SINGLE-SHELL TANK INTERIM STABILIZATION RECORD

S.L. SWANEY, BABCOCK SERVICES, INC., RICHLAND, WA. 99352
PO BOX 1500 For CH2M
Richland, WA 99352
U.S. Department of Energy Contract DE-AC27-99RL14047

EDT/ECN: DRF UC: N/A
Cost Center: 7G320 Charge Code: 501960
B&R Code: N/A Total Pages: 427

Key Words: INTERIM, STABILIZATION, RECORD, SINGLE-SHELL TANK, RETRIEVAL, DRAINABLE INTERSTITIAL LIQUID, DRAINABLE LIQUID REMAINING, SUPERNATANT, SALTWELL, JET PUMP, ADMINISTRATIVE, SUBMERSIBLE

Abstract: THIS DOCUMENT LISTS ALL SINGLE-SHELL TANKS THAT HAVE BEEN LISTED AS INTERIM STABILIZED OVER THE LIFE OF THE SALTWELL PROJECT SPANNING THE FISCAL YEARS 1978 TO 2005. 147 SINGLE-SHELL TANKS HAVE BEEN DECLARED INTERIM STABILIZED BY VARYING MEANS INCLUDING: ADMINISTRATIVELY, SUBMERSIBLE PUMP, JET PUMP, AND RETRIEVAL PUMPING.

TRADEMARK DISCLAIMER. Reference herein to any specific commercial product, process, or service by trade name, trademark, manufacturer, or otherwise, does not necessarily constitute or imply its endorsement, recommendation, or favoring by the United States Government or any agency thereof or its contractors or subcontractors.

Printed in the United States of America. To obtain copies of this document, contact: Document Control Services, P.O. Box 950, Mailstop H6-08, Richland WA 99352, Phone (509) 372-2420; Fax (509) 376-4989.

JUL 26 2005
DATE:
STA: 3
HANFORD RELEASE
ID 18

Barbara Wolski 7/6/05
Release Approval Date Release Stamp

Approved For Public Release

RECORD OF REVISION

(1) Document Number: HNF-SD-RE-TI-178

(2) Title: Shell-Tank Interim Stabiliztion Record

Change Control Record

(3) Revision	(4) Description of Change - Replace, Add, and Delete Pages	Authorized for Release	
		(5) Cog. Engr.	(6) Cog. Mgr. Date
	(7)		
1	Complete revision to document in accordance with ECN 106858.	V.C. Boyles	
2	Complete revision to document in accordance with ECN 106864.	V.C. Boyles	
3	Complete revision to document in accordance with ECN 171773.	S. L. Swaney	
4	Complete revision to document in accordance with ECN 602442.	V.C. Boyles	
5	Complete revision to document in accordance with ECN 625446.	S. L. Swaney	
6	Complete revision to document in accordance with ECN 631355.	J. S. Boettger	
7	Complete revision to document in accordance with ECN 661723.	S. L. Swaney	
8	Complete revision to document in accordance with ECN 674731.	S. L. Swaney	
RS 9	Complete revision to document in accordance with Document Release Form (A-6003-881)	S. L. Swaney	D.G. Baide 7-5-05

SINGLE-SHELL TANK INTERIM

STABILIZATION RECORD

S.L. SWANEY
BABCOCK SERVICES

RETRIEVAL/CLOSURE SYSTEM ENGINEERING

Prepared for the United State Department of Energy
CH2M Hill Hanford Group, Inc.
P.O. Box 1500
Richland, Washington 99352

TABLE OF CONTENTS

1.0 Introduction..... 1

2.0 Stabilization Summary by Fiscal Year..... 2

3.0 Interim Stabilization Index..... 5

THIS PAGE INTENTIONALLY LEFT BLANK

1.0 INTRODUCTION

Single-wall underground storage tanks (SWT), now referred to as single-shell tanks (SST) and their supporting waste treatment and transfer facilities, were used for the storage of radioactive wastes produced by Hanford plants for nearly forty years. Active use of the SSTs was phased out completely by November 1980. The first step toward final disposal of the waste in the SSTs is Interim Stabilization.

The stabilization program is intended to reduce the liquid content of wastes to the greatest extent technically and economically feasible in order to minimize risk associated with loss of tank integrity and exposure of the contents to the general environment. The first SSTs were stabilized in 1978. The first jet pump was started up in BY-107 in 1975.

To be stabilized a tank must contain less than 50,000 gallons of drainable interstitial liquid and less than 5,000 gallons of supernate liquid. Stabilization can be achieved by one of three ways. The SST can be jet pumped to remove DIL, supernate pumped (via submersible or retrieval pumping), or administratively stabilized.

The stabilization record is intended to record the annual progress made in the stabilization process. The last remaining tank to be declared interim stabilized is 241-S-102. Currently, the tank is undergoing full retrieval operations and may or may not be declared interim stabilized based on the requirements of the Consent Decree between the Department of Ecology, Department of Energy, and Washington State. This document will be updated as necessary.

Further information on waste tank inventories of tanks that have been declared interim stabilized can be obtained from document RPP-5556, current revision.

2.0 STABILIZATION SUMMARY BY FISCAL YEAR

Stabilization Record

The record is summarized by fiscal year and stabilization method:
Administrative (AR), Supernate (SN), and Saltwell (Jet).

Summary per Fiscal Year	METHOD OF STABILIZATION			
Year (FY) Stabilized	AR	SN	JET	YEAR TOTAL
78	3	0	0	3
79	15	5	1	21
80	2	0	0	2
81	11	2	0	13
82	4	0	0	4
83	0	0	18	18
84	9	1	2	12
85	6	10	4	20
86	0	0	0	0
87	2	0	0	2
88	0	2	1	3
89	1	2	0	3
90	1	0	3	4
91	0	0	0	0
92	0	0	0	0
93	0	1	0	1
94	0	0	0	0
95	1	1	6	8
96	0	0	2	2
97	0	0	2	2
98	0	0	1	1
99	0	0	0	0
2000	0	0	6	6
2001	0	0	4	4
2002	0	0	3	3
2003	0	0	5	5
2004	0	0	7	7
2005	0	1	2	3
TOTALS	55	25	67	147

FY	TANK STABILIZED
78	A-104, BX-101, SX-115
79	A-105, BX-102, BX-108, BY-107, SX-108, SX-110, SX-111, SX-112, SX-113, SX-114, T-108, TX-104, TY-102, TY-106, U-101, U-104, U-112, U-201, U-202, U-203, U-204
80	SX-107, TX-107
81	AX-104, B-101, B-201, BX-105, C-202, SX-109, T-102, T-106, T-112, T-201, T-202, T-203, T-204
82	A-106, C-201, C-203, C-204
83	TX-102, TX-103, TX-105, TX-106, TX-108, TX-109, TX-110, TX-111, TX-112, TX-113, TX-114, TX-115, TX-116, TX-117, TX-118, TY-101, TY-103, TY-105
84	B-203, B-204, BX-103, BY-101, BY-112, C-101, C-108, C-109, C-111, T-103, TX-101, TY-104
85	B-102, B-103, B-104,B-105, B-106, B-107, B-108, B-109, B-110, B-111, B-112, B-202, BX-110, BY-104, BY-108, BY-110, BY-111, S-104, T-109, U-110
86	NONE
87	AX-103, T-105
88	A-103, AX-102, S-105
89	A-102, BX-104, C-104
90	BX-107, BX-109, BX-112, C-112
91	NONE
92	NONE
93	T-101
94	NONE
95	BX-106, BX-111, BY-102, C-102, C-105, C-107, C-110, T-111
96	S-110, T-107

FY	TANK STABILIZED
97	BY-109, S-108
98	BY-103
99	NONE
2000	S-103, SX-104, SX-106, T-104, T-110, U-103
2001	S-106, S-109, U-105, U-106
2002	SX-105, U-102, U-109
2003	BY-105, C-103, SX-101, SX-103, U-111
2004	A-101, AX-101, S-101, S-107, SX-102, U-107, U-108
2005	BY-106, S-111, S-112

3.0 INTERIM STABILIZATION INDEX

TANK NO	PAGE NO	STAB MTHD	DATE STAB		TANK NO	PAGE NO	STAB MTHD	DATE STAB
A-101	7	JET	Jun-04		BY-110	125	JET	Jan-85
A-102	13	SN	Aug-89		BY-111	127	JET	Jan-85
A-103	15	SN	Jun-88		BY-112	129	JET	Jun-84
A-104(1)	19	AR	Sep-78		C-101	131	AR	Nov-83
A-105	20	AR	Jul-79		C-102(2)	133	JET	Sep-95
A-106	21	AR	Aug-82		C-103(2)	139	JET	Jul-03
AX-101	22	JET	Dec-03		C-104	147	AR	Sep-89
AX-102	28	SN	Sep-88		C-105	149	AR	Oct-95
AX-103	30	AR	Aug-87		C-106(6)	--	N/A	N/A
AX-104	32	AR	Aug-81		C-107(2)	151	JET	Aug-95
B-101(3)	33	SN	Mar-81 (Jul-91)		C-108	158	AR	Mar-84
B-102	35	SN	Aug-85		C-109	160	AR	Nov-83
B-103	37	SN	Feb-85		C-110	162	JET	Jun-95
B-104	39	SN	Jun-85		C-111	167	SN	Mar-84
B-105	41	AR	Dec-84		C-112	168	AR	Sep-90
B-106	43	SN	Mar-85		C-201	170	AR	Mar-82
B-107	45	SN	Mar-85		C-202	171	AR	Aug-81
B-108	47	SN	May-85		C-203	172	AR	Mar-82
B-109	49	SN	Apr-85		C-204	173	AR	Sep-82
B-110	51	AR	Dec-84		S-101	174	JET	Apr-04
B-111	53	SN	Jun-85		S-102	--	--	--
B-112	55	SN	May-85		S-103	180	JET	Mar-00
B-201(1)	--	AR	Aug-81		S-104	183	AR	Dec-84
B-202	57	AR	May-85		S-105(2,4)	185	JET	Aug-78 (Sep-88)
B-203	59	AR	Jun-84		S-106	187	JET	Feb-01
B-204	61	AR	Jun-84		S-107(2)	191	JET	Feb-04
BX-101(1)	63	AR	Sep-78		S-108	199	JET	Dec-96
BX-102	64	AR	Nov-78		S-109	204	JET	Jun-01
BX-103	66	AR	Nov-83		S-110(2)	208	JET	Jan-97
BX-104	69	SN	Sep-89		S-111(2)	215	JET	May-05
BX-105	71	SN	Sep-86		S-112(5)	224	SN	Jun-05
BX-106	74	SN	Aug-95		SX-101	231	JET	Aug-03
BX-107	76	JET	Sep-90		SX-102(2)	237	JET	Jul-04
BX-108	78	SN	Jul-79		SX-103	247	JET	May-03
BX-109	79	JET	Sep-90		SX-104(2)	254	JET	Apr-00
BX-110	81	SN	Aug-85		SX-105	260	JET	Aug-02
BX-111(2)	83	JET	Mar-95		SX-106	264	JET	May-00
BX-112	87	JET	Sep-90		SX-107	268	AR	Oct-79
BY-101	89	JET	May-84		SX-108	269	AR	Aug-79
BY-102	91	JET	Apr-95		SX-109(3)	270	AR	May-81 (Jan-92)
BY-103(2)	94	JET	Nov-97		SX-110	273	AR	Aug-79
BY-104	101	JET	Jan-85		SX-111	274	SN	Jul-79
BY-105	103	JET	Mar-03		SX-112	275	AR	Jul-79
BY-106	110	JET	Jun-05		SX-113	277	AR	Nov-78
BY-107	117	JET	Jul-79		SX-114	279	AR	Jul-79
BY-108(2)	118	JET	Feb-85		SX-115(1)	280	AR	Sep-78
BY-109(2)	120	JET	Jun-97					

TANK NO	PAGE NO	STAB MTHD	DATE STAB		TANK NO	PAGE NO	STAB MTHD	DATE STAB
T-101	281	SN	Apr-93		TX-113(2)	342	JET	Apr-83
T-102(1)	--	AR	Mar-81		TX-114(2)	344	JET	Apr-83
T-103	284	AR	Nov-83		TX-115	346	JET	Sep-83
T-104	287	JET	Nov-99		TX-116	348	JET	Apr-83
T-105	290	AR	Jun-87		TX-117(2)	350	JET	Mar-83
T-106	293	AR	Aug-81		TX-118(2)	352	JET	Apr-83
T-107	294	JET	May-96		TY-101	354	JET	Apr-83
T-108	301	AR	Nov-78		TY-102(3)	356	AR	Sep-79 (Apr-84)
T-109	303	AR	Dec-84		TY-103(2)	358	JET	Mar-83
T-110(2)	305	JET	Jan-00		TY-104	360	AR	Nov-83
T-111	310	JET	Feb-95		TY-105	362	JET	Mar-83
T-112(1)	--	AR	Mar-81		TY-106	364	AR	Nov-78
T-201(1)	--	AR	Apr-81		U-101	366	AR	Sep-79
T-202	313	AR	Aug-81		U-102	368	JET	Jun-02
T-203(3)	314	AR	Apr-81 (Jul-91)		U-103	373	JET	Aug-00
T-204	316	AR	Aug-81		U-104	377	AR	Nov-78
TX-101	317	AR	Feb-84		U-105(2)	378	JET	Mar-01
TX-102(2)	319	JET	Apr-83		U-106	382	JET	Mar-01
TX-103(2)	321	JET	Aug-83		U-107	386	JET	Dec-03
TX-104(3)	323	SN	Sep-79 (Apr-84)		U-108(2)	393	JET	Aug-04
TX-105	325	JET	Sep-83		U-109	402	JET	Apr-02
TX-106(2)	327	JET	Jun-83		U-110	406	AR	Dec-84
TX-107(3)	329	AR	Oct-79 (Jan-84)		U-111(2)	408	JET	Jun-03
TX-108(2)	332	JET	Mar-83		U-112(3)	416	AR	Sep-79 (Feb-84)
TX-109(2)	334	JET	Apr-83		U-201	418	AR	Aug-79
TX-110	336	JET	Apr-83		U-202	419	SN	Aug-79
TX-111	338	JET	Apr-83		U-203	420	AR	Aug-79
TX-112(2)	340	JET	Apr-83		U-204	421	SN	Aug-79
	342							
	344							

(1) Stabilization evaluation data missing.
(2) Stabilized due to major equipment failure.
(3) Date in parentheses is date that Interim Stabilization documentation was completed.
(4) This tank was originally jet pumped in 1978, but not declared stabilized until 1988.
(5) This tank was originally jet pumped in 2000, but was only declared stabilized after retrieval was completed.
(6) This tank was never saltwell pumped, it went directly to retrieval.

Single-Shell Tank Interim Stabilization Evaluation Form

TANK: **241-A-101**

(Jet Pumping only) Reason for stopping jet pumping:

[x] Meets 0.05 gpm criteria, Date of Shutdown 08/28/03

[ ] Major equipment failure, Date of Shutdown _____

Tank Waste Surface Level Condition and Comments: SEE DESCRIPTION PAGE 2

Evaluation: (See continuation page for calculations and additional comments)

Photo/video review completed - Date of most recent photo/video 09/05/03

[x] Tank history, temperature profile and intrusion reviews completed and no anomalies identified

Starting Liquid Level 344.0" Method ENRAF Date 05/06/00
Final liquid level 87.5" Method Dip Tubes Date 08/28/03
Total Net Pumped Volume 542.3 Kgal
Capillary Height Used in Calculation 0"
Final Solids Volume 319.7 Kgal
Final Average flow rate 0.00 gpm
Porosity 0.17 and 0.153 (assumed)
Supernatant Volume Remaining 35 gal
Drainable Interstitial Liquid 37.0 Kgal
Drainable Liquid Remaining 37.0 Kgal
Pumpable Liquid Remaining 0.0 Kgal

[ ] Justification letter attached (Interim Stabilization System Engineer):

Disposition of Tank:

[x] Tank Interim Stabilized
[ ] Tank Not Interim Stabilized; Re-start Pumping

Evaluation prepared by Retrieval/Closure System Engineer: S.L. Swaney Date 6/17/2004

Closure Projects Engineering Support Process Engineer: WB Barton Date 6/17/2004

APPROVED BY:

Manager, Retrieval/Closure System Engineering MJ Stey Date 6/17/04

Manager, Closure Projects Engineering Support Date 6/17/2004

Single-Shell Tank Interim Stabilization Evaluation Form (cont.)

EVALUATION CALCULATIONS AND COMMENTS:

TANK: **241-A-101**

OBJECTIVE/PURPOSE:

This Single-Shell Tank Interim Stabilization Evaluation provides the data and supporting calculations involved in declaring single-shell waste storage tank 241-A-101 interim stabilized. The criteria to declare 100-series jet-pumped single-shell waste storage tanks to be interim stabilized are: 1) the tank contains less than 50,000 gallons of drainable interstitial liquid (DIL), 2) the tank contains less than 5,000 gallons of supernatant, and 3) the measured maximum pump-out or in-flow rate is less than 0.05 gallons per minute. In the event of major equipment failure, Criteria 3 may be waived with a letter of justification and management approval.

ANALYSIS METHOD:

The analysis method used for this evaluation relied upon the criteria and equations established in HNF-2978, Rev. 5, *Updated Pumpable Liquid Volume Estimates and Jet Pump Durations for Interim Stabilization of Remaining Single-Shell Tanks*. Calculations utilize flow rates, supernatant volumes and interstitial liquid volumes evaluated in RPP-18551, Rev. 0, *Tank 241-A-101 Interim Stabilization Pumpability Assessment*. The pumpability assessment evaluates waste volume, non-pumpable regions, waste porosities, and other considerations to determine the values used in this report.

This evaluation follows the applicable guidelines of TFC-ENG-DESIGN-C-10, Rev. A-5, *Engineering Calculations* and the technical basis and formatting requirements of TFC-ENG-CHEM-P-15, Rev. A-1 *Single-Shell Tank Interim Stabilization Evaluation*. When complete, this evaluation will be formally released as part of a direct revision to HNF-SD-RE-TI-178, *Single-Shell Tank Leak Stabilization Record*.

TANK WASTE DESCRIPTION:

The following description was obtained by in-tank video taken 09/05/03. Saltwell pumping yielded 542.3 Kgal of net waste from 241-A-101, while using 8.7 Kgal of water for pump flushes and 412.9 Kgal of water for dilution. The waste of 241-A-101 appears as a flat, dark, sludge type waste with an irregular surface with white clumps of a saltcake type material. Also visible are cracks in the waste surface that were created as the waste was dried out by saltwell pumping. There is a large depression in the center of the tank as evidenced by a shallow pool around the saltwell screen. The waste surface is dry except for this small pool. The surface of this pool (~12.0 foot diameter) is contained within a large depression (~40 foot diameter) in the waste surface. The supernatant (ILL) is visible during the video examination due to the camera positioning near the waste feature. The ENRAF plummet was not visible during video observation. It is located 28.5 feet from the tank wall (9 feet from the tank center) and reads 129.8 inches. The waste surface at the tank side walls shows 6 exposed wall rings. This is generally consistent with the waste level measured at the ENRAF. The second wall ring from the top is covered with white saltcake material indicating the initial level of the waste prior to the initiation of saltwell pumping.

Currently, liquid observation well (LOW) readings indicate an ILL of 127.9 inches. ENRAF readings indicate the surface level is 128.5 inches. RPP-18551 Rev. 0 evaluates these readings and determines the tank drainable interstitial liquid, drainable liquid remaining, pumpable liquid remaining, tank waste solids, and supernatant volumes used in this report.

Evaluation Prepared by _____ Date 6/17/2004

Evaluation Checked by Wm. Blaine Barton Date 6/17/2004

Single-Shell Tank Interim Stabilization Evaluation Form (cont.)

EVALUATION CALCULATIONS AND COMMENTS:

TANK: **241-A-101**

INPUT DATA & ASSUMPTIONS

Initial Liquid Level at Start of Pumping (ENRAF – 05/06/00) = 344.02 inches ~ 344.0 inches

Final ENRAF Reading (06/17/04) = 128.45 inches ~ 128.5 inches

Final Liquid Observation Well (LOW) Reading (06/17/04) = 127.85 inches ~ 127.9 inches

Final Corrected Dip Tube Reading in August 2003 = 87.5 inches ~ 87.5 inches**

Divergence point = LOW & ENRAF Levels vs. time diverge (supernatant liquid is exhausted)

The unusual waste characteristics of A-101 yielded no divergence between LOW & ENRAF level readings during the pumping campaign.

Net Waste Pumped since divergence = N/A

Net Waste Pumped (data through 08/29/03 on \\AP012\DPU) = 542,334 gal = 542.3 Kgallons

Capillary Height = 0 inches ** (accounted for in final corrected dip tube readings)

Sludge Volume = 2,906 gallons ****

Height of Sludge Layer (2.9 Kgal) above bottom ~ 1.1 inches ***

Tank Dish Volume = 0 gallons (tank is flat bottomed per H-2-55911)

Supernatant Volume = 35 gallons **

Assumed Saltcake Porosity = 15.3% **

Assumed Sludge Porosity = 17% *

For 100-series (75' dia.) tanks (500, 750, and 1000K gallon SSTs), 1 inch equals 2750 gallons*

EQUATIONS

D.I.L. = Drainable Interstitial Liquid **
= 37.0 Kgal

D.L.R. = Drainable Liquid Remaining *
= D.I.L. + supernatant volume

P.L.R. = Pumpable Liquid Remaining **
= 0.0 Kgal

*Reference HNF-2978, Rev. 5
**Reference RPP-18551, Rev. 0
***Reference HNF-13019, Rev. 0
****Twins Database query 05/13/04

Evaluation Prepared by _____ Date 6/17/2004

Evaluation Checked by W B Barton Date 6/17/2004

Single-Shell Tank Interim Stabilization Evaluation Form (cont.)

EVALUATION CALCULATIONS AND COMMENTS:

TANK: **241-A-101**

RESULTS/CALCULATIONS

DIP TUBE BASIS:

DIL = 37.0 Kgal (per RPP-18551, Rev. 0)

DLR = DIL + Supernatant = 37.0 Kgal + 35 gallons = 37,035 gallons (37.0 Kgal)

PLR = 0 Kgal (per RPP-18551, Rev. 0).

SOLIDS VOLUME:

The following description was obtained by review of the in-tank video taken 09/05/03. All estimates regarding waste dimensions were obtained by comparison with known dimensions of installed in-tank equipment.and drawing H-2-55911, Sht. 1, Rev. 1. The ENRAF level during the video was 129.8 inches. The waste appears to be fairly level over the full diameter of the tank, except for a large depression in the region of the saltwell screen. The depression forms a void space, assumed to be a right circular cone with a diameter of 40 feet and an overall depth of approximately 100 inches. A supernatant pool approximately 12 feet in diameter is visible in the video. Based on dip tubes levels, this level is approximately 101.6 inches. For the purposes of this evaluation, liquid waste and supernatant volumes are taken from RPP-18551 Rev. 0.

Per HNF-2978, Rev. 5 and Best Basis Inventory (BBI) located in the TWINS database; the sludge volume of 241-A-101 is 2.9 Kgal. For reporting purposes, the total quantity of solids in the tank will be calculated and the sludge volume will be subtracted from this total. This volume difference will then be the reported quantity of saltcake in 241-A-101. For this calculation the saltcake and sludge solids volumes include the interstitial liquid but do not include any supernatant liquid.

For the purpose of this evaluation, the solids volume will include an evaluation of the upper saltcake surface (subtracting the cone shaped depression) and the lower sludge volume. See SOLIDS CALCULATION FIGURE. These volumes are then added together to obtain the total volume as follows:

SOLIDS CALCULATION FIGURE (not to scale)

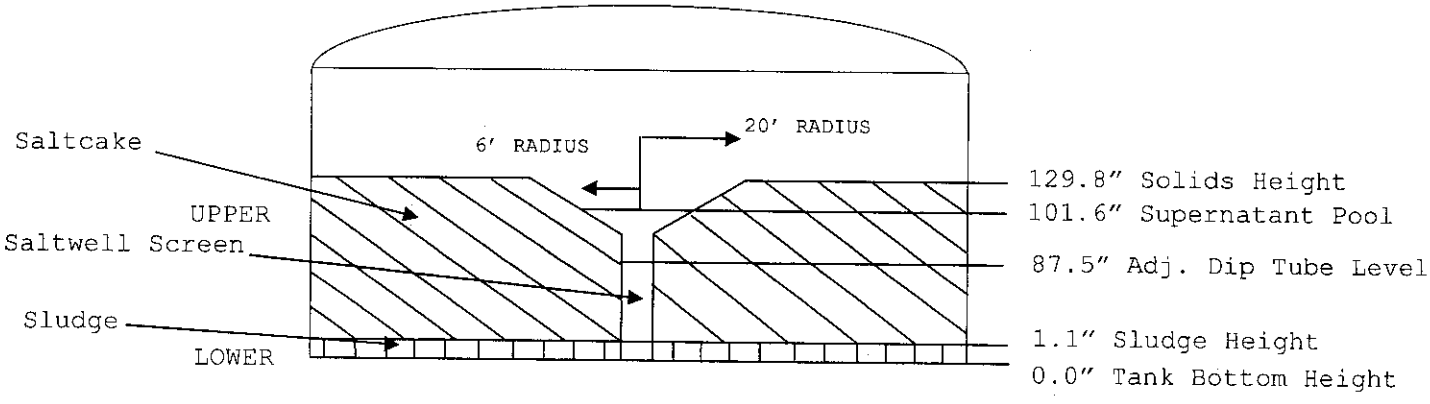

Evaluation Prepared by _____ Date 6/17/2004

Evaluation Checked by Wm Blaine Barton Date 6/17/04

Single-Shell Tank Interim Stabilization Evaluation Form (cont.)

EVALUATION CALCULATIONS AND COMMENTS:

TANK: **241-A-101**

RESULTS/CALCULATIONS (cont.)

SOLIDS VOLUME (cont):

Volume = [Vol. (129.8"–1.1")* 2750 gal/in] +Vol. of 1.1" (Sludge Volume)] – Vol. (right circ. cone)

(Where right circular cone vol. is = (pi * H/3 * $r^{\wedge 2}$) * 7.481 gal/$ft^{\wedge 3}$ = 38,000 gallons (per RPP-18851)

NOTE: The waste depression bottom is assumed to be the sludge height of 1.1 inches.

= 354,805 + 2,906 – 38,000 = 319,711 gallons

Volume (Supernatant) = 35.0 gallons (per RPP-18851).

Volume (Tot) gallons = 319,711 + 35.0 = 319,746 gallons = 319.7 Kgal

Solids Volume Remaining = Volume (Tot) – Supernatant Volume

= 319,746 gallons – 35.0 gallons = 319,711 gallons = 319.7 Kgal

Saltcake Volume remaining = Solids Volume Remaining – Sludge Volume

= 319,711 gallons – 2,906 gallons = 316,840 gallons = 316.8 Kgal

NOTE: The small difference for Volume (Tot) gallons between this report (319.7Kgal) and the final stated volume of RPP-18851 (318 Kgal) is due to use of HNF-13019 (Tank volume calculator) and general accuracies due to rounding of calculated values.

FLOW DATA:

Data obtained from operating procedure TO-210-200 in the last weeks of pumping campaign show that the saltwell pump was unable to remove the flush water used for priming prior to being starved of suction, thus yielding a net effective pumping rate of less than zero. The results of RPP-18551 Rev. 0 determined the final pump flow rate to be 0.00 gpm.

SOFTWARE: None.

Evaluation Prepared by _____ Date 6/17/2004

Evaluation Checked by _____ Date 6/17/04

Single-Shell Tank Interim Stabilization Evaluation Form (cont.)

EVALUATION CALCULATIONS AND COMMENTS:

TANK: **241-A-101**

REFERENCES:

TO-210-200, *Perform 241-A-101 Saltwell Pumping.*

H-2-55911, Sht. 1, Rev. 1 *Waste Storage Tanks Composite Section.*

HNF-2978, Rev. 5, *Updated Pumpable Liquid Volume Estimates and Jet Pump Durations for Interim Stabilization of Remaining Single-Shell Tanks.*

RPP-18551, Rev. 0, *Tank 241-A-101 Interim Stabilization Pumpability Assessment*

TFC-ENG-DESIGN-C-10, REV A-5, *Engineering Calculations.*

TFC-ENG-CHEM-P-15, Rev. A-1, *Single-Shell Tank Interim Stabilization Evaluation* procedure.

HNF-SD-RE-TI-178, Rev. 8, *Single-Shell Tank Leak Stabilization Record.*

Tank Waste Information System (TWINS) 2004, *queried May 14*, 2004, [posted Tank Integrity Reports], Hanford intranet at http://twinswhse.pnl.gov/

Pumpchrts_PE.xls, Excel log of saltwell pumping history from server \\ap012\dpu\pumpchartsPE.

CONCLUSIONS/RECOMMENDATIONS:

241-A-101 has met the criteria for declaration of interim stabilization. See Page 1 for summary and final tank disposition and approvals.

ATTACHMENTS:

All record attachments, raw data, and calculations for this evaluation, as well as other information may be found in the tank history file maintained by Interim Stabilization Engineering, per the requirements TFC-ENG-CHEM-P-15, section 4.2.19.

Evaluation Prepared by _____ Date 6/17/2004

Evaluation Checked by _____ Date 6/17/04

STABILIZATION EVALUATION
NON-JET PUMPED TANKS

Tank: 241-A-102

Evaluation (See continuation page for calculations and additional comments):

[XX] Photograph review completed - Date of most recent photographs 7-20-89

[XX] Tank history review completed

[XX] Tank temperature profile review completed

Surface Description: Mottled light and dark solids cover surface of waste in a broken pattern. Many pieces of crust are tilted, with angular shapes. Fifteen to twenty percent of tank surface is composed of liquid supernatant pools covering solids. Pump and FIC plummet are visible. Date 7-20-89

Pools are seven to eight inches deep.

Solids Level 15.0 inches * Date 7-27-89 Method Photo of FIC contacting solids

Liquid Level less then 15 in Date 7-27-89 Method Photos (pump is visible)

Solids Volume 36,850 gallons

Drainable Liquid Remaining

~~Estimated Drainable Liquid Volume~~ 6,100 gallons

Average Maximum Tank Temperature, past 6 months 90°F

Estimated Supernatant Volume 4,400 gallons

[ ] Cost/Benefit Analysis attached

Evaluation Performed by D. WIGGINS Date 8/18/89 Checked by [signature] Date 8/21/89

Disposition of Tank:

[XX] Tank Interim Stabilized at 6,100 gallons of drainable liquid

[ ] Tank not Interim Stabilized; stabilization activities resumed

Approved by: Manager, WMPE** [signature] Date 8-24-89

Manager, TFS&O [signature] Date 8-28-89

Program Manager [signature] Date 8-25-89

DISTRIBUTION: WMPE Tank File, Tank Farm Surveillance Analysis, Approval Signatures

*The 15-inch solids level used above is a nominal measurement taken on 7-27-89.
**Due to the reorganization of November 1988, the function of Manager, WMPE has been tranferred to Manager, Single-Shell Tanks (SST).

EVALUATION CALCULATIONS AND COMMENTS

Tank: 241-A-102 **Page** 2 **of** 2

The submersible pump is resting on solid surface at the time the photographs were taken within the tank. Approximately seven to eight inches of submersible pump is not visible, as this part appears under liquid in the in-tank photos. Single-Shell Tank Process Engineering knows that there are pools of liquid in this tank, but at present it is unpumpable.

The quantity of supernatant liquid (using a submersible pump) removed from this tank in July, 1989, totalled 39,500 gallons.

The following results are considered conservative. Tank 241-A-102 is a flat-bottomed tank. One inch of waste in this tank equals 2,750 gallons.

1. Volume Calculations

   A. Supernatant Volume

   (2750 gallons/inch)(8 inches)(20% of tank surface) = 4,400 gallons

   B. Solids Volume = Total Waste - Supernatant

   (15 inches)(2750 gallons/inch) = Total Waste = 41,250 gallons

   41,250 gallons - 4,400 gallons = 36,850 gallons

2. Interstitial Liquids

   Porosity = 45% Capilliary height = 12 inches

   Drainable Interstitial Liquid (DIL) =

   [36,850 - (12 inches)(2750 gallons/inch)] 0.45 = 17~~00~~ 32 gallons D.D.W. RTK 8/24/89

   Drainable Liquid Remaining (DLR) = DIL + Supernatant

   17~~00~~ 32 gallons + 4400 gallons = 61~~00~~ 32 gallons D.D.W. RTK 8/24/89 (ROUNDED DOWN TO 6100 GALLONS ON PAGE 1 of 2.) DDW

   Pumpable Liquid Remaining (PLR) = DLR - (amount of liquid contained in 18 inches of solids, expressed in gallons)

This volume figure is not applicable to this tank stabilization due to the fact that less than 18 inches of solids remains in tank 241-A-102.

Calculations made by: Dirk D. Wiggins 8/18/89

Checked by: RTRamar 8/24/89

STABILIZATION EVALUATION
NON-JET PUMPED TANKS

Tank: 241-A-103

Evaluation (See continuation page for calculations and additional comments):

- [x] Photograph review completed - Date of most recent photographs 5-24-88
- [x] Tank history review completed
- [x] Tank temperature profile review completed

Surface Description: THE SURFACE IS SMOOTH LIGHT GRAY SLUDGE WITH POCKETS OF LIQUID. APPROXIMATELY 14% OF THE SURFACE IS LIQUID COVERED. Date 6-3-88

Solids Level 137.50 Date 5-24-88 Method F/C

Liquid Level _____ Date _____ Method _____

Solids Volume 366,000

Estimated Drainable Liquid Volume 12,000

Average Maximum Tank Temperature, past 6 months 122°F

Estimated Supernatant Volume 45,615

- [ ] Cost/Benefit Analysis attached

Evaluation Performed by _____ Date _____ Checked by _____ Date _____

Disposition of Tank:

- [x] Tank Interim Stabilized at 12,000* gallons of drainable liquid
- [ ] Tank not Interim Stabilized; stabilization activities resumed

Approved by: Manager, ~~WMPE~~ TFPE [signature] Date 6/7/88

Manager, TFS&O [signature] Date 6/29/88

Program Manager [signature] Date 6/22/88

DISTRIBUTION: WMPE Tank File, Tank Farm Surveillance Analysis, Approval Signatures

*FROM CORE SEGMENTS 3-9

EVALUATION CALCULATIONS AND COMMENTS

Tank: 241-A-103

Page 2 of 4

Tank 241-A-103 will be stabilized based on the core sample data taken during April 1986 and on photographs taken May 24, 1988.

Document SD-RE-TI-101 allows the use of core data to determine the remaining interstitial liquid. Two (2) core samples were obtained during April 1986 of the sludge in tank 241-A-103 and the results were published in document SD-RE-TI-198. The liquid content data of each core segment was taken from this document and the tank liquid volume was calculated. The results show very little liquid in the lower 150 inches of the tank with Sample #1 having 14,780 gallons and Sample #2 having 12,410 gallons. The higher value of 14,780 gallons will be used for the final estimated volume of interstitial liquid remaining. This evaluation is conservative because it assumes all the liquid pumped during the recent campaigns was supernatant and came from segments 1 and 2 of the samples. Actually, some of the pumped liquid would be interstitial and would further lower the liquid content of core segments 3 -10. See attached tables showing liquid calculations for segments 3-10 of Samples #1 and #2.

The tank was pumped starting in May 1987 from a measured height of 183.90 inches to 137.5 inches by May 24, 1988 and resulted in removal of 111,000 gallons of liquid. During the last two pumping campaigns four hot water flushes totalling 5,475 gallons were added to clear the salt well screen so pumping could continue. During this additional pumping, only 11,175 gallons of liquid was pumped and this included the flush water addition.

The amount of supernatant liquid remaining in the tank was determined from the May 24, 1988 photographs. A best engineering estimate indicates that 4,615 gallons of supernatant remains (14% of the total tank surface). Pool sizes were determined by comparing individual pools to the overall size of the tank and objects of known dimensions (i.e. salt well screen, piping, etc.) Individual depth was estimated at 3-18 inches and took in to account the ability to see through the liquid to the solids beneath.

Total estimated gallons of liquid remaining in the tank is 14,780 interstitial (based on the core sample data of sample #1) and 4,615 gallons of supernatant (based on the photograph analysis).

Calculations made by: VC Boyles

Checked by: Joel A Rack

EVALUATION CALCULATIONS AND COMMENTS

Tank: 241-A-103

Page 3 of 4

TANK 103-A
CORE SAMPLE #1
RISER R-17

CORE SEGMENT	SAMPLE HEIGHT	CORE LIQUID VOLUME	TOTAL VOLUME	PERCENT LIQUID	TANK LIQUID VOLUME
3	133"-152"	14 cc	244 cc	5.7%	2,980 gal
4	114"-133"	22 cc	244 cc	9.0%	4,700 gal
5	95"-114"	8 cc	244 cc	3.3%	1,725 gal
6	76"-95"	7 cc	244 cc	2.9%	1,515 gal
7	57"-76"	0 cc	244 cc	0.0%	0 gal
8	38"-57"	0 cc	244 cc	0.0%	0 gal
9	19"-38"	6 cc	244 cc	2.5%	1,300 gal
10	0"-19"	12 cc	244 cc	4.9%	2,560 gal
			TANK TOTAL VOLUME		14,780 gal

Calculations made by: VC Bigler

Checked by: Joel A Lock

EVALUATION CALCULATIONS AND COMMENTS

Tank: 241-A-103

Page 4 of 4

TANK 103-A
CORE SAMPLE #2
RISER R-12

CORE SEGMENT	SAMPLE HEIGHT	CORE LIQUID VOLUME	TOTAL VOLUME	PERCENT LIQUID	TANK LIQUID VOLUME
3	131"-150"	23 cc	244 cc	9.4%	4,910 gal
4	112"-131"	7 cc	244 cc	2.9%	1,515 gal
5	93"-112"	6 cc	244 cc	2.5%	1,300 gal
6	74"-93"	0 cc	244 cc	0.0%	0 gal
7	55"-74"	3 cc	244 cc	1.2%	625 gal
8	36"-55"	6 cc	244 cc	2.5%	1,300 gal
9	17"-36"	0 cc	244 cc	0.0%	0 gal
10	0"-17"	13 cc	219 cc	5.9%	2,760 gal
			TANK TOTAL VOLUME		12,410 gal

Calculations made by: VC Boyles

Checked by: Joel A Rock

October 2, 1978

TO: Distribution

FROM: J. W. Bailey
Tank Farm Process Engr'g
2750-E/200-East
Ext. 221

SUBJECT: Tank Status Update

Based on a Tank Farms Process Engineering evaluation of tank photographs and/or liquid and solids level data, the following listed tanks have changed status as indicated below. Future operations and reporting should reflect these status changes. The effective date for these changes is September 30, 1978.

TANK	PREVIOUS STATUS	NEW STATUS	EST. SUPERN. LIQ. (GAL.)
241-A-104	Leaker-Primary Stab.	Leaker-Interim Stab.	-0-
241-AX-104	Inactive	Inactive-Primary Stab.	-0-
241-B-102	Active	Inactive	19,000
241-BX-101	Inactive-Primary Stab.	Inactive-Interim Stab.	-0-
241-SX-103	Active	Inactive-Primary Stab.	-0-
241-SX-105	Active	Inactive-Primary Stab.	-0-
241-SX-115	Inactive-Primary Stab.	Inactive-Interim Stab.	-0-
241-TX-107	Inactive	Inactive-Primary Stab.	1,000*
241-TX-114	Inactive	Inactive-Primary Stab.	-0-
241-TX-117	Inactive	Inactive-Primary Stab.	-0-
241-Ty-105 ~~241-TX-105~~	Inactive	Inactive-Primary Stab.	-0-
241-U-105	Active	Inactive	23,000
241-U-201	Inactive	Inactive-Primary Stab.	1,000*
241-U-202	Inactive	Inactive-Primary Stab.	1,000*
241-U-203	Inactive	Inactive-Primary Stab.	1,000*
241-U-204	Inactive	Inactive-Primary Stab.	1,000*

* Liquid is nonpumpable

Documentation of the engineering evaluations supporting these status changes will be maintained on file at TFPE. For further details on these evaluations contact V. D. Maupin, ext. 217.

John W. Bailey

J. W. Bailey
Tank Farm Process Engr'g

JWB/rfh

Distribution:
C. R. Carter
G. T. Dukelow
J. H. Garbrick
R. B. Langley
C. A. Petersen
R. A. Zinsli

cc:
D. R. Autery
H. A. Anderson
J. W. Bailey
C. A. Mulvey
V. D. Maupin
G. A. Olsen
T. B. Veneziano
LB

INTERIM STABILIZATION EVALUATION

TANK NUMBER: 105-A EFFECTIVE DATE: 7-31-79

LIQUID LEVEL & RISER NO. N/A

SOLIDS LEVEL & RISER NO. 14" R_5

EST. SUPERNATE LIQUID VOLUME 0

EST. DRAINABLE INTERSTITIAL LIQUID VOLUME 4,100 gallons

TEMPERATURE: 125°F (In Tank)
221°F (In laterals)

IS THIS TEMPERATURE A PROBLEM?

yes ____ no X* unknown ____

* Tank's temperature is being maintained through the use of a portable exhauster. Air flow rates that have been used were above 550 cfm. No attempts were made to minimize flow rate due to exhauster interlook system limitations.

IS THERE A POTENTIAL DOME LOAD PROBLEM? yes ____ no X

PHOTOGRAPH EVALUATION: (Order #87080, LL 14 inches, Date 6-21-79)

The surface appears dry with the exception of a wet spot trailing away from a circulator The floor is approximately 40% bare metal, 30% a thin layer of sludge and the remaining 30% a heavier sludge primarily around the perimeter of the tank. The liner of the tank is almost free of scale except for a small ridge around the lower perimeter.

COMMENTS:

Tank's temperature is to be maintained below 200°F. Refer to RHO-CD-604, Tank 241-A-105 Stabilization Progress Report (soon to be issued), for further details on the stabilization of this tank. The manual tape touches down on a pile of old tapes and piping causing an erroneous reading.

Prepared By: Barry Carl

Reviewed By: John W Bailey 7-31-79

Interim Stabilization Evaluation

TANK NUMBER: TK-106-A

EFFECTIVE DATE: 8-31-82

LIQUID LEVEL & RISER NO. 45.5" FIC R-6

SOLIDS LEVEL & RISER NO. R-13 = 43" Avg. based on solids level and photos=46"

EST. SUPERNATE LIQUID VOLUME 0

EST. DRAINABLE INTERSTITIAL LIQUID VOLUME < 3500 gallons

TEMPERATURE: maximum 135°

IS HEAT LOAD A PROBLEM? YES X* NO ____ UNKNOWN ____

*The heat load on the tank will not present any problems as long as the tank is ventilated. The maximum temperature after the solids dry and with forced air cooling will be 250°F. Cooling will be via the 702-A Ventilation system or the Tank 241-A-105 exhauster.

Reference: Letter 65430-79-036, G. D. Campbell to J. W. Bailey, "Tank 106-A Transient Heat Transfer Analysis."

IS THERE A POTENTIAL DOME LOAD PROBLEM: YES ____ NO X

PHOTOGRAPH EVALUATION: (Photo Series 101055 4-7-82)

The photos show that the waste substance consists of solids of irregular configuration, but of relatively low profile. No liquid is visible. The tank was lanced on 7-15-82, and the results indicated wet and soft solids with no interior liquid zones.

COMMENTS: With the heat load present in this tank, further evaporation will occur in the months following interim stabilization. No jet pump will be installed in this tank.

Prepared By: [illegible] 8-24-82

Reviewed By: [illegible] 8-24-82

Single-Shell Tank Interim Stabilization Evaluation Form

TANK: **241-AX-101**

(Jet Pumping only) Reason for stopping jet pumping:

[x] Meets 0.05 gpm criteria, Date of Shutdown _____05/01/03_____

[ ] Major equipment failure, Date of Shutdown _____

Tank Waste Surface Level Condition and Comments: _____ SEE DESCRIPTION PAGE 2 _____

Evaluation: (See continuation page for calculations and additional comments)

Photo/video review completed - Date of most recent photo/video _____11/05/03_____

[x] Tank history, temperature profile and intrusion reviews completed and no anomalies identified

Starting Liquid Level ___ 278.3" _____ Method _____ENRAF_____ Date ___07/30/00___
Final liquid level _____ 66.4" _____ Method _____Dip Tubes_____ Date ___10/08/03___
Total Net Pumped Volume ____369.1 Kgal____
Capillary Height Used in Calculation ___0"____
Final Solids Volume _____357.5 Kgal_____
Final Average flow rate _____0.029 gpm____
Calculated Porosity ____N/A (assumed saltcake porosity = 0.24) ____
Supernatant Volume Remaining ____ 0 gal ___
Drainable Interstitial Liquid _____43.6 Kgal____
Drainable Liquid Remaining ____43.6 Kgal____
Pumpable Liquid Remaining ____31.9 Kgal____

[ ] Justification letter attached (Interim Stabilization System Engineer):

Disposition of Tank:

[x] Tank Interim Stabilized
[ ] Tank Not Interim Stabilized; Re-start Pumping

Evaluation prepared by Retrieval/Closure System Engineer: SL Swanney Date 12/11/2K3

Closure Projects Engineering Support Process Engineer: JL Cowin Date 12/11/2003

APPROVED BY:

Manager, Retrieval/Closure System Engineering MJ SUTRY Date 12/11/03

Manager, Closure Projects Engineering Support M.R. KOCH Date 12/11/03

Single-Shell Tank Interim Stabilization Evaluation Form (cont.)

EVALUATION CALCULATIONS AND COMMENTS:

TANK: **241-AX-101**

OBJECTIVE/PURPOSE:

This Single-Shell Tank Interim Stabilization Evaluation provides the data and supporting calculations involved in declaring single-shell waste storage tank 241-AX-101 interim stabilized. The criteria to declare 100-series jet-pumped single-shell waste storage tanks to be interim stabilized for interim stabilization are: 1) the tank contains less than 50,000 gallons of drainable interstitial liquid (DIL), 2) the tank contains less than 5,000 gallons of supernatant, and 3) the measured maximum pump-out or in-flow rate is less than 0.05 gallons per minute. In the event of major equipment failure, Criteria 3 may be waived with a letter of justification and management approval.

ANALYSIS METHOD:

The analysis method used for this evaluation relied upon the criteria and equations established in HNF-2978, Rev. 5, *Updated Pumpable Liquid Volume Estimates and Jet Pump Durations for Interim Stabilization of Remaining Single-Shell Tanks*. Calculations presented will utilize the Dip Tube basis method presented in RPP-5556, Rev. 0, *Updated Drainable Interstitial Liquid Volume Estimates for 119 Single-Shell Tanks Declared Stabilized*. For dip tube basis calculations, this method assumes a zero inch height of capillary liquid retention in the solid waste matrix, as the dip tubes are not in direct contact with the solid waste volume of the tank. See the **Calculations** section for equation definitions.

This evaluation follows the applicable guidelines of the *Engineering Calculations* procedure, TFC-ENG-DESIGN-C-10, REV A, and the technical basis and formatting requirements of *Single-Shell Tank Interim Stabilization Evaluation* procedure, TFC-ENG-CHEM-P-15, Rev. A-1. When complete, this evaluation will be formally released as part of a direct revision to HNF-SD-RE-TI-178, *Single-Shell Tank Leak Stabilization Record*.

TANK WASTE DESCRIPTION:

The following description was obtained by in-tank video taken 11/05/03. The surface of 241-AX-101 is a dry flaky, crystalline, yellowish-white saltcake waste with a fairly uniform surface of large cracks that were created as the surface was dried out by saltwell pumping. Saltwell pumping yielded 369,094 gallons of net waste from 241-AX-101, while using 11,906 gallons of water for pump flushes, 18,510 gallons of water for transfer line flushes and 353,807 gallons of water for dilution. The waste surface appears to be dry and shows no standing water within the tank. A slight depression around the saltwell screen and vicinity shows no evidence of supernatant liquid. The ENRAF plummet is located 5 feet from the tank wall and reads approximately 130.0 inches. The tank waste is essentially flat until reaching the depression around the saltwell screen. The depression size (diameter/depth) cannot be determined as numerous air lift circulators (ALCs) block portions of the viewable depression area.

Currently, ENRAF readings indicate the surface level is 130.0 inches. Liquid observation well (LOW) gamma source readings indicate an ILL of 0.0 inches. LOW readings utilizing a neutron source indicate an ILL of 130.2 inches. Both readings are suspect as the actual liquid level, via dip tubes, lies between the two readings. Dip tube readings are obtained weekly by work package WS-03-0299. The current (10/08/03) dip tube level adjusted for the dip tube offset of 7.0 inches and assuming a zero inch capillary height, is 66.4 inches. All reported levels are based on the centerline of the tank's dished bottom. Calculations do not take into account any retained gas within the waste.

Evaluation Prepared by _____ Date 12/11/2003

Evaluation Checked by _____ Date 12/11/03

Single-Shell Tank Interim Stabilization Evaluation Form (cont.)

EVALUATION CALCULATIONS AND COMMENTS:

TANK: **241-AX-101**

INPUT DATA & ASSUMPTIONS

Final Dip Tube Reading from WS-03-0299 (10/08/03) = 59.4 inches ~ 59.4 inches

Dip Tube Offset (Distance of lowest dip tube leg from tank bottom) = 7.0 inches

Final Adjusted Dip Tube Level = 59.4 inches + 7.0 inches = 66.4 inches ~ 66.4 inches

Final ENRAF Reading (12/03/03) = 129.97 inches ~ 130.0 inches

Initial Liquid Level at Start of Pumping (ENRAF – 07/29/00) = 278.34 inches ~ 278.3 inches

Capillary Height (based on Dip Tube Basis) = 0 inches **

Sludge Volume = 3,000 gallons *

Height of Sludge Layer (3 Kgal) above bottom ~ 1.1 inches

Supernatant Volume (11/05/03 In-Tank Video Estimate) = 0 gallons

Unpumpable Liquid Height Constant = 18 inches *

Assumed Saltcake Porosity = 24% *

Assumed Sludge Porosity = 17% *

For 100-series (75' dia.) tanks (500, 750, and 1000K gallon SSTs), 1 inch equals 2750 gallons when above the dish bottom. NOTE: AX-101 is a flat bottom tank (i.e. no dish). *

EQUATIONS

D.I.L. = Drainable Interstitial Liquid *
= {[Final Adj. Dip Tube Level – Sludge Height – Capillary Height] * 2750 gal/in} * assumed saltcake porosity + (Sludge Volume) * assumed sludge porosity

D.L.R. = Drainable Liquid Remaining *
= D.I.L. + supernatant volume

P.L.R. = Pumpable Liquid Remaining *
= D.L.R. – [(18" Unpump. Ht – 1.1") * assumed saltcake porosity * 2750 gal/in + (Sludge Volume)* assumed sludge porosity]

*Reference HNF-2978, Rev. 5
**Reference RPP-5556, Rev. 0

Evaluation Prepared by _____ Date 12/11/2K3

Evaluation Checked by _____ Date 12/11/2003

Single-Shell Tank Interim Stabilization Evaluation Form (cont.)

EVALUATION CALCULATIONS AND COMMENTS:

TANK: **241-AX-101**

RESULTS/CALCULATIONS

POROSITY:

Due to the nature of the waste in 241-AX-101, a calculation of the drainable porosity based on pumping history was not possible as the point of divergence between the surface and ILL could not be determined using approved methods. Therefore, the assumed values of saltcake (24%) and sludge (17%) will be used per the requirements of HNF-2978, Rev. 5.

DIP TUBE BASIS:

DIL = [(66.4" – 1.1" – 0") * 2750 gal/in] * 0.24 + (3,000 gal * 0.17)

= [179,575 * 0.24 + 3,000 gal * 0.17] = 43,098 + 510 = 43,608 gallons (43.6 Kgal)

DLR = DIL + Supernatant = 43,608 gallons + 0 gallons = 43,608 gallons (43.6 Kgal)

PLR = DLR – [(18" – 1.1") * 2750 gal/in * 0.24 + 3,000 gal * 0.17]

= 43,608 gal – [(46,475 gal * 0.24) + (3,000 gal * 0.17)] = 43,608 – (11,154 + 510) =

= 43,608 gal – 11,664 gal = 31,944 gal = (31.9 Kgal)

SOLIDS VOLUME:

The following description was obtained by review of the in-tank video taken 11/05/03. The ENRAF level during the video was approximately 130 inches, and will be used for the solids volume estimate as the level remains unchanged. All estimates regarding waste dimensions were obtained by comparison with known dimensions of installed in-tank equipment and drawing H-2-44562, sht. 1, rev. 4, *Structural Waste Storage Tanks Composite Section & Details*.

The surface of the waste is essentially flat and appears dry and flaky due to saltwell pumping. There is a slight depression around the saltwell screen whose diameter and depth cannot be determined as portions of it are blocked by installed in-tank equipment. Therefore, the volume of waste missing from around the saltwell screen will be considered negligible and is not included in the final solids volume calculations. Additionally, most of the installed in-tank equipment is caked with waste "lollipops" from pumping activities. This volume of waste is also considered negligible and is not reported in the final solids volume. Per HNF-2978, Rev. 5 and Best Basis Inventory (BBI) located in the TWINS database; the sludge volume of 241-AX-101 is 3 Kgal. For reporting purposes, the total quantity of solids in the tank will be calculated and the sludge volume will be subtracted from this total. This volume difference will then be the reported quantity of saltcake in 241-AX-101. For this calculation the saltcake and sludge solids volumes include the interstitial liquid but do not include any supernatant liquid.

For the purpose of this evaluation, the saltwell screen will be assumed to be in the center of the tank and the solids volume will include an evaluation of the tank upper surface volume and the lower volume. See SOLIDS CALCULATION FIGURE (next page). These volumes are then added together to obtain the total volume as follows:

Evaluation Prepared by _____ Date 12/11/2003

Evaluation Checked by _____ Date 12/11/03

Single-Shell Tank Interim Stabilization Evaluation Form (cont.)

EVALUATION CALCULATIONS AND COMMENTS:

TANK: **241-AX-101**

RESULTS/CALCULATIONS (cont.)

SOLIDS VOLUME (cont):

SOLIDS CALCULATION FIGURE

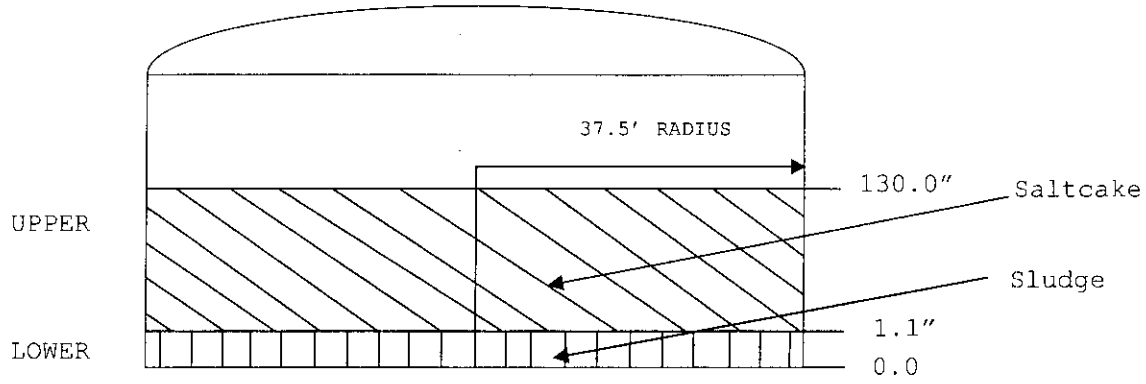

Volume (Upper) = Volume of [(130.0 in – 1.1 in) * 2750 gal/in]

Volume (Upper) = (128.9 in.* 2750 gal/in) = 354,475 gallons

Volume (Lower) = 3,000 gallons

Volume (Tot) gallons = 354,475 + 3,000 = 357,475 gallons = 357.5 Kgal

Solids Volume Remaining = Volume (Tot) – Supernatant Liquid

= 357,475 gallons - 0 gals = 357,475 gallons = 357.5 Kgal

Saltcake Volume remaining = Solids Volume Remaining – Sludge Volume

= 357,475 gallons gals – 3,000 gals = 354,475 gallons = 354.5 Kgal

FLOW DATA:

The final pump flow rate is found by data obtained from operating procedure TO-220-026, Rev. C-37 from 0800 April 30, 2003 to 2000 May 1, 2003 that show a total of 42 gallons of waste pumped over the time period of 1440 minutes (24 hours), while the pump ran in BY-AUTO mode. This time span was the last stable operating shift of the saltwell pump. During the final week of pumping, 241-AX-101 achieved a net waste flow rate below 0.05 gpm on six separate occasions. Flushes and/or over dilutes were performed between each occasion to verify flow data. During the final week of pumping, approximately 282 gallons of water was used for pump system piping and saltwell screen flushes. The following equation shows the pumping rate for the final day of pumping operations:

Pump Rate = [42 gallons / 1440 minutes] = (0.029 gpm)

Evaluation Prepared by _____ Date 12/11/2003

Evaluation Checked by _____ Date 12/11/03

Single-Shell Tank Interim Stabilization Evaluation Form (cont.)

EVALUATION CALCULATIONS AND COMMENTS:

TANK: **241-AX-101**

SOFTWARE:

None.

REFERENCES:

TO-220-026, Rev. A-0 through C-38, *Perform 241-AX-101 Saltwell Pumping.*

Drawing H-2-44562, sht. 1, rev. 4, *Structural Waste Storage Tanks Composite Section & Details.*

HNF-2978, Rev. 5, *Updated Pumpable Liquid Volume Estimates and Jet Pump Durations for Interim Stabilization of Remaining Single-Shell Tanks.*

RPP-5556, Rev. 0, *Updated Drainable Interstitial Liquid Volume Estimates for 119 Single-Shell Tanks Declared Stabilized*

TFC-ENG-DESIGN-C-10, Rev. A-1, *Engineering Calculations.*

TFC-ENG-CHEM-P-15, Rev. A-1, *Single-Shell Tank Interim Stabilization Evaluation* procedure.

HNF-SD-RE-TI-178, Rev. 8, *Single-Shell Tank Leak Stabilization Record.*

WS-03-0299, *241-G Weight Factor and Specific Gravity Readings*

Tank Waste Information System (TWINS) 2003, *queried December 03*, 2003, [posted Tank Integrity Reports], Hanford intranet at http://twinswhse.pnl.gov/

Pumpchrts_PE.xls, Excel log of saltwell pumping history from server \\ap012\dpu\pumpchartsPE.

CONCLUSIONS/RECOMMENDATIONS:

241-AX-101 has met the applicable criteria for declaration of interim stabilization. See Page 1 for summary and final tank disposition and approvals.

ATTACHMENTS:

All record attachments, raw data, and calculations for this evaluation, as well as other information may be found in the tank history file maintained by Interim Stabilization Engineering, per the requirements TFC-ENG-CHEM-P-15, section 4.2.19.

Evaluation Prepared by _____ Date 12/11/2K3

Evaluation Checked by _____ Date 12/11/03

STABILIZATION EVALUATION
NON-JET PUMPED TANKS

Tank: 102-AX

Evaluation (See continuation page for calculations and additional comments):

[xx] Photograph review completed - Date of most recent photographs 9/1/88

[xx] Tank history review completed

[xx] Tank temperature profile review completed

Surface Description: The surface is smooth gray sludge with one discernable pool of liquid covering approximately 20% of the surface.

Date 9/6/88

Solids Level 14 inches Date 9/5/88 Method Manual Tape

Liquid Level 14 inches Date 9/5/88 Method Manual Tape

Solids Volume 35,750 gallons

Estimated Drainable Liquid Volume 2750 gallons

Average Maximum Tank Temperature, past 6 months 80° F

Estimated Supernatant Volume 2750 gallons

[ ] Cost/Benefit Analysis attached

Evaluation Performed by J Eacker Date 9/6/88 Checked by V Boyle Date 9/6/88

Disposition of Tank:

[xx] Tank Interim Stabilized at 2750 gallons of drainable liquid

[ ] Tank not Interim Stabilized; stabilization activities resumed

Approved by: Manager, TFPE [signature] Date 9/8/88

Manager, TFS&O [signature] Date 9/8/88

Program Manager [signature] Date 9/9/88

DISTRIBUTION: TFPE Tank File, Tank Farm Surveillance Analysis, Approval Signatures

EVALUATION CALCULATIONS AND COMMENTS

Tank: AX-102 Page 2 of 2

The tank was pumped starting in August 1988 using a submersible pump. The pumping campaign produced a total of 13,200 gallons before the pump cavitated. Additional pumping attempts spread over several days failed to produce any liquid.

The amount of interstitial liquid was calculated from the waste volume assuming a porosity of 45%. The waste volume of 38,000 gallons leads to 17,500 gallons of interstitial liquid. The capillary height used for salt cake, however, is 33,000 gallons. Based on this estimate, none of the interstitial liquid is drainable and the total drainable liquid for this tank is the supernatant volume.

The amount of supernatant liquid remaining in the tank was estimated at 2750 gallons from the September 1, 1988 photographs. A best engineering estimate is that 20% of the surface is covered with liquid to a depth of 5 inches. The pool size was determined by comparing the pool to the overall size of the tank and objects of known dimensions. The depth was based on a 6 inch liquid level reading taken in the pool prior to the last day of pumping. This was then corrected to account for the amount of liquid pumped during the final pumping operations.

Calculations made by: J.A. Eacker, Adv Eng

Checking done by: V.C. Boyles, Sr Eng

INTERIM STABILIZATION EVALUATION
NON-JET PUMP TANKS

Tank: 103-AX

Evaluation (see continuation page for calculations and additional comments):

- [x] Photograph review completed - Date of most recent photographs 8-13-87
- [x] Tank History review completed
- [x] Tank temperature profile review completed

Surface Description: LIQUID FREE SURFACE, SOLIDS ARE LIGHT BROWN IN COLOR. SURFACE IS EVEN. Date 8-13-87

Solids Level 40.8" Date 8-17-87 Method LASS, FIC

Liquid Level 40.8" Date 8-17-87 Method FIC/PHOTO EVALUATION

Solids Volume 112,000 gal

Estimated Drainable Liquid Volume 35,600 gal

Average Maximum Tank Temperature, past 6 months 100°F*

Estimated Supernatant Volume 0 gal

- [ ] Cost/Benefit Analysis attached

Evaluation Performed by [signature] Date 8/17/87 Checked by [signature] Date 8/17/87

Disposition of Tank:

- [x] Tank Interim Stabilized at 35,600 gallons of drainable liquid
- [ ] Tank not Interim Stabilized; stabilization activities resumed

Approved by: Manager, ~~TF&EPE~~ TFPE [signature] Date 8/17/87

Manager, TFS&O [signature] for RTB Date 8/18/87

Program Manager [signature] Date 8/19/87

DISTRIBUTION: TF&EPE Tank File, Tank Farm Surveillance Analysis, Approval Signatures

* TANK TEMPERATURE FROM 12/85 DATA NO RECENT DATA AVAILABLE. TANK TEMPERATURES SHOWED A COOLING TREND

[signature] 8/17/87

EVALUATION CALCULATIONS AND COMMENTS

Tank: 103-AX

Page 2 of 2

FLAT BOTTOM TANK
SOLIDS LEVEL = 40.8"

TOTAL SOLIDS VOLUME = 40.8 INCHES (2750 GAL/IN)
= 112.2 kgal

SUPERNATANT VOLUME
FROM PHOTOS: 0 gal

DRAINABLE INTERSTITIAL LIQUID (DIL) REMAINING

DIL = (LIQUID LEVEL − CAPILLARY HEIGHT)(POROSITY)275

POROSITY = 45%
CAPILLARY HEIGHT = 12 INCHES
LL = 40.8 INCHES
DIL = (40.8 − 12)(.45)(2750) = 35,640 gal

Calculations made by: [illegible]
Checked by: [illegible]

INTERIM STABILIZATION EVALUATION

TANK NUMBER: 241-AX-104 EFFECTIVE DATE: 8-10-81

LIQUID LEVEL & RISER NO. 2.5" R-9E

SOLIDS LEVEL & RISER NO. 1.8" R-1B

EST. SUPERNATE LIQUID VOLUME 0

EST. DRAINABLE INTERSTITIAL LIQUID VOLUME 0

TEMPERATURE: 94 F

IS TANK HEAT LOAD A PROBLEM?

yes X no ___ unknown ___

The tank contains a heat load calculated to be in the range of 20,000 to 25,000 BTU/Hr, and continued tie-in to the 702-A Vessel Ventilation system is required.

IS THERE A POTENTIAL DOME LOAD PROBLEM? yes ___ no X

PHOTOGRAPH EVALUATION: Photo date - May 14,1981

The in-tank photos show a series of corrugation ridges in the tank bottom liner and no discernable liquid pools. There is no definable pattern to this buckling configuration. In addition, areas of mounded dry sludge are seen at random locations about the tank.

COMMENTS:

The discrepancy between the liquid level and sludge level readings is due to the irregularity of the dry bottom surface.

All valve and service pit drain lines to this tank were removed during August 1981.

Prepared By: [illegible] 8-22-81

Reviewed By: K. Dennis Mayer

STABILIZATION EVALUATION Page 1 of 2

TANK: 241-B-101

EVALUATION (see continuation page for calculations and additional comments):

[✓] Photograph review completed - Date of most recent photographs: 5/19/93

[✓] Tank history review completed SEE TANK HISTORY FILE

[✓] Tank temperature profile review completed 2-5-90 @ 118°F

Surface Condition & Comments: PHOTOS ARE OCCASIONALLY HAZY. (PHOTOS FROM 9/29/87 ARE VERY HAZY.) A BROWN, MOTTLED, DRY SURFACE OF SLUDGE IS VISIBLE IN 5/19/93 PHOTOS. A RELATIVELY FLAT SURFACE IS VISIBLE IN THE PHOTOS. NO SALTCAKE IS VISIBLE.

FIC IN "INTRUSION MODE" AT 36.7 INCHES BASELINE ON 2/13/84

Solids Level 35.2 INCHES Date 1/3/84 Method FIC

Liquid Level 35.2 INCHES Date 1/3/84 Method FIC

Solids Volume 113,400 GALLONS

Estimated Drainable Insterstitial Liquid Remaining Volume 36,200 GALLONS (DIL)

Estimated Supernatant Volume Remaining ~0

Tank was pumped with a ~~submersible~~ P-10 pump ✓ Yes ___ No; if yes, 3100 gallons pumped.
RECORD #2774
JUNE 1975

[ ] Cost/Benefit Analysis attached

DISPOSITION OF TANK:

[✓] Tank Interim Stabilized at ~0 gallons of supernatant and 36,200 gallons of drainable interstitial liquid

[ ] Tank not Interim Stabilized; continue stabilization activities

Evaluation Performed by D.D. Wiggins DDW Date 6/27/91 Checked by K.A. White KAW Date 6/27/91

APPROVED BY:

Manager, Stabilization Engineering V.C. Boyles Date 6/27/91

Manager, Single Shell Tanks R.E. Raymond Date 7-5-91

Manager, Tank Farms Facility Operations [illegible] Date 7/9/91

DISTRIBUTION: Tank Farm Surveillance Analysis, SE Tank History File, Nuclear Facility Safety, TPA Integration Control, Managers Approval, Evaluation Performer, and Checker signatures

STABILIZATION EVALUATION
CONTINUATION SHEET

EVALUATION CALCULATIONS AND COMMENTS:

TANK: 241-B-101

1- COMMENTS:

* THIS TANK DECLARED INTERIM STABILIZED IN MARCH, 1981 AND INTERIM ISOLATED IN MAY, 1981. THIS PAPERWORK IS A RESUBMITTAL BECAUSE THE ORIGINAL INTERIM STABILIZATION PAPERWORK IS MISSING.
* SINGLE-SHELL, DISH-BOTTOMED TANK (500,000 GALLON CAPACITY)
* ASSUMED LEAKER
* USE MOST CONSERVATIVE ESTIMATE. 45% POROSITY TO CALCULATED DIL AND 12.5% POROSITY TO DETERMINE PLR

2- TOTAL WASTE: (INCHS X $\frac{VOL}{IN}$) + DISH VOLUME

$= (36.7\ IN)(2750\ \frac{GALLONS}{IN}) + 12,500$

$= 113,400$ GALLONS

3- DRAINABLE INTERSTITIAL LIQUID (DIL): (TOTAL WASTE - 12 IN CAPILLARY VOL) 0.45 POROSITY

$= (113,400\ GALLONS - (12)(2750\ \frac{GALLONS}{IN}))0.45$

$= 36,200$ GALLONS

4- DRAINABLE LIQUID REMAINING (DLR) = DIL + SUPERNATANT

SUPERNATANT = 0

DLR = 36,200 + 0 = 36,200 GALLONS

5- PUMPABLE LIQUID REMAINING (PLR):

DLR - (18 INCHES OF 12.5% POROSITY)

$= 36,200 - ((18\ IN)(2750\ \frac{GALLONS}{IN})(0.125))$

PLR = 30,000 GALLONS

Calculations made by Dirk D. Wiggins Date 6/27/91

Checked by Katee White Date 6/27/91

Tank: E-102

Evaluation (see continuation page for calculations and additional comments):

☒ Photograph review completed - Date of most recent photographs 8/21/85

☒ Tank History review completed

☒ Tank temperature profile review completed

Surface Description: Sludge Surface with a supernate pool in the middle. Pool extends to within 6' of tank walls. Several islands in the middle. Estimated avg depth 2" Date 8/22/85

Solids Level 7.1"/5.1" Date 8/21/85 Method Photo Observation

Liquid Level 7.1" Date 8/21/85 Method FIC

Solids Volume 28,000 gal

Estimated Drainable Liquid Volume 0

Average Maximum Tank Temperature, past 6 months N/A

Estimated Supernatant Volume 4000 gallons

☐ Cost/Benefit Analysis attached

Evaluation Performed by KA Mudge Date 8/22/85 Checked by [illegible] Date 8/22/85

Disposition of Tank:

☒ Tank Interim Stabilized at 4000 gallons of drainable liquid

☐ Tank not Interim Stabilized; stabilization activities resumed

Approved by: Manager, TF&EPE [signature] Date 8/22/85

Manager, TFS&O [signature] Date 8/22/85

Program Manager [signature] Date 8/23/85

DISTRIBUTION: TF&EPE Tank File, Tank Farm Surveillance Analysis, Approval Signatures

EVALUATION CALCULATIONS AND COMMENTS

Tank: 102-B

Page 2 of 2

Supernatant Volume

~~Diam.~~ % Coverage = $\frac{(63/2)^2 \pi}{(75/4)^2 \pi} \times 100 = 70.56\%$

Average depth = 2"

$(70.56\%)(2750\ gal/in)(2\ in) = 3880\ gal$ or $\simeq$ 4000 gallons supernate

For Sludge Drainable Interstitial = 0 - Capillary Height is 2 FEET

Total Pumpable Liquid Remaining = 0

Sludge Volume = 7.1" (2750 gal/in) + 12,500 gal - 3880 gal

= 28,145 gal $\simeq$ 28,000

Calculations made by: K L Mudge

Checked by: T W Ross 8/22/85

Tank: B-103

Evaluation (see continuation page for calculations and additional comments):

☒ Photograph review completed - Date of most recent photographs 2-5-85

☒ Tank History review completed

☒ Tank temperature profile review completed

Surface Description: The tank contains a moist, dark colored sludge. The surface is relatively smooth with a small supernate pool with a diameter of approximately 3 ft around the saltwell screen Date 2/25/85

Solids Level 16.8 inches Date 2-25-85 Method FIC

Liquid Level 16.8 inches Date 2-25-85 Method FIC

Solids Volume 58,700 gallons

Estimated Drainable Liquid Volume 0 gallons

Average Maximum Tank Temperature, past 6 months Not Available

Estimated Supernatant Volume 0 gallons

☐ Cost/Benefit Analysis attached

Evaluation Performed by JS Hill Date 2/25/85 Checked by JS Hill Date 2/25/85

Disposition of Tank:

☒ Tank Interim Stabilized at 0 gallons of drainable liquid

☐ Tank not Interim Stabilized; stabilization activities resumed

Approved by: Manager, TF&EPE R.A. Van Meter for JCF Date 2/25/85

Manager, TFS&O RB Gelman Date 2/25/85

Program Manager RD Wojtasek Date 2/26/85

DISTRIBUTION: TF&EPE Tank File, Tank Farm Surveillance Analysis, Approval Signatures

EVALUATION CALCULATIONS AND COMMENTS

Tank: 103-8

Page 2 of 2

Volume = (inches) 2750 + 12,500

Volume = (16.8) 2750 + 12500 = 58,700 gallons

Drainable Interstitial = 0 gallons (All liquid held within capillary height for sludge.

Calculations made by: J Stan Hill

Checked by: Terry L. Voit

Tank: 104-B

Evaluation (see continuation page for calculations and additional comments):

☒ Photograph review completed - Date of most recent photographs 6/26/85

☒ Tank History review completed

☒ Tank temperature profile review completed

Surface Description: The surface consists of approximately 70% saltcake with the remainder as a supernate pool with an average depth of approximately 1-inch Date 6/28/85

Solids Level 130.5 Date 6/27/85 Method Manual Tape

Liquid Level 130.5 Date 6/27/85 Method Manual Tape

Solids Volume 370,000 gallons

Estimated Drainable Liquid Volume 47,000 gallons

Average Maximum Tank Temperature, past 6 months —

Estimated Supernatant Volume 1,000 gallons

☐ Cost/Benefit Analysis attached

Evaluation Performed by JJ Hill Date 6/28/85 Checked by RAU Date 6/28/85

Disposition of Tank:

☒ Tank Interim Stabilized at 47,000 gallons of drainable liquid

☐ Tank not Interim Stabilized; stabilization activities resumed

Approved by: Manager, TF&EPE RAU Date 6-28-85

Manager, TFS&O [illegible] Date 6-28-85

Program Manager [illegible] Date 6-28-85

DISTRIBUTION: TF&EPE Tank File, Tank Farm Surveillance Analysis, Approval Signatures

EVALUATION CALCULATIONS AND COMMENTS

Tank: 104-B

Page 2 of 2

Supernate Volume = (2750)(1)(.3) = 825 gallons ⇒ 1000 gallons

Solids Volume = 2750(130.5) + 12500 - 1000 = 370,375 gallons

Sludge Volume = 301,000 gallons Saltcake Volume = 69375 gallons

D.I. Sludge = (301,000 - 66,000) .125 = 29375 gallons

D.I. Saltcake = (69375 - 33000) .45 = 16369 gallon

Total Drainable = 29375 + 16369 + 1000 = 46,744 ⇒ 47,000 gallons

Calculations made by: J Stan Hill

Checked by: RA Van Meter

Tank: 105 B

Evaluation (see continuation page for calculations and additional comments):

☒ Photograph review completed - Date of most recent photographs 12-18-84

☒ Tank History review completed

☒ Tank temperature profile review completed prior to 4/82.

Surface Description: The surface consists of saltcake with a base height of ~40." A shelf with a heigth of ~12', exists above the base. The shelf extends around the entire tank with a width of approximately 10'. A very small supernate pool is located around the saltwell screen, indicating the base height is saturated saltcake Date 12/20/84

Solids Level 40.25"/190" Date 12/12/84 Method Manual Tape / Photo Observation

Liquid Level 40.25" Date 12/20/84 Method Photo Observation

Solids Volume 306,000 gallons

Estimated Drainable Liquid Volume 22,500 gallons

Average Maximum Tank Temperature, past 6 months Not Available

Estimated Supernatant Volume 0 gallons

☐ Cost/Benefit Analysis attached

Evaluation Performed by _____ Date _____ Checked by _____ Date _____

Disposition of Tank:

☒ Tank Interim Stabilized at 22,500 gallons of drainable liquid

☐ Tank not Interim Stabilized; stabilization activities resumed

Approved by: Manager, TF&EPE R A Van Meter for LHR Date 12/27/84

Manager, TFS&O G. T. Dukelow Date 12-27-84

Program Manager R A Zinsto Date 12-27-84

DISTRIBUTION: TF&EPE Tank File, Tank Farm Surveillance Analysis, Approval Signatures

EVALUATION CALCULATIONS AND COMMENTS

Tank: 105-B

Page 2 of 2

Solids Volume: Base Volume + Shelf Volume

Base Volume: $(2750)(40.25) + 12500 = 123,188 \Rightarrow 123,000$ gallons

Shelf Volume: $[\pi r_2^2 h - \pi r_1^2 h](7.48 \text{ gal/ft}^3)$ where $r_2 = 37.5$ ft $r_1 = 27.5$ ft $h = 12$ ft

$[\pi (37.5)^2 (12) - \pi (27.5)^2 (12)] 7.48 = 183,$ gallons $\Rightarrow 183,000$ gallons

Total Volume = 123,000 + 183,000 = 306,000 gallons

Drainable Interstitial Liquid:

- 40,000 gallons of sludge at bottom of tank, ∴ 0 gallons DI liquid in sludge.
- Base Volume Containing Saltcake
  123,000 - 40,000 = 83,000 gallons
  (83,000 - 33,000) · 45 = 22,500 gallons
- Shelf Volume consisting of Saltcake contains no drainable interstitial liquid.

Calculations made by: J Stam Hill

Checked by: R A Van Meter

Tank: B-106

Evaluation (see continuation page for calculations and additional comments):

☒ Photograph review completed - Date of most recent photographs 2-28-85

☒ Tank History review completed

☒ Tank temperature profile review completed

Surface Description: The surface consists of a smooth reddish-brown sludge that contains a few small supernate pools ~~with~~ totaling approximately 1000 gallons Date 3/19/85

Solids Level 38.10" Date 3/19/85 Method FIC

Liquid Level 38.10" Date 3/19/85 Method FIC

Solids Volume 116,000 gallons

Estimated Drainable Liquid Volume 7300 gallons

Average Maximum Tank Temperature, past 6 months N/A

Estimated Supernatant Volume 1000 gallons

☐ Cost/Benefit Analysis attached

Evaluation Performed by J Stanfield Date 3/19/85 Checked By TS Vail Date 3/19/85

Disposition of Tank:

☒ Tank Interim Stabilized at 7300 gallons of drainable liquid

☐ Tank not Interim Stabilized; stabilization activities resumed

Approved by: Manager, TF&EPE RAV JC Fulton Date 3-19-85

Manager, TFS&O [signature] Date 3-19-85

Program Manager R D [signature] Date 3-20-85

DISTRIBUTION: TF&EPE Tank File, Tank Farm Surveillance Analysis, Approval Signatures

EVALUATION CALCULATIONS AND COMMENTS

Tank: B-106

Page 2 of 2

Solids Volume: Volume = (Inches)2750 + 12500

Volume = (38.1)(2750) + 12500 = 117275 gallons

Since this contains ~1000 gallons of supernate, the adjusted solids volume is 116,275 gallons.

Drainable Interstitial Liquid = (116,275 - 66000)(.125) ≅ 6300 gallons

Drainable Liquid Remaining = 6300 gallons + 1000 gallons = 7300 gallons

Calculations made by: J Stan Hill

Checked by: Terry L Wail

Tank: B-107

Evaluation (see continuation page for calculations and additional comments):

☒ Photograph review completed - Date of most recent photographs 2/28/85

☒ Tank History review completed

☒ Tank temperature profile review completed

Surface Description: The surface consists of a relatively smooth, light brown colored sludge with a small supernate pool around the saltwell screen. In addition, there is an area composed of small, interconnecting supernate pools Date 3/19/85

Solids Level 55.5" Date 3/19/85 Method Manual Tape

Liquid Level 65.5" Date 3/19/85 Method Manual Tape

Solids Volume 164,000

Estimated Drainable Liquid Volume 13,300 gallons

Average Maximum Tank Temperature, past 6 months N/A

Estimated Supernatant Volume 1000 gallons

☐ Cost/Benefit Analysis attached

Evaluation Performed by J. Hanson Date 3/19/85 Checked by I.S. Vail Date 3/19/85

Disposition of Tank:

☒ Tank Interim Stabilized at 13,300 gallons of drainable liquid

☐ Tank not Interim Stabilized; stabilization activities resumed

Approved by: Manager, TF&EPE [signature] Date 3-19-85

Manager, TFS&O [signature] Date 3-19-85

Program Manager [signature] Date 3-20-85

DISTRIBUTION: TF&EPE Tank File, Tank Farm Surveillance Analysis, Approval Signatures

EVALUATION CALCULATIONS AND COMMENTS

Tank: B-107

Page 2 of 2

Solids Volume: Volume = (Inches)(2750)+12500

Volume = (55.5)(2750)+12500 = 165,125 gallons

The adjusted Volume reflecting the supernate pool is 164,125 gallons.

Drainable Interstitial Liquid = (164,125 - 66000) .125 ≈ 12 300 gallons

Remaining Drainable Liquid = 12,300 gallons + 1000 gallons = 13,300 gallons

Calculations made by: J Stan Hill

Checked by: Terry L. Vail

Tank: 108-B

Evaluation (see continuation page for calculations and additional comments):

☒ Photograph review completed - Date of most recent photographs 5/10/85

☒ Tank History review completed

☒ Tank temperature profile review completed

Surface Description: The surface consists of a dry, light gray colored, smooth textured sludge. There are no supernate pools present Date 5/22/85

Solids Level 29.5" Date 5/22/85 Method FIC

Liquid Level 29.5" Date 5/22/85 Method FIC

Solids Volume 94,000 gallons

Estimated Drainable Liquid Volume 3500 gallons

Average Maximum Tank Temperature, past 6 months N/A

Estimated Supernatant Volume 0 gallons

☐ Cost/Benefit Analysis attached

Evaluation Performed by GJ Hill Date 5/22/85 Checked by RAV Date 5/22/85

Disposition of Tank:

☒ Tank Interim Stabilized at 3500 gallons of drainable liquid

☐ Tank not Interim Stabilized; stabilization activities resumed

Approved by: Manager, TF&EPE RAV Date 5/22/85

Manager, TFS&O [signature] Date 5/22/85

Program Manager [signature] Date 5-22-85

DISTRIBUTION: TF&EPE Tank File, Tank Farm Surveillance Analysis, Approval Signatures

EVALUATION CALCULATIONS AND COMMENTS

Tank: 108-B

Page 2 of 2

Volume of Sludge ⇒ (29.5)2750 + 12500 = 93,625 gallons

Drainable Interstitial Liquid ⇒ (93,625 - 66,000) · 125 = 3453 gallons

Supernate Volume = 0 gallons

Total Drainable = 3453 gallons ⇒ 3500 gallons

Calculations made by: JS Hill

Checked by: R9 Van Mooten

Tank: 109 B

Evaluation (see continuation page for calculations and additional comments):

☒ Photograph review completed - Date of most recent photographs 4-2-85

☒ Tank History review completed

☒ Tank temperature profile review completed

Surface Description: The surface consists of a dry dark sludge. No supernate pools were observed.

Date 4-5-85

Solids Level 41.75" Date 4/5/85 Method Manual Tape

Liquid Level 41.75" Date 4/5/85 Method Manual Tape

Solids Volume 127,000 gallons

Estimated Drainable Liquid Volume 7700 gallons

Average Maximum Tank Temperature, past 6 months N/A

Estimated Supernatant Volume 0 gallons

☐ Cost/Benefit Analysis attached

Evaluation Performed by J S Hill Date 4/5/85 Checked by T. S. Vail Date 4/8/85

Disposition of Tank:

☒ Tank Interim Stabilized at 7700 gallons of drainable liquid

☐ Tank not Interim Stabilized; stabilization activities resumed

Approved by: Manager, TF&EPE RAY J C Fellt Date 4-8-85

Manager, TFS&O R Weaver for W.H. Trott Date 4-8-85

Program Manager R D Wojtanik Date 4-9-85

DISTRIBUTION: TF&EPE Tank File, Tank Farm Surveillance Analysis, Approval Signatures

EVALUATION CALCULATIONS AND COMMENTS

Tank: 109-B

Page 2 of 2

Solids Volume = (41.75)(2750) + 12500 = 127313 gallons

Drainable Liquid = (127313 - 66000) . 125 ≈ 7700 gallons

Calculations made by: J Stan Hill

Checked by: Terry L. Vail

Tank: 110-B

Evaluation (see continuation page for calculations and additional comments):

☒ Photograph review completed - Date of most recent photographs 12/14/84

☒ Tank History review completed

☒ Tank temperature profile review completed prior to 4/16/82.

Surface Description: The surface consists primarily of cracked damp sludge with a dark reddish-brown appearance. While recent as well as past photographs (1/86) were not very clear, a supernate pool with a diameter of 20 ft could be seen. Date 12/17/84

Solids Level 84.5 inches Date 12/14/84 Method Manual FIC

Liquid Level 84.5 inches Date 12/14/84 Method Manual FIC

Solids Volume 245,000 gallons

Estimated Drainable Liquid Volume 23,400 gallons

Average Maximum Tank Temperature, past 6 months Not Available

Estimated Supernatant Volume 1000 gallons

☐ Cost/Benefit Analysis attached

Evaluation Performed by _____ Date _____ Checked by _____ Date _____

Disposition of Tank:

☒ Tank Interim Stabilized at 23,400 gallons of drainable liquid

☐ Tank not Interim Stabilized; stabilization activities resumed

Approved by: Manager, TF&EPE [signature] Date 12/17/84

Manager, TFS&O [signature] Date 12/19/84

Program Manager [signature] Date 12-20-84

DISTRIBUTION: TF&EPE Tank File, Tank Farm Surveillance Analysis, Approval Signatures

EVALUATION CALCULATIONS AND COMMENTS

Tank: 110-B

Page 2 of 2

Estimated Supernate Volume: 1,000 gallons

Solids Volume: (84.5)(2750) + 12500 = 244875 gallons ⇒ 245,000 gallons

Drainable Interstitial Liquid: (245,000 - 66000) .125 = 22375 gallons ⇒ 22,400 gallons

Total Drainable Liquid: 22,400 + 1,000 = 23,400 gallons.

Pump Liquid: (22400 - 6500) + 1000 = 16,900 gallons.

Calculations made by: G Alan Hill

Checked by: Terry S Vail

Tank: 111-B

Evaluation (see continuation page for calculations and additional comments):

☒ Photograph review completed - Date of most recent photographs 6/26/85

☒ Tank History review completed

☒ Tank temperature profile review completed

Surface Description: Approximately 75% of the surface consists of a dark sludge. The remaining surface area is composed of a supernate pool with an average depth of 1-inch. Date 6/28/85

Solids Level 81.70 Date 5/8/85 Method FIC

Liquid Level 81.70 Date 5/8/85 Method FIC

Solids Volume _____

Estimated Drainable Liquid Volume 22,000 gallons

Average Maximum Tank Temperature, past 6 months —

Estimated Supernatant Volume 1000 gallons

☐ Cost/Benefit Analysis attached

Evaluation Performed by JSH Date 6/28/85 Checked by CAV Date 6/28

Disposition of Tank:

☒ Tank Interim Stabilized at 22,000 gallons of drainable liquid

☐ Tank not Interim Stabilized; stabilization activities resumed

Approved by: Manager, TF&EPE RAV Date 6/28/85

Manager, TFS&O [illegible] Date 6/28/85

Program Manager [illegible] Date 6/28/85

DISTRIBUTION: TF&EPE Tank File, Tank Farm Surveillance Analysis, Approval Signatures

EVALUATION CALCULATIONS AND COMMENTS

Tank: 111-B

Page 2 of 2

Supernate Volume = .25 (2750) = 688 gallons ⇒ 1000 gallons

Solids Volume = 2750 (81.70) + 12500 - 1000 gallons = 236,175 gallons

Drainable Interstitial = [(236,175) - 66000] . 125 = 21,272 gallons ⇒ 21,000

Total Drainable = ~~21,272~~ 21,000 + 1000 = 22,000 gallons

Calculations made by: [signature]

Checked by: [signature]

Tank: 112-B

Evaluation (see continuation page for calculations and additional comments):

☒ Photograph review completed - Date of most recent photographs 5/29/85

☒ Tank History review completed

☒ Tank temperature profile review completed

Surface Description: The surface consists of a dark colored moist sludge with a supernate pool over 90% of the surface. The average supernate pool depth is approximately 1-inch Date 5/31/85

Solids Level 7.4/6.4 Date 5/31/85 Method FIC

Liquid Level 7.4 Date 5/31/85 Method FIC

Solids Volume 30,000 gallons

Estimated Drainable Liquid Volume 2,500 gallons

Average Maximum Tank Temperature, past 6 months ——

Estimated Supernatant Volume 2,500 gallons

☐ Cost/Benefit Analysis attached

Evaluation Performed by J. Stan Hill Date 5/31/85 Checked by CW Date 5/31/85

Disposition of Tank:

☒ Tank Interim Stabilized at 2500 gallons of drainable liquid

☐ Tank not Interim Stabilized; stabilization activities resumed

Approved by: Manager, TF&EPE [signature] Date 5/31/85

Manager, TFS&O [signature] Date 5/31/85

Program Manager for R.D. Wojtasek [signature] Date 5/31/85

DISTRIBUTION: TF&EPE Tank File, Tank Farm Surveillance Analysis, Approval Signatures

EVALUATION CALCULATIONS AND COMMENTS

Tank: 112-B

Page 2 of 2

Solids Volume = (Inches) 2750 + 12,500 ⇒ (6.4) 2750 + 12500 + 1 (2750) (.1)

= 30375 gallons

D.I. = (30375 - 66000) .125 = 0

Supernate Volume = .9 (2750)(1) = 2475 gallons

Total Drainable = 2500 gallons

Calculations made by: J. Stanfield

Checked by: E W Ess 5/31/85

Tank: 202-B

Evaluation (see continuation page for calculations and additional comments):

☒ Photograph review completed - Date of most recent photographs 5/29/85

☒ Tank History review completed

☒ Tank temperature profile review completed

Surface Description: 60% of the surface consists of a yellow colored sludge with the remaining 40% being a supernate pool with an average depth of approximately 4 inches Date 5/31/85

Solids Level 142.75 Date 5/27/85 Method Manual Tape

Liquid Level 142.75 Date 5/27/85 Method Manual Tape

Solids Volume 27,000 gallons

Estimated Drainable Liquid Volume 3100 gallons

Average Maximum Tank Temperature, past 6 months ——

Estimated Supernatant Volume 300 gallons

☐ Cost/Benefit Analysis attached

Evaluation Performed by [signature] Date 5/31/85 Checked by [signature] Date 5/31/85

Disposition of Tank:

☒ Tank Interim Stabilized at 3100 gallons of drainable liquid

☐ Tank not Interim Stabilized; stabilization activities resumed

Approved by: Manager, TF&EPE [signature] Date 5/31/85

Manager, TFS&O [signature] Date 5/31/85

Program Manager [signature] R.D. WESTASEK Date 5/31/85

DISTRIBUTION: TF&EPE Tank File, Tank Farm Surveillance Analysis, Approval Signatures

EVALUATION CALCULATIONS AND COMMENTS

Tank: 202-B

Page 2 of 2

~~Solids~~ Volume = (Inches - 6) 196 + 590

Solids Volume = (138.75 - 6) 196 + 590 + 4(196)(.6) = 27079 gallons ⇒ 27,000 gal.

Drainable Int. = (27,000 - 5,000) .125 = 2750 gallons

Supernate Volume = (196)(4-inches) .4 = 314 gallons

Total Drainable = 314 + 2750 = 3064 gallons ⇒ 3100 gallons

Calculations made by: [signature]

Checked by: [signature] 5/31/85

INTERIM STABILIZATION EVALUATION - NON-JET PUMPED TANKS

Tank: 203-B

Evaluation (see Continuation Page for calculations and additional comments):

[X] Photograph review completed - Date of most recent photographs 7-7-83

[X] Tank history review completed

[X] Tank temperature profile review completed

Surface Description: Surface covered with supernatant estimated to be an average of three inches deep.

Date 7-7-83

Solids Level 257.5" Date 5-29-84 Method Estimation (photo)

Liquid Level 260.5" Date 5-29-84 Method Manual Tape

Solids Volume 50,000 gallons

Estimated Drainable Liquid Volume 6000 gallons

Average Maximum Tank Temperature, past 6 months 60°F. (last reading 4-16-82)

Estimated Supernatant Volume 600 gallons

[X] Cost/Benefit Analysis attached

Evaluation Performed by NE Bell Date 5-29-84 Checked by [illegible] Date 5-30-84

Disposition of Tank:

[X] Tank Interim Stabilized at 6000 gallons of drainable liquid

[ ] Tank not Interim Stabilized; stabilization activities resumed

Approved by: Manager, TF&EPC [illegible] Date 5-31-84

Manager, TFS&O [illegible] Date 5-31-84

Program Manager [illegible] Date 6-5-84

Director, R&E [illegible] Date 6-27-84

Director, Prod. Proc. [illegible] Date 6-28-84

Director, HS&E [illegible] Date 6/28/84

Director, WMPO J. W. Patterson Date 6/29/84

INTERIM STABILIZATION EVALUATION - NON-JET PUMPED TANKS

(CONTINUATION PAGE)

Evaluation Calculations and Comments

TANK: 203-B

Liquid Level = 260.5 inches (manual tape)

Solids Level = 257.5 inches (photographic evaluation - average over tank)

Supernatant Volume = 3 inches x 196 gal/in. = 588 gal. (600)

Solids Volume = (257.5 - 6) x 196 + 590 = 49,884 gal. (50,000)

Drainable Liquid = Drainable Interstitial Liquid + Supernatant

Drainable Interstitial = (Solids - Capillary Height x 196) x Porosity

For sludge, capillary height is estimated to be 24" and porosity to be 0.125.

DIL = [49,884 - (24 x 196)] x 0.125 = 5647 gal.

Drainable Liquid = 5647 + 588 = 6236 gallons

If the sludge were to act like salt cake (capillary height of 12" and porosity of 0.45),

DIL = [49,884 - (12 x 196)] x 0.45 = 21,389

Drainable Liquid = 21,977 (22,000 gal)

Calculations by Nancy C Bell Date 5-29-84

Checked by R. Van Meter Date 5-30-84

INTERIM STABILIZATION EVALUATION - NON-JET PUMPED TANKS

Tank: 204-B

Evaluation (see Continuation Page for calculations and additional comments):

[X] Photograph review completed - Date of most recent photographs 5-19-83

[X] Tank history review completed

[X] Tank temperature profile review completed

Surface Description: 98% of surface covered with supernatant estimated to be an average of 4" deep

Date 5-19-83

Solids Level 252.5" Date 5-29-84 Method Estimation (photo)

Liquid Level 256.5" Date 5-22-84 Method Manual Tape

Solids Volume 49,000 gallons

Estimated Drainable Liquid Volume 6000 gallons

Average Maximum Tank Temperature, past 6 months 57°F. (last reading 4-16-82)

Estimated Supernatant Volume 800 gallons

[X] Cost/Benefit Analysis attached

Evaluation Performed by N E Bell Date 5-29-84 Checked by [illegible] Date 5-31-84

Disposition of Tank:

[X] Tank Interim Stabilized at 6000 gallons of drainable liquid

[ ] Tank not Interim Stabilized; stabilization activities resumed

Approved by: Manager, TF&EPC [illegible] Date 5-31-84

Manager, TFS&O [illegible] Date 5-31-84

Program Manager [illegible] Date 6-5-84

Director, R&E [illegible] Date 6-27-84

Director, Prod. Proc. [illegible] Date 6-28-84

Director, HS&E [illegible] Date 6/25/84

Director, WMPO J. W. Patterson Date 6/29/84

INTERIM STABILIZATION EVALUATION - NON-JET PUMPED TANKS

(CONTINUATION PAGE)

Evaluation Calculations and Comments

TANK: 204-B

Liquid Level = 256.5 inches (manual tape)

Solids Level = 252.5 inches (photographic evaluation)

Note: Solids level determination attempted with manual tape; however, results were indecisive. Solids are relatively flat and supernate estimate is considered valid.

Supernatant Volume = 4 inches x 196 gal/in. = 784 gal. (800)

Solids Volume = (252.5 − 6) x 196 + 590 = 48,904

Drainable Liquid = Drainable Interstitial Liquid (DIL) + Supernatant

DIL = (Solids − Capillary Height x 196 gal/in) x Porosity

For sludge, capillary height is estimated to be 24" and porosity to be 0.125.

DIL = [48,904 − (24 x 196)] x 0.125 = 5,525 gal.

Drainable Liquid = 5525 + 784 = 6,309 gal.

If the sludge were to act like saltcake (capillary height of 12" and porosity of 0.45);

DIL = (48,904 − 12 x 196) x 0.45 = 20,948

Drainable Liquid = 20,948 + 784 = 21,732 gal.

Calculations by Nancy L Bell Date 5-29-89

Checked by Robert A. Van Note Date 5-30-89

October 2, 1978

TO: Distribution

FROM: J. W. Bailey
Tank Farm Process Engr'g
2750-E/200-East
Ext. 221

SUBJECT: Tank Status Update

Based on a Tank Farms Process Engineering evaluation of tank photographs and/or liquid and solids level data, the following listed tanks have changed status as indicated below. Future operations and reporting should reflect these status changes. The effective date for these changes is September 30, 1978.

TANK	PREVIOUS STATUS	NEW STATUS	EST. SUPERN. LIQ. (GAL.)
241-A-104	Leaker-Primary Stab.	Leaker-Interim Stab.	-0-
241-AX-104	Inactive	Inactive-Primary Stab.	-0-
241-B-102	Active	Inactive	19,000
241-BX-101	Inactive-Primary Stab.	Inactive-Interim Stab.	-0-
241-SX-103	Active	Inactive-Primary Stab.	-0-
241-SX-105	Active	Inactive-Primary Stab.	-0-
241-SX-115	Inactive-Primary Stab.	Inactive-Interim Stab.	-0-
241-TX-107	Inactive	Inactive-Primary Stab.	1,000*
241-TX-114	Inactive	Inactive-Primary Stab.	-0-
241-TX-117	Inactive	Inactive-Primary Stab.	-0-
241-Ty-105 ~~241-TX-105~~	Inactive	Inactive-Primary Stab.	-0-
241-U-105	Active	Inactive	23,000
241-U-201	Inactive	Inactive-Primary Stab.	1,000*
241-U-202	Inactive	Inactive-Primary Stab.	1,000*
241-U-203	Inactive	Inactive-Primary Stab.	1,000*
241-U-204	Inactive	Inactive-Primary Stab.	1,000*

* Liquid is nonpumpable

Documentation of the engineering evaluations supporting these status changes will be maintained on file at TFPE. For further details on these evaluations contact V. D. Maupin, ext. 217.

John W. Bailey

J. W. Bailey
Tank Farm Process Engr'g

JWB/rfh

Distribution:
C. R. Carter
G. T. Dukelow
J. H. Garbrick
R. B. Langley
C. A. Petersen
R. A. Zinsli

cc:
D. R. Autery
H. A. Anderson
J. W. Bailey
C. A. Mulvey
V. D. Maupin
G. A. Olsen
T. B. Veneziano
LB

INTERIM STABILIZATION

TANK: 102-BX EFFECTIVE DATE: NOV. 30, 1978

Temperature: 68°F TO 70°F

Sample Required: YES ☐ NO ☒

PHOTO EVALUATION: YES ☒ NO ☐

COMMENTS: This tank is changed from Leaker - Primary Stabilized - Partially Isolated to Leaker - Interim Stabilized - Partially Isolated.

The temperature data is attached to this form. This data covers a time period from April 4, 1975 through July 16, 1978. During this time period the highest temperature recorded was 83°F four inches from the tank bottom on January 11, 1977.

There is 10" of sludge remaining in this tank plus 12,500 gallons in the dish bottom. Diatomaceous earth has been added to stabilize any liquid remaining on the surface. Photos show a totally dry surface across the entire tank.

There is no sample required to interim stabilize this tank.

Tank: 102-BX

Photo Date: 11-13-78

Photo I.D: 84031

Liquid Level: 2'6½"

Observation of Surface: The tank surface is 100% dry and cracked. The diatomaceous earth appears to have stabilized all surface liquid.

Salt Well Status: No pump or salt well installed

Lollipops? ___ Yes X No

Other: The manual tape is ~~[illegible]~~ touching on a dry surface. There are two T.C. probes visible.

Interpreted by : V.D. Maupin

Date: ~~[illegible]~~ 12/4/78

Reviewed by :

Date :

INTERIM STABILIZATION EVALUATION - NON-JET PUMPED TANKS

Tank: 103-BX

Evaluation (see Continuation Page for calculations and additional comments):

[X] Photograph review completed - Date of most recent photographs 7-8-83

[X] Tank history review completed

[X] Tank temperature profile review completed

Surface Description: A shallow liquid pool covers most of the surface.

Date 7-8-83

Solids Level 18.0" Date 4-28-82 Method photo

Liquid Level 18.9" Date 10-30-83 Method FIC

Solids Volume 62,000 gal

Estimated Drainable Liquid Volume 2,500 gal.

Average Maximum Tank Temperature, past 6 months 71°F (1982-most recent data)

Estimated Supernatant Volume 2,500 gal.

[ ] Cost/Benefit Analysis attached

Evaluation Performed by N Bell Date 11/15/83 Checked by TDK Date 11/16/83

Disposition of Tank:

[X] Tank Interim Stabilized at 2,500 gallons of drainable liquid

[ ] Tank not Interim Stabilized; stabilization activities resumed

Approved by: Manager, TF&EPC R.A. Van Meter Date 11/16/83

Manager, TFS&O G.T. Dukelow Date 11-28-83

Program Manager R.A. Zinski Date 11-29-83

DISTRIBUTION: TF&EPC Tank File, Tank Farm Surveillance Analysis, Approval Signatures

INTERIM STABILIZATION EVALUATION - NON-JET PUMPED TANKS

(CONTINUATION PAGE)

Evaluation Calculations and Comments

TANK: 103-BX

The liquid level has been slowly rising since 1977. The baseline was changed from 16.8" to 18.6" in March 1983. The level rose from 18.3" in January to 18.9" in August. Photographs confirm the rise. The increase is believed to be from precipitation. If so, the liquid level should stabilize after isolation (scheduled under Project B-222).

Supernate Liquid = (Liquid Level-Solids Level) x 2750 gal./inch
= (18.9" - 18.0") x 2750
= 2475 gal.

Solids Volume = (Solids Level x 2750 gal./in.) + 12,500 gal.
= 18 x 2750 + 12,500
= 62,000 gal.

Drainable Interstitial Liquid = (Total Solids - Capillary Height x 2750 gal./in.) x Porosity

Tank 103-BX contains sludge, which is estimated to have a capillary height of 24" and a porosity of 0.125 DIL = (62,000 - 2750 x 24) x 0.125 = 0 by definition --- Total Drainable Liquid = DIL + Supernate = 2475 gal.

Calculation made by N E Bell

Checked by [illegible]

INTERIM STABILIZATION EVALUATION - NON-JET PUMPED TANKS

(CONTINUATION PAGE)

Evaluation Calculations and Comments

TANK: 103-BX

A worst-case assumption is that the sludge acts like salt cake, which is estimated to have a capillary height of 12" and a porosity of 0.45. For this case,

DIL = (62,000 - 12 x 2750) x 0.45 = 13,050 gal.
Total Drainable Liquid = 13,050 + 2475 = 15,525 gal.

Both the DIL and the supernate liquid are far below the criteria for pumping. The tank should be Interim Stabilized.

Calculations made by N E Bell

Checked by Tim J. Kirkpatrick

STABILIZATION EVALUATION
NON-JET PUMPED TANKS

TANK: 241-BX-104

EVALUATION (see continuation page for calculations and additional comments):

[X] Photograph review completed - Date of most recent photographs: 9-21-89

[X] Tank history review completed

[X] Tank temperature profile review completed

Surface Description: Dark brown sludge with a liquid film covering 30 to 35% of the tank surface.

Date 9-22-89

Solids Level 31.5 Date 9-22-89 Method FIC

Liquid Level 31.5 Date 9-22-89 Method FIC

Solids Volume 96,237 gallons

Estimated Drainable Liquid Remaining Volume 32,644 gallons

Average Maximum Tank Temperature, past 6 months 77°F

Estimated Supernatant Volume 2,888 gallons

[NA] Cost/Benefit Analysis attached

DISPOSITION OF TANK:

[X] Tank Interim Stabilized at 32,644 gallons of drainable liquid remaining

[ ] Tank not Interim Stabilized; stabilization activities resumed

Evaluation Performed by VC Boyle Date 9/26/89 Checked by [signature] Date 9/26/89

APPROVED BY:

Manager, Single-Shell Tanks [signature] R E Raymond Date 9/26/89

Manager, Tank Farm Programs [signature] Date 9/26/89

Manager, Tank Farms [signature] Date 9/26/89

DISTRIBUTION: SST Tank File, Tank Farm Surveillance Analysis & Support, Defense Waste Safety Section, Approval Signatures

TANK: 241-BX-104

EVALUATION CALCULATIONS AND COMMENTS:

Tank 241-BX-104 was supernatant pumped from September 17 through 19, 1989 until the pump cavitated. A total of 17,486 gallons was pumped.

Total Waste = (Solids Level) (2750) + 12,500 (Dished Bottom)
(31.5 in) (2750 gal/in) + 12,500 gallons
= 99,125 gallons

Supernatant Volume - Approximately 35% of the tank surface is liquid covered with an average depth of 3 inches.

= (0.35) (3 in) (2750 gal/in)
= 2,888 gallons

Solids Volume = Total Waste - Supernatant
= 99,125 - 2,888
= 96,237 gallons

Drainable Interstitial Liquid (DIL) = (Total Waste - 12* in X 2750 gal/in) (0.45 porosity)
= (99,125 - 33,000) (·45)
= 29,756 gallons

*Per WHC-CM-5-7, it is assumed that the bottom 12 inches of waste is non-drainable due to capillary action.

Drainable Liquid Remaining = DIL + Supernatant
= 29,756 + 2,888
= 32,644 gallons

Calculations made by VC Boyle Date 9/26/89

Checked by RT Kumar Date 9/26/89

INTERIM STABILIZATION EVALUATION
NON-JET PUMP TANKS

Tank: 105-BX

Evaluation (see continuation page for calculations and additional comments):

☒ Photograph review completed - Date of most recent photographs 8/25/86

☒ Tank History review completed

☒ Tank temperature profile review completed

Surface Description: Sludge surface with supernate approximately 1-2" deep covering 75-85% of the surface. FIC contacting solids. Solids exposed along outer surfaces Date 8/25/86

Solids Level 24.8" Date 9/2 Method FIC

Liquid Level 24.8" Date 9/2 Method FIC/PHOTO

Solids Volume 46,025

Estimated Drainable Liquid Volume 10,525

Average Maximum Tank Temperature, past 6 months 70°F

Estimated Supernatant Volume 4675 Gallons

☐ Cost/Benefit Analysis attached

Evaluation Performed by [illegible] Date 9/2/86 Checked by [illegible] Date 9/3/86

Disposition of Tank:

☒ Tank Interim Stabilized at 10,525 gallons of drainable liquid

☐ Tank not Interim Stabilized; stabilization activities resumed

Approved by: Manager, TF&EPE [illegible] Date 9/3/86

Manager, TFS&O [illegible] Date 9/3/86

Program Manager [illegible] Date 9/3/86

DISTRIBUTION: TF&EPE Tank File, Tank Farm Surveillance Analysis, Approval Signatures

EVALUATION CALCULATIONS AND COMMENTS

Tank: 105-BX - DISHED BOTTOM TANK Page 2 of 3

Volume calculations

CASS FIC READING - 24.8" - CONTACTING SOLIDS

IRREGULAR SURFACE

SUPERNATANT VOLUME

[2750 GAL/IN] [2 in] 85% = 4675 GALLONS SUPERNATE

TOTAL Volume (DISH BOTTOM)

(24.8' - 12") 2750 GAL/IN + 12,500 GALLONS = 47,700 GAL

47,700 GALLONS ASSUMES A FLAT EVEN SURFACE

SUBTRACTING SUPERNATE

47,700 - 4675 = 43,025 GAL SLUDGE

Adding for exposed solids above FIC [3000 GALLONS, ASSUME SALT CAKE]

47,700 + 3,000 GAL = 50,700 GALLONS - TOTAL WASTE

→ 43,025 GALLONS SLUDGE
→ 4,675 GALLONS SUPERNATE
→ 3,000 GALLONS SALT CAKE
→ 50,700 GALLONS TOTAL WASTE

Calculations made by: KL Mudge

Checked by: GL Jones

EVALUATION CALCULATIONS AND COMMENTS

Tank: 105-BX

Page 3 of 3

INTERSTITIAL LIQUID CALCULATION - SD-RE-TI-101

CAPILLARITY - 1 FOOT - 33,000 GALLONS

[SOLIDS VOLUME - CAPILLARY VOLUME] · POROSITY -

[46,025 GAL - 33,000 GAL] · 45% = 5900 GALLONS

→ 5900 GALLONS DRAINABLE INTERSTITIAL (DI)

TOTAL DRAINABLE = DI + SUPERNATE

= 5900 GAL + 4625 GAL

TOTAL DRAINABLE = 10,525 GALLONS

SUPERNATE PUMPING DISCONTINUED IN AUGUST 1986
15,000 GALLONS SUPERNATE REMOVED. PUMP LOWERED
AS FAR AS POSSIBLE, CANNOT REMOVE MORE SUPERNATE
WITH PUMP IN CURRENT CONFIGURATION

Calculations made by: KL Mundy

Checked by: G A Jonas

Attachment D

Interim Stabilization Evaluation of 100- & 200-Series Non-Jet-Pumped Tanks.

Page 1 of 2

TANK: 241-BX-106

EVALUATION (see continuation page for calculations and additional comments):

[X] Photograph review completed - Date of most recent photographs: 07/17/95

[X] Tank history review completed

[X] Tank temperature profile review completed

Surface Condition & Comments: Wet sludge slumping toward center of tank. Dry saltcake against tank sidewalls. Less than 200 gallons liquid surrounding submersible pump suction (suspected to be flush water and drain back). No other liquid visible.

Solids Level 9.2 inches Date 07/14/95 Method ENRAF

Liquid Level N/A Date N/A Method N/A

Solids Volume 37,600 gallons

Estimated Drainable Insterstitial Liquid Volume 0 gallons

Estimated Supernatant Volume Remaining 200 gallons

Tank was pumped with a submersible pump ___ No X Yes, 14,000 gallons pumped.

[ ] Cost/Benefit Analysis attached

DISPOSITION OF TANK:

[X] Tank Interim Stabilized at 200 gallons of supernatant and 0 gallons of drainable interstitial liquid

[ ] Tank not Interim Stabilized; continue stabilization activities

Evaluation Performed by Randy L Powers Date 07/31/95

Checked by VC Boyles Date 7/31/95

APPROVED BY:

Team Lead, Stabilization Engineer VC Boyles Date 7/31/95

Manager, Interim Stabilization Engineering Judith Bustos Date 8/1/95

Manager, E. Tank Farm Transition Project for IHW Date 8/1/95

DISTRIBUTION: Surveillance Engineering, Single Shell Tank History File, TWRS Nuclear Safety, TPA Integration Control, Approval Managers, Evaluation Performer, Team Lead and Checker signatures.

Attachment D (cont.)

Page 2 of 2

EVALUATION CALCULATIONS AND COMMENTS:

TANK: 241-BX-106

Assume:

- Tank contains sludge, 200 gallons supernatant, no saltcake (per video 07/17/95).
- waste is consistent along the surface (flat surface)

Use:

- 45% porosity per WHC-IP-0842 Section 5.2.1
- 24 inches capillary height (sludge)

Amount of waste remaining:

ENRAF reads 9.2 inches.

9.2 inches x 2750 gallons/inch = 25,300 gallons
add volume of dish bottom, + 12,500 gallons

total waste remaining = 37,800 gallons

total sludge vol. = total waste - supernatant
total sludge vol. = 37,800 gallons - 200 gallons

total sludge vol. = 37,600 gallons

Drainable Interstitial Liquid (DIL), Drainable Liquid Remaining (DLR), Pumpable Liquid Remaining (PLR):

DIL = (sludge vol. - sludge capillary height vol.) x porosity
DIL = (37,600 gal. - (24 in. x 2750 gal./in.)) x .45

DIL = 0 gallons

DLR = supernatant + DIL
DLR = 200 gallons + 0

DLR = 200 gallons

PLR = DLR - (unpumpable vol. x porosity)
PLR = 200 - (18 inches x 2750 gal./in. x .45)

PLR = 0 gallons.

Calculations made by Randy L Powers Date 07/31/95

Checked by UC Boyles Date 7/31/95

STABILIZATION EVALUATION
JET PUMPED TANKS

TANK: 107-BX

Reason Jet Pumping Halted:

[X] Meets 0.05 gpm Criteria, Date of Shutdown 9-14-90
[ ] Major Failure of Jet Pump, Date of Shutdown _____

Additional Comments: The surface is light brown, pot marked sludgy fine material with a pool of liquid located north of riser #4.
Evaluation: (See continuation page for calculations and additional comments)

Photograph review completed - Date of most recent photograph 9/11/90
Tank history review completed. [X]
Tank temperature profile reviews completed. [X]
Starting Liquid Level 130.2" Date 6/20/90

Final Liquid Level Measured After Equilibration of Interstitial Liquid:
Dip Tubes 98.6 Date 9/24/90 LOW N/A Date N/A FIC/Manual 120.7" Date 9/18/90

Total Net Jet Pump Production 23,113 gallons
Supernatant volume 600 Date 9/24/90

Calculated Solid Characteristics:

Porosity 13.2 % Permeability/viscosity (K/u) N/A
Capillary Height 24" Est. Drainable Liquid Remain. 29,330 gallons
Final Avg. Flowrate <.05 gpm Date 9/24/90

Disposition of Tank:

[X] Tank Interim Stabilized at 29,330 gallons of Drainable Liquid Remaining
23,330 ~~thousand~~ gallons of Pumpable Liquid Remaining.
[ ] Tank Not Interim Stabilized; Jet Pumping Restarted

Evaluation Performed by: VC Boyles Date 9/24/90
Checked by: R.K. Trombaugh Date 9/25/90

APPROVED BY:

Manager, Single-Shell Tanks M R Raymond Date 9-26-90
Manager, Tank Farm Programs W J Hirschenfelder Date 9-25-90
Manager, Tank Farms T B Blankenship Date 9-26-90

Distribution: SSTPE Tank History File, Defense Waste Safety, Tank Farm Surveillance Analysis & Support, Prepared by Signatures, Managers approval Signature

Page 2 of 2

TANK: 107-BX

EVALUATION CALCULATIONS AND COMMENTS:

Wt. Factor Final = 155.6 } From work package 2E-90-02996
Sp. Gravity Final = 1.46 }

Capillary ht. for sludge 24"

Starting liquid level was 130.2" measured by FIC

Final liquid level measured by dip tube = $\frac{\text{Wt. factor}}{\text{Sp. Gr.}} = \frac{155.6}{1.46} = 106.6 - 8" = 98.6$

Note: FIC zero is located on tank sidewall base and dip tube is located 8" lower than the FIC. The 8" above in the dip tube adjustment, adjusts the two readings so they are equivalent.

Supernatant Start 14,000 gallons
Supernatant Pumped 13,400 gallons
Supernatant Remaining 600 gallons
} Estimated volumes based from photos & actual pumpdown curve

Net Jet Pump Production = Gross vol. pumped − Flush water added = 23,705 − 592 = 23,113 gallons

Calculate Porosity = $\frac{\text{Net Jet Pump Volume} - \text{Pumped Supernatant}}{(\text{Starting liq. level} - \frac{\text{Pumped Supernatant}}{2750} - \text{Final liq. level})(2750)} =$

$= \frac{23,113 - 13,400 \quad (100)}{(130.2 - \frac{13,400}{2750} - 98.6)\,2750} = 13.2\%$ Porosity

Drainable Interstitial Liquid = (Final liq. level − capillary ht)(Porosity) + (Vol. in dished tank bottom)(Porosity) =
= (98.6 − 24)(2750)(.132) + 12,500 (.132) =
= 28,730 gallons (DIL)

Drainable Liquid Remaining = DIL + Supernatant Remaining = 28,730 + 600 = 29,330 gallons (DLR)

Pumpable Liquid Remaining = DLR − 6,000 = 29,330 − 6,000
= 23,330 gallons

Calculations made by VC Boyles Date 9/24/90

Checked by R.K. [illegible] Date 9/25/90

INTERIM STABILIZATION EVALUATION

TANK NUMBER: 108-BX EFFECTIVE DATE: 7-31-79

LIQUID LEVEL & RISER NO. R-8 5.0" Solids level Reading

SOLIDS LEVEL & RISER NO. R-8 5"

EST. SUPERNATE LIQUID VOLUME < 1000 gallons*

EST. DRAINABLE INTERSTITIAL LIQUID VOLUME 1000 gallons

* Best guess liquid volume is 400 gallons. The interstitial volume is based on sludge containing 12.5% drainable liquid. Also 2000 gallons have been pumped from this tank Via P-10.

TEMPERATURE: 68°F Maximum

IS THIS TEMPERATURE A PROBLEM? yes ____ no x unknown ____

IS THERE A POTENTIAL DOME LOAD PROBLEM? yes ____ no x

PHOTOGRAPH EVALUATION: (Order #771263 : LL 5" ; Date 2-7-77)

These photographs show a liquid pool approximately 25' in diameter and extremely shallow. The rest of the tank surface is damp sludge.

COMMENTS:

There is no further salt well pumping scheduled for this tank.

Advanced Stabilization Recommendation: It appears that the remaining surface liquid could be removed by air drying; therefore, air drying is recommended.

Prepared By: G. D. Mangin

Reviewed By: John W. Bailey 7-31-79

STABILIZATION EVALUATION
JET PUMPED TANKS

TANK: 109-BX

Reason Jet Pumping Halted:

[X] Meets 0.05 gpm Criteria, Date of Shutdown 8-17-90
[ ] Major Failure of Jet Pump, Date of Shutdown _____

Additional Comments: Surface is ~ 95% solids with red and white surfaces. The reddish surface appears to be pitted with fine size material

Evaluation: (See continuation page for calculations and additional comments)

Photograph review completed - Date of most recent photograph 9-11-90
Tank history review completed. [X]
Tank temperature profile reviews completed. [X]
Starting Liquid Level 56.4" Date 6/28/90

Final Liquid Level Measured After Equilibration of Interstitial Liquid:
Dip Tubes 48.1" Date 9/17/90 LOW N/A Date N/A FIC/Manual 65.7" Date 9/17/90

Total Net Jet Pump Production 8,247 gallons
Supernatant volume 400 gallons Date 9/17/90

Calculated Solid Characteristics:

Porosity	20%	Permeability/viscosity (K/u)	N/A
Capillary Height	24"	Est. Drainable Liquid Remain.	13,655
Final Avg. Flowrate	<.05gpm	Date	9/17/90

Disposition of Tank:

[X] Tank Interim Stabilized at 13,655 gallons of Drainable Liquid Remaining
7,655 ~~thousand~~ gallons of Pumpable Liquid Remaining.
[ ] Tank Not Interim Stabilized; Jet Pumping Restarted

Evaluation Performed by: VC Boyle Date 9/17/90
Checked by: [signature] Date 9/18/90

APPROVED BY:

Manager, Single-Shell Tanks [signature] Date 9/26/90
Manager, Tank Farm Programs [signature] Date 9/26/90
Manager, Tank Farms [signature] Date 9-26-90

Distribution: SSTPE Tank History File, Defense Waste Safety, Tank Farm Surveillance Analysis & Support, Prepared by Signatures, Managers approval Signature

TANK: 109-BX

EVALUATION CALCULATIONS AND COMMENTS:

	Final	Start
WT. Factor	63.5"	70.5"
Spec. Gravity	1.32	1.25

Final liquid level = $\frac{63.5''}{1.32}$ = 48.1" (Dip Tube)

Starting liquid level = $\frac{70.5}{1.25}$ = 56.4" on 6/28/90 (Dip Tube)

Supernatant at start of pumping = 5,000 gallons
Supernatant Pumped = 4,600 gallons
Supernatant Remaining = 400 gallons
} Estimated from tank photos

Net Jet Pump Production = Gross vol. pumped - Flushwater = 9,425 - 1178 = 8,247 gallons

Calculate Porosity = $\frac{\text{Net Jet Pump Volume} - \text{Pumped Supernatant}}{(\text{Starting liq level} - \text{Pumped Supernatant} - \text{Final liq. level})2750}$ =

$= \frac{8,247 - 4,600}{\left(56.4 - \frac{4600}{2750} - 48.1\right)2750} = 0.20 = 20\%$

Assume capillary ht. of 24" for sludge tanks

Drainable Interstitial Liquid = (Final liq. level - capillary ht)(porosity)
= (48.1 - 24)(2750)(.20)
= 13,255 gallons (DIL)

Drainable Liquid Remaining = DIL + Supernatant Remaining
= 13,255 + 400
= 13,655 gallons (DLR)

Pumpable Liquid Remaining = DLR - 6,000
= 13,655 - 6,000 = 7,655 gallons

Calculations made by VC Boyles Date 9/17/90

Checked by [signature] Date 9/18/90

Tank: 110-BX

Evaluation (see continuation page for calculations and additional comments):

☒ Photograph review completed - Date of most recent photographs 7-31-85

☒ Tank History review completed

☒ Tank temperature profile review completed

Surface Description: Small supernatant pool covering 15% of surface with maximum 3" liquid. Solids appear to be sludge with salt cake crystals on the surface Date 8/21/85

Solids Level 67.25 Date 7/31/85 Method Photo Observation

Liquid Level 67.25 Date 7/31/85 Method Manual Tape

Solids Volume 198,000

Estimated Drainable Liquid Volume 20,700 gal

Average Maximum Tank Temperature, past 6 months N/A

Estimated Supernatant Volume 1300 gal

☐ Cost/Benefit Analysis attached

Evaluation Performed by KK Mudge Date 8/21/85 Checked by RAV Date 8/22/85

Disposition of Tank:

☒ Tank Interim Stabilized at 20,700 gallons of drainable liquid

☐ Tank not Interim Stabilized; stabilization activities resumed

Approved by: Manager, TF&EPE [signature] Date 8/22/85

Manager, TFS&O [signature] Date 8/22/85

Program Manager [signature] Date 8/22/85

DISTRIBUTION: TF&EPE Tank File, Tank Farm Surveillance Analysis, Approval Signatures

EVALUATION CALCULATIONS AND COMMENTS

Tank: 110-BX

Page 2 of 2

Solids volume

(67.25 in · 2750 gallons/in) = 198,000 gallons

Sludge volume from tank history / SR-14

189,000 gallons

Salt Cake Volume

198,000 − 189,000 = 9,000 gallons − does not include volume of shelf

Drainable Interstitial in Sludge

(189,000 − 66,000) 0.125 = 15,375 gallons

Drainable Interstitial in Salt Cake

(9,000 gal)(0.45) = 4050 gal

Total Drainable Interstitial (DI)

15,375 + 4050 = 19,425 gallons ←

DRAINABLE TOTAL

19,425 + 1237.5 =

20,662.5 gal

Supernate volume (SUP)

0.15 (2750 gal/in) 3 in = 1237.5 gallons

Pumpable Liquid Remaining = 0 gal

Calculations made by: KL Mudge

Checked by: [signature]

Figure 2. Interim Stabilization Evaluation for Jet-Pumped Tanks
(Sheet 1 of 2)

TANK: 241-BX-111

Page 1 of 4

Reason Jet Pumping Halted:

I. [ ] Meets 0.05 gpm criteria. Date of Shutdown _____
II. [X] Major equipment failure. Date of Shutdown 02/04/95

Surface Condition & Comments:

In-tank video reveals dry saltcake slumping dramatically downward from tank sidewalls with isolated pools of semi-clear liquid within a circular area 30 foot in diameter surrounding the saltwell screen (located at tank center). Liquid depth varies from 0 to 6 inches, with an average depth of less than 3 inches. Various sized islands of saltcake deplete the liquid surface area. Estimated surface liquid volume less than 1300 gallons. Major jet pump jumper spray leak in two locations (identified by leak detection element and verified by video recording) disabled pumping equipment.

Evaluation: (See continuation page for calculations and additional comments)

Photograph review completed - Date of most recent photograph 02/28/95
Tank history review completed. [X]
Tank temperature profile reviews completed. [X]
Starting liquid level 79.75 INCHES Method MANUAL TAPE Date 10/22/93
Final liquid level (after equilibration) 21.3 INCHES Method DIP TUBES Date 02/07/95

Total Net Jet Pump Production 116,900 GALLONS
Capillary Height Used in Calculation: 12 AND 24 INCHES. (TANK CONTAINS BOTH SALTCAKE AND SLUDGE.)

Final Average Flowrate N/A
Calculated Porosity 66 %
Supernatant 1300 GALLONS
Drainable Interstitial Liquid 1300 GALLONS
Drainable Liquid Remaining 2600 GALLONS
Pumpable Liquid Remaining 1300 GALLONS

Disposition of Tank:

[X] Tank Interim Stabilized
[ ] Tank not Interim Stabilized: Jet Pumping Restarted

Evaluation Performed by: RANDY L. POWERS [signature] Date 03/13/95
Checked by: VC Boyles Date 3/13/95

APPROVED BY:*

Team Lead, Stabilization Engineering VC Boyles Date 3/13/95
Manager, Tank Stabilization & Engineering Support [signature] Date 3/13/95
Manager, SST Stabilization Program [signature] Date 3/14/95
Manager, Tank Farm Operations Judith Burton for J Wicks Date 3/14/95

Distribution: Nuclear Facility Safety, Shift/Surveillance Engineering, Systems Engineering, Single-Shell Tank History File, TPA Integration Control, Approving Managers, Evaluation Performer, and Checker signatures.

* ADDITIONAL SIGNATURES REQUIRED ON LETTER OF JUSTIFICATION.

Figure 2. Interim stabilization Evaluation for Jet-Pumped Tanks

BX-111 Waste Porosity Calculations:

NOTE - All volumes are rounded to the nearest 100 gallons.

Inches of supernatant removed:
manual tape reading at start of pumping..... 79.75 inches
interstitial liquid level*..... 68.0 inches
inches of supernatant removed..... 11.75 inches

Volume supernatant removed:
11.75 inches x 2750 gallons/inch..... 32,300 gallons

Interstitial removed:
total liquid pumped to date..... 116,900 gallons
volume supernatant removed..... 32,300 gallons
total interstitial removed..... 84,600 gallons

Theoretical equivalent interstitial liquid removed at 100% porosity:
interstitial liquid level..... 68.0 inches
dip tube liquid level reading at conclusion of pumping..... 29.3 inches
adjusted liquid level reading**..... 21.3 inches
equivalent interstitial liquid removed = 68.0 - 21.3..... 46.7 inches
volume interstitial removed at 100% porosity =
46.7 inches x 2750 gallons/inch..... 128,400 gallons

Porosity is the ratio of the total interstitial removed to the theoretical equivalent interstitial liquid removed at 100% porosity:

porosity = 84,600 gallons/128,400 gallons..... 0.66 porosity

waste porosity = 66%

* last manual tape reading providing supernatant data is the assumed interstitial liquid level. (to be used in subsequent calculations.)

** dip tubes are 8 inches deeper than manual tape "zero" reading so 8 inches was subtracted from the liquid level reading.

Evaluation Performed By: RANDY L. POWERS Randy L Powers Date 03/13/95

Checked By: VC Boyles Date 3/13/95

Figure 2. Interim stabilization Evaluation for Jet-Pumped Tanks

BX-111 DIL, DLR, PLR calculations:

NOTE - Technical definitions can be found in WHC-IP-0842 Section 7.2.

NOTE - All volumes are rounded to the nearest 100 gallons.

Assume sludge, saltcake, and supernatant remain in the tank.

Volume of waste remaining in tank (saltcake, sludge):
adjusted liquid level (see porosity calculations)..... 21.3 inches

volume below 21.3 inches = 21.3 inches x 2750 gallons/inch..... 58,500 gallons
BX-111 has a 12,500 gallon heal..... 12,500 gallons
volume of waste remaining in tank (saltcake, sludge)..... 71,000 gallons

Individual volumes:
sludge volume (ref. WHC-EP-0182-81, 12/31/95)..... 68,000 gallons

saltcake volume = 71,000 gallons - 68,000 gallons..... 3,000 gallons

Sludge DIL, DLR, PLR:
sludge DIL = (sludge volume - sludge capillary height vol.) x porosity
= (68000 - (4 inches x 2750 gal./inch)) x .66..... 1300 gallons

sludge DLR = supernatant + DIL = 1300 + 1300..... 2600 gallons

sludge PLR = DLR - (heal x porosity)
= 2600 - ((18 x 2750) x .66)..... 0 gallons

Saltcake DIL, DLR, PLR:
saltcake DIL = (saltcake volume - saltcake capillary height vol.) x porosity
= (3000 - (12 inches x 2750 gal./inch)) x .66..... 0 gallons

saltcake DLR = supernatant + DIL = 1300 + 0..... 1300 gallons

saltcake PLR = DLR - (heal x porosity) = 1300 - (18 x 2750) x .66....0 gallons

Totals:

DIL = sludge DIL + saltcake DIL = 1300 + 0..... 1300 gallons

DLR = sludge DLR + saltcake DLR = 2600 + 0..... 2600 gallons

PLR = sludge PLR + saltcake PLR + supernatant
= 0 + 0 + 1300..... 1300 gallons

Evaluation Performed By: RANDY L. POWERS Randy L. Powers Date 3/13/95

Checked By: VC Boyles Date 3/13/95

Interim Stabilization Evaluation for Jet-Pumped Tanks

Letter of Justification for Declaring 241-BX-111 Stabilized

Tank BX-111 has been subject to saltwell pumping since it was declared an Assumed Re-leaker in April 1993. Over 116,000 gallons of liquid waste was removed from the tank prior to a major equipment failure which halted pumping on February 4, 1995. It has been determined that there is approximately 1300 gallons of pumpable liquid remaining in the tank. This remaining liquid is contained on a solid waste surface in a pocket of saltcake at the center of the tank -- It does not impose a threat of leakage into the environment.

It is not economically practical to replace the failed equipment and remove the remaining liquid. It is estimated that it would cost over $40,000 to repair the equipment, and disposal costs for the failed components would be significant. The tank currently meets the established criteria for declaring Single-Shell Tanks interim stabilized as mandated by the Tank Farms Interim Stabilization Evaluation Procedure, WHC-IP-0842 Section 7.2.

In addition, the equipment failure resulted in contamination spread in the saltwell pump pit. Replacement of the failed equipment would subject workers to exposures to high level radioactive waste, which is not compliant with ALARA principles.

This letter of Justification concludes the requirements for declaring Tank 241-BX-111 Interim Stabilized.

Required Signatures:

R. E. Raymond, Manager Waste Tank Plant Engineering

Signature R E Raymond Date 3/14/95

D. M. Lucoff, Manager TWRS Operations Program

Signature DM Lucoff Date 03/14/95

J. L. Lee, Director TWRS Plant

Signature JLLee Date 3/15/95

STABILIZATION EVALUATION
JET PUMPED TANKS

TANK: 112-BX

Reason Jet Pumping Halted:

[X] Meets 0.05 gpm Criteria, Date of Shutdown 8-17-90
[ ] Major Failure of Jet Pump, Date of Shutdown _____

Additional Comments: Bend of liquid running across tank. Solids are brownish in color and looks like a mud flat

Evaluation: (See continuation page for calculations and additional comments)

Photograph review completed - Date of most recent photograph 9/11/90
Tank history review completed. [X]
Tank temperature profile reviews completed. [X]
Starting Liquid Level 57.7" Date 7/5/90

Final Liquid Level Measured After Equilibration of Interstitial Liquid:
Dip Tubes 48.6" Date 9/17/90 LOW N/A Date N/A FIC/Manual 55.3" Date 9/17/90

Total Net Jet Pump Production 4,143 gallons
Supernatant volume 1,300 gallons Date 9/11/90

Calculated Solid Characteristics:

Porosity 8.5%
Capillary Height 24"
Final Avg. Flowrate <.05 gpm
Permeability/viscosity (K/u) N/A
Est. Drainable Liquid Remain. 8,100 gallons
Date 9/17/90

Disposition of Tank:

[X] Tank Interim Stabilized at 8,100 gallons of Drainable Liquid Remaining & 2,100 ~~thousand~~ gallons of Pumpable Liquid Remaining.
[ ] Tank Not Interim Stabilized; Jet Pumping Restarted

Evaluation Performed by: VC Boyles Date 9/17/90
Checked by: [signature] Date 9/18/90

APPROVED BY:

Manager, Single-Shell Tanks [signature] Date 9-26-90
Manager, Tank Farm Programs [signature] Date 9-19-90
Manager, Tank Farms [signature] Date 9-26-90

Distribution: SSTPE Tank History File, Defense Waste Safety, Tank Farm Surveillance Analysis & Support, Prepared by Signatures, Managers approval Signature

TANK: 112-BX

EVALUATION CALCULATIONS AND COMMENTS:

Wt. Factor (Final) 65.7" Capillary ht. for sludge 24"
Spec. Gravity (Final) 1.16

Starting liquid level was 57.7" measured by FIC

Final liq. level measured by dip tube = $\frac{65.7"}{1.16}$ = 56.6" - 8" = 48.6"

Note: The 8" dimension adjusts the zero point on the FIC and dip tubes together. FIC zero is located at the tank sidewall base and the dip tube zero is located 8" lower within 4" of the tank dished bottom.

Supernatant at start = 3,500 gallons
Supernatant Pumped = 2,200 gallons
Supernatant Remaining = 1,300 gallons
} Estimated volumes based from photos

Net Jet Pump Production = Gross vol. pumped - Flush water = 4,723 - 580 = 4,143 gallons

Calculated Porosity = $\frac{\text{Net Jet Pump Volume} - \text{Pumped Supernatant}}{(\text{Starting liq. level} - \text{Pumped Supernatant} - \text{Final liq. level})(2750)}$ =

$$= \frac{4,143 - 2,200}{\left(57.7 - \frac{2200}{2750} - 48.6\right)(2750)} = .085 = 8\tfrac{1}{2}\%$$

Drainable Interstitial Liquid = (Final liq. level - capillary ht)(Porosity) + (Volume in dished bottom)(Porosity) =
= (48.6 - 24)(2750)(.085) + 12,500(.085)
= 6,800 gallons (DIL)

Drainable Liquid Remaining = DIL + Supernatant = 6,800 + 1,300 = 8,100 gallons (DLR)

Pumpable Liquid Remaining = DLR - 6,000 = 2,100 gallons

Calculations made by VC Boyles Date 9/17/90
Checked by [signature] Date 9/18/90

INTERIM STABILIZATION EVALUATION - JET PUMPED TANKS

Tank: 101-BY

Reason Jet Pumping Halted:

[X] Meets 0.05 gpm Criteria, Date of Shutdown 1-28-84

[ ] Major Failure of Jet Pump, Date of Shutdown _____

Additional Comment:

Evaluation: (See Continuation Sheet for calculations and additional comment)

Starting Liquid Level 162" Date 4-28-83

Supernatant Volume 0 gallons Date 4-28-83

Final Liquid Level Measured After Equilibration of Interstitial Liquid:

Dip Tubes 30.7" Date 4-27-84

LOW _____ Date _____

Manual _____ Date _____

Total Net Jet Pump Production 35,785 gallons

Calculated Solid Characteristics:

Porosity 0.099

Permeability/Viscosity (K/N) –

Capillary Height 12" (assumed)

Estimated Drainable Liquid Remaining 5100 gallons

Final Average Flowrate 0.039 gpm Date 1-26-84

Evaluation Performed by Nancy E Bell Date 5-17-84

Evaluation Checked by ROBERT VAN MEEK Date 5-17-84

Disposition of Tank:

[X] Tank Interim Stabilized at 5.1 thousand gallons of Drainable Liquid
0 thousand gallons of Pumpable Liquid

[ ] Tank Not Interim Stabilized; Jet Pumping Restarted

Approval By: Manager, TF&EPC RAU [signature] Date 5/15/84

Manager, TFS&O [signature] Date 5-16-84

Program Manager [signature] Date 5-22-84

DISTRIBUTION: TF&EPC Tank File, HS&E Surveillance Analysis, Approval Signatures

INTERIM STABILIZATION EVALUATION - JET PUMPED TANKS

(CONTINUATION PAGE)

Evaluation Calculations and Comments

TANK: 101-BY

Current Liquid Level

Date	Weight Factor	Specific Gravity	Liquid Level
4-27-84	37.6	1.41	30.7
5-4	38.6	1.48	30.1
5-11	38.2	1.44	30.5

$$\text{Liquid Level} = \frac{\text{Weight Factor}}{\text{Specific Gravity}} + 4'' = 30.7''$$

Starting Liquid Level = 162"

Starting Supernatant = 0 gallons

Total Net Production = 35,785 gal.

$$\text{Porosity} = \frac{\text{Production}}{(\text{Starting LL} - \text{Current LL}) \times 2750 \text{ gal/in.}} = \frac{35,785}{(162-30.7) \times 2750} = 0.099$$

Drainable Interstitial Liquid (DIL) = (Current Liquid Level − Capillary Height) × 2750 gal/in. × Porosity

For saltcake, assume 12" capillary height.

DIL = (30.7 − 12) × 2750 × 0.099 = 5091 gallons

Pumpable Interstitial Liquid = 0 by definition

Total Drainable Liquid = Supernatant + DIL = 5091

Total Pumpable = Supernatant + PIL = 0

Final Average Flowrate = 0.039 gpm

Final Flowrate at Shutdown = 0.0052 gpm

Calculations by Nancy J Bell Date 5-17-84 Checked by R A Van Note Date 5/17

Figure 2. Interim Stabilization Evaluation
(Sheet 1 of 2)

TANK: 241-BY-102

Page 1 of 3

Reason Jet Pumping Halted:

I. [✓] Meets 0.05 gpm criteria, Date of Shutdown 03/27/95
II. [ ] Major equipment failure, Date of Shutdown _____

Surface Condition & Comments:
Dry, slumping saltcake with no visible liquid.

Evaluation: (See continuation page for calculations and additional comments)

Photograph review completed - Date of most recent photograph 4/11/95 VIDEO
Tank history review completed. [✓]
Tank temperature profile reviews completed. [✓]
Starting liquid level 166½ INCHES Method MANUAL TAPE Date 06/12/91
Final liquid level (after equilibration) 30.8 INCHES Method DIP TUBES Date 03/28/95

Total Net Jet Pump Production 158,800 GALLONS
Capillary Height Used in Calculation: 12 INCHES

Final Average Flowrate 0.03 GPM
Calculated Porosity 26 %
Supernatant 0 GALLONS
Drainable Interstitial Liquid 11,000 GALLONS
Drainable Liquid Remaining 11,000 GALLONS
Pumpable Liquid Remaining 0 GALLONS

Disposition of Tank:

[✓] Tank Interim Stabilized
[ ] Tank not Interim Stabilized; Jet Pumping Restarted

Evaluation Performed by: Randy L Powers Date 04/25/95
Checked by: VC Boyles Date 4/25/95

APPROVED BY:

Team Lead, Stabilization Engineering VC Boyles Date 4/25/95
Manager, Tank Stabilization & Engineering Support [signature] Date 4/26/95
Manager, SST Stabilization Program [signature] Date 4/26/95
Manager, Tank Farm Operations [signature] for J. Wicks Date 4/27/95

Distribution: Nuclear Facility Safety, Shift/Surveillance Engineering, Systems Engineering, Single-Shell Tank History File, TPA Integration Control, Approving Managers, Evaluation Performer, and Checker signatures.

Figure 2. Interim Stabilization Evaluation for Jet-Pumped Tanks

NOTE - All volumes are rounded to the nearest 100 gallons.

BY-102 Waste Porosity Calculations:

NOTE - Porosity calculations performed on most recent data. (From 2nd major pumping campaign, 5/30/94 - 3/27/95.)

Dip Tube readings 9/22/94:

high..... 80.9 inches
medium..... 67.2 inches
SP.G. = (80.9 - 67.2) / 10..... 1.37 SP.G.
adjusted liquid level = 80.9 / 1.37..... 59.0 inches

Dip Tube readings 3/28/95:

high..... 57.0 inches
medium..... 38.5 inches
SP.G. = (57.0 - 38.5) / 10..... 1.85 SP.G.
adjusted liquid level = 57.0 / 1.37..... 30.8 inches

Volume pumped between 9/22/94 and 3/28/95..... 20,200 gallons

Theoretical equivalent interstitial liquid
removed at 100% porosity = 59.0 - 30.8..... 28.2 inches
volume interstitial removed at 100% porosity =
28.2 inches x 2750 gallons/inch..... 77,700 gallons

Porosity is the ratio of the total interstitial removed to the theoretical equivalent interstitial liquid removed at 100% porosity:

porosity = 20,200 gallons/77,700 gallons..... 0.26 porosity

waste porosity = 26 %

Evaluation Performed By: Randy L Powers Date 4/25/95

Checked By: VC Boyles Date 4/25/95

Figure 2. Interim Stabilization Evaluation for Jet-Pumped Tanks

BY-102 DIL, DLR, PLR calculations:

Assume - Saltcake and Supernatant remain in the tank.

Volume of waste remaining in tank:
adjusted liquid level (see porosity calculations)..... 30.8 inches
add 4 inches, dip tubes are 4 inches above tank bottom..... 34.8 inches
subtract 12 inches for dish bottom (compensate below)..... 22.8 inches
convert to gallons, 22.8 x 2750 ..... 62,700 gallons
add 12,500 gallons to compensate for dish bottom..... 12,500 gallons
volume of waste remaining in tank..... 75,200 gallons

DIL, DLR, PLR:
DIL = (saltcake volume - saltcake capillary height vol.) x porosity
= ((75,200 - (12 inches x 2750 gal./inch)) x .26..... 11,000 gallons

DLR = supernatant + DIL = 0 + 11,000 ..... 11,000 gallons

PLR = DLR - (unpumpable volume x porosity) =
11,000 - (18 inches x 2750 gal./in x .26).... ..... 0 gallons

Evaluation Performed By: Lanty L Powers Date 4/25/95

Checked By: VC Boyles Date 4/25/95

Attachment D

Single-Shell Tank Interim Stabilization Evaluation Form

TANK: 241-BY-103

Reason Jet-Pumping Halted:

[] Meets 0.05 gpm criteria, Date of Shutdown _____
[X] Major equipment failure, Date of Shutdown 9/28/97

Surface Condition & Comments:

No surface liquid is visible on intank video taken 2/24/97. See discussion section c.

Evaluation: (See continuation page for calculations and additional comments)

	Photograph review completed -Date of most recent photograph 2/24/97 (video)
	Tank history review completed. [X]
	Tank temperature profile reviews completed. [X]
(Jet)	Starting Liquid Level 181 in Method LOW Date 3/31/87
	Final liquid level 108 in Method LOW Date 11/17/97
(All exc. Aux)	Total Net Pumped Volume 95.9 Kgal
(Jet)	Capillary Height Used in Calculation 12 in
	Final Solids Volume 414.0 Kgal
(Jet)	Final Average Flowrate .14 - .33 gpm (see section b details)
(Jet)	Calculated Porosity .13
	Supernatant 0 Kgal
(All exc. Aux)	Drainable Interstitial Liquid 38.3 Kgal
(All exc. Aux)	Drainable Liquid Remaining 38.3 Kgal
(All exc. Aux)	Pumpable Liquid Remaining 31.9 Kgal
(Jet & Aux)	[X] Justification letter attached

Disposition of Tank:

[X] Tank Interim Stabilized
[ ] Tank Not Interim Stabilized; Restart Pumping

Evaluation Performed by: (L.F. Dougherty) L.F. Dougherty Date 11/24/97

Checked by: (M.R. Koch) Michael R. Koch Date 11/24/97

APPROVED BY:

Team Lead, Stabilization (M.R. Koch) Michael R. Koch Date 11/24/97

Manager, Stabilization (D.J. Saueressig) D.J. Saueressig Date 11/24/97

Manager, ~~WTP~~ SST Engineering (J.L. Homan) R.L. Jansen for Date 11/24/97

Manager, ~~WTP~~ SST Transition Project (C.B. Bryan) C.B. Bryan Date 11/24/97

Manager, Tank Waste Operations (M.P. Delozier) M.P. Delozier Date 11-24-97

Distribution: TWRS Nuclear Safety, Surveillance Engineering, Systems Engineering, Single Shell Tank History File, TPA Integration Control, Approving Managers, Evaluation Performer, Team Lead, and Checker signatures.

Attachment D (cont.)

EVALUATION CALCULATIONS AND COMMENTS:
(ref. WHC-IP-0842, Vol. IV, Section 4.1 for stabilization evaluation steps)

a. Pumping Background and Post Pumping Observations:

Saltwell Jet Pumping first began on tank 241-BY-103 on 3/31/87. Pump failure occurred on 9/8/87. Total pump production was 78.5 K gal with an average flowrate reported at .1 gpm.

Documentation indicates the tank apparently met stabilization criteria but was not declared stabilized because an intrusion between 1980 and 1986 of approximately one inch per year had never been resolved. Various intrusion prevention steps had been taken before pumping began but existence of an intrusion source was never confirmed and prevented declaring the tank stabilized in 1987.

In 1989 another effort to declare the tank stabilized resulted in discovering that the saltwell diptube levels had risen and therefore the decision to continue pumping BY-103 was made. A new pump was installed in 1990 but pumping was again delayed.

Operations resumed on 8/5/95 with approximately 17 K gal pumped until 10/20/95 when activities were stopped as a result of the flammable gas USQ. Shutdown of the pump and associated delays as a result of the flammable gas issue resulted in a blockage forming in the transfer line (SN-200). While the tank contained less than 50 kgal pumpable liquid remaining, and no visible supernatant, a stabilization evaluation was not performed. No major equipment failure had been identified, and the flow rates were in excess of .05 gpm.

In 1997, the flammable gas USQ was addressed via standing order TF-97-001. The decision was made to clear the transfer line blockage and proceed with pumping BY-103. Clearing the blockage was considered important because the future pumping of tanks BY-105 and BY-106 also required the use of the SN-200 transfer line. Attempts to remove the blockage failed. A plan was developed to cut and tie into a parallel transfer line (SN-207) in an attempt to bypass the blockage. However the pressure test of the SN-200 section required for tie-in to BY-103 failed. Leak identification equipment identified at least one leak located on the line connecting BY-103 to the main transfer line.

A flexible double encased overground transfer line was installed from BY-103 to the direct buried line (SN-207) at the location previously cut. Pump prime/flush operations were performed prior to start-up. Upon start-up (9/28/97) the pump motor casing leaked constituting major equipment failure.

b. Review of Jet Pump production data:

Pump Rates:

1989 ending pump rates: ~.10 gpm, total production 78.5 Kgal
1995 ending pump rates: ~.25 gpm, total production 17.4 Kgal

c. Review of in tank photos/videos:

A review of past pumping data produced documentation dated 9/19/89 which states:

> "Evaluation of the in-tank photographs taken 241-BY-103 has been completed. Photographs taken on 9/7/89 were compared to two previous sets taken 7/28/87 and 12/16/88. There has been no apparent change in the surface conditions in this tank since 1987. The surface is dry with no visible pools.... Single Shell Tank Process Engineering can see no evidence of an ongoing intrusion in the photographs of BY-103."

An in tank video taken 2/24/97 revealed no visible surface liquid. The waste surface was dry and flaky. Dried, caked waste was suspended from many of the pipes and pieces of process equipment. The overall surface of the waste seemed to slump slightly towards the center of the tank. The waste surface at the edge of the tank was higher due to "piles" of dried flaky waste. It appears that the waste clung to the walls of the tank as the tank was emptied and then fell to the waste surface in piles at the edge of the tank.

The area around the saltwell screen was sunken compared with the surrounding waste. Past saltwell pumping efforts presumably caused the area around the screen to slump as interstitial liquid was removed. Again, no supernatant was observed, and there was no indication of an intrusion.

d. Interstitial Liquid level reading:

241-BY-103 has an LOW installed and neutron Interstitial Liquid Level monitoring readings indicate that the interstitial liquid level has dropped twice corresponding to both saltwell jet pumping campaigns. In 1987 the level dropped from ~181 inches to ~141 inches. In 1995 the interstitial liquid level dropped from ~141 inches to ~99 inches. From 1995 to 1997 the interstitial liquid level remained relatively constant when in 1997 it began to rise as result of flushwater additions from attempts to clear the line blockage. The current level of the Interstitial liquid level is ~108 inches.

Surface level monitoring indicates a steady rise during the intrusion years up to a maximum of ~181 inches in 1987 (similar to the interstitial liquid level readings). After the first saltwell jet pumping campaign in 1987, the surface level dropped to ~153 inches (~12 inches above the interstitial level). After the second saltwell jet pumping campaign in 1995, the surface level readings show an increase from ~148 to ~158 inches. However the true waste level is unchanged as surface level was monitored by a manual tape until 1995 when it was replaced with an FIC. The FIC was re-baselined from the bottom of the tank when installed which accounts for the 12 inch increase in waste level. The FIC has since been replaced with an ENRAF. The current waste level of ~158 inches is ~50 inches above the current interstitial level of ~108 inches.

For the purpose of porosity measurements, saltwell dip tube readings were used to estimate Interstitial Liquid Level readings after saltwell pumping in 1995.

- Starting Interstitial Liquid Level
  (Dip tube readings on 8/11/95; (Weight Factor % = 27.5%, S.G.= 1.29)
  = 27.5%(500 in) = 137.5 in. unadjusted
  = 137.5 in. / 1.29
  = 106.6 in. Adjusted Liquid Level

- Ending Interstitial Liquid Level
  (Dip Tube readings on 10/31/95; (Weight Factor % = 13.5%, S.G.= 1.18)
  = 13.5%(500 in) = 67.5 in. unadjusted
  = 67.5 in. / 1.18
  = 57.2 in. Adjusted Liquid Level

- Current Interstitial Liquid Level
  (Dip Tube readings on 11/14/97; (Weight Factor % = 28%, S.G.= 1.22)
  = 28%(500 in) = 140 in. unadjusted
  = 140 in. / 1.22
  = 115 in. Adjusted Liquid Level

- 4" is added to the calculated interstitial level by diptube to account for the elevation of the diptubes off of the tank bottom.

Current Interstitial Liquid Level = 115 in. + 4 in. = 119 in.

e. Solid Waste Level Estimate:

The current ENRAF waste level is ~158 inches. Final solids volume is therefore calculated to be:

<u>Final Solids Volume</u> = (Surface Level - Tank Bottom Dish Height) * (Volume per inch of Tank) + Dish Volume
= (158 in. - 12 in.) * (2750 gal/in.) + 12,500 gal
= 414,000 = 414.0 Kgal

f. Tank Waste Calculations:

<u>Drainable Liquid Remaining</u> = (Current Interstitial Liquid Level - Capillary Height) * (2750 gal/in) * (Porosity) + Current Supernatant.

where • <u>Porosity</u> = (Net Jet Pump Production - Starting Supernatant) / [(Starting Interstitial Liquid Level - Supernatant/2750 gal/in.- Current Interstitial Liquid Level)* 2750 gal/in.]

- Net Jet Pump Production (from 8/5/95 to 10/20/95) = ~17.4 Kgal
- Starting Supernatant = 0 Kgal

- Starting Interstitial Liquid Level = 106.6 in.
- Ending Interstitial Liquid Level = 57.2 in

- Porosity = (17.4 Kgal - 0)/[(106.6 in - 57.2 in)* 2750 gal/in] = .13
- Capillary Height = 12 in.
- Current Supernatant = 0

Therefore:

Drainable Liquid Remaining = (119.0 in - 12 in) * (2750 gal/in) * .13 + 0
= 38,252 gal = 38.3 Kgal

Drainable Interstitial Liquid = Drainable Liquid Remaining - Current Supernate
= 38.3 Kgal - 0 gal = 38.3 Kgal

Pumpable Liquid Remaining = Drainable Liquid Remaining - [18*(2750)*(Porosity)]
= 38.3 Kgal - [18 in *(2750 gal/in)*(.13)]
= 31,865 gal = 31.9 Kgal

A relatively small quantity (< 2 K gal) of flushwater was added back into BY-103 from drain back operations associated with attempting to remove the line blockage and pressure testing the overground transfer line. This amount is included in the remaining liquid calculations, and is believed to account for the difference between the final interstitial diptube reading of 115" and the LOW reading of 108". The flush water is believed to be concentrated in the waste around the point of addition (the saltwell screen). The LOW reading is taken at a point closer to the edge of the tank. It is expected that over time, these two levels would approach each other as the liquid is dispersed more uniformly throughout the tank. However, the current diptube level provides a more conservative estimate for stabilization purposes and therefore, this number is used.

g. Tank History and Temperature Review:

BY-103 contains non-complexant waste, is an assumed leaker, is classified as Facility Group 3 under the BIO, is not on a Watch List, and is a Low Heat Tank (i.e., < 40,000 BTU/hr). Temperature readings taken on BY-103 indicate slowly declining temperature overall and seasonal fluctuation with a current maximum temperature of ~79 degrees F.

h: Intrusion Status Summary:

There is no current indication of intrusion into tank 241-BY-103.

i. Stabilization Evaluation Signatures:

See page 1 for Signatures.

j. Major Equipment Failure:

See next page.

Letter of Justification for Declaring 241-BY-103 Interim Stabilized

Saltwell Jet Pumping first began on tank 241-BY-103 on 3/31/87. Pump failure occurred on 9/8/87. Total pump production was 78.5 K gal with an average flowrate reported at .1 gpm.

The pump was replaced and operations resumed on 8/5/95 with approximately 17.4 K gal pumped until 10/20/95 when activities were stopped as a result of the flammable gas USQ. Shutdown of the pump and associated delays as a result of the flammable gas issue resulted in a blockage forming in the transfer line (SN-200).

In 1997, the flammable gas USQ was addressed via standing order TF-97-001. The decision was made to clear the transfer line blockage and proceed with pumping BY-103. Clearing the blockage was considered important because the future pumping of tanks BY-105 and BY-106 also required the use of the SN-200 transfer line. Attempts to remove the blockage failed. A plan was developed to cut and tie into a parallel transfer line (SN-207) in an attempt to bypass the blockage. However the pressure test of the SN-200 section required for tie-in to BY-103 failed. Leak identification equipment identified at least one leak located on the line connecting BY-103 to the main transfer line.

A flexible double encased overground transfer line was then installed from BY-103 to the direct buried line (SN-207) at the location previously cut. Pump prime/flush operations were performed prior to start-up. Upon start-up (9/28/97) the pump leaked constituting major equipment failure.
A flushing operation monitored by in-pit video equipment revealed the source of the leak to be from the pump motor casing, which would constitute a pump changeout to repair.

In order for the tank to be declared stabilized the following criteria must be met:

1. The tank contains < 50 kgal drainable fluid
   (Based on diptube interstitial level the tank contains ~38.3 Kgal);

2. The tank contains < 5 Kgal of supernatant
   (Tank has 0 Kgal Supernatant);

3. The tank inflow rate to the saltwell screen < .05 gal/min on a major equipment failure occurs with conditions 1 and 2 satisfied.
   (Last recorded flowrate > .05 gal/min however major equipment failure occurred).

Therefore tank 241-BY-103 meets the criteria for interim stabilization. Because of the low level of pumpable liquid remaining (~38.3 Kgal), it is not advisable to incur further expense or exposure to install a third pump to reduce the inventory of drainable liquid. Engineering recommends that Tank 241-BY-103 be declared interim stabilized.

Evaluation Performed by [signature] Date 11/24/97
Checked by [signature] Date 11/24/97

INTERIM STABILIZATION EVALUATION - JET PUMPED TANKS

Tank 104-BY

Reason Jet Pumping Halted:
Meets 0.05 gpm Criteria, date of shutdown 11/1/84
Major Failure of Jet Pump, date of shutdown _____

Additional Comments:

Evaluation: (see Continuation Sheet for calculations and additional comment)

Starting Liquid Level 7.5 ft Date 4/20/83
Supernatant Volume 315,000 gallons Date 4/20/83

Final Liquid Level measured after equilibration of Interstitial Liquid:

Dip Tubes 48.4 inches Date 1/23/85
LOW N/A Date —
Manual N/A Date —

Total Net Jet Pumped Production 329,500 gallons

Calculated Solid Characteristics:

Porosity .45 (assumed for saltcake)
Permeability/Viscosity (K/N) N/A
Capillary Height 12"-saltcake 24"-sludge (assumed)

Estimated Drainable Liquid Remaining 17,800 gallons
Final Average Flowrate .03 gpm Date 11/1/84
Evaluation performed by J Stan Hill Date 1/23/85

Disposition of Tank

Tank Interim Stabilized at 17.8 thousand gallons of Drainable Liquid
0 thousand gallons of Pumpable Liquid

Tank not Interim Stabilized; Jet Pumping restarted _____

Approved by: Manager, TF&EPC RAV [signature] Date 1/25/85
Manager, TFS&O [signature] Date 1-25-85
Program Manager [signature] Date 1-25-85

DISTRIBUTION: TF&EPC Tank File, HS&E Surveillance Analysis, Approval Signatures

Figure 2 (cont'd.)

Evaluation Calculations and Comment

Tank: 104 BY

$$L.L. = \frac{W.F.}{(W.F. - SpG)/10} = \frac{92}{(92-73)/10} = 48.4 \text{ inches}$$

Per SR-14 : 40,000 gallons of sludge

$$\text{Inches} = \frac{(\text{Volume} - 12500)}{2750} + 12 = \frac{(40000 - 12500)}{2750} + 12 = 22 \text{ inches of sludge}$$

48.4 in − 22 in = 26.4 inches of saltcake

Drainable Interstitial in saltcake = [(26.4)(2750) − 33000] .45 ≈ 17800 gallons

Drainable Interstitial in sludge = [(22)(2750) − 66000] .125 = 0 gallons
(all retained within capillary height for sludge)

Total Drainable Interstitial Remaining = 17,800 gallons

Total Pumpable Remaining = (17,800 − 22500) = 0 gallons

Calculations made by: J Stan Hill

Checked by: T S Vail

Single-Shell Tank Interim Stabilization Evaluation Form

TANK: **241-BY-105**

(Jet Pumping only) Reason for stopping jet pumping:

[x] Meets 0.05 gpm criteria, Date of Shutdown ____9/11/02_____

[ ] Major equipment failure, Date of Shutdown _____

Tank Waste Surface Level Condition and Comments: _____ SEE DESCRIPTION PAGE 2 _____

Evaluation: (See continuation page for calculations and additional comments)

Photo/video review completed - Date of most recent photo/video _____01/05/03_____

[x] Tank history, temperature profile and intrusion reviews completed and no anomalies identified

Starting Liquid Level ___ 170.8" _____ Method ____MANUAL TAPE_____ Date ___07/12/01___
Final liquid level _____ 93.7" _____ Method _____DIP TUBES_____ Date ___03/03/03___
Total Net Pumped Volume ____45.4 Kgal____
Capillary Height Used in Calculation ___0"____
Final Solids Volume _____481.0 Kgal_____
Final Average Inflow rate _____0.009 gpm____
Calculated Porosity _____0.204 _____
Supernatant Volume Remaining ____ 0 gal ___
Drainable Interstitial Liquid _____46.8 Kgal____
Drainable Liquid Remaining ____46.8 Kgal____
Pumpable Liquid Remaining ____41.8 Kgal____

[ ] Justification letter attached (Interim Stabilization System Engineer)

Disposition of Tank:

[x] Tank Interim Stabilized
[ ] Tank Not Interim Stabilized; Re-start Pumping

Evaluation prepared by SST System Engineer: R.E. Heath Date 3/7/03

Evaluation checked by Process Control Engineer: _____ Date _____

Interim Stabilization System Engineer: _____ Date 3/7/2K3

APPROVED BY:

Manager, Interim Stabilization Engineering T.W. Vorner Date 3/7/03

Manager, Process Engineering V.C. Boyles Mallinckrodt 3/7/03 Date 3/7/03

Manager, SST Engineering _____ Date 3/7/03

Single-Shell Tank Interim Stabilization Evaluation Form (cont.)

EVALUATION CALCULATIONS AND COMMENTS:

TANK: **241-BY-105**

OBJECTIVE/PURPOSE:

This Single-Shell Tank Interim Stabilization Evaluation provides the data and supporting calculations involved in declaring single-shell waste storage tank 241-BY-105 interim stabilized. The criteria to declare 100-series jet-pumped single-shell waste storage tanks to be interim stabilized for interim stabilization are: 1) the tank contains less than 50,000 gallons of drainable interstitial liquid (DIL), 2) the tank contains less than 5,000 gallons of supernatant, and 3) the measured maximum pump-out or in-flow rate is less than 0.05 gallons per minute. In the event of major equipment failure, Criteria 3 may be waived with a letter of justification and management approval.

ANALYSIS METHOD:

The analysis method used for this evaluation relied upon the criteria and equations established in HNF-2978, Rev. 4, *Updated Pumpable Liquid Volume Estimates and Jet Pump Durations for Interim Stabilization of Remaining Single-Shell Tanks*. Calculations presented will utilize the dip tube basis method presented in RPP-5556, Rev. 0, *Updated Drainable Interstitial Liquid Volume Estimates for 119 Single-Shell Tanks Declared Stabilized*. For dip tube basis calculations, this method assumes a zero inch height of capillary liquid retention in the solid waste matrix, as the dip tubes are not in direct contact with the solid waste volume of the tank. See the **Calculations** section for equation definitions.

This evaluation follows the applicable guidelines of the *Engineering Calculations* procedure, HNF-IP-0842, Volume IV, Section 3.6, for Non-Design Baseline Calculations and the technical basis and formatting requirements of *Tank Farm Facility Interim Stabilization Evaluation* procedure, HNF-IP-0842, Volume IV, Section 4.1. When complete, this evaluation will be formally released as part of a direct revision to HNF-SD-RE-TI-178, *Single-Shell Tank Leak Stabilization Record*. Additionally, the calculations and tank waste descriptions used in this analysis method are for the end state of saltwell pumping of tank 241-BY-105.

TANK WASTE DESCRIPTION:

The following description was obtained by in-tank video taken 01/05/03. The surface of 241-BY-105 is a rough, yellowish brown saltcake waste with an irregular surface of visible lumps and shelves that were created as the surface was dried out by saltwell pumping. Saltwell pumping yielded 45,434 gallons of net waste from 241-BY-105, while using 1,428 gallons of water for flushes and 53,985 gallons of water for dilution. The waste surface appears to be dry and shows no standing water within the tank. A large hole (~12.5 ft diameter) around the saltwell screen shows no evidence of supernatant liquid. The manual tape is located 8 feet from the tank center and reads 142.5 inches. On 11/25/02 the manual tape dropped from 163.75 to 145.0 inches. Since this date is after the completion of saltwell pumping, the drop is likely due to a localized collapse of the waste surface around the manual tape. Therefore the main waste surface level will be assumed to be the level reading taken on 11/24/02 of 163.75 inches. The highest waste surface at the tank wall was estimated from the video to be 260 inches. The waste surface then slopes steeply (~45°) from the tank sidewall to a distance about 8 feet from the wall. From there the waste surface is essentially flat until the large hole around the saltwell screen. Liquid observation well (LOW) readings indicate an ILL of 95.1 inches. Dip tube readings are obtained weekly by work package WS-02-0581. A 56" dip tube offset value was used due to an impenetrable waste layer encountered during saltwell screen installation. The layer is most likely a portion of the 63 tons of Portland cement that was added to the tank in the 1960s. The current dip tube level adjusted for the dip tube offset and assuming a zero inch capillary height, is 93.7 inches. Cement volume is not accounted for in this evaluation. All reported levels are based off the centerline of the tank's dished bottom. Calculations do not take into account any retained gas within the waste.

Evaluation Prepared by [signature] per telecon SJ 3/7/2003 SJ Date 3/7/03

Evaluation Checked by VC Boyles Date 3/7/03

Single-Shell Tank Interim Stabilization Evaluation Form (cont.)

EVALUATION CALCULATIONS AND COMMENTS:

TANK: **241-BY-105**

INPUT DATA & ASSUMPTIONS

Final Liquid Observation Well (LOW) Reading (3/04/03) = 95.148 inches ~ 95.1 inches

Final Manual Tape Reading (1/09/03) = 140.5 inches ~ 140.5 inches

Final Dip Tube Reading from WS-02-0581 (3/03/03) = 37.71 inches ~ 37.7 inches

Dip Tube Offset (Distance of lowest dip tube leg from tank bottom) = 56.0 inches

Final Adjusted Dip Tube Level = 37.71 inches + 56.0 inches = 93.71 inches ~ 93.7 inches

Divergence point = LOW & Manual Tape Levels vs. time diverge (supernatant liquid is exhausted)

Divergence point = (based on LOW Level from 7/23/01) = 166.068 inches ~ 166.1 inches

Net Waste Pumped since divergence (use week end 7/22/01 from \\AP012\DPU) = 39,920 gallons

Initial Liquid Level at Start of Pumping (Manual Tape - 7/12/01) = 170.75 inches ~ 170.8 inches

Capillary Height (based on dip tube basis) = 0 inches @

Sludge Volume = 48,000 gallons *

Height of Sludge Layer (48 Kgal) above bottom ~ 24.9 inches

Tank Dished Bottom Volume (Lower 12" Height) = 12,500 gallons *

Supernatant Volume (1/05/03 In-Tank Video Estimate) = 0 gallons

Assumed Sludge Porosity = 17% *

For 100-series (75' dia.) tanks (500, 750, and 1000K gallon SSTs), 1 inch equals 2750 gallons when above the dish bottom. *

CALCULATIONS

Drainable Porosity (Saltcake) = Net waste pumped (since 7/23/01)/[(Divergence point – final LOW level)*2750 gal/in]

D.I.L. = Drainable Interstitial Liquid *
= {[Final Adj. Dip Tube Level – Sludge Height – Capillary Height] * 2750 gal/in} * Drainable porosity (saltcake) + (Sludge Volume) * assumed sludge porosity

D.L.R. = Drainable Liquid Remaining *
= D.I.L. + supernatant volume

P.L.R. = Pumpable Liquid Remaining *
= D.L.R.– [((18" Unpump. Ht – 12")* 2750 gal/in) + (Dish Vol)* assumed sludge porosity]

*Reference HNF-2978, Rev. 4
@Reference RPP-5556, Rev. 0

Evaluation Prepared by [signature] SAS Date 3/7/06

Evaluation Checked by UC Boyle JFR Date 3/7/03

EVALUATION CALCULATIONS AND COMMENTS:

TANK: **241-BY-105**

CALCULATIONS (cont.)

POROSITY:

Drainable Porosity (Saltcake) = Net waste pumped (since 7/23/01)/[(Divergence point – final LOW level)*2750 gal/in]

= (39,920 gallons) / [(166.1" – 95.1") * 2750 gal/in] *100% = 20.4%

DIP TUBE BASIS:

DIL = [(93.7" – 24.9" – 0") * 2750 gal/in] * 0.204 + (48,000 gal * 0.17)

= [189,200 * 0.204 + 48,000 gal * 0.17] = 38,597 + 8,160 = 46,757 gallons (46.8 Kgal)

DLR = DIL + Supernatant = 46,757 gallons + 0 gallons = 46,757 gallons (46.8 Kgal)

PLR = DLR – [((18" – 12") * 2750 gal/in + 12,500 gal) * 0.17]

= 46,757 gal – [(16,500 gal + 12,500 gal) * 0.17] = 46,757 - 4930 = 41,827 gal (41.8 Kgal)

SOLIDS VOLUME:

The following description was obtained by review of the in-tank video taken 1/05/03. All estimates regarding waste dimensions were obtained by comparison with known dimensions of installed in-tank equipment and drawing H-2-1312, sht.1. The main waste surface of 241-BY-105 is 163.8 inches based on manual tape from 11/24/02. Current manual tape readings indicate the waste surface has collapsed to a level of 140.5 inches. The outer 8 ft of waste at the tank sidewall slopes up at a 45° angle to a level of approximately 260 inches. Centered on the saltwell screen is a cone-shaped depression with a diameter of approximately 12.5 ft. The top surface of this depression is at the main waste surface level of 163.75 inches and the waste surface level next to the saltwell screen is extrapolated to be 118.8 inches. The waste surface is uneven and rough, with many cracks and shelves due to pumping. Per HNF-2978, Rev. 4, the sludge volume of 241-BY-105 is 48 Kgal. For reporting purposes, the total quantity of solids in the tank will be calculated and the sludge volume will be subtracted from this total. This volume difference will then be the reported quantity of saltcake in 241-BY-105. For this calculation the saltcake and sludge solids volumes include the interstitial liquid but do not include the supernatant liquid.

The saltwell screen is not positioned in the center of the tank but for the purpose of this analysis it will assumed to be in the center. This approximation will have no impact on the volume calculated and will simplify the calculations for subtracting a cone shaped depression. Therefore, for the purpose of this evaluation, the solids volume will include an evaluation of the tank wall volume, upper surface (subtracting the cone shaped depression) volume, lower volume and the dish volume. See SOLIDS CALCULATION FIGURE (next page). These volumes are then added together to obtain the total volume as follows:

Evaluation Prepared by [signature] SLS Date 3/7/03

Evaluation Checked by V. C. Boyles JFR Date 3/7/03

EVALUATION CALCULATIONS AND COMMENTS:

TANK: **241-BY-105**

CALCULATIONS (cont.)

SOLIDS VOLUME (cont):

SOLIDS CALCULATION FIGURE

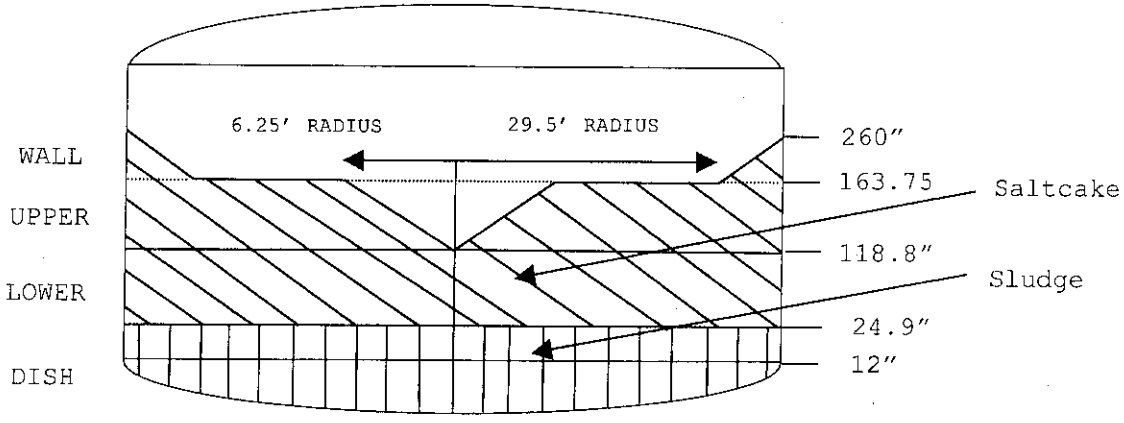

Volume (Wall) = [Vol. of (260 in - 163.75 in) * 2750 gal/in] – Vol. (cone frustum)

(Where frustum volume is = pi * H/3 (R_1^2 + R_2^2 + sqrt. (R_1^2 * R_2^2)) * 7.481 gal/ft^3)

Volume (Frustum) = pi * (8.0167'/3) * ((37.5'^2 + 29.5'^2 + sqrt. (37.5'^2 * 29.5'^2) * 7.481 gal/ ft^3

Volume (Wall) = Vol. of [264,688 gallons – 212,448 gallons]

Volume (Wall) = 52,240 gallons

Volume (Upper) = Vol. of [(163.8 in – 118.8 in) * 2750 gal/in] – [Vol. Of Cone Shaped Depression]

(Where cone volume is = pi * (1/3) * (Height (inches)/12) ft * (cone radius')^2 * 7.481 gal/ft^3)

Volume (Upper) = (45 in.* 2750 gal/in) – [pi * (1/3) * (45/12) ft * (6.25 ft.)^2 * 7.481gal/ft^3]

Volume (Upper) = 123,750 gal – 1,148 gal = 122,602 gallons

Volume (Lower) = Vol. Of [(118.8 in – 12 in) * 2750 gal/in = 293,700 gallons

(Volume (Dish) = 12,500 gallons

Volume (Tot) gallons = 52,240 + 122,602 + 293,700 + 12,500 = 481,042 gallons = 481.0 Kgal

Evaluation Prepared by _____ SLS Date 3/7/03

Evaluation Checked by VC Boyles JFR Date 3/7/03

EVALUATION CALCULATIONS AND COMMENTS:

TANK: **241-BY-105**

CALCULATIONS (CONT.)

SOLIDS VOLUME (cont):

Solids Volume Remaining = Volume (Tot) – Supernatant Liquid

= 481,042 gals – 0 gals = 481,042 gallons = 481.0 Kgal

Saltcake Volume remaining = Solids Volume Remaining – Sludge Volume

= 481,042 gals – 48,000 gals = 433,042 gallons = 433.0 Kgal

FLOW DATA:

The saltwell pump at 241-BY-105 was unable to run in AUTOMATIC mode near the completion of pumping, due to intermittent plugging of the saltwell system. A plugged Specific Gravity (SpG) transmitter causes erratic SpG readings and requires the system to run in a manual adjustment mode. With manual adjustments, an accurate pump discharge flow rate is unobtainable, as the level in the screen is not held constant. A varying level in the saltwell screen prevents accurate estimation of the waste in-flow rate.

However, per *Tank Farm Facility Interim Stabilization Evaluation* procedure, HNF-IP-0842, Volume IV, Section 4.1, paragraph 3.1.1.c, the in-flow rate to the saltwell screen can be used in lieu of pump-out rate. The in-flow rate is calculated by the change in dip tube readings versus time. The final saltwell screen in-flow rate is found by data obtained from the first hour after the completion of pumping. The first hour after shutdown is used, as the in-flow rate will be greatest (worst case) as the screen first begins to refill. Specifically, from 14:32 September 11th to 15:32 September 11th, 2002 the unadjusted dip tube level changed from 15.37 inches to 17.0 inches, as read from file 20020911BY105.CSV (read from \\AP003\saltwell\2002csv\9thmonth). The saltwell screen has a circular inner diameter of 10 inches with a calculated 0.34 gallons per inch of screen. The following equation shows the pumping rate for this final saltwell screen in-flow rate:

In-flow Rate = [(17.0 – 15.37 inches) * 0.34 gal/in / 60 minutes] = (0.009 gpm)

OPEN ITEMS:

None.

Evaluation Prepared by [signature] JS Date 3/7/03

Evaluation Checked by V. C. Boyles JFR Date 3/7/03

EVALUATION CALCULATIONS AND COMMENTS:

TANK: **241-BY-105**

REFERENCES:

TO-305-105, Rev. A-0 and C-6, *Perform 241-BY-105 Saltwell Pumping.*

H-2-1312, Sht. 1, Rev. 2, *75 ft. Tank Sections*

HNF-2978, Rev. 4, *Updated Pumpable Liquid Volume Estimates and Jet Pump Durations for Interim Stabilization of Remaining Single-Shell Tanks.*

RPP-5556, Rev. 0, *Updated Drainable Interstitial Liquid Volume Estimates for 119 Single-Shell Tanks Declared Stabilized.*

HNF-IP-0842, Volume IV, Section 3.6, *Engineering Calculations.*

HNF-IP-0842, Volume IV, Section 4.1, *Tank Farm Facility Interim Stabilization Evaluation*

HNF-SD-RE-TI-178, Rev. 7, *Single-Shell Tank Leak Stabilization Record.*

WS-02-0581, *241-G Weight Factor and Specific Gravity Readings*

20020911BY105.CSV, electronic PLC record file from server \\ap003\saltwell\2002csv\9thmonth.

Pumpchrts_PE.xls, Excel log of saltwell pumping history from server \\ap012\dpu\pumpchartsPE.

CONCLUSIONS/RECOMMENDATIONS:

241-BY-105 has met the applicable criteria for declaration of interim stabilization. See Page 1 for summary and final tank disposition and approvals.

ATTACHMENTS:

All record attachments, raw data, and calculations for this evaluation, as well as other information may be found in the tank history file maintained by Interim Stabilization Engineering, per the requirements HNF-IP-0842, Vol. 4 Section 4.1, paragraph 3.4.1.

Evaluation Prepared by [signature] SJS Date 3/7/03

Evaluation Checked by VC Boyle JFR Date 3/7/03

SINGLE-SHELL TANK INTERIM STABILIZATION EVALUATION FORM

TANK: 241-BY-106

Reason for Stopping Pumping:

- [x] Meets 0.05 gpm criteria, Date of Shutdown 12/31/03
- [ ] Major equipment failure, Date of Shutdown

Tank Waste Surface Level Condition and Comments: See Description on Page 2.

Evaluation: (See continuation page for calculations and additional comments)

Photo/video review completed - Date of most recent photo/video: 03/11/04

- [x] Tank history, temperature profile and intrusion reviews completed and no anomalies identified

Starting Liquid Level	202.9 inch	Method	LOW	Date	07/03/01
Final Liquid Level	74.0 inch	Method	LOW	Date	06/15/05
Total Net Pumped Volume		98.9 Kgal			
Capillary Height Used in Calculation		6.0 inches			
Final Solids Volume		428.7 Kgal			
Final Average Flow Rate		0.026 gpm			
Calculated Porosity		0.17 (sludge) & 0.24 (saltcake) assumed			
Supernatant Volume Remaining		0 Kgal			
Drainable Interstitial Liquid		37.3 Kgal			
Drainable Liquid Remaining		37.3 Kgal			
Pumpable Liquid Remaining		32.3 Kgal			

- [ ] Justification letter attached, Letter Number:

Disposition of Tank:

- [x] Tank Interim Stabilized
- [ ] Tank Not Interim Stabilized; Restart Pumping

Evaluation Prepared By: S. Swaney [signature] Date 6/27/2K5
Retrieval/Closure System Engineer

Evaluation Checked By: L.M. Sasaki L.M. Sasaki Date 6/27/05
Closure Projects Engineering Support Process Engineer (C-Farm Project Engineering)

APPROVED BY:

Manager, Retrieval/Closure System Engineering [signature] Date 6-27-05

Manager, Closure Projects Engineering Support MT SUTRY [signature] Date 6/27/05

EVALUATION CALCULATIONS AND COMMENTS:

TANK:

241-BY-106

OBJECTIVE/PURPOSE:

This Single-Shell Tank Interim Stabilization Evaluation provides the data and supporting calculations involved in declaring single-shell waste storage tank 241-BY-106 interim stabilized. The criteria to declare 100-series jet-pumped single-shell waste storage tanks to be interim stabilized are: 1) the tank contains less than 50,000 gallons of drainable interstitial liquid (DIL), 2) the tank contains less than 5,000 gallons of supernatant, and 3) the measured maximum pump-out or in-flow rate is less than 0.05 gallons per minute. In the event of major equipment failure, Criteria 3 may be waived with a letter of justification and management approval.

ANALYSIS METHOD:

The analysis method used for this evaluation relied upon the criteria and equations established in HNF-2978, Rev. 5, *Updated Pumpable Liquid Volume Estimates and Jet Pump Durations for Interim Stabilization of Remaining Single-Shell Tanks.* Calculations presented will utilize the LOW basis method. See the **Calculations** section for equation definitions.

This evaluation follows the applicable guidelines of the *Engineering Calculations* procedure, TFC-ENG-DESIGN-C-10, Rev. A-10, and the technical basis and formatting requirements of *Single-Shell Tank Interim Stabilization Evaluation* procedure, TFC-ENG-CHEM-P-15, Rev. B-1. When complete, this evaluation will be formally released as part of a direct revision to HNF-SD-RE-TI-178, *Single-Shell Tank Leak Stabilization Record.*

TANK WASTE DESCRIPTION:

Per Pumpchrts_PE.xls, the log of saltwell pumping history, and Interoffice Memo 7G330-LMS-04-001, saltwell pumping yielded 98,909 gallons of net waste from 241-BY-106, while using 3,994 gallons of water for pump flushes and 138,954 gallons for dilution.

The following description was obtained by in-tank video taken 03/11/04. The tank waste forms a very rough, yet predominantly flat, yellow, and fluffy saltcake surface. Above the waste there is a single exposed tank ring visible around the upper circumference of the tank. The waste surface appears to be dry and shows no standing water upon the waste surface. The main surface level is 167.8" as measured from the zip cord reading of 03/11/04.

Currently, liquid observation well (LOW) readings indicate an ILL of 74.0 inches (taken 06/15/05). Dip tube readings are obtained by work package WS-04-0568 and through the saltwell Operator Control System (OCS). The most recent (06/29/04) dip tube level adjusted for the dip tube offset of 6.0 inches and assuming a zero inch capillary height is 60.0 inches. The dip tube level is a direct reading and not affected by variations in porosity and capillary attractions, however, the LOW reading will be used for calculating the final volumes within 241-BY-106 since the most recent dip tube reading is nearly one year old. All reported levels are based on the centerline of the tank's dished bottom. Calculations do not take into account any retained gas within the waste.

Evaluation Preparer: _____ Date 6/27/2K5

Evaluation Checker: L.M. Sasaki L.M. Sasaki Date 6/27/05

EVALUATION CALCULATIONS AND COMMENTS:

TANK:

241-BY-106

INPUT DATA & ASSUMPTIONS

Initial Liquid Level at Start of Pumping (LOW taken 07/03/01) = 202.86 inches ~ 202.9 inches

Final Zip Cord Reading (03/11/04) = 167.75 inches ~ 167.8 inches

Final Liquid Observation Well (LOW) Reading (06/15/05) = 74.028 inches ~ 74.0 inches

Final Dip Tube Reading from WS-04-0568 & OCS (06/29/04) = 54.00 inches ~ 54.0 inches

Dip Tube Offset (Distance of lowest dip tube leg from tank bottom) = 6.0 inches

Final Adjusted Dip Tube Level = 54.0 inches + 6.0 inches = 60.0 inches ~ 60.0 inches

Capillary Height (based on LOW within saltcake bases) = 6.0 inches *

Sludge Volume = (120 KL) 31,700 gallons ***

Supernatant Volume = 0 gallons

Height of Sludge Layer (31.7 Kgal) above bottom ~ 19.6 inches **

Tank Dished Bottom Volume (Lower 12" Height) = 13,378 gallons **

Unpumpable Liquid Height Constant = 18 inches *

Assumed Salt Cake Porosity = 24% *

Assumed Sludge Porosity = 17% *

For 100-series (75' dia.) tanks (500, 750, and 1000K gallon SSTs), 1 inch equals 2750 gallons when above the dish bottom. *

EQUATIONS

D.I.L. = Drainable Interstitial Liquid *
= {[Final LOW Level – Sludge Height – Capillary Height] * 2750 gal/in} * assumed saltcake porosity + (Sludge Volume) * assumed sludge porosity

D.L.R. = Drainable Liquid Remaining *
= D.I.L. + supernatant volume

P.L.R. = Pumpable Liquid Remaining *
= D.L.R. – [((Unpumpable Ht – 12.0") * 2750 gal/in + Dish Vol.) *assumed sludge porosity]

*Reference HNF-2978, Rev. 5
**Reference RPP-13019, Rev. 0
***Twins Database query 06/22/05

Evaluation Preparer: [signature] Date 6/27/2K5

Evaluation Checker: L.M. Sasaki Date 6/27/05

EVALUATION CALCULATIONS AND COMMENTS:

TANK:

241-BY-106

RESULTS/CALCULATIONS

POROSITY:

The assumed values for saltcake (24%) and sludge (17%) will be used for final drainable volume calculations as a divergence point between the LOW and ENRAF readings was not possible as 241-BY-106 did not have an ENRAF installed and the installed Manual Tape failed shortly after pumping began. The divergence point typically seen in saltwell pumping is defined as the point at which the ENRAF reading stays nearly constant while the LOW (ILL) readings drop in proportion to the volume of liquid waste being removed from the tank during pumping. Data review shows that the LOW and Manual Tape (while operable) level instrument readings were approximately 2 feet different during pumping, making it impossible to determine the actual point of divergence.

LOW BASIS:

DIL = [(74.0" – 19.6" – 6.0") * 2750 gal/inch] * 0.24 + (31,700 gal * 0.17)

= [(133,100) *0.24] + (31,700 *0.17) = 31,944 +5,389 gal = 37,333 gal (37.3 Kgal)

DLR = DIL + Supernatant = 37,333 gallons + 0 gallons = 37,333 gallons (37.3 Kgal)

PLR = DLR – [((18.0" – 12.0") * 2750 gal/inch + 13,378 gal) * 0.17]

= DLR – [(16,500 gal + 13,378 gal) * 0.17]

= 37,333 gal - 5,079 gal = 32,254 gallons (32.3 Kgal)

SOLIDS VOLUME:
The following description was obtained by review of the in-tank video taken 03/11/04. All estimates regarding waste dimensions were obtained by comparison with known dimensions of installed in-tank equipment and drawing H-2-1312, Sht. 1, Rev. 2, *75 ft. Tank Sections.*

The tank waste forms a very rough, yet predominantly flat, yellow, and fluffy saltcake surface. The final zip cord reading determined this surface to be 167.8". This height will be used as the height of the solids across in the tank. A large depression forms around the two saltwell screens, approximately 5 feet offset from the tank center. The depression is assumed to be cylindrical with a 15 foot diameter and a depth of approximately 8 feet. A smaller depression exists directly adjacent to the main depression forming a shelf or ledge around one side. This depression is assumed to have an outer diameter of 20 feet, an inner diameter of 15 feet, a "shelf" depth of 5 feet, and the shape of a half circular ring. Depressions form around each piece of in tank equipment, however they are relatively small and considered negligible for the purposes of this calculation.

Evaluation Preparer: [signature] Date 6/27/2K5

Evaluation Checker: [signature] Date 6/27/05

EVALUATION CALCULATIONS AND COMMENTS:

TANK:

241-BY-106

RESULTS/CALCULATIONS (cont.)

SOLIDS VOLUME (CONT.):

Per the Best Basis Inventory (BBI) located in the TWINS database; the sludge volume of 241-BY-106 is 31.7 Kgal (19.6"). For reporting purposes, the total quantity of solids in the tank will be calculated and the sludge volume will be subtracted from this total. This volume difference will then be the reported quantity of saltcake in 241-BY-106. For this calculation the saltcake and sludge solids volumes include the interstitial liquid but do not include any supernatant liquid.

The newest saltwell screen is positioned approximately 5 feet from the center of the tank. For the purpose of this evaluation, the solids volume will include an evaluation of the tank upper surface volume (minus the two large depressions) and the dish volume. See SOLIDS CALCULATION FIGURE. These volumes are then added together to obtain the total volume as follows:

SOLIDS CALCULATION FIGURE (not to scale)

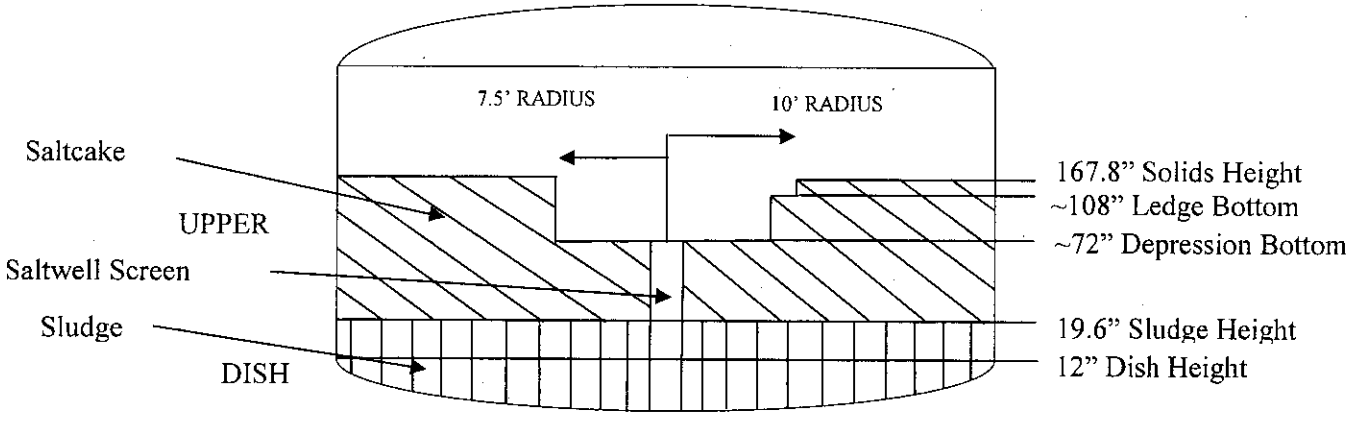

Volume = [Vol. (167.8"–12.0")*2750 gal/in + Dish Volume]–Vol. (rt. circ. cyl.) –Vol.(½ circ. ledge)

(Where the cyl. Vol. is = (pi *(R^2)*h*7.481 gal/ft^3 & Ledge Vol. = ½ (pi *h*($R^2 - r^2$)* 7.481 gal/ft^3) #

Volume (Upper) = [Vol. of (167.8"–12.0") * 2750 gal/in]) = 428,450 gallons

Volume (cylinder) = pi (R^2)* h* 7.481 gal/ft^3 =pi ($7.5'^2$)* (167.8"– 72")/12)* 7.481=10,554 gallons

Volume calcs ref Mark's Standard Handbook for Mech. Engs, 10th edition. Figures 2.1.33 "Annulus" and 2.1.40 "Right Circular Cylinder".

Evaluation Preparer: _____ Date 6/27/2/05

Evaluation Checker: L.M. Sasaki Date 6/27/05

EVALUATION CALCULATIONS AND COMMENTS:

TANK:

241-BY-106

RESULTS/CALCULATIONS (cont.)

Volume (Ledge) = ½(pi *h *($R^2 - r^2$)* 7.481 gal/ft^3 = ½ pi* 5' *($10'^2 - 7.5'^2$)* 7.481 = 2,571 gals

Volume (Upper) = 428,450 gallons – 10,554 gallons – 2,571 gallons = 415,325 gallons

Volume (Dish) = 13,378 gallons

Volume (Tot) gallons = 415,325 gallons + 13,378 gallons = 428,703 gallons = 428.7 Kgal

Volume Saltcake = Vol(Tot) –Vol (Sludge) = 428,703 gal -31,700 gal = 397,003 gal = 397.0 Kgal

FLOW DATA:

The final pump flow rate is found by data obtained from operating procedure TO-305-106, Rev. D-9 at 0300 December 31, 2003 to 1500 December 31, 2003 that show a total of 19 gallons of waste was pumped over the time period of 720 minutes (12 hours), while the pump ran in AUTOMATIC mode. This time span was the last stable operating shift of the saltwell pump. During the final months of pumping, 241-BY-106 achieved a net waste flow rate below 0.05 gpm on three separate occasions following system/screen flushes. Saltwell screen flushes are performed to verify flow data and ensure the screen openings are not plugged with waste sediment. The following equation shows the pumping rate for the final pump run:

Pump Rate = [19 gallons / 720 minutes] = (0.026 gpm)

SOFTWARE: None.

REFERENCES:

TO-305-106, Rev. D-9, *Perform 241-BY-106 Saltwell Pumping.*

Drawing H-2-1312, Sht. 1, Rev. 2, *75 ft. Tank Sections*

HNF-2978, Rev. 5, *Updated Pumpable Liquid Volume Estimates and Jet Pump Durations for Interim Stabilization of Remaining Single-Shell Tanks.*

RPP-13019, Rev. 0, *Determination of Hanford Tank Waste Volumes.*

HNF-SD-RE-TI-178, Rev. 8, *Single-Shell Tank Leak Stabilization Record.*

TFC-ENG-DESIGN-C-10, REV A-10, *Engineering Calculations.*

Evaluation Preparer: _____ Date 6/27/2K5

Evaluation Checker: L.M. Sasaki Date 6/27/05

EVALUATION CALCULATIONS AND COMMENTS:

TANK:

241-BY-106

REFERENCES (CONT.):

TFC-ENG-CHEM-P-15, Rev B-1, *Single Shell Tank Interim Stabilization Evaluation.*

WS-04-0568, *241-G Weight Factor and Specific Gravity Readings.*

Mark's Standard Handbook for Mechanical Engineers, 10th edition. Figures 2.1.33 and 2.1.40.

7G330-LMS-04-001, *October 2003 Saltwell Pumping Volume.*

Tank Waste Information System (TWINS) 2005, *queried June 22*, 2005, [Best Basis Inventory], Hanford intranet at http://twins.pnl.gov/twins.htm

Pumpchrts_PE.xls, Excel log of saltwell pumping history from server \\ap012\dpu\pumpchartsPE.

CONCLUSIONS/RECOMMENDATIONS:

241-BY-106 has met the applicable criteria for declaration of interim stabilization. See Page 1 for summary and final tank disposition and approvals.

ATTACHMENTS:

All record attachments, raw data, and calculations for this evaluation, as well as other information may be found in the tank history file maintained by Interim Stabilization Engineering, per the requirements TFC-ENG-CHEM-P-15, section 4.2.1.19.

Evaluation Preparer: _____ Date 6/27/2005

Evaluation Checker: L.M. Sasaki Date 6/27/05

INTERIM STABILIZATION EVALUATION

TANK NUMBER: 107-BY EFFECTIVE DATE: 7-31-79

LIQUID LEVEL
INTERSTITIAL ≅ 68"
Based on averaging of liquid level observation well data.

SOLIDS LEVEL & RISER NO. Riser # Not Avail.
125" CD-14
114.5 R-4

EST. SUPERNATE LIQUID VOLUME 0

EST. DRAINABLE INTERSTITIAL LIQUID VOLUME 24,000 gallon.

* Assumes drainability of sludge and salt cake to be 12.5% and 30%, respectively. (18,750 gal. contained in 150,000 gal. (62") of sludge and 4,950 in 6" of salt cake). Per the attached DSI, the interstitial liquid level is ≈68". The sludge level is estimated to be 62" leaving 6" of drainable liquid contained in the salt cake

TEMPERATURE: Maximum 80° F
Minimum 75° F

IS THIS TEMPERATURE A PROBLEM? yes ____ no X unknown

IS THERE A POTENTIAL DOME LOAD PROBLEM? yes ____ no X

These are small lollipops on the airlift circulators and a thermocouple. The total potential dome load represented by the visible lollipops is estimated to be 3000 pounds.

PHOTOGRAPH EVALUATION: (Order #87079, LL 10' 3", Date 6-21-79)

The surface is 100% dry solids. There appears to be a mound at the center of the tank. There is salt encrusted on the tank wall, and tar can be seen under the flashing and on the tank wall.

COMMENTS: This tank is being jet pumped by the second prototype jet pump. Production rates have dropped below the .05 gpm minimum pump-out criteria established in the Waste Concentration Program Plan, RHO-CD-330. The salt well screen has been flushed to clear any pluggage and the rate has again dropped below criteria. Therefore, this tank meets all criteria for interim stabilization. Prototype neutron and gamma probe data taken in this tank on 6-28-79 indicates a liquid level of 42 ±6". From this it is concluded that the above drainable liquid volume is a conservative estimate.

Prepared By: V. Dennis Mauser

Reviewed By: John H. Bailey 7-31-79

INTERIM STABILIZATION EVALUATION - JET PUMPED TANKS

Tank 108-BY

Reason Jet Pumping Halted:
Meets 0.05 gpm Criteria, date of shutdown _____
Major Failure of Jet Pump, date of shutdown 12/9/84

Additional Comments:
Plugged Jet

Evaluation: (see Continuation Sheet for calculations and additional comment)

Starting Liquid Level 99.5 inches Date 12/31/83
Supernatant Volume 700 gallons Date 12/31/83

Final Liquid Level measured after equilibration of Interstitial Liquid:

Dip Tubes 57.1 inches Date 2/4/85
LOW — Date —
Manual — Date —

Total Net Jet Pumped Production 27280 gallons

Calculated Solid Characteristics:

Porosity .125
Permeability/Viscosity (K/N) —
Capillary Height 24 inches (assumed worse case)

Estimated Drainable Liquid Remaining 8800 gallons
Final Average Flowrate .07 Date 12/8/84
Evaluation performed by J Stan Hill Date 2/4/85

Disposition of Tank

Tank Interim Stabilized at 8.8 thousand gallons of Drainable Liquid
0 thousand gallons of Pumpable Liquid

Tank not Interim Stabilized; Jet Pumping restarted _____

Approved by: Manager, TF&EPC [signature] Date 2-5-85
Manager, TFS&O [signature] Date 2-6-85
Program Manager [signature] Date 2-6-85

DISTRIBUTION: TF&EPC Tank File, HS&E Surveillance Analysis, Approval Signatures

Figure 2 (cont'd.)

Evaluation Calculations and Comment

Tank: 108-BY

$$L.L. = \frac{WF}{(WF-SpG)/10} = \frac{80}{(80-66)/10} = 57.1 \text{ inches}$$

Tank consists of 154,000 gallons of sludge

$$\text{inches of sludge} = \frac{(154{,}000-12500)}{2750} + 12 = 63.5 \text{ in}$$

All liquid is in sludge

Volume of sludge with liquid = $(57.1-12)(2750)+12500 = 136{,}500$ gallons

D.I. = $(136{,}500-66000).125 = 8800$ gallons

Calculations made by: J Stan Hill

Checked by: Terry L Vail

Attachment D

Single-Shell Tank Interim Stabilization Evaluation Form

TANK: 241-BY-109

Reason Jet-Pumping Halted:

[X] Meets 0.05 gpm criteria, Date of Shutdown 5/5/97
[X] Major equipment failure, Date of Shutdown 5/5/97

Surface Condition & Comments:

Based on the video taken on 6/18/97. The waste surface has a relatively uniform, slightly concave, crusty/cracked contour over most of the surface with no visible supernatant.

Evaluation: (See continuation page for calculations and additional comments)

	Photograph review completed -Date of most recent photograph 6/18/97
	Tank history review completed. [X]
	Tank temperature profile reviews completed. [X]
(Jet)	Starting Liquid Level 75.8 in Method Saltwell Dip Tubes Date 9/11/96
	Final liquid level 52.4 in Method Saltwell Dip Tubes Date 6/2/97
(All exc. Aux)	Total Net Pumped Volume 157.1 Kgal
(Jet)	Capillary Height Used in Calculation 12 in
	Final Solids Volume 290.3 Kgal
(Jet)	Final Average Flowrate <.05 to .15 gpm (see section b details)
(Jet)	Calculated Porosity .33
	Supernatant 0 Kgal
(All exc. Aux)	Drainable Interstitial Liquid 36.7 Kgal
(All exc. Aux)	Drainable Liquid Remaining 36.7 Kgal
(All exc. Aux)	Pumpable Liquid Remaining 20.3 Kgal
(Jet & Aux)	[ ] Justification letter attached

Disposition of Tank:

[X] Tank Interim Stabilized
[ ] Tank Not Interim Stabilized; Restart Pumping

Evaluation Performed by: (L.F. Dougherty) L.F. Dougherty Date 6/19/97

Checked by: (M.R. Koch) Michael R. Koch Date 6/19/97

APPROVED BY:

Team Lead, Stabilization Engineer (M.R. Koch) Michael R. Koch Date 6/19/97

Manager, Tank Farm Engineering (G.L. Dunford) G.L. Dunford Date 6/20/97

Manager, West Tank Farms ~~Transition Project~~ Operations (J.G. Burton) Judith Burton Date 7/8/97

Distribution: TWRS Nuclear Safety, Surveillance Engineering, Systems Engineering, Single Shell Tank History File, TPA Integration Control, Approving Managers, Evaluation Performer, Team Lead, and Checker signatures.

Attachment D (cont.)

EVALUATION CALCULATIONS AND COMMENTS:
(ref. WHC-IP-0842, Vol. IV, Section 4.1 for stabilization evaluation steps)

a. Pumping Background and Post Pumping Observations:

A water flush of the saltwell screen was conducted on 4/19/97 after pump flow rates dropped to ~.04 gpm (over ~6 hours). After the flush, an additional 2100 gallons were pumped until 4/29/97 when pump flow rates again dropped below .05 gpm (~.02 gpm). After another flush of the saltwell screen an additional 1200 gallons were pumped until 5/5/97 when the jumper valve failed. A pit video verified that the jumper valve failed and resulted in a spray leak. Pumping was not resumed due to additional exposure necessary to operate the pump or repair the valve, additional flushing necessary to maintain flowrate, and data had already indicated that the pumping criteria had been met. A dip tube liquid level reading of 44.2 in. was taken on 5/8/97. The tank waste was allowed to stabilize and another dip tube reading of 52.4 in. was taken on 6/2/97.

b. Review of Jet Pump production data:

Pump Rates: Since the time saltwell pumping operations resumed on April 2, 1997, pumping rates have varied from a high of ~.5 gpm immediately after flushing the saltwell with 300 gallons of water to a low of ~.02 gpm preceding saltwell flushing the second time. Twelve shifts after the second flush, when the valve failure occurred, the pumping rate was ~.15 gpm (over the last 6 hours of operation). Based on the volume pumped and flow rates preceding the previous flushes the flow rate would have quickly dropped below .05 gpm and another flush would have been required. In addition the amount pumped after each flush was decreasing.

Liquid Inflow: During jetpumping, a liquid level of 6.15 inches in the saltwell screen was maintained using automatic control. Maintaining this fixed liquid level necessitates that the screen inflow rate and export rate are exactly equal. See "Pump Rates" above for liquid inflow rates during pumping.

Liquid inflow after pump shutdown can be estimated by using dip tube readings in the saltwell after shutdown.

Inflow rate $V = \pi r^2 h$

- Where r is the radius of the saltwell screen = 5 in
- h is the difference in dip tube readings just after and approximately one month after shutdown (see section d).

Therefore $V = \pi(5\text{ in})^2(52.42\text{ in} - 44.2\text{ in}) \times 1\text{ gal}/231\text{ in}^3 = 2.79 = 2.8$ gal. The change in height represented by this calculation occurred over approximately 1 month. Assuming all inflow occurred over 1 hour (considered conservative) yields an inflow rate of 2.8 gal/60 min = .0470 gpm.

c. Review of in tank photos/videos:

Based on video taken on 6/18/97 (ref. work package 2W-97-719). The waste surface has a relatively uniform, slightly concave, crusty/cracked contour over most of the surface with no visible supernatant.

d. Interstitial Liquid level reading:

241-BY-109 has an LOW installed and neutron Interstitial Liquid Level is monitored but the readings indicate that there is no discernable interstitial liquid level (i.e., the LOW readings correlate closely with the FIC surface level readings). Saltwell dip tube readings were used to estimate Interstitial Liquid Level readings.

- Previous Starting Interstitial Liquid Level
  (Dip tube readings on 9/11/96; (Weight Factor % = 20%, S.G.= 1.32)
  = 20%(500 in) = 100 in. unadjusted
  = 100 in. / 1.32
  = 75.8 in. Adjusted Liquid Level

- Starting Interstitial Liquid Level
  (Dip Tube readings on 11/7/96; (Weight Factor % = 15%, S.G.= 1.32)
  = 15%(500 in) = 75 in. unadjusted
  = 75 in. / 1.32
  = 56.8 in. Adjusted Liquid Level

- Ending Interstitial Liquid Level
  (Dip Tube readings on 5/8/97; (Weight Factor % = 11.5%, S.G.= 1.30)
  = 11.5%(500 in) = 57.5 in. unadjusted
  = 57.5 in. / 1.30
  = 44.2 in. Adjusted Liquid Level

- Current Interstitial Liquid Level
  (Dip Tube readings on 6/2/97; (Weight Factor % = 13%, S.G.= 1.24)
  = 13%(500 in) = 65 in. unadjusted
  = 65 in. / 1.24
  = 52.4 in. Adjusted Liquid Level

Note that the "Current" recorded S.G. reading of 1.24 is considered to be slightly lower than typically observed (e.g. 1.3). This may be partially attributable to dilution of the liquid in the saltwell screen due to the water flush performed just after shutdown. A value of 1.24 was used because no means exists to definitively qualify waste dilution percentage, and it provides a conservative estimate for determining the tank stabilization status.

e. Solid Waste Level Estimate:

Manual FIC readings, as well as LOW readings, indicate that the waste surface level has dropped from ~180 inches in 2/91 to ~113 inches in 4/97. Final solids volume is therefore calculated to be:

Final Solids Volume = (Surface Level - Tank Bottom Dish Height) * (Volume per inch of Tank) + Dish Volume
= (113 in. - 12 in.) * (2750 gal/in.) + 12,500 gal
= 290,250 gal = 290.3 Kgal

f. Tank Waste Calculations:

Drainable Liquid Remaining = (Current Interstitial Liquid Level - Capillary Height) * (2750 gal/in) * (Porosity) + Current Supernatant.

where
- Porosity = (Net Jet Pump Production - Starting Supernatant) / [(Starting Interstitial Liquid Level - Supernatant/2750 gal/in.- Current Interstitial Liquid Level)* 2750 gal/in.]
  - Net Jet Pump Production (from 11/7/96 to 5/8/97) = ~4 Kgal
  - Starting Supernatant = 0 Kgal
  - Starting Interstitial Liquid Level = 56.8 in.
  - Current Interstitial Liquid Level = 52.42 in
- Porosity = (4000 gal - 0)/[(56.8 in - 52.42 in)* 2750 gal/in] = .33
- Capillary Height = 12 in.
- Current Supernatant = 0

Therefore:

Drainable Liquid Remaining = (52.42 in - 12 in) * (2750 gal/in) * .33 + 0
= 36,681 gal = 36.7 Kgal

Drainable Interstitial Liquid = Drainable Liquid Remaining - Current Supernate
= 36,681 gal - 0 gal = 36.7 Kgal

Pumpable Liquid Remaining = Drainable Liquid Remaining - [18*(2750)*(Porosity)]
= 36,681 gal - [18 in *(2750 gal/in)*(.33)]
= 20,346 gal = 20.3 Kgal

g. Tank History and Temperature Review:

BY-109 contains noncomplexant waste, is considered sound (not leaking), is not on a Watch List, and is a Low Heat Tank (i.e., < 40,000 BTU/hr). No temperature readings have been obtained in BY-109 for several years (HNF-EP-0182-105, 12/96).

h: Intrusion Status Summary:

There is no indication of intrusion into tank 241-BY-109.

i. Stabilization Evaluation Signatures:

See page 1 for Signatures.

j. Major Equipment Failure:

Not Applicable. Although the jumper valve failed, the pumping criteria had been met.

Evaluation Performed by _____ Date 6/19/97

Checked by _____ Date 6/19/97

INTERIM STABILIZATION EVALUATION - JET PUMPED TANKS

Tank 110-BY

Reason Jet Pumping Halted:
Meets 0.05 gpm Criteria, date of shutdown 12/23/84
Major Failure of Jet Pump, date of shutdown _____

Additional Comments:

Evaluation: (see Continuation Sheet for calculations and additional comment)

Starting Liquid Level 190.8 Date 5/20/84
Supernatant Volume 101,000 gallons Date 5/20/84

Final Liquid Level measured after equilibration of Interstitial Liquid:

Dip Tubes 60" Date 1/23/85
LOW N/A Date —
Manual N/A Date —

Total Net Jet Pumped Production 213,300 gallons

Calculated Solid Characteristics:

Porosity .13
Permeability/Viscosity (K/N) —
Capillary Height 12" saltcake 24" sludge (assumed)

Estimated Drainable Liquid Remaining 8500
Final Average Flowrate .02 Date 12/23/84
Evaluation performed by J. Ham Hill Date 1/24/85

Disposition of Tank

Tank Interim Stabilized at 8.5 thousand gallons of Drainable Liquid
0 thousand gallons of Pumpable Liquid

Tank not Interim Stabilized; Jet Pumping restarted _____

Approved by: Manager, TF&EPC [signature] Date 1/25/85
Manager, TFS&O [signature] Date 1-25-85
Program Manager [signature] Date 1-25-85

DISTRIBUTION: TF&EPC Tank File, HS&E Surveillance Analysis, Approval Signatures

Figure 2 (cont'd.)

Evaluation Calculations and Comment

Tank: 110-BY

Amout of Liquid Pumped Since Last Manometer Readings = 3220 gallons
Liquid Level Decrease in manometer readings = (69" - 60") = 9"

$$\text{Porosity} = \phi = \frac{3220}{9(2750)} = .13$$

44.9 - inches of sludge (103,000 gallons)

inches of saltcake = (60 - 44.9) = 15.1 inches

Volume of saltcake = (15.1)(2750) = 41,500 gallons

Drainable Interstitial in Sludge = (103,000 - 66,000)(.13) = 4810 gallons

Drainable Interstitial in Saltcake = (41,500 - 33000)(.13) = 1105 gallons

Total Drainable Interstitial = 4810 + 1105 = 5915 gallons

Pumpable Liquid Remaining = $\underbrace{(4810 - 6500)}_{\text{sludge}}^{0} + \underbrace{(1105 - 22500)}_{\text{saltcake}}^{0} = 0$

Calculations made by: J. Stan Hill

Checked by: T. S. Vail

INTERIM STABILIZATION EVALUATION - JET PUMPED TANKS

Tank 111-BY

Reason Jet Pumping Halted:
Meets 0.05 gpm Criteria, date of shutdown 11/16/84
Major Failure of Jet Pump, date of shutdown —

Additional Comments:

Evaluation: (see Continuation Sheet for calculations and additional comment)

Starting Liquid Level 20.02' Date 8/31/83
Supernatant Volume Not Available Date —

Final Liquid Level measured after equilibration of Interstitial Liquid:

Dip Tubes 27.4" Date 1/23/85
LOW — Date —
Manual — Date —

Total Net Jet Pumped Production 313,200 gallons

Calculated Solid Characteristics:

Porosity .46 (assumed for saltcake)
Permeability/Viscosity (K/N) —
Capillary Height 12-inches saltcake + 24-inches sludge

Estimated Drainable Liquid Remaining 0
Final Average Flowrate .01 Date 11/16/84
Evaluation performed by J Alan Hill Date 1/24/85

Disposition of Tank

Tank Interim Stabilized at 0 thousand gallons of Drainable Liquid
0 thousand gallons of Pumpable Liquid

Tank not Interim Stabilized; Jet Pumping restarted _____

Approved by: Manager, TF&EPC [signature] Date 1/25/85
Manager, TFS&O [signature] Date 1-25-85
Program Manager [signature] Date 1-25-85

DISTRIBUTION: TF&EPC Tank File, HS&E Surveillance Analysis, Approval Signatures

Figure 2 (cont'd.)

Evaluation Calculations and Comment

Tank: 111-BY

By manometers, liquid level = 27.4"

per SR-14 15.1" sludge (21,000 gallons)

∴ 27.4 - 15.1 = 12.3 inches of saltcake

Capillary height of saltcake = 12 inches

Capillary height of sludge = 24 inches

∴ Drainable interstitial in sludge and saltcake = 0 gallons

since the amount of liquid in each substance is less than the capillary height.

Calculations made by: J. Stan Hill

Checked by: T. S. Vail

INTERIM STABILIZATION EVALUATION - JET PUMPED TANKS

Tank: 112-BY

Reason Jet Pumping Halted:

[X] Meets 0.05 gpm Criteria, Date of Shutdown 5-7-84

[ ] Major Failure of Jet Pump, Date of Shutdown _____

Additional Comment:

Shut down with flowmeter problem

Evaluation: (See Continuation Sheet for calculations and additional comment)

Starting Liquid Level 118.0 " Date 4-28-82

Supernatant Volume 3000 gallons Date 4-28-82

Final Liquid Level Measured After Equilibration of Interstitial Liquid:

Dip Tubes 18.7 " (maximum) Date 5-29-84

LOW _____ Date _____

Manual _____ Date _____

Total Net Jet Pump Production 116,402 gallons

Calculated Solid Characteristics:

Porosity 0.42

Permeability/Viscosity (K/N) —

Capillary Height 12" (assumed)

Estimated Drainable Liquid Remaining 7700 gallons

Final Average Flowrate 0.038 gpm DateMay4-6, 1984

Evaluation Performed by Nancy E Bell Date 6-11-84

Evaluation Checked by [signature] Date 6-12-84

Disposition of Tank:

[X] Tank Interim Stabilized at 7.7 thousand gallons of Drainable Liquid

0 thousand gallons of Pumpable Liquid

[ ] Tank Not Interim Stabilized; Jet Pumping Restarted

Approval By: Manager, TF&EPC RAJ [signature] Date 6/12/84

Manager, TFS&O [signature] Date 6-13-84

Program Manager [signature] Date 6-13-84

DISTRIBUTION: TF&EPC Tank File, HS&E Surveillance Analysis, Approval Signatures

INTERIM STABILIZATION EVALUATION - JET PUMPED TANKS

(CONTINUATION PAGE)

Evaluation Calculations and Comments

TANK: 112-BY

Current Liquid Level	Date	Weight Factor	Specific Gravity	Liquid Level
	5-14-84	17.1	1.26	17.6
	5-23-84	14.8	1.37	14.8
	5-29-84	14.7	1.00	18.7
			(if 1.3 is used,	15.3)

$$\text{Liquid Level} = \frac{\text{Weight Factor}}{\text{Specific Gravity}} + 4 = 18.7'' \text{ (maximum)}$$

Starting Liquid Level = 118.0"

Starting Supernatant = 3000 gal

Starting Solids Level = $118.0 - \frac{3000 \text{ gal}}{2750 \text{ gal/in}}$ (Starting Interstitial Liquid Level) = 116.9"

Total Net Production = 116,402 gal.

$$\text{Porosity} = \frac{\text{Total Net Production} - \text{Supernatant}}{(\text{Starting Solid Level} - \text{Current Liquid Level}) \times 2750 \text{ gal/in.}}$$

$$= \frac{116{,}402 - 3{,}000}{(116.9 - 18.7) \times 2750} = 0.42$$

Drainable Interstitial Liquid (DIL) = (Current Liquid Level − Capillary Height) × 2750 gal/in × Porosity

For salt cake, assume 12" capillary height.

DIL = (18.7 − 12) × 2750 × 0.42 = 7739 gal.

Pumpable Interstitial Liquid = 0 by definition

Final Supernatant = 0

Total Drainable Liquid = 7739 gal.

Total Pumpable Liquid = 0

Final Flowrate (Average) = 0.038 gpm

Calculated by Nancy E Bell Date 6-11-84

Checked by [signature] Date 6-12-87

INTERIM STABILIZATION EVALUATION - NON-JET PUMPED TANKS

Tank: 101 C

Evaluation (see Continuation Page for calculations and additional comments):

[X] Photograph review completed - Date of most recent photographs 9/25/74

[X] Tank history review completed

[X] Tank temperature profile review completed

Surface Description: 1974 Photos show sludge surface with shallow pools of liquid. More recent photos have been too hazy even though a portable exhauster was used. Date 1974

Solids Level 27 1/2" Date 10/31/83 Method manual tape

Liquid Level 27 1/2 " Date 10/31/83 Method manual tape

Solids Volume 88,000 gallons.

Estimated Drainable Liquid Volume 2800 gal

Average Maximum Tank Temperature, past 6 months 97°F

Estimated Supernatant Volume 0 gallon

[ ] Cost/Benefit Analysis attached

Evaluation Performed by N Bell Date 11/15/83 Checked by TDK Date 11/16/83

Disposition of Tank:

[X] Tank Interim Stabilized at 2800 gallons of drainable liquid

[ ] Tank not Interim Stabilized; stabilization activities resumed

Approved by: Manager, TF&EPC R. A. Van Meter Date 11/16/83

Manager, TFS&O G. T. Dubelow Date 11-28-83

Program Manager R. A. Zinsli Date 11-29-83

DISTRIBUTION: TF&EPC Tank File, Tank Farm Surveillance Analysis, Approval Signatures

INTERIM STABILIZATION EVALUATION - NON-JET PUMPED TANKS

(CONTINUATION PAGE)

Evaluation Calculations and Comments

Calculations made by N E Bell

TANK: 101 C

Checked by [illegible]

Liquid level = 27.5"

Photos indicate the solids level is equal to liquid level. The only central riser has a saltwell screen installed and is weathercovered so current solids level measurements are not possible.

Supernatant Liquid = 0 gal.

Solids Volume = 27.5 in. x 2750 gal./in. + 12,500 gal
= 88,000 gal.

Drainable Interstitial Liquid = (Solids - Capillary Height x 2750 gal./in.) x Porosity = DIL

For sludge, capillary height is estimated to be 24" and porosity is 0.125.
DIL = (88,000 - 24 x 2750) x 0.125 = 2750 gal.

For the worst case (assuming sludge acts like saltcake which has a capillary height of 12" and a porosity of 0.45),
DIL = (88,000 - 12 x 2750) x 0.45 = 24,750 gal.
This valve is below the criterion for jet pumping.

Drainable Liquid Volume = DIL + Supernate = 2750 gal.

Single Shell Tank Interim Stabilization Evaluation Form

TANK: 241-C-102

Page 1 of 6

Reason Jet Pumping Halted:

[ ] Meets 0.05 gpm criteria, Date of Shutdown ____
[X] Major equipment failure, Date of Shutdown 07/15/95

Surface Condition & Comments: WASTE APPEARS LIGHT BROWN IN COLOR, WITH NO VISIBLE LIQUID IN THE TANK. WASTE IS SLOPED AWAY FROM THE TANK WALLS AND HAS LARGE CRACKS. THE SALTWELL SCREEN IS COMPLETELY DRY AT THE SURFACE. THE FIC IS LOCATED IN A LARGE MOUND OF WASTE, APPROXIMATELY THREE FEET ABOVE THE SURFACE.

Evaluation: (See continuation page for calculations and additional comments)

Photograph review completed - Date of most recent photograph 08/24/95
Tank history review completed. [X]
Tank temperature profile reviews completed. [X]
(Jet) Starting Liquid Level 149.4 IN Method FIC Date 11/18/91
Final liquid level 82.3 IN Method DIP TUBES Date 08/15/95

(All exc. Aux) Total Net Pumped Volume 46.7 KGAL
(Jet) Capillary Height Used in Calculation 24 IN
Final Solids Volume 315.8 KGAL
(Jet) Final Average Flowrate 0.33 GPM.
(Jet) Calculated Porosity 26 %
Supernatant Ø KGAL
(All exc. Aux) Drainable Interstitial Liquid 30.2 KGAL
(All exc. Aux) Drainable Liquid Remaining 30.2 KGAL
(All exc. Aux) Pumpable Liquid Remaining 17.3 KGAL
(Jet & Aux) [X] Justification letter attached

Disposition of Tank:

[X] Tank Interim Stabilized
[ ] Tank Not Interim Stabilized; Restart Pumping

Evaluation Performed by: D. A. Bragg Date 09/18/95

Checked by: V. C. Boyles Date 9/18/95

APPROVED BY:

Team Lead, Stabilization Engineer V C Boyles Date 9/18/95
Manager, Interim Stabilization Engineering [signature] Date 9/18/95
Manager, East or West Tank Farm Transition Project [signature] Date 9/21/95

Distribution: TWRS Nuclear Safety, Surveillance Engineering, Systems Engineering, Single Shell Tank History File, TPA Integration Control, Approving Managers, Evaluation Performer, Team Lead and Checker signatures.

Figure 2. Interim Stabilization Evaluation for Jet-Pumped Tanks (Sheet 2 of 6)

EVALUATION CALCULATIONS AND COMMENTS: TANK 241-C-102

PUMPING DATA: Campaign I (11/19/91 - 01/21/92)

Net volume pumped from 11/91 to 01/92 = 10,485 gal

Starting Surface Level 11/18/91 (FIC) = LL_{start} = 149.4 in
Ending Surface Level (FIC) 01/27/92 = LL_{end} = 149.0 in
Decrease in Surface Level = LL_{delta} = (LL_{start} - LL_{end}) = 0.4 in

Note that the above surface levels were based on FIC readings taken in Campaign I, before and after pumping. These readings do not provide adequate data for determination of the interstitial liquid levels (ILL) corresponding with the volume of liquid pumped. Without sufficient data, the ILL, waste porosity, and the estimated liquid remaining in the tank can not be estimated.

The final interstitial liquid level, waste porosity, and the estimated liquid remaining in the tank will be determined based on data collected during the second pumping campaign.

PUMPING DATA/CALCULATIONS Campaign II (09/28/94 - 07/15/95)

Net volume pumped from 09/94 to 07/95 = P_{net} = 36,243 gal
Estimated supernatant pumped = S_{total} = 0 gal

Waste Surface level beginning of pumping 07/01/94 (FIC) = 149.0 in
Waste Surface level after pumping 08/14/95 (FIC)* = 146.3 in
Decrease in Waste Surface Level = 2.7 in

Final Solids Volume Estimate, based on FIC reading* and video depicting irregular surface = (146.3 - 36) in * (2,750) gal/in + 12,500 gal
= 315,825 gal

* Note that the FIC is located on top of a mound of waste approximately 3 feet above the waste surface. Consequently, for estimating the final solids volume, 36 inches were subtracted from the FIC reading.

Evaluation performed by: D. A. Bragg Date 09/18/95
Checked by: V.C. Boyles Date 9/18/95

Figure 2. Interim Stabilization Evaluation for Jet-Pumped Tanks (Sheet 3 of 6)

EVALUATION CALCULATIONS AND COMMENTS: TANK 241-C-102

PUMPING DATA/CALCULATIONS Campaign II (09/28/94 - 07/15/95) (continued)

Interstitial liquid level 08/29/94 (Diptubes)

Weight $Factor_{ave\ start}$ = 101.3 in Specific $Gravity_{start}$ = 1.14
WF/SpG = 101.3/1.14 = 88.9 in
Adjusted liquid level = LL = (88.9 + 16.0**) in = 104.9 in

Interstitial liquid level 08/15/95 (Diptubes)

Weight $Factor_{end}$ = 75.6 in Specific $Gravity_{end}$ = 1.14
WF/SpG = 75.6/1.14 = 66.3 in
Adjusted ending liquid level = LL_{end} = (66.3 + 16.0**) in = 82.3 in

Decrease in Interstitial Liquid Level = LL_{delta} = (LL_{start} - LL_{end}) = 22.6 in

WASTE POROSITY

Tank 241-C-102 was plagued throughout both pumping campaigns with problems of plugged diptubes (required for interstitial liquid levels) and plugged foot valves. These problems were not easy to overcome given the nature of the waste inside the tank and the fact that 241-C-102 is located within a controlled zone requiring personnel to wear supplied air equipment, making routine maintenance more difficult. This situation made it hard to obtain adequate and reliable data to determine waste porosity.

Due to the lack of liquid level data during the first pumping campaign, the liquid level data and volumes pumped during the second campaign will be used for determining the waste porosity.

The 241-C-102 pump operated only 6 days between September 28, 1994, and May 12, 1995, because of equipment problems associated with waste pluggage. Because of the additional flush water added and the extended down time, it is believed that porosity calculations for this period are highly unreliable. Consequently, no porosity calculations will be performed for this time period. Tank 241-C-102 resumed pumping on May 13, 1995, and operated nearly continuously until equipment failure on July 15, 1995. The most credible liquid level data was obtained between May 01, 1995, and June 20, 1995.

Porosity = (Net volume pumped - supernatant pumped) gal/{[Total decrease in liquid level - decrease in liquid level due to supernatant pumped in] * 2,750 (gal/in)}

** The diptubes are 16 inches higher than the manual tape "zero" reading so 16 inches were added to the liquid level reading.

Evaluation performed by: D.A. Bragg Date 09/18/95
Checked by: VC Boyles Date 9/18/95

Figure 2. Interim Stabilization Evaluation for Jet-Pumped Tanks (Sheet 4 of 6)

EVALUATION CALCULATIONS AND COMMENTS: TANK 241-C-102

WASTE POROSITY (continued)

During the second pumping campaign, between 05/01/95 and 06/20/95, 17,668 gallons were pumped from C-102. The interstitial liquid level decreased by 24.9 inches during this period.

P_{net} = 17,668 gallons, estimated supernatant pumped = S_{total} = 0 gallons
Porosity = 17,668 gallons/[(24.9 in) * (2,750 gal/in)] = 26%

DIL, DLR, PLR CALCULATIONS

In Tank 241-C-102, the saltwell screen was reduced in length by 24 inches because of installation problems, bringing the diptubes 16 inches above the tank datum. The pumpable liquid remaining volume takes into account the shortened saltwell screen.

ASSUMPTIONS: The waste above the final Interstitial Liquid Level does not contain pumpable liquid.

Adjusted ending liquid level = LL_{end} = (66.3 + 16.0**) in = 82.3 in

Total waste volume (below interstitial liquid level I.L.L.) = [(82.3 in)*(2,750 gal/in) + 12,500 gal (dish bottom tank)] = 238,825 gal

Drainable Interstitial Liquid (DIL) = (Total Waste below I.L.L. - unpumpable column due to shorter screen - capillary height for sludge tank) * porosity = {Waste Volume below ILL - 12,500 gal - (16 in)*(2,750 gal)- [(24 in)*(2,750 gal/in)]}*(0.26)

DIL = {(238,825 gal) - 12,500 gal - [(40 in)*(2,750 gal/in)]}*(0.26) = 30,244 gal

Drainable Liquid Remaining (DLR) = DIL + Remaining Supernatant
Supernatant = 0 kgal; DLR = DIL = 30,244 gal

Pumpable Liquid Remaining (PLR) = DLR - [(unpumpable height) * porosity]
= 30,244 - [(18 in)*(2,750 gal/in)*(0.26)] = 17,374 gal = 17.3 kgal

The volume of pumpable liquid remaining in 241-C-102 is estimated as 17.3 kgal.

** The diptubes are 16 inches higher than the manual tape "zero" reading so 16 inches were added to the liquid level reading.

Evaluation performed by: D A Brazy Date 09/18/95
Checked by: VC Boyles Date 9/18/95

Figure 2. Interim Stabilization Evaluation for Jet-Pumped Tanks (Sheet 5 of 6)

Letter of Justification for Declaring 241-C-102 Stabilized

Saltwell pumping of Tank 241-C-102 resumed on September 28, 1994, after a two year hiatus. This hiatus was the result of a noxious vapor incident in the BX/BY and C Farms and subsequent administrative reviews of conduct of operations in the tank farms. A total of 46,700 gallons of liquid waste was removed from the tank prior to a major equipment failure which halted pumping on July 15, 1995. This volume pumped includes both the 1991-1992, and the 1994-1995 campaigns. There is approximately 17,300 gallons of pumpable liquid remaining in the tank.

Repairs required to resume pumping at 241-C-102 would include replacement of the jetpump lower leg assembly, and the pressure switch. However, it is not economically practical to replace the failed equipment and remove the remaining liquid. It is estimated that it would cost $70,000 to replace the equipment and meet waste disposal costs at 241-C-102. This task was already performed once at 241-C-102, in May, 1995. The new foot valve replacement remained functional for approximately 8 weeks before failing, despite higher pump flow rates (0.75 - 1.4 gpm) and regular flushes with hot water.

The average infiltration flow rate of liquid into the saltwell screen at 241-C-102 decreased to 0.33 gpm or 237 gpd, during the final week of pumping. At 100% pump efficiency and a constant flow rate of 0.33 gpm, it would take over 11 weeks to remove the remaining pumpable liquid from the tank. However, infiltration rates and consequently flow rates, decrease with time as the interstitial liquid level drops. The actual estimated time to remove the remaining pumpable liquid from 241-C-102, based on expected saltwell infiltration rates, is 22 weeks, not accounting for any major equipment problems or operational delays. There is a very high probability of foot valve failure before pumping can be completed at 241-C-102 based on past experience in this tank.

At low pump flow rates (less than 0.4 gpm), 300 - 400 gallons of flush water will be added to the waste stream to maintain the 241-C-102 transfer system operable during each week that pumping would be ongoing. In the last week the 241-C-102 pump operated in the second campaign, a total of 450 gallons of flush water was required to maintain the transfer system operable. During that time, a total of 1,400 gallons of tank waste was pumped. If pumping were restarted, this would result in adding between 6,600 and 8,800 gallons of flush water to the waste stream to remove the remaining pumpable liquid (17,300 gallons) from 241-C-102. Given the probability of pluggage in the foot valve, the required flush water volume may exceed the above estimate by double, or a third foot valve failure may occur. The required water addition to the waste stream is not compliant with ALARA principles.

In addition, if the foot valve does fail, the jetpump lower leg assembly would have be replaced, which requires the pump and pump plate to be lifted approximately 40 feet into the air. Tank 241-C-102 is located inside a zone requiring personnel to wear fresh-air supplied equipment, which results in increased hazards and exposure time to facilitate repairs. Workers received approximately 200 mrem exposure during the May, 1995 replacement of the jetpump lower leg assembly.

Figure 2. Interim Stabilization Evaluation for Jet-Pumped Tanks (Sheet 6 of 6)

Letter of Justification for Declaring 241-C-102 Stabilized (continued)

Another concern in resuming pumping operations at 241-C-102 is the high probability for pluggage in the main-header transfer line SN-275. The transfer line is unique in that it runs uphill from the C Farm Valve Pit to the receiver vessel by approximately 12 feet. In one section alone, the line raises nearly vertically by 10 feet. This transfer line became obstructed on March 28, 1995, and was not successfully cleared until early May, 1995. A water ram was attached to the main header where it enters the C Farm Valve Pit to clear the line. The cost to clear this line was over $41,000, involved a 46 day delay in pumping operations, added 1,000 gallons of flush water to the waste stream, and exposed workers to 50 mrem of exposure. Note that the line became obstructed with two pumps in operation, pumping a combined average of 0.56 gallons of liquid in the 3" pipe. Flow rates from C-102 are expected to decrease below 0.33 gpm within two weeks of resumed pumping. An aggressive flush schedule will be required to maintain the header unobstructed at low flow rates, increasing the amount of water added to the receiver vessel. This transfer line will be reused for stabilization activities during the pumping of 241-C-103 which contains an estimated 133,000 gallons of pumpable liquid.

With the line pluggage, ALARA and cost concerns, it is recommended the tank be declared interim stabilized on the basis of major equipment failure as mandated by the Tank Farms Interim Stabilization Evaluation Procedure, WHC-IP-0842, Volume IV, Section 4.1.

This letter of justification concludes the requirements for declaring Tank 241-C-102 interim stabilized.

Required Signatures:

Judith Burton
~~T. Morton~~, Manager Interim Stabilization Project

Signature Judith Burton Date 9/21/95

W. E. Ross, Manager East Tank Farms Transition Project

Signature [illegible] Date 9/21/95

J. H. Wicks, Director, Tank Farms Transition Project

Signature [illegible] Date 21 Sep 95

Single-Shell Tank Interim Stabilization Evaluation Form

TANK: **241-C-103**

(Jet Pumping only) Reason for stopping jet pumping:

[ ] Meets 0.05 gpm criteria, Date of Shutdown _____

[x] Major equipment failure, Date of Shutdown 2/9/03

Tank Waste Surface Level Condition and Comments: _____ See Description on Page 2 _____

Evaluation: (See continuation page for calculations and additional comments)

Photo/video review completed – Date of most recent photo/video 03/03/03

[x] Tank history, temperature profile and intrusion reviews completed and no anomalies identified

Starting Liquid Level	80.8 "	Method Enraf	Date 11/29/02
Final Liquid Level	29.3 "	Method Dip Tubes	Date 7/02/03
Total Net Pumped Volume			113,800 gallons
Capillary Height Used in Calculation			0 inches
Final Solids Volume			72.2 Kgal
Final Average Flow Rate			0.15 gpm
Porosity			.17
Supernatant Volume Remaining			600 gallons
Drainable Interstitial Liquid			10.2 Kgal
Drainable Liquid Remaining			10.8 Kgal
Pumpable Liquid Remaining			5.9 Kgal

[x] Justification letter attached (Interim Stabilization System Engineer) **7G320-03-mjs.005**

Disposition of Tank:

[x] Tank Interim Stabilized
[ ] Tank Not Interim Stabilized; Restart Pumping

Evaluation prepared by Retrieval/Closure System Engineer: _____ Date 7/11/2K3 MJS 7/11/03

Closure Projects Engineering Support Process Engineer: Wm Blaine Barton Date 7/11/03

APPROVED BY:

Manager, Retrieval/Closure System Engineering _____ Date 7/11/03

Manager, Closure Projects System Engineering _____ Date 7/11/03

Manager, SST System Engineering KJ HULL _____ Date 7/11/03

Single-Shell Tank Interim Stabilization Evaluation Form (continued)

EVALUATION CALCULATIONS AND COMMENTS:

TANK: **241-C-103**

OBJECTIVE/PURPOSE:

This Single-Shell Tank Interim Stabilization Evaluation provides the data and supporting calculations involved in declaring single-shell waste storage tank 241-C-103 interim stabilized. The criteria to declare 100-series jet-pumped single shell waste storage tanks to be interim stabilized for interim stabilization are: 1) the tank contains less than 50,000 gallons of drainable interstitial liquid (DIL), 2) the tank contains less than 5,000 gallons of supernatant, and 3) the measured maximum pump-out or in-flow rate is less than 0.05 gallons per minute. In the event of major equipment failure, Criteria 3 may be waived with a letter of justification and management approval. The 100-series tanks are the 500, 750, and 1000 K gallon single-shell tanks (SSTs) located in the SST farms.

ANALYSIS METHOD:

The analysis method used for this evaluation relied upon the criteria and equations established in HNF-2978, Rev. 5, *Updated Pumpable Liquid Volume Estimates and Jet Pump Durations for Interim Stabilization of Remaining Single-Shell Tanks.* Calculations presented will utilize the dip tube basis method presented in RPP-5556, Rev. 0, *Updated Drainable Interstitial Liquid Volume Estimates for 119 Single-Shell Tanks Declared Stabilized.* For dip tube basis calculations, this method assumes a zero inch height of capillary liquid retention in the solid waste matrix, as the dip tubes are not in direct contact with the solid waste volume of the tank. See the **Calculations** section for equation definitions.

This evaluation follows the applicable guidelines of the *Engineering Calculations* procedure, TFC-ENG-DESIGN-C-10, Revision A and the technical basis and formatting requirements of *Tank Farm Facility Interim Stabilization Evaluation* procedure, HNF-IP-0842, Volume IV, Section 4.1. When complete, this evaluation will be formally released as part of a direct revision to HNF-SD-RE-TI-178, *Single-Shell Tank Leak Stabilization Record.*

TANK DESCRIPTION:

The waste in 241-C-103 is a dry, cracked brown sludge type surface. The surface of the waste appears to be relatively level and to have more cracking near the tank walls. The Enraf probe is approximately the same level as the waste level at the saltwell screen. There is a roughly 3 foot diameter supernatant pool around the saltwell screen. There are also small supernatant pools around two risers and many small liquid pockets across the center waste surface. Saltwell pumping yielded 113,800 gallons of net waste from 241-C-103, while using 1,700 gallons of water for flushes and 2,100 gallons of water for dilution. The Enraf is located 33.25 feet from the tank center and reads 33.65 inches as of 04/29/03. Currently the Enraf is out-of-service and there is no liquid observation well (LOW) installed in the tank. Dip tube readings are currently collected and recorded via work package WS-03-0299. The average dip tube level obtained from data from 02/24/03 through 7/02/03, adjusted for a dip tube offset of 3.00 inches and assuming a zero inch capillary height, is 29.33 inches. All reported levels are based off the centerline of the tank's dished bottom. Calculations do not take into account any retained gas within the waste.

Evaluation Prepared by _____ Date 7/11/2003 7/11/03

Evaluation Checked by _____ Date 7/11/03

Single-Shell Tank Interim Stabilization Evaluation Form (continued)

EVALUATION CALCULATIONS AND COMMENTS:

TANK: **241-C-103**

INPUT DATA & ASSUMPTIONS

Final Enraf Reading (04/29/03) = 33.65 inches ~ 33.7 inches

Average Dip Tube Readings from WS-03-0299 (02/24/03 - 07/02/03) = 26.33 inches ~ 26.3 inches

Dip Tube Offset (Distance of lowest dip tube leg from tank bottom) = 3.00 inches

Final Adjusted Dip Tube Level = 26.33 inches + 3.00 inches = 29.33 inches ~ 29.3 inches

Net Waste Pumped (data through 02/9/03 on \\AP012\DPU) = 113,763 gallons

Initial Liquid Level at Start of Pumping (Enraf - 11/29/03) = 80.80 inches ~ 80.8 inches

Capillary Height (based on dip tube basis) = 0 inches @

Tank Dished Bottom Volume (Lower 12.0" Height) = 12,500 gallons **

Supernatant Volume (03/03/03 In-Tank Video Estimate) = 500 gallons

Raw Water Added to Tank Since Video = 100 gallons

Unpumpable Liquid Height Constant = 18 inches **

Height of Tank Dish = 12 inches **

Assumed Sludge Porosity = 17% ** #

For 100-series (75' dia.) tanks (500, 750, and 1000K gallon SSTs), 1 inch equals 2750 gallons. **

EQUATIONS

D.I.L. = Drainable Interstitial Liquid **
= ({[Final Adjusted Dip Tube Level – Capillary Height – Height of Tank Dish] * 2750 gallons/inch} * Assumed Sludge Porosity) + (Tank Dish Volume * Assumed Sludge Porosity)

D.L.R. = Drainable Liquid Remaining **
= D.I.L. + Supernatant Volume

P.L.R. = Pumpable Liquid Remaining **
= D.L.R. – ([{(Unpumpable Liquid Height Constant – Height of Tank Dish) * 2750 gallons/inch} + Dish Volume] * Assumed Sludge Porosity)

@ Reference RPP-5556, Revision 0
** Reference HNF-2978, Revision 5
# There is no way to determine porosity during pumping due to insufficient data.

Evaluation Prepared by _____ Date 7/11/2003 7/11/03

Evaluation Checked by _____ Date 7/11/03

Single-Shell Tank Interim Stabilization Evaluation Form (continued)

EVALUATION CALCULATIONS AND COMMENTS:

TANK: **241-C-103**

RESULTS/CALCULATIONS

DIP TUBE BASIS:

DIL = [(29.3" – 0" – 12") * 2750 gal/in] * 0.17 + (12,500 gallons * 0.17)

= [(47,575 gallons + 12,500 gallons) * 0.17] = 10,213 gallons (10.2 Kgal)

DLR = DIL + Supernatant = 10,213 gallons + 600 gallons = 10,813 gallons (10.8 Kgal)

PLR = DLR – ([{(18" – 12") * 2750 gallons/inch} + 12,500 gallons] * 0.17)

= 10,813 gallons – [(16,500 gallons + 12,500 gallons) * 0.17]

= 10,813 gallons – 4,930 gallons = 5,883 gallons (5.9 Kgal)

Note: RPP-12324, *Interim Stabilization Calculations: Pumpable Liquid Remaining,* estimates 4,000 gallons of waste in "slow draining region" which will drain too slowly to be pumped.

SOLIDS VOLUME:

SOLIDS CALCULATION FIGURE

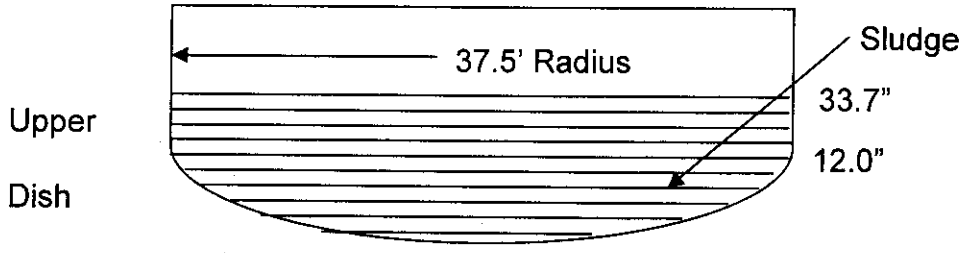

Volume (Upper) = Volume of [(33.7 in – 12 in) * 2750 gal/in]

Volume (Upper) = (16.7 in.* 2750 gal/in) = 59,675 gallons

Volume (Dish) = 12,500 gallons

Volume (Tot) gallons = 59,675 + 12,500 = 72,175 gallons = 72.2 Kgal

Evaluation Prepared by _____ Date 7/11/2003 MOB 7/11/03

Evaluation Checked by _____ Date 7/11/03

EVALUATION CALCULATIONS AND COMMENTS:

TANK: **241-C-103**

FLOW DATA:

The final pump rate is found by data obtained from saltwell pumping procedure TO-220-103 data sheets from 0130 hours on February 8, 2003, to 1130 hours on February 9, 2003 that show a total of 305 gallons of waste were pumped over the time period of 2040 minutes (34.0 hours), while the pump ran in BYPASS mode. Automatic mode was not utilized due to plugging problems associated with the specific gravity dip tube leg. These data were taken during the final two days of pumping operations on 241-C-103 prior to equipment failure on February 9, 2003. Pumping of 241-C-103 had been continuous since 0250 hours on January 28, 2003 for 299 hours of operation. The following equation shows the pumping rate for the final days of the pump run:

Pump Rate = [305 gallons/2040 minutes] = (0.15 gpm)

The flow rate exceeds the minimum stabilization flow rate of 0.05 gallons per minute. The flow rate of 0.15 gallons per minute will be used in the letter of justification for major equipment failure to calculate expected pumping durations and water usage if pumping of 241-C-103 is restarted.

OPEN ITEMS:

None.

REFERENCES:

HNF-IP-0842, Volume IV, Section 4.1, *Tank Farm Facility Interim Stabilization Evaluation*

HNF-SD-RE-TI-178, Rev. 8, *Single-Shell Tank Leak Stabilization Record*

HNF-2978, Rev. 5, *Updated Pumpable Liquid Volume Estimates and Jet Pump Durations for Interim Stabilization of Remaining Single-Shell Tanks*

RPP-12324, Rev. 0, *Interim Stabilization Calculations: Pumpable Liquid Remaining*

RPP-5556, Rev. 0, *Updated Drainable Interstitial Liquid Volume Estimates for 119 Single-Shell Tanks Declared Stabilized*

TFC-ENG-DESIGN-C-10, Rev. A, *Engineering Calculations*

TO-220-103, Rev. A-4, *Perform 241-C-103 Saltwell Pumping*

WS-03-0299, *241-G Weight Factor and Specific Gravity Readings*

CONCLUSIONS/RECOMMENDATIONS:

241-C-103 has met the applicable criteria for declaration of interim stabilization based on major equipment failure. See Page 1 for a summary and final tank disposition and approvals, and letter 7G320-03-MJS.005 "Justification for declaring 241-C-103 interim stabilized, due to major equipment failure."

ATTACHMENTS:

All record attachments, raw data, and calculations for this evaluation, as well as other information may be found in the tank history file maintained by Interim Stabilization Engineering in accordance with the requirements in HNF-IP-0842, Vol. 4 Section 4.1, paragraph 3.4.1.

Evaluation Prepared by _____ Date 7/11/2003 MSB 7/11/03

Evaluation Checked by _____ Date 7/11/03

INTEROFFICE MEMO

CH2MHILL
Hanford Group, Inc.

From:	Retrieval/Closure System Engineering	7G320-03-mjs.005
Phone:	373-2408 S7-24	
Date:	July 14, 2003	
Subject:	JUSTIFICATION FOR DECLARING 241-C-103 INTERIM STABILIZED, DUE TO MAJOR EQUIPMENT FAILURE	

To: T. L. Hissong S7-83

Copies:				
	W. B. Barton	R2-11	D. C. Lowe	R2-58
	R. J. Cash	S7-90	D. J. Saueressig	S7-20
	J. M. Conner	S5-13	M. J. Sutey	S7-24
	K. C. Dorwick	S7-83	S. L. Swaney	S7-24
	R. A. Flores	S7-20	W. T. Thompson	S7-70
	T. M. Horner	S7-13	R. P. Tucker	S7-20
	M. J. Holms	S7-24	D. T. Vladimiroff	S7-20
	K. J. Hull	T4-08	MJS/LB	
	M. R. Koch	S7-83		

Saltwell pumping of Tank 241-C-103 began on November 29, 2002, and continued until February 9, 2003, when the saltwell jet pump shut down automatically due to an alarm from the pump pit leak detector. Subsequent investigation found that the JR-1 valve, near the bottom of the pump pit, had failed resulting in a spray leak of waste inside the pit containment. A total of 113,800 gallons of liquid waste was transferred to 241-AN-106 before the failure occurred. Waste volume calculations show 10,200 gallons of drainable interstitial liquid remaining in the tank, of which 5,900 gallons is estimated to be pumpable. Video observation reveals there is approximately 500 gallons of supernatant liquid remaining and an equipment flush after the video was taken added another 100 gallons. *Tank Farm Facility Interim Stabilization Evaluation*, HNF-IP-0482, Volume IV, Section 4.1 requires a jet pumped waste tank to contain less than 50,000 gallons of drainable interstitial liquid, less than 5,000 gallons of supernatant liquid, and achieve a maximum pump out or in-flow rate of 0.05 gallons per minute for interim stabilization. However, a single-shell waste tank can be declared interim stabilized by major equipment failure by meeting the drainable interstitial liquid and supernatant quantities, but without meeting the 0.05 gpm criteria. Tank 241-C-103 meets the criteria for interim stabilization due to major equipment failure.

The hydraulic properties and pumping history of waste tanks in C-Farm are similar and indicate that achieving zero pumpable liquid in 241-C-103 is not likely. A quantitative assessment of predicted pumpable liquid remaining was performed per RPP-12324 "Interim Stabilization Calculations: Pumpable Liquid Remaining". Table 3-3 of this document specifies the predicted quantity of pumpable liquid that will remain once the stabilization criteria have been fulfilled. The predicted pumpable liquid remaining for 241-C-103 is 4,000 gallons. If the 241-C-103 saltwell pump was replaced and restarted, the remaining pumpable volume of the tank will be the difference between 5,900 gallons and 4,000 gallons. Therefore, the remaining pumpable volume of 1,900 gallons will be assumed for the following calculations in this evaluation.

If repairs at 241-C-103 were completed, the time to pump the remaining liquid from the tank is dependent upon the flow rates of the liquid wastes into the saltwell screen. The current flow rate of liquid into the saltwell screen at 241-C-103 is calculated at 0.14 gpm, or 202 gallons per day (gpd). By observation, the flow rate of liquid into the saltwell screen will decrease and approach 0.05 gpm (72 gpd) as the interstitial liquid level drops. Therefore, to determine the estimated time to pump 241-C-103, an average rate of 0.095 gpm (137 gpd) at 50% operating efficiency is assumed. Using this rate and efficiency, the time to remove the remaining pumpable liquid of 1,900 gallons from tank 241-C-103 is approximately 4 weeks.

Over this 4-week period, numerous system and transfer line flushes would be required to prevent the typical plugging seen with saltwell transfer systems. The transfer line hold up volume of 117 gallons necessitates frequent flushes. For example, from February 3, 2003, to February 9, 2003, a total of 225 gallons of flush water were required to maintain the transfer system operable. During this time a total of 1,300 gallons of waste was pumped. No dilution is currently required to operate the 241-C-103 saltwell system. If pumping was restarted and similar flush volumes were required for operability, an additional 900 gallons would be added to the waste stream to remove the estimated 1,900 gallons of liquid from 241-C-103.

To facilitate the replacement of the failed jet pump, the pump pit cover plate at 241-C-103 would have to be removed and workers would be required to work over the open pit. Before the JR-1 valve could be repaired, extensive preparation of the pump pit is required to minimize the spread of contamination. An analysis of the task was prepared by the Radiological Control planner. This evaluation details the level of radiation exposure for each member of the field crew performing the job. The work to prepare the pump pit and repair the JR-1 valve would result in a dose exposure estimated to be 610 mrem for the job. One member of the team, the pipe fitter, will be subjected to nearly two thirds of the estimated dose exposure (388 mrem/job) for this job.

Costs for repair and continued operation of 241-C-103 are based on Single-Shell Tank Interim Stabilization, Revision 3 Working Schedule Baseline. It is estimated that it would cost $79,000 to repair the leaking valve and meet waste disposal costs at 241-C-103. If repairs were made and pumping was restarted, the project expenses to calibrate and maintain the current equipment at 241-C-103 for the projected 4-week pumping schedule is estimated to cost $27,500. The total project cost for restart and continued operation is $106,500.

Based upon these evaluations of ALARA principles, remaining pumpable liquid, generation of excess wastes, and cost concerns, it is recommended that Tank 241-C-103 be declared interim stabilized on the basis of major equipment failure as defined by *Tank Farm Facility Interim Stabilization Evaluation* procedure, HNF-IP-0842, Volume IV, Section 4.1.

If you have any questions, please call me on 373-2408, or Mr. Stephen L. Swaney on 373-3472.

Michael J. Sutey, Manager
Retrieval/Closure System Engineering
CH2M HILL Hanford Group, Inc.

SLS/lsc

CONCURRENCE:

Date 7-14-03

M. R. Koch, Director,
Retrieval/Closure Engineering
CH2M HILL Hanford Group, Inc.

Page 1 of 2

STABILIZATION EVALUATION
NON-JET PUMPED TANKS

TANK: 241-C-104

EVALUATION (see continuation page for calculations and additional comments):

[X] Photograph review completed - Date of most recent photographs: 4-14-88

[X] Tank history review completed

[X] Tank temperature profile review completed

Surface Description: 1988 photos indicate dry sludge-dark, dry cracked clay like surface with no apparent supernatant. 1983 photos indicate a small liquid puddle under the photography riser and 1988 photos show the area dry. Date 9-22-89

Solids Level 102.7 Date 9-19-89 Method FIC/Photographs

Liquid Level -- Date -- Method --

Solids Volume 294,925

Estimated Drainable Liquid Remaining Volume 10,912 gallon

Average Maximum Tank Temperature, past 6 months 87°F

Estimated Supernatant Volume 0

[NA] Cost/Benefit Analysis attached

Evaluation Performed by DC Boyles Date 9/26/89 Checked by [signature] Date 9/26/89

DISPOSITION OF TANK:

[X] Tank Interim Stabilized at 10,912 gallons of drainable liquid remaining

[ ] Tank not Interim Stabilized; stabilization activities resumed

APPROVED BY:

Manager, Single-Shell Tanks [signature] Date 9/22/89

Manager, Tank Farm Programs [signature] Date 9/25/89

Manager, Tank Farms [signature] Date 9/26/89

DISTRIBUTION: SST Tank File, Tank Farm Surveillance Analysis & Support, Defense Waste Safety Section, Approval Signatures

TANK: 241-C-104

EVALUATION CALCULATIONS AND COMMENTS:

Tank 241-C-104 will be stabilized based on the core sample data taken during April 1986 and on photographs taken on April 14, 1988.

Documents SD-RE-TI-101 and WHC-CM-5-7 section 1.11 allows the use of core sample data to determine the remaining drainable interstitial liquid in the tank. A core sample was obtained during April 1986 and the results were published in document SD-RE-TI-199. The liquid content data of each core segment was taken from this document and the tank liquid volume was calculated. The results show little or no drainable liquid in the upper 82 inches of the tank and 1,935 gallons, representing a 3.7% porosity, in the lower 19 inch segment. For a conservative estimate in this evaluation, the 3.7% was assumed throughout the tank. Using this porosity gives a current estimate of potentially drainable liquid in the tank at 10,912 gallons. Normally the bottom 12 inches of the waste is assumed to be non drainable per SD-RE-TI-101 and WHC-CM-5-7, but due to the nature of core sampling, no allowance will be made for capillary action in the stabilization evaluation.

Comparison of in-tank photographs taken in tank 241-C-104 on November 11, 1983 and April 14, 1988, indicate the surface of the waste material has dried. The waste surface in 1983 was a wet muddy appearing material with isolated puddles of liquid. Since that time, the surface has become dry and cracked (4/88 photos). Photos taken in 1983 indicate the tank had about a 75% solid surface at 102.7 inches. The 1988 photos show considerable drying. The 102.7 inch reading carried in the waste status summary was used to conservatively determine total waste volume in this evaluation.

The WHC-CM-5-7 guideline states that photos under three months old must be used. Photos used in this evaluation are 17 months old and their use is justified based on a review of level monitoring data indicating that no liquid intrusions have occurred in the last 17 months. For this reason, the three month guideline will be waived.

Total Waste = (Solids Level) (2750) + 12,500 (dished bottom)
= (102.7 in) (2750 gal/in) + 12,500 gallons
= 294,925 gallons

Solids Volume = Total Waste - Supernatant Volume
= 294,925 - 0 = 294,925 gallons

Drainable Interstitial Liquid (DIL) = (Total Waste) (3.7% porosity)
= 10,912 gallons

Note: A capillary height of 12" is waived in this calculation.

Drainable Liquid Remaining = DIL + Supernatant
= 10,912 + 0
= 10,912 gallons

Calculations made by VC Boyle Date 9/22/89

Checked by R A Blume Date 9/22/89

Single Shell Tank Interim Stabilization Evaluation Form

TANK: 241-C-105

Page 1 of 2

Reason Jet Pumping Halted: N/A

[ ] Meets 0.05 gpm criteria, Date of Shutdown N/A
[ ] Major equipment failure, Date of Shutdown N/A

Surface Condition & Comments: THE WASTE SURFACE, WHICH IS LIGHT YELLOW IN COLOR, APPEARS FLAT & UNIFORM. A FIVE TO EIGHT FOOT WIDE SHORELINE OF SOLIDS SURROUNDS A BROWNISH LIQUID POOL APPROXIMATELY ONE INCH DEEP. THE FIC IS IN CONTACT WITH A SOLIDS WASTE SURFACE.

Evaluation: (See continuation page for calculations and additional comments)

Photograph review completed - Date of most recent photograph VIDEO 08/30/95
Tank history review completed. [X]
Tank temperature profile reviews completed. [X]

(Jet) Starting Liquid Level 48.0 in Method FIC Date 05/07/93
Final liquid level 44.0 in Method FIC Date 10/23/95

(All exc. Aux) Total Net Pumped Volume NO LIQUID PUMPED. LIQUID EVAPORATED = 11.3 kgal
(Jet) Capillary Height Used in Calculation 24 in
Final Solids Volume 131.5 kgal
(Jet) Final Average Flowrate N/A
(Jet) Calculated Porosity 45% PER REQUIREMENTS OF WHC-IP-0842, VOL IV SECTION 4.1.
Supernatant 2.0 kgal
(All exc. Aux) Drainable Interstitial Liquid 29.5 kgal
(All exc. Aux) Drainable Liquid Remaining 31.5 kgal
(All exc. Aux) Pumpable Liquid Remaining 9.2 kgal
(Jet & Aux) [ ] Justification letter attached

Disposition of Tank:

[X] Tank Interim Stabilized
[ ] Tank Not Interim Stabilized; Restart Pumping

Evaluation Performed by: David Bragg Date 10/26/95

Checked by: VC Boyles Date 10/30/95

APPROVED BY:

Team Lead, Stabilization Engineer VC Boyles Date 10/30/95
Manager, Interim Stabilization Engineering [illegible] Date 10/30/95
Manager, East or West Tank Farm Transition Project [illegible] Date 10/31/95

Distribution: TWRS Nuclear Safety, Surveillance Engineering, Systems Engineering, Single Shell Tank History File, TPA Integration Control, Approving Managers, Evaluation Performer, Team Lea and Checker signatures.

Figure 2. Interim Stabilization Evaluation for Jet-Pumped Tanks (Sheet 2 of 2)

EVALUATION CALCULATIONS AND COMMENTS: TANK 241-C-105

SURFACE LEVEL DATA: (05/93 - 10/95)

Net volume evaporated from 241-C-105 between 05/93 to 10/95 = 12,000 gal

Starting Surface Level 05/07/93 (FIC) = LL_{start} = 48.0 in
Ending Surface Level (FIC) 10/23/95 = LL_{end} = 44.0 in
Decrease in Surface Level = LL_{delta} = (LL_{start} - LL_{end}) = 4.0 in

Final Solids Volume = (44.0) in * (2,750) gal/in - 2,000 gal supernatant + 12,500 gal = 131.5 kgal

No jetpumping has occurred in 241-C-105, nor does interstitial liquid level data exist for this tank. There are no diptubes or LOWs installed in the tank. The drainable and pumpable liquid remaining estimates will be based conservatively on a waste porosity of 45%, per the requirements of WHC-IP-0842, Volume IV, Section 4.1, Paragraph 5.2.

DIL, DLR, PLR CALCULATIONS

Total waste volume = Final Solids Volume + supernatant = (131,225 + 2,000) gal = 133.5 kgal

Drainable Interstitial Liquid (DIL) = (Total Waste - capillary height for sludge tank - supernatant) * porosity = {Liquid Waste Volume - [(24 in)*(2,750 gal/in)] - 2,000 gal}*(0.45)

DIL = {(133,500 gal) - [(24 in) * (2,750 gal/in)] - 2,000 gal} * (0.45) = (133,500 - 68,000) * (0.45) = (65,500) * (0.45) = 29,475 gal = = 29.5 kgal

Drainable Liquid Remaining (DLR) = DIL + Remaining Supernatant

Supernatant = 2 kgal

DLR = DIL + 2,000 gal = 31,475 gal = 31.5 kgal

Pumpable Liquid Remaining (PLR) = DLR - [(unpumpable height) * porosity] = 31,475 gal - [(18 in)*(2,750 gal/in)*(0.45)] = 9,200 gal = 9.2 kgal

The volume of pumpable liquid remaining in 241-C-105 is estimated as 9.2 kgal.

Evaluation performed by: David Bragg Date 10/26/95
Checked by: VC Boyles Date 10/26/95

Single Shell Tank Interim Stabilization Evaluation Form

TANK: 241-C-107 Page 1 of 7

Reason Jet Pumping Halted:

[ ] Meets 0.05 gpm criteria, Date of Shutdown ____
[X] Major equipment failure, Date of Shutdown 07/28/95

Surface Condition & Comments: PHOTO/VIDEO NOT AVAILABLE. SEE THE ATTACHED LETTER.

Evaluation: (See continuation page for calculations and additional comments)

Photograph review completed - Date of most recent photograph SEE ATTACHED LETTER
Tank history review completed. [X]
Tank temperature profile reviews completed. [X]
(Jet) Starting Liquid Level 105.2 IN Method FIC Date 11/19/91
Final liquid level 67.5 IN Method DIPTUBES Date 08/22/95

(All exc. Aux) Total Net Pumped Volume 40.8 kgal
(Jet) Capillary Height Used in Calculation 24 IN
Final Solids Volume 237 kgal
(Jet) Final Average Flowrate 0.13 gpm
(Jet) Calculated Porosity 18.1%
Supernatant Ø kgal
(All exc. Aux) Drainable Interstitial Liquid 24 kgal
(All exc. Aux) Drainable Liquid Remaining 24 kgal
(All exc. Aux) Pumpable Liquid Remaining 15 kgal
(Jet & Aux) [X] Justification letter attached

Disposition of Tank:

[X] Tank Interim Stabilized
[ ] Tank Not Interim Stabilized; Restart Pumping

Evaluation Performed by: D A Bragg Date 08/28/95

Checked by: VC Boyles Date 8/29/95

APPROVED BY:

Team Lead, Stabilization Engineer VC Boyles Date 8/29/95
Manager, Interim Stabilization Engineering [signature] Date 9/11/95
Manager, East or West Tank Farm Transition Project [signature] Date 9/13/95

Distribution: TWRS Nuclear Safety, Surveillance Engineering, Systems Engineering, Single Shell Tank History File, TPA Integration Control, Approving Managers, Evaluation Performer, Team Lea: and Checker signatures.

Figure 2. Interim Stabilization Evaluation for Jet-Pumped Tanks (Sheet 2 of 7)

EVALUATION CALCULATIONS AND COMMENTS: TANK 241-C-107

PUMPING DATA: Campaign I (11/19/91 - 01/28/92)

Net volume pumped from 11/91 to 01/92 = 16,214 gal

Starting Surface Level 11/19/91 (FIC) = LL_{start} = 105.2 in
Ending Liquid Level (FIC) 01/31/92 = LL_{end} = 95.4 in
Decrease in Surface Level = LL_{delta} = (LL_{start} - LL_{end}) = 9.8 in

Note that the above surface levels were based on FIC readings taken in Campaign I, before and after pumping. These readings do not provide adequate data for determination of the interstitial liquid levels (ILL) corresponding with the volume of liquid pumped. Without sufficient data, the ILL, waste porosity, and the estimated liquid remaining in the tank can not be estimated.

The final interstitial liquid level, waste porosity, and the estimated liquid remaining in the tank will be determined based on data collected during the second pumping campaign.

PUMPING DATA/CALCULATIONS Campaign II (09/28/94 - 07/28/95)

Net volume pumped from 09/94 to 07/95 = P_{net} = 24,600 gal
Estimated supernatant pumped = S_{total} = 2,000 gal

Waste Surface level beginning of pumping 09/29/94 (FIC) = 93.3 in
Waste Surface level after pumping 08/08/95 (ENRAF)* = 86.3 in
Decrease in Waste Surface Level = 7.0 in

Final Solids Volume = (86.3) in * (2,750) gal/in + 12,500 gal = 249,825 gal

Interstitial liquid level 09/26/94 (Diptubes)

Weight $Factor_{start}$ = 118.0 in Specific $Gravity_{start}$ = 1.18
WF/SpG = 100.0 in
Adjusted** liquid level = LL = (100.0 - 8.0) in = 92.0 in

Interstitial liquid level 08/22/95 (Diptubes)

Weight $Factor_{end}$ = 89.4 in Specific $Gravity_{end}$ = 1.18
WF/SpG = 75.7 in
Adjusted** ending liquid level = LL_{end} = (75.7 - 8.0) in = 67.7 in

Decrease in Interstitial Liquid Level = LL_{delta} = (LL_{start} - LL_{end}) = 24.3 in

* The ENRAF surface level reading is assumed to represent the average depth of the waste across the surface. This number, and the final solids volume will be readjusted, if necessary, when an in-tank video is taken.

** The diptubes are 8 inches deeper than the manual tape or ENRAF "zero" reading so 8 inches was subtracted from the liquid level reading.

Evaluation performed by: D a Brager Date 08/29/95
Checked by: UC Boyles Date 8/29/95

Figure 2. Interim Stabilization Evaluation for Jet-Pumped Tanks (Sheet 3 of 7)

EVALUATION CALCULATIONS AND COMMENTS: TANK 241-C-107

WASTE POROSITY

Liquid level data and volumes pumped during the second campaign will be used for determining the waste porosity.

Porosity = (Net volume pumped - supernatant pumped) gal/{[Total decrease in liquid level - decrease in liquid level due to supernatant pumped in] * 2,750 (gal/in)}

Between 09/28/94 and 02/20/95, 8,535 gallons were pumped from C-107. Of the volume pumped, approximately 2,000 gallons were supernatant. The interstitial liquid level decreased by 14.3 inches during this period.

P_{1net} = 8,535 gallons
Estimated supernatant pumped = S_{total} = 2,000 gallons
$Porosity_1$ = 6,535 gallons/[(14.3 in) * (2,750 gal/in)] = 0.166 = 16.6%

While jetpumping continued into March, 1995, repeated flushes were required as the transfer line became plugged. By late March, 1995, the main header was completely obstructed, allowing no pumping to occur during the month of April. Consequently, no porosity calculations will be performed for the March-April timeframe. Pumping resumed in May, 1995, after the line was cleared.

Between 05/08/94 and 07/07/95, 6,727 gallons were pumped from C-107. The interstitial liquid level decreased by 13.5 inches during this period.

P_{2net} = 6,727 gallons
Estimated supernatant pumped = S_{total} = 0 gallons
$Porosity_2$ = 6,727 gallons/[(13.5 in) * (2,750 gal/in)] = 0.181 = 18.1%

To remain conservative, a porosity of 18.1% will be used in estimates of drainable and pumpable remaining liquid, instead of the 16.6%.

Evaluation performed by: D a Bragg Date 08/29/95

Checked by: VC Boyles Date 8/29/95

Figure 2. Interim Stabilization Evaluation for Jet-Pumped Tanks (Sheet 4 of 7)

EVALUATION CALCULATIONS AND COMMENTS: TANK 241-C-107

DIL, DLR, PLR CALCULATIONS

ASSUMPTIONS: The waste above the final Interstitial Liquid Level does not contain pumpable liquid.

Total waste volume (below interstitial liquid level I.L.L.) = [(67.7 in)*(2,750 gal/in) + 12,500 gal (dish bottom tank)] = 198,847 gal

Drainable Interstitial Liquid (DIL) = (Total Waste below I.L.L. - capillary height for sludge tank) * porosity.
= {Liquid Waste Volume - [(24 in)*(2,750 gal/in)]}*(0.181)

DIL = {(198,847 gal) - [(24 in) * (2,750 gal/in)]} * (0.181) =
= (198,847 - 66,000) * (0.181) = (132,847) * (0.181) = 24,045 gal = 24 kgal

Drainable Liquid Remaining (DLR) = DIL + Remaining Supernatant
Supernatant = 0 kgal (Assumed volume)

DLR = DIL = 24,045 gal = 24 kgal

Pumpable Liquid Remaining (PLR) = DLR - [(unpumpable height) * porosity]
= 24,045 - [(18 in)*(2,750 gal/in)*(0.181)] = 15,085 gal = 15 kgal

The volume of pumpable liquid remaining in 241-C-107 is estimated as 15,085 gallons or 15 kgal.

Evaluation performed by: D a Briggs Date 08/29/95

Checked by: VC Boyles Date 8/29/95

Figure 2. Interim Stabilization Evaluation for Jet-Pumped Tanks (Sheet 5 of 7)

Letter of Justification for Declaring 241-C-107 Stabilized

Saltwell pumping of Tank 241-C-107 resumed on September 28, 1994, after a two year hiatus. A total of 40,800 gallons of liquid waste was removed from the tank prior to a major equipment failure which halted pumping on July 28, 1995. There is approximately 15,000 gallons of pumpable liquid remaining in the tank.

Repairs required to resume pumping at 241-C-107 would include replacement of the pump and pressure switch, the jetpump jumper (DOV & JR-2 valve), the jetpump lower leg assembly, and the installation of a hydrogen gas monitoring system. It is not economically practical to replace the failed equipment to remove the remaining liquid. It is estimated that it would cost $300,000 to replace the equipment, install a hydrogen gas monitoring system and meet waste disposal costs at 241-C-107. Operating expenses to remove the remaining liquid would also cost an additional $100,000.

In addition, replacing the jetpump lower leg assembly requires the pump and pump plate to be lifted approximately 40 feet into the air. In May, 1995, the lower leg assembly was replaced at 241-C-102. Those repairs resulted in approximately 200 mrem exposure to workers. The 241-C-107 and 241-C-102 pump pits provide nearly equivalent dose rate exposures. However, the repairs at 241-C-107 are far more extensive in nature, and will consequently require more time to complete, increasing the dose exposures to workers. This is not compliant to ALARA principals.

Even if repairs at 241-C-107 were completed, the time to pump the remaining liquid from the tank is still dependent upon the infiltration rates of the liquid waste into the saltwell screen. The average infiltration flow rate of liquid into the saltwell screen at 241-C-107 was 0.13 gpm, or 187 gpd. At 100% pump efficiency and a constant flow rate of 0.13 gpm, it would take over 12 weeks to remove the remaining pumpable liquid from the tank. However, infiltration rates and consequently flow rates, decrease with time as the interstitial liquid level drops. The actual estimated time to remove the remaining pumpable liquid from 241-C-107, based on expected saltwell infiltration rates, is 25 weeks, not accounting for any major equipment problems or operational delays. Pump repairs would not begin until after the hydrogen monitoring system were already installed, since allowing new equipment to remain idle in the saltwell screen greatly increases the probability for pluggage in the footvalve, and the need for future repairs.

Note also that at low pump flow rates (less than 0.2 gpm), for each week of run time, 350 - 700 gallons of flush water will be added to the waste stream to maintain the 241-C-107 transfer system operable. In the last week the 241-C-107 pump operated, a total of 715 gallons of flush water was required to maintain the transfer system operable. This would result in adding between 8,800 and 17,500 gallons of flush water to the waste stream to remove the remaining pumpable liquid (15,000 gallons) from 241-C-107. The required water addition to the waste stream is not compliant to ALARA principles.

Figure 2. Interim Stabilization Evaluation for Jet-Pumped Tanks (Sheet 6 of 7)

Letter of Justification for Declaring 241-C-107 Stabilized (continued)

Stabilization of 241-C-107 Pending In-Tank Video

Tank 241-C-107 was added as a potential hydrogen tank to Appendix B of OSD-T-151-00030, "Operating Specifications For Watch List Tanks," in July, 1995. Currently, there are no video camera/light systems available at Hanford that are approved for performing in-tank videos of hydrogen and potential hydrogen tanks. Further, there are no photos or videos of the 241-C-107 tank waste surface in existence. WHC is attempting to construct a video camera that will meet all the requirements of a Class I, Division I, Group B system. The estimated date of completion of the camera is mid-October, 1995. While it is preferable to obtain an in-tank video prior to stabilizing the tank, sufficient data exists to show that the volume of remaining supernatant is less than 5,000 gallons.

For every 2,750 gallons of supernatant transferred, the surface level in Tank 241-C-107 decreases by one inch. If the surface level decreases by less than one inch for every 2,750 gallons transferred from a waste tank, then the supernatant has been effectively removed.

The waste surface level at 241-C-107 has been monitored throughout the pumping campaign. Pumping data indicates that the surface level rate of decrease from January, 1995, through July, 1995, was less than one inch for every 2,750 gallons pumped. For example, during January, 1995, approximately 3,000 gallons were pumped from 241-C-107. The surface level decreased by only 0.7 inches, characteristic of waste settlement after pumping interstitial liquid from a waste tank.

While it is possible that small pools of supernatant may still exist on the waste surface, isolated from the saltwell screen, pumping and surface level data provide adequate evidence that Tank 241-C-107 contains less than 5,000 gallons of supernatant. For this evaluation, 0 gallons of supernatant will be assumed.

WHC intends to perform an in-tank video of 241-C-107 once an approved camera/video system is available, and will provide updates to the Waste Status Summary Report and Interim Stabilization Evaluation, when additional information is obtained from the video.

Figure 2. Interim Stabilization Evaluation for Jet-Pumped Tanks (Sheet 7 of 7)

Letter of Justification for Declaring 241-C-107 Stabilized

Stabilization of 241-C-107 Pending In-Tank Video (continued)

The tank currently meets the established criteria, except for the in-tank video requirement, for declaring single-shell tanks interim stabilized as mandated by the Tank Farms Interim Stabilization Evaluation Procedure, WHC-IP-0842, Volume IV, Section 4.1.

This letter of justification concludes the requirements for declaring Tank 241-C-107 interim stabilized.

Required Signatures:

J. G. Burton, Manager Interim Stabilization Project

Signature Judith Burton Date 9/11/95

J. H. Wicks, Manager East Tank Farms Transition Project

Signature [illegible] Date 9/13/95

J. L. Lee, Director Tank Farms Transition Project

Signature JLee Date 9-14-95

RECEIVED
G.T. DUKELOW

INTERIM STABILIZATION EVALUATION - NON-JET PUMPED TANKS

Tank: 108-C

Evaluation (see Continuation Page for calculations and additional comments):

[X] Photograph review completed - Date of most recent photographs 12-5-1974

[X] Tank history review completed

[X] Tank temperature profile review completed

Surface Description: Solids and liquid measurements and visual inspection indicate the surface is solids. Available photographs were taken before the tank was removed from service. Recent attempts to take photographs have been unsuccessful because of haze. the tank was saltwell pumped, and the surface level has not changed since then. Date 2-24-84

Solids Level 19.5" Date 8-3-1979 Method solids weight

Liquid Level 19.5" Date 2-21-1984 Method manual tape

Solids Volume 66,000 gal

Estimated Drainable Liquid Volume 0

Average Maximum Tank Temperature, past 6 months 83°F

Estimated Supernatant Volume 0

[ ] Cost/Benefit Analysis attached

Evaluation Performed by N Bell Date 2-22-84 Checked by JSR Date 2-24-84

Disposition of Tank:

[X] Tank Interim Stabilized at 0 gallons of drainable liquid

[ ] Tank not Interim Stabilized; stabilization activities resumed

Approved by: Manager, TF&EPC [signature] Date 2/24/84

Manager, TFS&O G.T. Dukelow Date 2-27-84

Program Manager [signature] Date 3-9-84

DISTRIBUTION: TF&EPC Tank File, Tank Farm Surveillance Analysis, Approval Signatures

INTERIM STABILIZATION EVALUATION - NON-JET PUMPED TANKS

(CONTINUATION PAGE)

Evaluation Calculations and Comments

TANK: 108-C

Solids and liquid measurements and visual inspection indicate the surface is solid.

Solids level = 19.5"

Liquid level = 19.5"

Supernatant liquid = 0

Solids volume = 19.5" x 2750 gal/in. + 12,500 gal = 66,000 gal.

Drainable Interstitial Liquid (DIL) = (Solids - Capillary Height x 2750 gal/in. x Porosity

For sludge, capillary height is estimated to be 24" and porosity to be 0.125

DIL = (66,000 - 24 x 2750) x 0.125 = 0

Total Drainable Liquid = DIL + Supernatant = 0

If the sludge were to act like saltcake (capillary height of 12" and porosity of 0.45),

DIL = (66,000 - 12 x 2750) x 0.45 = 15,000 gal

Total Drainable Liquid = 15,000 gal.

This is far below the 30,000 gal criterion for pumping interstitial liquid.

Calculations by Nancy E Bell Checked by [illegible]

INTERIM STABILIZATION EVALUATION - NON-JET PUMPED TANKS

Tank: 109 C

Evaluation (see Continuation Page for calculations and additional comments):

[X] Photograph review completed - Date of most recent photographs 1/30/76

[X] Tank history review completed

[X] Tank temperature profile review completed

Surface Description: 1976 photos show a liquid surface. 1974 photos show cloudy liquid with oil. No solids around edge. More recent photos have been too hazy even though a portable exhauster was used. Date 1976 and 1974

Solids Level 18.0" Date 12/31/75 Method manual tape

Liquid Level 19.5" Date 10/31/83 Method manual tape

Solids Volume 62,000 gal

Estimated Drainable Liquid Volume 4100 gal.

Average Maximum Tank Temperature, past 6 months 86°F

Estimated Supernatant Volume 4100 gal.

[ ] Cost/Benefit Analysis attached

Evaluation Performed by N Bell Date 11/15/83 Checked by TDK Date 11/16/83

Disposition of Tank:

[X] Tank Interim Stabilized at 4100 gallons of drainable liquid

[ ] Tank not Interim Stabilized; stabilization activities resumed

Approved by: Manager, TF&EPC R. A. Van Meter Date 11/16/83

Manager, TFS&O [signature] Date 11-28-83

Program Manager [signature] Date 11-29-83

DISTRIBUTION: TF&EPC Tank File, Tank Farm Surveillance Analysis, Approval Signatures

INTERIM STABILIZATION EVALUATION - NON-JET PUMPED TANKS

(CONTINUATION PAGE)

Evaluation Calculations and Comments

Calculations made by N E Bell

TANK: 109 C

Checked by Tim D. Kirkpatrick

The liquid level has been stable since 1981 at 19.5".

The solids level was measured at 18". The only central riser has a saltwell screen installed and is weather-covered, so current solids level measurements are not possible.

Supernatant Liquid = (19.5" - 18") x 2750 gal./in.
= 4125 gal.

Solids Volume = 18" x 2750 gal./in. + 12,500 = 62,000 gal.

Drainable Interstitial Liquid (DIL) =
(Solids - Capillary Height x 2750 gal./in.) x Porosity
For sludge, capillary height is estimated to be 24" and porosity = 0.125.
DIL = 0 by definition
For the worst case (assuming sludge acts like salt-cake which has a capillary height of 12" and a porosity of 0.45),
DIL = (62,000 - 12 x 2750) x 0.45 = 13,050 gal.
This value is below the criterion for jet pumping.

Drainable Liquid Volume = DIL + Supernate = 4125 gal.

Figure 2. Interim Stabilization Evaluation for Jet-Pumped Tanks
(Sheet 1 of 5)

TANK: 241-C-110

Page 1 of 5

Reason Jet Pumping Halted:

I. [✓] Meets 0.05 gpm criteria, Date of Shutdown 05/27/95
II. [ ] Major equipment failure, Date of Shutdown _____

Surface Condition & Comments:
VIDEO TAKEN ON 05/23/95. NORTHERN HALF OF WASTE SURFACE IS DRY AND CRACKED. WASTE APPEARS MOIST AT THE TANK CENTER, DARK BROWN IN COLOR. A 3 FOOT DIAMETER POOL SURROUNDS THE SALTWELL SCREEN AT THE TANK CENTER. THE SOUTHERN HALF OF THE WASTE SURFACE HAS APPROXIMATELY 30% OF ITS AREA COVERED BY SUPERNATANT.

Evaluation: (See continuation page for calculations and additional comments)

Photograph review completed - Date of most recent photograph (VIDEO) 05/23/95
Tank history review completed. [✓]
Tank temperature profile reviews completed. [✓]
Starting liquid level 69" Method MANUAL TAPE Date 11/18/95
Final liquid level (after equilibration) 56.7" Method DIP TUBES Date 05/31/95

Total Net Jet Pump Production 15,500
Capillary Height Used in Calculation: 24 in

Final Average Flowrate 0.03 gpm
Calculated Porosity 27 %
Supernatant 900 gal
Drainable Interstitial Liquid 27,600 gal
Drainable Liquid Remaining 28,500 gal
Pumpable Liquid Remaining 15,100 gal

Disposition of Tank:

[✓] Tank Interim Stabilized
[ ] Tank not Interim Stabilized; Jet Pumping Restarted

Evaluation Performed by: David Bugg Date 6/12/95
Checked by: VC Boyles Date 6/12/95

APPROVED BY:

Team Lead, Stabilization Engineering VC Boyles Date 6/12/95
Manager, Tank Stabilization & Engineering Support [signature] Date 6/12/95
Manager, SST Stabilization Program Judith Burton Date 6/12/95
Manager, Tank Farm Operations [signature] for THS. Date 6/12/95

Distribution: Nuclear Facility Safety, Shift/Surveillance Engineering, Systems Engineering, Single-Shell Tank History File, TPA Integration Control, Approving Managers, Evaluation Performer, and Checker signatures.

Figure 2. Interim Stabilization Evaluation for Jet-Pumped Tanks
(Sheet 2 of 5)

EVALUATION CALCULATIONS AND COMMENTS:

TANK: 241-C-110

BACKGROUND

Initial saltwell pumping of Tank 241-C-110 began in November, 1991, and was suspended in January, 1992. Pumping resumed at Tank 241-C-110 on September 28, 1994, and ended on May 27, 1995, after pumping flow rates dropped below 0.05 gpm. For the purposes of interim stabilization, this analysis will be divided into two pumping campaigns. The waste porosity and the estimates of liquid remaining in the tank shall be based on the most current pumping data (Campaign II).

Total net volume of liquid waste pumped from Tank 241-C-110 for the two campaigns is 15,500 gallons.

PUMPING STATUS

Tank 241-C-110 was pumped 6 times during May, 1995, with 2,564 gallons pumped, of which 1,790 gallons was flush water and liquid drainback. On May 18, the net gallons pumped was 2 gallons, while on May 19, the net gallons pumped was only 1 gallon.

After a saltwell system flush, the pump was restarted on May 19. By May 21, the net gallons pumped dropped to 0 gallons. The pump was then shut down due to low flow and was not restarted for 3 days. The infiltration rate of liquid into the saltwell was only 0.03 gpm.

Pumping resumed on May 24 and again was shut down on May 25 due to low flow. The saltwell screen required over 10 hours for liquid infiltration to refill it sufficient to resume pumping.

Pumping was restarted on May 26 and again on May 27. Both times the saltwell screen was empty in less than 2 hours and the pump was shut down due to low flow.

The net volume extracted from Tank 241-C-110 the last three days the pump operated was 59 gallons, 46 gallons, and 44 gallons respectively.

The 241-C-110 pump last operated on 05/27/95.

Evaluation performed by: David Bragg Date 06/12/95

Checked by: VC Boyles Date 6/12/95

Figure 2. Interim Stabilization Evaluation for Jet-Pumped Tanks
(Sheet 3 of 5)

EVALUATION CALCULATIONS AND COMMENTS:

TANK: 241-C-110

PUMPING DATA/CALCULATIONS Campaign I (11/27/91 - 01/28/92)

Net volume pumped from 11/91 to 01/92 = (P_{total} - W_{total}) gal

P_{total} = Total pumped = 9,614 gallons
W_{total} = Flush water = 1,050 gallons
P_{net} = (P_{total} - W_{total}) gal = (9,614 - 1,050) gallons = 8,564 gallons

Starting Liquid Level (Manual Tape): = LL_{start} = 69.0 in
Ending Liquid Level (Manual Tape) = LL_{end} = 64.0 in
Decrease in Liquid Level = LL_{delta} = (LL_{start} - LL_{end}) = 5.0 in

Note that the above liquid levels were based on manual tape readings taken in Campaign I, before and after pumping. These readings do not provide adequate data for determination of the interstitial liquid levels corresponding with the volume of liquid pumped. Without sufficient data, the final interstitial liquid level, waste porosity, and the estimated liquid remaining in the tank can not be accurately estimated.

The final interstitial liquid level, waste porosity, and the estimated liquid remaining in the tank will be determined based on the most current data collected (Campaign II).

LIQUID LEVEL EQUILIBRIUM IN 241-C-110 BETWEEN 01/92 AND 09/94

Between end of pumping on 1/28/92 and restart of pumping on 09/28/94, the liquid level (as measured by the manual tape) increased from 64.00" to 65.5." The liquid baseline level was reset 08/93, from 64.0" to 65.0"

Note that the waste solids on the south section of the tank are at a lower elevation than solids located on the north section of the tank. The manual tape, which is used to determine the surface level is located in Riser 4, on the south side of Tank 241-C-110. Between the end of pumping, Campaign I, and the start of pumping, Campaign II, the liquid level increased from 64.0 inches to 65.5 inches as solids and liquids of the north and south sections settled, reaching a new equilibrium level.

Evaluation performed by: David Bragg Date 06/12/95

Checked by: VC Boyles Date 6/12/95

Figure 2. Interim Stabilization Evaluation for Jet-Pumped Tanks
(Sheet 4 of 5)

EVALUATION CALCULATIONS AND COMMENTS:

TANK: 241-C-110

PUMPING DATA/CALCULATIONS Campaign II (09/28/94 - 05/27/95)

Diptubes provide weight factor and specific gravity readings within a waste tank. The interstitial liquid level at 241-C-110 is determined by dividing its weight factor by its specific gravity, then subtracting 8 inches from the result. The 8 inches is subtracted from the liquid level because 241-C-110 is a dish-bottom tank. The manual tape, which measures surface level, uses the bottom of the tank wall as its reference point, or datum. The diptubes are located 4 inches above the centerline of the dish bottom, or 8 inches below the datum. This means that 8 inches must be subtracted from the liquid level determined by the diptubes to adjust or "zero" the liquid level to correspond with the manual tape reading. Note that in determining the final pumpable liquid remaining, the volume of the dish bottom (12,500 gallons) is multiplied by the estimated tank porosity, and the corresponding product is added to the total pumpable liquid remaining estimate. All waste calculations are made from the zero datum.

Adjusted liquid level 09/29/94 (Diptubes)

Weight $Factor_{start}$ = 82.2 in Specific $Gravity_{start}$ = 1.13
WF/SpG = 72.7 in
Adjusted starting liquid level = LL_{start} = (72.7 - 8.0) in = 64.7 in

Adjusted liquid level 05/31/95 (Diptubes)

Weight $Factor_{end}$ = 73.1 in Specific $Gravity_{end}$ = 1.13
WF/SpG = 64.7 in
Adjusted ending liquid level = LL_{end} = (64.7 - 8.0) in = 56.7 in

Decrease in Liquid Level = LL_{delta} = (LL_{start} - LL_{end}) = 8.0 in

P_{total} = Total pumped = 11,860 gallons
W_{total} = Flush water = 4,933 gallons

Porosity = (Net volume pumped - supernatant pumped) gal/{[Total decrease in liquid level - decrease in liquid level due to supernatant pumped in] * 2,750 (gal/in)}

The waste porosity, required for estimating the pumpable liquid remaining (PLR) in the tank, is as follows: Net volume pumped from 09/94 to 05/95 = P_{net} = (P_{total} - W_{total}) gal = (11,860 - 4,933) gallons = 6,927 gallons liquid waste

Evaluation performed by: David Bragg Date 06/12/95

Checked by: VC Boyles Date 6/12/95

Figure 2. Interim Stabilization Evaluation for Jet-Pumped Tanks
(Sheet 5 of 5)

EVALUATION CALCULATIONS AND COMMENTS:

TANK: 241-C-110

PUMPING DATA/CALCULATIONS Campaign II (09/28/94 - 05/27/95) (continued)

Estimated supernatant pumped = S_{total} = 1,300 gallons (This account for approximately 0.5 in of liquid level decrease which must be subtracted from LL_{delta} when determining porosity)

Porosity of waste P = $(P_{net} - S_{total})/[(LL_{delta} - 0.5)\text{in} * (2{,}750 \text{ gal/inch})]$
P = (6,927- 1,300) gallons/[(7.5 in) * (2,750 gal/in)] = 0.27 = 27%

ASSUMPTIONS: The waste above the final Interstitial Liquid Level is considered unpumpable.

Total liquid waste volume (below interstitial liquid level I.L.L.) = [(56.7 in)*(2,750 gal/in) + 12,500 gal (dish bottom tank)] = 168,425 gal

Drainable Interstitial Liquid (DIL) = (Total Waste below I.L.L. - capillary height for sludge tank) * porosity.
= {Liquid Waste Volume - {[(24 in)*(2,750 gal/in)]}*(0.27)

DIL = {(168,425 gal) - [(24 in) * (2,750 gal/in)]} * (0.27) = 27,600 gal

Drainable Liquid Remaining (DLR) = DIL + Remaining Supernatant
(From the in-tank video, the remaining supernatant volume is estimated as 900 gal. One-sixth of the tank surface is covered in liquid conservatively estimated as 2 inches deep. One inch of liquid = 2,750 gal of waste) Supernatant = (1/6) * (2,750 gal/in) * (2 in) = 900 gal

DLR = (27,600 + 900) gal = 28,500 gal

Pumpable Liquid Remaining (PLR) = DLR - [(unpumpable height) * porosity]
= DLR -[(18 in) * (2,750 gal/in) * (0.27)]

PLR = 28,500 - [(18 in) * (2,750 gal/in) * (0.27)] = 15,100 gal
The volume of pumpable liquid remaining in 241-C-110 is estimated as 15,100 gallons.

INTRUSION PREVENTION

This tank has had prior liquid intrusions. Work is scheduled for the summer of 1995, to slope the C Farm soil cover so that liquid run off (from rain & snow) will be directed away from Tank 241-C-110. Completion of this work will eliminate the known intrusion source.

Evaluation performed by: David Bragg Date 06/12/95

Checked by: VC Boyles Date 6/12/95

INTERIM STABILIZATION EVALUATION - NON-JET PUMPED TANKS

Tank: 111-C

Evaluation (see Continuation Page for calculations and additional comments):

[x] Photograph review completed - Date of most recent photographs 2-25-1970

[x] Tank history review completed

[x] Tank temperature profile review completed

Surface Description: Solids and liquid measurements and visual inspection indicate the surface is solids. Available photographs were taken before the tank was removed from service. Recent attempts to take photographs have been unsuccessful because of haze. The tank was salt-well pumped, and the liquid/solid level has not changed since then. Date 2-24-84

Solids Level 16" Date 12-31-1974 Method solids weight

Liquid Level 16" Date 1-1-1984 Method manual tape

Solids Volume 57,000 gal.

Estimated Drainable Liquid Volume 0

Average Maximum Tank Temperature, past 6 months 83°F

Estimated Supernatant Volume 0

[ ] Cost/Benefit Analysis attached

Evaluation Performed by [illegible] Date 2-22-84 Checked by [illegible] Date 2-24-84

Disposition of Tank:

[X] Tank Interim Stabilized at 0 gallons of drainable liquid.

[ ] Tank not Interim Stabilized; stabilization activities resumed

Approved by: Manager, TF&EPC [illegible] Date 2/24/84

Manager, TFS&O [illegible] Date 2-27-84

Program Manager [illegible] Date 3-9-84

DISTRIBUTION: TF&EPC Tank File, Tank Farm Surveillance Analysis, Approval Signatures

STABILIZATION EVALUATION
NON-JET PUMPED TANKS

TANK: 112-C

EVALUATION (see continuation page for calculations and additional comments):

[X] Photograph review completed - Date of most recent photographs: 9/18/90

[X] Tank history review completed

[X] Tank temperature profile review completed

Surface Description: The surface is brown in color, pot marked, sludge type fine material with small puddles of liquid throughout

Date 9/21/90

Solids Level 33.25" Date 9/18/90 Method Manual Tape

Liquid Level 33.25" Date 9/18/90 Method Manual Tape

Solids Volume 104,000 gallons

Estimated Drainable Liquid Remaining Volume 32,200 gallons

Average Maximum Tank Temperature, past 6 months 80 °F

Estimated Supernatant Volume 200 gallons

DISPOSITION OF TANK:

[X] Tank Interim Stabilized at 32,200 gallons of drainable liquid remaining

[ ] Tank not Interim Stabilized; stabilization activities resumed

Evaluation Performed by J.C. Boyle Date 9/24/90 Checked by [illegible] Date 9/24/90

APPROVED BY:

Manager, Single-Shell Tanks [illegible] Date 9-26-90

Manager, Tank Farm Programs D J Washenfelder Date 9-25-90

Manager, Tank Farms [illegible] Date 9-26-90

DISTRIBUTION: SST Tank File, Tank Farm Surveillance Analysis & Support, Defense Waste Safety Section, Approval Signatures

TANK: 112-C

EVALUATION CALCULATIONS AND COMMENTS:

This tank will be administratively stabilized using the accepted porosity of 45% and one foot capillary height. This tank is classed as a sludge tank.

Supernatant volume from photo = 200 gallons

Drainable Interstitial Liquid (DIL) =

= (Liquid Level - capillary ht)(porosity)(2750 gallons/in) + (vol. in dished bottom)(Porosity)

= (33.25 - 12)(.45)(2750) + 12,500 (.45)

= 31,921 gallons ⇒ Use 32,000 gallons

Drainable Liquid Remaining (DLR) = DIL + Supernatant

= 32,000 + 200

= 32,200 gallons

Pumpable Liquid Remaining = DLR − 6 K gallons

= 32,200 − 6,000

= 26,200 gallons

Calculations made by VC Boyles Date 9/24/90

Checked by Robert Sigmburgen Date 9/24/90

INTERIM STABILIZATION EVALUATION

TANK NUMBER: 201 C EFFECTIVE DATE: 3-31-82

LIQUID LEVEL & RISER NO. 16.50"

SOLIDS LEVEL & RISER NO. NA

EST. SUPERNATE LIQUID VOLUME 600 Gal.

EST. INTERSTITIAL LIQUID VOLUME 0

TEMPERATURE: 65° F.

IS THIS TEMPERATURE A PROBLEM?

yes ____ no X unknown

IS THERE A POTENTIAL DOME LOAD PROBLEM? yes ____ no X

PHOTOGRAPH EVALUATION:

Photographs taken 1/06/81 (when the surface level was 17.25") indicate a surfac that is mostly shallow liquid 1 to 4 inches deep and with a 1-2 foot wide band of exposed sludge around most of the tank perimeter.

COMMENTS:

201 C is currently listed as inactive, the amount of liquid remaining cannot be practically removed. Therefore reclassification of this tank to primary stabilized is justifiable.

Prepared By: 3/31/82

Reviewed By: 3/31/82

INTERIM STABILIZATION EVALUATION

TANK NUMBER: 241-C-202 EFFECTIVE DATE: 8-10-81

LIQUID LEVEL & RISER NO. 10.3" R-4

SOLIDS LEVEL & RISER NO. 8.0"

EST. SUPERNATE LIQUID VOLUME less than 500 gallons

EST. DRAINABLE INTERSTITIAL LIQUID VOLUME 0

TEMPERATURE: 57 F

IS TANK HEAT LOAD A PROBLEM?

yes ____ no X unknown ____

IS THERE A POTENTIAL DOME LOAD PROBLEM? yes ____ no X

PHOTOGRAPH EVALUATION: Photo Date - December 16,1980

Exposed sludge is seen over approximately 60 percent of the waste surface. The liquid pool portion is ungulate shaped and appears to be quite shallow. The maximum pool depth at the sidewall is estimated to be less than three(3) inches, and the liquid level gauge plummet is seen to be above the liquid surface. By photo interpretation, the volume of the pool is estimated to be less than 500 gallons.

COMMENTS:

Prepared By: Clement M. Walker 9-11-81

Reviewed By: V. Dennis Nargin

INTERIM STABILIZATION EVALUATION

TANK NUMBER: 203 C EFFECTIVE DATE: 3-31-82

LIQUID LEVEL & RISER NO. 29.0" SOLIDS LEVEL & RISER NO. NA

EST. SUPERNATE LIQUID VOLUME 500 Gal. EST. INTERSTITIAL LIQUID VOLUME 0

TEMPERATURE: 79° F. IS THIS TEMPERATURE A PROBLEM?

yes ____ no X unknown ____

IS THERE A POTENTIAL DOME LOAD PROBLEM? yes ____ no X

PHOTOGRAPH EVALUATION:

Photographs taken 12/16/80 (when surface level reading was 27.5") indicate 60 to 70% exposed sludge and the remainder a shallow pool 1 to 4 inches deep.

COMMENTS:

203 C is currently listed as inactive. The amount of liquid remaining can not be paractically removed. Therefore, reclassification of this tank to primary stabilized is justifiable.

Prepared By: [signature] 3/31/82

Reviewed By: [signature] 3/31/82

Interim Stabilization Evaluation

TANK NUMBER: TK-204-C

EFFECTIVE DATE: 9-10-82

LIQUID LEVEL & RISER NO. 18"

SOLIDS LEVEL & RISER NO. NA

EST. SUPERNATE LIQUID VOLUME <400 gallons

EST. DRAINABLE INTERSTITIAL LIQUID VOLUME <500 gallons

TEMPERATURE: 76

IS HEAT LOAD A PROBLEM? YES____ NO X UNKNOWN____

IS THERE A POTENTIAL DOME LOAD PROBLEM: YES____ NO X

PHOTOGRAPH EVALUATION:
Photo series # 093996 (12-16-80) The photographs show that the water surface consists of approximately 10 percent exposed wet solids and 40 percent shallow liquid. The estimated depth of this pool is between 1 and 2 inches. The manual gauge is contacting solids.

COMMENTS:
The tank contains approximately 3000 gallons of sludge.

Prepared By: [signature] 9-3-82

Reviewed By: [signature] 9-3-82

Single-Shell Tank Interim Stabilization Evaluation Form

TANK: **241-S-101**

(Jet Pumping only) Reason for stopping jet pumping:

[x] Meets 0.05 gpm criteria, Date of Shutdown 10/08/03

[ ] Major equipment failure, Date of Shutdown _____

Tank Waste Surface Level Condition and Comments: SEE DESCRIPTION PAGE 2

Evaluation: (See continuation page for calculations and additional comments)

Photo/video review completed - Date of most recent photo/video 03/02/04

[x] Tank history, temperature profile and intrusion reviews completed and no anomalies identified

Starting Liquid Level 162.1" Method ENRAF Date 07/27/02
Final liquid level 112.6" Method Dip Tubes Date 04/05/04
Total Net Pumped Volume 68.2 Kgal
Capillary Height Used in Calculation 0"
Final Solids Volume 351.8 Kgal
Final Average flow rate 0.017 gpm
Porosity 0.103 (calculated)
Supernatant Volume Remaining 59 gal
Drainable Interstitial Liquid 45.0 Kgal
Drainable Liquid Remaining 45.1 Kgal
Pumpable Liquid Remaining 40.0 Kgal

[ ] Justification letter attached (Interim Stabilization System Engineer):

Disposition of Tank:

[x] Tank Interim Stabilized
[ ] Tank Not Interim Stabilized; Re-start Pumping

Evaluation prepared by Retrieval/Closure System Engineer: SL Swaney Date 4/21/2004

Closure Projects Engineering Support Process Engineer: WB Barton Date 4/21/04

APPROVED BY:

Manager, Retrieval/Closure System Engineering MJ Sutey Date 4/21/04

Manager, Closure Projects Engineering Support KJ Hull Date 4/21/04

Single-Shell Tank Interim Stabilization Evaluation Form (cont.)

EVALUATION CALCULATIONS AND COMMENTS:

TANK: **241-S-101**

OBJECTIVE/PURPOSE:

This Single-Shell Tank Interim Stabilization Evaluation provides the data and supporting calculations involved in declaring single-shell waste storage tank 241-S-101 interim stabilized. The criteria to declare 100-series jet-pumped single-shell waste storage tanks to be interim stabilized are: 1) the tank contains less than 50,000 gallons of drainable interstitial liquid (DIL), 2) the tank contains less than 5,000 gallons of supernatant, and 3) the measured maximum pump-out or in-flow rate is less than 0.05 gallons per minute. In the event of major equipment failure, Criteria 3 may be waived with a letter of justification and management approval.

ANALYSIS METHOD:

The analysis method used for this evaluation relied upon the criteria and equations established in HNF-2978, Rev. 5, *Updated Pumpable Liquid Volume Estimates and Jet Pump Durations for Interim Stabilization of Remaining Single-Shell Tanks.* Calculations presented will utilize the Dip Tube basis method presented in RPP-5556, Rev. 0, *Updated Drainable Interstitial Liquid Volume Estimates for 119 Single-Shell Tanks Declared Stabilized.* For dip tube basis calculations, this method assumes a zero inch height of capillary liquid retention in the solid waste matrix, as the dip tubes are not in direct contact with the solid waste volume of the tank. See the **Calculations** section for equation definitions.

This evaluation follows the applicable guidelines of TFC-ENG-DESIGN-C-10, Rev. A-4, *Engineering Calculations* and the technical basis and formatting requirements of TFC-ENG-CHEM-P-15, Rev. A-1 *Single-Shell Tank Interim Stabilization Evaluation.* When complete, this evaluation will be formally released as part of a direct revision to HNF-SD-RE-TI-178, *Single-Shell Tank Leak Stabilization Record.*

TANK WASTE DESCRIPTION:

The following description was obtained by in-tank video taken 03/02/04. Saltwell pumping yielded 68.2 Kgal of net waste from 241-S-101, while using 4.9 Kgal of water for pump flushes and 55.9 Kgal of water for dilution. The waste of 241-S-101 appears as a flat, dark, sludge type waste with an irregular surface with white clumps of a saltcake type material. Also visible are cracks in the waste surface that were created as the waste was dried out by saltwell pumping. There appears to be a slight depression in the center of the tank as evidenced by a shallow pool around the saltwell screen. The waste surface is dry except for this small pool. This surface of this pool (~ 5.0 foot diameter) is the interstitial liquid level (ILL) and is contained within a slight depression (~ 15 foot diameter) in the waste surface. The ILL is visible during the video examination due to the camera positioning near the waste feature. The ENRAF plummet was not visible during video observation. It is located 28.5 feet from the tank wall (9 feet from the tank center) and reads 137.5 inches. The waste surface at the tank side walls shows about three and a half tank wall rings exposed. This is generally consistent with the waste level measured at the ENRAF.

Currently, liquid observation well (LOW) readings indicate an ILL of 123.7 inches. ENRAF readings indicate the surface level is 137.4 inches. Dip tube readings are obtained weekly by work package WS-04-0568. The current (04/05/04) dip tube level adjusted for a dip tube offset of 7.25 inches and assuming a zero inch capillary height, is 112.6 inches. The difference between ILL and dip tube levels is within the assumed range of capillary heights (6-24 inches). All reported levels are based on the center of the tank's dished bottom. Calculations do not take into account any retained gas within the waste.

Evaluation Prepared by SLSwaney SLS Date 4/21/2004

Evaluation Checked by WB Barton WBB Date 4/21/04

Single-Shell Tank Interim Stabilization Evaluation Form (cont.)

EVALUATION CALCULATIONS AND COMMENTS:

TANK: **241-S-101**

INPUT DATA & ASSUMPTIONS

Initial Liquid Level at Start of Pumping (ENRAF – 07/27/02) = 162.06 inches ~ 162.1 inches

Final ENRAF Reading (04/16/04) = 137.43 inches ~ 137.4 inches

Final Liquid Observation Well (LOW) Reading (04/12/04) = 123.66 inches ~ 123.7 inches

Final Dip Tube Reading from WS-04-0568 (04/05/04) = 105.32 inches ~ 105.3 inches

Dip Tube Offset (Distance of lowest dip tube leg from tank bottom) = 7.25 inches

Final Adjusted Dip Tube Level = 105.32 inches + 7.25 inches = 112.57 inches ~ 112.6 inches

Divergence point = LOW & ENRAF Levels vs. time diverge (supernatant liquid is exhausted)

Divergence point = (based on LOW Level from 08/25/03) = 126.00 inches ~ 126.0 inches

Net Waste Pumped since divergence (08/25/03 through 10/08/03 from \\AP012\DPU) = 652 gallons

Net Waste Pumped (data through 10/08/03 on \\AP012\DPU) = 68,222gal = 68.2 Kgallons

Capillary Height (based on Dip Tube bases) = 0 inches **

Sludge Volume = 235,000 gallons ****

Height of Sludge Layer (235 Kgal) above bottom ~ 94.6 inches ***

Tank Dished Bottom Volume (Lower 12" Height) = 13,378 gallons ***

Unpumpable Liquid Height Constant = 18 inches *

Assumed Sludge Porosity = 17% *

For 100-series (75' dia.) tanks (500, 750, and 1000K gallon SSTs), 1 inch equals 2750 gallons when above the dish bottom. *

EQUATIONS

D.I.L. = Drainable Interstitial Liquid *
= {(Final Adj. Dip Tube Level - Capillary Ht. – Sludge height)* 2750 gal/in} * porosity + (Sludge Vol.) * assumed Sludge porosity

D.L.R. = Drainable Liquid Remaining *
= D.I.L. + supernatant volume

P.L.R. = Pumpable Liquid Remaining *
= D.L.R. – [((Unpump. Ht – 12.0") * 2750 gal/in + Dish Vol.) * assumed sludge porosity]

*Reference HNF-2978, Rev. 5
**Reference HNF-5556, Rev. 0
***Reference HNF-13019, Rev. 0
****Twins Database query 04/20/04

Evaluation Prepared by SL Swaney SL S Date 4/21/2004

Evaluation Checked by W.B. Barton WBB Date 4/21/04

Single-Shell Tank Interim Stabilization Evaluation Form (cont.)

EVALUATION CALCULATIONS AND COMMENTS:

TANK: **241-S-101**

RESULTS/CALCULATIONS

POROSITY:

Drainable Porosity (Saltcake) = Net waste pumped (since 08/25/03)/ [(Divergence point – final LOW level)*2750 gal/in]

= (652 gallons) / [(126.0" – 123.7") * 2750 gal/in] * 100% = 10.3%

DIP TUBE BASIS:

DIL = {(112.6 - 0 - 94.6) * 2750 gal/in} * 0.103 + (235,000) * 0.17

= [49,500 gal * 0.103 + 235,000 * 0.17] = 5,099 + 39,950 = 45,049 gallons (45.0 Kgal)

DLR = DIL + Supernatant = 45,049 gallons + 59 gallons = 45,108 gallons (45.1 Kgal)

Note: Supernatant volume calculated under SOLIDS VOLUME section (below).

PLR = DLR – [((18" – 12") * 2750 gal/in + 13,378 gal) * 0.17]

= 45,108 gal – [(16,500 gal + 13,378 gal) * 0.17] = 45,108 – [29,878 * 0.17]

= 45,108 gal – 5,079 gal = 40,029 gal = (40.0 Kgal)

SOLIDS VOLUME:

The following description was obtained by review of the in-tank video taken 03/02/04. All estimates regarding waste dimensions were obtained by comparison with known dimensions of installed in-tank equipment and drawing H-2-1783, Sht. 1, Rev. 3. The ENRAF level during the video was 137.5 inches. The waste appears to be fairly level over the full diameter of the tank, except for a slight depression in the region of the saltwell screen. The depression forms a void space, assumed to be a right circular cone with a diameter of 15 feet and an overall depth of 30.9 inches. The bottom 6 inches is filled with supernatant forming a pool approximately 5 feet in diameter. For the purposes of this evaluation, the ILL (dip tube level) is assumed to be the top of the visible liquid pool. This volume combined with the saltwell screen volume will be considered the total supernatant volume for the tank.

Per HNF-2978, Rev. 5 and Best Basis Inventory (BBI) located in the TWINS database; the sludge volume of 241-S-101 is 235 Kgal. For reporting purposes, the total quantity of solids in the tank will be calculated and the sludge volume will be subtracted from this total. This volume difference will then be the reported quantity of saltcake in 241-S-101. For this calculation the saltcake and sludge solids volumes include the interstitial liquid but do not include any supernatant liquid.

For the purpose of this evaluation, the solids volume will include an evaluation of the upper saltcake surface (subtracting the cone shaped depression) and the sludge (lower and dish regions) volume. See SOLIDS CALCULATION FIGURE (next page). These volumes are then added together to obtain the total volume as follows:

Evaluation Prepared by SL Sweeney SL Sweeney Date 4/21/2K4

Evaluation Checked by WB Barton WB Barton Date 4/21/04

Single-Shell Tank Interim Stabilization Evaluation Form (cont.)

EVALUATION CALCULATIONS AND COMMENTS:

TANK: **241-S-101**

RESULTS/CALCULATIONS (cont.)

SOLIDS VOLUME (cont):

SOLIDS CALCULATION FIGURE (not to scale)

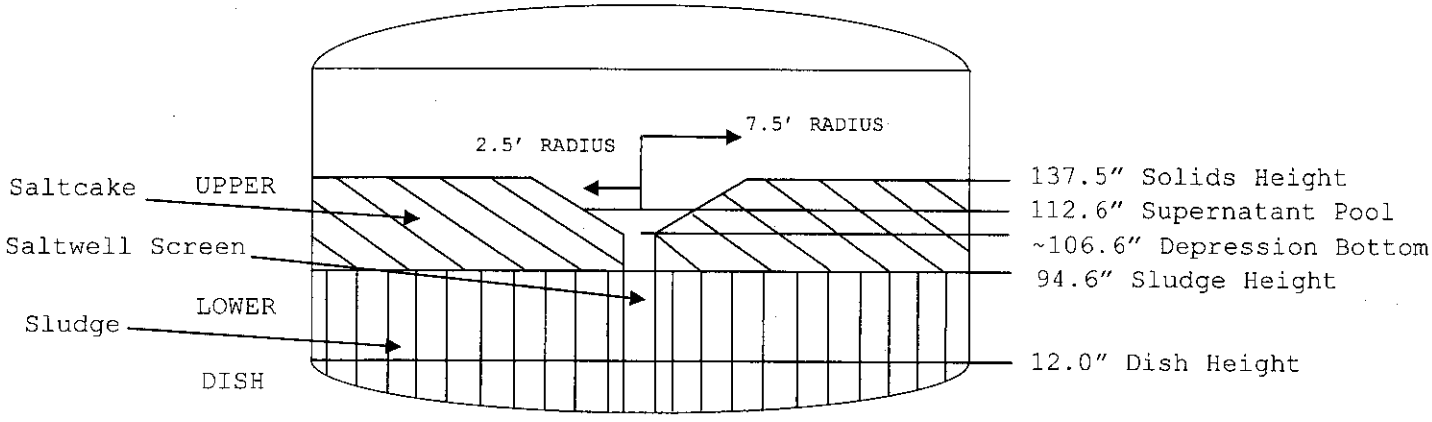

Volume = [Vol. (137.5"–94.6")* 2750 gal/in] +Vol. of 94.6" (Sludge Volume)]– Vol. (right circ. cone)

(Where right circular cone vol. is = (pi * H/3 * $r^{\wedge 2}$) * 7.481 gal/$ft^{\wedge 3}$

= 117,975 + 235,000 – (pi/3) (7.5 ft.) $^{\wedge 2}$ * (30.9)/12 ft. * 7.481 gal/$ft^{\wedge 3}$

= 352,975 gallons – 1,135 gallons = 351,840 gallons

Volume (Supernatant) = Vol. pool (right circ. cone) + Vol. 10 inch saltwell screen (right circ. cyl.)

(Where right circular cylinder vol. is = (pi * H * $r^{\wedge 2}$) * 7.481 gal/$ft^{\wedge 3}$

Volume (Supernatant) = [pi * [(0.5 ft)/3 *(2.5 ft)$^{\wedge 2}$ +(106.6 - 7.25)/12 ft * (0.42 ft)$^{\wedge 2}$)]* 7.481 gal/ $ft^{\wedge 3}$]

= pi * [1.04 + 1.46] * 7.481 = 24.5 + 34.3 = 58.8 gallons = <u>59 gal</u>

Volume (Tot) gallons = 351,840 + 59 = 351,899 gallons = <u>351.9 Kgal</u>

Solids Volume Remaining = Volume (Tot) – Supernatant Volume

= 351,899 gallons - 59 gallons = 351,840 gallons = <u>351.8 Kgal</u>

Saltcake Volume remaining = Solids Volume Remaining – Sludge Volume

= 351,840 gallons – 235,000 gallons = 116,840 gallons = <u>116.8 Kgal</u>

Evaluation Prepared by SL Swaney SL S Date 4/21/2K4

Evaluation Checked by WB Barton WB Date 4/21/04

Single-Shell Tank Interim Stabilization Evaluation Form (cont.)

EVALUATION CALCULATIONS AND COMMENTS:

TANK: **241-S-101**

RESULTS/CALCULATIONS (cont.)

FLOW DATA:

The final pump flow rate is found by data obtained from operating procedure TO-420-101, Rev. B-3 from 2033 October 6, 2003 to 0822 October 8, 2003 that show a total of 119.6 gallons of waste was pumped, including an 88 gallon system flush, over the time period of 1879 minutes (31 hours, 19 minutes). These data were taken over the time span comprising the last stable operating shift of the saltwell pump prior to shutdown. The following equation shows the final pumping rate:

Pump Rate = [(119.6 – 88 gallons) / 1879 minutes] = (0.017 gpm)

SOFTWARE: None.

REFERENCES:

TO-410-101, Rev. A-1 through B-3, *Perform 241-S-101 Saltwell Pumping.*

H-2-1783, Sht. 1, Rev. 3, *75 ft. Composite Storage Tanks Sections.*

HNF-2978, Rev. 5, *Updated Pumpable Liquid Volume Estimates and Jet Pump Durations for Interim Stabilization of Remaining Single-Shell Tanks.*

RPP-5556, Rev. 0, *Updated Drainable Interstitial Liquid Volume Estimates for 119 Single-Shell Tanks Declared Stabilized*

TFC-ENG-DESIGN-C-10, REV A-4, *Engineering Calculations.*

TFC-ENG-CHEM-P-15, Rev. A-1, *Single-Shell Tank Interim Stabilization Evaluation* procedure.

HNF-SD-RE-TI-178, Rev. 8, *Single-Shell Tank Leak Stabilization Record.*

WS-04-0568, *241-G Weight Factor and Specific Gravity Readings*

Tank Waste Information System (TWINS) 2004, *queried April 20*, 2004, [posted Tank Integrity Reports], Hanford intranet at http://twinswhse.pnl.gov/

Pumpchrts_PE.xls, Excel log of saltwell pumping history from server \\ap012\dpu\pumpchartsPE.

CONCLUSIONS/RECOMMENDATIONS:

241-S-101 has met the criteria for declaration of interim stabilization. See Page 1 for summary and final tank disposition and approvals.

ATTACHMENTS:

All record attachments, raw data, and calculations for this evaluation, as well as other information may be found in the tank history file maintained by Interim Stabilization Engineering, per the requirements TFC-ENG-CHEM-P-15, section 4.2.19.

Evaluation Prepared by S L Swaney SL S Date 4/21/2004

Evaluation Checked by W B Barton WBB Date 4/21/04

Single-Shell Tank Interim Stabilization Evaluation Form.

TANK: **241-S-103**

(Jet Pumping only) Reason for stopping jet pumping:

[x] Meets 0.05 gpm criteria, Date of Shutdown _____01/06/00_____

[ ] Major equipment failure, Date of Shutdown _____

Tank Waste Surface Level Condition and Comments: _____ SEE DESCRIPTION PAGE 2 _____

Evaluation: (See continuation page for calculations and additional comments)

Photo/video review completed - Date of most recent photo/video _____01/27/00_____

[x] Tank history, temperature profile and intrusion reviews completed and no anomalies identified

Starting Liquid Level ___ 104.8"_____ Method ____ LOW _____ Date ___ 06/01/99_____
Final liquid level _____68.6" _____ Method ___Dip Tubes_____ Date ___02/29/00_____
Total Net Pumped Volume ____23.8 Kgal_____
Capillary Height Used in Calculation ___0"____
Final Solids Volume _____191.4 Kgal_____
Final Average Flow rate _____0.036 gpm_____
Calculated Porosity _____ N/A _____
Supernatant Volume Remaining ___1.0 Kgal____
Drainable Interstitial Liquid _____44.8 Kgal_____
Drainable Liquid Remaining _____45.8 Kgal____
Pumpable Liquid Remaining ____ 38.5 Kgal_____

[ ] Justification letter attached (Interim Stabilization Cognizant Engineer)

Disposition of Tank:

[x] Tank Interim Stabilized
[ ] Tank Not Interim Stabilized; Re-start Pumping

Evaluation prepared by SST Cognizant Engineer: JM Doeler Date 3/23/00

Evaluation checked by Process Engineer: V.C. Boyles Date 3/23/2000

Interim Stabilization Cognizant Engineer: [signature] Date 3/23/2000

APPROVED BY:

Manager, Interim Stabilization Engineering [signature] Date 3/23/2000

Manager, Process Engineering [signature] for C. DeFigh-Price Date 3/23/00

Manager, SST Engineering RE Larson Date 3/24/00

EVALUATION CALCULATIONS AND COMMENTS:

TANK: **241-S-103**

The surface of 241-S-103 is a rough, black and brown colored waste with yellow patches of saltcake visible throughout. The surface appears to be damp, but not saturated, and shows irregular cracking typically seen with surfaces beginning to dry out. A pool of supernatant liquid is visible from video observations. The pool is estimated to be 10 feet in diameter, 5 feet deep, and in the shape of a right circular cone for the purposes of volume calculation. The waste surface appears to be flat across the entire tank with no visible slope to the waste. The ENRAF reports a level of 93.7 inches and is visible in a small depression. The ENRAF is installed approximately 9 feet from the tank center. Liquid observation well (LOW) readings indicate an interstitial liquid level (ILL) of 92.0 inches, also located 9 feet from the tank center. This indicates that the interstitial liquid level is approximately 2" below the waste surface level. Dip tube readings are located at the tank center and report an adjusted liquid surface level of 72.6 inches. All levels are based off the centerline of the tank's dished bottom.

For the purposes of this evaluation, the dip tube readings will be used to determine the final quantities of drainable and pumpable liquid in tank 241-S-103. To calculate drainable interstitial liquid (DIL) using dip tube measurements, capillary height may not be subtracted in the equation per RPP-5556, Rev. 0. This is due to there being no waste above the liquid in the saltwell screen to retain liquid through capillary forces.

DATA

LOW Reading (03/08/00) = 91.992 inches ~ 92.0 inches

ENRAF Reading (03/08/00) = 93.725 inches ~ 93.7 inches

Dip Tube Reading (02/29/00) = 68.60 inches + 4 inches (distance off tank bottom)
= 72.60 inches ~ 72.6 inches

Tank Waste Porosity = 25% **

Tank Dished Bottom Volume (Lower 12" Height) = 12,500 gallons **

Supernatant Volume (01/27/00 In-Tank Video Estimate) = 1000 gallons

D.I.L. = Drainable Interstitial Liquid ##
= [((Saturated Solids Ht. – 12") – 0" Capillary Ht.)* 2750 gal/in + 12,500 gal]* porosity

D.L.R. = Drainable Liquid Remaining **
= D.I.L. + supernatant liquid

P.L.R. = Pumpable Liquid Remaining **
= D.I.L. + supernatant – [(18" Unpumpable Ht. - 12")* 2750 gal/in + 12,500 gals]* porosity

** Reference HNF-2978, Rev. 1
Reference RPP-5556, Rev. 0

Evaluation Prepared by JM Daler LS Date 3/23/00

Evaluation Checked by VC Boyles Date 3/23/2000

Single-Shell Tank Interim Stabilization Evaluation Form. (cont.)

EVALUATION CALCULATIONS AND COMMENTS:

TANK: **241-S-103**

POROSITY:

Tank Waste Porosity could not be determined from pumping data due to insufficient LOW draw down levels vs. net pumping quantities. Therefore, a porosity of 25% will be used per HNF-2978.

DIP TUBE BASIS:

DIL = [(72.6" – 12") * 2750 gal/in + 12,500 gallons] * 0.25

= [166650 + 12,500] * 0.25 = 44,788 gallons (44.8 Kgal)

DLR = DIL + Supernatant = 44,788 gallons + 1000 gallons = 45,788 gallons (45.8 Kgal)

PLR = DIL + Supernatant - [(18" – 12") * 2750 gal/in + 12,500 gallons]* 0.25

= 44788 + 1000 – 7250 = 38,538 gallons (38.5 Kgal)

SOLIDS VOLUME:

The waste surface is consistent and level across the entire span of the tank. For the purposes of this calculation, the ENRAF level will be used to determine the total amount of remaining solids. The total solids volume of tank 241-S-103 is then found by the following:

Volume (Tot) = Volume ENRAF (93.7" –12") * 2750 gal/in + 12,500 gallons (Volume Dish)

Volume (Tot) = 224,675 gals + 12,500 gals = 237,175 gallons = 237.2 Kgal

Volume Solids = Volume (Tot) – D.L.R. = 237, 175 – 45,788 = 191,387 gals = 191.4 Kgal

FLOW DATA:

Saltwell pumping data from December 1st to December 31st,1999 netted (total gallons pumped minus flush & dilution water) 978 gallons of waste from 241-S-103. During the month of December, the saltwell pump operated for a total of 456 hours, or 61% efficiency. The following equation shows the final pump out rate:

Pump Rate = [(978 gallons/456 hours) * (1hr/60 minutes)] = (0.036 gpm)

Evaluation Prepared by JM Daeler SLS Date 3/23/2000

Evaluation Checked by V C Boyles Date 3/28/2000

Tank: 104-S

Evaluation (see continuation page for calculations and additional comments):

☒ Photograph review completed - Date of most recent photographs 12/12/84

☒ Tank History review completed

☒ Tank temperature profile review completed prior to 2/84

Surface Description: The surface consists of a smooth, light gray, damp sludge with a small supernate pool (< 500 gallons) around the saltwell screens. The supernate pool is mustard brown in color. Date 12/17/84

Solids Level 114.25 in Date 12/14/84 Method Manual FIC

Liquid Level 114.25 in Date 12/14/84 Method Manual FIC

Solids Volume 294,000 gallons

Estimated Drainable Liquid Volume 29,000 gallons

Average Maximum Tank Temperature, past 6 months Not Available

Estimated Supernatant Volume 500 gallons

☐ Cost/Benefit Analysis attached

Evaluation Performed by _____ Date _____ Checked by _____ Date _____

Disposition of Tank:

☒ Tank Interim Stabilized at 29,000 gallons of drainable liquid

☐ Tank not Interim Stabilized; stabilization activities resumed

Approved by: Manager, TF&EPE [signature] Date 12/17/84

Manager, TFS&O [signature] Date 12/19/84

Program Manager [signature] Date 12-20-84

DISTRIBUTION: TF&EPE Tank File, Tank Farm Surveillance Analysis, Approval Signatures

EVALUATION CALCULATIONS AND COMMENTS

Tank: 104-S

Page 2 of 2

Supernate Volume: 500 gallons

Solids Volume: (114.25 - 12) 2750 + 12500 = 293688 gallons => 294,000

Drainable Interstitial Liquid: (294,000 - 66000)(.125) = 28500 gallons

Total Drainable Liquid Volume: 28500 gallons + 500 gallons = 29,000 gallons

Total Pumpable: (28500 - 6500) + 500 = 22,500 gallons

Calculations made by: J. Stan Hill

Checked by: Terry L Vail

INTERIM STABILIZATION EVALUATION - JET PUMPED TANKS

Tank 241-S-105

Reason Jet Pumping Halted:
Meets 0.05 gpm Criteria, date of shutdown NOT AVAIL
Major Failure of Jet Pump, date of shutdown 10/78

Additional Comments:

Evaluation: (see Continuation Sheet for calculations and additional comment)

Starting Liquid Level 173.3 Date 8/78
Supernatant Volume 0 Date 8/78

Final Liquid Level measured after equilibration of Interstitial Liquid:

Dip Tubes Date
LOW 50" (Nautron) Date 4/14/88
Manual Date

Total Net Jet Pumped Production 114,300

Calculated Solid Characteristics:

Porosity 33.7%
Permeability/Viscosity (K/N) NOT APPLICABLE
Capillary Height 12" (ASSUMED)

Estimated Drainable Liquid Remaining 35K
Final Average Flowrate NOT AVAILABLE Date
Evaluation performed by VC Boyles Date 7/20/88

Disposition of Tank

Tank Interim Stabilized at 35 thousand gallons of Drainable Liquid
18 thousand gallons of Pumpable Liquid.

Tank not Interim Stabilized; Jet Pumping restarted

Approved by: Manager, TF&EPC [signature] Date 9/26/88
Manager, TFS&O K J Baumhardt Date 9/26/88
Program Manager DJ Washenfelder Date 9/26/88

DISTRIBUTION: TF&EPC Tank File, HS&E Surveillance Analysis, Approval Signatures

JET PUMPED TANKS

Evaluation Calculations and Comment

Tank: 241-S-105

$$\text{Porosity} = \frac{\text{Total Jet}}{(\text{Starting Liquid Level} - \text{Final Liquid Level})(2750)} = \frac{114,300}{(193.3-50)(2750)} = .337 \text{ or } 33.7\%$$

Drainable interstitial remaining = (50 - 12)(2750)(.337) = 35K Gallons

Pumpable interstitial liquid = Drainable interstitial liquid - (18)(2750)(.337).

= 35K - 17K = 18K Gallons

As a double check and worse case situation, using the conservative 45% porosity factor for saltcake type waste, drainable interstitial liquid remaining follows:

Drainable interstitial liquid remaining = (50-12)(2750)(.45) = 47K Gallons.

Tank 241-S-105 was jet pumped in 1978 and pumping was halted because of a malfunction of the pump. Based on the solids level prior to pumping, the interstitial liquid volume was estimated at approximately 210,000 gallons using an assumed 45% salt cake porosity. The remaining interstitial liquid volume of 100,000 gallons was determined by subtracting the total pumped volume from the original estimate. The porosity of the solids was never calculated. Pumping of 105-S was not restarted because of funding restraints. A liquid observation well (LOW) was installed during 1984 and the readings show the actual liquid level at 50 inches. By using the pumping data taken in 1978 a porosity factor of 33.7% was calculated and from this an estimated 35,000 gallons of drainable interstitial liquid remain. As a worse case situation, using the conservative 45% porosity factor for salt cake type wastes, the calculations show 47,000 gallons of drainable interstitial liquid remaining which still meets the 50,000 gallon stabilization criterion. Interim stabilization of this tank at this time is based on the ability to determine the interstitial liquid level of the tank with the use of the LOW's and on the 50,000 gallon interstitial liquid criteria.

Calculations made by: M. Coyle

Checked by: Joel A. Tuck

Single-Shell Tank Interim Stabilization Evaluation Form.

TANK: **241-S-106**

(Jet Pumping only) Reason for stopping jet pumping:

[x] Meets 0.05 gpm criteria, Date of Shutdown _____01/06/00_____

[ ] Major equipment failure, Date of Shutdown _____

Tank Waste Surface Level Condition and Comments: _____ SEE DESCRIPTION PAGE 2 _____

Evaluation: (See continuation page for calculations and additional comments)

Photo/video review completed - Date of most recent photo/video _____12/17/99_____

[x] Tank history, temperature profile and intrusion reviews completed and no anomalies identified

Starting Liquid Level ___ 183.1"_____ Method ____ENRAF_____ Date ___04/14/99_____
Final liquid level _____ 42.1"_____ Method _____LOW_____ Date ___01/30/01_____
Total Net Pumped Volume __106.6 Kgal__(Does not include 97 Kgal waste pumped in previous campaigns)
Capillary Height Used in Calculation ___0"____
Final Solids Volume _____429.2 Kgal_____
Final Average Flow rate _____0.025 gpm_____
Calculated Porosity _____0.274_____
Supernatant Volume Remaining _____ 0 gal ____
Drainable Interstitial Liquid _____26.1 Kgal_____
Drainable Liquid Remaining _____26.1 Kgal____
Pumpable Liquid Remaining _____ 18.2 Kgal_____

[ ] Justification letter attached (Interim Stabilization Cognizant Engineer)

Disposition of Tank:

[x] Tank Interim Stabilized
[ ] Tank Not Interim Stabilized; Re-start Pumping

Evaluation prepared by SST Cognizant Engineer: _____ Date 2/1/01

Evaluation checked by Process Engineer: _____ Date 2/1/01

Interim Stabilization Cognizant Engineer: _____ Date 2/1/2K1

APPROVED BY:

Manager, Interim Stabilization Engineering _____ Date 2/1/01

Manager, Process Engineering _____ Date 2/1/01

Manager, SST Engineering W. E. Bryan Date 2/1/01

Single-Shell Tank Interim Stabilization Evaluation Form. (cont.)

EVALUATION CALCULATIONS AND COMMENTS:

TANK: **241-S-106**

The surface of 241-S-106 is a rough, brown and yellow colored saltcake waste with an irregular surface of mounds and saltcake crystals that were created as the surface was dried out. The waste surface appears to be dry and shows no standing water within the tank. There is no evidence of supernatant liquid from video observations taken on 12/17/99. The waste surface slopes gradually from the tank sidewall to a depression in the center of the tank. This depression is estimated to be 9 feet in diameter and 3 feet deep based on the visible portion of the saltwell screen mesh. The depression surrounds both of the saltwell screens, but does not extend around the temperature probe and ENRAF devices. The ENRAF shows the surface of the waste near the depression edge to be 161.5 inches. Calculations show the waste surface at the saltwell screen to be approximately 128 inches. The ENRAF reading at the start of pumping was 183.1 inches. The waste surface slopes gradually from one side of the tank to the opposite sidewall. Liquid observation well (LOW) readings indicate an interstitial liquid level (ILL) of 42.1 inches. Dip tube readings are located at the tank center and report an adjusted liquid surface level of 31.0 inches. This level is based on elevation & fabrication drawings that show the dip tubes installed 8 inches above the tank bottom. All levels are based off the centerline of the tank's dished bottom. Calculations do not take into account any retained gas within the waste.

For the purposes of this evaluation, the LOW readings will be used in lieu of dip tube readings. This change is needed because the equipment required for obtaining dip tube levels in the saltwell screen was removed from tank 241-S-106 in August 2000 for use at another tank. However, for this evaluation of a saltcake tank, a capillary height of 0" will still be used per HNF-5556, Rev. 0, section 3.2.2.

DATA

LOW Reading (01/30/01) = 42.084 inches ~ 42.1 inches

ENRAF Reading (01/30/01) = 161.525 inches ~ 161.5 inches

Dip Tube Reading (08/16/00) = 22.92 inches + 8 inches (distance off tank bottom)
= 30.92 inches ~ 31.0 inches

Initial Liquid Level from 4/20/99 (ENRAF and LOW divergence point) = 179.1 inches

Net Waste Pumped (since 04/20/99) = 103,400 gallons (per TO-420-100 data sheets)

Porosity = Net Waste Pumped / [(Init. liquid level – final liquid level) *2750 gal/in]

Tank Dished Bottom Volume (Lower 12" Height) = 12,500 gallons **

Supernatant Volume (12/17/99 In-Tank Video Estimate) = 0 gallons

D.I.L. = Drainable Interstitial Liquid ##
= {[(Saturated Solids Ht. – 12") – (0" Capillary Ht.)]* 2750 gal/in + 12,500 gal }* porosity

D.L.R. = Drainable Liquid Remaining **
= D.I.L. + supernatant liquid

P.L.R. = Pumpable Liquid Remaining **
= D.L.R. – [(18" Unpumpable Ht. - 12")* 2750 gal/in + 12,500 gallons]* porosity

**Reference HNF-2978, Rev. 2
##Reference RPP-5556, Rev. 0

Evaluation Prepared by JM Doeler SLS Date 2/1/01

Evaluation Checked by U.C. Boyles Date 2/1/01

Single-Shell Tank Interim Stabilization Evaluation Form. (cont.)

EVALUATION CALCULATIONS AND COMMENTS:

TANK: **241-S-106**

POROSITY:

Porosity = Net waste pumped / [(Initial liquid level – final liquid level) *2750 gal/in]

= 103,400 gallons / [(179.1" – 42.1") * 2750 gal/in] = 27.4%

LOW BASIS:

DIL = [(42.1" – 12") * 2750 gal/in + 12,500 gallons] * 0.274

= [82,775 + 12,500] * 0.274 = 26,105 gallons (26.1 Kgal)

DLR = DIL + Supernatant = 26,105 gallons + 0 gallons = 26,105 gallons (26.1 Kgal)

PLR = DLR – [(18" – 12") * 2750 gal/in + 12,500 gallons]* 0.274

= 26,105 – 7946 = 18,159 gallons (18.2 Kgal)

SOLIDS VOLUME:

The upper waste surface level slopes 2.4 feet over 37.5 feet from the tank sidewall (~183") to a projected center (~154.7") of a large depression (assumed to be a right circular cone). A second depression, centered upon the first depression, (assumed to be a right circular cone) has formed around the saltwell screens causing the waste surface slope to increase 2.8 feet over 9 feet from the ENRAF device (161.5") to the central saltwell screen (~128"). The waste volumes of the upper and lower sloped areas and the volumes below the depressions were calculated to determine the total waste volume of the tank. The volume of the upper sloped surface was calculated by finding the volume of the void space, created by the cone, and subtracting it from the surface volume. There is a volume of overlap that must be accounted for in the total. This overlap is between the upper and lower solids volume estimates. The volume of overlap between the upper and lower solids estimates is subtracted from the total to correct for adding the same volume in both sloped areas:

Vol (upper slope) = [Volume of 183" – 154.7") * 2750 gal/in] –Volume of cone

= (28.3" *2750 gal/in) –[(pi/3) *(37.5')^2 *(2.36')] *7.5 gal/ft^3

= 77,825 gallons – 26,065 gallons = 51,760 gallons

Vol (lower slope) = [Volume of (161.5" – 128")* 2750 gal/in] – Volume of cone – Volume solids overlap

= (33.5" * 2750 gal/in) – (pi/3) * (9')^2 * (2.8') * 7.5 gal/ft^3 – 18,338 gals

= 92,125 gallons – 1782 gallons – 18,338 gallons = 72,005 gallons

(where) Vol solids overlap =((161.5" –154.7") *2750 gal/in) –[(pi/3) *(9')^2 *(.57')*7.5 gal/ft^3] = 18,338 gals

Evaluation Prepared by JM Doeler SZS Date 2/1/01

Evaluation Checked by VC Boyles Date 2/1/01

Single-Shell Tank Interim Stabilization Evaluation Form. (cont.)

EVALUATION CALCULATIONS AND COMMENTS:

TANK: **241-S-106**

SOLIDS VOLUME (cont.):

The total solids volume of tank 241-S-106 is then found by the following:

Volume (Tot) = Vol. (upper slope) + Vol. (lower slope) + Vol. (128" to 12") + Vol. dish bottom (lower 12")

Volume (Tot) = 51,800 gals + 72,000 gals + 319,000 gals + 12,500 gals = 455,300 gallons

Solids Volume remaining = Volume (tot) – Drainable Liquid Remaining (DLR)

= 455,300 gals – 26,100 gals = 429,200 = 429.2 Kgal

FLOW DATA:

Examination of the trend of monthly pumping rates of 241-S-106 over the life of the pumping campaign reveals the following:

Month	Hours	Mode	Net Waste (gal)	Pump Rate (gpm)
4/99	180	Bypass	26, 387	2.44
5/99	549	Bypass	45,464	1.38
6/99	321	Auto	10,376	0.54
7/99	194	Auto	4,500	0.39
8/99	396	Auto	5,947	0.25
9/99	430	Auto	5,421	0.21
10/99	532	Auto	3,550	0.11
11/99	491	Auto	2,955	0.10
12/99	395	Auto	1,782	0.075

In determining the final flow rate, saltwell pumping data from December 29th to January 4th was used. The numbers show a net of 246 gallons of waste was pumped from 241-S-106. This number excludes 111 gallons of flush water usage. During this time period, the saltwell pump operated for a total of 161 hours, or 96% efficiency. The following equation shows the final pump out rate:

Pump Rate = [(246 gallons/161 hours) * (1hr/60 minutes)] = (0.025 gpm)

The in-flow rate of the saltwell screen was also analyzed. The refill of the saltwell screen, as reported by the saltwell system DTAM, began at a weight factor transmitter (WFT) level of 14.5 inches (10.4 inches adjusted for specific gravity) @ 0428 on January 5th. After one hour, the WFT level reached 18.5 inches (13.2 inches adjusted for specific gravity). This shows a 2.8 inch rise inside the saltwell screen over 60 minutes. A typical 10-inch diameter saltwell screen will hold 0.34 gallons/inch. The following equation calculates the final in-flow rate:

In-Flow Rate = [((13.2 inches – 10.4 inches) * 0.34 gallons/inch)/60 minutes]

= 0.952 gallons/60 minutes = (0.016 gpm)

Evaluation Prepared by JN Daeler SJS Date 2/1/01

Evaluation Checked by VC Boyles Date 2/1/01

Single-Shell Tank Interim Stabilization Evaluation Form

TANK: **241-S-107**

(Jet Pumping only) Reason for stopping jet pumping:

[ ] Meets 0.05 gpm criteria, Date of Shutdown _____

[x] Major equipment failure, Date of Shutdown _____08/20/03_____

Tank Waste Surface Level Condition and Comments: _____ SEE DESCRIPTION PAGE 2 _____

Evaluation: (See continuation page for calculations and additional comments)

Photo/video review completed - Date of most recent photo/video _____12/10/03_____

[x] Tank history, temperature profile and intrusion reviews completed and no anomalies identified

Starting Liquid Level ___ 149.4" _____ Method _____ENRAF_____ Date ___03/04/02___
Final liquid level _____ 97.6" _____ Method _____Dip Tubes_____ Date ___01/21/04___
Total Net Pumped Volume ____81.9 Kgal____
Capillary Height Used in Calculation ___0"____
Final Solids Volume _____358.2 Kgal_____
Final Average flow rate _____0.21 gpm____
Porosity _____0.17__ (assumed) _____
Supernatant Volume Remaining __630.0 gal SL 2/4/04
Drainable Interstitial Liquid _____42.3 Kgal____
Drainable Liquid Remaining ____42.4 Kgal____
Pumpable Liquid Remaining ____37.3 Kgal____

[x] Justification letter attached (Interim Stabilization System Engineer): **7G320-04-MJS.004**

Disposition of Tank:

[x] Tank Interim Stabilized
[ ] Tank Not Interim Stabilized; Re-start Pumping

Evaluation prepared by Retrieval/Closure System Engineer: SL Swaney Date 2/04/2004

Closure Projects Engineering Support Process Engineer: Date 2/4/04

APPROVED BY:

Manager, Retrieval/Closure System Engineering MJ SUTEY Date 2/4/04

Manager, Closure Projects Engineering Support M. R. KOCH Michael R Koch Date 2/4/04

Single-Shell Tank Interim Stabilization Evaluation Form (cont.)

EVALUATION CALCULATIONS AND COMMENTS:

TANK: **241-S-107**

OBJECTIVE/PURPOSE:

This Single-Shell Tank Interim Stabilization Evaluation provides the data and supporting calculations involved in declaring single-shell waste storage tank 241-S-107 interim stabilized. The criteria to declare 100-series jet-pumped single-shell waste storage tanks to be interim stabilized are: 1) the tank contains less than 50,000 gallons of drainable interstitial liquid (DIL), 2) the tank contains less than 5,000 gallons of supernatant, and 3) the measured maximum pump-out or in-flow rate is less than 0.05 gallons per minute. In the event of major equipment failure, Criteria 3 may be waived with a letter of justification and management approval.

ANALYSIS METHOD:

The analysis method used for this evaluation relied upon the criteria and equations established in HNF-2978, Rev. 5, *Updated Pumpable Liquid Volume Estimates and Jet Pump Durations for Interim Stabilization of Remaining Single-Shell Tanks*. Calculations presented will utilize the Dip Tube basis method presented in RPP-5556, Rev. 0, *Updated Drainable Interstitial Liquid Volume Estimates for 119 Single-Shell Tanks Declared Stabilized*. For dip tube basis calculations, this method assumes a zero inch height of capillary liquid retention in the solid waste matrix, as the dip tubes are not in direct contact with the solid waste volume of the tank.. See the **Calculations** section for equation definitions.

This evaluation follows the applicable guidelines of the *Engineering Calculations* procedure, TFC-ENG-DESIGN-C-10, Rev. A-3, and the technical basis and formatting requirements of *Single-Shell Tank Interim Stabilization Evaluation* procedure, TFC-ENG-CHEM-P-15, Rev. A-1. When complete, this evaluation will be formally released as part of a direct revision to HNF-SD-RE-TI-178, *Single-Shell Tank Leak Stabilization Record*.

TANK WASTE DESCRIPTION:

The following description was obtained by in-tank video taken 12/10/03 through the observation port designated riser #6. Saltwell pumping yielded 81,924 gallons of net waste from 241-S-107, while using 5,266 gallons of water for pump flushes and 65,528 gallons of water for dilution. The waste of 241-S-107 appears as a flat, dark, sludge type waste with an irregular surface of visible cracks that were created as the waste was dried out by saltwell pumping. The waste surface appears to be dry except for a small pool surrounding the saltwell screen. This pool (~3 foot diameter) is at the interstitial liquid level (ILL) and is contained within a slight depression (~9 foot diameter) in the waste surface. The ILL is visible during the video examination due to the camera positioning directly above the waste feature. The ENRAF plummet is located 28.5 feet from the tank wall (9 feet from the tank center) and reads 121.4 inches. The waste surface at the tank side walls is approximately 150.5 inches based on three exposed tank wall rings. The waste surface slopes gradually until reaching the saltwell screen.

Currently, liquid observation well (LOW) readings indicate an ILL of 122.4 inches. ENRAF readings indicate the surface level is 121.4 inches. Dip tube readings are obtained weekly by work package WS-03-0299. The current (01/21/04) dip tube level adjusted for the dip tube offset of 8.25 inches and assuming a zero inch capillary height, is 97.6 inches. The difference between ILL and dip tube levels matches the assumed 24 inch capillary height for sludge. All reported levels are based on the centerline of the tank's dished bottom. Calculations do not take into account any retained gas within the waste.

Evaluation Prepared by _____ Date 2/4/2K4

Evaluation Checked by _____ Date 2/4/04

Single-Shell Tank Interim Stabilization Evaluation Form (cont.)

EVALUATION CALCULATIONS AND COMMENTS:

TANK: **241-S-107**

INPUT DATA & ASSUMPTIONS

Initial Liquid Level at Start of Pumping (ENRAF – 03/04/02) = 149.43 inches ~ 149.4 inches

Final ENRAF Reading (01/27/04) = 121.35 inches ~ 121.4 inches

Final Liquid Observation Well (LOW) Reading (01/26/04) = 122.36 inches ~ 122.4 inches

Final Dip Tube Reading from WS-03-0299 (01/21/04) = 89.33 inches ~ 89.3 inches

Dip Tube Offset (Distance of lowest dip tube leg from tank bottom) = 8.25 inches

Final Adjusted Dip Tube Level = 89.33 inches + 8.25 inches = 121.81 inches ~ 97.6 inches

Net Waste Pumped (data through 08/20/03 on \\AP012\DPU) = 81,924 gal = 81.9 Kgallons

Capillary Height (based on Dip Tube bases) = 0 inches **

Supernatant Volume (12/10/03 In-Tank Video Estimate) = 60 gallons

Sludge Volume = 320,000 gallons *

Height of Sludge Layer (320 Kgal) above bottom ~ 125.4 inches ***

Tank Dished Bottom Volume (Lower 12" Height) = 13,378 gallons ***

Unpumpable Liquid Height Constant = 18 inches *

Assumed Sludge Porosity = 17% *

For 100-series (75' dia.) tanks (500, 750, and 1000K gallon SSTs), 1 inch equals 2750 gallons when above the dish bottom. *

EQUATIONS

NOTE – Since the Final Adjusted Dip Tube Level is less than the Sludge Height, the assumed porosity for sludge will be utilized for the entire saturated waste height.

D.I.L. = Drainable Interstitial Liquid *
= {[Final Adj. Dip Tube Level – Capillary Height – Dish Height] * 2750 gal/in + Dish Vol.} * (assumed sludge porosity)

D.L.R. = Drainable Liquid Remaining *
= D.I.L. + supernatant volume

P.L.R. = Pumpable Liquid Remaining *
= D.L.R.– [((Unpump. Ht – 12") * 2750 gal/in + Dish Vol.) * (assumed sludge porosity)]

*Reference HNF-2978, Rev. 5
**Reference HNF-5556, Rev. 0
***Reference HNF-13019, Rev. 0

Evaluation Prepared by _____ Date 2/4/2004

Evaluation Checked by _____ Date 2/4/04

Single-Shell Tank Interim Stabilization Evaluation Form (cont.)

EVALUATION CALCULATIONS AND COMMENTS:

TANK: **241-S-107**

RESULTS/CALCULATIONS

DIP TUBE BASIS:

DIL = [((97.6" – 0" – 12") * 2750 gal/in + 13,378 gal) * 0.17]

= [235,400 + 13,378 gal * 0.17] = 248,778 * 0.17 = 42,292 gallons (42.3 Kgal)

DLR = DIL + Supernatant = 42,292 gallons + 60 gallons = 42,352 gallons (42.4 Kgal)

PLR = DLR – [((18" – 12") * 2750 gal/in + 13,378 gal) * 0.17]

= 42,352 gal – [(16,500 gal + 13,378 gal) * 0.17] = 42,352 – [29,878 * 0.17] =

= 42,352 gal – 5,079 gal = 37,273 gal = (37.3 Kgal)

SOLIDS VOLUME:

The following description was obtained by review of the in-tank video taken 12/10/03. The ENRAF level during the video was 121.4 inches. The waste level at the tank sidewall is estimated to be 150.5 inches. The waste level at the saltwell screen is the ILL and is 97.6 inches. All estimates regarding waste dimensions were obtained by comparison with known dimensions of installed in-tank equipment and drawing H-2-1783, sht. 1, Rev. 3. The surface of the solid waste is smooth and forms a void space (assumed to be a right circular cone) that slopes downward approximately 29 inches from the tank sidewall to an approximate 9 foot diameter cone shaped depression centered on the saltwell screen. The second cone extends down approximately 24 inches to a 3-foot diameter pool around the saltwell screen. The pool is estimated to be a right circular cylinder with a 6 inch depth. For the purposes of this evaluation, the ILL (dip tube level) will be considered the top of the second (inner) cone and the visible liquid pool volume combined with the saltwell screen volume will be considered the total supernatant volume for the tank.

Per HNF-2978, Rev. 5 and Best Basis Inventory (BBI) located in the TWINS database; the sludge volume of 241-S-107 is 320 Kgal. For reporting purposes, the total quantity of solids in the tank will be calculated and the sludge volume will be subtracted from this total. This volume difference will then be the reported quantity of saltcake in 241-S-107. For this calculation the saltcake and sludge solids volumes include the interstitial liquid but do not include any supernatant liquid.

For the purpose of this evaluation, the solids volume will include an evaluation of the upper surface (subtracting the cone shaped depressions), lower volume and the dish volume. The upper volume of the tank was calculated by finding the volume of the void space, created by the two cones, and subtracting it from the upper surface volume. The area of overlap between the two cones is then added back to the total to correct for subtracting the overlap volume out of both cones. See SOLIDS CALCULATION FIGURE (next page). The upper, lower, and dish volumes are then added together to obtain the total volume as follows:

Evaluation Prepared by _____ Date 2/4/04

Evaluation Checked by _____ Date 2/4/04

Single-Shell Tank Interim Stabilization Evaluation Form (cont.)

EVALUATION CALCULATIONS AND COMMENTS:

TANK: **241-S-107**

RESULTS/CALCULATIONS (cont.)

SOLIDS VOLUME (cont):

SOLIDS CALCULATION FIGURE

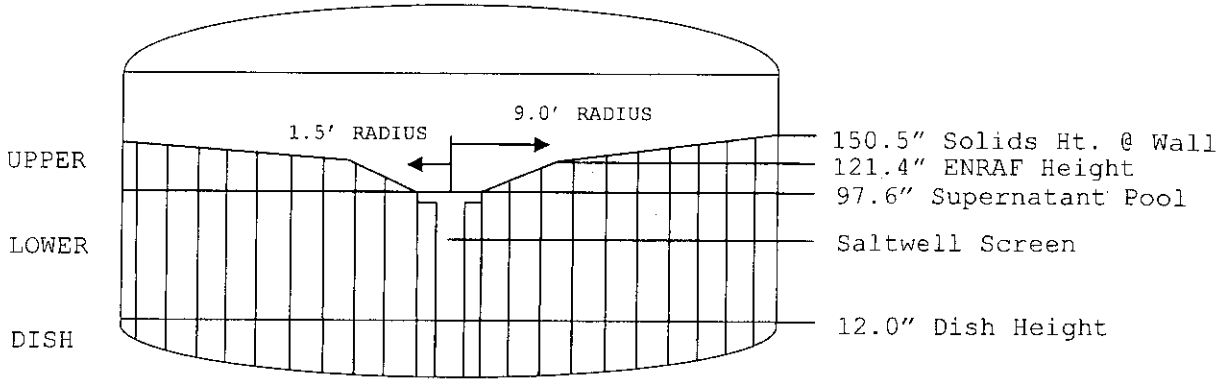

NOTE – The height of overlap between the two right circular cones is 0.8 feet below the ENRAF height. The overall height between the overlap point and the sidewall is 3.2 feet.

Volume (Upper) = [Vol. of (150.5"–97.6") * 2750 gal/in] – Vol. (two right circular cones)

+ Vol. of overlap of two cones (Where right circular cone vol. is = (pi * H/3 * r^{2}) * 7.481 gal/ft^{3}

= 145,475 gal – [(pi/3) (37.5 ft.) ^{2}*(3.2 ft.)+ (pi/3) (9.0) ^{2}*(2.0) - (pi/3) (9.0) ^{2}*(0.8)]*7.481 gal/ft^3

= 145,475 gallons – 35,253 gallons – 1,269 gallons + 508 gallons = 109,461 gallons

Volume (Lower) = (97.6" – 12") * 2750 gal/in = 235,400 gallons

Volume (Dish) = 13,378 gallons

Volume (Supernatant) = Vol. (right circular cylinder) + saltwell screen vol. (right circular cylinder)

Volume (Supernatant) = [pi * ((0.5 ft) * (1.5 ft)^{2} + (8.13 ft) * (0.42 ft)^{2})* 7.481 gal/ ft^{3}] = 60 gallons

Volume (Tot) gallons = 109,461 + 235,400 + 13,378 + 60 = 358,299 gallons = 358.3 Kgal

Solids Volume Remaining = Volume (Tot) – Supernatant Liquid

= 358,299 gallons - 60 gallons = 358,239 gallons = 358.2 Kgal

Saltcake Volume remaining = Solids Volume Remaining – Sludge Volume

= 358,239 gallons gals – 320,000 gallons = 38,239 gallons = 38.2 Kgal

Evaluation Prepared by _____ Date 2/4/2004

Evaluation Checked by _____ Date 2/4/04

Single-Shell Tank Interim Stabilization Evaluation Form (cont.)

EVALUATION CALCULATIONS AND COMMENTS:

TANK: **241-S-107**

RESULTS/CALCULATIONS (cont.)

FLOW DATA:

The final pump flow rate is found by data obtained from operating procedure TO-420-107, Rev. B-0 from 2300 August 7, 2003 to 1330 August 8, 2003 that show a total of 183 gallons of waste pumped over the time period of 870 minutes (14.5 hours). These data were taken over the time span comprising the last stable operating shift of the saltwell pump prior to major equipment failure. The following equation shows the final pumping rate:

Pump Rate = [183 gallons / 870 minutes] = (0.21 gpm)

The flow rate exceeds the minimum stabilization flow rate of 0.05 gallons per minute. The flow rate of 0.21 gallons per minute will be used in the letter of justification for major equipment failure to calculate expected pumping durations and water usage if pumping of 241-S-107 is restarted.

SOFTWARE: None.

REFERENCES:

TO-420-107, Rev. A-1 through B-0, *Perform 241-S-107 Saltwell Pumping.*

H-2-1783, Sht. 1, Rev. 3, *75 ft. Composite Storage Tanks Sections.*

HNF-2978, Rev. 5, *Updated Pumpable Liquid Volume Estimates and Jet Pump Durations for Interim Stabilization of Remaining Single-Shell Tanks.*

RPP-5556, Rev. 0, *Updated Drainable Interstitial Liquid Volume Estimates for 119 Single-Shell Tanks Declared Stabilized*

TFC-ENG-DESIGN-C-10, REV A-3, *Engineering Calculations.*

TFC-ENG-CHEM-P-15, Rev. A-1, *Single-Shell Tank Interim Stabilization Evaluation* procedure.

HNF-SD-RE-TI-178, Rev. 8, *Single-Shell Tank Leak Stabilization Record.*

WS-03-0299, *241-G Weight Factor and Specific Gravity Readings*

Tank Waste Information System (TWINS) 2003, *queried January 27*, 2004, [posted Tank Integrity Reports], Hanford intranet at http://twinswhse.pnl.gov/

Pumpchrts_PE.xls, Excel log of saltwell pumping history from server \\ap012\dpu\pumpchartsPE.

CONCLUSIONS/RECOMMENDATIONS:

241-S-107 has met the criteria for declaration of interim stabilization, due to major equipment failure. See Page 1 for summary and final tank disposition and approvals and letter 7G320-04-MJS.004 "Justification for declaring 241-S-107 interim stabilized, due to major equipment failure."

ATTACHMENTS:

All record attachments, raw data, and calculations for this evaluation, as well as other information may be found in the tank history file maintained by Interim Stabilization Engineering, per the requirements TFC-ENG-CHEM-P-15, section 4.2.19.

Evaluation Prepared by _____ Date 2/4/2004

Evaluation Checked by _____ Date 2/4/04

INTEROFFICE MEMO

CH2MHILL
Hanford Group, Inc.

From: Retrieval/Closure System Engineering 7G320-04-MJS-004
Phone: 373-2408 S7-24
Date: February 18, 2004
Subject: JUSTIFICATION FOR DECLARING 241-S-107 INTERIM STABILIZED DUE TO MAJOR EQUIPMENT FAILURE

To: T. L. Hissong S7-83

Copies:				
	W. B. Barton	S7-70	M. R. Koch	S7-70
	J. M. Conner	S5-08	D. J. Saueressig	S7-20
	R. A. Dodd	S7-83	S. L. Swaney	S7-24
	J. N. Doeler	S7-24	W. T. Thompson	S7-70
	K. C. Dorwick	S7-83	R. P. Tucker	S7-20
	R. A. Flores	S7-20	D. T. Vladimiroff	S7-20
	T. M. Horner	S5-08	MJS File/LB	

Reference Interoffice Memo, M. J. Sutey, to T. L. Hissong, "Justification for Declaring 241-U-111 Interim Stabilized, Due to Major Equipment Failure," 7G230-03-MJS-004, dated June 13, 2003.

The saltwell pumping of Tank 241-S-107 began on March 04, 2002, and continued until August 08, 2003, when the saltwell jet pump failed to start due to a locked pump rotor. Subsequent investigation found the locked rotor was caused by failure of the internal pump thrust bearing, most likely due to excessive wear from loss of recirculation coolant. A total of 81,924 gallons of liquid waste was transferred to Double-Shell Tank (DST) 241-SY-102 before the failure occurred. Waste volume calculations show 42,292 gallons of drainable interstitial liquid remaining in the tank, of which 37,273 gallons is estimated to be pumpable. Video observation reveals there is approximately 60 gallons of supernatant liquid remaining. *Single-Shell Tank Interim Stabilization Evaluation*, TFC-ENG-CHEM-P-15, requires a jet pumped waste tank to contain less than 50,000 gallons of drainable interstitial liquid, less than 5,000 gallons of supernatant liquid, and achieve a maximum pump out or in-flow rate of 0.05 gallons per minute for interim stabilization. However, a single-shell waste tank can be declared interim stabilized by major equipment failure by meeting the drainable interstitial liquid and supernatant quantities, but without meeting the 0.05 gpm criteria. Tank 241-S-107 meets the criteria for interim stabilization due to major equipment failure.

The hydraulic properties and pumping history of waste tanks in S-Farm are similar and indicate that achieving zero pumpable liquid in 241-S-107 is not likely. A quantitative assessment of predicted pumpable liquid remaining was performed per RPP-12324, "Interim Stabilization Calculations: Pumpable Liquid Remaining." Table 3-3 of this document specifies the predicted quantity of pumpable liquid that will remain once the stabilization criteria have been fulfilled. The predicted pumpable liquid remaining for 241-S-107 is 17,500 gallons. If the 241-S-107 saltwell pump was replaced and restarted, the remaining pumpable volume of the tank will be the difference between 37,273 gallons and 17,500 gallons. Therefore, the remaining pumpable volume of 19,773 gallons will be assumed for the following calculations in this evaluation.

If repairs at 241-S-107 were completed, the time to pump the remaining liquid from the tank is dependent upon the flow rates of the liquid wastes into the saltwell screen. The current flow rate of liquid into the saltwell screen at 241-S-107 is calculated at 0.21 gpm, or 302 gallons per day (gpd). By observation, the flow rate of liquid into the saltwell screen will decrease and approach 0.05 gpm (72 gpd) as the interstitial liquid level drops. Therefore, to determine the estimated time to pump

T. L. Hissong
Page 2
February 18, 2004

7G320-04-MJS-004

241-S-107, an average rate of 0.13 gpm (187 gpd) at 50% operating efficiency is assumed. Using this rate and efficiency, the time to remove the remaining pumpable liquid of 19,773 gallons from tank 241-S-107 is approximately 30 weeks.

Over this 30-week period, numerous system and transfer line flushes would be required to prevent the typical plugging seen with saltwell transfer systems. The transfer line hold up volume of 147 gallons necessitates frequent flushes. For example, from August 04, 2003 to August 08, 2003, a total of 552 gallons of flush water and 1034 gallons of dilution water were required to maintain the transfer system operable. During this time a total of 543 gallons of waste was pumped. If pumping was restarted and similar flush volumes were required for operability, an additional 47,580 gallons of flush and dilution waters would be added to the DST waste inventory to remove the estimated 19,773 gallons of liquid from
241-S-107.

To facilitate the replacement of the failed jet pump, the pump pit cover plate at 241-S-107 would have to be removed and workers would be required to work over the open pit. Before the 241-S-107 pump could be replaced, extensive preparation of the pump pit is required to minimize the spread of contamination. Radiological Control Planning prepared an analysis of a similar pit activity for a pump replacement at 241-U-111 (Reference). This evaluation detailed the level of radiation exposure for each member of the field crew performing the job. The work to prepare the pump pit and replace the pump would result in a dose exposure estimated to be 922 mrem for the job.

Costs for repair and continued operation of 241-S-107 are based on Single-Shell Tank Interim Stabilization, Revision 3, Working Schedule Baseline. It is estimated that it would cost $79,000 to replace the failed pump and meet waste disposal costs at 241-S-107. If repairs were made and pumping was restarted, the project expenses to calibrate and maintain the current equipment at 241-S-107 for the projected 30-week pumping schedule is estimated to cost $206,300. Additionally, an annual waste profile costing $9,400 is required during the projected pumping duration of 241-U-111. The total project cost for restart and continued maintenance is $294,700.

Based upon these evaluations of ALARA principles, remaining pumpable liquid, generation of excess wastes, and cost concerns, it is recommended that tank 241-S-107 be declared interim stabilized on the basis of major equipment failure as defined by *Single-Shell Tank Interim Stabilization Evaluation*, TFC-ENG-CHEM-P-15.

If you have any questions, please call me on 373-2408, or Mr. S. L. Swaney on 373-3472.

for T. S. Krogsrud
M. J. Sutey, Manager
Retrieval/Closure System Engineering
CH2M HILL

CONCURRENCE:

Michael R Koch
M. R. Koch, Director
Retrieval/Closure Engineering
CH2M HILL

Date 2/18/04

SLS/ard

ATTACHMENT D

Single-Shell Tank Interim Stabilization Form

Tank: 241-S-108
Reason Jet-Pumping Halted:
[X] Meets 0.05 gpm criteria, Date of shutdown 9/12/96
[ ] Major equipment failure, Date of shutdown _____
Surface Condition & Comments: No supernatant is visible on the surface of the waste. The waste appears to be saltcake. It is difficult to estimate the elevation difference between the high and low points of the surface, it appears relatively level, but there is some caving and crowning

Saltwell pumping commenced on 3/8/96. The saltwell screen was flushed on four different occasions when it appeared that the endpoint might be nearing (6/16, 8/1, 8/27, and 9/4). The last flush had little effect. During the last week the pump would trip due to a lack of fluid in the salt well several times per day and it was necessary to wait for fluid to collect in the saltwell before the pump could be restarted. On 9/12/96, a determination of the saltwell in-flow rate was performed and met the .05 gpm criteria. A porosity estimate was performed on 9/26/96.

An in-tank video was delayed until flammable gas issues concerning tank access were resolved and a new procedure for in-tank videos was written. The video was taken on 12/3/96.

The final solids volume below is based on the ENRAF level during saltwell pumping.

Evaluation: (See continuation page for calculations and additional comments)
Photograph review completed - Date of most recent photograph 12/3/96
Tank history review completed. [X]
Tank temperature profile reviews completed. [X]
Starting Liquid Level 102.1 in Method Saltwell Dip Tubes Date 3/29/96
Final Liquid Level 16.7 in Method Saltwell Dip Tubes Date 9/26/96

Total Net Pumped Volume 39777 gal
Capillary Height Used in Calculation 12 in
Final Solids Volume 448700 gal
Final Average Flowrate 0.047 gpm
Calculated Porosity 0.169
Supernatant none
Drainable Interstitial Liquid 4040 gal
Drainable Liquid Remaining 4040 gal
Pumpable Liquid Remaining 0 gal
[ ] Justification letter attached
Disposition of Tank:
[X] Tank Interim Stabilized
[ ] Tank Not Interim Stabilized; Restart Pumping
Evaluation Performed by: [signature] Date 12/18/96
Checked by: [signature] Date 12/18/96
Approved By:
Team Lead, Stabilization Engineer [signature] Date 12/18/96
Manager, Interim Stabilization Engineering [signature] Date 12/18/96
Manager, West Tank Farms Transition Project [signature] Date 12/20/96

Distribution: TWRS Nuclear Safety, Surveillance Engineering, Systems Engineering, Single Shell Tank History File, TPA Integration Control, Approving Managers, Evaluation Performer, Team Lead, and Checker signatures

EVALUATION CALCULATIONS AND COMMENTS:

TANK: 241-S-108

DETERMINATION OF TANK IN-FLOW RATE

The saltwell pump shutdown at 1557 on 9/12/96.

The following weight factor data was collected from 1556 through 1700:

TIME	WEIGHT FACTOR (IN)	TIME	WEIGHT FACTOR (IN)
1556	1.34	1630	11.83
1558	3.59	1632	11.83
1600	4.62	1634	11.83
1602	5.12	1636	12.86
1604	6.87	1638	12.86
1606	6.87	1640	12.86
1608	7.94	1642	12.86
1610	9.00	1644	12.97
1612	9.00	1646	12.97
1614	9.54	1648	12.97
1616	10.68	1650	12.97
1618	10.68	1652	12.97
1620	10.68	1654	12.97
1622	10.68	1656	12.97
1624	11.71	1658	13.54
1626	11.71	1700	13.54
1628	11.83		

The greatest rate of level increase occurred before saltwell level rose as high as 10 inches at which point specific gravity indication becomes meaningful. A value of 1.401 was used for specific gravity. This value was obtained from attachment 2 to the Waste Compatibility Assessment (West Tank Farms Transition Projects Engineering - Internal Memo 77240-95-030).

Saltwell Level = (Weight Factor) / (Specific Gravity)

Saltwell Level at 1556 = (1.34)/(1.401) = 0.956 in

Saltwell Level at 1700 = (13.54)/(1.401) = 9.66 in

Saltwell Level Increase = 9.66 - 0.956 = 8.70 in

The saltwell screen is a 10 inch diameter cylinder. Therefore the volume of fluid entering the cylinder may be calculated as follows:

$V = (pi) * (r)^2 * (h)$
where V = fluid volume
r = screen radius
h = level increase

$V = (pi) * (5\ in)^2 * (8.70\ in) = 683\ in^3 * (1\ gal)/(231\ in^3) = 2.96\ gal$

Evaluation Performed by M Dreier Date 12/18/96

Checked by [illegible] Date 12/18/96

EVALUATION CALCULATIONS AND COMMENTS:

TANK: 241-S-108

Determination Of Tank In-Flow Rate (cont)

Since pump shutdown occurred at 1557, the time period for the determination of saltwell in-flow rate was 63 min.

Saltwell In-Flow Rate = (Fluid Volume) / (Time)

Saltwell In-Flow Rate = (2.96 gal)/(63 min) = .0470 gpm.

The determination above was for the first hour after shutdown. The in-flow rate continued to decrease after the first hour. See the data below:

TIME	WEIGHT FACTOR	LEVEL INCREASE	IN-FLOW RATE	TIME PERIOD
1700	13.54 in	8.70 in	.0470 gpm	63 min
1800	14.12 in	9.40 in	.0260 gpm	123 min
1900	14.73 in	9.83 in	.0183 gpm	183 min
2000	14.73 in	9.83 in	.0123 gpm	243 min

DETERMINATION OF DRAINABLE INTERSTITIAL FLUID

Saltwell pumping commenced on 3/8/96 and 6767 gal of waste were transferred before a temporary shutdown on 3/23/96.

The first stable saltwell level was obtained on 3/29/96 before pumping was resumed. The level determination was made using the dip tubes and associated instrumentation on the saltwell pump skid.

Weight Factor = 142.9 in
Specific Gravity = 1.40
Level = 102.1 in

Saltwell pumping was completed on 9/12/96 and the saltwell level was declared stable on 9/26/96. Once again the level determination was made using the dip tubes and associated instrumentation on the saltwell pump skid.

Weight Factor = 24.1 in
Specific Gravity = 1.445
Level = 16.7 in

Evaluation Performed by [signature] Date 12/18/96

Checked by [signature] Date 12/18/96

EVALUATION CALCULATIONS AND COMMENTS:

TANK: 241-S-108

DETERMINATION OF DRAINABLE INTERSTITIAL FLUID (CONT)

Tank 241-S-108 was not considered to have any supernatant fluid and ENRAF levels supported this. There was little change in ENRAF level during saltwell pumping. The ENRAF was calibrated just before pumping commenced on 3/8/96 and was calibrated again on 9/4/96. This is the reason for the .51 inch jump in level between 9/4/and 9/5. The in-tank video showed that the ENRAF plummet has made a hole in the waste. The discrepancy in level is due to the build up of waste on the plummet. The actual change in level was only .027 in during the saltwell pumping. For this reason the change in tank level was not considered in determining porosity.

ENRAF Level	DATE	ENRAF LEVEL	DATE	ENRAF LEVEL	DATE
170.89 in	3/8/96	170.48 in	6/1/96	170.16 in	9/4/96
170.70 in	4/1/96	170.39 in	7/1/96	170.67 in	9/5/96
170.59 in	5/1/96	170.29 in	8/1/96	170.62 in	9/12/96

Total Gallons of Waste Pumped = 48154

Total Gallons of Water Flushed Through the Pump, DOV, or Saltwell Screen = 1690

Total Gallons of Water Flushed Through the Transfer Line to 244-S = 1720

Total Gallons of Waste Pumped Between Initial and Final Stabilized levels = 48154 - 6767 - (1690 - 80) = 39777
NOTE: The 80 gal represents the flush volume between 3/8/96 and 3/29/96.

Porosity was determined using the following formula:
Porosity = (Total Gal of Waste Pumped Between Initial and Final Stable Levels) / ((Initial Stable Level - Final Stable Level) * (2750 gal/in))

Porosity = 39777/((102.1 - 16.7)*(2750)) = .169 or 16.9%

Volume of Drainable Interstitial Fluid =((Final Stable Level - Capillary Ht) * (2750) * (Porosity))

Capillary Ht for Saltcake Waste = 12 in

Final stable fluid level = 16.7 in + 2 in (ht of dip tube above bottom of screen) + 2 in (ht of screen above tank bottom) = 20.7 in

Drainable Interstitial Fluid = ((20.7 - 12) * (2750) * (.169) = 4040 gal

NOTE: S-108 has a dished bottom in which the bottom 12 inches of the tank hold a total of 12500 gal rather than 2750 gal/in. However, the capillary for a saltcake DIL determination is also 12 in. In addition the riser used for the screen and diptubes was the 42 in riser in the middle of the tank. This means that the capillary volume in this case can be assumed to be the dished bottom of the tank and no correction for the dished bottom is needed.

Evaluation Performed by JM Daeler Date 12/18/96

Checked by [illegible] Date 12/18/96

EVALUATION CALCULATIONS AND COMMENTS:

TANK: 241-S-108

DETERMINATION OF DRAINABLE INTERSTITIAL FLUID (CONT)

Drainable Fluid Remaining = Drainable Interstitial Fluid + Supernatant Fluid

Volume of Supernatant Fluid = 0 gal

Drainable Fluid Remaining = 4040 + 0 = 4040 gal

Pumpable Fluid Remaining = Drainable Fluid Remaining -((18 in Unpumpable Ht) * (2750) * (Porosity))

Pumpable Fluid Remaining = 4040 - ((18)*(2750)*(.169) = 4040 - 8370 < 0
Pumpable Fluid is assumed to be 0.

TANK SOLIDS LEVEL

The Hanlon Report indicates that there are 604000 gallons of solids in the tank. The video shows a relatively level surface with some caving and crowning. The volume occupied by 604000 gal of solids would require a tank level of at least 228 in. The ENRAF level at the completion of pumping was 170.62 in. The tank level has been close to this reading for the last ten years. If the solids were level, the volume would be ((170.62-12) * 2750 + 12500) = 448700 gal. I think that this should be used for the solids volume as a more accurate figure than 604000 gal and a change to the Hanlon report will be submitted.

Evaluation Performed by [signature] Date 12/18/96

Checked by [signature] Date 12/18/96

Single-Shell Tank Interim Stabilization Evaluation Form.

TANK: **241-S-109**

(Jet Pumping only) Reason for stopping jet pumping:

[x] Meets 0.05 gpm criteria, Date of Shutdown _____01/27/01_____

[ ] Major equipment failure, Date of Shutdown _____

Tank Waste Surface Level Condition and Comments: _____ SEE DESCRIPTION PAGE 2 _____

Evaluation: (See continuation page for calculations and additional comments)

Photo/video review completed - Date of most recent photo/video _____03/29/01_____

[x] Tank history, temperature profile and intrusion reviews completed and no anomalies identified

Starting Liquid Level ___ 142.0" _____ Method ____ LOW _____ Date ___09/19/00____
Final liquid level _____ 47.5" _____ Method ____DIP TUBES____ Date ___04/26/01_____
Total Net Pumped Volume ____34.2 Kgal_____
Capillary Height Used in Calculation ___0"____
Final Solids Volume _____517.7 Kgal_____
Final Average Flow rate _____0.028 gpm_____
Calculated Porosity _____0.142_____
Supernatant Volume Remaining ____ 0 gal ____
Drainable Interstitial Liquid _____15.7 Kgal_____
Drainable Liquid Remaining _____15.7 Kgal____
Pumpable Liquid Remaining ____ 11.5 Kgal_____

[ ] Justification letter attached (Interim Stabilization Cognizant Engineer)

Disposition of Tank:

[x] Tank Interim Stabilized
[ ] Tank Not Interim Stabilized; Re-start Pumping

Evaluation prepared by SST Cognizant Engineer: JM Doeler Date 6/11/01

Evaluation checked by Process Engineer: VC Boyles Date 6/11/01

Interim Stabilization Cognizant Engineer: [signature] Date 6/11/2K1

APPROVED BY:

Manager, Interim Stabilization Engineering T.M. Horner Date 6/11/01

Manager, Process Engineering [signature] Date 6/11/01

Manager, SST Engineering W.E. Bryan Date 6/11/01

Single-Shell Tank Interim Stabilization Evaluation Form. (cont.)

EVALUATION CALCULATIONS AND COMMENTS:

TANK: **241-S-109**

The surface of 241-S-109 is primarily a white colored salt crystal with small patches of dark salt visible due to saltwell/sampling activities. Approximately 95% of the waste surface is covered by the salt formations. The surface level slopes slightly from the tank sidewall down to a depression in the center of the tank. The depression, centered between both saltwell screens, is circular shaped and estimated to be 9 feet in diameter based on the visible portions of the saltwell screens. The waste surface appears rough and dry and shows signs of cracking and slumping due to saltwell pumping. The ENRAF probe is located 6 feet from the tank center and reads 171.0 inches. Liquid observation well (LOW) readings indicate an interstitial liquid level (ILL) of 54.5 inches. Dip tube readings are located at the tank center and report an adjusted liquid surface level of 47.5 inches. This level is based on elevation & fabrication drawings that show the dip tubes installed 19.25 inches above the tank bottom. There is no visible liquid within the tank, making the supernatant estimate 0 gallons. All levels are based off the tank centerline dished bottom. Calculations do not take into account any retained gas within the waste.

For the purposes of this evaluation, the dip tube readings will be used to determine the final quantities of drainable and pumpable liquid in tank 241-S-109. To calculate drainable interstitial liquid (DIL) using dip tubes, capillary height is defined as zero in the equation per RPP-5556, Rev. 0. This is due to there being no solid waste in the saltwell screen to retain liquid through capillary forces.

DATA

Final LOW Reading (05/31/01) = 54.468 inches ~ 54.5 inches

Final ENRAF Reading (06/05/01) = 170.97 inches ~ 171.0 inches

Dip Tube Reading (04/26/01) = 28.21 inches + 19.25 inches (distance off tank bottom)
= 47.46 inches ~ 47.5 inches

Initial Liquid Level from 9/19/00 (LOW starting point) = 142.0 inches

Porosity =(Net waste pumped since 9/19/00)/(Init. liquid level– final LOW level)*2750 gal/in

Height of Sludge Layer (13 Kgal) above bottom = 12.18 inches @@

Tank Dished Bottom Volume (Lower 12" Height) = 12,500 gallons **

Supernatant Volume (03/29/01 In-Tank Video Estimate) = 0 gallons

D.I.L. = Drainable Interstitial Liquid ##
= {[(Saturated Solids Ht. – 12") – (0" Capillary Ht.)]* 2750 gal/in + 12,500 gal}* porosity

D.L.R. = Drainable Liquid Remaining **
= D.I.L. + supernatant liquid

P.L.R. = Pumpable Liquid Remaining **
= D.L.R. – [((18" Unpumpable Ht – 12")* 2750 gal/in + 12,500 gallons) * porosity]

**Reference HNF-2978, Rev. 2
##Reference RPP-5556, Rev. 0
@@Reference HNF-EP-0182-155

Evaluation Prepared by JM Doeler SS Date 6/11/01

Evaluation Checked by VC Boyles Date 6/11/01

Single-Shell Tank Interim Stabilization Evaluation Form. (cont.)

EVALUATION CALCULATIONS AND COMMENTS:

TANK: **241-S-109**

POROSITY:

Porosity = Net waste pumped (since 9/19/00)/ [(Initial liquid level – final LOW level) *2750 gal/in]

= 34,146 gallons / [(142.0" – 54.5") * 2750 gal/in] = 14.2%

DIP TUBE BASIS:

(Note: The lower 12.18" (13,000 gallons) of the tank volume is sludge @ 15% porosity – Ref. HNF-2978)

DIL = [(47.5" – 12.18") * 2750 gal/in] * 0.142 + (13,000 gal * 0.15)

= [(97,130 * 0.142) + (13,000 * 0.15)] = 13,790 gal + 1950 gal = 15,740 gal (15.7 Kgal)

DLR = DIL + Supernatant = 15,740 gallons + 0 gallons = 15,740 gallons (15.7 Kgal)

PLR = DLR – [[(18" – 12.18") * 0.142 * 2750 gal/in + (13,000 gal)]* 0.15]

= 15,740 gal – [(2,275 gal) + (1950 gal)] = 15,740 – 4225 = 11,515 gallons (11.5 Kgal)

SOLIDS VOLUME:

The upper waste surface level at the tank sidewall is approximated at 220 inches. The waste slopes gradually from the wall towards a circular shaped depression with a diameter of 9 feet (assumed to be the frustum of a cone) to a level of 171.2 inches based on ENRAF readings from March 29th, 2000. At this point the slope of the waste drops vertically 6 inches to a level of 165.5 inches to form the depression (assumed to be a right circular cylinder). This calculation does not account for the surface disturbance and crater created by waste sampling activities, as much of the interior area is not visible during the video examination. Also, this calculation assumes the cylindrical depression is located at the centerline of the tank. Finding the volume of the void space, created by the cone frustum, and subtracting it from the surface volume calculated the upper volume of the tank. The middle waste volume is calculated by subtracting the volume of the right circular cylinder from the total middle waste volume. The surface and middle volumes are then added to the lower and dish volumes to obtain the total volume as follows:

Volume (upper) = [Vol. of (220.0"–171.2") * 2750 gal/in] – Vol. (cone frustum)

(Where frustum volume is = pi * H/3 (R_1^2 + R_2^2 + sqrt. (R_1^2 * R_2^2)) * 7.481 gal/ft^3)

= 134,200 gal – [(pi * 4.07'/3) * ((37.5')^2 + (4.5')^2 + ((37.5')^2 * (4.5')^2)^0.5)] * 7.481 gal/ft^3

= 134,200 gallons – 50,865 gallons = 83,335 gallons

Volume (middle) = [Vol. of (171.2" – 165.5)* 2750 gal/in] – Vol. (right circular cylinder)

= 15,675 gallons – [pi * (4.5')^2 * 0.5'] * 7.481 gal/ft^3 = 15,675 – 240 gallons = 15,435 gallons

Volume (lower) = [Vol. of (165.5" – 12)* 2750 gal/in] = 153.5" * 2750 gal/in = 422,125 gallons

Evaluation Prepared by JM Doeler SLS Date 6/11/01

Evaluation Checked by VC Boyles Date 6/11/01

Single-Shell Tank Interim Stabilization Evaluation Form. (cont.)

EVALUATION CALCULATIONS AND COMMENTS:

TANK: **241-S-109**

SOLIDS VOLUME (cont.):

Vol. (Tot) = Vol. (surface) + Vol. (middle) + Vol. (lower) + Vol. dish bottom (lower 12")

Vol. (Tot) = 83,335 gal + 15,435 gal + 422,125 gal + 12,500 gal = 533,395 gal = 533.4 Kgal

Solids Volume remaining = Volume (tot) – Drainable Liquid Remaining (DLR)

= 533,395 gals – 15,740 = 517,655 = 517.7 Kgal

FLOW DATA:

The trend of monthly pumping rates of 241-S-109 over the life of the pumping campaign reveals the following:

Month	Hours	Mode	Net Waste (Kgal)	Pump Rate (gpm)
09/00	67	Bypass	3.0	0.62
10/00	447	Bypass	18.2	0.66
11/00	414	Auto	9.5	0.37
12/00	299	Auto	2.9	0.16
01/01	256	Auto	0.6	0.038

The final pump rate is found by data obtained from 0130 January 27th to 1130 January 27th, 2001 that show a total of 18 gallons of waste were pumped over the time period of 633 minutes (10.55 hours), while the pump ran in AUTOMATIC mode. This time span was the last stable operating duration following the final dip tube flush on January 26th. Data sheets show a flush was performed at 0330 hours, but the amount was not recorded. Conservatively, this flush total (assumed to be 10 gallons) is left in the 18 gallon total for the shift. The pump ran approximately 8 hours after the January 27th date until final shutdown of the system. The following equation shows the pumping rate for this final pump run:

Pump Rate = [18 gallons/633 minutes] = (0.028 gpm)

Evaluation Prepared by JM Daeler SLS Date 6/11/01

Evaluation Checked by V C Boyles Date 6/11/01

Single-Shell Tank Interim Stabilization Form

TANK: 241-S-110

Reason Jet-Pumping Halted:

[X] Meets 0.05 gpm criteria, Date of Shutdown 7/16/96
[X] Major equipment failure, Date of Shutdown 7/16/96

Surface Condition and Comments: No supernatant is visible on the surface of the waste. There is evidence of some fluid in the saltwell and around the screen. The waste itself appears to be saltcake. The level is not consistent and there appears to have been some caving and crowning.

Saltwell pumping commenced on 2/24/96. On 3/5/96 operators were unable to restart the pump after a shutdown. Troubleshooting revealed that whenever the pump was started the thermal overloads in the pump motor (cont on page 2)

Evaluation: (See continuation page for calculations and additional comments)

Photograph review completed - Date of most recent photograph 12/11/96
Tank history review completed. [X]
Tank temperature profile reviews completed. [X]
Starting Liquid Level 140 in Method Saltwell Dip Tubes Date 6/2/96
Final Liquid Level 92.1 Method Saltwell Dip Tubes Date 9/30/96

Total Net Pumped Volume 16678 gal (13826 for porosity determination)
Capillary Height Used in Calculation 12 in
Final Solids Volume 389000 gal
Final Average Flowrate 0.0408 gpm (first 4 hr)
Calculated Porosity 0.129
Supernatant none
Drainable Interstitial Liquid 29800 gal
Drainable Liquid Remaining 29800 gal
Pumpable Liquid Remaining 23400 gal
[X] Justification Letter attached

Disposition of Tank:

[X] Tank Interim Stabilized
[ ] Tank Not Interim Stabilized; Restart Pumping

Evaluation Performed by [signature] Date 1/24/97

Checked by [signature] Date 1/27/97

Approved By:

Team Lead, Stabilization Engineer [signature] Date 1/27/97

Manager, Tank Farm Engineering Richard E. Larson Date 1/24/97

Manager, West Tank Farm Operations Judith Burton Date 1/31/97

Distribution: TWRS Nuclear Safety, Surveillance Engineering, Systems Engineering, Single Shell Tank History File, TPA Integration Control, Approving Managers, Evaluation Performer, Team Lead, and Checker signatures

EVALUATION CALCULATIONS AND COMMENTS:

TANK: 241-S-110

Surface Condition and Comments (cont):

controller would trip. Troubleshooting revealed that the pump motor current draw was in excess of the motor thermal overload protection. Insulation testing of the windings showed, the motor windings were still intact. It is believed a partial blockage of the pump recirculation line caused the bearings to be starved of proper lubrication and prevented proper motor cooling. It was also at this time that the specific gravity indication went to 2.0. Troubleshooting revealed no problem with the equipment, but no amount of flushing or blowdown would clear the specific gravity indication until late September.

The pump would still run, although it required the use of overloads with higher setpoints. Therefore, troubleshooting continued in the hope that the bearing had not failed and that the plugged recirculation line could be cleared by dislodging the plug. At one point the run current appeared to be decreasing. It proved to be a false hope. Troubleshooting ended when one of the motor windings failed, probably due to a locked rotor.

A modification was made to the recirculation line of the replacement pump. This mod added a remotely controlled isolation valve, a flow meter, and another line to allow for flush water into the recirculation line for clearing any possible plugging. In the event that low flow was indicated in the recirculation line, the pump would shutdown, and the line could be flushed.

The modified pump was installed in late May at a total cost of approximately $70,000 and a total dose of 640 mR.

Saltwell pumping resumed on 6/3/96 and continued until 7/16/96 when the pump shutdown on low recirculation flow and could not be restarted. This time troubleshooting revealed a different problem. The motor turned freely without a thermal overload. The pump current draw was determined to be low. Flushing was possible through the recirculation line indicating that the recirculation line was clear. When running the pump discharge pressure was very low and there was no indication of flow. The motor would operate, but the pump would not. This was considered an indication that the pump impeller had become separated from the motor shaft. It was decided to allow the saltwell level to stabilize and then make a determination on whether the tank could be declared interim stabilized.

At the time of shutdown, the saltwell weight factor was 36.21 inches. After 12 hours the weight factor had risen to almost 77 inches. It continued to increase slowly reaching 125 inches on 8/1/96 and 140 inches on 8/31/96. It was not declared stable until late September.

An in-tank video was delayed until flammable gas issues concerning tank access were resolved and a new procedure for in-tank videos was written. The video was taken on 12/11/96.

Evaluation Performed by [signature] for Jeff Decker Date 1/24/97

Checked by [signature] Date 1/23/97

EVALUATION CALCULATIONS AND COMMENTS:

TANK: 241-S-110

DETERMINATION OF TANK IN-FLOW RATE

The saltwell pump shutdown at 0606 on 7/16/96.

The following weight factor data was collected from 0606 through 0708:

TIME	WEIGHT FACTOR (IN)	TIME	WEIGHT FACTOR (IN)
0606	28.16	0640	45.40
0608	29.03	0642	46.12
0610	30.06	0644	46.62
0612	31.32	0646	47.12
0614	32.39	0648	47.38
0616	33.34	0650	47.76
0618	34.53	0652	48.22
0620	35.63	0654	48.49
0622	36.51	0656	48.83
0624	37.85	0658	49.33
0626	38.68	0700	49.48
0628	39.68	0702	49.75
0630	40.97	0704	49.98
0632	41.93	0706	50.70
0634	42.80	0708	50.70
0636	43.68		
0638	44.60		

Since the specific gravity indication was not accurate during the campaign. A value of 1.390 was used for specific gravity. This value was obtained from attachment 2 to the Waste Compatibility Assessment (West Tank Farms Transition Projects Engineering - Internal Memo 77240-95-030).

Saltwell Level = (Weight Factor) / (Specific Gravity)

Saltwell Level at 0606 = (28.16)/(1.39) = 20.26 in

Saltwell Level at 0706 = (50.70)/(1.39) = 36.47 in

Saltwell Level Increase = 36.47 - 20.26 = 16.21 in

The saltwell screen is a 10 inch diameter cylinder. Therefore the volume of fluid entering the cylinder may be calculated as follows:

$V = (pi) * (r)^2 * (h)$
where V = fluid volume
r = screen radius
h = level increase

$V = (pi) * (5\ in)^2 * (16.21\ in) = 1270\ in^3 * (1\ gal)/(231\ in^3) = 5.50\ gal$

Evaluation Performed by [signature] for Jeff Dreher Date 1/24/97

Checked by Michael R Kuhl Date 1/23/97

EVALUATION CALCULATIONS AND COMMENTS:

TANK: 241-S-110

Determination Of Tank In-Flow Rate (cont)

The time period for the determination of saltwell in-flow rate was 60 min from pump shutdown at 0606 to 0706.

Saltwell In-Flow Rate = (Fluid Volume) / (Time)

Saltwell In-Flow Rate = (5.50 gal) / (60 min) = .0917 gpm

The In-Flow Rate exceeded the .05 gpm criteria for the first hour after shutdown. However the flow rate continued to decrease, and the average flow rate for the first 4 hours after shutdown met the .05 gpm criteria and continued to decrease afterwards. Tank In-Flow Rate met the requirements despite the shutdown being due to pump failure. See the table below:

TIME	WEIGHT FACTOR	LEVEL	LEVEL INCREASE	IN-FLOW RATE	TIME PERIOD
0706	50.70 in	36.47 in	16.21 in	.0917 gpm	060 min
0806	58.18 in	41.86 in	21.60 in	.0616 gpm	120 min
0910	68.48 in	49.27 in	29.01 in	.0536 gpm	184 min
1010	68.89 in	49.56 in	29.30 in	.0408 gpm	244 min
1112	69.17 in	49.76 in	29.50 in	.0328 gpm	306 min
1206	71.95 in	51.76 in	31.50 in	.0298 gpm	360 min
1806	76.91 in	55.33 in	35.07 in	.0165 gpm	720 min

DETERMINATION OF DRAINABLE INTERSTITIAL FLUID

Saltwell pumping commenced on 2/24/96 and 2852 gal of waste were transferred before pumping was interrupted by the first pump failure on 3/5/96.

The first stable saltwell level was obtained on 6/2/96 before pumping was resumed on 6/3/96 after replacing the failed saltwell pump. The weight factor determination was made using the dip tubes and associated instrumentation on the saltwell pumping skid. The specific gravity value of 1.390 is based on the sample results for the compatibility assessment discussed previously and a backup sample taken while the pump was being replaced.

Weight Factor = 194.6 in
Specific Gravity = 1.39
Level = 140 in

Saltwell pumping resumed on 6/3/96 and continued until the second pump failure on 7/16/96. The level was declared stable on 9/30/96. The level determination was made using the dip tubes and associated instrumentation on the saltwell pumping skid.

Weight Factor = 128 in
Specific Gravity = 1.39
Level = 92.1 in

Evaluation Performed by [signature] for Jeff Dreher Date 1/24/97

Checked by [signature] Date 1/23/97

EVALUATION CALCULATIONS AND COMMENTS:

TANK: 241-S-110

DETERMINATION OF DRAINABLE INTERSTITIAL FLUID (CONT)

The dip tubes and instrumentation for specific gravity were used for the final level determination. Specific gravity indication had jumped to 2.0 early in the campaign and remained at 2.0 for the rest of the campaign despite all troubleshooting efforts and all the attempts to blow down and flush the dip tubes. On 9/24/96 when weight factor had apparently stabilized at 140.5 after two months, a routine flush and blowdown caused the specific gravity and weight factor indication to decrease. The weight factor immediately dropped to 130 inches and quickly stabilized at 128 inches. The specific gravity indication dropped quickly to 1.5 and stabilized at 1.39 over the next few days. Because of this, the final weight factor used in the porosity determination was 140.5 in to provide a more conservative figure for porosity. Given a specific gravity of 1.39, this gives a final level of 101 in for use in determining porosity.

Tank 241-S-110 was not considered to have any supernatant fluid and ENRAF levels supported this. There was little change in ENRAF level during saltwell pumping. During pumping the ENRAF level decreased from 149.59 inches when pumping began on 2/24/96 to 148.99 inches when the second pump failed on 7/16/96. This is a change of only .6 inches and indicated that there was no supernatant and that the change in supernatant level could be ignored in determining porosity. The tank video taken in December 1996 verified that there was no supernatant fluid in the tank.

Total Gallons of Waste Pumped = 17288

Total Gallons of Water Flushed Through the Pump, DOV, or Saltwell Screen = 831

Total Gallons of Water Flushed Through the Pump, DOV, or Saltwell Screen Between the Initial and Final Stable Levels = 610

Total Gallons of Water Flushed Through the Transfer Line = 271

Total Gallons of Waste Pumped Between the Initial and Final Stable Levels = 17288 - 2852 - 610 = 13826

Porosity was determined using the following formula:
Porosity = (Total Gal of Waste Pumped Between Initial and Final Stable Levels) / ((Initial Stable Level - Final Stable Level) * (2750 gal/in))

Porosity = 13826/((140 - 101) * (2750)) = .129 or 12.9%

Volume of Drainable Interstitial Fluid = ((Final Stable Level - Capillary Height) * (2750) * (Porosity))

Capillary Height for Saltcake Waste = 12 in

Evaluation Performed by [signature] Jeff Deker Date 1/24/97

Checked by [signature] Date 1/23/97

EVALUATION CALCULATIONS AND COMMENTS:

TANK: 241-S-110

DETERMINATION OF DRAINABLE INTERSTITIAL FLUID (CONT)

Final Stable Fluid Level = 92.1 in + 2 in (ht of dip tube above the bottom of the screen) + 2 in (ht of screen above the tank bottom) = 96.1 in

Drainable Interstitial Fluid = ((96.1 -12) * (2750) * (.129) = 29800 gal

NOTE: S-110 has a dished bottom in which the bottom 12 inches of the tank hold a total of 12500 gal rather than 2750 gal/in. However the capillary for a saltcake DIL determination is also 12 in. In addition the riser used for the screen and dip tubes was the 42 in riser in the center of the tank. This means that the capillary volume in this case can be assumed to be the dished bottom of the tank and no correction for the dished bottom is needed.

Drainable Fluid Remaining = Drainable Interstitial Fluid + Supernatant Fluid

Volume of Supernatant Fluid = 0 gal

Drainable Fluid Remaining = 29800 + 0 = 29800 gal

Pumpable Fluid Remaining = Drainable Fluid Remaining - ((18 in Unpumpable Ht) * (2750) * (Porosity))

Pumpable Fluid Remaining = 29800 - ((18) * (2750) * (.129)) = 29800 - 6400 = 23400 gal

Evaluation Performed by [signature] for Jeff Dexter Date 1/24/97

Checked by [signature] Date 1/23/97

Attachment D (cont)
(7)

Letter of Justification for Declaring 241-S-110 Interim Stabilized

Saltwell pumping commenced on 2/24/96 and continued only briefly before the pump failed on 3/5/96. It is believed that this pump failure was due to a piece of tank waste which clogging the pump recirculation line and preventing proper pump lubrication and cooling. The pump was repeatedly flushed and jogged in an attempt to clear the clogged recirculation line although the motor amperage draw excessively high. This failed to work and the effort ended when one of the motor windings failed.

It was decided to replace the pump and to modify the recirculation line to prevent another pump failure due to a plugged recirculation line. The modification made it possible to monitor recirculation line flow and to flush the recirculation line using a remotely controlled isolation valve, a flow meter, and a flush line to the recirculation line. In the event of a low flow rate in the recirculation line, the saltwell pump would shutdown and alarm. The recirculation line could then be flushed.

The failed pump was replaced with the modified pump in May 1996. The cost of pump replacement including the design work for the mod was approximately $70,000 and the total exposure to personnel during pump replacement was 640 mR.

Pumping was resumed on 6/3/96 and continued until the second pump failed on 7/16/96. This time the failure was not due to the recirculation line. Instead the pump impeller had become separated from the motor shaft. It was decided that since rough estimates for porosity indicated that the amount of drainable fluid in the tank was <50,000 gal, to let the saltwell level stabilize. A determination of whether the tank could be considered interim stabilized instead of replacing another pump would be made after the level stabilized. It took two months for the level to stabilize, and the in-tank video was delayed until 12/11/96. The results of the video show that the only evidence of fluid occurred in the depression surrounding the saltwell screen. No supernatant was observed.

In order for a tank to be declared interim stabilized the following things must be true:

1. The tank contains <50,000 gal of drainable fluid.
2. The tank contains <5,000 gal of supernatant.
3. The inflow rate to the saltwell screen <.05 gal/min.

Tank 241-S-110 meets the criteria for interim stabilization without continued pumping. The tank contains 29,800 gal of drainable fluid. No supernatant was observed. The final tank in-flow rate met the criteria of .05 gpm. It is not advisable to incur further expense and exposure to install a third pump to reduce the inventory of drainable fluid. Engineering recommends that Tank 241-S-110 be declared interim stabilized.

Approved By: JM Darler 1/31/97 (evaluator)

Team Lead, Stabilization Engineer Michael R Kal Date 1/31/97

Manager, Tank Farm Engineering Richard E. Lutton for Date 1/31/97

Manager, West Tank Farm Operations Judith M Bunton Date 1/31/97

Director, Tank Farm Operations [signature] Date 31 Jan 97

Single-Shell Tank Interim Stabilization Evaluation Form

TANK: **241-S-111**

(Jet Pumping only) Reason for stopping jet pumping:

[ ] Meets 0.05 gpm criteria, Date of Shutdown _____

[X] Major equipment failure, Date of Shutdown 10/08/03

Tank Waste Surface Level Condition and Comments: _____ SEE DESCRIPTION PAGE 2 _____

Evaluation: (See continuation page for calculations and additional comments)

Photo/video review completed - Date of most recent photo/video 03/02/04

[x] Tank history, temperature profile and intrusion reviews completed and no anomalies identified

Starting Liquid Level 204.2" Method ENRAF Date 12/17/01
Final liquid level 86.2" Method LOW Date 05/10/05
Total Net Pumped Volume 98.6 Kgal
Capillary Height Used in Calculation 6"
Final Solids Volume 400.8 Kgal
Final Average flow rate 0.09 gpm
Porosity 0.17 & 0.24 (assumed)
Supernatant Volume Remaining 0 Kgal
Drainable Interstitial Liquid 41.6 Kgal
Drainable Liquid Remaining 41.6 Kgal
Pumpable Liquid Remaining 36.6 Kgal

[X] Justification letter attached (Interim Stabilization System Engineer):

Disposition of Tank:

[x] Tank Interim Stabilized
[ ] Tank Not Interim Stabilized; Re-start Pumping

Evaluation prepared by Retrieval/Closure System Engineer: SL Swaney Date 5/18/2005

Closure Projects Engineering Support Process Engineer: L.M. Sasaki Date 5/18/05
(C-Farm Project Engineering)

APPROVED BY:

Manager, Retrieval/Closure System Engineering DG BAIDE Date 5-18-05

Manager, Closure Projects Engineering Support MJ SUTEY Date 5/18/05

Single-Shell Tank Interim Stabilization Evaluation Form (cont.)

EVALUATION CALCULATIONS AND COMMENTS:

TANK: **241-S-111**

OBJECTIVE/PURPOSE:

This Single-Shell Tank Interim Stabilization Evaluation provides the data and supporting calculations involved in declaring single-shell waste storage tank 241-S-111 interim stabilized. The criteria to declare 100-series jet-pumped single-shell waste storage tanks to be interim stabilized are: 1) the tank contains less than 50,000 gallons of drainable interstitial liquid (DIL), 2) the tank contains less than 5,000 gallons of supernatant, and 3) the measured maximum pump-out or in-flow rate is less than 0.05 gallons per minute. In the event of major equipment failure, Criteria 3 may be waived with a letter of justification and management approval.

ANALYSIS METHOD:

The analysis method used for this evaluation relied upon the criteria and equations established in HNF-2978, Rev. 5, *Updated Pumpable Liquid Volume Estimates and Jet Pump Durations for Interim Stabilization of Remaining Single-Shell Tanks*. Calculations presented will utilize the LOW basis method. See the **Calculations** section for equation definitions.

This evaluation follows the applicable guidelines of the *Engineering Calculations* procedure, TFC-ENG-DESIGN-C-10, Rev. A-8, and the technical basis and formatting requirements of *Single-Shell Tank Interim Stabilization Evaluation* procedure, TFC-ENG-CHEM-P-15, Rev. B-1. When complete, this evaluation will be formally released as part of a direct revision to HNF-SD-RE-TI-178, *Single-Shell Tank Leak Stabilization Record.*

TANK WASTE DESCRIPTION:

Per Interoffice Memo 7G330-LMS-03-007, saltwell pumping yielded 98,586 gallons of net waste from 241-S-111, while using 18,094 gallons of water for pump flushes. No dilution water was used for pumping of tank 241-S-111.

The following description was obtained by in-tank video taken 03/02/04. The outer 10' diameter of 241-S-111 is a yellow flaky dry saltcake. The remainder of the waste is a smooth, brownish saltcake with varying colors and irregular patches of white salt crystals that were created as the waste was dried out by saltwell pumping. The waste surface appears to be dry with evidence of cracking and shows no standing water upon the waste surface. The ENRAF plummet is shown located approximately 2" below the main waste surface level in a small depression and reads 155.06 inches (taken on 03/02/04). Therefore, 157.1 inches (155 inches plus 2 inch depression) will be used as the waste surface level.

Currently, liquid observation well (LOW) readings indicate an ILL of 86.2 inches (taken 05/10/05). Dip tube readings were obtained by work package WS-04-0568 and through the saltwell Operator Control System (OCS). The most recent (3/15/04) dip tube level adjusted for the dip tube offset of 6.75 inches and assuming a zero inch capillary height is 66.97 inches. The dip tube level is a direct reading and not affected by variations in porosity and capillary attractions, however, the LOW reading will be used for calculating the final volumes within 241-S-111 since the most recent dip tube reading is over one year old. All reported levels are based on the centerline of the tank's dished bottom. Calculations do not take into account any retained gas within the waste.

Evaluation Prepared by _____ Date 5/18/2K5

Evaluation Checked by _____ Date 5/18/05

Single-Shell Tank Interim Stabilization Evaluation Form (cont.)

EVALUATION CALCULATIONS AND COMMENTS:

TANK: **241-S-111**

INPUT DATA & ASSUMPTIONS

Initial Liquid Level at Start of Pumping (ENRAF – 12/17/01) = 204.2 inches ~ 204.2 inches

ENRAF Reading from video evaluation (03/02/04) = 155.06 inches ~ 155.1 inches

Final ENRAF Reading (05/12/05) = 154.09 inches ~ 154.1 inches

Final Liquid Observation Well (LOW) Reading (05/10/05) = 86.232 inches ~ 86.2 inches

Final Dip Tube Reading from WS-04-0568 & OCS (03/15/04) = 60.22 inches ~ 60.22 inches

Dip Tube Offset (Distance of lowest dip tube leg from tank bottom) = 6.75 inches

Final Adjusted Dip Tube Level = 60.22 inches + 6.75 inches = 66.97 inches ~ 67.0 inches

Capillary Height (based on LOW and saltcake bases) = 6 inches *

Sludge Volume = (288 KL) 76,082 gallons ***

Height of Sludge Layer (76.1 Kgal) above bottom ~ 36.7 inches**

Tank Dished Bottom Volume (Lower 12" Height) = 13,378 gallons **

Unpumpable Liquid Height Constant = 18 inches *

Assumed Saltcake Porosity = 24% *

Assumed Sludge Porosity = 17% *

For 100-series (75' dia.) tanks (500, 750, and 1000K gallon SSTs), 1 inch equals approximately 2750 gallons when above the dish bottom. *

*Reference HNF-2978, Rev. 5
**Reference RPP-13019, Rev. 0
***Twins Database query 05/03/05

EQUATIONS

D.I.L. = Drainable Interstitial Liquid *
= {[Final LOW Level – Sludge Height – Capillary Height] * 2750 gal/in} *
Assumed porosity (saltcake) + (Sludge Volume) * assumed sludge porosity

D.L.R. = Drainable Liquid Remaining *
= D.I.L. + supernatant volume

P.L.R. = Pumpable Liquid Remaining *
= D.L.R. – [((Unpump. Ht – 12.0") * 2750 gal/in + Dish Vol.) * assumed sludge porosity]

*Reference HNF-2978, Rev. 5

Evaluation Prepared by _____ Date 5/18/2K5

Evaluation Checked by _____ Date 5/18/05

Single-Shell Tank Interim Stabilization Evaluation Form (cont.)

EVALUATION CALCULATIONS AND COMMENTS:

TANK: **241-S-111**

RESULTS/CALCULATIONS

POROSITY:

The assumed values for saltcake (24%) and sludge (17%) will be used for final drainable volume calculations as the divergence point of the LOW and ENRAF readings was not obtained. The divergence point typically seen in saltwell pumping is defined as the point at which the ENRAF reading stays nearly constant while the LOW (ILL) readings drop in proportion to the volume of liquid waste being removed from the tank during pumping. Data review shows that the slow nature of waste pumping from 241-S-111, due to restricted transfer lines, made it impossible to determine the actual point of divergence.

LOW BASIS:

DIL = [(86.2" – 36.7" – 6.0") * 2750 gal/inch] * 0.24 + (76,082 gal * 0.17)

= [(119,625) * 0.24] + (76,082 * 0.17) = 28,710 + 12,934 gal = 41,644 gallons (41.6 Kgal)

DLR = DIL + Supernatant = 41,644 gallons + 0 gallons = 41,644 gallons (41.6 Kgal)

PLR = DLR – [((18.0" – 12.0") * 2750 gal/inch + 13,378 gal) * 0.17]

= DLR – [(16,500 gal + 13,378 gal) * 0.17]

= 41,644 gal – 5,079 gal = 36,565 gallons (36.6 Kgal)

SOLIDS VOLUME:

The following description was obtained by review of the in-tank video taken 03/02/04. The ENRAF level from 03/02/04 (closest reading to the video) was 155.1 inches. The video revealed the plummet to be within a 2" depression, therefore 157.1 inches will be used for the solids volume estimate. All estimates regarding waste dimensions were obtained by comparison with known dimensions of installed in-tank equipment and drawing D-2, Rev. 6, *Half Section at Centerline of 75 ft. Tank* from Project 9536, PO # 1451-1/2. The upper waste surface is a yellow flaky dry saltcake formed around the outer 10' diameter of the tank. Three rings are visible on the outer edge of the tank one at the waste level and two above. The remaining surface of the solid waste appears to be flat with black, dry, and rough characteristics (assumed smooth and flat for the majority of the tank). A cone frustum centered on the saltwell screen forming an approximate 30' diameter base at the upper waste level. The lower base of the frustum is a 20 foot diameter surface and is approximately 3 feet below the surface level. A cylindrical depression is located around the LOW at a depth of 3 feet with a 5 foot diameter. Supernatant visible volume is zero gallons.

Per the Best Basis Inventory (BBI) located in the TWINS database; the sludge volume of 241-S-111 is 76.1 Kgal (36.7 inches). For reporting purposes, the total quantity of solids in the tank will be calculated and the sludge volume will be subtracted from this total. All volumes are rounded to the nearest whole gallon. This volume difference will then be the reported quantity of saltcake in 241-S-111. For this calculation the saltcake and sludge solids volumes include the interstitial liquid but do not include any supernatant liquid.

Evaluation Prepared by _____ Date 5/18/2K5

Evaluation Checked by _____ Date 5/18/05

Single-Shell Tank Interim Stabilization Evaluation Form (cont.)

EVALUATION CALCULATIONS AND COMMENTS:

TANK: **241-S-111**

RESULTS/CALCULATIONS (cont.)

SOLIDS VOLUME (cont.):

The saltwell screen is positioned in the center of the tank. For the purpose of this evaluation, the solids volume will include an evaluation of the tank upper surface volume (minus the conical shaped depression) and the dish volume. See SOLIDS CALCULATION FIGURE. These volumes are then added together to obtain the total volume as follows:

SOLIDS CALCULATION FIGURE (not to scale)

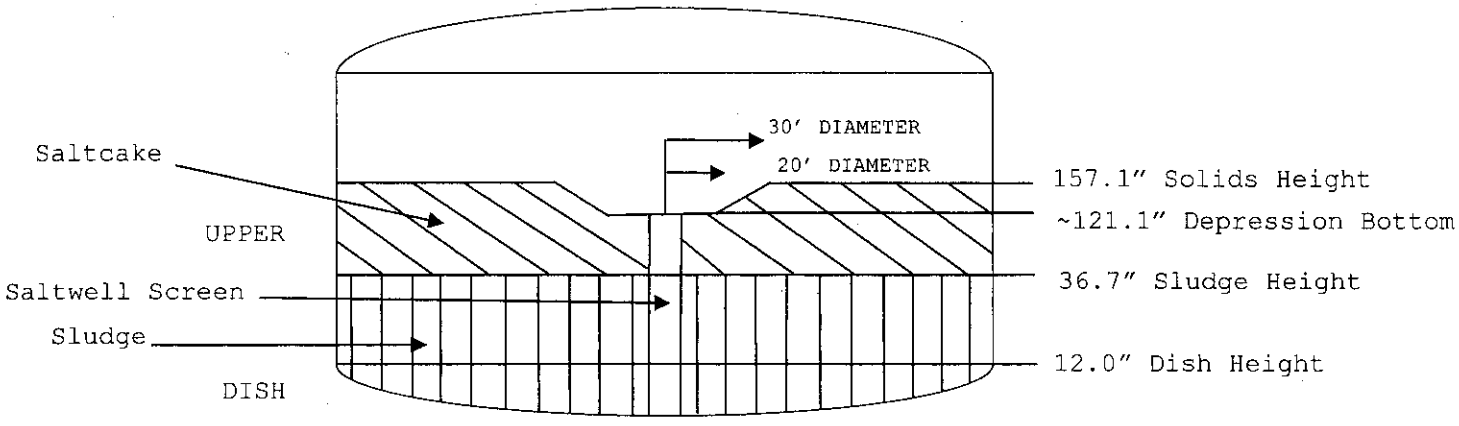

Volume = [Vol. (157.1"–12.0")* 2750 gal/in + Vol. of 12.0" (Dish Volume)] – Vol. (cone frustum)

(Where the right circular cone frustum volume is = (pi * H/3 * (r^2 + R * r + R^2)* 7.481 gal/ft^3

Volume (Upper) = [Vol. of (157.1"–12.0") * 2750 gal/in]) = 399,025 gallons

Volume (cone frustum) = pi*(r^2 + R * r + R^2) * H/3 * 7.481 gal/ft^3 =

= pi * ((10 ft)^2 + 10ft * 15ft + (15 ft)^2) * (3 ft)/3 * 7.481= 11,164 gallons

Volume (LOW depression) = pi*h*r^2 * 7.481 = 3.14*3*(2.5)^2 * 7.481 = 441 gallons

Volume (Upper) = 399,025 gallons - 11,164 gallons - 441 gallons = 387,420 gallons

Volume (Dish) = 13,378 gallons

Volume (Tot) gallons = 387,420 gallons + 13,378 gallons = 400,798 gallons = 400.8 Kgal

Volume Saltcake = Vol (Tot) – Vol (Sludge) = 400,798 gal - 76,082 gal = 324,716 gal = 324.7 Kgal

Evaluation Prepared by _____ Date 5/18/2K5

Evaluation Checked by _____ Date 5/18/05

Single-Shell Tank Interim Stabilization Evaluation Form (cont.)

EVALUATION CALCULATIONS AND COMMENTS:

TANK: **241-S-111**

RESULTS/CALCULATIONS (cont.)

FLOW DATA:

Although the pumping rate had approached 0.05 gpm several times during the pumping history, it did not meet the interim stabilization criteria. When pumping was stopped on October 8, 2003, the pumping rate was approximately 0.17 gpm. The pumping rate was nearing stabilization requirements when the pump motor failed. Subsequent efforts to restart the pump and transfer were unsuccessful. It was determined via field tests that the pump was no longer operable.

The final pumping flow rates were found by data obtained from operating procedure TO-420-111, Rev. C-11 from October 4, 2003 to October 7, 2003. These dates were identified as the last stable operating times for 241-S-111. Pumping was sporadic from October 7, 2003 until October 8, 2003 when the pump failed. During this time frame pumping rates below 0.1 gpm were recorded on three separate occasions.

October 6th and 7th, 2003 (2047 (10/6) to 0200 (10/7))

Pumping Rate = 27 gallons / (5.22 hrs * 60) minutes = 0.086 gpm (0.09 gpm)

October 5th, 2003 (0200 to 2000 hours)

Pumping Rate = 96 gallons / (18 hrs * 60) minutes = 0.088 gpm (0.09 gpm)

October 4th, 2003 (0200 to 2000 hours)

Pumping Rate = 101 gallons / (18 hrs * 60) minutes = 0.094 gpm (0.09 gpm)

The flow rates exceed the minimum stabilization flow rate of 0.05 gallons per minute. Therefore, a flow rate of 0.09 gallons per minute will be used in the letter of justification for major equipment failure to calculate expected pumping durations and water usage if pumping of 241-S-111 is restarted.

SOFTWARE: None.

Evaluation Prepared by [signature] Date 5/18/2K5

Evaluation Checked by [signature] Date 5/18/05

Single-Shell Tank Interim Stabilization Evaluation Form (cont.)

EVALUATION CALCULATIONS AND COMMENTS:

TANK: **241-S-111**

REFERENCES:

TO-420-111, Rev. A-0 through C-11, *Perform 241-S-111 Saltwell Pumping.*

Drawing D-2, Rev. 6, *Half Section at Centerline of 75 ft. Tank* from Project 9536, PO # 1451-1/2

HNF-2978, Rev. 5, *Updated Pumpable Liquid Volume Estimates and Jet Pump Durations for Interim Stabilization of Remaining Single-Shell Tanks.*

RPP-13019, Rev. 0, *Determination of Hanford Tank Waste Volumes.*

HNF-SD-RE-TI-178, Rev. 8, *Single-Shell Tank Leak Stabilization Record.*

TFC-ENG-DESIGN-C-10, REV A-8, *Engineering Calculations.*

TFC-ENG-CHEM-P-15, Rev B-1, *Single Shell Tank Interim Stabilization Evaluation.*

WS-04-0568, *241-G Weight Factor and Specific Gravity Readings.*

7G330-LMS-03-007, *October 2003 Saltwell Pumping Volume.*

7G320-DGB-05-003, *Justification for Declaring 241-S-111 Interim Stabilized, Due to Major Equipment Failure.*

Tank Waste Information System (TWINS) 2005, *queried May 3*, 2005, [Best Basis Inventory], Hanford intranet at http://twins.pnl.gov/twins.htm

Pumpchrts_PE.xls, Excel log of saltwell pumping history from server \\ap012\dpu\pumpchartsPE.

CONCLUSIONS/RECOMMENDATIONS:

241-S-111 has met the applicable criteria for declaration of interim stabilization under the provisions for major equipment failure, due to the blockage of the transfer line. See Page 1 for summary and final tank disposition/approvals and letter 7G320-DGB-05-003 "Justification for declaring 241-S-111 interim stabilized, due to major equipment failure."

ATTACHMENTS:

All record attachments, raw data, and calculations for this evaluation, as well as other information may be found in the tank history file maintained by Interim Stabilization Engineering, per the requirements TFC-ENG-CHEM-P-15, section 4.2.1.19.

Evaluation Prepared by _____ Date 5/18/2K5

Evaluation Checked by _____ Date 5/18/05

INTEROFFICE MEMO

From:	Retrieval/Closure System Engineering	7G320-DGB-05-003
Phone:	376-3274 S7-24	
Date:	May 18, 2005	
Subject:	JUSTIFICATION FOR DECLARING 241-S-111 INTERIM STABILIZED, DUE TO MAJOR EQUIPMENT FAILURE	

To: T. L. Hissong S7-83

Copies:	W. B. Barton	S7-70	L. M. Sasaki	S7-90
	J. S. Boettger	S7-24	D. J. Saueressig	S7-67
	J. W. Cammann	S7-83	M. J. Sutey	S7-70
	J. N. Doeler	S7-24	S. L. Swaney	S7-67
	R. A. Dodd	S7-83	DGB File/LB	
	M. R. Koch	S7-83		

Saltwell pumping of Tank 241-S-111 began on December 18, 2001, and continued until October 8, 2003, when the saltwell jet pump seized due to a suspected bearing fracture and subsequent motor shaft failure. A total of 98,586 gallons of liquid waste was transferred to 241-SY-102 before the failure occurred. Waste volume calculations show 41,600 gallons of drainable interstitial liquid remaining in the tank, of which 36,600 gallons is estimated to be pumpable. Video observation reveals there is no supernatant liquid remaining. TFC-ENG-CHEM-P-15, Revision B-1, *Single-Shell Tank Interim Stabilization Evaluation,* requires a jet pumped waste tank contain less than 50,000 gallons of drainable interstitial liquid, less than 5000 gallons of supernatant liquid, and achieve a maximum pump out or in-flow rate of 0.05 gallons per minute (gpm) for interim stabilization. However, a single-shell waste tank can be declared interim stabilized by major equipment failure by meeting the drainable interstitial liquid and supernatant quantities, but without meeting the 0.05 gpm criteria. Tank 241-S-111 meets the criteria for interim stabilization due to major equipment failure.

The hydraulic properties and pumping history of waste tanks in S-Farm are similar and indicate that achieving zero pumpable liquid in 241-S-111 is not likely. A quantitative assessment of predicted pumpable liquid remaining was performed per RPP-12324 "Interim Stabilization Calculations: Pumpable Liquid Remaining." Table 3-3 of this document specifies the predicted quantity of pumpable liquid that will remain once the stabilization criteria have been fulfilled. The predicted pumpable liquid remaining for 241-S-111 is 37,000 gallons. If the 241-S-111 saltwell pump was replaced and restarted, the remaining pumpable volume of the tank will be the difference between 36,600 gallons and 37,000 gallons. Since the difference is a negative value, an assumed volume of 5,000 gallons will be used as the remaining pumpable volume for the following calculations in this evaluation.

If repairs at 241-S-111 were completed, the time to pump the remaining liquid from the tank is dependent upon the flow rates of the liquid wastes into the saltwell screen. The current flow rate of liquid into the saltwell screen at 241-S-111 is calculated at 0.09 gpm, or 130 gallons per day (gpd). By observation, the flow rate of liquid into the saltwell screen will decrease and approach 0.05 gpm (72 gpd) as the interstitial liquid level drops. Therefore, to determine the estimated time to pump 241-S-111, an average rate of 0.07 gpm (101 gpd) at 50% operating efficiency is assumed. Using this rate and efficiency, the time to remove the remaining pumpable liquid of 5,000 gallons from tank 241-S-111 is approximately 14 weeks.

Over this 14-week period, numerous system and transfer line flushes would be required to prevent the typical plugging seen with saltwell transfer systems. The transfer line hold up volume of 143 gallons necessitates frequent flushes. For example, from October 1, 2003, to October 8, 2003, a total of 890 gallons of flush water were required to maintain the transfer system operable. During this time a total of 891 gallons of waste was pumped. If pumping was restarted and similar flush volumes were required for operability, an additional 12,460 gallons would be added to the waste stream to remove the estimated 5,000 gallons of liquid from 241-S-111.

To facilitate the replacement of the failed jet pump, the pump pit cover plate at 241-S-111 would have to be removed and workers would be required to work over the open pit. Before the pump assembly can be replaced, extensive preparation of the pump pit is required to minimize the spread of contamination. A report from the Radiological Control planner on a similar pump replacement (exposure estimate for U-111 saltwell replacement) details the level of radiation exposure for each member of the field crew performing the job. The work to prepare the pump pit and replace the pump assembly would result in a dose exposure estimated to be 922 mrem for the job.

Costs for repair and continued operation of 241-S-111 are based on Single-Shell Tank Interim Stabilization, Revision 3, Working Schedule Baseline. It is estimated that it would cost $147,400 to replace the equipment, conduct an operability check of the transfer line, and meet waste disposal costs at 241-S-111. If repairs were made and pumping was restarted, the project expenses to replace, calibrate, and maintain the current equipment at 241-S-111 for the projected 14-week pumping schedule is estimated to cost $96,300. Additionally, an annual waste profile costing $9,300 is required for the restart of 241-S-111. Since no further tanks are being pumped in S-complex, separate personnel are required to staff S-111 pumping operations thereby adding personnel and training costs associated with continued pumping. These training costs combined with costs to restart the pumping system, re-qualify the HIHTL for continued use, and work package planning/SME review resources adds an estimated $390,600 to the project cost. The total project cost for restart and continued operation is $643,600.

Based upon these evaluations of ALARA principles, remaining pumpable liquid, generation of excess wastes, and cost concerns, it is recommended that tank 241-S-111 be declared interim stabilized on the basis of major equipment failure as defined by TFC-ENG-CHEM-P-15, Revision B-1, *Single-Shell Tank Interim Stabilization Evaluation.*

If you have any questions, please call me on 376-3274, or Mr. S. L. Swaney on 373-3472.

D G Baide

D. G. Baide, Manager
Retrieval/Closure System Engineering

Concurrence: M. R. Koch, Director, Retrieval/Closure Engineering

Signature Michael R Koch Date 5-18-05

SLS/ad

SINGLE-SHELL TANK INTERIM STABILIZATION EVALUATION FORM

TANK: 241-S-112

Reason for Stopping Pumping: (Jet pumping Only)

- ☐ Meets 0.05 gpm criteria, Date of Shutdown N/A
- ☐ Major equipment failure, Date of Shutdown N/A

Tank Waste Surface Level Condition and Comments: See description on Page 2.

Evaluation: (See continuation page for calculations and additional comments)

Photo/video review completed - Date of most recent photo/video: 6/20/05

☒ Tank history, temperature profile and intrusion reviews completed and no anomalies identified

Starting Liquid Level	127.5"	Method	LOW	Date	9/18/02
Final Liquid Level	16.4"	Method	ENRAF	Date	6/20/05
Total Net Pumped Volume		582.9 kgal			
Capillary Height Used in Calculation		Not Applicable			
Final Solids Volume		29.0 kgal			
Final Average Flow Rate		Not Applicable			
Calculated Porosity		0.24 & 0.17 (assumed)			
Supernatant Volume Remaining		2,035			
Drainable Interstitial Liquid		6.5 kgal			
Drainable Liquid Remaining		8.6 kgal			
Pumpable Liquid Remaining		1.8 kgal			

☐ Justification letter attached, Letter Number:

Disposition of Tank:

☒ Tank Interim Stabilized

☐ Tank Not Interim Stabilized; Restart Pumping

Evaluation ~~Prepared~~ Checked By: JN Doeler JN DOELER Date 6/24/05
Retrieval/Closure System Engineer

Evaluation ~~Checked~~ Prepared By: JL Cowin JL COWIN Date 6/24/05
Closure Projects Engineering Support Process Engineer

APPROVED BY:

Manager, Retrieval/Closure System Engineering DG Baide DG BAIDE Date 6-24-05

Manager, Closure Projects Engineering Support MJ Sutey Date 6/24/05

EVALUATION CALCULATIONS AND COMMENTS:

TANK:

OBJECTIVE/PURPOSE:

This Single-Shell Tank Interim Stabilization Evaluation provides the data and supporting calculations involved in declaring single-shell waste storage tank 241-S-112 interim stabilized. The criteria to declare 100-series non-jet-pumped single-shell waste storage tanks to be interim stabilized are: 1) the tank contains less than 50,000 gallons of drainable interstitial liquid (DIL), and 2) the tank contains less than 5,000 gallons of supernatant.

ANALYSIS METHOD:

The analysis method used for this evaluation relied upon the criteria and equations and assumptions established in HNF-2978, Rev. 5, *Updated Pumpable Liquid Volume Estimates and Jet Pump Durations for Interim Stabilization of Remaining Single-Shell Tanks*. Calculations presented will utilize the waste volumes reported by the S-112 process engineer data log located at \\AP012\DPU\SSTStabilization\S-112 and \\AP003\sfarmproj\s-112\shift engineer. Conservative estimated waste volumes are used because normal estimates through video observations and solid waste surface measurements are not practical, as most of the initial S-112 waste has been removed by retrieval operations and the waste surface is not level or uniform. See the **Calculations** section for definitions.

This evaluation follows the applicable guidelines of the *Engineering Calculations* procedure, TFC-ENG-DESIGN-C-10, Rev. A-10, and the technical basis and formatting requirements of *Single-Shell Tank Interim Stabilization Evaluation* procedure, TFC-ENG-CHEM-P-15, Rev. B-1. This evaluation does not utilize the evaluation methodology of TFC-ENG-CHEM-P-47, Rev. A-1. *Single-Shell Tank Retrieval Completion Evaluation,* although the tank is currently undergoing retrieval. When complete, this evaluation will be formally released as part of a direct revision to HNF-SD-RE-TI-178, *Single-Shell Tank Leak Stabilization Record.*

TANK WASTE DESCRIPTION:

The following description was obtained by in-tank video taken 06/20/05 through video observation port located in riser 7. Liquid and solid waste from 241-S-112 has been removed by a combination of saltwell and retrieval pumping operations. Saltwell pumping yielded 7,616 gallons of net waste from 241-S-112, while using 856 gallons of water for pump flushes and 5,044 gallons of water for injection and dilution. Retrieval pumping field estimates yielded 624,000 gallons of net waste from S-112 and used 1,226 kgal of water for pump flushes and sluicing additions. However, the total volume pumped exceeded the BBI estimate of 614,000. For the purposes of this evaluation, the more conservative BBI estimate of 614,000 gallons is used as the total waste pumped during retrieval. At the completion of retrieval activities the final reported waste volumes will be determined by using the volume displacement methods based on ENRAF readings and transfer volumes. This method establishes a liquid surface and measures the associated volume by ENRAF then subtracts any volume transferred from the tank.

The waste of 241-S-112 appears as a light yellow, sludge type waste with an irregular surface that was created as the waste was removed by sluicing and pumping. The waste surface appears to be solids except for a small circular pool surrounding the retrieval pump and a shallow wedge shaped pool that extend from the pump inlet to the tank wall. The circular pool

Evaluation Preparer: JL Cowin Date 6/24/05

Evaluation Checker: JN DOELER Date 6/24/05

EVALUATION CALCULATIONS AND COMMENTS:

TANK:

(~3 foot diameter) is contained within a slight depression in the waste surface and is assumed to be symmetrical to the bottom of the tank's dish. The wedge shaped pool is contained within a slight depression in the waste surface and is estimated to be 4" deep and have a width of approximately 65°. The ENRAF plummet is located within a stilling well and reads 16.4 inches. For the purposes of this evaluation, the liquid level visible during the video will conservatively be assumed to be 16.4 inches. The waste surface at the tank sidewalls is approximately 20 - 22 inches based on a partially visible sidewall knuckle. The waste surface varies across the diameter of the tank as most of the original waste volume has been removed by retrieval operations. All reported levels are based on the centerline of the tank's dished bottom. Calculations do not take into account any retained gas within the waste.

INPUT DATA & ASSUMPTIONS

Initial Liquid Level at Start of Pumping (LOW – 09/18/02) = 127.55 inches ~ 127.6 inches

Final ENRAF Reading (6/20/05) = 16.4 inches ~ 16.4 inches

Saltwell Net Waste Pumped (09/21/02 to 10/10/02 on \\AP012\DPU) = 7,616 gal = 7.6 Kgal

Retrieval Water Usage Volume (from \\AP003\sfarmproj\S-112) = 1,226 Kgal

Sludge Volume = 6,080 gallons **

Tank Dished Bottom Volume (Lower 12" Height) = 13,378 gallons ***

Unpumpable Height = 18 inches *

Assumed Saltcake Porosity = 24% *

Assumed Sludge Porosity = 17% *

For 100-series (75' dia.) tanks (500, 750, and 1000K gallon SSTs), 1 inch equals 2754 gallons
when above the dish bottom. ***

*Reference HNF-2978, Rev. 5
**Reference BBI query 06/20/05
***Reference HNF-13019, Rev. 0
****S-112 Daily Report for 5/17/05

Evaluation Preparer: Jennifer L Cowin JL Cowin Date 6/24/05

Evaluation Checker: JN Doeler JN DOELER Date 6/24/05

EVALUATION CALCULATIONS AND COMMENTS:

TANK:

Discussion

SUPERNATANT LIQUID VOLUME

There appears to be a small circular pool around the retrieval pump conservatively estimated to be 3 feet in diameter and a wedge shaped pool that extends from the pump inlet to the tank wall. The circular pool is estimated to be a right circular cylinder with a 16.4-inch depth. The wedge shaped pool is estimated to extend 65° with a 4-inch depth. The dish curvature of the tank bottom will be ignored for conservatism. For the purposes of this evaluation, the ILL (ENRAF level) will be considered the level of the visible liquid pool and the resultant liquid volume will be considered the total supernatant volume for the tank. The 16.4" ILL height is known to be conservative as the pump column is notably lower than the solids level at the ENRAF. Brine was observed to flow towards the pump column (away from the ENRAF) during pump draw down. The supernatant is calculated as the sum of the volume of these two pools.

Supernatant = 65°/360° * pi * radius ^2 * h + pi * radius ^2 * h
= (.18) * pi * (37.5') ^2 * 4"/12 inches/ft * 7.481 gal/ft + pi * (1.5') ^2 * 16.4"/12 inches/ft * 7.481 gal/ft
= 2035 gallons

SOLIDS VOLUME:

The following description was obtained by review of the in-tank video taken 06/20/05. The ENRAF level during the video was 16.4 inches. The waste level at the tank sidewall is estimated to be 20-22 inches nominally across the tank diameter. All estimates regarding waste dimensions were obtained by comparison with known dimensions of installed in-tank equipment and drawing H-2-1783, sht. 1, Rev. 3. The surface of the solid waste is uneven and pitched towards the pump column due to retrieval operations. A simple calculation based on surface level measurements is not practical due to the surface features of the remaining waste. However, the total waste remaining in S-112 was calculated from observations and volumes of the last transfer from the tank.

Prior to the last transfer from S-112 on 5/17/2005 a review of tank video showed that most of the waste surface was covered by liquid with an estimated 500 gallons of waste above the liquid surface. The beginning surface level was 22.18 inches. Using the RPP-13019 tank volume calculator this equates to 38,022 gallons.

During the transfer on 5/17/2005, 1014 gallons of water were added to the tank and 8436 gallons were transferred to SY-102.

The remaining total volume in S-112 is estimated to be:
= 38022 + 500 + 1014 – 8436 gallons
= 31,100 gallons (31 kgal)

The total solids volumes is:
=31 kgal – 2 kgal
=29 kgal

Evaluation Preparer: JL Cowin Date 6/24/05

Evaluation Checker: JN Doeler Date 6/24/05

EVALUATION CALCULATIONS AND COMMENTS:

TANK:

The total volume of waste remaining is the sum of the supernatant liquid, the saltcake and the sludge. For the solids volume calculation the saltcake and sludge solids volumes include the interstitial liquid but no supernatant liquid. Per BBI located in the TWINS database; the sludge volume of 241-S-112 is 6.08 Kgal.

SALTCAKE WASTE VOLUME

The saltcake waste is the total waste minus the sludge and the supernatant liquid.

Saltcake volume = Total waste volume – supernatant liquid – sludge.
= 31,000 - 6080 – 2035 gallons
= 22,885 gallons (23 kgal)

The saltcake volume calculation includes the interstitial liquid.

NOTE: The retrieval of 241-S-112 has reached the limit of the deployed saltcake dissolution technology. It is expected that retrieval will resume after a new technology is deployed and will continue until all practical solid waste has been removed from the tank to meet the requirements of TFC-ENG-CHEM-P-47 *Single-Shell Tank Retrieval Completion Evaluation.* The volumes reported within this evaluation are as of June 20, 2005 and will only reflect those totals retrieved prior to the video examination to determine if the criteria for Interim Stabilization had been satisfied.

EQUATIONS

Retrieval Net Waste Pumped = Initial BBI volume – Remaining S-112 volume
Total New Waste Removed =Saltwell Net Waste Pumped –Retrieval Net Waste Pumped
Remaining Volume of Saltcake = Remaining S-112 volume – Sludge volume (BBI estimate)

D.I.L. = Drainable Interstitial Liquid
= Remaining Volume of Saltcake * (assumed saltcake porosity) + Sludge Volume * (assumed sludge porosity)

D.L.R. = Drainable Liquid Remaining
= D.I.L. + supernatant volume

P.L.R. = Pumpable Liquid Remaining *
= D.L.R. – [((Unpump. Ht – 12") * 2754 gal/in + (Dish Volume – Sludge Volume)) * (assumed saltcake porosity) + Sludge Volume * (assumed sludge porosity)]

*Reference HNF-2978, Rev. 5
**Reference BBI query 06/20/05
***Reference HNF-13019, Rev. 0
****S-112 Daily Report for 5/17/05

Evaluation Preparer: SL Cowin Date 6/24/05

Evaluation Checker: JN DOELER Date 6/24/05

SINGLE-SHELL TANK INTERIM STABILIZATION EVALUATION FORM (Cont.)

EVALUATION CALCULATIONS AND COMMENTS:

TANK:

RESULTS/CALCULATIONS

MBD BASIS:

Retrieval Net Waste Pumped = 614 kgal – 31 kgal = 583 kgal
Remaining Volume of Saltcake = 31.0 Kgal – 6.08 Kgal - 2.0 Kgal = 23.0 Kgal

DIL = [23.0 Kgal * 0.24 + 6.08 Kgal * 0.17]

= [5,520 gal + 1,034 gal] = 6,554 gallons (6.5 Kgal)

DLR = DIL + Supernatant = 6,554 gallons + 2,035 gallons = 8,589 gallons (8.6 Kgal)

PLR = DLR – [((18" – 12") * 2754 gal/in + (13,378 gal – 6,080 gal)) * 0.24 + 6,080 gal * 0.17]

= 8,589 gal – [(16,524 gal + 7,298 gal) * 0.24 + 6,080 gal * 0.17]

= 8,589 – [5,717 gal + 1,034 gal] = 8,589 gal – 6,751 gal =1838 gal = (1.8 Kgal)

FLOW DATA:

The final pump flow rate is not applicable to this stabilization evaluation as the tank was pumped using a positive displacement pump, not a jet-pump. The 0.05 a gpm criterion applies only to jet pumped tanks.

SOFTWARE: None.

Evaluation Preparer: JL Cowin Date 6/24/05

Evaluation Checker: JN DOELER Date 6/24/05

EVALUATION CALCULATIONS AND COMMENTS:

TANK:

REFERENCES:

H-2-1783, Sht. 1, Rev. 3, *75 ft. Composite Storage Tanks Sections.*

HNF-2978, Rev. 5, *Updated Pumpable Liquid Volume Estimates and Jet Pump Durations for Interim Stabilization of Remaining Single-Shell Tanks.*

TFC-ENG-DESIGN-C-10, Rev. A-10, *Engineering Calculations.*

TFC-ENG-CHEM-P-47, Rev. A-1, *Single-Shell Tank Retrieval Completion Evaluation*

TFC-ENG-CHEM-P-15, Rev. B-1, *Single-Shell Tank Interim Stabilization Evaluation* procedure.

HNF-SD-RE-TI-178, Rev. 8, *Single-Shell Tank Leak Stabilization Record.*

Tank Waste Information System (TWINS) 2004, *queried June 20*, 2005, [posted Tank Integrity Reports], Hanford intranet at http://twinswhse.pnl.gov/

Waste Transfer Estimator 04-07-2004.xls, log of retrieval pumping from \\AP003\sfarmproj\s112

CONCLUSIONS/RECOMMENDATIONS:

241-S-112 has met the criteria for declaration of interim stabilization. See Page 1 for summary and final tank disposition data.

ATTACHMENTS:

All record attachments, raw data, and calculations for this evaluation, as well as other information may be found in the tank history file maintained by Retrieval Closure System Engineering, per the requirements TFC-ENG-CHEM-P-15, Rev. B-1, section 4.2.19.

Evaluation Preparer: SL Cowan Date 6/24/05

Evaluation Checker: JN Doeler JN DOELER Date 6/24/05

Single-Shell Tank Interim Stabilization Evaluation Form

TANK: **241-SX-101**

(Jet Pumping only) Reason for stopping jet pumping:

[x] Meets 0.05 gpm criteria, Date of Shutdown ____05/14/03_____

[ ] Major equipment failure, Date of Shutdown _____

Tank Waste Surface Level Condition and Comments: _____ SEE DESCRIPTION PAGE 2 _____

Evaluation: (See continuation page for calculations and additional comments)

Photo/video review completed - Date of most recent photo/video _____08/06/03_____

[x] Tank history, temperature profile and intrusion reviews completed and no anomalies identified

Starting Liquid Level ___ 166.8" _____ Method _____ENRAF_____ Date ___11/21/00___
Final liquid level _____ 120.3"_____ Method _____LOW_____ Date ___08/05/03___
Total Net Pumped Volume ____33.0 Kgal____
Capillary Height Used in Calculation ___6"____
Final Solids Volume _____418.4 Kgal_____
Final Average flow rate _____0.039 gpm____
Calculated Porosity _____0.128_____
Supernatant Volume Remaining ___78 gal ___
Drainable Interstitial Liquid _____43.4 Kgal____
Drainable Liquid Remaining ____43.5 Kgal____
Pumpable Liquid Remaining ____38.9 Kgal____

[ ] Justification letter attached (Interim Stabilization System Engineer):

Disposition of Tank:

[x] Tank Interim Stabilized
[ ] Tank Not Interim Stabilized; Re-start Pumping

Evaluation prepared by Retrieval/Closure System Engineer: _____ Date 8/14/2K3

Closure Projects Engineering Support Process Engineer: _____ Date 8/14/03

APPROVED BY:

Manager, Retrieval/Closure System Engineering _____ Date 8/18/03

Manager, Closure Projects Engineering Support _____ Date 8/14/03

Manager, SST System Engineering _____ Date 8/14/03

EVALUATION CALCULATIONS AND COMMENTS:

TANK: **241-SX-101**

OBJECTIVE/PURPOSE:

This Single-Shell Tank Interim Stabilization Evaluation provides the data and supporting calculations involved in declaring single-shell waste storage tank 241-SX-101 interim stabilized. The criteria to declare 100-series jet-pumped single-shell waste storage tanks to be interim stabilized are: 1) the tank contains less than 50,000 gallons of drainable interstitial liquid (DIL), 2) the tank contains less than 5,000 gallons of supernatant, and 3) the measured maximum pump-out or in-flow rate is less than 0.05 gallons per minute. In the event of major equipment failure, Criteria 3 may be waived with a letter of justification and management approval.

ANALYSIS METHOD:

The analysis method used for this evaluation relied upon the criteria and equations established in HNF-2978, Rev. 5, *Updated Pumpable Liquid Volume Estimates and Jet Pump Durations for Interim Stabilization of Remaining Single-Shell Tanks*. Calculations presented will utilize the LOW basis method. See the **Calculations** section for equation definitions.

This evaluation follows the applicable guidelines of the *Engineering Calculations* procedure, TFC-ENG-DESIGN-C-10, REV A, and the technical basis and formatting requirements of *Tank Farm Facility Interim Stabilization Evaluation* procedure, HNF-IP-0842, Volume IV, Section 4.1. When complete, this evaluation will be formally released as part of a direct revision to HNF-SD-RE-TI-178, *Single-Shell Tank Leak Stabilization Record.*

TANK WASTE DESCRIPTION:

The following description was obtained by in-tank video taken 08/06/03 through the observation port designated riser #19. The waste of 241-SX-101 is a rough, yellowish gray saltcake waste with an irregular surface of visible cracks and shelves that were created as the waste was dried out by saltwell pumping. Saltwell pumping yielded 33,049 gallons of net waste from 241-SX-101, while using 3,649 gallons of water for pump flushes and 47,936 gallons of water for dilution. The waste surface appears to be dry and shows no standing water upon the waste surface. A cylindrical pool (~5 foot diameter) around the saltwell screen shows evidence of apparent supernatant liquid. Upon closer examination, the liquid visible around the saltwell screen is the interstitial liquid level (ILL). The ILL is visible during the video examination due to the camera positioning directly above the waste feature. The ENRAF plummet is located 25 feet from the tank wall (12.5 feet from the tank center) and reads 160.3 inches. The waste surface gradually slopes between 173.0 and 214.0 inches from one side of the tank to the other based on exposed tank wall rings. Between the walls, the waste surface is essentially flat until reaching a cone shaped depression (~15 foot diameter) around the saltwell screen. The 5 foot diameter cylindrical pool is contained within the larger cone shaped depression.

Currently, liquid observation well (LOW) readings indicate an ILL of 120.3 inches. ENRAF readings indicate the surface level is 160.3 inches. Dip tube readings are obtained weekly by work package WS-03-0299. The current (08/12/03) dip tube level adjusted for the dip tube offset of 54.0 inches (dip tubes and saltwell screen were shortened after encountering impermeable waste at this level) and assuming a zero inch capillary height, is 121.8 inches. All reported levels are based on the centerline of the tank's dished bottom. Calculations do not take into account any retained gas within the waste.

Evaluation Prepared by _____ Date 8/14/2K3

Evaluation Checked by _____ Date 8/14/03

Single-Shell Tank Interim Stabilization Evaluation Form (cont.)

EVALUATION CALCULATIONS AND COMMENTS:

TANK: **241-SX-101**

INPUT DATA & ASSUMPTIONS

Initial Liquid Level at Start of Pumping (ENRAF – 11/21/00) = 166.77 inches ~ 166.8 inches

Final ENRAF Reading (08/13/03) = 160.31 inches ~ 160.3 inches

Final Liquid Observation Well (LOW) Reading (08/12/03) = 120.28 inches ~ 120.3 inches

Final Dip Tube Reading from WS-03-0299 (8/12/03) = 67.81 inches ~ 67.8 inches

Dip Tube Offset (Distance of lowest dip tube leg from tank bottom) = 54.0 inches

Final Adjusted Dip Tube Level = 67.81 inches + 54.0 inches = 121.81 inches ~ 121.8 inches

Divergence point = LOW & ENRAF Levels vs. time diverge (supernatant liquid is exhausted)

Divergence point = (based on LOW Level from 12/05/00) = 159.96 inches ~ 160.0 inches

Net Waste Pumped since divergence (use week end 12/10/00 from \\AP012\DPU) = 13,952 gallons

Capillary Height (based on LOW and saltcake bases) = 6 inches *

Sludge Volume = 144,000 gallons *

Height of Sludge Layer (144 Kgal) above bottom ~ 60.5 inches

Tank Dished Bottom Volume (Lower 14.9" Height) = 18,500 gallons *

Unpumpable Liquid Height Constant = 18 inches *

Assumed Sludge Porosity = 17% *

For 100-series (75' dia.) tanks (500, 750, and 1000K gallon SSTs), 1 inch equals 2750 gallons when above the dish bottom. *

EQUATIONS

Drainable Porosity (Saltcake) = Net waste pumped (since 12/05/00)/[(Divergence point – final LOW level)*2750 gal/in]

D.I.L. = Drainable Interstitial Liquid *
= {[Final Adj. LOW Level – Sludge Height – Capillary Height] * 2750 gal/in} * Drainable porosity (saltcake) + (Sludge Volume) * assumed sludge porosity

D.L.R. = Drainable Liquid Remaining *
= D.I.L. + supernatant volume

P.L.R. = Pumpable Liquid Remaining *
= D.L.R.– [((Unpump. Ht – 14.9") * 2750 gal/in + Dish Vol.) * assumed sludge porosity]

*Reference HNF-2978, Rev. 5

Evaluation Prepared by _____ Date 8/14/2003

Evaluation Checked by _____ Date 8/14/03

Single-Shell Tank Interim Stabilization Evaluation Form (cont.)

EVALUATION CALCULATIONS AND COMMENTS:

TANK: **241-SX-101**

RESULTS/CALCULATIONS

POROSITY:

Drainable Porosity (Saltcake) = Net waste pumped (since 12/05/00)/ [(Divergence point – final LOW level)*2750 gal/in]

= (13,952 gallons) / [(160.0" – 120.3") * 2750 gal/in] *100% = 12.8%

LOW BASIS:

DIL = [(120.3" – 60.5" – 6") * 2750 gal/in] * 0.128 + (144,000 gal * 0.17)

= [147,950 * 0.128 + 144,000 gal * 0.17] = 18,938 + 24,480 = 43,418 gallons (43.4 Kgal)

DLR = DIL + Supernatant = 43,418 gallons + 80 gallons = 43,500 gallons (43.5 Kgal)

PLR = DLR – [((18" – 14.9") * 2750 gal/in + 18,500 gal) * 0.17]

= 43,500 gal – [(8,525 gal + 18,500 gal * 0.17)] = 43,500 – [27,025 * 0.17] =

= 43,500 gal – 4,594 gal = 38,906 gal = (38.9 Kgal)

SOLIDS VOLUME:

The following description was obtained by review of the in-tank video taken 08/06/03. The ENRAF level during the video was 160.3 inches and will be used for the solids volume estimate. All estimates regarding waste dimensions were obtained by comparison with known dimensions of installed in-tank equipment and drawing H-2-39511, sht. 1. The surface of the solid waste is assumed smooth and flat for the majority of the tank except for an approximate 15 foot diameter cone shaped depression centered on the saltwell screen. This depression is covered with various deep trough-like cracks and steep shelves due to saltwell pumping. The cone extends down approximately 39 inches to a 5-foot diameter pool around the saltwell screen. Based on elevation estimates, the pool is extrapolated to be 19.2 inches deep. For the purposes of this evaluation, the visible liquid will be considered supernatant and will be calculated using the dip tube level.

Per HNF-2978, Rev. 5 and Best Basis Inventory (BBI) located in the TWINS database; the sludge volume of 241-SX-101 is 144 Kgal. For reporting purposes, the total quantity of solids in the tank will be calculated and the sludge volume will be subtracted from this total. This volume difference will then be the reported quantity of saltcake in 241-SX-101. For this calculation the saltcake and sludge solids volumes include the interstitial liquid but do not include any supernatant liquid.

The saltwell screen is not positioned in the center of the tank, but for the purpose of this analysis and calculations, it is assumed to be in the center. This approximation will have no impact on the volume calculated and will simplify the calculations for subtracting a cone shaped depression. Therefore, for the purpose of this evaluation, the solids volume will include an evaluation of the upper surface (subtracting the cone shaped depression), lower volume and the dish volume. See SOLIDS CALCULATION FIGURE (next page). These volumes are then added together to obtain the total volume as follows:

Evaluation Prepared by _____ Date 8/14/2003

Evaluation Checked by _____ Date 8/14/03

Single-Shell Tank Interim Stabilization Evaluation Form (cont.)

EVALUATION CALCULATIONS AND COMMENTS:

TANK: **241-SX-101**

RESULTS/CALCULATIONS (cont.)

SOLIDS VOLUME (cont):

SOLIDS CALCULATION FIGURE

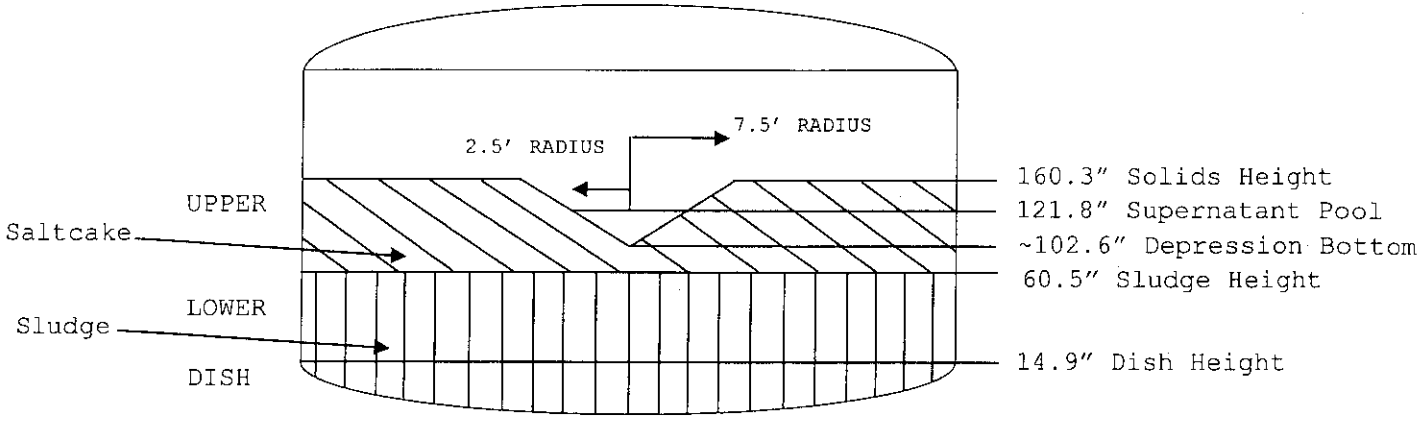

Volume (Upper) = [Vol. of (160.3"–102.6") * 2750 gal/in] – Vol. (right circular cone)

(Where right circular cone volume is = (pi * H/3 * $r^{\wedge 2}$) * 7.481 gal/$ft^{\wedge 3}$

Volume (Upper) = 158,675 gal – [(pi * (4.808 ft/3) * (7.5 ft) $^{\wedge 2}$ * 7.481 gal/ $ft^{\wedge 3}$]

Volume (Upper) = 158,675 gal – 2,119 gal = 156,556 gallons

Volume (Lower) = (102.6" – 14.9") * 2750 gal/in = 241,175 gallons

Volume (Dish) = 18,500 gallons

Volume (Supernatant) = Vol. (right circular cone)

Volume (Supernatant) = [(pi * (1.6 ft/3) * (2.5 ft) $^{\wedge 2}$ * 7.481 gal/ $ft^{\wedge 3}$] = 78 gallons

Volume (Tot) gallons = 158,675 + 241,175 + 18,500 + 78 = 418,428 gallons = 418.4 Kgal

Solids Volume Remaining = Volume (Tot) – Supernatant Liquid

= 418,428 gallons - 78 gallons = 418,350 gallons = 418.4 Kgal

Saltcake Volume remaining = Solids Volume Remaining – Sludge Volume

= 418,350 gallons gals – 144,000 gallons = 274,350 gallons = 272.4 Kgal

Evaluation Prepared by _____ Date 8/14/2003

Evaluation Checked by _____ Date 8/14/03

EVALUATION CALCULATIONS AND COMMENTS:

TANK: **241-SX-101**

RESULTS/CALCULATIONS (cont.)

FLOW DATA:

The final pump flow rate is found by data obtained from operating procedure TO-420-101, Rev. C-4 from 1400 April 26, 2003 to 1400 April 27, 2003 that show a total of 56 gallons of waste pumped over the time period of 1440 minutes (24 hours), while the pump ran in AUTOMATIC mode. This time span was the last stable operating shift of the saltwell pump. During the final month of pumping, 241-SX-101 achieved a net waste flow rate below 0.05 gpm on four separate occasions. Flushes were performed between each occasion to verify flow data. During the final week of pumping, approximately 230 gallons of water was used for pump system piping and saltwell screen flushes. The following equation shows the pumping rate for the final pump run:

Pump Rate = [56 gallons / 1440 minutes] = (0.039 gpm)

SOFTWARE: None.

REFERENCES:

TO-420-101, Rev. A-1 through C-6, *Perform 241-SX-101 Saltwell Pumping.*

H-2-39511, Sht. 1, Rev. 3, *75 ft. Storage Tanks Composite Section Waste Storage Tanks 241-SX*

HNF-2978, Rev. 5, *Updated Pumpable Liquid Volume Estimates and Jet Pump Durations for Interim Stabilization of Remaining Single-Shell Tanks.*

TFC-ENG-DESIGN-C-10, REV A, *Engineering Calculations.*

HNF-IP-0842, Volume IV, Section 4.1, *Tank Farm Facility Interim Stabilization Evaluation*

HNF-SD-RE-TI-178, Rev. 8, *Single-Shell Tank Leak Stabilization Record.*

WS-03-0299, *241-G Weight Factor and Specific Gravity Readings*

Tank Waste Information System (TWINS) 2003, *queried August 11*, 2003, [posted Tank Integrity Reports], Hanford intranet at http://twinswhse.pnl.gov/

Pumpchrts_PE.xls, Excel log of saltwell pumping history from server \\ap012\dpu\pumpchartsPE.

CONCLUSIONS/RECOMMENDATIONS:

241-SX-101 has met the applicable criteria for declaration of interim stabilization. See Page 1 for summary and final tank disposition and approvals.

ATTACHMENTS:

All record attachments, raw data, and calculations for this evaluation, as well as other information may be found in the tank history file maintained by Interim Stabilization Engineering, per the requirements HNF-IP-0842, Vol. 4 Section 4.1, paragraph 3.4.1.

Evaluation Prepared by _____ Date 8/14/2003

Evaluation Checked by _____ Date 8/14/03

Single-Shell Tank Interim Stabilization Evaluation Form

TANK: **241-SX-102**

(Jet Pumping only) Reason for stopping jet pumping:

[ ] Meets 0.05 gpm criteria, Date of Shutdown _____

[x] Major equipment failure, Date of Shutdown _____08/28/03_____

Tank Waste Surface Level Condition and Comments: _____ SEE DESCRIPTION PAGE 2 _____

Evaluation: (See continuation page for calculations and additional comments)

Photo/video review completed - Date of most recent photo/video _____12/10/03_____

[x] Tank history, temperature profile and intrusion reviews completed and no anomalies identified

Starting Liquid Level 190.2" Method ENRAF Date 12/15/01
Final liquid level 68.1" Method Dip Tubes Date 07/05/04
Total Net Pumped Volume 97.6 Kgal
Capillary Height Used in Calculation 0"
Final Solids Volume 341.3 Kgal
Final Average flow rate 0.104 gpm
Porosity 0.17 & 0.24 (assumed)
Supernatant Volume Remaining 0 gal
Drainable Interstitial Liquid 36.2 Kgal
Drainable Liquid Remaining 36.2 Kgal
Pumpable Liquid Remaining 31.3 Kgal

[x] Justification letter attached (Interim Stabilization System Engineer): **7G320-04-MJS.022**

Disposition of Tank:

[x] Tank Interim Stabilized
[ ] Tank Not Interim Stabilized; Re-start Pumping

Evaluation prepared by Retrieval/Closure System Engineer: SL Swaney Date 7/15/2K4

Closure Projects Engineering Support Process Engineer: L.M. Sasaki Date 7/15/04

APPROVED BY:

Manager, Retrieval/Closure System Engineering R S Krogand for M. Lutz Date 7/19/04

Manager, Closure Projects Engineering Support W.T. Thomas Date 7/15/04

EVALUATION CALCULATIONS AND COMMENTS:

TANK: **241-SX-102**

OBJECTIVE/PURPOSE:

This Single-Shell Tank Interim Stabilization Evaluation provides the data and supporting calculations involved in declaring single-shell waste storage tank 241-SX-102 interim stabilized. The criteria to declare 100-series jet-pumped single-shell waste storage tanks to be interim stabilized are: 1) the tank contains less than 50,000 gallons of drainable interstitial liquid (DIL), 2) the tank contains less than 5,000 gallons of supernatant, and 3) the measured maximum pump-out or in-flow rate is less than 0.05 gallons per minute. In the event of major equipment failure, Criteria 3 may be waived with a letter of justification and management approval.

ANALYSIS METHOD:

The analysis method used for this evaluation relied upon the criteria and equations established in HNF-2978, Rev. 5, *Updated Pumpable Liquid Volume Estimates and Jet Pump Durations for Interim Stabilization of Remaining Single-Shell Tanks.* Calculations presented will utilize the Dip Tube basis method. See the **Calculations** section for equation definitions.

This evaluation follows the applicable guidelines of the *Engineering Calculations* procedure, TFC-ENG-DESIGN-C-10, Rev. A-5, and the technical basis and formatting requirements of TFC-ENG-CHEM-P-15, Rev. A-1 *Single-Shell Tank Interim Stabilization Evaluation.* When complete, this evaluation will be formally released as part of a direct revision to HNF-SD-RE-TI-178, *Single-Shell Tank Leak Stabilization Record.*

TANK WASTE DESCRIPTION:

Per Interoffice Memo 7G330-LMS-03-005, saltwell pumping yielded 97,621 gallons of net waste from 241-SX-102, while using 8,851 gallons of water for pump flushes and 75,695 gallons of water for dilution.

The following description was obtained by in-tank video taken 12/10/03 through the observation port designated riser # 8. The waste of 241-SX-102 is a rough, yellowish gray saltcake waste with an irregular surface of visible cracks and shelves that were created as the waste was dried out by saltwell pumping. The waste surface appears to be dry and shows no standing water upon the waste surface. A cylindrical depression ~36 feet in diameter and 8' deep has formed around the saltwell screen as a result of pumping activities. There is no evidence of supernatant liquid on the surface. The ENRAF plummet is located 25 feet from the tank wall (12.5 feet from the tank center) and reads 153.7 inches. The waste surface is generally flat across the tank aside from the large cylindrical depression around the saltwell screen.

The liquid observation well (LOW) instrumentation failed on 7/17/02. ENRAF readings indicate the surface level is 153.0 inches. Dip tube readings are obtained weekly by work package WS-04-0568 and through the saltwell Operator Control System (OCS). The current (07/05/04) dip tube level adjusted for the dip tube offset of 6.5 inches assuming a zero inch capillary height, is 68.1 inches. All reported levels are based on the centerline of the tank's dished bottom. Calculations do not take into account any retained gas within the waste.

Evaluation Prepared by _____ Date 7/15/2K4

Evaluation Checked by L.M. Sasaki _____ Date 7/15/04

Single-Shell Tank Interim Stabilization Evaluation Form (cont.)

EVALUATION CALCULATIONS AND COMMENTS:

TANK: **241-SX-102**

INPUT DATA & ASSUMPTIONS

Initial Liquid Level at Start of Pumping (ENRAF – 12/15/01) = 190.19 inches ~ 190.2 inches

Final ENRAF Reading (07/09/04) = 152.95 inches ~ 153.0 inches

Final Liquid Observation Well (LOW) Reading occurred 7/17/02 prior to instrumentation failure

Final Dip Tube Reading from WS-04-0568 & OCS (07/05/04) = 61.63 inches ~ 61.6 inches

Dip Tube Offset (Distance of lowest dip tube leg from tank bottom) = 6.5 inches

Final Adjusted Dip Tube Level = 61.63 inches + 6.5 inches = 68.13 inches ~ 68.1 inches

Divergence point = LOW & ENRAF Levels vs. time diverge (supernatant liquid is exhausted)

Divergence point = No divergence point as the LOW failed after the onset of saltwell pumping.

Net Waste Pumped (data through 08/18/03 on \\AP012\DPU) = 97,621 gal = 97.6 Kgallons

Capillary Height (based on LOW and saltcake bases) = 0 inches **

Sludge Volume = (209 KL) 55,212 gallons ****

Height of Sludge Layer (55.2 Kgal) above bottom ~ 27.45 inches ***

Tank Dished Bottom Volume (Lower 14.9" Height) = 20,553 gallons ***

Unpumpable Liquid Height Constant = 18 inches *

Assumed Sludge Porosity = 17% *

Assumed Saltcake Porosity = 24% *

For 100-series (75' dia.) tanks (500, 750, and 1000K gallon SSTs), 1 inch equals 2750 gallons when above the dish bottom. *

EQUATIONS

D.I.L. = Drainable Interstitial Liquid *
= {[Final Adj. Dip Tube Level – Sludge Height – Capillary Height] * 2750 gal/in} * Drainable porosity (saltcake) + (Sludge Volume) * assumed sludge porosity

D.L.R. = Drainable Liquid Remaining *
= D.I.L. + supernatant volume

P.L.R. = Pumpable Liquid Remaining *
= D.L.R. – [((Unpump. Ht – 14.9") * 2750 gal/in + Dish Vol.) * assumed sludge porosity]

*Reference HNF-2978, Rev. 5
**Reference RPP-5556, Rev. 0
***Reference RPP-13019, Rev. 0
****Twins Database query 07/09/04

Evaluation Prepared by [signature] Date 7/15/2004

Evaluation Checked by [signature] Date 7/15/04

Single-Shell Tank Interim Stabilization Evaluation Form (cont.)

EVALUATION CALCULATIONS AND COMMENTS:

TANK: **241-SX-102**

RESULTS/CALCULATIONS

DIP TUBE BASIS:

DIL = [(68.1" – 27.45" – 0") * 2750 gal/in] * 0.24 + (55,212 gal * 0.17)

= [111,788 * 0.24 + 55,212 gal * 0.17] = 26,829 + 9,386 = 36,215 (36.2 Kgal)

DLR = DIL + Supernatant = 36,215 gallons + 0 gallons = 36,215 gallons (36.2 Kgal)

PLR = DLR – [((18" – 14.9") * 2750 gal/in + 20,553 gal) * 0.17]

= 36,215 gal – [(8,525 gal + 20,553 gal) * 0.17] = 36,215 – [29,078 * 0.17] =

= 36,215 gal – 4,943 gal = 31,272 gal = (31.3 Kgal)

SOLIDS VOLUME:

The following description was obtained by review of the in-tank video taken 12/10/03. The ENRAF level during the video was 153.7 inches and will be used for the solids volume estimate. All estimates regarding waste dimensions were obtained by comparison with known dimensions of installed in-tank equipment and drawing H-2-39511, sht. 1. .The surface of the solid waste is assumed smooth and flat for the majority of the tank except for an approximate 36 foot diameter by 8 feet deep cylindrical depression centered on the saltwell screen. This depression is covered with various deep cracks and steep shelves due to saltwell pumping. The cylinder extends down approximately 96 inches to a 36-foot diameter flat surface around the saltwell screen.

Per HNF-2978, Rev. 5 and Best Basis Inventory (BBI) located in the TWINS database; the sludge volume of 241-SX-102 is 55.2 Kgal. For reporting purposes, the total quantity of solids in the tank will be calculated and the sludge volume will be subtracted from this total. This volume difference will then be the reported quantity of saltcake in 241-SX-102. For this calculation the saltcake and sludge solids volumes include the interstitial liquid but do not include any supernatant liquid.

The saltwell screen is not positioned in the center of the tank, but for the purpose of this analysis and calculations, it is assumed to be in the center. This approximation will have no impact on the volume calculated and will simplify the calculations for subtracting a cylindrical shaped depression. Therefore, for the purpose of this evaluation, the solids volume will include an evaluation of the upper surface (subtracting the cylindrical depression), lower volume and the dish volume. See SOLIDS CALCULATION FIGURE (next page). These volumes are then added together to obtain the total volume as follows:

Evaluation Prepared by _____ Date 7/15/2004

Evaluation Checked by _____ Date 7/15/04

Single-Shell Tank Interim Stabilization Evaluation Form (cont.)

EVALUATION CALCULATIONS AND COMMENTS:

TANK: **241-SX-102**

RESULTS/CALCULATIONS (cont.)

SOLIDS VOLUME (cont):

SOLIDS CALCULATION FIGURE

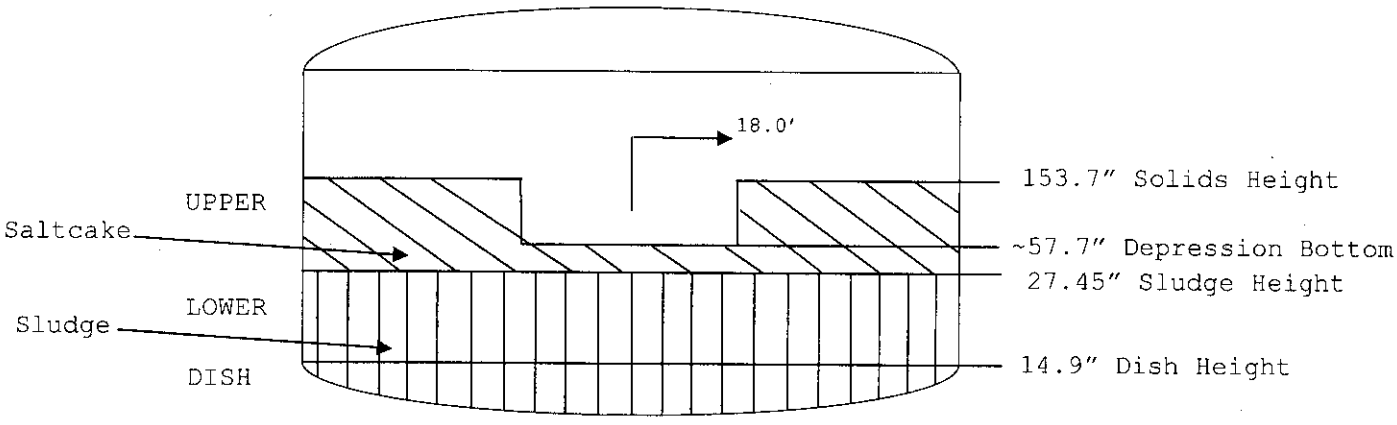

Volume (Upper) = [Vol. of (153.7"– 57.7") * 2750 gal/in] – Vol. (cylinder)

(Where the cylinder volume is = (pi * H * r^2) * 7.481 gal/ft^3

Volume (Upper) = 264,000 gal – [(pi * (8 ft) * (18 ft) ^2 * 7.481 gal/ ft^3]

Volume (Upper) = 264,000 gal – 60,918 gal = 203,082 gallons

Volume (Lower) = (57.7" – 14.9") * 2750 gal/in = 117,700 gallons

Volume (Dish) = 20,553 gallons

Volume (Supernatant) = 0

Volume (Tot) gallons = 203,082 + 117,700 + 20,553 = 341,335 gallons = 341.3 Kgal

Solids Volume Remaining = Volume (Tot) – Supernatant Liquid

= 341,335 gallons - 0 gallons = 341.3 Kgal

Saltcake Volume remaining = Solids Volume Remaining – Sludge Volume

= 341,335 gallons gals – 55,212 gallons = 286,123 gallons = 286.1 Kgal

Evaluation Prepared by [signature] Date 7/15/2004

Evaluation Checked by [signature] Date 7/15/04

Single-Shell Tank Interim Stabilization Evaluation Form (cont.)

EVALUATION CALCULATIONS AND COMMENTS:

TANK: **241-SX-102**

RESULTS/CALCULATIONS (cont.)

FLOW DATA:

The final pump flow rate is found by data obtained from operating procedure TO-420-102, Rev. B-7 from 2000 August 17, 2003 to 2000 August 18, 2003 that show a total of 150.5 gallons of net waste pumped over the time period of 1440 minutes (24 hours). These data were taken over the time span comprising the last stable operating shift of the saltwell pump prior to major equipment failure. The following equation shows the final pumping rate:

Pump Rate = [150.5 gallons / 1440 minutes] = (0.104 gpm)

The flow rate exceeds the minimum stabilization flow rate of 0.05 gallons per minute. The flow rate of 0.21 gallons per minute will be used in the letter of justification for major equipment failure to calculate expected pumping durations and water usage if pumping of 241-SX-102 is restarted.

SOFTWARE: None.

REFERENCES:

TO-420-102, Rev. A-1 through B-7, *Perform 241-SX-102 Saltwell Pumping.*

H-2-39511, Sht. 1, Rev. 3, *75 ft. Storage Tanks Composite Section Waste Storage Tanks 241-SX*

HNF-2978, Rev. 5, *Updated Pumpable Liquid Volume Estimates and Jet Pump Durations for Interim Stabilization of Remaining Single-Shell Tanks.*

RPP-5556, Rev. 0, *Updated Drainable Interstitial Liquid Volume Estimates for 119 Single-Shell Tanks Declared Stabilized.*

RPP-13019, Rev. 0, *Determination of Hanford Tank Waste Volumes.*

HNF-SD-RE-TI-178, Rev. 8, *Single-Shell Tank Leak Stabilization Record.*

TFC-ENG-DESIGN-C-10, REV A-5, *Engineering Calculations.*

TFC-ENG-CHEM-P-15, Rev A-1, *Single Shell Tank Interim Stabilization Evaluation.*

WS-04-0568, *241-G Weight Factor and Specific Gravity Readings.*

7G330-LMS-03-005, *August 2003 Saltwell Pumping Volume.*

7G320-04-MJS.022, *Justification for Declaring 241-SX-102 Interim Stabilized, Due to Major Equipment Failure.*

Tank Waste Information System (TWINS) 2004, *queried July 9*, 2004, Hanford intranet at http://twins.pnl.gov/twins.htm

Pumpchrts_PE.xls, Excel log of saltwell pumping history from server \\ap012\dpu\pumpchartsPE.

Evaluation Prepared by _____ Date 7/15/2004

Evaluation Checked by _____ Date 7/15/04

Single-Shell Tank Interim Stabilization Evaluation Form (cont.)

EVALUATION CALCULATIONS AND COMMENTS:

TANK: **241-SX-102**

CONCLUSIONS/RECOMMENDATIONS:

241-SX-102 has met the criteria for declaration of interim stabilization, due to major equipment failure. See Page 1 for summary and final tank disposition/approvals and letter 7G320-04-MJS.022 "Justification for declaring 241-SX-102 interim stabilized, due to major equipment failure."

ATTACHMENTS:

All record attachments, raw data, and calculations for this evaluation, as well as other information may be found in the tank history file maintained by Interim Stabilization Engineering, per the requirements TFC-ENG-CHEM-P-15, section 4.2.19.

Evaluation Prepared by _____ Date 7/15/2004

Evaluation Checked by _____ Date 7/15/04

INTEROFFICE MEMO

Hanford Group, Inc.

From:	Retrieval/Closure System Engineering	7G320-04-mjs.022
Phone:	373-2408 S7-24	
Date:	July 20, 2004	
Subject:	JUSTIFICATION FOR DECLARING 241-SX-102 INTERIM STABILIZED, DUE TO MAJOR EQUIPMENT FAILURE.	

To:	T.L. Hissong	S7-83
Copies:	W.B. Barton	S7-70
	J.W. Cammann	S7-83
	R.A. Dodd	S7-83
	J.N. Doeler	S7-24
	K.C. Dorwick	S7-83
	R.A. Flores	S7-20
	T.M. Horner	S5-08
	M.R. Koch	S7-70
	D.J. Saueressig	S7-20
	S.L. Swaney	S7-24
	W.T. Thompson	S7-70
	R.P. Tucker	S7-83
	D.T. Vladimiroff	S7-20

Saltwell pumping of Tank 241-SX-102 began on 12/15/01 and continued until 08/18/03 when the saltwell jet pump shutdown due to a high temperature alarm. Subsequent investigation found that the transfer system will flush well and the pump motor will start, however, the pump will not develop head pressure. This is indicative of shaft or impellor failure, most likely due to excessive wear. A net volume of 97,621 gallons of liquid waste was transferred to Double-Shell tank (DST) 241-SY-102 before the failure occurred. Waste volume calculations show 36,215 gallons of drainable interstitial liquid (DIL) remaining in the tank, of which 31,272 gallons is calculated as the quantity of pumpable liquid remaining (PLR). Video observation reveals there is no supernatant liquid remaining. *Single-Shell Tank Interim Stabilization Evaluation*, TFC-ENG-CHEM-P-15, requires a jet pumped waste tank to contain less than 50,000 gallons of DIL, less than 5,000 gallons of supernatant liquid, and achieve a maximum pump out or in-flow rate of 0.05 gallons per minute for interim stabilization. However, a single-shell waste tank can be declared interim stabilized by major equipment failure by meeting the DIL and supernatant quantities, but without meeting the 0.05 gpm criteria. Tank 241-SX-102 meets the criteria for interim stabilization due to major equipment failure.

The hydraulic properties and pumping history of waste tanks in SX-Farm are similar and indicate that achieving zero pumpable liquid in 241-SX-102 is not likely. A quantitative assessment of predicted pumpable liquid remaining (PPLR) was performed per RPP-12324 "Interim Stabilization Calculations: Pumpable Liquid Remaining". Table 3-3 of this document specifies the predicted quantity of pumpable liquid that will remain once the stabilization criteria have been fulfilled. The predicted pumpable liquid remaining for 241-SX-102 is 37,000 gallons. Since the calculated volume of PLR is less than the PPLR for 241-SX-102, the volume of pumpable liquid in 241-SX-102 is defined as zero gallons. To determine the actual volume of waste available for recovery, a comparison of similar tanks based on flow rate was conducted.

The final flow rate observed from 241-SX-102 was approximately 0.1 gpm. For comparison, four tanks from 241-SX Farm that achieved the 0.05 gpm final flow rate criteria (241-SX-101, 241-SX-103, 241-SX-105, & 241-SX-106), were analyzed to determine the additional amount of net waste volume removed after the flowrate of 0.1 gpm was observed. This resultant average value is assumed to be the net waste volume available for removal from 241-SX-102, if pumping were resumed. The pumping history of each tank is as follows:

TANK	VOL REMOVED AFTER 0.1 GPM ACHIEVED
241-SX-101	1292 GAL
241-SX-103	3408 GAL
241-SX-105	3161 GAL
241-SX-106	5103 GAL
AVERAGE	**3241 GAL**

Therefore, the average value of 3,241 gallons will be used for this evaluation as the remaining pumpable volume. This value will be assumed for the following calculations in this evaluation.

If repairs at 241-SX-102 were completed, the time to pump the remaining liquid from the tank is dependent upon the flow rates of the liquid wastes into the saltwell screen. The current flow rate of liquid into the saltwell screen at 241-SX-102 is calculated at 0.104 gpm, or 150 gallons per day (gpd). By observation, the flow rate of liquid into the saltwell screen will decrease and approach 0.05 gpm (72 gpd) as the interstitial liquid level drops. Therefore, to determine the estimated time to pump 241-SX-102, an average rate of 0.77 gpm (111 gpd) at 50% operating efficiency is assumed. Using this rate and efficiency, the time to remove the remaining pumpable liquid of 3,241 gallons from tank 241-SX-102 is approximately 8 weeks.

Over this 8-week period, numerous system and transfer line flushes would be required to prevent the typical plugging seen with saltwell transfer systems. The transfer line hold up volume of 243 gallons necessitates frequent flushes. For example, from 08/14/03 to 08/19/03 a total of 791 gallons of flush water and 295 gallons of dilution water were required to maintain the transfer system operable. During this time a total of 393 gallons of waste was pumped. If pumping was restarted and similar flush volumes were required for operability, an additional 8,688 gallons of flush and dilution waters would be added to the DST waste inventory to remove the estimated 3,241 gallons of liquid from 241-SX-102.

To facilitate the replacement of the failed jet pump, the pump pit cover plate at 241-SX-102 would have to be removed and workers would be required to work over the open pit. Before the 241-SX-102 pump could be replaced, extensive preparation of the pump pit is required to minimize the spread of contamination. Radiological Control Planning prepared an exposure report for the original pit activity for a pump installation at 241-SX-102. This evaluation detailed the level of radiation exposure for each member of the field crew performing the job. The work to install the pump resulted in a dose exposure of 322 mrem. Conservatively, this number will be doubled as the original pit job did not entail lifting and disconnecting a failed, existing pump. Therefore, the work to prepare the pump pit and replace the pump would result in a dose exposure estimated to be 644 mrem for the job.

Costs for repair and continued operation of 241-SX-102 are based on Single-Shell Tank Interim Stabilization, Rev. 3 Working Schedule Baseline. It is estimated that it would cost $79,000 to

replace the failed pump and meet waste disposal costs at 241-SX-102. If repairs were made and pumping was restarted, the project expenses to calibrate and maintain the current equipment at 241-SX-102 for the projected 8-week pumping schedule is estimated to cost $55,000. Additionally, an annual waste profile costing $9,400 is required during the projected pumping duration of 241-SX-102. The total project cost for restart and continued maintenance is $143,400.

Based upon these evaluations of ALARA principles, remaining pumpable liquid, generation of excess wastes, and cost concerns, it is recommended that tank 241-SX-102 be declared interim stabilized on the basis of major equipment failure as defined by *Single-Shell Tank Interim Stabilization Evaluation*, TFC-ENG-CHEM-P-15.

If you have any questions, please call me on 373-2408, or Stephen L. Swaney on 373-3472.

for L.S. Krogsrud
Michael J. Sutey, Manager
Retrieval/Closure System Engineering

sls

Concurrence: M.R. Koch, Director, Retrieval/Closure Engineering

Signature M.R. Koch Date 7.20.04

Single-Shell Tank Interim Stabilization Evaluation Form

TANK: **241-SX-103**

(Jet Pumping only) Reason for stopping jet pumping:

[x] Meets 0.05 gpm criteria, Date of Shutdown ____9/17/02_____

[ ] Major equipment failure, Date of Shutdown _____

Tank Waste Surface Level Condition and Comments: _____ SEE DESCRIPTION PAGE 2 _____

Evaluation: (See continuation page for calculations and additional comments)

Photo/video review completed - Date of most recent photo/video _____012/31/01_____

[x] Tank history, temperature profile and intrusion reviews completed and no anomalies identified

Starting Liquid Level ___ 233.8" _____ Method ____ENRAF_____ Date ___10/26/00___
Final liquid level _____ 86.9" _____ Method _____LOW_____ Date ___05/29/03___
Total Net Pumped Volume ___133.8 Kgal____
Capillary Height Used in Calculation ___6"____
Final Solids Volume _____637.0 Kgal_____
Final Average Flow rate _____0.047 gpm____
Calculated Porosity _____0.221 _____
Supernatant Volume Remaining ____ 0 gal ___
Drainable Interstitial Liquid _____40.2 Kgal____
Drainable Liquid Remaining ____40.2 Kgal____
Pumpable Liquid Remaining ____35.7 Kgal____

[ ] Justification letter attached (Interim Stabilization System Engineer)

Disposition of Tank:

[x] Tank Interim Stabilized
[ ] Tank Not Interim Stabilized; Re-start Pumping

Evaluation prepared by Retrieval/Closure System Engineer: _____ Date 5/30/2003

Closure Projects Engineering Support Process Engineer: _____ Date 5/30/03

APPROVED BY:

Manager, Retrieval/Closure System Engineering _____ Date 5/30/03

Manager, Closure Projects System Engineering _____ Date 5/30/03

Manager, SST System Engineering K. HOLL _____ Date 5/30/03

Single-Shell Tank Interim Stabilization Evaluation Form (cont.)

EVALUATION CALCULATIONS AND COMMENTS:

TANK: **241-SX-103**

OBJECTIVE/PURPOSE:

This Single-Shell Tank Interim Stabilization Evaluation provides the data and supporting calculations involved in declaring single-shell waste storage tank 241-SX-103 interim stabilized. The criteria to declare 100-series jet-pumped single-shell waste storage tanks to be interim stabilized for interim stabilization are: 1)the tank contains less than 50,000 gallons of drainable interstitial liquid (DIL), 2) the tank contains less than 5,000 gallons of supernatant, and 3) the measured maximum pump-out or in-flow rate is less than 0.05 gallons per minute. In the event of major equipment failure, Criteria 3 may be waived with a letter of justification and management approval.

ANALYSIS METHOD:

The analysis method used for this evaluation relied upon the criteria and equations established in HNF-2978, Rev. 4, *Updated Pumpable Liquid Volume Estimates and Jet Pump Durations for Interim Stabilization of Remaining Single-Shell Tanks*. Calculations presented will utilize the LOW basis method. See the **Calculations** section for equation definitions.

This evaluation follows the applicable guidelines of the *Engineering Calculations* procedure, TFC-ENG-DESIGN-C-10, REV A, and the technical basis and formatting requirements of *Tank Farm Facility Interim Stabilization Evaluation* procedure, HNF-IP-0842, Volume IV, Section 4.1. When complete, this evaluation will be formally released as part of a direct revision to HNF-SD-RE-TI-178, *Single-Shell Tank Leak Stabilization Record.*

TANK WASTE DESCRIPTION:

The following description was obtained by in-tank video taken 12/31/01 and is considered accurate as the difference between interstitial liquid level (ILL) and surface levels have remained relatively unchanged since the video was performed. Specifically, 12/31/01 and 05/29/03 ILL/ENRAF level differences were 111.2" and 103.3", respectively. Therefore, a second video will show no indication of supernatant liquid or any discernable changes in waste surface.

The waste of 241-SX-103 is a rough, yellowish gray saltcake waste with an irregular surface of visible cracks and shelves that were created as the waste was dried out by saltwell pumping. Saltwell pumping yielded 133,771 gallons of net waste from 241-SX-103 through three separate pumping campaign evolutions, while using 6,721 gallons of water for flushes and 152,449 gallons of water for dilution. The separate campaigns were due to 2 major shutdowns. The first shutdown was due to a personnel radiation exposure issue at the pump pit. The second shutdown was due to the failure of the jointed Hose-in-Hose Transfer Line (HIHTL) between SX and S-farms. The waste surface appears to be dry and shows no standing water within the tank. A small gap around the saltwell screen shows no evidence of supernatant liquid. The waste surface slopes gradually from the tank sidewall to the center of the saltwell screen. The waste surface at the tank wall was estimated from the video observations to be 245 inches. The ENRAF is located 25.5 feet from the tank sidewall (12 feet from the tank center) and reads 190.63 inches. The ENRAF probe is approximately the same level as the waste level at the saltwell screen.

Currently, the waste surface level is 190.2 inches from ENRAF readings. The liquid observation well (LOW) readings indicate an ILL of 86.9 inches. Dip tube readings are obtained weekly by work package WS-02-0581. The dip tube level on 04/28/03, adjusted for a dip tube to tank centerline bottom offset of 6.75 inches, is 83.5 inches. All reported levels are based off the centerline of the tank's dished bottom. Calculations do not take into account any retained gas within the waste.

Evaluation Prepared by _____ Date 5/30/2K3

Evaluation Checked by W.B. Barton Date 5/30/03

Single-Shell Tank Interim Stabilization Evaluation Form (cont.)

EVALUATION CALCULATIONS AND COMMENTS:

TANK: **241-SX-103**

INPUT DATA & ASSUMPTIONS

Final Liquid Observation Well (LOW) Reading (05/29/03) = 86.928 inches ~ 86.9 inches

Final ENRAF Reading (05/29/03) = 190.21 inches ~ 190.2 inches

Divergence point = LOW and ENRAF Levels vs. time diverge (supernatant liquid is exhausted)

Divergence point = (based on LOW Level from 11/15/00) = 202.392 inches ~ 202.4 inches

Net Waste Pumped since divergence (use week end 11/19/00 from \\AP012\DPU) = 94,479 gallons

Initial Liquid Level at Start of Pumping (ENRAF - 10/26/00) = 233.79 inches ~ 233.8 inches

Capillary Height (based on LOW basis) = 6 inches **

Sludge Volume (based on Best Basis Inventory (BBI) calculations) = 78,000 gallons *

Height of Sludge Layer (78 Kgal) above bottom ~ 36.5 inches

Tank Dished Bottom Volume (Lower 14.9" Height) = 18,500 gallons **

Supernatant Volume (12/31/01 In-Tank Video Estimate) = 0 gallons

Assumed Sludge Porosity = 17% **

For 100-series (75' dia.) tanks (500, 750, and 1000K gallon SSTs), 1 inch equals 2750 gallons when above the dish bottom. **

EQUATIONS

Drainable Porosity (Saltcake) = Net waste pumped (Campaign #3)/[(Divergence point – final LOW level)*2750 gal/in]

D.I.L. = Drainable Interstitial Liquid **
= {[Final LOW Level – Sludge Height – Capillary Height] * 2750 gal/in} * Drainable porosity (saltcake) + (Sludge Volume) * assumed sludge porosity

D.L.R. = Drainable Liquid Remaining **
= D.I.L. + supernatant volume

P.L.R. = Pumpable Liquid Remaining **
= D.L.R.– [((18" Unpump. Ht – 14.9")* 2750 gal/in) + (Dish Vol)* assumed sludge porosity]

*TWINS database query 05/29/03
**Reference HNF-2978, Rev. 4

Evaluation Prepared by _____ Date 5/30/2003

Evaluation Checked by _____ Date 5/30/03

Single-Shell Tank Interim Stabilization Evaluation Form (cont.)

EVALUATION CALCULATIONS AND COMMENTS:

TANK: **241-SX-103**

RESULTS/CALCULATIONS

POROSITY:

Typically, the observed waste porosity used for remaining liquid volume calculations is calculated based on total pumping duration. However, it is permitted to use individual pumping campaigns if the data is clear and provides a more credible estimation of the residual waste properties. See Interim Stabilization evaluations for 241-C-102 (dated 09/95), 241-C-107 (dated 08/95), and 241-C-110 (dated 06/95) in HNF-SD-RE-TI-178, Rev. 8, *Single-Shell Tank Leak Stabilization Record.*

The following data show the gallons pumped and change in ILL during each pumping campaign:

CAMPAIGN	PUMP DATES	GALS PUMPED	ILL START	ILL END
1	11/00 – 04/01	77,034	202.4 inch	113.2 inch
2	09/01 – 11/01	10,084	113.2 inch	99.0 inch
3	07/02 – 09/02	7,361	99.0 inch	86.9 inch

Campaign #1 pumping volumes began on 11/20/00 when the supernatant volume was exhausted (point of divergence). Also, it should be noted that it was necessary to calculate the ILL END point of Campaign #1 (ILL START point of Campaign #2) as the ILL had not come to equilibrium during the shutdown period between Campaigns #1 and #2. The projected equilibrium level was calculated using an Excel ™ spreadsheet trend line function using data from 08/15/01 to 09/12/01. The trend was a 2nd order polynomial based function utilizing the following equation:

$$Y = -0.0004x^2 + 33.331x - 620995 \text{ with an } R^2 \text{ value of } 0.9967.$$

Where Y is level and X is time. Utilizing this projected value, the measured ILL of 106.4 inches on 09/12/01 would have climbed to a maximum of 113.2 inches on approximately 01/05/02. The predicted ending level allows for determination of a more accurate porosity for the first two campaigns. The observed porosity (saltcake) value is calculated using the following equation:

Observed Porosity (Saltcake) = Net waste pumped / [(ILL START – ILL END)*2750 gal/in]

Specifically:

Campaign #1 = (77,034 gallons) / [(202.4" – 113.2") * 2750 gal/in] *100% = 31.4%

Campaign #2 = (10,084 gallons) / [(113.2" – 99.0") * 2750 gal/in] *100% = 25.8%

Campaign #3 = (7,361 gallons) / [(99.0" – 86.9") * 2750 gal/in] *100% = 22.1%

The observed trend of decreasing saltcake porosity as a function of waste depth shows lower pore volumes (lower porosity) exist at lower waste depths. This is consistent with increased compression of the solids matrix and subsequent interstitial liquid displacement at lower depths in the tank. The porosity value from the third pumping campaign will bound all remaining wetted saltcake as the porosity value will continue to drop as the waste level decreases. Therefore, the observed saltcake porosity of 22.1% from Campaign #3 will be used throughout the remainder of this evaluation.

Evaluation Prepared by _____ Date 5/30/2003

Evaluation Checked by W R Barton Date 5/30/03

Single-Shell Tank Interim Stabilization Evaluation Form (cont.)

EVALUATION CALCULATIONS AND COMMENTS:

TANK: **241-SX-103**

RESULTS/CALCULATIONS (cont.)

LOW BASIS:

DIL = [(86.9" – 36.5" – 6") * 2750 gal/in] * 0.221 + (78,000 gal * 0.17)

= [122,100 * 0.221 + 78,000 gal * 0.17] = 26,984 + 13,260 = 40,244 gallons (40.2 Kgal)

DLR = DIL + Supernatant = 40,244 gallons + 0 gallons = 40,244 gallons (40.2 Kgal)

PLR = DLR – [((18" – 14.9") * 2750 gal/in + 18,500 gal) * 0.17]

= 40,244 gal – [(8,525 gal + 18,500 gal) * 0.17] = 40,244 - 4594 = 35,650 gal (35.7 Kgal)

SOLIDS VOLUME:

The following description was obtained by review of the in-tank video taken 12/31/01. The ENRAF level during the video was 190.6 inches, however, the current level of 190.2 inches will be used for the solids volume estimate. All estimations regarding waste dimensions were obtained by comparison with known dimensions of installed in-tank equipment. The upper waste surface of 241-SX-103 is 245 inches based on sidewall estimates and drawing H-2-39511, sht. 1. The upper waste level from the tank sidewall to a 20-foot radial central depression is assumed to be level waste. From the edge of the cone shaped central depression, the waste slopes gradually towards the saltwell screen. The waste at the saltwell screen is at approximately the same level as the ENRAF level of 190.2 inches. The upper waste surface is uneven and rough, with many cracks and shelves due to surface drying caused by saltwell pumping. Per Best Basis Inventory (BBI) located in the TWINS database; the sludge volume of 241-SX-103 is 78 Kgal. For reporting purposes, the total quantity of solids in the tank will be calculated and the BBI sludge volume will be subtracted from this total. This volume difference will then be the reported quantity of saltcake in 241-SX-103.

The saltwell screen is not positioned in the center of the tank, but for the purpose of this analysis and calculations, it will assumed to be in the center. This approximation will have no impact on the volume calculated and will simplify the calculations for subtracting a cone shaped depression. Therefore, for the purpose of this evaluation, the solids volume will include an evaluation of the upper surface (subtracting the cone shaped depression), lower volume and the dish volume. See SOLIDS CALCULATION FIGURE (next page). These volumes are then added together to obtain the total volume as follows:

Evaluation Prepared by _____ Date 5/30/2003

Evaluation Checked by _____ Date 5/30/03

Single-Shell Tank Interim Stabilization Evaluation Form (cont.)

EVALUATION CALCULATIONS AND COMMENTS:

TANK: **241-SX-103**

RESULTS/CALCULATIONS (cont.)

SOLIDS VOLUME (cont):

SOLIDS CALCULATION FIGURE

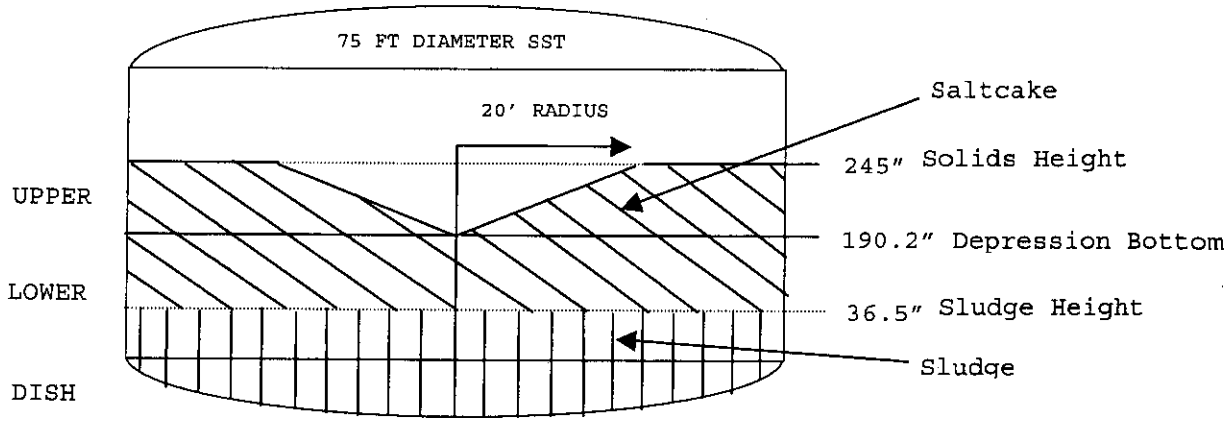

Volume (Upper) = Vol. of [(245.0 in – 190.2 in) * 2750 gal/in] – [Vol. of Cone Shaped Depression]

(Where cone volume is = pi * (1/3) * (Height (inches)/12) ft * (cone radius')$^{\wedge 2}$ * 7.481 gal/ft$^{\wedge 3}$)

Volume (Upper) = 150,700 gal – [pi * (1/3) * (Height (inches)/12) ft * (cone rad')$^{\wedge 2}$ * 7.481 gal/ft$^{\wedge 3}$]

Volume (Upper) = 150,700 gal – [(pi/3) * (245 in – 190.2 in)/12) ft * (20 ft)$^{\wedge 2}$ * 7.481 gal/ft$^{\wedge 3}$]

Volume (Upper) = 150,700 gal – 14,310 gal = 136,390 gallons

Volume (Lower) = Vol. of [(190.2 in – 14.9 in) * 2750 gal/in = 482,075 gallons

(Volume (Dish) = 18,500 gallons

Volume (Tot) gallons = 136,390 + 482,075 + 18,500 = 636,965 gallons = 637.0 Kgal

Solids Volume Remaining = Volume (Tot) – Supernatant Liquid

= 636,965 gals – 0 gals = 636,965 gallons = 637.0 Kgal

Saltcake Volume remaining = Solids Volume Remaining – Sludge Volume

= 636,965 gals – 78,000 gals = 558,965 gallons = 559.0 Kgal

Evaluation Prepared by _____ Date 5/30/2003

Evaluation Checked by _____ Date 5/30/03

Single-Shell Tank Interim Stabilization Evaluation Form (cont.)

EVALUATION CALCULATIONS AND COMMENTS:

TANK: **241-SX-103**

RESULTS/CALCULATIONS (cont.)

FLOW DATA:

The final pump rate is found by data obtained from saltwell pumping procedure TO-420-103 data sheets from 1130 September 16th to 0930 September 17th, 2002 that show a total of 62 gallons of waste were pumped over the time period of 1320 minutes (22.0 hours), while the pump ran in AUTOMATIC mode. These data were taken during the final two shifts of pumping operations on 241-SX-103 prior to pump shutdown for stabilization review at 1718 on September 17th, 2002. Pumping of 241-SX-103 had been continuous since 0511 hours on September 12th for 156 hours of operation. The pump was put in AUTOMATIC mode at 1130 hours on September 16th and remained in AUTOMATIC until the completion of pumping. The following equation shows the pumping rate for this final pump run:

Pump Rate = [62 gallons/1320 minutes] = (0.047 gpm)

SOFTWARE: Microsoft Excel ™ 2000, Version 9.0.4402 SR-1, Copyright 1985-1999.

REFERENCES:

TO-420-103, Rev. A-0 and C-14, *Perform 241-SX-103 Saltwell Pumping.*

H-2-39511, Sht. 1, Rev. 3, *75 ft. Storage Tanks Composite Section Waste Storage Tanks 241-SX*

HNF-2978, Rev. 4, *Updated Pumpable Liquid Volume Estimates and Jet Pump Durations for Interim Stabilization of Remaining Single-Shell Tanks.*

Tank Waste Information System (TWINS) 2003, *queried May 29*, 2003, [posted Tank Integrity Reports], Hanford intranet at http://twinswhse.pnl.gov/

TFC-ENG-DESIGN-C-10, REV A, *Engineering Calculations.*

HNF-IP-0842, Volume IV, Section 4.1, *Tank Farm Facility Interim Stabilization Evaluation*

HNF-SD-RE-TI-178, Rev. 8, *Single-Shell Tank Leak Stabilization Record.*

WS-02-0581, *241-G Weight Factor and Specific Gravity Readings*

CONCLUSIONS/RECOMMENDATIONS:

241-SX-103 has met the applicable criteria for declaration of interim stabilization. See Page 1 for summary and final tank disposition and approvals.

ATTACHMENTS:

All record attachments, raw data, and calculations for this evaluation, as well as other information may be found in the tank history file maintained by Interim Stabilization Engineering, per the requirements HNF-IP-0842, Vol. 4 Section 4.1, paragraph 3.4.1.

Evaluation Prepared by _____ Date 5/30/2003

Evaluation Checked by _____ Date 5/30/03

Single-Shell Tank Interim Stabilization Evaluation Form.

TANK: **241-SX-104**

(Jet Pumping only) Reason for stopping jet pumping:

[ ] Meets 0.05 gpm criteria, Date of Shutdown _____

[x] Major equipment failure, Date of Shutdown _____7/27/99_____

Tank Waste Surface Level Condition and Comments: _____ SEE DESCRIPTION PAGE 2 _____

Evaluation: (See continuation page for calculations and additional comments)

Photo/video review completed - Date of most recent photo/video _____10/21/99_____

[x] Tank history, temperature profile and intrusion reviews completed and no anomalies identified

Starting Liquid Level ___ 215.3"_____ Method ____LOW _____ Date ___07/21/98_____
Final liquid level _____ 86.8" _____ Method ____Dip Tubes____ Date ___03/30/00_____
Total Net Pumped Volume ____115.1 Kgal_____
Capillary Height Used in Calculation ___0"____
Final Solids Volume _____397.6 Kgal_____
Final Average Flow rate _____0.14 gpm_____
Calculated Porosity _____0.34_____
Supernatant Volume Remaining _____ 0 gal ____
Drainable Interstitial Liquid _____47.7 Kgal_____
Drainable Liquid Remaining _____47.7 Kgal____
Pumpable Liquid Remaining ____43.6 Kgal_____

[x] Justification letter attached (Interim Stabilization Cognizant Engineer)

Disposition of Tank:

[x] Tank Interim Stabilized
[ ] Tank Not Interim Stabilized; Re-start Pumping

Evaluation prepared by SST Cognizant Engineer: JM Deeler Date 4/3/00

Evaluation checked by Process Engineer: J. R. Fitzel Date 4-3-00

Interim Stabilization Cognizant Engineer: [signature] Date 4/3/2000

APPROVED BY:

Manager, Interim Stabilization Engineering M J Rich Date 4/3/00

Manager, Process Engineering [signature] for C. Dehgh-Arice Date 4/3/00

Manager, SST Engineering [signature] for RE Larson Date 4/3/00

Single-Shell Tank Interim Stabilization Evaluation Form. (con

EVALUATION CALCULATIONS AND COMMENTS:

TANK: **241-SX-104**

The surface of 241-SX-104 is a rough, yellowish gray saltcake waste with an irregular surface of visible cracks and shelves that were created as the surface was dried out. The waste surface appears to be dry and shows no standing water within the tank. Two 5 to 6 foot deep holes around both saltwell screens near the center of the tank also show no evidence of supernatant liquid. A large depression in the center of the tank is estimated to be 20 feet in diameter. This depression surrounds both of the saltwell screens, temperature probe, and ENRAF devices. The ENRAF shows the surface of the depression to be 168.96 inches above the dish bottom of the tank. The waste surface slopes gradually from one side of the tank to the opposite sidewall. Liquid observation well (LOW) readings indicate an interstitial liquid level (ILL) of 93.9 inches. Dip tube readings located at the tank center report and adjusted liquid surface level of 86.8 inches. All levels are based off the centerline of the tank's dished bottom.

For the purposes of this evaluation, the dip tube readings will be used to determine the final quantities of drainable and pumpable liquid in tank 241-SX-104. To calculate drainable interstitial liquid (DIL) using dip tube measurements, capillary height may not be subtracted in the equation per RPP-5556, Rev. 0. This is due to there being no waste above the liquid in the saltwell screen to retain liquid through capillary forces.

DATA

LOW Reading (03/28/00) = 93.924 inches ~ 93.9 inches

ENRAF Reading (03/28/00) = 168.96 inches ~ 169.0 inches

Dip Tube Reading (03/30/00) = 82.77 inches + 4 inches (distance off tank bottom)
= 86.77 inches ~ 86.8 inches

Calculated Saltcake Waste Porosity = 34%

Assumed Sludge Waste Porosity = 15% **

Height of Sludge Layer (136 Kgal) above bottom = 57.6 inches ##

Height of Saltcake Layer above bottom (from 10/29/99 video) = 175.0 inches

Tank Dished Bottom Volume (Lower 14.9" Height) = 18,500 gallons **

Supernatant Volume (10/21/99 In-Tank Video Estimate) = 0 gallons

D.I.L. = Drainable Interstitial Liquid **
= [(Saturated Solids Ht. – 14.9")* 2750 gal/in + 18,500 gal]* porosity

D.L.R. = Drainable Liquid Remaining **
= D.I.L. + supernatant liquid

P.L.R. = Pumpable Liquid Remaining **
= D.I.L.+ supernatant– [(18" Unpumpable Ht.– 14.9")* 2750 gal/in + 18,500 gal]* porosity

**Reference HNF-2978, Rev. 1
##Reference HNF-EP-0182-*

Evaluation Prepared by [signature] Date 4/3/00

Evaluation Checked by [signature] Date 4-3-00

Single-Shell Tank Interim Stabilization Evaluation Form. (cont.)

EVALUATION CALCULATIONS AND COMMENTS:

TANK: **241-SX-104**

POROSITY:

Porosity = Net waste pumped / [(Initial liquid level – final liquid level) *2750 gal/in]

= 115,100 gallons / [(215.3" – 93.9") * 2750 gal/in] = 0.3448 ~ 34%

DIP TUBE BASIS:

The Drainable Interstitial Liquid will be based on the calculated saltcake porosity of 34% and the assumed sludge porosity of 15% based on the quantities of each solid listed in the monthly Waste Status Summary Report (HNF-EP-0182-*). The capillary height is fully within the saltcake region, but is not used with the dip tube basis. The unpumpable height is fully within the sludge region.

DIL = (86.8"– 57.6") * 2750 gal/in *.34 + (57.6" – 14.9") * 2750 gal/in * .15 + 18,500 gal * .15

= [27,302 + 17,614 + 2,775] = 47,691 gallons (47.7 Kgal)

DLR = DIL + Supernatant = 47,691 gallons + 0 gallons = 47,691 gallons (47.7 Kgal)

PLR = DIL + Supernatant – [(18" – 14.9")* 2750 gal/in + 18,500 gallons]* .15

= 47,691 + 0 – 4054 = 43,637 gallons (43.6 Kgal)

SOLIDS VOLUME:

The slight sloping of the waste from the tank wall (~175") to the edge of the large depression (169") is assumed to be flat. An average value of 172" will be used for calculating the remaining solids volume. The volume inside the depression is assumed to be a right circular cone (radius 10 feet & height 6 feet) and will be subtracted from the top surface volume. The total solids volume of tank 241-SX-104 is found by the following equation:

Volume (Tot) = Volume (top surface) - Volume (inside depression) + Volume (dished bottom)

Volume (Tot) = (172" – 14.9") * 2750 gallons/in – (pi/3) *(10)^2 * (6) * 7.481 gal/ft^3 + 18,500 gallons

= 432,025 gals – 4700 gals + 18,500 gals = 445,825 gallons

Solids Volume = Volume (Tot) – Drainable Liquid Remaining (D.L.R.)

= 445,825 gals – 48,252 = 397,573 = 397.6 Kgal

Evaluation Prepared by [signature] Date 4/3/00

Evaluation Checked by [signature] Date 4-3-00

EVALUATION CALCULATIONS AND COMMENTS:

TANK: **241-SX-104**

FLOW DATA:

Saltwell pumping data from July 23rd to July 25th netted –176 gallons of waste pumped from 241-SX-104. This number reflects 168 gallons of flush water and 1,157 gallons of dilution water usage. During this time period, the saltwell pump operated for a total of 51 hours, or 71% efficiency. The following equation shows the final pump out rate:

Pump Rate = [(-176 gallons/51 hours) * (1hr/60 minutes)] = (-0.058 gpm)

The in-flow rate of the saltwell screen was also analyzed with a plot of the refill rate of the saltwell screen versus time. The refill of the saltwell screen, as reported by the saltwell system DTAM, began at a weight factor transmitter (WFT) level of 6.0 inches (4.3 inches adjusted for specific gravity) @ 0500 on July 25th. The refill rate continued to be steady until a point at 0620 on July 25th. At this time, the DTAM reported the WFT level in the screen as 52.6 inches (37.6 inches adjusted). A typical 10 inch diameter saltwell screen will hold 0.34 gallons/inch. The following equation calculates the final average in-flow rate:

In-Flow Rate = [((37.6 inches – 4.3 inches) * 0.34 gallons/inch)/80 minutes]

= 11.32 gallons/80 minutes = (0.14 gpm)

Due to the uncertainty derived from the negative pump rate, the in-flow rate will be used for all calculations in the letter of justification for major equipment failure.

Evaluation Prepared by [signature] Date 4/3/00

Evaluation Checked by [signature] Date 4-3-00

74D00-00-mrk.007

From: Interim Stabilization Engineering
Phone: 373-2699 S7-24
Date: April 18, 2000
Subject: JUSTIFICATION FOR DECLARING 241-SX-104 INTERIM STABILIZED, DUE TO MAJOR EQUIPMENT FAILURE

To:	T. L. Hissong	S7-20	CHG Correspondence Control	H6-08
cc:	V. C. Boyles	R2-11	P. F. Kison	T4-07
	C. DeFigh-Price	R2-12	R. L. Larson	T4-07
	J. G. Field	R2-11	R. S. Popielarczyk	R2-58
	H. R. Hopkins	R2-58	S. L. Swaney	S7-24
	K. J. Hull	T4-07	D. T. Vladimiroff	S7-20
	N. W. Kirch	R2-11	MRK LB	

Saltwell pumping of Tank 241-SX-104 began on March 19, 1998, and continued until March 21, 1998, when a plugged transfer line shutdown pumping after only 513 gallons of waste was transferred. Saltwell pumping was restarted on July 23, 1998, and continued until July 27, 1999, when the rear seal of the jet pump ruptured and a major spray leak ensued within the pump pit. A total of 115,126 gallons of liquid waste was transferred to 241-SY-102 before the failure occurred. Waste volume calculations show 47,700 gallons of drainable interstitial liquid remaining in the tank, of which 43,600 gallons is estimated to be pumpable. Video observation reveals there is no supernatant liquid remaining. *Tank Farm Facility Interim Stabilization Evaluation*, HNF-IP-0842, Volume IV, Section 4.1, requires a jet pumped waste tank contain less than 50,000 gallons of drainable interstitial liquid, less than 5000 gallons of supernatant liquid, and achieve a maximum pump out or in-flow rate of 0.05 gpm for interim stabilization. A single-shell waste tank can be declared interim stabilized by major equipment failure by meeting the drainable interstitial liquid and supernatant quantities, but without meeting the 0.05 gpm criteria. Tank 241-SX-104 meets the criteria for interim stabilization due to major equipment failure.

Historical data from stabilized single-shell tanks in SX-farm (241-SX-106 and 241-SX-109) with pumpable liquid remaining, show an average of 29,000 gallons of pumpable liquid will remain in the tank once the stabilization criteria has been fulfilled. The hydraulic properties of waste tanks in SX-farm are similar and indicate that achieving zero pumpable liquid in 241-SX-104 is not likely. Therefore, a remaining pumpable volume of 29,000 gallons will be assumed for the following calculations in this evaluation.

If repairs at 241-SX-104 were completed, the time to pump the remaining liquid from the tank is dependent upon the flow rates of the liquid wastes into the saltwell screen. The current flow rate of liquid into the saltwell screen at 241-SX-104 is calculated at 0.14 gpm, or 202 gpd. By observation, the flow rate of liquid into the saltwell screen will decrease as the interstitial liquid level drops. Therefore, to determine the estimated time to pump 241-SX-104, an average rate of 0.09 gpm (130 gpd) at 50% operating efficiency is assumed. Using this rate and efficiency, the time to remove the pumpable liquid to 29,000 gallons in tank 241-SX-104 is 32 weeks. Over this period, numerous system and transfer line flushes would be required to prevent the typical plugging seen with 241-SX-104. The transfer line hold up volume of 360 gallons necessitates large flushes. For example, from July 22, 1999, to July 28, 1999, a total of 714

gallons of flush water and 1157 gallons of dilution water were required to maintain the transfer system operable. During this time a total of 1176 gallons of waste was pumped. If pumping were restarted, this would result in an addition of 60,400 gallons (22,800 gallons flush water + 37,600 gallons dilution water) to the waste stream to remove the estimated 14,600 gallons (43,600 gallons – 29,000 gallons) of pumpable liquid from 241-SX-104. The volume of liquid to be pumped over the projected amount of time does not warrant generation of waste in the form of flush and dilution waters.

To facilitate the replacement of the failed jet pump, the pump pit cover plate at 241-SX-104 would have to be removed and workers would be required to work over the open pit. Radiological survey IS-000926 was conducted on July 31, 1999, to determine the current dose rate of the pump pit. This survey revealed 900 mrem/hr at the valve handle penetrations and a maximum reading of 5 rem/hr at the jet pump location. Before the pump assembly can be replaced, extensive preparation of the pump pit is required to minimize the spread of contamination. The work to remove cover blocks, prepare the pump pit, add shielding, and replace the pump assembly is estimated to take 12 hours (10 prep + 2 hours work), per worker. A total exposure of 16,149 mrem is estimated for the job. This is not compliant to ALARA principles.

Costs for repair and continued operation of 241-SX-104 are based on Single-Shell Tank Interim Stabilization, Revision 3 Working Schedule. It is estimated that it would cost $76,700 to replace the equipment and meet waste disposal costs at 241-SX-104. If repairs were made and pumping was restarted, the project expenses to calibrate and maintain the current equipment at 241-SX-104 for the projected 32 week pumping schedule is estimated to cost $185,900. Since further tanks are being pumped in SX-complex, separate personnel are not required to staff SX-farm. Therefore, there are no additional personnel costs associated with continued pumping. The total project cost for restart and continued operation is $262,600.

Based upon the remaining amount of pumpable liquid, ALARA principles, and cost concerns, it is recommended that tank 241-SX-104 be declared interim stabilized on the basis of major equipment failure as defined by *Tank Farm Facility Interim Stabilization Evaluation* procedure, HNF-IP-0842, Volume IV, Section 4.1.

Michael R Koch

Michael R. Koch, Manager
Interim Stabilization Engineering

HR Hopkins, Manager, Plant Engineering

Signature HR Hopkins Date 4/19/00

C. DeFigh-Price, Manager, Process Engineering

Signature MWKuel for CDP. Date 4/18/00

SLS/lsc

Single-Shell Tank Interim Stabilization Evaluation Form

TANK: **241-SX-105**

(Jet Pumping only) Reason for stopping jet pumping:

[x] Meets 0.05 gpm criteria, Date of Shutdown ____4/25/01_____

[ ] Major equipment failure, Date of Shutdown _____

Tank Waste Surface Level Condition and Comments: _____ SEE DESCRIPTION PAGE 2 _____

Evaluation: (See continuation page for calculations and additional comments)

Photo/video review completed - Date of most recent photo/video _____05/16/02_____

[x] Tank history, temperature profile and intrusion reviews completed and no anomalies identified

Starting Liquid Level ___ 238.0" _____ Method ____ENRAF_____ Date ___08/08/00___
Final liquid level _____ 91.2" _____ Method _____LOW_____ Date ___07/28/02___
Total Net Pumped Volume ____152.6 Kgal_____
Capillary Height Used in Calculation ___6"____
Final Solids Volume _____337.5 Kgal_____
Final Average Flow rate _____0.039 gpm_____
Calculated Porosity _____0.196 _____
Supernatant Volume Remaining ____ 0 gal ___
Drainable Interstitial Liquid _____38.5 Kgal_____
Drainable Liquid Remaining _____38.5 Kgal____
Pumpable Liquid Remaining ____ 34.5 Kgal_____

[ ] Justification letter attached (Interim Stabilization System Engineer)

Disposition of Tank:

[x] Tank Interim Stabilized
[ ] Tank Not Interim Stabilized; Re-start Pumping

Evaluation prepared by SST System Engineer: JM Doeler JFR 8/1/02 Date 8/1/02

Evaluation checked by Process Control Engineer: VC Boyles Date 8/1/02

Interim Stabilization System Engineer: [signature] Date 8/1/2K2

APPROVED BY:

Manager, Interim Stabilization Engineering T.M. Horner Date 8/1/02

Manager, Process Engineering [signature] Date 8/6/02

Manager, SST Engineering [signature] Date 8/1/02

Single-Shell Tank Interim Stabilization Evaluation Form (cont.)

EVALUATION CALCULATIONS AND COMMENTS:

TANK: **241-SX-105**

The surface of 241-SX-105 is a rough, yellowish gray saltcake waste with an irregular surface of visible cracks and shelves that were created as the surface was dried out by saltwell pumping. The waste surface appears to be dry and shows no standing water within the tank. A small gap around the newer saltwell screen, near the center of the tank, also shows no evidence of supernatant liquid. There are no large depressions in or around the center of the tank. The original LOW, visible in the video, failed near the beginning of pumping and is seen sheared in half. The dome suspended portion and waste intruding portion are now separated by approximately 3 feet ~~as~~ due to the waste slumping. VCB 8/1/02 The waste surface slopes gradually from the tank sidewall to the center of the tank. The ENRAF is located 29.5 feet from the tank sidewall and reads 144.9 inches. Since the slope is negligible compared to the tank diameter, the surface will be assumed flat for this evaluation. Liquid observation well (LOW) readings indicate an interstitial liquid level (ILL) of 91.2 inches. Since there are no current dip tube readings, the LOW, adjusted for capillary height will be used for these calculations. All levels are based off the centerline of the tank's dished bottom. Calculations do not take into account any retained gas within the waste.

DATA

Final LOW Reading (07/28/02) = 91.152 inches ~ 91.2 inches

Final ENRAF Reading (07/31/02) = 144.86 inches ~ 144.9 inches

Initial Liquid Level at Start of Pumping (08/08/00) = 237.95 inches ~ 238.0 inches

Divergence point = ENRAF Level when Supernatant exhausted (ENRAF 10/24/00) = 157.94 inches ~ 157.9 inches

Height of Sludge Layer (65 Kgal) above bottom = 31.8 inches **

Tank Dished Bottom Volume (Lower 14.9" Height) = 18,500 gallons **

Supernatant Volume (05/16/02 In-Tank Video Estimate) = 0 gallons

CALCULATIONS

Porosity = Net waste pumped (since 10/24/00)/[(Divergence point – final LOW level)*2750 gal/in]

D.I.L. = Drainable Interstitial Liquid **
= {[(Final LOW Reading – Sludge Ht.) – (6" Capillary Ht.)]* 2750 gal/in}* porosity + (Sludge Volume)*porosity

D.L.R. = Drainable Liquid Remaining **
= D.I.L. + supernatant liquid

P.L.R. = Pumpable Liquid Remaining **
= D.L.R. – [((18" Unpumpable Ht – 14.9")* 2750 gal/in + 18,500 gallons) * porosity]

**Reference HNF-2978, Rev. 2
@@Reference HNF-EP-0182-170

Evaluation Prepared by JM Doeler JFR 8/1/02 Date 8/1/02

Evaluation Checked by VC Boyles SJS 8/1/02 Date 8/1/02

Single-Shell Tank Interim Stabilization Evaluation Form (cont.)

EVALUATION CALCULATIONS AND COMMENTS:

TANK: **241-SX-105**

POROSITY:

Porosity = Net waste pumped (since 10/24/00)/ [(Divergence point – final LOW level) *2750 gal/in]

= (35,870 gallons) / [(157.9" – 91.2") * 2750 gal/in] *100% = 19.6%

Due to LOW failure, the divergence point for this evaluation has been determined using the ENRAF level and average daily net pumping rates. Normal divergence determination involves a comparison of the LOW and ENRAF levels vs. net waste pumped to identify the point at which interstitial liquid pumping began. Additionally, average daily net pumping may be used to determine divergence as the flow rate will decrease significantly once the supernatant supply has been exhausted and interstitial liquid pumping has commenced. The net volume of pumped interstitial liquid compared to the change in LOW level from the divergence point to the end of pumping will determine overall tank waste porosity.

Near the beginning of the saltwell campaign for 241-SX-105, the LOW failed due to slumping and shifting of the waste surface. Pumping operations continued without an operable LOW from 8/15/00 to 7/17/01. During this time, the supernatant liquid and a large portion of the interstitial liquid were removed from the tank. Since the LOW data was unavailable, a review of average daily net pumping rates was performed to determine the divergence point. The divergence point was pin pointed to have occurred on 10/24/00 as the average daily pumping rated decreased from approximately 1.8 gpm to 0.8 gpm over a period of four days starting on 10/20/00. Therefore, the net waste pumped value, used to determine porosity, will include the net waste pumped from 10/24/00 to 4/25/01. This value is 39,309 gallons of net waste minus 3,439 gallons of flush water additions or 35,870 gallons.

LOW BASIS:

(Note: The lower 31.8" (65,000 gallons) of the tank volume is sludge @ 15% porosity – Ref. HNF-2978)

DIL = [(91.2" – 31.8" – 6") * 2750 gal/in] * 0.196 + (65,000 gal * 0.15)

= [(146,850 * 0.196) + 9750 gal] = 38,533 gallons (38.5 Kgal)

DLR = DIL + Supernatant = 38,533 gallons + 0 gallons = 38,533 gallons (38.5 Kgal)

PLR = DLR – [[(18" – 14.9") * 2750 gal/in + (18,500 gal)]* 0.15]

= 38,533 gal – [(27,025 gal)*0.15] = 38,533 - 4054 = 34,479 gallons (34.5 Kgal)

Evaluation Prepared by JM Dacler VFR 8/1/02 Date 8/1/02

Evaluation Checked by VC Boyles SJS 8/1/2002 Date 8/1/02

Single-Shell Tank Interim Stabilization Evaluation Form (cont.

EVALUATION CALCULATIONS AND COMMENTS:

TANK: **241-SX-105**

SOLIDS VOLUME:

The waste surface level of 241-SX-105 is 144.9 inches (ENRAF level). The waste slopes gradually towards the center of tank where two saltwell screens are installed. The waste surface is uneven and rough, with many cracks and shelves due to pumping. However, the waste surface is approximately level from the tank sidewall to the installed saltwell screens. Therefore, for the purpose of this evaluation, the solids volume will include an evaluation of the upper surface (assumed flat) and the lower dish volume. These volumes are then added together to obtain the total volume as follows:

Volume (upper) = [Vol. of (144.9 in – 14.9 in) * 2750 gal/in] = 357,500 gallons

Volume (Dish) = 18,500 gallons

Volume (Tot) gallons = 357,500 + 18,500 = 376,000 gallons = 376.0 Kgal

Solids Volume remaining = Volume (tot) – Drainable Liquid Remaining (DLR)

= 376,000 gals – 38,533 gals = 337,467 gallons = 337.5 Kgal

FLOW DATA:

The final pump rate is found by data obtained from 0130 April 25th to 1130 April 25th, 2001 that show a total of 28 gallons of waste were pumped over the time period of 720 minutes (12.0 hours), while the pump ran in AUTOMATIC mode. These data were taken during the final shift of pumping operations on SX-105 before the pump was shutdown for stabilization review at 1707 on April 25th, 2001. Pumping of 241-SX-105 had been nearly continuous (97.2% operational) since 2220 hours on April 19th for 133 hours of operation in AUTOMATIC mode (except for a brief period of operation in BYPASS and MANUAL modes). All data were taken after the final saltwell screen flush on April 24th. The following equation shows the pumping rate for this final pump run:

Pump Rate = [28 gallons/720 minutes] = (0.039 gpm)

All record calculations for this evaluation, as well as other information may be found in the tank history file, per HNF-IP-0842, Vol. 4 Section 4.1, paragraph 3.4.1.

Evaluation Prepared by [signature] JFR 8/1/02 Date 8/1/02

Evaluation Checked by VC Boyles GS 8/1/02 Date 8/1/02

TANK: **241-SX-106**

(Jet Pumping only) Reason for stopping jet pumping:

[x] Meets 0.05 gpm criteria, Date of Shutdown ____12/21/99_____

[ ] Major equipment failure, Date of Shutdown _____

Tank Waste Surface Level Condition and Comments: _____ SEE DESCRIPTION PAGE 2 _____

Evaluation: (See continuation page for calculations and additional comments)

Photo/video review completed - Date of most recent photo/video _____01/26/00_____

[x] Tank history, temperature profile and intrusion reviews completed and no anomalies identified

Starting Liquid Level ___ 197.8"_____ Method ____ENRAF_____ Date ___10/07/98_____
Final liquid level _____ 63.0" _____ Method ____DIP TUBES____ Date ___04/21/00_____
Total Net Pumped Volume ____133.0 Kgal_____
Capillary Height Used in Calculation ___0"____
Final Solids Volume _____359.4 Kgal_____
Final Average Flow rate _____0.012 gpm_____
Calculated Porosity _____0.247_____
Supernatant Volume Remaining _____ 0 gal ____
Drainable Interstitial Liquid _____37.2 Kgal_____
Drainable Liquid Remaining _____37.2 Kgal____
Pumpable Liquid Remaining ____ 30.6 Kgal_____

[ ] Justification letter attached (Interim Stabilization Cognizant Engineer)

Disposition of Tank:

[x] Tank Interim Stabilized
[ ] Tank Not Interim Stabilized; Re-start Pumping

Evaluation prepared by SST Cognizant Engineer: J M Dooley Date 5/2/2000

Evaluation checked by Process Engineer: V C Boyles Date 5/2/2000

Interim Stabilization Cognizant Engineer: Stephen L Swan Date 5/1/2000

APPROVED BY:

Manager, Interim Stabilization Engineering [illegible] Date 5/2/2000

Manager, Process Engineering MWK for C. Defligh-Price Date 5/2/2000

Manager, SST Engineering R E Larson Date 5/2/2000

Single-Shell Tank Interim Stabilization Evaluation Form. (cont)

EVALUATION CALCULATIONS AND COMMENTS:

TANK: **241-SX-106**

The surface of 241-SX-106 is a smooth, white colored saltcake waste. The surface level slopes slightly from the tank sidewall down to a large depression in the center of the tank. The depression is estimated to be 27.3 feet in radius and approximately 7 feet deep based on the visible portion of the saltwell screen and ENRAF readings. A second depression with radius of 17 feet surrounds both saltwell screens and an abandoned LOW. The ENRAF probe is located approximately 3 feet within the depression and is reading 104.3 inches, approximately 1 foot below the upper depression surface. The waste surfaces appear dry and show no standing water within the tank. There is no evidence of supernatant liquid from video observations. Liquid observation well (LOW) readings indicate an average adjusted interstitial liquid level (ILL) of 66.2 inches. This value was obtained by adjusting the previous 7 weeks of data for changes in barometric pressure. Dip tube readings are located at the tank center and report an adjusted liquid surface level of 63.0 inches. This level is based on elevation & fabrication drawings that show the dip tubes installed 4 inches above the tank bottom. This, coupled with the pump assembly being blocked up on 8-inch by 8-inch railroad ties, yields a net rise of 12 inches in elevation. All levels are based off the tank centerline dished bottom.

For the purposes of this evaluation, the dip tube readings will be used to determine the final quantities of drainable and pumpable liquid in tank 241-SX-106. To calculate drainable interstitial liquid (DIL) using dip tubes, capillary height may not be subtracted in the equation per RPP-5556, Rev. 0. This is due to there being no waste above the liquid in the saltwell screen to retain liquid through capillary forces.

DATA

LOW Reading (average) = 66.226 inches ~ 66.2 inches

ENRAF Reading (04/19/00) = 104.28 inches ~ 104.3 inches

Dip Tube Reading (04/21/00) = 50.97 inches + 12 inches (distance off tank bottom)
= 62.97 inches ~ 63.0 inches

Initial Liquid Level from 9/1/99 (ENRAF and LOW divergence point) = 109.1inches

Porosity = Waste pumped since 9/1/99 / [(Initial liquid level – final liquid level)*2750 gal/in]

Tank Dished Bottom Volume (Lower 14.9" Height) = 18,500 gallons **

Supernatant Volume (01/26/00 In-Tank Video Estimate) = 0 gallons

D.I.L. = Drainable Interstitial Liquid ##
= [(Saturated Solids Ht. – 14.9") + 18,500 gal – (0" Capillary Ht.)]* 2750 gal/in * porosity

D.L.R. = Drainable Liquid Remaining **
= D.I.L. + supernatant liquid

P.L.R. = Pumpable Liquid Remaining **
= D.I.L. – [(18" Unpumpable Ht. – 14.9")* 2750 gal/in + 18,500 gallons]* porosity

**Reference HNF-2978, Rev. 1
##Reference RPP-5556, Rev. 0

Evaluation Prepared by JM Doeler SLS Date 5/2/2000

Evaluation Checked by VC Boyles Date 5/2/2000

EVALUATION CALCULATIONS AND COMMENTS:

TANK: **241-SX-106**

POROSITY:

Porosity = Waste pumped (since 9/1/99) / [(Initial liquid level – final liquid level) *2750 gal/in]

= 29,186 gallons / [(109.1" – 66.2") * 2750 gal/in] = 24.7%

DIP TUBE BASIS:

DIL = [(63.0" – 14.9") * 2750 gal/in + 18,500] * 0.247

= [(132,275 + 18,500) * 0.247] = 37,241 gallons (37.2 Kgal)

DLR = DIL + Supernatant = 37,241 gallons + 0 gallons = 37,241 gallons (37.2 Kgal)

PLR = DIL – [(18" – 14.9") * 2750 gal/in + 18,500 gallons]* 0.247

= 37,241 – (27025 * 0.247) = 37,241 - 6675 = 30,565 gallons (30.6 Kgal)

SOLIDS VOLUME:

The upper waste surface level (~198") is consistent and level across the tank. Several depressions exist and are centered on the two central saltwell screens. The first depression has a radius of approximately 27.3 feet and a depth to near 117". The second depression has a radius of approximately 17 feet to a depth of 104.3 inches (from ENRAF). A third, small depression exists between the saltwell screens, but is neglected in this calculation. Since the slope of waste from the tank sidewall to the first depression edge is small compared to the area of waste, it is assumed to be flat for this calculation. All slopes within the two depressions are neglected. Each depression is assumed to be a right circular cylinder. The waste volumes of each area were calculated as follows:

Volume (upper surface) = [Vol. of (198" – 117)* 2750 gal/in] – Vol. of depression (right circular cylinder)

= (198" – 117") * 2750 gallons/in - (pi) *(27.3 ft.)^2 * (6.75 ft.) * 7.481 gal/ft^3

= 222,750 gallons – 118,250 gallons = 104,500 gallons

Volume (middle surface) = [Vol. of (117" – 104.3)* 2750 gal/in] – Vol. of depression (right circular cylinder)

= 34,900 gallons – 7200 gallons = 27,700 gallons

Volume (Tot) = Vol. (upper) + Vol. (middle) + Vol. (104.3" to 14.9" * 2750) + Vol. dish bottom (lower 14.9")

Volume (Tot) = 104,500 gals + 27,700 gals + 245,900 + 18,500 gals = 396,600 gallons

Solids Volume remaining = Volume (tot) – Drainable Liquid Remaining (DLR)

= 396,600 gals – 37,200 = 359,400 = 359.4 Kgal

Evaluation Prepared by JM Doeler SLS Date 5/2/2000

Evaluation Checked by VC Boyles Date 5/2/2000

EVALUATION CALCULATIONS AND COMMENTS:

TANK: **241-SX-106**

FLOW DATA:

The final pump rate is found by data obtained from 0428 to 1456 on December 21, 1999. These data were taken after the final saltwell screen flush on December 20th and show a total of 12 gallons of waste were pumped over the time period of 17 hours, while the pump ran in AUTOMATIC mode. The following equation shows the pumping rate for this final pump run:

Pump Rate = [12 gallons/1028 minutes] = (0.012 gpm)

The in-flow rate of the saltwell screen was also analyzed with a plot of the refill rate of the saltwell screen versus time. The refill of the saltwell screen, as reported by the saltwell system DTAM, began at a weight factor transmitter (WFT) level of 6.8 inches (4.9 inches adjusted for specific gravity) @ 1340 on December 20th. The refill rate continued to be steady until a point at 2146 on December 20th. At this time, the DTAM reported the WFT level in the screen as 34.4 inches (24.6 inches adjusted). A typical 10 inch diameter saltwell screen will hold 0.34 gallons/inch. The following equation calculates the final in-flow rate:

In-Flow Rate = [((24.6 inches – 4.9 inches) * 0.34 gallons/inch)/486 minutes]

= 6.7 gallons/486 minutes = (0.014 gpm)

Evaluation Prepared by JM Daeler SLS Date 5/2/2000

Evaluation Checked by VC Boyles Date 5/2/2000

INTERIM STABILIZATION EVALUATION

TANK NUMBER: 107-SX

EFFECTIVE DATE: 10-19-79

LIQUID LEVEL & RISER NO. Manual Tape R-2 43.25"

This is a solids level reading.

SOLIDS LEVEL & RISER NO.: ** R-2 43.25"
Riser Unknown 44.75"

**This one inch variation is due to the slope of the solids.

EST. SUPERNATE LIQUID VOLUME 0

EST. DRAINABLE INTERSTITIAL LIQUID VOLUME *14,000 Gallons

This volume is based on sludge containing 12.5% by volume drainable interstitial liquid

TEMPERATURE: Maximum 180°

IS TANK HEAT LOAD A PROBLEM?

yes + X no ____ unknown ____

+This temperature would only become a problem if the SX-sludge cooler was discontinued.

IS THERE A POTENTIAL DOME LOAD PROBLEM? yes ____ no X

PHOTOGRAPH EVALUATION: (Order #776893 ; L.L. 44.0" ; Date 8-5-77)
This surface is 100% dry solids. This set of photographs was compared to a set taken in 1970. Since the earlier photographs the small liquid puddles have dried completely.

COMMENTS: *The 14,000 Gallons of interstitial liquid does not take into account any liquid that has been removed by the SX-sludge cooler.

ADVANCED STABILIZATION RECOMMENDATIONS: Continue the operation of the sludge cooler to maintain the tank temperature and remove more interstitial liquid.

Prepared By: H. Dennis Mangan

Prepared By: John H. Bailey 10-19-79

INTERIM STABILIZATION EVALUATION

TANK NUMBER: 108-SX

EFFECTIVE DATE: 8-31-79

LIQUID LEVEL & RISER NO. R-2 47.25"

SOLIDS LEVEL & RISER NO. R-2 47.25".

EST. SUPERNATE LIQUID VOLUME 0

EST. DRAINABLE INTERSTITIAL LIQUID VOLUME 14,000 gallons

This figure is based on sludge being 12.5% drainable interstitial liquid.

TEMPERATURE: Maximum 235°F

IS TANK HEAT LOAD A PROBLEM?

yes * X no ____ unknown ____

* This temperature is not a serious problem as long as the SX sludge cooler continues to operate.

IS THERE A POTENTIAL DOME LOAD PROBLEM? yes ____ no X

PHOTOGRAPH EVALUATION: (Order # 776539: Liquid Level 47.25 ; "Date 7-26-77)

The surface is 100% dry cracked solids. The manual tape is touching on solids. There is an old tape in the area where the manual tape touches. There is some sediment on the stiffener rings.

COMMENTS: There is an excellent photographic history of this tank beginning in March of 1968. The photographs were taken after pump down and there are pools of liquid remaining. Photographs taken in 1969, 70, 71, 72, 74, 76 and 77 show the solid surface getting continuously dryer. Today there is no liquid visible on the surface. The sludge is showing some cracks from drying.

Prepared By: V. Dennis Maupin 8-22-79

Reviewed By: John M Bailey 8-23-79
Advanced Stabilization

Recommendation: Continue the operation of the sludge cooler.

Figure 4. Interim Stabilization Evaluation of 100- & 200-Series Non-Jet-Pumped Tanks. (sheet 1 of 2)

Page 1 of 3

TANK: 241-SX-109

EVALUATION (see continuation page for calculations and additional comments):

(✓) Photograph review completed - Date of most recent photographs: 5/21/86

(✓) Tank history review completed: SEE TANK HISTORY FILE

(✓) Tank temperature profile review completed SEE CASS FOR DATA.

Surface Condition & Comments: A VERY IRREGULAR, DRY SURFACE IS VISIBLE IN PHOTOS FROM 1986. NO VISIBLE LIQUIDS. SOLIDS FORM MOUNDS OVER FOUR BOTTOM-MOUNTED AIR-LIFT CIRCULATORS, AND VARIOUS PIPES THAT ENTER THE SOLIDS ARE CAKED WITH ENCRUSTATIONS. COLORS RANGE FROM YELLOW TO GRAY TO NEARLY BLACK.

Solids Level 96" Date 5-21-86 Method MANUAL TAPE

Liquid Level 96" Date 5-21-86 Method MANUAL TAPE

Solids Volume 244,450 GALLONS

Estimated Drainable Insterstitial Liquid Remaining Volume 47,900 GALLONS (DIL)

Estimated Supernatant Volume Remaining ZERO GALLONS

Tank was pumped with a submersible pump ___ Yes ✓ No; if yes, _____ gallons pumped.

(✓) Cost/Benefit Analysis attached

DISPOSITION OF TANK:

(✓) Tank Interim Stabilized at ZERO gallons of supernatant and 47,900 gallons of drainable interstitial liquid

( ) Tank not Interim Stabilized; continue stabilization activities

Evaluation Performed by D.D. Simmons Date 12/30/91 Checked by J. C. [illegible] Date 12/30/91

APPROVED BY:

Manager, Single Shell Tanks V.C. Boyles Date 12/30/91

Manager, Single Shell Tanks Technology R.E. Raymond Date 1-2-92

Manager, Facility Operations [illegible] Date 1/27/92

DISTRIBUTION: Tank Farm Surveillance Analysis, SST Tank History File, Nuclear Facility Safety, TPA Integration Control, Managers Approval; Evaluation Performer, and Checker signatures.

Figure 4. Interim Stabilization Evaluation (sheet 2 of 2)

EVALUATION CALCULATIONS AND COMMENTS:

TANK: 241-SX-109

NOTES: THIS TANK REMOVED FROM SERVICE: 1965
DECLARED CONFIRMED LEAKER: 1965
CLASSIFIED INTERIM STABILIZED: MAY 1981, 1984
INTERIM ISOLATED: SEPTEMBER 1982
ONE MILLION GALLON SINGLE-SHELL TANK
WITH DISH BOTTOM (CONSTR: 1954)
USE MOST CONSERVATIVE ESTIMATE OF POROSITY; 45% (SALT CAKE)
SURFACE LEVEL MEASURING METHOD IS REFERENCED TO THE BOTTOM OF THE TANK.

1) VOLUME OF WASTE, TOTAL:
VOL. = VOL. OF CYLINDER (RADIUS OF TANK, AND HEIGHT OF SURFACE LEVEL - DISH DEPTH) + DISH VOLUME.

VOLUME OF CYLINDER = π (TANK RADIUS)^2 (SURFACE LEVEL - DISH DEPTH) -

SURFACE LEVEL = 96 IN.
RADIUS = 37' 6 1/2" SEE DRWG H-2-39511 SHT 1
DISH DEPTH = 1' 2 7/8" SEE DRWG H-2-39511 SHT 1

$$\text{VOLUME OF CYLINDER} = \pi\,(37'6\tfrac{1}{2}'')^2\left[(96\text{ IN} - 14\tfrac{7}{8}\text{ IN})\,\frac{1\text{ FT}}{12\text{ IN}}\right] = 29{,}933\ \text{FT}^3 = 223{,}914\ \text{GALLONS}$$

$1\text{ FT}^3 = 7.4805$ GALLONS

$$\text{VOLUME OF DISH} = \frac{1}{6}\pi h(h^2+3a^2)$$

CRC STANDARD MATHMATICS TABLE, 14TH EDITION, 1965

WHERE h = DISH DEPTH = 1' 2 7/8"
a = TANK RADIUS = 37' 6 1/2"

$$\text{VOL OF DISH} = \frac{1}{6}\pi\left(14.875\text{ IN}\,\frac{1\text{ FT}}{12\text{ IN}}\right)\left[\left(14.875\text{ IN}\,\frac{1\text{ FT}}{12\text{ IN}}\right)^2 + 3\left(37.5416\overline{67}\text{ FT}\right)^2\right]$$

$$= 2{,}745\ \text{FT}^3 = 20{,}536\ \text{GALLONS}$$

VOLUME OF TOTAL WASTE = 223,914 GALLONS + 20,536 GALLONS
= 244,450 GALLONS

Calculations made by_____ Date_____

Checked by_____ Date_____

Figure 4. Interim Stabilization Evaluation
(sheet 2 of 2)

EVALUATION CALCULATIONS AND COMMENTS:

TANK: 241-SX-109

2) DRAINABLE INTERSTITIAL LIQUID (DIL):

CORE SAMPLING DONE IN JAN 1988 SHOWS THAT THERE IS NO INTERSTITIAL LIQUID IN THE TOP 38 INCHES (SEE TANK HISTORY FILE). DIL CALCULATIONS WILL NOT INCLUDE THESE TOP 38 INCHES.

DIL = (TOTAL WASTE VOLUME - DRY SOLIDS - CAPILARY HEIGHT VOL) POROSITY

DRY SOLIDS $= \pi (37.5416667)^2 FT^2 (38 IN \frac{1 FT}{12 IN}) = 14,021 FT^3$
$= 104,884$ GALLONS

CAPILARY HEIGHT VOL $= \pi (37.5416667 FT)^2 \ 1 FT = 4,428 FT^3 = 33,121$ GALLONS

DIL = (244,450 GALLONS - 104,884 GALLONS - 33,121 GALLONS) 0.45
= 47,900 GALLONS

3) DRAINABLE LIQUID REMAINING (DLR) = DIL + SUPERNATANT
= 47,900 GALLONS + 0 = 47,900 GALLONS

4) PUMPABLE LIQUID REMAINING (PLR) = DLR - REMAINING DRAINABLE LIQUID AFTER JET PUMPING
= 47,900 GALLONS - 22,500 GALLONS (AVERAGE): SEE RHO-CD-925, REV. 2, PAGE 3.
= 25,400 GALLONS

NOTE: THIS PAPERWORK IS A RESUBMITTAL BECAUSE ORIGINAL INTERIM STABILIZATION EVALUATION IS MISSING.

Calculations made by _____ Date _____

Checked by _____ Date _____

INTERIM STABILIZATION EVALUATION

TANK NUMBER: 110-SX EFFECTIVE DATE: 8-31-79

LIQUID LEVEL & RISER NO. R-2 28.25" This is a solids level reading

SOLIDS LEVEL & RISER NO. Riser # unknown- 28.75
R-2 28.25

EST. SUPERNATE LIQUID VOLUME 0

EST. DRAINABLE INTERSTITIAL LIQUID VOLUME 8,000 gallons*

* This volume estimate assumes sludge contains 12.5% drainable interstitial liquid by volume

TEMPERATURE: Max 189°F Probe #3
Min 119°F Probe #1

IS TANK HEAT LOAD A PROBLEM?

yes X* no ____ unknown ____

* These temperatures do not pose a problem as long as this tank is cooled by the SX sludge cooler.

IS THERE A POTENTIAL DOME LOAD PROBLEM? yes ____ no X

PHOTOGRAPH EVALUATION: (Order #776538 ; LL 28.25" ; 7-26-77)

The surface is 99% dry sludge. There is one small patch of liquid at the base of an airlift circulator. The manual tape is touching on solids. There is debris from broken tapes., sludge weights and broken airlift circulator lines evident. There are a number of objects on the sludge surface. These are believed to be bottles of plutonium waste.

COMMENTS:

This tank meets the criteria set forth in RHO-CD-330 for interim stabilization. Another reference used in evaluating this tank was RHO-CD-756 "Evaluation of Special Tanks".

ADVANCED STABILIZATION RECOMMENDATIONS: Continue the use of the sludge cooler to control tank temperatures.

Prepared By: V. Dennis Mangin 8-22-79

Reviewed By: John M. Bailey 8-22-79

INTERIM STABILIZATION EVALUATION

TANK NUMBER: 111-SX EFFECTIVE DATE: 7-31-79

LIQUID LEVEL INTERSTITIAL R-2 50"

SOLIDS LEVEL & RISER NO. - Riser # Not Available 50"

EST. SUPERNATE LIQUID VOLUME 50 gallons*

EST. DRAINABLE INTERSTITIAL LIQUID VOLUME 10,000 gallons**

TEMPERATURE: Max 205° F Min 105° F

IS THIS TEMPERATURE A PROBLEM?

yes x*** no ____ unknown

*** This tank is presently being air cooled by the SX Farm sludge cooler to maintain temperature within acceptable limits.

IS THERE A POTENTIAL DOME LOAD PROBLEM? yes ____ no x

* PHOTOGRAPH EVALUATION: (Order #85024 ; LL 4'2" ; 1-3-79)

The surface is 99% dry solids. There is a very small amount of liquid showing at the base of one airlift circulator.

** COMMENTS: It is estimated that 10,000 gallons of drainable interstitial liquid remain in this tank. This estimate is based on the assumption that sludge contains 12.5% by volume of drainable interstitial liquid. The 10,000 gallon figure is less than 12.5% of the sludge volume by 6000 gallons. This is due to P-10 pumping which is estimated to have removed 6000 gallons of drainable interstitial liquid. The continued operation of the SX Farm sludge cooler will further reduce the remaining drainable liquid volume.

Prepared By: V. Dennis Maupin

Reviewed By: Glen H. Bailey 7-31-79

INTERIM STABILIZATION EVALUATION

TANK NUMBER: 112-SX EFFECTIVE DATE: 7-31-79

LIQUID LEVEL INTERSTITIAL: R-2 38.5"

SOLIDS LEVEL & RISER NO.: R-2 38.5" Riser Unknown 43.5"

EST. SUPERNATE LIQUID VOLUME: 0*

EST. DRAINABLE INTERSTITIAL LIQUID VOLUME: 13,000 gallons*

** This figure assumes the entire tank contents consists of sludge and the drainable liquid is 12.5% of the total sludg volume.

TEMPERATURE: Max 132° F*** Min 100° F

IS THIS TEMPERATURE A PROBLEM?

yes ____ no X*** unknown

*** This temperature doesn't appear to be a problem. This tank is currently on the sludge cooler.

IS THERE A POTENTIAL DOME LOAD PROBLEM? yes ____ no X

* PHOTOGRAPH EVALUATION: (Order #752802 : LL 3' 7 1/2" ; 5-2-75)

In these four year old pictures there are small isolated puddles of liquid scattered across the surface. The surface is approximately 95% dry solids. These photos were compared to a set taken 1 year earlier and the SX Farm sludge cooler had evaporated approximately 90% of the surface liquid present in the earlier pictures during that one year period.
Four years have elapsed since the most recent photographs and it is assumed that all surface liquid has been evaporated during this period.

COMMENTS:

The continued operation of the SX Farm sludge cooler will further reduce the remaining drainable liquid volume.

Prepared By: V. Dennis Mauser

Reviewed By: John M. Bailey 7-31-79

INTERIM STABILIZATION EVALUATION
PAGE 2

ADVANCED STABILIZATION
RECOMMENDATIONS

Continue to operate the SX Farm sludge cooler to control tank temperatures and further reduce the drainable interstitial liquid volume remaining in this tank.

INTERIM STABILIZATION

TANK: 113-SX Effective Date: 11-30-78.

Temperature: 94°F max 78°F min

Sample Required: yes ☐ NO ☒

Photo Evaluation: yes ☒ NO ☐

COMMENTS: TANK 241-SX-113 has been changed from Leaker-primary stabilized-partially isolated to Leaker-Interim stabilized-partially isolated.

The temperature and photo-evaluation sheets are attached to the form. Tank 113-SX has not been on the sludge cooler, and the in tank temperatures have remained below 95°F. This figure is well within the 250°F figure carried in the specs & standards manual for single shell tanks.

The photo evaluation indicates a dry cracked surface over the entire tank. There is less than two feet of solids present, and no sample is required for interim stabilization. Diatomaceous earth has stabilized any free surface liquid.

Tank: 113-SX

Photo Date: 4-2-76

Photo I.D: 763162

Liquid Level: 1' 2 1/4"

Observation of Surface: The tank surface is 100% dry cracked solids.

Salt Well Status: NO casing installed. There is one open hole pump standing in solids

Lollipops? ___ Yes X No

Other: The manual tape is touching on solids. The is one T.C. probe visible. There are air lift circulators and associated air lines. Also some old worn off tapes in the sludge

Interpreted by : V. D. Marvin

Date: 11-30-78

Reviewed by :

Date :

INTERIM STABILIZATION EVALUATION

TANK NUMBER: 114-SX EFFECTIVE DATE: 7-31-79

LIQUID LEVEL & RISER NO. R-2 71 25"

SOLIDS LEVEL & RISER NO. Riser # Unknown 78"

EST. SUPERNATE LIQUID VOLUME 0

EST. DRAINABLE INTERSTITIAL LIQUID VOLUME 25,000 gallons*

TEMPERATURE: Max 227° F Min 142° F

IS THIS TEMPERATURE A PROBLEM?

yes ____ no X** unknown ____

** This tank is presently connected to the SX Farm sludge cooler to maintain the temperatures within acceptable limits.

IS THERE A POTENTIAL DOME LOAD PROBLEM? yes ____ no X

PHOTOGRAPH EVALUATION: (Order Number 85025, LL 5' 11 1/4", Date 1-3-79)

The entire surface is solids. There are some areas of wet solids at the base of the air lift circulators. This set of photographs was compared to a set of photos taken on 5-1-74. The surface appears dryer in the recent photographs.

COMMENTS:

This tank is connected to the SX-Farm sludge cooler which will continue to reduce the amount of drainable liquid. There is no salt well pumping scheduled for this tank.

* This estimate assumes that 12.5% of the sludge volume is drainable interstitial liquid.

ADVANCED STABILIZATION RECOMMENDATIONS: Continue to operate SX Farm sludge cooler to control the tank temperatures and further reduce the volume of drainable interstitial liquid.

Prepared By: V. Dennis Maiger

Reviewed By: John W. Bailey 7-31-79

October 2, 1978

TO: Distribution

FROM: J. W. Bailey
Tank Farm Process Engr'g
2750-E/200-East
Ext. 221

SUBJECT: Tank Status Update

Based on a Tank Farms Process Engineering evaluation of tank photographs and/or liquid and solids level data, the following listed tanks have changed status as indicated below. Future operations and reporting should reflect these status changes. The effective date for these changes is September 30, 1978.

TANK	PREVIOUS STATUS	NEW STATUS	EST. SUPERN. LIQ. (GAL.)
241-A-104	Leaker-Primary Stab.	Leaker-Interim Stab.	-0-
241-AX-104	Inactive	Inactive-Primary Stab.	-0-
241-B-102	Active	Inactive	19,000
241-BX-101	Inactive-Primary Stab.	Inactive-Interim Stab.	-0-
241-SX-103	Active	Inactive-Primary Stab.	-0-
241-SX-105	Active	Inactive-Primary Stab.	-0-
241-SX-115	Inactive-Primary Stab.	Inactive-Interim Stab.	-0-
241-TX-107	Inactive	Inactive-Primary Stab.	1,000*
241-TX-114	Inactive	Inactive-Primary Stab.	-0-
241-TX-117	Inactive	Inactive-Primary Stab.	-0-
241-TX-105	Inactive	Inactive-Primary Stab.	-0-
241-U-105	Active	Inactive	23,000
241-U-201	Inactive	Inactive-Primary Stab.	1,000*
241-U-202	Inactive	Inactive-Primary Stab.	1,000*
241-U-203	Inactive	Inactive-Primary Stab.	1,000*
241-U-204	Inactive	Inactive-Primary Stab.	1,000*

241-TY-105

* Liquid is nonpumpable

Documentation of the engineering evaluations supporting these status changes will be maintained on file at TFPE. For further details on these evaluations contact V. D. Maupin, ext. 217.

J. W. Bailey
Tank Farm Process Engr'g

JWB/rfh

Distribution:
C. R. Carter
G. T. Dukelow
J. H. Garbrick
R. B. Langley
C. A. Petersen
R. A. Zinsli

cc:
D. R. Autery
H. A. Anderson
J. W. Bailey
C. A. Mulvey
V. D. Maupin
G. A. Olsen
T. B. Veneziano
LB

Figure 4. Interim Stabilization Evaluation of 100- & 200-Series Non-Jet-Pumped Tanks. (sheet 1 of)

Page 1 of 3

TANK: 241-T-101

EVALUATION (see continuation page for calculations and additional comments):

[X] Photograph review completed - Date of most recent photographs: 04/07/93

[X] Tank history review completed

[X] Tank temperature profile review completed

Surface Condition & Comments: Mottled brown to black in color. A pockmarked, moist sludge surface remains; surface-cracked near the outer perimeter of the tank. Approximately 3 feet of saltwell screen is not visible below the waste remaining in the center of Tank T-101. The FIC Plummet is visible contacting solids. A liquid pool is visible surrounding the Saltwel Screen. See page 2 for additional Comments.

Solids Level 24.5" / 36.25" Date 4/12/93 / 4/07/93 Method Saltwell Screen Zip-Cord / Manual Tape (flake housing)

Liquid Level 24.5" Date 4/12/93 Method Saltwell Screen Zip-cord

Solids Volume 101,200 Gallons (SEE PAGE 3: 1.A.B.2) DDW 04/07/93

Estimated Drainable Liquid Remaining(DLR) : Volume = 16,500 Gallons

Estimated Supernatant Volume Remaining 700 Gallons

Tank was pumped with a submersible pump X Yes ___ No; if yes, 25,300 gallons pumped.

[ ] Cost/Benefit Analysis attached

DISPOSITION OF TANK:

[X] Tank Interim Stabilized at 700 gallons of supernatant and 15,800 gallons of drainable interstitial liquid

[ ] Tank not Interim Stabilized; continue stabilization activities

Evaluation Performed by D. D. Wiggins Date 4/12/93 Checked by RANDY L. POWERS Date 4/14/93

APPROVED BY:

Manager, Single Shell Tanks VC Boyles Date 4/14/93

Manager, Single Shell Tanks Technology Date 4-14-93

Manager, WT Facility Operations Date 4/14/93

DISTRIBUTION: Surveillance and Data Acquisition, SE Tank History File, Nuclear Facility Safety, TPA Integration Control, Managers Approval, Evaluation Performer, and Checker signatures

Figure 2. Interm Stabilization Evaluation for Non Jet-Pumped Tanks.

page 2 of 3

EVALUATION CALCULATION AND COMMENTS:
TANK: 241-T-101

Tank 241-T-101 was declared an assumed leaker on October 4, 1992. Tank 241-T-101 was submersible pumped starting on March 12, 1993, from a measured height of 40.5 inches to a measured height of 36.25 inches (manual tape resting on solids). The "0" datum for this tank is at the bottom of the sidewall. Multiple pumping campaigns resulted in the removal of 25,300 gallons of waste. A total of four transfer line flushes, and two saltwell screen flushes resulted in the use of an additional 1670 gallons of flush water.

During the final pump campaign, completed on April 6, 1993, prior to the final transfer line flush, approximately 1.5 Rad/hr was detected near the flushing valves in the Tank 241-T-101 pump pit. This indicated the probable transfer of limited quantities of sludge into the pump pit valves. Due to ALARA concerns, and the fact that transfer line flushes were approximately equal to waste transfers, the decision was made to shut down any additional transfers.

In-Tank photographs (April 7, 1993) were used to estimate the quantity of remaining supernatant in Tank 241-T-101. Engineering estimates that 700 gallons of supernatant remains near the middle of this tank, in a roughly circular shaped pool offset from the center, seven and one half inches deep at the deepest point, and occupying no more than 10 percent of the tank waste surface area. These estimates are the result of comparing the visible size of the liquid pool to the overall size of the tank, and to objects within the tank of known dimension. The pool depth is estimated considering the gently sloping nature of the solids within this tank.

The final zip-cord measurement within the central saltwell screen indicated a liquid surface at 24.5 inches in the middle of the tank, using the same baseline as the manual tape. Tank 241-T-101 has a dish-bottomed configuration. The manual tape is located at a distance of 150 inches in from the side of the tank, and rests on a gently sloping solid waste surface. For the purposes of determining waste volumes, an average slope of the waste surface indicated by the manual tape and the zip-cord was determined to be no greater than three degrees from the horizontal. The average sloping waste height as determined by the manual tape is eight inches higher than the solid waste height based on the zip-cord reading. These factors were used to determine supernatant volumes, and to estimate the total waste volumes.

See calculations on the following page for a summary of waste volumes remaining in 241-T-101.

Calculations made by D.D. Wiggins Date 04/13/93
Checked by [signature] Date 04/14/93

Figure 2. Interm Stabilization Evaluation for Non Jet-Pumped Tanks.

EVALUATION CALCULATION AND COMMENTS:
TANK: 241-T-101

1. Volume Calculations

A. 1. Supernatant Volume* = Pool Volume =
1/3[(Pool Depth)π(Pool Radius)^2]
Pool Radius=12 ft =144 in.
Pool Depth= 144 in. (Tan 3 degrees)
7.48 Gal/cubic ft, 1728 cubic in./cubic ft.
1/3[144"(Tan 3°)(144")^2(π)= 163,870 in.^{3} = 94.8 ft^3=700 Gal.

B. 1. Total Waste Volume= Upper Waste Volume (manual tape) + Lower Waste Volume (zip-cord) + 12,500 (Dish Volume)=
*(8in.)(2,750 Gal./in.) + *(24.5 in.)(2,750 Gal./in.) +
12,500 Gal.= 101,900 Gal.

2. Solids Volume= Total Waste Vol. - Supernatant=
101,900 Gal. - 700 Gal.= 101,200 Gal.

C. Interstitial Liquids
Porosity= 45%, Capilliary Height (Sludge)= 24in.

1. Drainable Interstitial Liquid (DIL)=
[101,200 Gal. - 24(2,750 Gal./in.)] 0.45= 15,800 Gal.

2. Drainable liquid remaining (DLR)= DIL + Supernatant
15,800 Gal. + 700 Gal. = 16,500 Gal.

3. Pumpable liquid remaining (PLR)=
DLR- 0.45[18in.(2,750 Gal./in.)]=
16,500 Gal. - 22,300 Gal.= 0

* See page 2 of 3 for description of this evaluation.

Calculations made by D. D. Wiggins Date 04/13/93
Checked by [illegible] Date 04/14/93

INTERIM STABILIZATION EVALUATION - NON-JET PUMPED TANKS

Tank: 103-T

Evaluation (see Continuation Page for calculations and additional comments):

[X] Photograph review completed - Date of most recent photographs 4/2/81

[X] Tank history review completed

[X] Tank temperature profile review completed

Surface Description: A supernatant pool, estimated from photos to have an average depth of 2", covers approximately 80% of the tank surface. The rest is sludge. The FIC is contacting liquid. Date 4/2/81

Solids Level 3.85" at the edge Date 12/29/78 Method FIC

Liquid Level 5.0" Date 10/27/83 Method FIC

Solids Volume 22,500 gal

Estimated Drainable Liquid Volume 3500 gal

Average Maximum Tank Temperature, past 6 months 68 F

Estimated Supernatant Volume 3500 gal

[ ] Cost/Benefit Analysis attached

Evaluation Performed by [illegible] Date 11/17/83 Checked by [illegible] Date 11/15/83

Disposition of Tank:

[X] Tank Interim Stabilized at 3500 gallons of drainable liquid

[ ] Tank not Interim Stabilized; stabilization activities resumed

Approved by: Manager, TF&EPC [illegible] Date 11/18/83

Manager, TFS&O [illegible] Date 11-22-83

Program Manager [illegible] Date 11-28-83

DISTRIBUTION: TF&EPC Tank File, Tank Farm Surveillance Analysis, Approval Signatures

INTERIM STABILIZATION EVALUATION - NON-JET PUMPED TANKS

(CONTINUATION PAGE)

Evaluation Calculations and Comments

TANK: 103-T

TOTAL WASTE VOLUME = (WASTE LEVEL (in)) x 2750 gal/in + 12,500 gal

WASTE LEVEL = 5.0"

TOTAL WASTE VOLUME = 5 in x 2750 gal/in + 12,500 gal = 26,250 gal ≈ 26,000 gal.

SUPERNATANT VOLUME: SUPERNATANT POOL IS ESTIMATED TO AVERAGE 2" DEPTH AND COVERS 80% of the TANK SURFACE FROM 4/2/81 photos.

SUPERNATANT VOLUME = 2 in x 2750 gal/in x .80² = 3520 gal ≈ 3500 gal.

SOLIDS VOLUME = TOTAL WASTE VOLUME − SUPERNATANT VOLUME

SOLIDS VOLUME = 26,000 gal − 3500 gal = 22,500 gal.

DRAINABLE INTERSTITIAL LIQUID = (SOLIDS VOLUME − CAPILLARY HEIGHT x 2750 gal/in) x POROSITY

CAPILLARY HEIGHT FOR SLUDGE = 24" SLUDGE POROSITY = 12.5%

DRAINABLE INTERSTITIAL LIQUID = (26,000 gal − 24 in x 2750 gal/in) x .125 = 0 by definition

ASSUMING the sludge has SALTCAKE CHARACTERISTICS:
CAPILLARY HEIGHT = 12" POROSITY = 45%

DRAINABLE INTERSTITIAL LIQUID = (26,000 gal − 12 in x 2750 gal/in) x .45 = 0

DRAINABLE LIQUID REMAINING = DRAINABLE INTERSTITIAL LIQUID + SUPERNATANT

DRAINABLE LIQUID REMAINING = 0 + 3500 gal = 3500 gal.

Calculations done by [signature]

Checked by Nancy G Bill

INTERIM STABILIZATION EVALUATION - NON-JET PUMPED TANKS

(CONTINUATION PAGE)

Evaluation Calculations and Comments

TANK: 103-T

Tank 103-T has had intrusions between 1978 and 1981. In the spring of 1981 an unusual occurrence report was written on the tank because it exceeded the liquid level increase criteria. In August 1981, the tank was interim isolated. Since then, the liquid level has fluctuated between 5.0" and 5.5". It is suspected that the fluctuation is due to instrument error.

The lack of recent photographs is not a problem as the liquid level at the time the photographs were taken (4/2/81) was 5.0". While the lowest liquid level (5.0") was used in estimating supernatant volume, the supernatant volume if the liquid level were 5.5" would be 4500 gallons which is still below the 5000 gallon criteria.

Evaluation done by Tim D. Kirkpatrick

Checked by Nancy J. Pilli

Single-Shell Tank Interim Stabilization Evaluation Form.

TANK: 241-T-104

(Jet Pumping only) Reason for stopping jet pumping:

[X] Meets 0.05 gpm criteria, Date of Shutdown 7/18/99

[ ] Major equipment failure, Date of Shutdown _____

Tank Waste Surface Level Condition and Comments: SURFACE IS CLEARLY SLUDGE TYPE WASTE WITH NO SALTCAKE PRESENT. NO VISIBLE WATER ON SURFACE. WASTE SURFACE APPEARS LEVEL ACROSS TANK WITH NUMEROUS CRACKS (~2 INCHES WIDE AND ~4 INCHES DEEP). THERE IS A MINIMAL (~2 FOOT DIAMETER) COLLAPSED AREA AROUND SALTWELL SCREEN, WITH NO VISIBLE BOTTOM.

Evaluation: (See continuation page for calculations and additional comments)

Photo/video review completed - Date of most recent photo/video 10/7/99

[X] Tank history, temperature profile and intrusion reviews completed and no anomalies identified

Starting Liquid Level 166.72 Method ENRAF Date 3/24/96
Final liquid level 107.184 Method NEUTRON PROBE Date 11/1/99
Total Net Pumped Volume 149.5 Kgal
Capillary Height Used in Calculation 24 IN.
Final Solids Volume 316.8 Kgal
Final Average Flow rate 0.035 gpm
Calculated Porosity 15% (HNF-2978)
Supernatant Volume Remaining 0 gal
Drainable Interstitial Liquid 31.2 Kgal
Drainable Liquid Remaining 31.2 Kgal
Pumpable Liquid Remaining 26.9 Kgal

[ ] Justification letter attached (Interim Stabilization Cognizant Engineer)

Disposition of Tank:

[X] Tank Interim Stabilized
[ ] Tank Not Interim Stabilized; Re-start Pumping

Evaluation prepared by SST Cognizant Engineer: KEVIN J. HULL Date 11/16/99

Evaluation checked by Process Engineer: Victor C Boyles Date 11/16/99

Interim Stabilization Cognizant Engineer: Stephen L. Swaney Date 11/16/99

APPROVED BY:

Manager, Interim Stabilization Engineering MWK M.R. KOCH Date 11/16/99

Manager, Process Engineering C. DeFigh-Price Date 11-16-99

Manager, SST Engineering R E Lawson Date 11/16/99

EVALUATION CALCULATIONS AND COMMENTS:

TANK: 241-T-104

- CAPILLARY HEIGHT = 24" (HNF-2978)

- FINAL SOLIDS VOLUME

  VOL = ((ENRAF LEVEL* - 12**) x 2750) + 12,500***

  * ASSUME UNIFORM LEVEL SURFACE ACROSS TANK
  ** DISH BOTTOM OF TANK
  *** VOLUME OF 12" DISH BOTTOM

  ENRAF LEVEL = 122.67 (10/5/99)

  VOL = ((122.67-12) x 2750) + 12500

  VOL = 316,843 gallons ⇒ 316.8 Kgal

- FINAL AVERAGE FLOW RATE

  DETERMINE RATE THROUGH LAST 48 HOURS OF CONTINUOUS OPERATION (7/13/99 @ 11:30 THROUGH 7/15/99 @ 11:30)

  TOTALIZER (7/15/99 @ 11:30) = 96826
  TOTALIZER (7/13/99 @ 11:30) = 96726
  Δ = 100 gal

  RATE = 100 gal/48 HR = 2.083 gal/HR ⇒ 0.035 gal/min

- POROSITY

  USE 15% POROSITY PER HNF-2978 FOR SLUDGE TANK

- SUPERNATE VOLUME = 0 gal PER VIDEO

Evaluation Prepared by KEVIN J. HULL K. J. Hull Date 11/10/99

Evaluation Checked by Victor C Boyles Date 11/16/99

EVALUATION CALCULATIONS AND COMMENTS:

TANK: 241-T-104

- DRAINABLE INTERSTITIAL LIQUID (DIL):

DIL = [(Saturated Sludge Vol − (Capillary HT × 2750 gal/in)] × SLUDGE POROSITY

= [(316,843 − ((122.67" − 107.184") × 2750 gal/in)) − (24" × 2750 gal/in)] × 0.15

DIL = 31,238 gallons ⟹ 31.2 Kgal

- DRAINABLE LIQUID REMAINING (DLR):

DLR = DIL + Supernatant Supernatant = Ø

DLR = 31,238 gallons ⟹ 31.2 Kgal

- PUMPABLE LIQUID REMAINING (PLR):

PLR = DLR − ((unpumpable Ht × 2750 gal/in) × SLUDGE POROSITY)

* UNPUMPABLE HEIGHT = 18 inches = 29,000 gallons (for T-FARM Tanks)
(* PER HNF-2978, REV. 1) (First 12 inches = 12,500 gallons for DISHED BOTTOM

PLR = 31,238 − (29,000) 0.15 = 26,888 gallons

PLR = 26,888 gallons ⟹ 26.9 Kgal

Evaluation Prepared by KEVIN J. HULL [signature] Date 11/16/99

Evaluation Checked by Victor C Boyles Date 11/16/99

INTERIM STABILIZATION EVALUATION
NON-JET PUMP TANKS

Tank: 105-T

Evaluation (see continuation page for calculations and additional comments):

- [x] Photograph review completed - Date of most recent photographs 5-12-87
- [x] Tank History review completed
- [x] Tank temperature profile review completed

Surface Description: DARK SLUDGE SURFACE WITH 10% OF SURFACE COVERED WITH 1" TO 2" SUPERNATANT POOLS. UNEVEN SURFACE. FIC IS CONTACTING SOLIDS Date 5/12/87

Solids Level 30.1" Date 5/28/87 Method CASS-FIC

Liquid Level 30.1" Date 5/28/87 Method FIC, PHOTO

Solids Volume 98,025 GALLONS

Estimated Drainable Liquid Volume 22,812 GALLONS

Average Maximum Tank Temperature, past 6 months 89°F

Estimated Supernatant Volume N/A GALLONS

- [ ] Cost/Benefit Analysis attached

Evaluation Performed by [illegible] Date 5/28/87 Checked by [illegible] Date 5/29/87

Disposition of Tank:

- [x] Tank Interim Stabilized at 22,812 gallons of drainable liquid
- [ ] Tank not Interim Stabilized; stabilization activities resumed

Approved by: Manager, TF&EPE [illegible] Date 5/29/87

Manager, TFS&O [illegible] Date 6-2-87

Program Manager [illegible] Date 5/29/87

DISTRIBUTION: TF&EPE Tank File, Tank Farm Surveillance Analysis, Approval Signatures

EVALUATION CALCULATIONS AND COMMENTS

Tank: 105-T

Page 2 of 3

VOLUME CALCULATIONS

SUPERNATANT VOLUME = (2750 GAL/IN)(1.5 IN)(10%)

= 413 GALLONS

SOLIDS VOLUME

SOLIDS LEVEL = 30.1"

DISH BOTTOM TANK

(30.1 INCHES)(2750 GAL/IN) + 12,500 GALLONS

= 95,275 GALLONS

ADD ANOTHER 2750 GALLONS FOR EXPOSED SOLIDS ABOVE FIC DUE TO UNEVEN SURFACE:

TOTAL SOLIDS VOL = 95,275 + 2750 = 98,025 GALLONS

Calculations made by: C.J. Jones 5-7/87

Checked by: [signature]

EVALUATION CALCULATIONS AND COMMENTS

Tank: 105-T

Page 3 of 3

DRAINABLE INTERSTITIAL LIQUID REMAINING:

CAPILLARY HEIGHT = 33,000 GALLONS

DIL = (SOLIDS LEVEL - CAPILLARY HEIGHT)(POROSITY)(VOL. CONV)
= (30.1" - 12")(0.45)(2750 GAL/IN)
= 22,399 GALLONS

TOTAL DRAINABLE = DIL + SUPERNATANT
= 22,399 + 413
= 22,812 GALLONS

Calculations made by: [signature] 5/09/87

Checked by: [signature]

INTERIM STABILIZATION EVALUATION

TANK NUMBER: 241-T-106 EFFECTIVE DATE: 8-10-81

LIQUID LEVEL & RISER NO. 3.2" R-1

SOLIDS LEVEL & RISER NO. # 3.2" R-1

EST. SUPERNATE LIQUID VOLUME Less than 1000 gallons

EST. DRAINABLE INTERSTITIAL LIQUID VOLUME 0

TEMPERATURE: 67 F

IS TANK HEAT LOAD A PROBLEM?

yes ____ no X unknown ____

IS THERE A POTENTIAL DOME LOAD PROBLEM? yes ____ no X

PHOTOGRAPH EVALUATION: Photo date - July 24,1980

The waste surface is composed of damp peripheral sludge sloping inward to an irregular center liquid. The diameter of the pool is estimated to be in the range of 22'± 3', and its shallowness is attested by islets and bands of exposed sludge. Both the manual and automatic(FIC) liquid level gauges are seen to be contacting solids.

COMMENTS:

Prepared By: [signature] 7-22-81

Reviewed By: V. Dennis Maupin

Attachment D

Single Shell Tank Interim Stabilization Evaluation Form

TANK: 241-T-107

Reason Jet Pumping Halted:

[X] Meets 0.05 gpm criteria, Date of Shutdown 4/14/96*
[ ] Major equipment failure, Date of Shutdown _____

Surface Condition & Comments: No supernatant visible on surface of waste. The surface has an irregular contour of mostly sludge, the elevation differences between high and low points appear to be about 4 inches.

Pumping was delayed from October to February due to addition of flammable gas monitor and jet pump failure/replacement.

Hot water flush to salt well screen performed on 3/7/96, inflow rates were again above criteria limit until criteria met on 3/18/96.

*An additional 711 gallons was pumped from T-107 after the inflow criteria was satisfied on 3/18/96.
**The tank reference level was adjusted 11.88 inches on 2/5/96 from the tank edge to the center bottom elevation. The pump platform sat on 7 inch blocks during the first pump run in September and October, the blocks were removed in January.

Evaluation: (See continuation page for calculations and additional comments)

Photograph review completed - Date of most recent photograph 5/9/96
Tank history review completed. [X]
Tank temperature profile reviews completed. [X]
(Jet) Starting Liquid Level 73.94 (**Corrected) Method Enraf Date 9/14/96 9.5 KH 5/22/96
Final liquid level 65.56 (**Corrected) Method dip tubes Date 4/3/96

(All exc. Aux) Total Net Pumped Volume 11002 gal
(Jet) Capillary Height Used in Calculation 24 in
Final Solids Volume 173 kgal
(Jet) Final Average Flowrate 0.043 gal/min
(Jet) Calculated Porosity 0.209
Supernatant none
(All exc. Aux) Drainable Interstitial Liquid 22.4 kgal
(All exc. Aux) Drainable Liquid Remaining 22.4 kgal
(All exc. Aux) Pumpable Liquid Remaining 12.1 kgal
(Jet & Aux) [ ] Justification letter attached

Disposition of Tank:

[X] Tank Interim Stabilized
[ ] Tank Not Interim Stabilized; Restart Pumping

Evaluation Performed by: KJ Hull [signature] Date 5/22/96

Checked by: MR Koch [signature] Date 5/22/96

APPROVED BY:

Team Lead, Stabilization Engineer [signature] Date 5/22/96

Manager, Interim Stabilization Engineering [signature] Date 5/22/96

Manager, West Tank Farm Transition Project [signature] Date 5.22.96

Distribution: TWRS Nuclear Safety, Surveillance Engineering, Systems Engineering, Single Shell Tank History File, TPA Integration Control, Approving Managers, Evaluation Performer, Team Lead, and Checker signatures.

Attachment D (cont.)

EVALUATION CALCULATIONS AND COMMENTS:

TANK: 241-T-107

STARTING LIQUID LEVEL

ENRAF - ~~21~~ 9/14/95 → 61.80

CORRECT LEVEL DUE TO REBASELINING OF WASTE ELEVATION FROM TANK WALL BOTTOM TO CENTER BOTTOM. 2/5/96 ADJUSTMENT:

ENRAF - AS FOUND 56.87

ENRAF - AS LEFT 69.01

CORRECTED STARTING LEVEL = 69.01 + (61.80 - 56.87)

= 73.94 INCHES

ENDING LIQUID LEVEL

USE DIP TUBE READING 4/3/96 WF-60 Sps 1.14

ASSUMING ENRAF AND DIP TUBE MEASUREMENT ON 2/7/96 WERE EQUIVALENT, OBTAIN CORRECTION OF DIP TUBE TO REFERENCE LEVEL.

ENRAF 2/7/96 - 69.07

DIP TUBE 2/7/96 - WF-64, Sps 1.14

CORRECTION = 69.07 - (64/1.14) = 12.93

ENDING LIQUID LEVEL = (60/1.14) + 12.93

= 65.56 INCHES

Evaluation Performed by [signature] Date 5/22/96

Checked by [signature] Date 5/22/96

Doc Number PM/S Number
1. Data Sheet Number 2W-95-00952/W WT-03670
Work Item Title 241-T: CHANGE ENRAF REF LEVELS

D/S Status OPEN

	7.3.8	AS-FOUND [RL] VALUE:	443.0
AC	7.3.9	AS-FOUND [RL] AND CORRECT [RL] VALUE MATCHES TO .10"? CRAFT INITIAL TS	YES ___ NO ✓
	7.3.12	(IF REQUIRED) PROGRAMMED [RL] VALUE:	474.88
	7.3.13	(IF REQUIRED) PROGRAMMED [RL] AND CORRECT [RL] EXACTLY MATCH?	
AC	7.3.14.4	(IF REQUIRED) AS-FOUND [RL] AND CORRECT [RL] VALUE MATCHES TO .10"? CRAFT INITIAL TS	YES ✓ NO ___
	7.3.17.1	AS-FOUND [TT]	487.43
	7.3.17.5	AS-LEFT [TT]	499.35

TANK LEVEL

7.1.1	AS-FOUND TANK LIQUID LEVEL:	56.87
.3.21	AS-LEFT TANK LIQUID LEVEL:	69.01

. Data Sheet Complete Signature T. Yeaman Date 2-5-96

. Res Code	Description	No.	Act Hrs
18	Instrument Technician	2	1

. Completed Satisfactory ✓

. Comments

107-T

Attachment D (cont.)

EVALUATION CALCULATIONS AND COMMENTS:

TANK: 241-T-107

SALTWELL INFLOW RATE
REF. TEMP ROUND SHEET 3-17-96/3-18-96

5:02 AM Spg - 1.1 WF - 14

6:00 AM Spg - 1.1 WF - 22

SALTWELL SCREEN - 10 INCH DIA.

INFLOW RATE = VOL/TIME

$$= \left[\frac{\pi (10)^2}{4}\left(\frac{22}{1.1} - \frac{14}{1.1}\right) IN^3 \ \frac{gal}{231\ IN^3}\right] \Big/ 58\ MIN$$

$$= 0.043\ gal/min$$

NOTE: INFLOW RATE HAD DROPPED TO 0.015 gal/min ON 3/4/96, HOT WATER FLUSH OF SALTWELL SCREEN ON 3/7/96 RAISED INFLOW RATE ABOVE 0.05 CRITERIA UNTIL SATISFIED ON 3/18/96.

PUMP WAS SHUTDOWN TO EVALUATE INFLOW

Evaluation Performed by [signature] Date 5/22/96

Checked by Michael R Kah Date 5/22/96

WORKING COPY

Printed on: Mar 13, 96 8:07 am

TANK FARM PLANT OPERATING PROCEDURE | WEST - ROUNDS

DATE: 3-17-96 / 3-18-96

241-T
TEMPORARY ROUND SHEET
T-107 SALTWELL SCREEN REFILL
TIME DATA COLLECTED

TANK NO. T-107	MAXIMUM	MINIMUM	21:00 20:59	23:00	01:00	03:00	01:00	05:00	06:00	0715	0810	0910	955	1110
READING FGM	15%	N/A	.4	.3	.2	.1	.1	.1	.1	.1	.2	.1	.4	.4
CAL GAS BOTTLE PRESSURE	N/A	100 PSIG	500	500	500	495	495	490	490	490	490	490	490	490
FGM SAMPLE FLOW	350 CCM	250 CCM	320	320	340	280	300	330	300	350	325	325	300	300
CORRECTED SPECIFIC GRAVITY	N/A	N/A	1.1	1.1	1.1	1.0	.367	1.1	1.1	1.1	1.1	1.1	1.1	1.1
WEIGHT FACTOR SALT	N/A	N/A	21	34	40	31	2	14	22	31	36	37	40	42

OPERATOR DAYS [signature] Signature

NIGHT OPERATOR Troy L Bacon Signature

SUPERVISOR DAYS [signature] Signature

NIGHT SUPERVISOR [signature] Signature

FREQUENCY DETERMINED BY THE SHIFT MANAGER: As time allows

TEMPORARY ROUND SHEET EFFECTIVE THROUGH 2400 ON 3-28-96

Temporary Rounds Sheet
Shift Manager Approval: [signature] Date: 3-13-96

Attachment D (cont.)

EVALUATION CALCULATIONS AND COMMENTS:

TANK: 241-T-107

TOTAL PUMPED

FQ-JP1 STARTING 9367.4 gal

FQ-JP1 ENDING 19900.5 gal
FQ-JP1 CORRECTED.* 20878.5 gal
FLUSH WATER 509 gal

TOTAL PUMPED = 20878.5 - 9367.4 - 509

= 11,002 gal

POROSITY

STARTING DIP TUBE LEVEL (2/7/96) WF-64 SPG 1.14

ENDING DIP TUBE LEVEL (4/3/96) WF-60 SPG 1.14

VOLUME PUMPED STARTING (2/7/96) 8389 gal

VOLUME PUMPED ENDING (3/15/96) 10816.6 gal

FLUSH WATER (2/7/96 - 3/15/96) 413 gal

* TOTALIZER FQ-JP1 WENT OFF LINE ON 2/26/96 ~22:00, IT CAME BACK ON LINE 2/27/96 ~06:00 BUT REGISTERED 978 GALLONS LESS. THE 978 GALLON CORRECTION KEEPS TOTALS REFERENCABLE BACK TO START OF PUMPING.

Evaluation Performed by [signature] Date 5/22/96

Checked by [signature] Date 5/22/96

TANK: 241-T-107

POROSITY (CONTINUED)

POROSITY = VOL PUMPED / VOL OF DIFFERENTIAL HEIGHT

VOLUME PUMPED = 10816.6 − 8389 − 413

= 2014.6 gal

DIFF. HEIGHT = (64/1.14) − (60/1.14)

= 3.51 in

POROSITY = 2014.6 gal / (3.51 in (2750 gal/in))

= 0.209

DRAINABLE INTERSTITIAL LIQUID

DIL = [SLUDGE VOL − (24 in CAP. HEIGHT * 2750)] * POROSITY

= [17300 − (24 * 2750)] * .209

= 22.4 Kgal

PUMPABLE LIQUID REMAINING

PLR = DIL − (18 in UNPUMPABLE HEIGHT * 2750 * POROSITY)

= 22.400 − (18 * 2750 * .209)

= 12.1 Kgal

Evaluation Performed by [signature] Date 5/22/96

Checked by [signature] Date 5/22/96

INTERIM STABILIZATION

TANK: 108-T EFFECTIVE DATE: 11-30-78

TEMPERATURE: 64°F

SAMPLE REQUIRED: YES ☐ NO ☒

PHOTO EVALUATION: YES ☒ NO ☐

COMMENTS: 108-T is changed from Inactive - Primary Stabilized TO Inactive - Interim Stabilized.

Temperature data and photo evaluation sheets are attached. The temperature did not exceed 65°F during any period covered. The photographs taken in October 1977 show a damp solids surface across 45% of the tank. There is a small liquid pool at the very center of the tank. This liquid pool contains approximately 100 gals of liquid.

There is less than two feet of solids in this tank. There is no requirement for a sample to interim stabilize this tank.

TANK : 108-T
DATE OF PHOTO = 10/26/77
PHOTO # : 7710966
LL : 12.25 "

SURFACE DESCRIPTION: 95% SOLID.

LOCATION OF SALT WELL IN PHOTOS : NONE

OTHER :

INTERPRETER: JBN

DATE = 1/16/78

Tank: 109-T

Evaluation (see continuation page for calculations and additional comments):

☒ Photograph review completed - Date of most recent photographs* 7/23/84

☒ Tank History review completed

☒ Tank temperature profile review completed prior to 11/13/82.

Surface Description: The surface appears to be a dry sludge with No supernate presents

Date 12/13/84

Solids Level 16.7 inches Date 12/7/84 Method Manual Tape

Liquid Level 16.7 inches Date 12/7/84 Method Manual Tape

Solids Volume 58,400

Estimated Drainable Liquid Volume 0

Average Maximum Tank Temperature, past 6 months Not Available

Estimated Supernatant Volume 0

☐ Cost/Benefit Analysis attached

Evaluation Performed by _____ Date _____ Checked by _____ Date _____

Disposition of Tank:

☒ Tank Interim Stabilized at 0 gallons of drainable liquid

☐ Tank not Interim Stabilized; stabilization activities resumed

Approved by: Manager, TF&EPE [signature] Date 12/17/84

Manager, TFS&O [signature] Date 12/19/84

Program Manager [signature] Date 12-20-84

DISTRIBUTION: TF&EPE Tank File, Tank Farm Surveillance Analysis, Approval Signatures

* TANK LEVEL HAS REMAINED CONSTANT SINCE PHOTOGRAPHS WERE LAST TAKEN

EVALUATION CALCULATIONS AND COMMENTS

Tank: 109-T

Page 2 of 2

Solids Level: 16.7 inches (Sludge)

Solids Volume: (16.7 inches)(2750) + 12500 = 58425 gallons

Supernate Volume: 0 gallons

Drainable Interstitial Liquid = Drainable Liquid = (58425 - 66000)(.125) = -947 gal ⟹ 0 gallons

Calculations made by: J. Stan Hill

Checked by: Ra Van Meter

Single-Shell Tank Interim Stabilization Evaluation Form

TANK: **241-T-110**

(Jet Pumping only) Reason for stopping jet pumping:

[ ] Meets 0.05 gpm criteria, Date of Shutdown _____

[x] Major equipment failure, Date of Shutdown _____8/12/99_____

Tank Waste Surface Level Condition and Comments: _____ SEE DESCRIPTION PAGE 2 _____

Evaluation: (See continuation page for calculations and additional comments)

Photo/video review completed - Date of most recent photo/video _____10/07/99_____

[x] Tank history, temperature profile and intrusion reviews completed and no anomalies identified

Starting Liquid Level ___161.12"_____ Method ____ENRAF_____ Date ___05/12/97_____
Final liquid level _____ 146.7"_____ Method _____LOW_____ Date ___01/03/00_____
Total Net Pumped Volume ____50.3 Kgal_____
Capillary Height Used in Calculation ___24"____
Final Solids Volume _____369.1 Kgal_____
Final Average Flow rate _____0.14 gpm_____
Calculated Porosity _____N/A_____
Supernatant Volume Remaining ____700 gal___
Drainable Interstitial Liquid _____47.5 Kgal____
Drainable Liquid Remaining _____48.2 Kgal____
Pumpable Liquid Remaining ____43.2 Kgal_____

[x] Justification letter attached (Interim Stabilization Cognizant Engineer)

Disposition of Tank:

[x] Tank Interim Stabilized
[ ] Tank Not Interim Stabilized; Re-start Pumping

Evaluation prepared by SST Cognizant Engineer: _____ Date 1/4/00

Evaluation checked by Process Engineer: VC Boyles Date 1/4/2000

Interim Stabilization Cognizant Engineer: _____ Date 1/4/2000

APPROVED BY:

Manager, Interim Stabilization Engineering _____ Date 1/5/2000

Manager, Process Engineering VCB _____ Date 1-5-2000

Manager, SST Engineering _____ Date 1/5/00

EVALUATION CALCULATIONS AND COMMENTS:

TANK: **241-T-110**

The surface of 241-T-110 is a smooth, brown tinted sludge with visible cracks. The waste surface appears to be saturated, but shows no standing water except for a shallow pool of supernatant liquid located around the saltwell screen at the center of the tank. The pool is estimated to be 15 feet in diameter and approximately 6 inches deep. The waste surface slopes from the tank sidewall to the supernatant pool. ENRAF readings based 51 inches from the tank sidewall and show a waste surface level of 147.6 inches. Liquid observation well (LOW) readings are also based at 51 inches from the tank sidewall and indicate an interstitial liquid level (ILL) of 146.7 inches. This is approximately 1 inch below the waste surface level. The LOW is located on the opposite side of tank 241-T-110 from the ENRAF device. Dip tube readings are located at the tank center and report an adjusted liquid surface level of 130.0 inches. All levels are based off the centerline of the tank's dished bottom. The ILL slopes down from the tank sidewall to the supernatant pool due to the capillary action of the waste.

The actual quantity of drainable interstitial liquid cannot be determined due to the unknown profile of the ILL slope within the surrounding waste. LOW readings will be used for reporting the final liquid waste quantities since these values conservatively provide a maximum value for the remaining liquid quantity.

DATA

LOW Reading (01/03/00) = 146.652 inches ~ 146.7 inches

ENRAF Reading (01/03/00) = 146.57 inches ~ 147.6 inches

Dip Tube Reading (12/15/99) = 125.94 inches + 4 inches (distance off tank bottom)
= 129.94 inches ~ 130.0 inches

Tank Waste Porosity = 15% **

Tank Dished Bottom Volume (Lower 12" Height) = 12,500 gallons **

Supernatant Volume (10/7/99 In-Tank Video Estimate) = 700 gallons

D.I.L. = Drainable Interstitial Liquid **
= [(Saturated Sludge Ht. – 12") + 12,500 gal – (24" Capillary Ht.)]* 2750 gal/in * porosity

D.L.R. = Drainable Liquid Remaining **
= D.I.L. + supernatant liquid

P.L.R. = Pumpable Liquid Remaining **
= D.I.L. – (18" Unpumpable Ht.)* 2750 gal/in * porosity

**Reference HNF-2978, Rev. 1

Evaluation Prepared by [signature] Date 1/4/00

Evaluation Checked by VC Boyles Date 1/4/2000

EVALUATION CALCULATIONS AND COMMENTS:

TANK: **241-T-110**

LOW BASIS:

DIL = [(146.7" – 12") * 2750 gal/in + 12,500 gallons – (24") * 2750 gal/in] * 0.15

= [370,425 + 12,500 - 66,000] * 0.15 = 47,540 gallons (47.5 Kgal)

DLR = DIL + Supernatant = 47,540 gallons + 700 gallons = 48,240 gallons (48.2 Kgal)

PLR = DIL – [(18") * 2750 gal/in * 0.15]

= 47,540 – 4350 = 43,190 gallons (43.2 Kgal)

NOTE:

The final waste volumes for drainable interstitial liquid, drainable liquid remaining and pumpable liquid remaining are subject to change as the tank settles. The LOW basis of evaluation is conservative and allows the tank to be declared interim stabilized. Updates to the Waste Tank Summary Report (HNF-EP-0182) will be made as required as LOW readings drop in level and the tank achieves final equilibrium.

SOLIDS VOLUME:

The slope of the waste surface of 241-T-110 can be determined using ENRAF and Dip Tube readings. Assuming a continuous slope from the edge of the supernatant pool to the tank sidewall, a slope of 4 degrees is determined. The total solids volume of the tank is therefore found by the following equation:

Volume (Tot) = Volume (sloped surface) + Volume (below slope) + Volume (dished bottom)

Volume (Tot) = 53,328 gallons + 303,270 gallons + 12,500 gallons = 369,098 gallons (369.1 Kgal)

Evaluation Prepared by [signature] SKS Date 1/4/00

Evaluation Checked by UC Boyles Date 1/4/2000

CH2MHILL
Hanford Group, Inc.

From: Interim Stabilization Engineering 74D00-00-mrk.002
Phone: 373-2699 S7-20
Date: January 4, 2000
Subject: JUSTIFICATION FOR DECLARING 241-T-110 INTERIM STABILIZED, DUE TO MAJOR EQUIPMENT FAILURE

To:	T. L. Hissong	S7-20	CHG Correspondence Control	H6-08
cc:	V. C. Boyles	R2-11	P. F. Kison	T4-07
	C. DeFigh-Price	R2-12	R. L. Larson	T4-07
	J. C. Field	R2-11	R. S. Popielarczyk	R2-58
	H. R. Hopkins	R2-58	S. L. Swaney	S7-24
	K. J. Hull	T4-07	D. T. Vladimiroff, FDNW	S7-20
	N. W. Kirch	R2-11	MRK LB	

Saltwell pumping of Tank 241-T-110 began on May 12, 1997, and continued until August 12, 1999, when a major equipment failure halted pumping. A total of 50,273 gallons of liquid waste was transferred to 244-TX DCRT before the failure occurred. Waste volume calculations show 47,600 gallons of drainable interstitial liquid remaining in the tank, of which 43,190 gallons is estimated to be pumpable. There is approximately 700 gallons of supernatant liquid remaining. *Tank Farm Facility Interim Stabilization Evaluation*, HNF-IP-0842, Volume IV, Section 4.1, requires a jet pumped waste tank contain less than 50,000 gallons of drainable interstitial liquid, less than 5000 gallons of supernatant liquid, and achieve a maximum pump out or in-flow rate of 0.05 gpm for interim stabilization. A single-shell waste tank can be declared interim stabilized by major equipment failure by meeting the drainable interstitial liquid and supernatant quantities, but without meeting the 0.05 gpm criteria. Tank 241-T-110 meets the criteria for Interim Stabilization due to major equipment failure.

Historical data from recently stabilized single-shell tanks in T-farm (241-T-104, 241-T-107, and 241-T-111) show an average of 21,300 gallons of pumpable liquid will remain in the tank once the 0.05 gpm flow rate criteria is achieved. The hydraulic properties of sludge tanks in T-farm are similar and indicate that achieving zero pumpable liquid in 241-T-110 is not likely. Therefore, a remaining pumpable volume of 21,300 gallons will be assumed for the following calculations in this evaluation.

If repairs at 241-T-110 were completed, the time to pump the remaining liquid from the tank is dependent upon the flow rates of the liquid wastes into the saltwell screen. The current flow rate of liquid into the saltwell screen at 241-T-110 is observed at 0.14 gpm, or 202 gpd. At 100% pumping efficiency, a constant flow rate of 0.14 gpm, and no further equipment failures, it would take over 15 weeks of pumping to reach an average of 21,300 gallons.

Previous saltwell campaigns have shown the flow rate of liquid into the saltwell screen will decrease as the interstitial liquid level drops. Therefore, to determine the estimated time to pump 241-T-110, an average rate of 0.09 gpm (130 gpd) at 45% operating efficiency is assumed. Using this rate and efficiency, the time to remove the pumpable liquid to 21,300 gallons in tank 241-T-110 is over 53 weeks. Over this period, numerous system and transfer line flushes would be required to prevent the typical plugging seen with T-farm sludge tank systems. The transfer line hold up volume of 1600 gallons necessitates large flushes. For example, from July 29, 1999,

to August 12, 1999, a total of 1750 gallons of flush water was required to maintain the transfer system operable. During this time a total of 267 gallons of waste was pumped. If pumping were restarted, this would result in an addition of 93,550 gallons to the waste stream to remove the estimated remaining pumpable liquid (21,890 gallons) of 241-T-110. The volume of liquid to be pumped over the projected amount of time does not warrant generation of waste in the form of flush waters.

To facilitate the replacement of failed equipment, the pump pit cover plate at 241-T-110 would have to be removed and workers would be required to work over the open pit. A similar repair to the Diaphragm Operated Value installed in the 241-T-110 pump pit was performed on October 14, 1998. During this work the pump assembly measured 10 mrem/hr at 1 inch resulting in a dose of 85 mrem to workers. However, the proposed repair work at 241-T-110 is more extensive in nature and will consequently require more time to complete and will increase the dose exposure to workers. This is not compliant to ALARA principles.

Repairs required to resume pumping at 241-T-110 would include replacement of the JR-1 process control valve and inspection of pressure switch PS-2. Costs for repair and continued operation of 241-T-110 are based on Single-Shell Tank Interim Stabilization, Revision 3, Working Schedule. It is estimated that it would cost $77,000 to replace the equipment and meet waste disposal costs at 241-T-110. If repairs were made and pumping was restarted, the project expenses to calibrate and maintain the current equipment at 241-T-110 and 244-TX DCRT, for the projected 53 week pumping schedule, is estimated to cost $596,250. Additionally, since 241-T-110 is the last tank to be stabilized in T-complex, separate personnel would be required to staff T-farm due to its remote location with respect to other saltwell operations. The cost for 24-hour shift personnel for equipment operation is estimated at $609,500. Total project cost to restart and complete pumping of 241-T-110 is $1,205,750.

Based upon the remaining amount of pumpable liquid, ALARA principles, and cost concerns, it is recommended that tank 241-T-110 be declared interim stabilized on the basis of major equipment failure as defined by *Tank Farm Facility Interim Stabilization Evaluation* procedure, HNF-IP-0842, Volume IV, Section 4.1.

If you have any questions, please call me on 373-2699, or Steve L. Swaney on 373-3472.

Michael R Koch

Michael R. Koch, Manager
Interim Stabilization Engineering

SLS/lsc

CONCURRENCE

SL HR Hopkins Date 01/06/00
H. R. Hopkins, Manager, Plant Engineering

VCB C. DeFigh-Price Date 1/05/00
C. DeFigh-Price, Manager, Process Engineering

Figure 2. Interim Stabilization Evaluation for Jet-Pumped Tanks
(Sheet 1 of 2)

TANK: 241-T-111

Page 1 of 3

Reason Jet Pumping Halted:

I. [X] Meets 0.05 gpm criteria, Date of Shutdown 2/8/95
II. [ ] Major equipment failure, Date of Shutdown _____

Surface Condition & Comments:
Surface is a smooth, brown tinted sludge with visible cracks. The sludge slopes from the tank sidewall to the middle of the tank where the slope increases downward to the saltwell screen. The F.I.C. is contacting a solid surface approximately 2" into the waste surface. A small pool of 60 gallons is visible around the central saltwell screen.

Evaluation: (See continuation page for calculations and additional comments)

Photograph review completed - Date of most recent photograph 2/13/95
Tank history review completed. [X]
Tank temperature profile reviews completed. [X] ~64°F (2/22/95)
Starting liquid level 169.9" Method Dip Tubes Date 5/15/94
Final liquid level (after equilibration) 146.0" Method Dip Tubes Date 2/21/95

Total Net Jet Pump Production 9600 gal
Capillary Height Used in Calculation: 24"

Final Average Flowrate 0.04 gpm
Calculated Porosity 10.5 %
Supernatant 60.0 gal
Drainable Interstitial Liquid 34.2 kgal
Drainable Liquid Remaining 34.3 kgal
Pumpable Liquid Remaining 29.1 kgal

Disposition of Tank:

[X] Tank Interim Stabilized
[ ] Tank not Interim Stabilized; Jet Pumping Restarted

Evaluation Performed by: SL Swan Date 2/22/95
Checked by: VC Boyles Date 2/22/95

APPROVED BY:

Team Lead, Stabilization Engineering VC Boyles Date 2/22/95
Manager, Tank Stabilization & Engineering Support [signature] Date 2/22/95
Manager, SST Stabilization Program [signature] Date 2/22/95
Manager, Tank Farm Operations [signature] Date 2/22/95
Add'l Sig. for Reason # II: Manager, TWRS Plant _____ Date _____

Distribution: Nuclear Facility Safety, Shift/Surveillance Engineering, Systems Engineering, Single-Shell Tank History File, TPA Integration Control, Approving Managers, Evaluation Performer, and Checker signatures.

Figure 2. Interim Stabilization Evaluation for Jet-Pumped Tanks
(Sheet 2 of 2)

Page 2 of 3.

EVALUATION CALCULATIONS AND COMMENTS:

TANK: 241-T-111

Tank 241-T-111 was pumped 9 times during January 1995 with 1149 net gallons pumped. The pumping times varied from a few hours to several days, but were all stopped due to low flow into the saltwell screen. After pumping stopped, it took an average of 24 hours for the saltwell screen to refill with interstitial liquid. To calculate flowrate, the actual hours pumped plus 216 hours to refill (9 campaigns times 24 hours) will be used. A total of 446 (216 + 230) hours was required to pump 1149 gallons for an average flow rate of 0.04 gallons per minute. This flowrate holds true for February 1995 where 376 net gallons were pumped over 152 hours or 0.04 gpm. Also of interest was the monitoring of the saltwell screen refill rate. The refill rate, based on dip tube information, was shown to average less than 0.02 gpm.

A total of 9600 net gallons of waste was pumped from T-111. This was figured on a 13,400 gallon increase in 244-TX DCRT level minus flush water usage of 3800 gallons. Based on pumping data, 3000 of the 9600 net gallons was supernatant liquid.

Evaluation Performed by: SL Sm[illegible] Date 2/22/95

Checked by: VC Boyles Date 2/22/95

Figure 2. Interim Stabilization Evaluation for Jet-Pumped Tanks
(Sheet 2 of 2)

Page 3 of 3

EVALUATION CALCULATIONS AND COMMENTS:

TANK: 241-T-111

DATA: Starting Liquid Level (Dip Tubes): Wft= 174", SpG= 1.020, L.L.= 169.9"
Ending Liquid Level (Dip Tubes): Wft= 150", SpG= 1.027, L.L.= 146.0"
Interstitial Liquid Level (I.L.L.) = Ending Liquid Level = 146.0"

NOTE: Liquid Level readings will be zeroed at the F.I.C. elevation of tank sidewall (-12") minus the height of dip tubes above the tank bottom (+4") or a net difference of (-8") for all calculations except porosity.

Net Pumped = Gross Pumped - flushes/primes = 13,400 - 3800 = 9600 gals.
Supernatant Volume = 3000 gallons (from pumping data).

$$\text{Calculate Porosity} = \frac{[(\text{net pumped volume}) - (\text{supernatant volume})] * 100}{[(\text{starting L.L.})-(\text{supernatant}/2750)-(\text{ending L.L.})]*2750}$$

$$= \frac{[9600 \text{ gallons} - 3000 \text{ gallons}]*100}{[169.9 - (3000/2750) - 146]*2750} = \frac{660,000}{62,725} = 10.5\%$$

ASSUMPTIONS: The waste above the final Interstitial Liquid Level is considered unpumpable.

Total Waste below I.L.L. = (146" - 8")*2750 + 12,500 gal (dished bottom)
= 392,000 gallons or 392.0 kgal.

Drainable Interstitial Liquid (D.I.L.) = (Total Waste below I.L.L. - capillary height) * porosity.

(where capillary height for sludge tank is 24" * 2750 = 65,000 gallons.)

= (392,000 - 66,000) * .105
= 34,230 gallons or 34.2 kgal.

Drainable Liquid Remaining (D.L.R.) = D.I.L. + supernatant remaining
= 34,230 + 60 gallons
= 34,290 gallons or 34.3 kgal.

Pumpable Liquid Remaining (P.L.R.) = D.L.R. - (unpumpable height) * porosity

(where unpumpable height for sludge tank is 18" * 2750 = 49,500 gallons.)

= 34,290 - (49,500) * .105
= 29,092 gallons or 29.1 kgal.

Evaluation Performed by: SL Swan Date 2/22/95

Checked by: VC Boyles Date 2/22/95

INTERIM STABILIZATION EVALUATION

TANK NUMBER: 241-T-202 EFFECTIVE DATE: 8-10-81

LIQUID LEVEL & RISER NO. 109.0" R-4

SOLIDS LEVEL & RISER NO. 109.0"

EST. SUPERNATE LIQUID VOLUME Less than 500 gallons

EST. DRAINABLE INTERSTITIAL LIQUID VOLUME 2000 gallons

TEMPERATURE: 70 F

IS TANK HEAT LOAD A PROBLEM?

yes ____ no X unknown ____

IS THERE A POTENTIAL DOME LOAD PROBLEM? yes ____ no X

PHOTOGRAPH EVALUATION: Photo date - January 30,1981

With the exception of a small pool of clear liquid at the salt well screen, the photographs show the waste surface to consist of fissured solids. The pool is approximately 4 feet in diameter and its bottom is visible to within 10 inches of the well casing. The volume of surface liquid is therefor estimated to be less than 500 gallons. The gauge plummet is contacting the sludge surface.

COMMENTS:

Prepared By: [signature] 7-22-81

Reviewed By: H. Dennis Mayer

STABILIZATION EVALUATION

Page 1 of 2

TANK: 241-T-203

EVALUATION (see continuation page for calculations and additional comments):

[✓] Photograph review completed - Date of most recent photographs: 8/3/89

[✓] Tank history review completed SEE TANK HISTORY FILE.

[✓] Tank temperature profile review completed 1/1/89 HIGH 66°F; AVE 64°F

Surface Condition & Comments: PHOTOS FROM 8/3/89 SHOW A DEEPLY CREVASSED SLUDGE SURFACE GENTLY SLOPING TO THE SALT WELL SCREEN WHERE A LIQUID POOL, APPROXIMATELY 6 FEET IN DIAMETER, IS LOCATED. THE VOLUME OF THE STANDING POOL IS ESTIMATED TO BE LESS THAN 200 GALLONS. THE LIQUID POOL IS ESTIMATED TO BE LESS THAN 6 INCHES DEEP WITHIN ONE FOOT OF THE SALT WELL SCREEN.

Solids Level 181.5 INCHES Date 4/2/91 Method MANUAL TAPE

Liquid Level 181.5 INCHES Date 4/2/91 Method MANUAL TAPE

Solids Volume 35,000 GALLONS

Estimated Drainable Insterstitial Liquid Remaining Volume 14,900 GALLONS (DIL)

Estimated Supernatant Volume Remaining < 200 GALLONS

Tank was pumped with a ~~submersible~~ P-10 pump ✓ Yes ___ No; if yes, 16,700 gallons pumped.

RECORD # 2774
APRIL 1978

[ ] Cost/Benefit Analysis attached

DISPOSITION OF TANK:

[✓] Tank Interim Stabilized at <200 gallons of supernatant and 14,900 gallons of drainable interstitial liquid

[ ] Tank not Interim Stabilized; continue stabilization activities

Evaluation Performed by D.D. Wiggins Date ~~6/25/91~~ DDW 6/27/91 Checked by K.A. White Date ~~6/25/91~~ KAW 6/27/91

APPROVED BY:

Manager, Stabilization Engineering VC Boyles Date 6/27/91

Manager, Single Shell Tanks R.E. Raymond Date 7-5-91

Manager, Tank Farms Facility Operations [illegible] Date 7/9/91

DISTRIBUTION: Tank Farm Surveillance Analysis, SE Tank History File, Nuclear Facility Safety, TPA Integration Control, Managers Approval, Evaluation Performer, and Checker signatures

STABILIZATION EVALUATION
CONTINUATION SHEET

Page 2 of 2

EVALUATION CALCULATIONS AND COMMENTS:

TANK: 241-T-203

1- COMMENTS:

* DECLARED INTERIM STABILIZED IN APRIL, 1981, INTERIM ISOLATED, AUGUST 1981. THIS PAPERWORK IS A RESUBMITTAL BECAUSE THE ORIGINAL INTERIM STABILIZATION EVALUATION IS MISSING.
* SINGLE-SHELL DISH-BOTTOM TANK: 55,000 GALLON CAPACITY, 200 SERIES.
* USE MOST CONSERVATIVE ESTIMATE. 45% POROSITY TO CALCULATE DIL AND 12.5% POROSITY TO DETERMINE PLR.

2- TOTAL WASTE VOLUME: (INCHES - DISH HEIGHT) X VOL/IN + DISH VOLUME

$= (181.5\ IN - 6\ IN) \times (196\ \frac{GALLONS}{IN}) + 590\ GALLONS$

$= 35{,}000$ GALLONS

3- DRAINABLE INTERSTITIAL LIQUID (DIL): (TOTAL WASTE - 12 IN CAPILLARY VOL) x 45 POROSITY

$DIL = [35{,}000 - (12\ IN \times 196\ \frac{GALLONS}{IN})]\ 0.45$ POROSITY

$DIL = 14{,}700$ GALLONS

4- SUPERNATANT VOLUME: TO ACCOUNT FOR AREA AROUND SALT-WELL, CALCULATE A 6 FT DIAMETER POOL USE 10 INCHES DEEP.

$= \frac{\pi (6FT)^2}{4} (10\ IN\ \frac{1FT}{12\ IN} \times 7.4805\ \frac{GALLONS}{FT^3}) = 176$ GALLONS (use 200 gallons)

5- DRAINABLE LIQUID REMAINING (DLR): DIL + SUPERNATANT

$DLR = 14{,}700 + 200$ GALLONS $= 14{,}900$ GALLONS

6- PUMPABLE LIQUID REMAINING (PLR): DLR - 18 INCH @ 12.5% POROSITY

$= [14{,}900 - [(18\ INCHES \times 196\ \frac{GALLONS}{IN}) \times 0.125]] = 14{,}500$ GALLONS

Calculations made by Dirk D. Wiggins Date 6/27/91

Checked by Katie White Date 6/27/91

INTERIM STABILIZATION EVALUATION

TANK NUMBER: 241-T-204 EFFECTIVE DATE: _____

LIQUID LEVEL & RISER NO. 197.0" R-4

SOLIDS LEVEL & RISER NO. 197.0"

EST. SUPERNATE LIQUID VOLUME Less than 500 gallons

EST. DRAINABLE INTERSTITIAL LIQUID VOLUME 4000 gallons

TEMPERATURE: 75 F

IS TANK HEAT LOAD A PROBLEM?

yes ____ no X unknown

IS THERE A POTENTIAL DOME LOAD PROBLEM? yes ____ no X

PHOTOGRAPH EVALUATION: Photo date - March 17,1981

Greater than 90 percent of the waste surface appears to be composed of wet sludge. Drainage of this material as a result of P-10 salt well pumping is evidenced by its radially cracked appearance. The liquid pool, located at the salt well casing, is approximately 4 feet in diameter.

COMMENTS:

Prepared By: Clement M. Walker 7-22-81

Reviewed By: V. Dennis Maupin

INTERIM STABILIZATION EVALUATION - NON-JET PUMPED TANKS

Tank: 101-TX

Evaluation (see Continuation Page for calculations and additional comments):

[X] Photograph review completed - Date of most recent photographs 1/31/84

[X] Tank history review completed

[X] Tank temperature profile review completed

Surface Description: Tank surface is covered by a shallow liquid pool approximately 1.5" deep and 60' in diameter. The FIC is resting on a mound of solids. Date 1/31/84

Solids Level 37.5" Date 1/31/84 Method photo

Liquid Level 39.0" Date 2/2/84 Method FIC

Solids Volume 84,100 gallons

Estimated Drainable Liquid Volume 4900 gallons

Average Maximum Tank Temperature, past 6 months 128 F 8/15/82 most recent data

Estimated Supernatant Volume 2640 gallons

[ ] Cost/Benefit Analysis attached

Evaluation Performed by [illegible] Date 2/2/84 Checked by N F Bell Date 2/2/84

Disposition of Tank:

[X] Tank Interim Stabilized at 4900 gallons of drainable liquid

[ ] Tank not Interim Stabilized; stabilization activities resumed

Approved by: Manager, TF&EPC [illegible] Date 2/3/84

Manager, TFS&O [illegible] Date 2-3-84

Program Manager [illegible] Date 2-3-84

DISTRIBUTION: TF&EPC Tank File, Tank Farm Surveillance Analysis, Approval Signatures

INTERIM STABILIZATION EVALUATION - NON-JET PUMPED TANKS

(CONTINUATION PAGE)

Evaluation Calculations and Comments

TANK: 101-TX

TOTAL WASTE VOLUME = (WASTE LEVEL (IN) − 12 IN) × 2750 gal/in + 12,500 gal
WASTE LEVEL = 39.0"
TOTAL WASTE VOLUME = (39 − 12) in × 2750 gal/in + 12,500 gal = 86,750 gal
SUPERNATANT VOLUME: POOL DIAMETER ESTIMATED 60 ft DEPTH ESTIMATED 1.5"
SUPERNATANT VOLUME = $60^2 ft^2 \times \pi \times \frac{1}{4} \times 15 in \times \frac{ft}{12 in} \times \frac{7.48 gal}{ft^3}$ = 2640 gallons

SLUDGE VOLUME = TOTAL WASTE VOLUME − SUPERNATANT VOLUME
SLUDGE VOLUME = 86,750 gal − 2640 gal = 84,110 gallons

DRAINABLE INTERSTITIAL LIQUID (DIL) = (SLUDGE VOLUME − Capillary HEIGHT × 2250 gal/in) × porosity
SLUDGE Capillary HEIGHT = 24 in SLUDGE POROSITY = 12.5%
DIL = (84,110 − 24 × 2750) × .125 = 2,260 gallons
DRAINABLE LIQUID REMAINING (DLR) = DIL + SUPERNATANT
DLR = 2,260 + 2640 = 4900 gallons

ASSUMING SLUDGE TO HAVE SALT CAKE Properties:
CAPILLARY HEIGHT = 12 in. Porosity = 45%
DIL = (84,110 − 12 × 2750) × .45 = 23,000 gallons
DLR = 23,000 + 2640 = 25,640 gallons.

CALCULATIONS DONE BY [signature]
CHECKED BY Nancy E Bell

Stabilization Evaluation

Tank: 102-TX

Reason Jet Pumping Halted:

[ ] Management Decision, Date of Shutdown _____

[X] Major Failure of Jet Pump, Date of Shutdown 11-14-82

Additional Comment: Shutdown of 102-TX was due to a failed flowmeter.

Evaluation: (See Sheet 2 for calculations and additional comment)

Starting Liquid Level 129" Date 12-4-81

Supernatant Volume 0 Date 12-4-81

Final Liquid Level Measured After Equilibration of Interstitial Liquid:

Dip Tubes 34.5" Date 3-24-83 -

LOW - Date _____

Manual - Date _____

Total Net Jet Pump Production 94439

Calculated Solid Characteristics:

Porosity 0.363

Permeability/ Viscosity ($^{K}/_{\mu}$) -

Capillary Height 12" (assumed)

Estimated Drainable Liquid Remaining 22 K gal

Final Average Flowrate 0.232 Date November, 1982

Evaluation Performed by S. J. Joncus Date 3-24-83

Disposition of Tank:

[X] Tank Interim Stabilized at 22 thousand gallons of Drainable Liquid,
4 thousand gallons of Pumpable Liquid.

[ ] Tank Not Interim Stabilized; Jet Pumping Restarted

Approval By: Manager, TF&EPC [signature] Date 4/1/83

Manager, TFS&O [signature] Date 4/4/83

Program Manager [signature] for RAZ Date 4/5/83

Distribution: TF&EPC Tank File, HS&E Surveillance Analysis, Approval Signatures.

Evaluation Calculations and Comment

TANK: 102 TX

Weight Factor 39.7
Specific Gravity 1.3

Current IL level = $\frac{39.7}{1.3} + 4 = 34.5$

Starting LL = 129"
Starting Supernatant = 0
Current Production = 94439 gallons

$$\text{Porosity} = \frac{\text{Jet Pump Production}}{[\text{Starting LL} - \text{Current LL}]\,2750}$$

$$= \frac{94439}{[129 - 34.5]\ 2750} = 0.363$$

Drainable IL Remaining = [Current LL - Capillary Height] [2750 gal/in] [porosity]
= [34.5 - 12] [2750] (0.363]
= 22.5 kgal

Pumpable IL Remaining = Drain IL Remaining - Non Pumpable Drainable Heel
= [34.5-12] [2750] [0.363] - 18 [2750] [0.363] = 4.5 kgal

$$\text{Final Average Flowrate} = \frac{\text{Gallons Pumped}}{\text{Minutes Operated}}$$

$$= \frac{3956}{[277]\ 60} = 0.232 \text{ gpm}$$

Stabilization Evaluation

Tank: 103-TX

Reason Jet Pumping Halted:

☐ Management Decision, Date of Shutdown _____

☒ Major Failure of Jet Pump, Date of Shutdown 6-1-83

Additional Comment:
Shutdown of 103-TX was due to a pump leak.

Evaluation: (See Sheet 2 for calculations and additional comment)

Starting Liquid Level 82" Date 12-2-81

Supernatant Volume 47 K gal Date 12-2-81

Final Liquid Level Measured After Equilibration of Interstitial Liquid:

Dip Tubes 34.00" Date 7-19-83

LOW - Date -

Manual - Date -

Total Net Jet Pump Production 68,302

Calculated Solid Characteristics:

Porosity 0.25

Permeability/ Viscosity (K/μ) -

Capillary Height 12" (assumed)

Estimated Drainable Liquid Remaining 15.1 K gal

Final Average Flowrate .046 gal/min Date May, 1983

Evaluation Performed by J. G. Riddelle Date 7-19-83

Disposition of Tank:

☒ Tank Interim Stabilized at 15.1 thousand gallons of Drainable Liquid
0 thousand gallons of Pumpable Liquid.

☐ Tank Not Interim Stabilized; Jet Pumping Restarted

Approval By: Manager, TF&EPC [signature] Date 7/22/83

Manager, TFS&O [signature] Date 7/28/83

Program Manager [signature] Date 8-12-83

Distribution: TF&EPC Tank File, HS&E Surveillance Analysis, Approval Signatures

Evaluation Calculations and Comment

TANK: 103-TX

7/19/83 WEIGHT FACTOR 36.71
SPECIFIC GRAVITY 1.2236

CURRENT IL LEVEL = $\frac{36.71}{1.2236}$ + 4.0 = 34.0"

STARTING LIQUID LEVEL = 82"

STARTING SUPERNATANT VOLUME = 47,000 gal

CURRENT PRODUCTION = 68,302 gal

CALCULATION OF CURRENT INTERSTITIAL LIQUID VOLUME

$$\text{POROSITY} = \frac{\text{JET PUMP PRODUCTION} - \text{SUPERNATANT VOLUME}}{\left(\text{STARTING L.LEVEL} - \frac{\text{SUPERNATANT}}{2750} - \text{ENDING L.LEVEL}\right) 2750}$$

$$= \frac{68,302 - 47,000}{\left(82'' - \frac{47,000}{2750} - 34''\right) 2750}$$

$$= 0.25$$

$$\text{FINAL AVERAGE FLOW RATE (MAY 1983)} = \frac{\text{VOLUME PUMPED}}{\text{MINUTES OPERATED}}$$

$$= \frac{1979}{722\,(60)}$$

$$= 0.046 \text{ gpm}$$

DRAINABLE IL REMAINING = (34.0" - 12")(2750)(0.25) = 15.1 Kgal

PUMPABLE IL REMAINING = 0 by definition

Jeff S. Riddell
Calculations made by

Wm R Fulton
Calculations checked by

INTERIM STABILIZATION EVALUATION - NON-JET PUMPED TANKS

Tank: 104-TX

Evaluation (see Continuation Page for calculations and additional comments):

[X] Photograph review completed - Date of most recent photographs April 3,1984

[X] Tank history review completed

[X] Tank temperature profile review completed

Surface Description: Photos show solid surface with small liquid pool in center. Pool area is estimated at 330 square feet. FIC is now hitting a small spot of liquid separated from the larger pool. Date

Solids Level 31.2 " Date 4-3-84 Method photos

Liquid Level 31.2" Date 3-31-84 Method FIC

Solids Volume 64,800 gallons

Estimated Drainable Liquid Volume 14,800 gallons

Average Maximum Tank Temperature, past 6 months 98°F

Estimated Supernatant Volume 500 gallons

[ ] Cost/Benefit Analysis attached

Evaluation Performed by N E Bell Date 4-6-84 Checked by JSR Date 4-9-84

Disposition of Tank:

[X] Tank Interim Stabilized at 14,800 gallons of drainable liquid

[ ] Tank not Interim Stabilized; stabilization activities resumed

Approved by: Manager, TF&EPC RAV [signature] Date 4/10/84

Manager, TFS&O [signature] Date 4-12-84

Program Manager [signature] Date 4-13-84

DISTRIBUTION: TF&EPC Tank File, Tank Farm Surveillance Analysis, Approval Signatures

NOTE: Tank 104-TX was declared Interim Stabilized on 9-19-79. This form is for record purposes only. 2000 gallons of supernatant were removed on 1-24-84 and 1600 gallons were removed on 3-30-84.

INTERIM STABILIZATION EVALUATION - NON-JET PUMPED TANKS

(CONTINUATION PAGE)

Evaluation Calculations and Comments

TANK: 104-TX

Solids level: most of tank 31.2" by photos and FIC
center pool 28.7" taken 2-1-84

Total waste volume (waste level (in.) - 12) x 2750 gal. per in. + 12,500
= (31.2-12) x 2750 + 12,500
= 65,300 gallons

Supernatant volume = area x depth = 332 ft^2 x 2.5/12 ft =69.2 ft^3 = 517 gallons

Solids volume = total waste volume - supernatant volume
= 65,300 - 500 = 64,800 gallons

Drainable interstitial liquid = (solids volume - [capillary height x 2750 gal./in.]) x porosity

For salt cake, capillary height = 12" and porosity = 0.45

DIL = (64,800 - [12 x 2750]) x 0.45 = 14,300 gallons

Drainable liquid remaining = DIL + supernatant = 14,300 + 500 = 14,800 gallons

Calculations by Harry J. Bell Date April 6, 1984
Checked by J.B. Caldwell Date April 5, 1984

INTERIM STABILIZATION EVALUATION - JET PUMPED TANKS

Tank: 105-TX

Reason Jet Pumping Halted:

[X] Meets 0.05 gpm Criteria, Date of Shutdown Aug. 8, 1983

[ ] Major Failure of Jet Pump, Date of Shutdown

Additional Comment:

Evaluation: (See Continuation Sheet for calculations and additional comment)

Starting Liquid Level 147.5" Date March 30, 1982

Supernatant Volume 0 Date March 30, 1982

Final Liquid Level Measured After Equilibration of Interstitial Liquid:

Dip Tubes 31.3" Date Sept. 22, 1983

LOW 28.8" (gamma), 27.6" (neutron) Date Aug. 25, 1983

Manual - Date -

Total Net Jet Pump Production 121,533 gal

Calculated Solid Characteristics:

Porosity 0.38

Permeability/Viscosity (K/μ) -

Capillary Height 12" (assumed)

Estimated Drainable Liquid Remaining 20,200 gal

Final Average Flowrate 0.022 gpm Date Aug. 1-8, 1983

Evaluation Performed by N.E. Bell Date Sept. 23, 1983

Disposition of Tank:

[X] Tank Interim Stabilized at 20.2 thousand gallons of Drainable Liquid
0 thousand gallons of Pumpable Liquid

[ ] Tank Not Interim Stabilized; Jet Pumping Restarted

Approval By: Manager, TF&EPC RAJ [signature] Date 9/28/83

Manager, TFS&O [signature] Date 9/29/83

Program Manager [signature] Date 9/29/83

DISTRIBUTION: TF&EPC Tank File, HS&E Surveillance Analysis, Approval Signatures

INTERIM STABILIZATION EVALUATION - JET PUMPED TANKS

(CONTINUATION PAGE)

Evaluation Calculations and Comments

TANK: 105-TX

Liquid Level (LL) by Dip Tubes (by Manometer)

8/26	Weight Factor	39.43"	
9/7	Weight Factor	39.44"	
9/22	Weight Factor	40.1 "	
9/7	Specific Gravity	1.428	average 1.47
9/22	Specific Gravity	1.51	

$$\text{Liquid Level} = \frac{\text{Weight Factor}}{\text{Specific Gravity}} + \text{Height of Tubes Above Bottom}$$

$$= \frac{40.1}{1.47} + 4 = 31.3"$$

Liquid Level by LOW

gamma 28.8"
neutron 27.6"

Porosity

$$\text{Porosity} = \frac{\text{Net Production}}{(\text{Initial Interstital LL} - \text{Current Interstitial LL}) \times 2750 \frac{\text{gal}}{\text{in.}}}$$

$$= \frac{121{,}533 \text{ gal}}{(147.5-31.3) \text{ in} \times 2750 \frac{\text{gal}}{\text{in.}}} = 0.380$$

Drainable Liquid

$$= (\text{Current Interstitial LL} - \text{Capillary Height}) \times \text{Porosity} \times 275$$

$$= (31.3 - 12) \text{ in.} \times 0.38 \times 2750$$

$$= 20{,}169 \text{ gal}$$

Final Flowrate (Aug)

$$= \frac{234 \text{ gal}}{176 \text{ h} \times 60 \text{ min/h}} = 0.022 \text{ gpm}$$

Calculations Checked By

[signature] Date 9/28/83

Stabilization Evaluation

Tank: 106-TX

Reason Jet Pumping Halted:

[ ] Management Decision, Date of Shutdown _____

[X] Major Failure of Jet Pump, Date of Shutdown 4-16-83

Additional Comment:

Shutdown was due to electrical failure of the pump motor.

Evaluation: (See Sheet 2 for calculations and additional comment)

Starting Liquid Level 156" Date 12-18-81

Supernatant Volume 37,400 Date 12-18-81

Final Liquid Level Measured After Equilibration of Interstitial Liquid:

Dip Tubes 64" Date 5-24-83

LOW --- Date _____

Manual 67.2" Date 5-12-83

Total Net Jet Pump Production 134.6 kgal

Calculated Solid Characteristics:

Porosity 0.47

Permeability/ Viscosity ($^{K}/_{\mu}$) 0.72*

Capillary Height 4.9 ft*

Estimated Drainable Liquid Remaining 11 kgal

Final Average Flowrate 0.06 gpm Date March & April 1983

Evaluation Performed by S. J. Joncus Date 6-7-83

Disposition of Tank:

[X] Tank Interim Stabilized at 11 thousand gallons of Drainable Liqu:
0 thousand gallons of Pumpable Liquic

[ ] Tank Not Interim Stabilized; Jet Pumping Restarted

Approval By: Manager, TF&EPC RAV [signature] Date 6/8/83

Manager, TFS&O [signature] Date 6-8-83

Program Manager [signature] Date 6-8-83

Distribution: TF&EPC Tank File, HS&E Surveillance Analysis, Approval Signatur.

Evaluation Calculations and Comment

TANK: 106-TX

Manual (Zip Cord) - Distance from top of cover plate to liquid = 42.38'

Cover plate elevation = 671.71'
Bottom elevation = 623.73'

Current LL = 671.71 - 623.73 - 42.38 = 5.6' = 67.2"

Current Production = 134645
Capillary Height = 4.9' = 58.8"
Starting Supernatant = 37400
Starting LL = 156"

$$\text{Porosity} = \frac{\text{Jet Pump Production} - \text{Supernatant}}{\left[\text{Starting LL} - \frac{\text{Supernatant}}{2750} - \text{Current LL}\right] 2750 \text{ gal/in.}}$$

$$= \frac{134645 - 37400}{\left(\left[156 - \frac{37400}{2750}\right] - 67.2\right) 2750} = 0.470$$

$$\text{Final Average Flowrate (Mar + April '83)} = \frac{\text{Volume Pumped}}{\text{Minutes Operated}}$$

$$= \frac{1790 + 2207}{60[363 + 717]} = 0.06 \text{ gpm}$$

Drainable IL Remaining = [67.2 - (4.9)(12)][2750][0.470] = 10.9 kgal

Pumpable IL Remaining = 10.9 kgal - 18"(2750)(0.470) = 0 kgal

* Values calculated by D.E. Kurath of the Waste Management Process Technology Group. The capillary height calculated was physically verified by lancing the solids. During lancing an impenetrable layer of solids was found at 4½ feet

INTERIM STABILIZATION EVALUATION - NON-JET PUMPED TANKS

Tank: 107-TX

Evaluation (see Continuation Page for calculations and additional comments):

[X] Photograph review completed - Date of most recent photographs 1/17/84

[X] Tank history review completed

[X] Tank temperature profile review completed

Surface Description: A supernatant pool covers approximately 10% of the tanks surface. The remainder of the surface is saltcake.

Date

Solids Level 20.4 " Date 1/13/84 Method FIC

Liquid Level 20.4" Date 1/13/84 Method FIC

Solids Volume 35,000 gal

Estimated Drainable Liquid Volume 1,800 gal

Average Maximum Tank Temperature, past 6 months 72°F

Estimated Supernatant Volume 800 gal

[ ] Cost/Benefit Analysis attached

Evaluation Performed by [illegible] Date 1/17/84 Checked by MSB Date 1/20/84

Disposition of Tank:

[X] Tank Interim Stabilized at 1,800 gallons of drainable liquid

[ ] Tank not Interim Stabilized; stabilization activities resumed

Approved by: Manager, TF&EPC RAV [illegible] Date 1-24-84

Manager, TFS&O [illegible] Date 1-25-84

Program Manager [illegible] Date 1-26-84

DISTRIBUTION: TF&EPC Tank File, Tank Farm Surveillance Analysis, Approval Signatures

NOTE: Tank 107-TX was previously Interim Stabilized on 10/19/79. This form is for record purposes only.

INTERIM STABILIZATION EVALUATION

TANK NUMBER: 107-TX EFFECTIVE DATE: 10-19-79

LIQUID LEVEL & RISER NO. FIC R-8 20.35"
M.T. R-11 - 20.75"

SOLIDS LEVEL & RISER NO. CD-14 - 22.0"
M.T. 20.75"

EST. SUPERNATE LIQUID VOLUME *1,000 Gallons

EST. DRAINABLE INTERSTITIAL LIQUID VOLUME **12,000 Gallons

This figure is based on the assumption that salt cake contains 30% by volume drainable interstitial liquid.

TEMPERATURE: Maximum 66°F

IS TANK HEAT LOAD A PROBLEM?

yes ____ no X unknown ____

IS THERE A POTENTIAL DOME LOAD PROBLEM? yes ____ no X

PHOTOGRAPH EVALUATION: (Order #7801790 : Liquid Level 21.0" ; Date 2-16-78)
The surface is 75% solids. The liquid shows as a liquid pool at tank center. There is a submersible pump installed in the pool. The manual tape is touching on solids and the FIC is touching at the liquid-solids interface.

COMMENTS: *The submersible pump was installed to pump the remaining surface liquid. All attempts to pump this liquid pool failed.

** The 22.0" solids level carried in CD-14 was established through photographic analysis and solids level readings. This volume of solids and the amount of liquid in the surface pool yields approximately 13,000 gallons of drainable liquid. This meets the criteria in RHO-CD-330 for interim stabilization.

ADVANCED STABILIZATION RECOMMENDATION: This tank appears to be a good canidate for air drying.

Prepared By: H. Dennis Trayer

Reviewed By: John M. Bailey 10-19-79

INTERIM STABILIZATION EVALUATION - NON-JET PUMPED TANKS

(CONTINUATION PAGE)

Evaluation Calculations and Comments

TANK: 107-TX

TOTAL WASTE VOLUME = (WASTE LEVEL (IN) - 12 IN) x 2750 gal/in + 12,500 gal

WASTE LEVEL = 20.4"

TOTAL WASTE VOLUME = (20.4 - 12) in x 2750 gal/in + 12,500 gal = 35,600 gallons ≈ 36,000 g.

SUPERNATANT POOL ESTIMATED FROM PHOTOS TO COVER 10% OF SURFACE AT AN AVERAGE DEPTH OF 3 inches.

SUPERNATANT VOLUME = .10 x 2750 gal/IN x 3 IN = 825 gallons ≈ 800 gallons.

SOLIDS VOLUME = TOTAL WASTE VOLUME - SUPERNATANT VOLUME

SOLIDS VOLUME = 36,000 gallons - 800 gallons = 35,200 gallons. ≈ 35,000 gallons.

DRAINABLE INTERSTITIAL LIQUID (DIL) = (SOLIDS VOLUME - 33,000 gallons) x porosity

SALTCAKE POROSITY = 45%

DIL = (35,000 gallons - 33,000 gallons) x .45 = 900 gal ≈ 1000 gal

DRAINABLE LIQUID REMAINING = DIL + SUPERNATANT

DRAINABLE LIQUID REMAINING = 1000 gallons + 800 gallons = 1800 gallons

CALCULATIONS DONE BY [illegible]

CHECKED BY Nancy E. Bell

Stabilization Evaluation

Tank: 108 TX

Reason Jet Pumping Halted:

[ ] Management Decision, Date of Shutdown _____

[X] Major Failure of Jet Pump, Date of Shutdown 01/12/83

Additional Comment:

108-TX was not restarted after 01/12/83 due to a leak.

Evaluation: (See Sheet 2 for calculations and additional comment)

Starting Liquid Level 55" Date 12/03/81

Supernatant Volume 12 kgal Date 12/03/81

Final Liquid Level Measured After Equilibration of Interstitial Liquid:

Dip Tubes 19.6" Date 03/15/83

LOW - Date -

Manual - Date -

Total Net Jet Pump Production 13.7 kgal

Calculated Solid Characteristics:

Porosity 0.02

Permeability/ Viscosity ($^{K}/_{\mu}$) -

Capillary Height 12" assumed

Estimated Drainable Liquid Remaining 0

Final Average Flowrate 0.002 gpm Date Dec. 1982 & Jan. 1983

Evaluation Performed by S. J. Joncus Jr. Date 03/17/83

Disposition of Tank:

[X] Tank Interim Stabilized at 0 thousand gallons of Drainable Liquid,
0 thousand gallons of Pumpable Liquid.

[ ] Tank Not Interim Stabilized; Jet Pumping Restarted

Approval By: Manager, TF&EPC [signature] Date 3/22/93

Manager, TFS&O [signature] Date 3/24/93

Program Manager [signature] Date 3/28/93

Distribution: TF&EPC Tank File, HS&E Surveillance Analysis, Approval Signatures.

Evaluation Calculations and Comment

TANK: 108-TX

Weight Factor = 19.5"
Specific Gravity = 1.25

$$\text{Current LL} = \frac{19.5}{1.25} + 4 = 19.6"$$

Starting LL = 55"
Starting Supernatant = 12 kgal
Current Production = 13656

$$\text{Porosity} = \frac{\text{Jet Pump Prod.} - \text{Supernatant}}{\left[\text{Starting LL} - \frac{\text{Supernatant}}{2750} - \text{Current LL}\right] 2750 \frac{\text{gal.}}{\text{in.}}}$$

$$= \frac{13656 - 12000}{\left[55 - \frac{12000}{2750} - 19.6\right] 2750} = 0.02$$

$$\text{Drainable IL Remaining} = [\text{Current LL} - \text{Capillary Height}]\,[2750\ \text{gal/in.}]\,[\text{por}$$

$$= [19.6 - 12][2750][0.02] = 0 \text{ kgal}$$

$$\text{Final Average Flowrate (Dec '92 - Jan '93)} = \frac{\text{Volume Pumped}}{\text{Minutes Operated}}$$

$$= \frac{35 \text{ gal.}}{246 \text{ hrs.}} = 0.002 \text{ gpm}$$

Pumpable IL Remaining = 0 by definition

Stabilization Evaluation

Tank: 109-TX

Reason Jet Pumping Halted:

[ ] Management Decision, Date of Shutdown _____

[X] Major Failure of Jet Pump, Date of Shutdown 3-4-83

Additional Comment: 109-TX was shut down due to a pump leak which contaminated the cover plate. Additional problems identified at shut down were 1) leaking foot valve, 2) plugged DOV, 3) plugged dip tubes, and 4) leaking JR-2 valve.

Evaluation: (See Sheet 2 for calculations and additional comment)

Starting Liquid Level 170" Date 3-16-82

Supernatant Volume 0 Date 3-16-82

Final Liquid Level Measured After Equilibration of Interstitial Liquid:

Dip Tubes - Date _____

LOW 90" Date 3-17-83

Manual 111.8" Date 4-1-83

Total Net Jet Pump Production 72.3 K gal

Calculated Solid Characteristics:

Porosity 0.452

Permeability/ Viscosity ($^{K}/_{\mu}$) 0.76*

Capillary Height 104"*

Estimated Drainable Liquid Remaining 10 K gal

Final Average Flowrate 0.04 Date 2-20-83 to 3-4-83

Evaluation Performed by S. J. Joncus Date 4-11-83

Disposition of Tank:

[X] Tank Interim Stabilized at 10 thousand gallons of Drainable Liquid,
0 thousand gallons of Pumpable Liquid.

[ ] Tank Not Interim Stabilized; Jet Pumping Restarted

Approval By: Manager, TF&EPC RAV [signature] Date 4/15/83

Manager, TFS&O [signature] Date 4/18/83

Program Manager [signature] Date _____

Distribution: TF&EPC Tank File, HS&E Surveillance Analysis, Approval Signatures.

Evaluation Calculations and Comment

TANK: 109-TX

Manual (Zip Cord) - Distance from top of baseplate to liquid = 30' 7½"
= 30.63'

Riser Elevation = 664.76'
Bottom elevation = 624.73'
Pump baseplate = 1" = 0.08'

Current LL = [664.76 + 0.08] - 624.73 - 30.63 = 9.32' = 111.8"

Current Production = 72302
Capillary Height = 104."
Starting Supernatant = 0
Starting LL = 170"

$$\text{Porosity} = \frac{\text{Jet Pump Production}}{[\text{Starting LL} - \text{Current LL}]\ 2750}$$

$$= \frac{72302}{[170 - 111.8]\ 2750} = 0.452$$

Drainable IL Remaining = [Current LL - Capillary Height] [2750] [porosity]
= [111.8 - 104.] [2750] [0.452]
= 9.7 kgal

$$\text{Final Average Flowrate} = \frac{\text{Gallons Pumped}}{\text{Minutes Operated}} \quad (2\text{-}20\text{-}83 \text{ to } 3\text{-}4\text{-}83)$$

$$= \frac{548 + 93}{[178 + 67]\ 60}$$

= 0.04 gpm

Pumpable IL Remaining = 0 by definition

* Values calculated by D.E. Kurath of the Waste Management Process Technology Group. Refer to Internal Letter # 65411-83-024, D.E. Kurath to K.G. Carruthers, "Low Pumpout Rates from Tank 109-TX", February 7, 1983. The specific values of K/μ = 0.76 and cap. ht. = 104" were recalculated based on a 45% porosity as opposed to 34% used in the letter.

Stabilization Evaluation

Tank: 110-TX

Reason Jet Pumping Halted:

[X] Management Decision, Date of Shutdown 12-15-82

[ ] Major Failure of Jet Pump, Date of Shutdown _____

Additional Comment: 110-TX was not restarted due to very low production rates.

Evaluation: (See Sheet 2 for calculations and additional comment)

Starting Liquid Level 194" Date 12-18-81

Supernatant Volume 0 Date 12-18-81

Final Liquid Level Measured After Equilibration of Interstitial Liquid:

Dip Tubes 33.0 Date 3-24-83

LOW Neutron - 32.4" Gamma - 33.6" Acoustic - 34.7' Date N:3-4-83 G:3-3-83 A:3-16-83

Manual - Date _____

Total Net Jet Pump Production 115.4 K gal

Calculated Solid Characteristics:

Porosity 0.261

Permeability/ Viscosity ($^{K}/_{\mu}$) -

Capillary Height 12" (assumed)

Estimated Drainable Liquid Remaining 15 K gal

Final Average Flowrate 0.05 gpm Date November & December 1982

Evaluation Performed by S. J. Joncus Date 3-25-83

Disposition of Tank:

[X] Tank Interim Stabilized at 15 thousand gallons of Drainable Liquid,
0 thousand gallons of Pumpable Liquid.

[ ] Tank Not Interim Stabilized; Jet Pumping Restarted

Approval By: Manager, TF&EPC RAW [signature] Date 4/1/83

Manager, TFS&O [signature] Date 4/4/83

Program Manager [signature] for RAZ Date 4/5/83

Distribution: TF&EPC Tank File, HS&E Surveillance Analysis, Approval Signatures.

Evaluation Calculations and Comment

TANK: 110-TX

Weight Factor 39.2
Specific Gravity 1.35

Current LL = $\frac{39.2}{1.35} + 4 = 33.0''$

Starting LL = 194"

Starting Supernatant = 0

Current Production = 115432 gallons

$$\text{Porosity} = \frac{\text{Jet Pump Production}}{[\text{Starting LL} - \text{Current LL}]\ 2750}$$

$$= \frac{115432}{[194 - 33.0]\ 2750} = 0.261$$

$$\text{Drainable IL Remaining} = [\text{Current LL} - \text{Capillary Height}]\ [2750\ \text{gal/in}]\ [\text{porosity}]$$

$$= [33.0 - 12]\ [2750]\ [0.261] = 15.1\ \text{kgal}$$

$$\text{Final Average Flowrate} = \frac{\text{Gallons Pumped}}{\text{minutes operated}}$$

$$= \frac{104 + 2856}{[310 + 663]\ \text{hr}\ [60]} = 0.051\ \text{gpm}$$

Pumpable IL Remaining = 0 by definition

Stabilization Evaluation

Tank: 111-TX

Reason Jet Pumping Halted:

[X] Management Decision, Date of Shutdown 12-15-82

[ ] Major Failure of Jet Pump, Date of Shutdown _____

Additional Comment: Pump not restarted due to difficulty with priming. Placed on observation mode because of low flow-rates experienced.

Evaluation: (See Sheet 2 for calculations and additional comment)

Starting Liquid Level 173" Date 1-29-82

Supernatant Volume 33,000 Date 1-29-82

Final Liquid Level Measured After Equilibration of Interstitial Liquid:

Dip Tubes 30" Date 3-15-83

LOW - Date _____

Manual - Date _____

Total Net Jet Pump Production 98.5 K gal

Calculated Solid Characteristics:

Porosity 0.182

Permeability/ Viscosity (K/μ) -

Capillary Height 12" (assumed)

Estimated Drainable Liquid Remaining 9 K gal

Final Average Flowrate 0.05 gpm Date December 1982

Evaluation Performed by S. J. Joncus Date 3-24-83

Disposition of Tank:

[X] Tank Interim Stabilized at 9 thousand gallons of Drainable Liquid,
0 thousand gallons of Pumpable Liquid.

[ ] Tank Not Interim Stabilized; Jet Pumping Restarted

Approval By: Manager, TF&EPC RAV [signature] Date 3/31/93

Manager, TFS&O [signature] Date 4/4/83

Program Manager H Sparkman for RAZ Date 4/5/83

Distribution: TF&EPC Tank File, HS&E Surveillance Analysis, Approval Signatures.

Evaluation Calculations and Comment

TANK: 111 TX

Weight Factor 35
Specific Gravity 1.35

Current LL : $\frac{35}{1.35} + 4 = 30''$

Starting LL = 173"

Starting Supernatant: 33000 gallons

Current Production = 98477 gallons

$$\text{Porosity} = \frac{\text{Jet Pump Production} - \text{Supernatant}}{\left[\text{Starting LL} - \frac{\text{Supernatant}}{2750} - \text{Current LL}\right] 2750 \text{ gal/in.}}$$

$$= \frac{98477 - 33000}{\left[173 - \frac{33000}{2750} - 30\right] 2750} = 0.182$$

$$\text{Drainable IL Remaining} = [\text{Current LL} - \text{Capillary Height}][2750][\text{porosity}]$$

$$= [30 - 12][2750][0.192] = 9.0 \text{ kgal}$$

$$\text{Final Average Flowrate} = \frac{\text{Gallons Pumped}}{\text{Minutes Operated}}$$

$$= \frac{817}{[262]\,60} = 0.052 \text{ gpm}$$

Pumpable IL Remaining = 0 by definition

Stabilization Evaluation

Tank: 112-TX

Reason Jet Pumping Halted:

[ ] Management Decision, Date of Shutdown _____

[X] Major Failure of Jet Pump, Date of Shutdown 11-17-82

Additional Comment: Shutdown of 112-TX was due to a failed low pressure switch (PS-1).

Evaluation: (See Sheet 2 for calculations and additional comment)

Starting Liquid Level 245.6" Date 12-7-81

Supernatant Volume 9 K gal Date 12-7-81

Final Liquid Level Measured After Equilibration of Interstitial Liquid:

Dip Tubes 62.5" Date 3-24-83

LOW Gamma - 69.6" Date 3-3-83

Manual - Date _____

Total Net Jet Pump Production 94.0 K gal

Calculated Solid Characteristics:

Porosity 0.173

Permeability/ Viscosity ($^{K}/_{\mu}$) -

Capillary Height 12" (assumed)

Estimated Drainable Liquid Remaining 24 K gal

Final Average Flowrate 0.04 gpm Date November 1982

Evaluation Performed by S. J. Joncus Date 3-25-83

Disposition of Tank:

[X] Tank Interim Stabilized at 24 thousand gallons of Drainable Liquid,
0 thousand gallons of Pumpable Liquid.

[ ] Tank Not Interim Stabilized; Jet Pumping Restarted

Approval By: Manager, TF&EPC RAV [signature] Date 3/31/83

Manager, TFS&O G. T. Dukelow Date 4/4/83

Program Manager H. Sparklemeier for RHZ Date 4/5/83

Distribution: TF&EPC Tank File, HS&E Surveillance Analysis, Approval Signatures.

Evaluation Calculations and Comment

TANK: 112 TX

Weight Factor 79
Specific Gravity 1.35

Current LL : $\frac{79}{1.35} + 4 = 62.5''$

Starting LL : 245.6"

Starting Supernatant = 9000

Current Production = 94017 gallons

$$\text{Porosity} = \frac{\text{Jet Pump Prod.} - \text{Supernatant}}{\left[\text{Current LL} - \frac{\text{Supernatant}}{2750} - \text{Starting LL}\right] 2750 \text{ gal/in}}$$

$$= \frac{94017 - 9000}{\left[245.6 - \frac{9000}{2750} - 64\right] 2750} = 0.173$$

$$\text{Drainable Liquid Remaining} = [\text{Current LL} - \text{Capillary Height}][2750 \text{ gal/in}][\text{porosity}]$$

$$= [62.5 - 12][2750][0.173] = 24.0 \text{ kgal}$$

$$\text{Final Average Flowrate} = \frac{\text{Gallons Pumped}}{\text{minutes Operated}}$$

$$= \frac{953}{(360)\ 60} = 0.044 \text{ gpm}$$

Pumpable IL Remaining = 0 by definition

Stabilization Evaluation

Tank: 113-TX

Reason Jet Pumping Halted:

[ ] Management Decision, Date of Shutdown _____

[X] Major Failure of Jet Pump, Date of Shutdown 5-11-82

Additional Comment: 113-TX shutdown due to an electrical failure of the motor.

Evaluation: (See Sheet 2 for calculations and additional comment)

Starting Liquid Level 88" Date 3-11-82

Supernatant Volume 0 Date 3-11-82

Final Liquid Level Measured After Equilibration of Interstitial Liquid:

Dip Tubes 46.9 Date 3-15-83

LOW — Date _____

Manual — Date _____

Total Net Jet Pump Production 19.2 K gal

Calculated Solid Characteristics:

Porosity 0.170

Permeability/ Viscosity ($^{K}/_{\mu}$) —

Capillary Height 12" (assumed)

Estimated Drainable Liquid Remaining 16 K gal

Final Average Flowrate 0.03 gpm Date May 1982

Evaluation Performed by S. J. Joncus Date 3-17-83

Disposition of Tank:

[X] Tank Interim Stabilized at 16 thousand gallons of Drainable Liquid.
0 thousand gallons of Pumpable Liquid.

[ ] Tank Not Interim Stabilized; Jet Pumping Restarted

Approval By: Manager, TF&EPC CAV [signature] Date 4/1/93

Manager, TFS&O [signature] Date 4/4/83

Program Manager [signature] for RAZ Date 4/5/83

Distribution: TF&EPC Tank File, HS&E Surveillance Analysis, Approval Signatures.

Evaluation Calculations and Comment

TANK: 113TX

Weight Factor 60
Specific Gravity 1.4

Current LL: $\frac{60}{1.4} + 4 = 46.9''$

Starting LL: 88"

Supernatant = 0

Current Production: 19179

$$\text{Porosity} = \frac{\text{Jet Pump Prod.} - \text{Supernatant}}{\left[\text{Starting LL} - \frac{\text{Supernatant}}{2750} - \text{Current LL}\right] 2750 \text{ gal/in}}$$

$$= \frac{19179}{[88 - 46.9][2750][0.170]} = 16.3 \text{ kgal}$$

$$\text{Final Average Flowrate} = \frac{\text{Gallons Pumped}}{\text{Minutes Operated}}$$

$$= \frac{417}{[221]\ 60} = 0.031 \text{ gpm}$$

Pumpable IL Remaining = 0 by definition

Stabilization Evaluation

Tank: 114-TX

Reason Jet Pumping Halted:

[ ] Management Decision, Date of Shutdown _____

[X] Major Failure of Jet Pump, Date of Shutdown 11-24-82

Additional Comment: Shutdown of 114-TX was due to a leak from the JP-1 valve.

Evaluation: (See Sheet 2 for calculations and additional comment)

Starting Liquid Level 213 Date 1-29-82

Supernatant Volume 0 Date 1-29-82

Final Liquid Level Measured After Equilibration of Interstitial Liquid:

Dip Tubes 36.7" Date 3-23-83 -

LOW Gamma - 40.8" Neutron - 43.2" Acoustic - 36.8' Date G:3-3-83 N:3-4-83 A:3-24-83

Manual - Date _____

Total Net Jet Pump Production 104.3 K gal

Calculated Solid Characteristics:

Porosity 0-215

Permeability/ Viscosity ($^{K}/_{\mu}$) -

Capillary Height 12" (assumed)

Estimated Drainable Liquid Remaining 15 K gal

Final Average Flowrate 0.07 gpm Date November 1982

Evaluation Performed by S. J. Joncus Date 3-28-83

Disposition of Tank:

[X] Tank Interim Stabilized at 15 thousand gallons of Drainable Liquid, 4 thousand gallons of Pumpable Liquid.

[ ] Tank Not Interim Stabilized; Jet Pumping Restarted

Approval By: Manager, TF&EPC [signature] Date 4/4/83

Manager, TFS&O [signature] Date 4/4/83

Program Manager [signature] for RAZ Date 4/5/83

Distribution: TF&EPC Tank File, HS&E Surveillance Analysis, Approval Signatures.

Evaluation Calculations and Comment

TANK: 114 TX

Weight Factor 46
Specific Gravity 1.5
2" spool piece under SW screen

Current LL = $\frac{46}{1.5} + 4 + 2 = 36.7"$

Starting LL = 213"

Starting Supernatant = 0

Current Production = 104304 gallons

$$\text{Porosity} = \frac{\text{Jet Pump Production}}{[\text{Starting LL} - \text{Current LL}]\ 2750\ \text{gal/in}}$$

$$= \frac{104304}{[213 - 36.7]\ 2750} = 0.215$$

$$\text{Drainable IL Remaining} = [\text{Current LL} - \text{Capillary Height}]\ [2750\ \text{gal/in.}]\ [\text{porosity}]$$

$$= [36.7 - 12]\ [2750]\ [0.215] = 14.6\ \text{kgal}$$

$$\text{Final Average Flowrate} = \frac{\text{Gallons Pumped}}{\text{Minutes Operated}}$$

$$= \frac{1575}{[377\ \text{hrs}]\ [60]} = 0.070\ \text{gpm}$$

$$\text{Pumpable IL Remaining} = \text{Drainable IL Remaining} - \text{Non Pumpable Drainable Heel}$$

$$= [36.7 - 12]\ [2750]\ [0.215] - [18"]\ [2750]\ [0.215]$$

$$= 4.0\ \text{kgal}$$

INTERIM STABILIZATION EVALUATION - JET PUMPED TANKS

Tank: 115-TX

Reason Jet Pumping Halted:

[X] Meets 0.05 gpm Criteria, Date of Shutdown Aug. 8, 1983

[ ] Major Failure of Jet Pump, Date of Shutdown

Additional Comment:

Evaluation: (See Continuation Sheet for calculations and additional comment)

Starting Liquid Level 183" Date March 30, 1982

Supernatant Volume 0 Date March 30, 1982

Final Liquid Level Measured After Equilibration of Interstitial Liquid:

Dip Tubes 35.4" Date Sept. 22, 1983

LOW 39.6" (gamma), 32.0" (neutron) Date Aug. 25, 1983

Manual - Date

Total Net Jet Pump Production 99,100 gal.

Calculated Solid Characteristics:

Porosity 0.25

Permeability/Viscosity (K/μ)

Capillary Height 12" (assumed)

Estimated Drainable Liquid Remaining 19,100 gal.

Final Average Flowrate 0.047 gpm Date Aug. 1-8, 1983

Evaluation Performed by N.E. Bell Date Sept. 23, 1983

Disposition of Tank:

[X] Tank Interim Stabilized at 19.1 thousand gallons of Drainable Liquid

0 thousand gallons of Pumpable Liquid

[ ] Tank Not Interim Stabilized; Jet Pumping Restarted

Approval By: Manager, TF&EPC RAV Date 9/28/83

Manager, TFS&O Date 9/29/83

Program Manager Date 9/29/83

DISTRIBUTION: TF&EPC Tank File, HS&E Surveillance Analysis, Approval Signatures

INTERIM STABILIZATION EVALUATION - JET PUMPED TANKS

(CONTINUATION PAGE)

Evaluation Calculations and Comments

TANK: 115-TX

Liquid Level (LL) By Dip Tubes (Manometer)

8/26	Weight Factor	25.83"
9/7	Weight Factor	23.12"
9/22	Weight Factor	23.0"
9/7	Specific Gravity	2.72
9/22	Specific Gravity	1.40 ← use

$$LL = \frac{\text{Weight Factor}}{\text{Specific Gravity}} + \text{Height of Tubes Above Bottom}$$

$$= \frac{23.0}{1.4} + 19 = 35.4"$$

LL by LOW

Gamma 39.6" ← use
Neutron 32.0"

$$\text{Porosity} = \frac{\text{Net Production}}{(\text{Initial Interstitial LL-Current Interstitial LL}) \times 2750}$$

$$= \frac{99{,}100 \text{ gal}}{(183-39.6) \text{ in.} \times 2750} = 0.251$$

Drainable Liquid = (Current Interstitial LL-Capillary Height) x Porosity x 2750
= (39.6-12) in. x 0.251 x 2750
= 19,051 gal.

Final Flow Rate (Aug.) $= \frac{467 \text{ gal.}}{166\text{h} \times 60 \frac{\text{min.}}{\text{h}}} = 0.047$ gpm

Calculations Checked By

[illegible] Date 7/25/93.

Stabilization Evaluation

Tank: 116-TX

Reason Jet Pumping Halted:

[X] Management Decision, Date of Shutdown 12-12-82

[ ] Major Failure of Jet Pump, Date of Shutdown _____

Additional Comment:
Pump not restarted due to difficulty in priming. Placed on observation mode because of the low flow rates experienced.

Evaluation: (See Sheet 2 for calculations and additional comment)

Starting Liquid Level 94" Date 3-10-82

Supernatant Volume 0 Date 3-10-82

Final Liquid Level Measured After Equilibration of Interstitial Liquid:

Dip Tubes 52" Date 3-24-83

LOW - Date _____

Manual - Date _____

Total Net Jet Pump Production 23.9 Kgal

Calculated Solid Characteristics:

Porosity ~~0.152~~ 20.7

Permeability/ Viscosity ($^{K}/_{\mu}$) -

Capillary Height 12" (assumed)

Estimated Drainable Liquid Remaining 23 Kgal

Final Average Flowrate 0.02 gpm Date December 1982

Evaluation Performed by S. J. Joncus Date 03-25-83

Disposition of Tank:

[X] Tank Interim Stabilized at 23 thousand gallons of Drainable Liquid,
0 thousand gallons of Pumpable Liquid.

[ ] Tank Not Interim Stabilized; Jet Pumping Restarted

Approval By: Manager, TF&EPC [signature] Date 4/4/83

Manager, TFS&O [signature] Date 4/4/83

Program Manager [signature] for RAZ Date 4/5/83

Distribution: TF&EPC Tank File, HS&E Surveillance Analysis, Approval Signatures.

Evaluation Calculations and Comment

TANK: 116 TX

Weight Factor 48.0
Specific Gravity 1.45
15" Spool Piece Installed Under Pump

$$\text{Current LL} = \frac{48.0}{1.45} + 4 + 15 = 52''$$

Starting LL = 79" + 15" = 94"
Starting Supernatant = 0
Current Production = 23881

$$\text{Porosity} = \frac{\text{Jet Pump Production}}{[\text{Starting LL} - \text{Current LL}][2750\ \text{gal/in}]}$$

$$= \frac{23881}{[94 - 52]\ 2750} = 0.207$$

$$\text{Drainable IL Remaining} = [\text{Current LL} - \text{Capillary Height}][2750\ \text{gal/in.}][\text{porosity}]$$

$$= [52'' - 12''][2750][0.207] = 22.8\ \text{kgal}$$

$$\text{Final Average Flowrate} = \frac{\text{Gallon Pumped}}{\text{Minutes Operated}}$$

$$= \frac{179}{[130]\ 60} = 0.023\ \text{gpm}$$

Pumpable IL Remaining = 0 by definition *

* By definition the pumpable limit is 0.05 gpm which assumes that the pump reaches all the way to the bottom of the saltwell. This is not the case in 116-TX due to 13" of solids in the saltwell screen. However, the pump is at the lowest position considered practical, has reached the lowest practical flowrate, and therefore meets the jet pumping endpoint criteria.

Stabilization Evaluation

Tank: 117 TX

Reason Jet Pumping Halted:

[ ] Management Decision, Date of Shutdown _____

[X] Major Failure of Jet Pump, Date of Shutdown 06/06/82

Additional Comment:

Jet pump shutdown was due to electrical failure of the pump motor.

Evaluation: (See Sheet 2 for calculations and additional comment)

Starting Liquid Level 153" Date 12/18/81

Supernatant Volume 0 Date 12/18/81

Final Liquid Level Measured After Equilibration of Interstitial Liquid:

Dip Tubes plugged Date - -

LOW not installed Date -

Manual (zipcord) 30" Date 03/15/83

Total Net Jet Pump Production 54.3 kgal

Calculated Solid Characteristics:

Porosity 0.160

Permeability/ Viscosity ($^{K}/_{\mu}$) .06*

Capillary Height 12" *

Estimated Drainable Liquid Remaining 8.0 kgal

Final Average Flowrate .03 gpm Date May 1, 1982 to June 6, 1982

Evaluation Performed by S. J. Joncus Jr. Date 03/17/83

Disposition of Tank:

[X] Tank Interim Stabilized at 8.0 thousand gallons of Drainable Liquid, 0 thousand gallons of Pumpable Liquid.

[ ] Tank Not Interim Stabilized; Jet Pumping Restarted

Approval By: Manager, TF&EPC RAV [signature] Date 3/24/83

Manager, TFS&O [signature] Date 3/24/83

Program Manager [signature] Date 3/28/83

Distribution: TF&EPC Tank File, HS&E Surveillance Analysis, Approval Signatures.

Evaluation Calculations and Comment

TANK: 117 TX

Distance from top of pump baseplate to IL level = 41.0'

Flange elevation = 667.13'

Bottom elevation = 623.73'

Distance from top of pump baseplate to bottom of tank = $667.13 - 623.73 + \frac{1}{12} = 43.48'$

Current IL level = $43.48' - 41.0' = 2.48' = 30''$

$$\text{Porosity} = \frac{\text{Jet Pump Production}}{[\text{Starting ILL} - \text{Current ILL}]\ 2750\ \frac{\text{gallons}}{\text{inch}}}$$

$$= \frac{54255}{[153-30]\ 2750} = 0.160$$

Drainable IL Remaining = [Current ILL - Capillary Height] [2750 gal/in] [porosity]

$= [30-12][2750][0.160] = 8$ kgal

Pumpable IL Remaining = Drainable IL Remaining - Non Pumpable Drainable Heel

$= [30-12][2750][0.160] - 18''\ [2750][0.160] = 0$ kgal

$$\text{Average Flowrate for May + June '82} = \frac{\text{Volume Pumped}}{\text{Minutes Operated}}$$

$$= \frac{[147 + 1267]\ \text{gal}}{[128 + 623]\ \text{hrs}\ [60\ \frac{\text{min}}{\text{hr}}]} = 0.03\ \text{gpm}$$

* Jet pump flowrates at the end of jet pumping match the theoretical model using these estimated values for K/μ and capillary height.

Stabilization Evaluation

Tank: 118-TX

Reason Jet Pumping Halted:

[ ] Management Decision, Date of Shutdown _____

[X] Major Failure of Jet Pump, Date of Shutdown 02-11-83

Additional Comment:

Shutdown of the 118-TX jet pump was caused by an electrical failure of the centrifigal pump motor.

Evaluation: (See Sheet 2 for calculations and additional comment)

Starting Liquid Level 123" Date 02-01-82

Supernatant Volume 13Kgal Date 02-01-82

Final Liquid Level Measured After Equilibration of Interstitial Liquid:

Dip Tubes 39.7 Date 03-24-83

LOW Gamma - 40.8" Date 3-3-83

Manual - Date _____

Total Net Jet Pump Production 89.1 Kgal

Calculated Solid Characteristics:

Porosity 0.352

Permeability/ Viscosity (K/μ) -

Capillary Height 12" (assumed)

Estimated Drainable Liquid Remaining 27 Kgal

Final Average Flowrate 0.02 gpm Date February 1983

Evaluation Performed by S. J. Joncus Date 03-25-83

Disposition of Tank:

[X] Tank Interim Stabilized at 27 thousand gallons of Drainable Liquid.
0 thousand gallons of Pumpable Liquid.

[ ] Tank Not Interim Stabilized; Jet Pumping Restarted

Approval By: Manager, TF&EPC [signature] Date 4/4/83

Manager, TFS&O [signature] Date 4/4/83

Program Manager [signature] Date 4/5/83

Distribution: TF&EPC Tank File, HS&E Surveillance Analysis, Approval Signatures.

Evaluation Calculations and Comment

TANK: 118TX

Weight Factor 40.8
Specific Gravity 1.14

Current IL level = $\frac{40.8}{1.14} + 4 = 39.7$

Starting LL = 123"

Starting Supernatant = 13 kgal

Current Production = 89137

$$\text{Porosity} = \frac{\text{Jet Pump Production} - \text{Supernatant}}{\left[\text{Starting LL} - \frac{\text{Supernatant}}{2750} - \text{Current LL}\right] 2750 \text{ gal/in.}}$$

$$= \frac{89137 - 13000}{\left[123 - \frac{13000}{2750} - 39.7\right] 2750} = 0.352$$

$$\text{Drainable IL Remaining} = [\text{Current LL} - \text{Capillary Height}][2750 \text{ gal/in}][\text{porosity}]$$

$$= [39.7 - 12][2750][0.352] = 26.8 \text{ kgal}$$

$$\text{Final Average Flowrate} = \frac{\text{Gallons Produced}}{\text{minutes operated}}$$

$$= \frac{323}{[250]\ 60} = 0.022 \text{ gpm}$$

Pumpable IL Remaining = 0 by definition

Stabilization Evaluation

Tank: 101-TY

Reason Jet Pumping Halted:

[X] Management Decision, Date of Shutdown 02-14-83

[ ] Major Failure of Jet Pump, Date of Shutdown _____

Additional Comment:

101-TY was placed on observation mode due to very low flowrates.

Evaluation: (See Sheet 2 for calculations and additional comment)

Starting Liquid Level 50" Date 11-12-82

Supernatant Volume 0 Date 11-12-82

Final Liquid Level Measured After Equilibration of Interstitial Liquid:

Dip Tubes 17" Date 03-24-83

LOW - Date _____

Manual - Date _____

Total Net Jet Pump Production 8.2 Kgal

Calculated Solid Characteristics:

Porosity 0.09

Permeability/ Viscosity (K/μ) -

Capillary Height 12" (assumed)

Estimated Drainable Liquid Remaining 1 Kgal

Final Average Flowrate 0.025 gpm Date February 1983

Evaluation Performed by S. J. Joncus Date 03-27-83

Disposition of Tank:

[X] Tank Interim Stabilized at 1 thousand gallons of Drainable Liquid
0 thousand gallons of Pumpable Liquid.

[ ] Tank Not Interim Stabilized; Jet Pumping Restarted

Approval By: Manager, TF&EPC RAV [signature] Date 4/4/83

Manager, TFS&O [signature] Date 4/4/83

Program Manager H Spankleid for RAZ Date 4/5/83

Distribution: TF&EPC Tank File, HS&E Surveillance Analysis, Approval Signatures

Evaluation Calculations and Comment

TANK: 101-TY

Weight Factor 15.3
Specific Gravity 1.2

Current LL: $\frac{15.3}{1.2} + 4 = 16.8''$

Starting LL: 50"
Starting Supernatant: 0
Current Production: 8213 gal.

$$\text{Porosity} = \frac{\text{Jet Pump Production}}{[\text{Starting LL} - \text{Current LL}]\ 2750\ \text{gal/in.}}$$

$$= \frac{8213}{[50 - 16.8]\ 2750} = 0.09$$

Drainable IL Remaining: [Current LL - Capillary Height][2750 gal/in] [porosity]

$$= [16.8 - 12][2750][0.09] = 1.2\ \text{kgal}$$

$$\text{Final Average Flowrate} = \frac{\text{Gal. Produced}}{\text{Min. Run}}$$

$$= \frac{444}{[292]\ 60} = 0.025\ \text{gpm}$$

Pumpable IL Remaining = 0 by definition

INTERIM STABILIZATION EVALUATION - NON-JET PUMPED TANKS

Tank: 102-TY

Evaluation (see Continuation Page for calculations and additional comments):

[X] Photograph review completed - Date of most recent photographs 3-26-84

[X] Tank history review completed

[X] Tank temperature profile review completed

Surface Description: Solid surface with small liquid pool in center. Pool is about 16 feet in diameter and about 1 inch deep. FIC is now touching solids, Date 3-26-84

Solids Level 30.0 inches Date 2-28-84 Method solids weight

Liquid Level 30.0 inches Date 3-24-84 Method FIC

Solids Volume 62,000 gallons

Estimated Drainable Liquid Volume 13,200 gallons

Average Maximum Tank Temperature, past 6 months 60°F

Estimated Supernatant Volume 100 gallons

[ ] Cost/Benefit Analysis attached

Evaluation Performed by NEBell Date 3-27-84 Checked by JSR Date 3-27-8

Disposition of Tank:

[X] Tank Interim Stabilized at 13,200 gallons of drainable liqu

[ ] Tank not Interim Stabilized; stabilization activities resumed

Approved by: Manager, TF&EPC RN [signature] Date 3/28/84

Manager, TFS&O [signature] Date 3-29-84

Program Manager [signature] Date 4-2-84

DISTRIBUTION: TF&EPC Tank File, Tank Farm Surveillance Analysis, Approval Signatures

★ NOTE: Tank 102-TY was previously declared interim Stabilized on 9/18/79. This form is for record purposes only.

6500 gallons of supernatant was removed on March 23, 1984

INTERIM STABILIZATION EVALUATION - NON-JET PUMPED TANKS

(CONTINUATION PAGE)

Evaluation Calculations and Comments

TANK: 102-TY

Solids Level Riser 3 30" in October 1983
Riser 8 30.0" on Feb. 28, 1984

Total Waste Volume = (Waste Level (in.) −12) x 2750 gal/in. +12500 gal.

= (30−12) x 2750 +12500 = 62,000 gallon

Supernatant Volume = $\left(\frac{15 \text{ foot diameter}}{2}\right)^2 \pi \times \frac{1}{12}$ foot deep

= 15 ft^3 x 7.48 gal/ft^3 = 110 gal.

Solids Volume = Total Waste Volume − Supernatant

= 62,000 −110 ≅ 62,000 gallons

Drainable Interstitial Liquid = (Solids Volume − Capillary Height x 2750 gal/in.) x porosity

For salt cake, Cap. height = 12" Porosity = 0.45

Drainable Interstitial Liquid = DIL = (62,000 − 12 x 2750) x 0.

= 13,100 gallons

Drainable Liquid Remaining = DIL + Supernatant = 13,200 gal

Calculations Performed by Nancy E Bell 3-27-84
DATE

Checked by J S Riddelle 3-27-84
DATE

Stabilization Evaluation

Tank: 103-TY

Reason Jet Pumping Halted:

- [ ] Management Decision, Date of Shutdwon _____
- [x] Major Failure of Jet Pump, Date of Shutdown 12-18-82

Additional Comment: Failed Pressure Switch and plugged DOV. 103-TY was placed on observation mode on 1-3-83.

Evaluation: (See Sheet 2 for calculations and additional comment)

Starting Liquid Level 69" Date 8-23-82

Supernatant Volume 0.2 k gal Date 7-9-82

Liquid Level Measured After Equilibration of:

Dip Tubes 56" Date 2-15-83

LOW 64" (PRELIMINARY EVALUATION) Date 2-23-83

Manual _____ Date _____

Total Net Jet Pump Production 11.5 k gal.

Calculated Solid Characteristics:

Porosity 0.32

Permeability _____

Capillary Height 50"

Estimated Drainable Liquid Remaining 5 k gal.

Final Average Flowrate 0.01 gpm Date Dec. 1982

Evaluation Performed by S. J. Joncus, SIS Unit Date 2-25-83

Disposition of Tank:

- [X] Tank Interim Stabilized at 5000 gallons of Drainable Liquid
- [ ] Tank Not Interim Stabilized; Jet Pumping Restarted

Approval By: Manager, TF&EPC for R A Van Meter Date 2-28-83

Manager, TFS&O [signature] Date 3-1-83

Program Manager [signature] Date 2-28-83

Evaluation Calculations and Comment

TANK: 103-TY

$$\text{POROSITY} = \frac{(11500-200)\,\text{gal}}{(69-56^{*})\,2750} = .32$$

$$\text{DRAINABLE LIQUID REMAINING} = [(56^{*}-50)\,2750]\,.32 = 5.3\ \text{kgal}$$

$$\text{PUMPABLE LIQUID REMAINING} = 0 \text{ by definition}$$

* Note: 56 inch dip tube level was used for evaluation as the LOW level was based on a preliminary evaluation.

INTERIM STABILIZATION EVALUATION - NON-JET PUMPED TANKS

Tank: 104 TY

Evaluation (see Continuation Page for calculations and additional comments):

[X] Photograph review completed - Date of most recent photographs 4/83

[X] Tank history review completed

[X] Tank temperature profile review completed

Surface Description: A supernatant pool approximately 45' in diameter is in the center of the tank. The outer perimeter is sludge. The FIC is contacting liquid. Date 10/25/83

Solids Level 21.5" (R-3) Date 10/25/83 Method Man. Tape

Liquid Level 24.2" Date 10/25/83 Method FIC

Solids Volume 43 kgal

Estimated Drainable Liquid Volume 14.7 kgal

Average Maximum Tank Temperature, past 6 months 80 deg. F Nov.'82'

Estimated Supernatant Volume 3 kgal

[ ] Cost/Benefit Analysis attached

Evaluation Performed by TDKerkpatrick Date 10/83 Checked by NEBell Date 10/25/83

Disposition of Tank:

[X] Tank Interim Stabilized at 14.7 k gallons of drainable liquid

[ ] Tank not Interim Stabilized; stabilization activities resumed

Approved by: Manager, TF&EPC [signature] Date 10/27/83

Manager, TFS&O [signature] Date 10/31/83

Program Manager [signature] Date 11-1-83

DISTRIBUTION: TF&EPC Tank File, Tank Farm Surveillance Analysis, Approval Signatures

INTERIM STABILIZATION EVALUATION - NON-JET PUMPED TANKS

(CONTINUATION PAGE)

Evaluation Calculations and Comments

TANK: 104 TY

TOTAL WASTE VOLUME = (WASTE LEVEL (in.) - 12in) x 2750 gal/in + 12,500 gal

WASTE LEVEL = 24.2" (FIC)

TOTAL WASTE VOLUME = (24.2 - 12) in x 2750 gal/in + 12,500 gal = 46,050 gal ≈ 46,000 gal

SUPERNATANT VOLUME: POOL DEPTH = WASTE LEVEL - SLUDGE LEVEL

WASTE LEVEL = 24.2" SLUDGE LEVEL = 21.5" POOL DEPTH = 24.2" - 21.5" = 2.7" ≈ 3.0"

POOL DIAMETER ESTIMATED AT 45' from 4/5/83 Photos

SUPERNATANT VOLUME = $\pi \times \frac{(45\,ft)^2}{4} \times 3\,in \times \frac{ft}{12\,in} \times 7.48 \frac{gal}{ft^3}$ = 2274 gal ≈ 3000 gal

SOLIDS VOLUME = TOTAL WASTE VOLUME - SUPERNATANT VOLUME

SOLIDS VOLUME = 46,000 gal - 3000 gal = 43,000 gal

DRAINABLE LIQUID = CURRENT INTERSTITIAL L.L. - CAPILLARY HEIGHT x 2750 gal/in x Porosity + SUPERNATANT LIQUID

CURRENT INTERSTITIAL L.L. ASSUMED TO EQUAL solids LEVEL. CAPILLARY HEIGHT ASSUMED TO BE 12". A 'worst-case' porosity of 45% WAS USED.

DRAINABLE LIQUID = (21.5 - 12) in x 2750 gal/in x .45 + 3000 gal = 14,756 gal ≈ 14,700 gal

Tim D. Kirkpatrick

checked by Nancy L Bell

Stabilization Evaluation

Tank: 105-TY

Reason Jet Pumping Halted:

[X] Management Decision, Date of Shutdwon 12-10-82

[ ] Major Failure of Jet Pump, Date of Shutdown _____

Additional Comment: Several attempts to flush the saltwell screen to increase flowrate resulted in only the flush water being pumped out again. Pumping of 105-TY was halted on the basis that it contains undrainable sludge.

Evaluation: (See Sheet 2 for calculations and additional comment)

Starting Liquid Level 91" Date 11-4-82

Supernatant Volume 0 Date 4-28-82

Liquid Level Measured After Equilibration of:

Dip Tubes 70" Date 2-15-83

LOW NA Date _____

Manual _____ Date _____

Total Net Jet Pump Production 3.6 k gal

Calculated Solid Characteristics:

Porosity 0.06

Permeability _____

Capillary Height 70"

Estimated Drainable Liquid Remaining 0

Final Average Flowrate 0.00 Date Dec. 1982

Evaluation Performed by S. J. Joncus, SIS Unit Date 2-25-83

Disposition of Tank:

[X] Tank Interim Stabilized at 0 gallons of Drainable Liquid

[ ] Tank Not Interim Stabilized; Jet Pumping Restarted

Approval By: Manager, TF&EPC for E.A. Van Keuren Date 2-28-83

Manager, TFS&O G. T. Dukelow Date 3-1-83

Program Manager R. A. Zinsli Date 2-28-83

Evaluation Calculations and Comment

TANK: 105-TY

$$\text{POROSITY} = \frac{3600 \text{ gal}}{[(91-70)2750]} = .06$$

$$\text{DRAINABLE LIQUID REMAINING} = [(70-70)2750].06 = 0 \text{ kgal}$$

$$\text{PUMPABLE LIQUID REMAINING} = 0 \text{ by definition}$$

INTERIM STABILIZATION

TANK: 106-TY EFFECTIVE DATE: 11-30-78

TEMPERATURE: 120°F MAX 61°F MIN

SAMPLE REQUIRED: YES ☐ NO ☒

PHOTO EVALUATION: YES ☒ NO ☐

COMMENTS: TANK 241-TY-106 has been changed from Leaker-Primary Stabilized-Partially Isolated to Leaker-Interim Stabilized-Partially Isolated.

The temperature and photo evaluation sheets are attached to this form. Tank 106-TY was changed to interim stabilized because it has no surface liquid, < 2 ft of solids, and no temperature problem. There is no sample required for interim stabilization of this tank.

Tank: 106-TY

Photo Date: 1-10-78

Photo I.D: 7800281

Liquid Level: 1'2"

Observation of Surface: The tank surface is 100% dry cracked solids. Diatomaceous earth has been added to stabilize surface liquid.

Salt Well Status: NO SW Casing installed. There is no pump of any kind visible.

Lollipops? ___ Yes X No

Other: The manual tape is touching on a tangled pile of old tapes. There is one T.C. probe still in the tank.

Interpreted by : V.D. Mayer

Date: 11-29-78

Reviewed by :

Date :

INTERIM STABILIZATION EVALUATION

TANK NUMBER: 101-U EFFECTIVE DATE: 9/17/79

LIQUID LEVEL & RISER NO. 4.5" R-8

SOLIDS LEVEL & RISER NO. 4.5" R-8

EST. SUPERNATE LIQUID VOLUME 6500 ± 3500* gallons

EST. DRAINABLE INTERSTITIAL LIQUID VOLUME 2000** gallons

TEMPERATURE: 70° F

IS TANK HEAT LOAD A PROBLEM?

yes ____ no X unknown ____

IS THERE A POTENTIAL DOME LOAD PROBLEM? yes ____ no X

PHOTOGRAPH EVALUATION: (Order #87062; L.L. 4.5" ; Date 6/19/79)

Photo clarity was severly reduced by both haze and radiation damage to the film. Although clarity was reduced, closer photos show extensive areas of liquid. Even in the dim views the exposed sludge is discernible. It appears there remains about 60% of the surface as very shallow liquid. There is a considerable buildup of sludge around the perimeter of the tank. See attached diagram for estimated sludge distribution.

* This is a conservative estimate, based on data contained in the attached diagram. The uncertainty is due to the limited solids and liquid level data available and the very poor visibility in the photographs of this tank.

** This volume estimate assumes sludge contains 12.5% by volume drainable interstitial liquid.

4.5" = 12,375 gals
7,000
5375

5,500 solids

4.5"

INTERIM STABILIZATION EVALUATION PAGE 2

ADVANCED STABILIZATION RECOMMENDATIONS:

Air drying or other in situ drying techniques are recommended for this tank to remove the remaining supernatant liquid.

COMMENTS:

Tank 101-U was pumped down as far as possible with a submersible pump in a side riser R-7. Photographs were taken from the opposite side of the tank, riser R-3, to obtain an indication of the amount of liquid that remained, and to determine if it would be desirable to install a pump in the center riser to remove further liquid.

The very foggy photographs indicated sludge piles in the vicinity of all potential pump acess points. At best this would leave only a minimal liquid heel, beneath these risers. Tank Farm Operations were then requested to obtain further liquid and sludge level readings of the tank to verify the photographic evaluation. While attempting to obtain the desired readings, Operations encountered radiation levels of 5 R/hr when a shielding plug was lifted approximately 6 inches above a cover block to a pit. At this time Radiation Monitoring (RM) called off the job due to the high exposure levels.

Due to the relatively small amount of liquid contained in the tank combined with the low probability of removing a significant portion of the liquid, it has been decided that the benefits of attempting to remove additional liquid from the tank could not justify the exposure that personnel would have to take to install the pump.

Prepared By Barry Carl 9-17-79

Reviewed By John M Bailey 9-17-79

Single-Shell Tank Interim Stabilization Evaluation Form

TANK: **241-U-102**

(Jet Pumping only) Reason for stopping jet pumping:

[x] Meets 0.05 gpm criteria, Date of Shutdown ____9/10/01_____

[ ] Major equipment failure, Date of Shutdown _____

Tank Waste Surface Level Condition and Comments: _____ SEE DESCRIPTION PAGE 2 _____

Evaluation: (See continuation page for calculations and additional comments)

Photo/video review completed - Date of most recent photo/video _____02/11/01_____

[x] Tank history, temperature profile and intrusion reviews completed and no anomalies identified

Starting Liquid Level ___ 144.9" _____ Method ____ENRAF_____ Date ___01/20/00___
Final liquid level _____ 72.3" _____ Method _____LOW_____ Date ___06/12/02___
Total Net Pumped Volume ____86.5 Kgal_____
Capillary Height Used in Calculation ___6"____
Final Solids Volume _____288.4 Kgal_____
Final Average Flow rate _____0.042 gpm_____
Estimated Porosity _____0.25 _____
Supernatant Volume Remaining ____ 1065 gal ___
Drainable Interstitial Liquid _____37.1 Kgal_____
Drainable Liquid Remaining _____38.1 Kgal____
Pumpable Liquid Remaining ____ 33.8 Kgal_____

[ ] Justification letter attached (Interim Stabilization System Engineer)

Disposition of Tank:

[x] Tank Interim Stabilized
[ ] Tank Not Interim Stabilized; Re-start Pumping

Evaluation prepared by SST System Engineer: [signature] JFR Date 6/19/02

Evaluation checked by Process Control Engineer: VC Boyles Date 6/19/02

Interim Stabilization System Engineer: [signature] JFR Date 6/19/2K2

APPROVED BY:

Manager, Interim Stabilization Engineering T. M. Horner Date 6/19/02

Manager, Process Engineering [signature] for M.A. Knight Date 6/19/02

Manager, SST Engineering [signature] Date 6/19/02

Single-Shell Tank Interim Stabilization Evaluation Form (cor

EVALUATION CALCULATIONS AND COMMENTS:

TANK: **241-U-102**

The surface of 241-U-102 is primarily a gray-brown colored cracked waste with irregular patches of white salt crystal. Approximately 50% of the waste surface is covered by the salt formations. The surface level slopes slightly from the tank sidewall down to a depression in the center of the tank. This depression is cone shaped and estimated to be 12.5 feet in diameter, at the waste surface level, based on the visible portion of the saltwell screen. The depression is centered on the saltwell screen. The ENRAF probe is located 5 feet from the tank sidewall and reads 139.12 inches. The waste surface appears dry and shows signs of cracking due to saltwell pumping. Liquid observation well (LOW) readings indicate a final interstitial liquid level (ILL) of 72.252 inches. Since there are no current dip tubes readings the LOW adjusted for capillary height will be used for these calculations. There is approximately 5 ft wide pool of visible liquid within the saltwell screen depression. The pool is assumed to follow a cone shape to the center of the dished bottom, making the supernatant estimate 1065 gallons. All levels are based off the tank centerline dished bottom. Calculations do not take into account any retained gas within the waste.

DATA

Final LOW Reading (06/12/02) = 72.252 inches ~ 72.3 inches

Final ENRAF Reading (06/17/02) = 139.12 inches ~ 139.1 inches

Initial Liquid Level at Start of Pumping (01/20/00) = 144.88 inches ~ 144.9 inches

Divergence point of ENRAF and LOW (01/28/00) = 143.208 inches ~ 143.2 inches

Porosity = Net waste pumped from 1/28/00/[(LOW divergence point – final LOW level)*2750 gal/in]

Height of Sludge Layer (34 Kgal) above bottom = 19.8 inches **

Tank Dished Bottom Volume (Lower 12" Height) = 12,500 gallons **

Supernatant Volume (02/11/01 In-Tank Video Estimate)(Cone Shaped) =

pi * (1/3) * (Height (inches)/12) ft * (cone radius')$^{\wedge 2}$ * 7.481 gal/ft$^{\wedge 3}$

D.I.L. = Drainable Interstitial Liquid **
= {[(Final LOW Reading – 12") – (6" Capillary Ht.)]* 2750 gal/in + 12,500 gal}* porosity

D.L.R. = Drainable Liquid Remaining **
= D.I.L. + supernatant liquid

P.L.R. = Pumpable Liquid Remaining **
= D.L.R. – [((18" Unpumpable Ht – 12")* 2750 gal/in + 12,500 gallons) * porosity]

**Reference HNF-2978, Rev. 3
@@Reference HNF-EP-0182-169

Evaluation Prepared by K. [illegible] JFR Date 6/19/02

Evaluation Checked by VC Boyles SLS Date 6/19/02

Single-Shell Tank Interim Stabilization Evaluation Form (cont.)

EVALUATION CALCULATIONS AND COMMENTS:

TANK: **241-U-102**

POROSITY:

Porosity = Net waste pumped (since 1/28/00)/ [(Initial liquid level – final LOW level) *2750 gal/in]

= (82,467 gallons) / [(143.2" – 72.3") * 2750 gal/in] *100% = 42.3%

The data amassed from saltwell pumping of tank 241-U-102 indicates that a direct determination of the effective waste porosity does not represent the waste characteristics. The tank chemistry has been reviewed and tank U-102 is very typical of waste that would be expected in a salt cake tank. Two main factors show that the calculated effective porosity is outside the expected range for a salt cake containing tank. The tank was found to have issues associated with inaccurate dilution water totalizer readings and a relatively high content of retained gas, which effectively masked the porosity calculations. Near the end of the pumping campaign, a digital totalizer was installed to replace the mechanical totalizer on the dilution system. After installation, the observed net waste pumped flow rate quickly fell below 0.05 gpm and the tank was shutdown for stabilization evaluation. The observed discrepancy in the net waste pumped quantity was supported by the LOW readings from December 2000 to August 2001. The LOW readings over this period show no discernable change in recorded levels even though approximately 19,300 gallons of waste was pumped from the tank during the same period. Additionally, the porosity calculation does not account for the release of waste gasses during saltwell pumping. This exclusion drives the porosity value higher as the drop in liquid level is attributed only to liquid waste removal. The combination of these factors leads to inaccuracies in the porosity value; therefore an estimated porosity of 25% will be used. This is based on HNF-2978 Rev. 3, which estimates an average porosity in saltcake waste as 25%.

LOW BASIS:

(Note: The lower 19.8" (34,000 gallons) of the tank volume is sludge @ 15% porosity – Ref. HNF-2978)

DIL = [(72.3" – 19.8" – 6") * 2750 gal/in] * 0.25 + (34,000 gal * 0.15)

= [(127,875 * 0.25) + 5100 gal] = 37,069 gallons (37.1 Kgal)

Note: Supernatant = pi/3 * r^2 * h = pi/3 * (72.3/12) ft * $(4.75\ ft)^{2}$ * 7.481 gal/ft^{3} = 1065 gallons

DLR = DIL + Supernatant = 37,069 gallons + 1065 gallons = 38,134 gallons (38.1 Kgal)

PLR = DLR – [[(18" – 12") * 2750 gal/in + (12,500 gal)]* 0.15]

= 38,134 gal – [(29,000 gal)*0.15] = 38,134 - 4350 = 33,784 gallons (33.8 Kgal)

SOLIDS VOLUME:

The upper waste surface level 139.1 inches (ENRAF level) slopes gradually towards a cone shaped central depression with a top diameter of 12.5 ft. centered on the saltwell screen. The level at the top of the cone is approximately 99.1 inches. The bottom point of the cone is assumed to be the tank bottom. At the time of the video the water level was at 55.2 inches (based on dip tubes) with a diameter at water level of 7.5 ft. However, based on the final LOW readings, the water level is 72.3 inches with a comparative diameter of 9.5 ft.

Evaluation Prepared by KA Hunn JFR Date 6/19/02

Evaluation Checked by VC Boyles GJS Date 6/19/02

Single-Shell Tank Interim Stabilization Evaluation Form (cor

EVALUATION CALCULATIONS AND COMMENTS:

TANK: **241-U-102**

SOLIDS VOLUME (cont.):

The waste surface is approximately level from the ENRAF to the tank wall (5 ft) and therefore a cone frustum can be subtracted from the cylindrical volume to estimate the upper waste volume above the central depression. The middle volume of the tank is calculated by finding the volume of the void space created by the central depression (a cone frustum), and subtracting it from the outer cylindrical volume. The upper and middle volumes are then added to the lower and dish volumes to obtain the total volume as follows:

Volume (upper) = [Vol. of (139.1 in–99.1 in) * 2750 gal/in] – Vol. (cone frustum)

(Where frustum volume is = pi * H/3 ($R_1^{\wedge 2}$ + $R_2^{\wedge 2}$ + sqrt. ($R_1^{\wedge 2}$ * $R_2^{\wedge 2}$)) * 7.481 gal/ft$^{\wedge 3}$)

= 110,000 gal – [(pi * 3.33 ft/3) * ((32.5 ft)$^{\wedge 2}$ + (6.25 ft)$^{\wedge 2}$ + ((32.5 ft)$^{\wedge 2}$ * (6.25 ft)$^{\wedge 2}$)$^{\wedge 0.5}$)] * 7.481 gal/ft$^{\wedge 3}$

= 110,000 gallons – 33,907 gallons = 76,093 gallons

Volume (middle) = [Vol. of (99.1"–72.3") * 2750 gal/in] – Vol. (cone frustum)

= 73,700 gal – [(pi * 2.23 ft/3) * ((6.25 ft)$^{\wedge 2}$ + (4.75 ft)$^{\wedge 2}$ + ((6.25 ft)$^{\wedge 2}$ * (4.75 ft)$^{\wedge 2}$)$^{\wedge 0.5}$)] * 7.481 gal/ft$^{\wedge 3}$

= 73,700 gallons – 1,595 gallons = 72,105 gallons

Volume (lower) = [Vol. of (72.3" – 12")* 2750 gal/in] = 60.3" * 2750 gal/in = 165,825 gallons

SOLIDS CALCULATION FIGURE

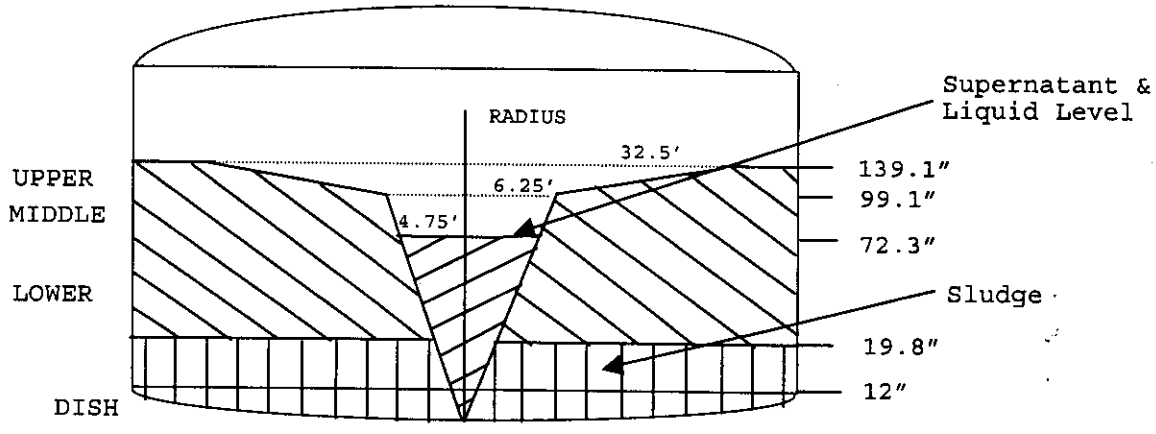

Evaluation Prepared by K. [illegible] JFR Date 6/19/02

Evaluation Checked by VC Boyles SJS Date 6/19/02

Single-Shell Tank Interim Stabilization Evaluation Form (cont.)

EVALUATION CALCULATIONS AND COMMENTS:

TANK: **241-U-102**

SOLIDS VOLUME (cont.):

Volume (Tot) = Vol. (surface) + Vol. (middle) + Vol. (lower) + Vol. dish bottom (lower 12")

Volume (Tot) gallons = 76,093 + 72,105 + 165,825 + 12,500 ≐ 326,523 gallons = 326.5 Kgal

Solids Volume remaining = Volume (tot) – Drainable Liquid Remaining (DLR)

= 326,523 gals – 38,134 gals = 288,389 gallons = 288.4 Kgal

FLOW DATA:

The final pump rate is found by data obtained from 1730 September 9th to 0930 September 10th, 2001 that show a total of 41 gallons of waste were pumped over the time period of 960 minutes (16.0 hours), while the pump ran in AUTOMATIC mode. These data were taken during the final shift of pumping operations on U-102 before the pump was shutdown for stabilization review at 0930 on September 10th, 2001. Pumping of 241-U-102 had been continuous since 1130 hours on September 8th for 46 hours of operation in AUTOMATIC mode (except for a brief period of operation in BYPASS mode) without a shutdown. All data were taken after the final saltwell screen flush on September 9th. The following equation shows the pumping rate for this final pump run:

Pump Rate = [41 gallons/960 minutes] = (0.042 gpm)

All record calculations for this evaluation, as well as other information may be found in the tank history file, per HNF-IP-0842, Vol. 4 Section 4.1, paragraph 3.4.1.

Evaluation Prepared by [signature] JFR Date 6/19/02

Evaluation Checked by VC Boyles SJS Date 6/19/02

Single-Shell Tank Interim Stabilization Evaluation Form.

TANK: **241-U-103**

(Jet Pumping only) Reason for stopping jet pumping:

[x] Meets 0.05 gpm criteria, Date of Shutdown _____05/11/00_____

[ ] Major equipment failure, Date of Shutdown _____

Tank Waste Surface Level Condition and Comments: _____ SEE DESCRIPTION PAGE 2 _____

Evaluation: (See continuation page for calculations and additional comments)

Photo/video review completed - Date of most recent photo/video _____07/26/00_____

[x] Tank history, temperature profile and intrusion reviews completed and no anomalies identified

Starting Liquid Level ___ 179.52" _____ Method ____ENRAF_____ Date ___9/26/99_____
Final liquid level _____ 60.6" _____ Method ____DIP TUBES____ Date ___08/02/00_____
Total Net Pumped Volume ____98.9 Kgal_____
Capillary Height Used in Calculation ___0"____
Final Solids Volume _____383.6 Kgal_____
Final Average Flow rate _____0.035 gpm_____
Calculated Porosity _____N/A_____
Supernatant Volume Remaining ____500 gal ____
Drainable Interstitial Liquid _____33.0 Kgal_____
Drainable Liquid Remaining _____33.5 Kgal____
Pumpable Liquid Remaining ____ 27.8 Kgal_____

[ ] Justification letter attached (Interim Stabilization Cognizant Engineer)

Disposition of Tank:

[x] Tank Interim Stabilized
[ ] Tank Not Interim Stabilized; Re-start Pumping

Evaluation prepared by SST Cognizant Engineer: JM Doelu for K. Hall Date 8/16/00

Evaluation checked by Process Engineer: VC Boyles Date 8/16/00

Interim Stabilization Cognizant Engineer: [signature] Date 8/16/2K

APPROVED BY:

Manager, Interim Stabilization Engineering [signature] Date 8·16·00

Manager, Process Engineering [signature] Date 8/16/00

Manager, SST Engineering R E Larson Date 8/16/00

Single-Shell Tank Interim Stabilization Evaluation Form. (cont.)

EVALUATION CALCULATIONS AND COMMENTS:

TANK: **241-U-103**

The surface of 241-U-103 is a brown colored waste with irregular patches of white salt crystal. Approximately 30% of the waste surface is covered by the salt formations. The surface level slopes slightly from the tank sidewall down to the first of two depressions in the center of the tank. The first depression is cone shaped and estimated to be 23 feet in diameter based on the visible portion of the saltwell screen. A second depression, inside the first, with diameter of 13 feet surrounds the saltwell screen and is cylindrically shaped. The ENRAF probe is located 5 feet from the tank sidewall and reads 163.76 inches. The waste surface appears dry and shows signs of drying and cracking due to saltwell pumping. Liquid observation well (LOW) readings indicate an average adjusted interstitial liquid level (ILL) of 60.2 inches. Dip tube readings are located at the tank center and report an adjusted liquid surface level of 60.6 inches. This level is based on elevation & fabrication drawings that show the dip tubes installed 4 inches above the tank bottom. There is a small pool of supernatant liquid estimated to be 500 gallons. Based on calculations, this liquid is the top surface of the ILL and is visible due to solids removal around the saltwell screen. All levels are based off the tank centerline dished bottom. Calculations do not take into account any retained gas within the waste.

For the purposes of this evaluation, the dip tube readings will be used to determine the final quantities of drainable and pumpable liquid in tank 241-U-103. To calculate drainable interstitial liquid (DIL) using dip tubes, capillary height may not be subtracted in the equation per RPP-5556, Rev. 0. This is due to there being no waste above the liquid in the saltwell screen to retain liquid through capillary forces.

DATA

Final LOW Reading (08/07/00) = 60.156 inches ~ 60.2 inches

Final ENRAF Reading (08/09/00) = 163.76 inches ~ 163.8 inches

Dip Tube Reading (08/02/00) = 56.60 inches + 4 inches (distance off tank bottom)
= 60.60 inches ~ 60.6 inches

Initial Liquid Level from 10/20/99 (ENRAF and LOW divergence point) = 161.2 inches

Porosity = Waste pumped since ~~9/1~~ 10/20 SLS 8/16/00/99 / [(Initial liquid level – final liquid level)*2750 gal/in]

Tank Dished Bottom Volume (Lower 12" Height) = 12,500 gallons ** (assumed sludge)

Supernatant Volume (07/25/00 In-Tank Video Estimate) = 500 gallons

D.I.L. = Drainable Interstitial Liquid ##
= {[(Saturated Solids Ht. – 12") – (0" Capillary Ht.)]* 2750 gal/in + 12,500 gal}* porosity

D.L.R. = Drainable Liquid Remaining **
= D.I.L. + supernatant liquid

P.L.R. = Pumpable Liquid Remaining **
= D.L.R. – [(18" Unpumpable Ht – 12")* 2750 gal/in + 12,500 gallons]* porosity

**Reference HNF-2978, Rev. 1
##Reference RPP-5556, Rev. 0

Evaluation Prepared by JM Daeler for K Hull SLS Date 8/16/00

Evaluation Checked by VC Boyles Date 8/16/00

Single-Shell Tank Interim Stabilization Evaluation Form. (cont.

EVALUATION CALCULATIONS AND COMMENTS:

TANK: **241-U-103**

POROSITY:

Porosity = Net waste pumped (since 10/20/99)/ [(Initial liquid level – final LOW level) *2750 gal/in]

= 64,770 gallons / [(161.2" – 60.2") * 2750 gal/in] = 23.3%

SUPERNATANT:

Supernatant is assumed to be a 13 foot diameter, 6" deep cylindrical pool around saltwell screen.

Volume cylinder) = (pi) * r^2 * h = (pi) * (6.5)^2 * .5 * 7.481 gal/ft^3 = 496 gallons ~ (500 gallons)

DIP TUBE BASIS:

(Note: The bottom 12" (12,500 gallons) of the tank volume is assumed sludge @ 15% porosity)

DIL = [(60.6" – 12") * 2750 gal/in] * 0.233 + (12,500 gal) * 0.15

= [(133,650) * 0.233 + (12,500) * 0.15] = 33,015 gallons (33.0 Kgal)

DLR = DIL + Supernatant = 33,015 gallons + 500 gallons = 33,515 gallons (33.5 Kgal)

PLR = DLR – [(18" – 12") * 2750 gal/in * 0.233 VCB 8/16/00 + (12,500 gal)* 0.15] VCB 8/16/00

= 33,515 gal – [(3845 gal) + (1875 gal)] = 33,515 - 5720 = 27,795 gallons (27.8 Kgal)

SOLIDS VOLUME:

The upper waste surface level (163.8 inches) slopes gradually towards a cone shaped central depression with a diameter of 23 feet (assumed to be a right circular cone). The waste slopes down approximately 4 feet to a level of 116 inches. At this point the slope of the waste drops vertically approximately 61 inches to a level of 54.6 inches and forms a circular depression with a diameter of 13 feet (assumed to be a right circular cylinder). This level is 6 inches below the visible supernatant level surrounding the saltwell screen. The slope of waste from the tank sidewall to the first depression edge is small compared to the area of waste, so it is assumed flat for this calculation. The upper volume of the tank was calculated by finding the volume of the void space, created by the cone and cylinder, and subtracting it from the surface volume. The area of overlap between the cone and cylinder is added back to the total to correct for subtracting the volume out of both the cone and cylinder. The surface volume is then added to the lower and dish volumes to obtain the total volume as follows:

Volume (surface) = [Vol. of (163.8"–54.6") * 2750 gal/in] – Vol. (right circular cone & cylinder)

+ Vol. of overlap of cone and cylinder

Evaluation Prepared by JM Daeler for K Hull SLS Date 8/16/00

Evaluation Checked by VC Boyles Date 8/16/00

EVALUATION CALCULATIONS AND COMMENTS:

TANK: **241-U-103**

SOLIDS VOLUME (cont.):

= 300,300 gal–[(pi/3)(11.5 ft.)^2*(9.2 ft.)+(pi)(6.5ft)^2*(5.1ft)~~+~~(pi/3)(6.5ft)^2*(5.2ft)]*7.481 gal/ft^3

= 300,300 gallons – 9530 gallons – 5060 gallons + 1720 gallons = 287,430 gallons

Volume (lower) = [Vol. of (54.6" – 12)* 2750 gal/in] = 42.6" * 2750 gal/in = 117,150 gallons

Volume (Tot) = Vol. (surface) + Vol. (lower) + Vol. dish bottom (lower 12")

Volume (Tot) = 287,430 gals + 117,150 gals + 12,500 gals = 417,080 gallons = <u>417.1 Kgal</u>

Solids Volume remaining = Volume (tot) – Drainable Liquid Remaining (DLR)

= 417,080 gals – 33,515 = 383,565 = <u>383.6 Kgal</u>

FLOW DATA:

The final pump rate is found by data obtained from 0130 to 1130 on May 10, 2000. These data were taken after the a saltwell screen flush on May 8th and show a total of 25 gallons of waste were pumped over the time period of 720 minutes, while the pump ran in AUTOMATIC mode. The following equation shows the pumping rate for this final pump run:

Pump Rate = [25 gallons/720 minutes] = (<u>0.035 gpm</u>)

The in-flow rate of the saltwell screen was also analyzed. Readings for weight factor and specific gravity were recorded by temporary round sheet for the first 45 minutes after shutdown of the saltwell system. The refill of the saltwell screen, as reported by the saltwell system DTAM, began at a weight factor transmitter (WFT) level of 12.1 inches (8.6 inches adjusted for specific gravity) @ 0944 on April 27th. After 45 minutes, the (WFT) level reached 15.1 inches (10.8 inches adjusted for specific gravity). This shows a 2.2 inch rise inside the saltwell screen over 45 minutes. A typical 10 inch diameter saltwell screen will hold 0.34 gallons/inch. The following equation calculates the final in-flow rate:

In-Flow Rate = [((10.8 inches – 8.6 inches) * 0.34 gallons/inch)/45 minutes]

= 0.75 gallons/45 minutes = (<u>0.017 gpm</u>)

Evaluation Prepared by JM Daeler for K Hull SLS Date 8/16/00

Evaluation Checked by VC Boyles Date 8/16/00

Atlantic Richfield Hanford Company

Tank 104-U

60 Tons of Diatomatious Earth Added to Tank ≈ 3" of solids ≈ 7000 Gal.'s

This volume would not contain any drainable liquid. This would leave ≈ 7,600 gal. pumpable interstitial and ≈ 500 gal supernate - total 8,100 gallon. ~~This~~ It was deemed not economically practical by mgt~~ion~~ to go after this volume JWB 11-2-78

94-5000-084 (9-70)
U.S. GOVERNMENT PRINTING OFFICE 1975 698-972 REGION 10

Single-Shell Tank Interim Stabilization Evaluation Form.

TANK: **241-U-105**

(Jet Pumping only) Reason for stopping jet pumping:

[ ] Meets 0.05 gpm criteria, Date of Shutdown _____

[x] Major equipment failure, Date of Shutdown ____07/13/00_____

Tank Waste Surface Level Condition and Comments: _____ SEE DESCRIPTION PAGE 2 _____

Evaluation: (See continuation page for calculations and additional comments)

Photo/video review completed - Date of most recent photo/video _____07/27/00_____

[x] Tank history, temperature profile and intrusion reviews completed and no anomalies identified

Starting Liquid Level ___ 164.43" _____ Method ____ENRAF_____ Date ___12/11/99____
Final liquid level _____ 89.4" _____ Method ____DIP TUBES____ Date ___03/28/01_____
Total Net Pumped Volume ____87.5 Kgal_____
Capillary Height Used in Calculation ___0"____
Final Solids Volume _____309.0 Kgal_____
Final Average Flow rate _____0.23 gpm_____
Calculated Porosity _____0.203_____
Supernatant Volume Remaining ____ 0 gal ____
Drainable Interstitial Liquid _____44.0 Kgal_____
Drainable Liquid Remaining _____44.0 Kgal____
Pumpable Liquid Remaining ____ 39.7 Kgal_____

[x] Justification letter attached (Interim Stabilization Cognizant Engineer)

Disposition of Tank:

[x] Tank Interim Stabilized
[ ] Tank Not Interim Stabilized; Re-start Pumping

Evaluation prepared by SST Cognizant Engineer: Kevin J. [signature] Date 3/29/01

Evaluation checked by Process Engineer: V C Boyles Date 3/29/01

Interim Stabilization Cognizant Engineer: [signature] Date 3/29/2K1

APPROVED BY:

Manager, Interim Stabilization Engineering Tracy M. Norner Date 3/29/01

Manager, Process Engineering [signature] Date 3/29/01

Manager, SST Engineering W. E. Bryan Date 3/29/01

Single-Shell Tank Interim Stabilization Evaluation Form. (cont

EVALUATION CALCULATIONS AND COMMENTS:

TANK: **241-U-105**

The surface of 241-U-105 is a brown colored waste with irregular patches of white salt crystal. Approximately 15% of the waste surface is covered by the salt formations. The surface level slopes slightly from the tank sidewall down to the first of two depressions in the center of the tank. The first depression is cone shaped and estimated to be 22 feet in diameter based on the visible portion of the saltwell screen. A second depression, inside the first, is cylindrically shaped and has a diameter of approximately 10 feet. Both depressions are centered on the saltwell screen. The waste surface appears dry and shows signs of cracking due to saltwell pumping. Tank wastes in 241-U-105 have also shown considerable sensitivity to barometric changes. The ENRAF probe is located 5 feet from the tank sidewall and reads 137.4 inches. Liquid observation well (LOW) readings indicate an interstitial liquid level (ILL) of 97.2 inches. Dip tube readings are located at the tank center and report an adjusted liquid surface level of 89.4 inches. This level is based on elevation & fabrication drawings that show the dip tubes installed 4 inches above the tank bottom. There is no visible liquid within the tank, making the supernatant estimate 0 gallons. All levels are based off the tank centerline dished bottom. Calculations do not take into account any retained gas within the waste.

For the purposes of this evaluation, the dip tube readings will be used to determine the final quantities of drainable and pumpable liquid in tank 241-U-105. To calculate drainable interstitial liquid (DIL) using dip tubes, capillary height is defined as zero in the equation per RPP-5556, Rev. 0. This is due to there being no solid waste in the saltwell screen to retain liquid through capillary forces.

DATA

Final adjusted LOW Reading (03/28/01) = 97.224 inches ~ 97.2 inches

Final ENRAF Reading (03/28/01) = 137.35 inches ~ 137.4 inches

Dip Tube Reading (03/28/01) = 85.38 inches + 4 inches (distance off tank bottom)
= 89.38 inches ~ 89.4 inches

Initial Liquid Level from 4/06/00 (ENRAF and LOW divergence point) = 135.5 inches

Porosity =(Net waste pumped since 4/06/00)/(Init. liquid level– final LOW level)*2750 gal/in

Height of Sludge Layer (32 Kgal) above bottom = 19.1 inches @@

Tank Dished Bottom Volume (Lower 12" Height) = 12,500 gallons **

Supernatant Volume (07/25/00 In-Tank Video Estimate) = 0 gallons

D.I.L. = Drainable Interstitial Liquid ##
= {[(Saturated Solids Ht. – 12") – (0" Capillary Ht.)]* 2750 gal/in + 12,500 gal}* porosity

D.L.R. = Drainable Liquid Remaining **
= D.I.L. + supernatant liquid

P.L.R. = Pumpable Liquid Remaining **
= D.L.R. – [((18" Unpumpable Ht – 12")* 2750 gal/in + 12,500 gallons) * porosity]

**Reference HNF-2978, Rev. 2
##Reference RPP-5556, Rev. 0
@@Reference HNF-EP-0182-153

Evaluation Prepared by [signature] SJS Date 3/29/01

Evaluation Checked by V C Boyles Date 3/29/01

Single-Shell Tank Interim Stabilization Evaluation Form. (cont.)

EVALUATION CALCULATIONS AND COMMENTS:

TANK: **241-U-105**

POROSITY:

Porosity = Net waste pumped (since 4/06/00)/ [(Initial liquid level – final LOW level) *2750 gal/in]

= 21,331 gallons / [(135.5" – 97.2") * 2750 gal/in] = 20.3%

DIP TUBE BASIS:

(Note: The lower 19.1" (32,000 gallons) of the tank volume is sludge @ 15% porosity – Ref. HNF-2978)

DIL = [(89.4" – 19.1") * 2750 gal/in] * 0.203 + (32,000 gal * 0.15)

= [(193,325 * 0.203) + (32,000 * 0.15)] = 44,045 gallons (44.0 Kgal)

DLR = DIL + Supernatant = 44,045 gallons + 0 gallons = 44,045 gallons (44.0 Kgal)

PLR = DLR – [[(18" – 12") * 2750 gal/in + (12,500 gal)]* 0.15]

= 44,045 gal – [(29,000 gal) * 0.15] = 44,045 - 4350 = 39,695 gallons (39.7 Kgal)

SOLIDS VOLUME:

The upper waste surface level (137.4") slopes gradually towards a cone shaped central depression with a diameter of 22 feet (assumed to be the frustum of a cone). The waste slopes down approximately 2 feet, from the edge of the depression, to a level of 114 inches. At this point the slope of the waste drops vertically 2 feet to a level of 90 inches and forms a circular depression with a diameter of 10 feet (assumed to be a right circular cylinder). The slope of waste from the tank sidewall to the first depression edge is small compared to the area of waste, so it is assumed flat for this calculation. The upper volume of the tank was calculated by finding the volume of the void space, created by the cone frustum and cylinder, and subtracting it from the surface volume. The surface volume is then added to the lower and dish volumes to obtain the total volume as follows:

Volume (upper) = [Vol. of (137.4"–90.0") * 2750 gal/in] – Vol. (right circular cylinder & cone frustum)

(Where frustum volume is = H/3 (A1 + A2 + sqrt. (A1 * A2)) * 7.481 gal/ft^3)

= 130,350 gal –[(pi * 2'/3)*((11.0')^2 +(5.0')^2+ (121' * 25')^0.5)+ (pi)(5.0')^2*(2.0')]* 7.481 gal/ft^3

= 130,350 gallons – 3150 gallons – 1175 gallons = 126,025 gallons

Volume (lower) = [Vol. of (90.0" – 12)* 2750 gal/in] = 78.0" * 2750 gal/in = 214,500 gallons

Volume (Tot) = Vol. (surface) + Vol. (lower) + Vol. dish bottom (lower 12")

Volume (Tot) = 126,025 gals + 214,500 gals + 12,500 gals = 353,025 gallons = 353.0 Kgal

Evaluation Prepared by [signature] SES Date 3/29/01

Evaluation Checked by VC Boyles Date 3/29/01

Single-Shell Tank Interim Stabilization Evaluation Form. (cont.

EVALUATION CALCULATIONS AND COMMENTS:

TANK: **241-U-105**

SOLIDS VOLUME (cont.):

Solids Volume remaining = Volume (tot) – Drainable Liquid Remaining (DLR)

= 353,025 gals – 44,045 = 308,980 = 309.0 Kgal

FLOW DATA:

The trend of monthly pumping rates of 241-U-105 over the life of the pumping campaign reveals the following: (Months were pump/equipment failure impacted pump rate operation are noted with " * ").

Month	Hours	Mode	Net Waste (Kgal)	Pump Rate (gpm)
12/99	344	Bypass	26.5	1.28
1/00	518	Bypass	25.1	0.81
2/00	460	Auto	12.4	0.44
3/00	82	Auto	2.2	0.45*
4/00	368	Auto	5.7	0.26
5/00	386	Auto	8.0	0.35
6/00	489	Auto	6.6	0.22
7/00	42	Auto	1.1	0.43*

The final pump rate is found by data obtained from 2330 June 24th to 1925 June 25th, 2000 that show a total of 237 gallons of waste were pumped over the time period of 1165 minutes (19.4 hours), while the pump ran in AUTOMATIC mode. This time span was the last stable operating duration following the final screen flush on June 6th. The pump ran sporadically after the June 25th date until final shutdown of the system. The following equation shows the pumping rate for this final pump run:

Pump Rate = [237 gallons/1165 minutes] = (0.20 gpm)

The in-flow rate of the saltwell screen was also analyzed with a plot of the refill rate of the saltwell screen versus time. The refill of the saltwell screen, as reported by the saltwell system DTAM, began at a weight factor transmitter (WFT) level of 7.4 inches (5.3 inches adjusted for specific gravity) @ 1832 on July 7th. The refill rate increased exponentially until a point at 1856 on July 7th when the change in rate became steady. At this time, the DTAM reported the WFT level in the screen as 30.5 inches (21.8 inches adjusted). This point will be used for the final in-flow rate, as it is conservatively the largest average in-flow rate. A typical 10 inch diameter saltwell screen will hold 0.34 gallons/inch. The following equation calculates the final average in-flow rate:

In-Flow Rate = [((21.8 inches – 5.3 inches) * 0.34 gallons/inch)/24 minutes]

= 5.61 gallons/24 minutes = (0.23 gpm)

Both flow rate data points exceed the minimum stabilization flow rate of 0.05 gallons per minute. For calculation purposes, the in-flow rate will be used in the letter of justification for major equipment failure due to this point being the most conservative of the two flow rates.

Evaluation Prepared by [signature] SLS Date 3/29/01

Evaluation Checked by VC Boyles Date 3/29/01

Single-Shell Tank Interim Stabilization Evaluation Form.

TANK: **241-U-106**

(Jet Pumping only) Reason for stopping jet pumping:

[x] Meets 0.05 gpm criteria, Date of Shutdown _____12/29/00_____

[ ] Major equipment failure, Date of Shutdown _____

Tank Waste Surface Level Condition and Comments: _____ SEE DESCRIPTION PAGE 2 _____

Evaluation: (See continuation page for calculations and additional comments)

Photo/video review completed - Date of most recent photo/video _____02/11/01_____

[x] Tank history, temperature profile and intrusion reviews completed and no anomalies identified

Starting Liquid Level ___ 90.4" _____ Method ____ENRAF_____ Date ___08/24/00____
Final liquid level _____ 59.5" _____ Method ____DIP TUBES____ Date ___03/07/01____
Total Net Pumped Volume ____39.1 Kgal_____
Capillary Height Used in Calculation ___ 0"____
Final Solids Volume _____132.7 Kgal_____
Final Average Flow rate _____0.033 gpm_____
Calculated Porosity _____ N/A _____
Supernatant Volume Remaining __1.7 Kgal ____
Drainable Interstitial Liquid _____35.8 Kgal_____
Drainable Liquid Remaining _____37.5 Kgal____
Pumpable Liquid Remaining ____ 30.2 Kgal_____

[ ] Justification letter attached (Interim Stabilization Cognizant Engineer)

Disposition of Tank:

[x] Tank Interim Stabilized
[ ] Tank Not Interim Stabilized; Re-start Pumping

Evaluation prepared by SST Cognizant Engineer: K.J. Hull Date 3/9/01

Evaluation checked by Process Engineer: U.P. Boyles Date 3/9/01

Interim Stabilization Cognizant Engineer: S.C. Sweaney Date 3/9/2K1

APPROVED BY:

Manager, Interim Stabilization Engineering T.M. Horner Date 3/9/01

Manager, Process Engineering M.W. Kurl Date 3/9/01

Manager, SST or DST Engineering W.E. Bryan Date 3/9/01

Single-Shell Tank Interim Stabilization Evaluation Form. (cont

EVALUATION CALCULATIONS AND COMMENTS:

TANK: **241-U-106**

The surface of 241-U-106 is a dark brown/yellow colored waste that is covered with many stalagmite type crystals growing on the surface. The crystals cover approximately 75% of the waste surface. The waste surface is irregular, appears dry, and shows only minimal signs of cracking due to saltwell pumping. The surface level slopes 16.5 inches from the tank sidewall down to a supernatant pool in the center of the tank. The supernatant pool is estimated to be 13.3 feet in diameter based on the visible portion of the saltwell screen. The pool will be assumed to be in the shape of a cone for calculation purposes. This is based on previous in-tank videos that show a cone shaped depression in tanks with only a dry surface remaining. The pool is centered on the saltwell screen. The ENRAF probe is located 5 feet from the tank sidewall and reads 76.0 inches. Liquid observation well (LOW) readings indicate an average adjusted interstitial liquid level (ILL) of 73.0 inches. Dip tube readings are located at the tank center and report an adjusted liquid surface level of 59.5 inches. This level is based on elevation & fabrication drawings that show the dip tubes installed 4.5 inches above the tank bottom. All levels are based off the tank centerline dished bottom. Calculations do not take into account any retained gas within the waste.

For the purposes of this evaluation, the dip tube readings will be used to determine the final quantities of drainable and pumpable liquid in tank 241-U-106. To calculate drainable interstitial liquid (DIL) using dip tubes, capillary height is defined as zero in the equation per RPP-5556, Rev. 0. This is due to there being no solid waste in the saltwell screen to retain liquid through capillary forces.

DATA

Final LOW Reading (03/07/01) = 73.02 inches ~ 73.0 inches

Final ENRAF Reading (03/07/01) = 76.045 inches ~ 76.0 inches

Dip Tube Reading (03/07/01) = 55.03 inches + 4.5 inches (distance off tank bottom)
= 59.53 inches ~ 59.5 inches

Net Waste Pumped (since 08/24/00) = 39,124 gallons (per TO-505-106 data sheets)

Tank Waste Porosity = 25% **

Tank Dished Bottom Volume (Lower 12" Height) = 12,500 gallons **

Supernatant Volume (02/11/01 In-Tank Video Estimate) = 1700 gallons (1.7 Kgal)

D.I.L. = Drainable Interstitial Liquid ##
= {[(Saturated Solids Ht. – 12") – (0" Capillary Ht.)]* 2750 gal/in + 12,500 gal}* porosity

D.L.R. = Drainable Liquid Remaining **
= D.I.L. + supernatant liquid

P.L.R. = Pumpable Liquid Remaining **
= D.L.R. – [((18" Unpumpable Ht – 12")* 2750 gal/in + 12,500 gallons) * porosity]

**Reference HNF-2978, Rev. 1
##Reference RPP-5556, Rev. 0

Evaluation Prepared by [signature] SJS Date 3/9/01

Evaluation Checked by VC Boyles Date 3/9/01

Single-Shell Tank Interim Stabilization Evaluation Form. (cont

EVALUATION CALCULATIONS AND COMMENTS:

TANK: **241-U-106**

POROSITY:

Tank Waste Porosity could not be determined from pumping data due to insufficient LOW draw down levels vs. net pumping quantities. Therefore, a porosity of 25% will be used per HNF-2978.

DIP TUBE BASIS:

DIL = [(59.5" – 12") * 2750 gal/in + (12,500 gal)] * 0.25

= [(143,125 * 0.25) = 35,781 gallons (35.8 Kgal)

DLR = DIL + Supernatant = 35,781 gallons + 1700 gallons = 37,481 gallons (37.5 Kgal)

(Where supernatant is V_{cone} = (pi/3)* r^2 * h = (pi/3)* (6.67')^2 * (58.4"/12) * 7.5 gal/ft^3)

PLR = DLR – [[(18" – 12") * 2750 gal/in + (12,500 gal)]* 0.25]

= 37,481 gal – [(29,000 gal)*0.25] = 37,481 - 7250 = 30,231 gallons (30.2 Kgal)

SOLIDS VOLUME:

The upper waste surface level (76.0 inches) slopes gradually towards the edge of a supernatant pool centered on the saltwell screen. The pool has a diameter of 13.3 feet (assumed to be a right circular cone) with a liquid level of 59.5 inches (from Dip Tube readings). The slope of waste from the tank sidewall (75 foot diameter) to the central pool edge is 16.5 inches over 31 feet. The volume of the upper sloped surface is found by calculating the theoretical volume of waste between the ENRAF and Dip Tube readings and subtracting the volume of the depression formed by the sloping waste (assumed to be the frustum of a cone). Adding this volume to the lower and dish volumes calculates the total volume of the tank. The volume of drainable liquid remaining (DLR) was then subtracted from this total to obtain the total solids volume of 241-U-106.

Vol. (sloped surface) = [Volume of (76.0"– 59.5") * 2750 gal/in] – Volume (frustum of cone)

(Where frustum volume is = H/3 (A1 + A2 + sqrt. (A1 * A2)) * 7.5 gal/ft^3) =

(H *pi/3)[(1/4*(75')^2) +1/4*(13.3')^2 +(1/4(75')^2*1/4(13.3')^2)^0.5]* 7.5 gal/ft^3 =

1.375' *pi/3[1406.3 ft^2 + 44.2 ft^2 +249.4 ft^2] * 7.5 gal/ft^3 = 18,350 gallons

Vol. (sloped surface) = 45,375 gallons – 18,350 gallons = 27,025 gallons

Vol. (lower surface) = [Vol. of (59.5" – 12")* 2750 gal/in] = 47.5 * 2750 gal/in = 130,625 gallons

Vol. (dished bottom) = 12,500 gallons

Evaluation Prepared by [signature] SJS Date 3/9/01

Evaluation Checked by VC Boyles Date 3/9/01

Single-Shell Tank Interim Stabilization Evaluation Form. (cont.

EVALUATION CALCULATIONS AND COMMENTS:

TANK: **241-U-106**

SOLIDS VOLUME (cont):

Volume (Total) = 27,025 gals + 130,625 gals + 12,500 gals = 170,150 gallons = 170.2 Kgal

Solids Vol. Remaining = Volume (Total) – Drainable Liquid Remaining (DLR)

= 170,150 gallons – 37,481 = 132,669 = 132.7 Kgal

FLOW DATA:

Examination of the trend of monthly pumping rates of 241-U-106 over the life of the pumping campaign reveals the following:

Month	Hours	Mode	Net Waste (gal)	Pump Rate (gpm)
8/00	170	By-Pass	25,084	2.46
9/00	342	By-P/Auto	7,551	0.37
10/00	579	Auto	3,750	0.11
11/00	521	Auto	2,042	0.065
12/00	254	Auto	697	0.046

The final pump rate is found by data obtained from 0130 December 26th to 1130 December 26th, 2000 that show a total of 24 gallons of waste were pumped over the time period of 720 minutes (12.0 hours), while the pump ran in AUTOMATIC mode. This time period was the final continuous pumping for an entire shift. These data were taken before the final screen flush on December 27th, 2000. After this shutdown for flushing, the pump was restarted December 28th, 2000 and run until the pump failed on December 29th. The data from this day of pumping was discarded due to sporadic pumping rates and that only flush water was removed during the final pumping duration. The following equation shows the pumping rate for this final pump run:

Pump Rate = [24 gallons / 720 minutes] = (0.033 gpm)

Evaluation Prepared by [signature] SLS Date 3/9/01

Evaluation Checked by VC Boyles Date 3/9/01

Single-Shell Tank Interim Stabilization Evaluation Form

TANK: **241-U-107**

(Jet Pumping only) Reason for stopping jet pumping:

[x] Meets 0.05 gpm criteria, Date of Shutdown _____10/07/03_____

[ ] Major equipment failure, Date of Shutdown _____

Tank Waste Surface Level Condition and Comments: _____ SEE DESCRIPTION PAGE 2 _____

Evaluation: (See continuation page for calculations and additional comments)

Photo/video review completed - Date of most recent photo/video _____02/04/03_____

[x] Tank history, temperature profile and intrusion reviews completed and no anomalies identified

Starting Liquid Level ___ 157.1" _____ Method _____ENRAF_____ Date ___09/30/01___
Final liquid level _____ 48.5"_____ Method _____DIP TUBES_____ Date ___11/20/03___
Total Net Pumped Volume ____119.3 Kgal____
Capillary Height Used in Calculation ___0"____
Final Solids Volume _____294.3 Kgal_____
Final Average flow rate _____0.03 gpm____
Calculated Porosity _____0.297_____
Supernatant Volume Remaining ___0 Kgal ___
Drainable Interstitial Liquid _____31.6 Kgal____
Drainable Liquid Remaining ____31.6 Kgal____
Pumpable Liquid Remaining ____24.9 Kgal____

[ ] Justification letter attached (Interim Stabilization System Engineer):

Disposition of Tank:

[x] Tank Interim Stabilized
[ ] Tank Not Interim Stabilized; Re-start Pumping

Evaluation prepared by Retrieval/Closure System Engineer: SL Swaney _____ Date 12/11/2/03

Closure Projects Engineering Support Process Engineer: _____ Date 12/11/03

APPROVED BY:

Manager, Retrieval/Closure System Engineering MJ SUTEY _____ Date 12/11/03

Manager, Closure Projects Engineering Support DG Baide for WTT _____ Date 12/16/03

Single-Shell Tank Interim Stabilization Evaluation Form (cont.)

EVALUATION CALCULATIONS AND COMMENTS:

TANK: **241-U-107**

OBJECTIVE/PURPOSE:

This Single-Shell Tank Interim Stabilization Evaluation provides the data and supporting calculations involved in declaring single-shell waste storage tank 241-U-107 interim stabilized. The criteria to declare 100-series jet-pumped single-shell waste storage tanks to be interim stabilized are: 1) the tank contains less than 50,000 gallons of drainable interstitial liquid (DIL), 2) the tank contains less than 5,000 gallons of supernatant, and 3) the measured maximum pump-out or in-flow rate is less than 0.05 gallons per minute. In the event of major equipment failure, Criteria 3 may be waived with a letter of justification and management approval.

ANALYSIS METHOD:

The analysis method used for this evaluation relied upon the criteria and equations established in HNF-2978, Rev. 5, *Updated Pumpable Liquid Volume Estimates and Jet Pump Durations for Interim Stabilization of Remaining Single-Shell Tanks*. Calculations presented will utilize the LOW basis method. See the **Calculations** section for equation definitions.

This evaluation follows the applicable guidelines of the *Engineering Calculations* procedure, TFC-ENG-DESIGN-C-10, Rev. A-1, and the technical basis and formatting requirements of *Single-Shell Tank Interim Stabilization Evaluation* procedure, TFC-ENG-CHEM-P-15, Rev. A-1. When complete, this evaluation will be formally released as part of a direct revision to HNF-SD-RE-TI-178, *Single-Shell Tank Leak Stabilization Record*.

TANK WASTE DESCRIPTION:

The following description was obtained by in-tank video taken 02/04/03 through riser #9. The waste of 241-U-107 is a smooth, brownish saltcake waste with irregular patches of white salt crystals that were created as the waste was dried out by saltwell pumping. Saltwell pumping yielded 119,275 gallons of net waste from 241-U-107, while using 8,064 gallons of water for pump flushes and 54,994 gallons of water for dilution. Additionally, 10,601 gallons of water were added during testing of a saltcake dissolution (retrieval) process which yielded another 4,251 gallons of net waste from tank 241-U-107. The total volume of net waste removed from the tank was 123,476 gallons, however, only the volumes attributed to saltwell pumping will be used for interim stabilization reporting purposes. The waste surface appears to be dry and shows no standing water upon the waste surface. There are several depressions on the waste surface, near the saltcake dissolution equipment, where the spray nozzle testing occurred. The "near wall" test depression appears to be approximately 6 feet across and 4 feet deep and contacts the tank sidewall. The "shadowing" test depression is approximately 4 feet across and 2 feet deep centered on the tank thermocouple tree. The "near saltwell test" depression is approximately 20 feet from the nozzle and is approximately 8 feet in diameter. The ENRAF plummet is located 5 feet from the tank wall (32.5 feet from the tank center) and reads 116.0 inches. The waste surface gradually slopes from one side of the tank to the other, but will be considered flat for the purposes of this evaluation.

Currently, liquid observation well (LOW) readings indicate an ILL of 75.9 inches. ENRAF readings indicate the surface level has dropped 0.1 inches to 115.9 inches. Dip tube readings are obtained by work package WS-03-0299. The current (11/20/03) dip tube level adjusted for the dip tube offset of 22.0 inches and assuming a zero inch capillary height, is 48.5 inches. All reported levels are based on the centerline of the tank's dished bottom. Calculations do not take into account any retained gas within the waste.

Evaluation Prepared by _____ Date 12/11/2003

Evaluation Checked by _____ Date 12/11/03

Single-Shell Tank Interim Stabilization Evaluation Form (cont.)

EVALUATION CALCULATIONS AND COMMENTS:

TANK: **241-U-107**

TANK WASTE DESCRIPTION (cont.):

It should be noted that the video of tank 241-U-107 was obtained approximately 20 months prior to declaring the tank stabilized. Review of surface and ILL levels at the time of the video show the dip tube and ENRAF levels to be 82" and 117.3", respectively. Since the video revealed no supernatant with an ILL greater than the current ILL, the video determination of zero supernatant liquid is valid.

INPUT DATA & ASSUMPTIONS

Initial Liquid Level at Start of Pumping (ENRAF – 09/30/01) = 157.105 inches ~ 157.1 inches

Final ENRAF Reading (12/03/03) = 115.91 inches ~ 115.9 inches

Final Liquid Observation Well (LOW) Reading (12/02/03) = 75.936 inches ~ 75.9 inches

Final Dip Tube Reading from WS-03-0299 (11/20/03) = 26.51 inches ~ 26.5 inches

Dip Tube Offset (Distance of lowest dip tube leg from tank bottom) = 22.0 inches

Final Adjusted Dip Tube Level = 26.51 inches + 22.0 inches = 48.51 inches ~ 48.5 inches

Divergence point = LOW & ENRAF Levels vs. time diverge (supernatant liquid is exhausted)

Divergence point = (based on LOW Level from 08/05/02) = 133.104 inches ~ 133.1 inches

Net Waste Pumped since divergence (use week end 09/14/03 from \\AP012\DPU) = 46,689 gallons

Capillary Height (based on Dip Tube and saltcake bases) = 0 inches **

Retrieved Waste from Saltcake Dissolution process (from \\AP012\DPU) = 4,250 gallons

Sludge Volume = 15,000 gallons *

Height of Sludge Layer (15 Kgal) above bottom ~ 12.9 inches *

Tank Dished Bottom Volume (Lower 12" Height) = 12,500 gallons *

Unpumpable Liquid Height Constant = 18 inches *

Assumed Sludge Porosity = 17% *

For 100-series (75' dia.) tanks (500, 750, and 1000K gallon SSTs), 1 inch equals 2750 gallons when above the dish bottom. *

Evaluation Prepared by _____ Date 12/11/2003

Evaluation Checked by _____ Date 12/11/03

Single-Shell Tank Interim Stabilization Evaluation Form (cont.)

EVALUATION CALCULATIONS AND COMMENTS:

TANK: **241-U-107**

EQUATIONS

Drainable Porosity (Saltcake) = Net waste pumped (since 08/05/02)/[(Divergence point – final LOW level)*2750 gal/in]

D.I.L. = Drainable Interstitial Liquid *
= {[Final Adj. Dip Tube Level – Sludge Height – Capillary Height] * 2750 gal/in} * Drainable porosity (saltcake) + (Sludge Volume) * assumed sludge porosity

D.L.R. = Drainable Liquid Remaining *
= D.I.L. + supernatant volume

P.L.R. = Pumpable Liquid Remaining *
= D.L.R. – [(Unpumpable Ht – 12.9") * Drainable porosity (saltcake) * 2750 gal/in + (Sludge Volume) * assumed sludge porosity]

*Reference HNF-2978, Rev. 5
**Reference RPP-5556, Rev. 0

RESULTS/CALCULATIONS

POROSITY:

Drainable Porosity (Saltcake) = Net waste pumped (since 08/05/02)/ [(Divergence point – final LOW level)*2750 gal/in]

= (46,689 gallons) / [(133.1" – 75.9") * 2750 gal/in] *100% = 29.7%

DIP TUBE BASIS:

DIL = [(48.5" – 12.9" – 0") * 2750 gal/in] * 0.297 + (15,000 gal * 0.17)

= [97,900 * 0.297 + 15,000 gal * 0.17] = 29,076 + 2,550 = 31,626 gallons (31.6 Kgal)

DLR = DIL + Supernatant = 31,626 gallons + 0 gallons = 31,626 gallons (31.6 Kgal)

PLR = DLR – [(18" – 12.9") * 0.297 * 2750 gal/in + 15,000 gal * 0.17]

= 31,626 gal – [4,165 gal + 2,550 gal] = 31,626 gal – 6,715 gal = 24,911 gallons (24.9 Kgal)

Evaluation Prepared by _____ Date 12/4/2003

Evaluation Checked by _____ Date 12/11/03

Single-Shell Tank Interim Stabilization Evaluation Form (cont.)

EVALUATION CALCULATIONS AND COMMENTS:

TANK: **241-U-107**

RESULTS/CALCULATIONS (cont.)

SOLIDS VOLUME:

The following description was obtained by review of the in-tank video taken 02/04/03. The ENRAF level from 02/04/03 was not available due to the saltcake dissolution process. The saltcake dissolution process required the ENRAF to be reeled in (out of service) so no water would impact and damage the plummet line. However, by interpolating ENRAF levels prior to and after saltcake dissolution, a level of 116.0 inches was determined and will be used for the solids volume estimate. All estimates regarding waste dimensions were obtained by comparison with known dimensions of installed in-tank equipment and drawing D-2, Rev. 6, *Half Section at Centerline of 75 ft. Tank* from Project 9536, PO # 1451-1/2. The surface of the solid waste is assumed smooth and flat for the majority of the tank except for 3 surface depressions due to saltcake dissolution process testing. The total volume of these depressions is difficult to ascertain as the total size and depth is not clearly visible. For the purposes of the solids volume estimating, the net waste removed attributed to the saltcake dissolution process (4,250 gallons) is subtracted from the total volume estimate to account for the 3 depressions.

Per HNF-2978, Rev. 5 and Best Basis Inventory (BBI) located in the TWINS database; the sludge volume of 241-U-107 is 15 Kgal. For reporting purposes, the total quantity of solids in the tank will be calculated and the sludge volume will be subtracted from this total. This volume difference will then be the reported quantity of saltcake in 241-U-107. For this calculation the saltcake and sludge solids volumes include the interstitial liquid but do not include any supernatant liquid.

For the purpose of this evaluation, the solids volume will include an evaluation of the upper surface, subtracting the retrieved dissolution depressions (not pictured); lower volume; and the dish volume. See SOLIDS CALCULATION FIGURE. These volumes are then added together to obtain the total volume as follows:

SOLIDS CALCULATION FIGURE

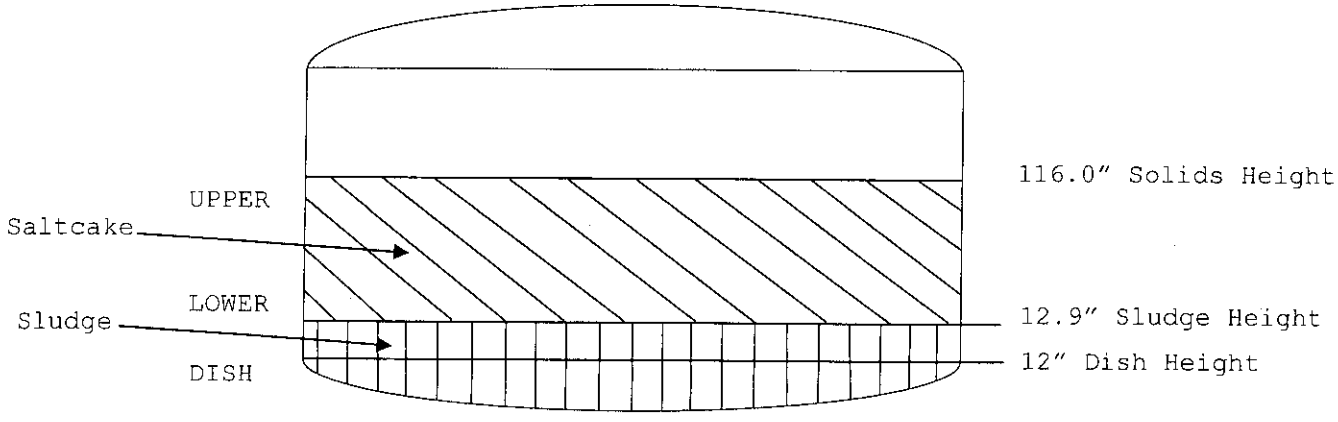

Evaluation Prepared by _____ Date 12/4/2003

Evaluation Checked by _____ Date 12/11/03

Single-Shell Tank Interim Stabilization Evaluation Form (cont.)

EVALUATION CALCULATIONS AND COMMENTS:

TANK: **241-U-107**

RESULTS/CALCULATIONS (cont.)

SOLIDS VOLUME (cont):

Volume (Upper) = [Vol. of (116.0"–12.9") * 2750 gal/in] – Vol. (saltcake dissolution)

Volume (Upper) = 283,525 gal – 4,250 gal = 279,275 gallons

Volume (Lower) = (12.9" – 12") * 2750 gal/in = 2,475 gallons

Volume (Dish) = 12,500 gallons

Volume (Tot) gallons = 279,275 + 2,475 + 12,500 = 294,250 gallons = 294.3 Kgal

Solids Volume Remaining = Volume (Tot) – Supernatant Liquid

= 294,250 gallons - 0 gallons = 294,250 gallons = 294.3 Kgal

Saltcake Volume remaining = Solids Volume Remaining – Sludge Volume

= 294,250 gallons – 15,000 gallons = 279,250 gallons = 279.3 Kgal

FLOW DATA:

Due to a premature failure of the flow measurement instrumentation, the final pumping rate data is not available. Consequently the determination that the flow rate criterion has been met will be performed by an evaluation of the in-flow rate of waste into the salt well screen. The in-flow rate can be calculated using dip tube equipment measurements. Since the sustained in-flow rate or drainage rate is equal to the maximum sustainable pump out rate, and the sustained drainage rate was less than 0.05 gpm, the in-flow rate of the saltwell dip tubes will be presented in this evaluation as follows:

The in-flow rate of the saltwell screen was analyzed as the refill rate of the saltwell screen versus time. The refill of the saltwell screen, as reported by the saltwell system DTAM, began after the pump shutdown at a weight factor transmitter (WFT) level of 16.21 inches (13.5 inches adjusted for a 1.2 specific gravity) @ 1516 on September 03, 2003. The refill rate was monitored until 1540 on September 03, 2003. At this time, the DTAM reported the WFT level in the screen as 18.54 inches (15.5 inches adjusted). This point is considered valid as the pump was operating in AUTO mode prior to shutdown and the screen was completely drained prior to refill occurring. This point will be used for the final in-flow rate, as it is conservatively the largest average in-flow rate. A typical 10-inch diameter saltwell screen will hold 0.34 gallons/inch. The following equation calculates the final average in-flow rate:

In-Flow Rate = [((15.5 inches – 13.5 inches) * 0.34 gallons/inch)/24 minutes]

= 0.68 gallons/24 minutes = 0.028 gpm (0.03 gpm)

Evaluation Prepared by _____ Date 12/4/2003

Evaluation Checked by _____ Date 12/11/03

Single-Shell Tank Interim Stabilization Evaluation Form (cont.)

EVALUATION CALCULATIONS AND COMMENTS:

TANK: **241-U-107**

SOFTWARE: None.

REFERENCES:

TO-505-107, Rev. A-0 through D-6, *Perform 241-U-107 Saltwell Pumping.*

Drawing D-2, Rev. 6, *Half Section at Centerline of 75 ft. Tank* from Project 9536, PO # 1451-1/2

HNF-2978, Rev. 5, *Updated Pumpable Liquid Volume Estimates and Jet Pump Durations for Interim Stabilization of Remaining Single-Shell Tanks.*

TFC-ENG-DESIGN-C-10, Rev. A-1, *Engineering Calculations.*

TFC-ENG-CHEM-P-15, Rev. A-1, *Single-Shell Tank Interim Stabilization Evaluation* procedure.

HNF-SD-RE-TI-178, Rev. 8, *Single-Shell Tank Leak Stabilization Record.*

WS-03-0299, *241-G Weight Factor and Specific Gravity Readings*

Tank Waste Information System (TWINS) 2003, *queried December 3*, 2003, [posted Tank Integrity Reports], Hanford intranet at http://twinswhse.pnl.gov/

Pumpchrts_PE.xls, Excel log of saltwell pumping history from server \\ap012\dpu\pumpchartsPE.

CONCLUSIONS/RECOMMENDATIONS:

241-U-107 has met the applicable criteria for declaration of interim stabilization. See Page 1 for summary and final tank disposition and approvals.

ATTACHMENTS:

All record attachments, raw data, and calculations for this evaluation, as well as other information may be found in the tank history file maintained by Interim Stabilization Engineering, per the requirements TFC-ENG-CHEM-P-15, section 4.2.19.

Evaluation Prepared by _____ Date 12/4/2003

Evaluation Checked by _____ Date 12/11/03

Single-Shell Tank Interim Stabilization Evaluation Form

TANK: **241-U-108**

(Jet Pumping only) Reason for stopping jet pumping:

[ ] Meets 0.05 gpm criteria, Date of Shutdown _____

[X] Major equipment failure, Date of Shutdown 03/18/04

Tank Waste Surface Level Condition and Comments: SEE DESCRIPTION PAGE 2

Evaluation: (See continuation page for calculations and additional comments)

Photo/video review completed - Date of most recent photo/video 03/08/04

[x] Tank history, temperature profile and intrusion reviews completed and no anomalies identified

Starting Liquid Level 179.2" Method ENRAF Date 12/02/01
Final liquid level 80.6" Method DIP TUBES Date 07/22/04
Total Net Pumped Volume 112.5 Kgal
Capillary Height Used in Calculation 0"
Final Solids Volume 433.6 Kgal
Final Average flow rate 0.1 gpm
Porosity 0.17 & 0.24 (assumed)
Supernatant Volume Remaining 0 Kgal
Drainable Interstitial Liquid 45.9 Kgal
Drainable Liquid Remaining 45.9 Kgal
Pumpable Liquid Remaining 40.8 Kgal

[x] Justification letter attached (Interim Stabilization System Engineer): **7G320-04-MJS.025**

Disposition of Tank:

[x] Tank Interim Stabilized
[ ] Tank Not Interim Stabilized; Re-start Pumping

Evaluation prepared by Retrieval/Closure System Engineer: SC Swaney Date 8/16/2004

Closure Projects Engineering Support Process Engineer: L.M. Sasaki L.M. Sasaki Date 8/16/04

APPROVED BY:

Manager, Retrieval/Closure System Engineering MJ Sutey Date 8/16/04

Manager, Closure Projects Engineering Support W.J. Thompson Date 8/16/04

Single-Shell Tank Interim Stabilization Evaluation Form (cont.)

EVALUATION CALCULATIONS AND COMMENTS:

TANK: **241-U-108**

OBJECTIVE/PURPOSE:

This Single-Shell Tank Interim Stabilization Evaluation provides the data and supporting calculations involved in declaring single-shell waste storage tank 241-U-108 interim stabilized. The criteria to declare 100-series jet-pumped single-shell waste storage tanks to be interim stabilized are: 1) the tank contains less than 50,000 gallons of drainable interstitial liquid (DIL), 2) the tank contains less than 5,000 gallons of supernatant, and 3) the measured maximum pump-out or in-flow rate is less than 0.05 gallons per minute. In the event of major equipment failure, Criteria 3 may be waived with a letter of justification and management approval.

ANALYSIS METHOD:

The analysis method used for this evaluation relied upon the criteria and equations established in HNF-2978, Rev. 5, *Updated Pumpable Liquid Volume Estimates and Jet Pump Durations for Interim Stabilization of Remaining Single-Shell Tanks*. Calculations presented will utilize the dip tube basis method. See the **Calculations** section for equation definitions.

This evaluation follows the applicable guidelines of the *Engineering Calculations* procedure, TFC-ENG-DESIGN-C-10, Rev. A-5, and the technical basis and formatting requirements of *Single-Shell Tank Interim Stabilization Evaluation* procedure, TFC-ENG-CHEM-P-15, Rev. A-1. When complete, this evaluation will be formally released as part of a direct revision to HNF-SD-RE-TI-178, *Single-Shell Tank Leak Stabilization Record*.

TANK WASTE DESCRIPTION:

Per Interoffice Memo 7G330-LMS-04-001, saltwell pumping yielded 112,513 gallons of net waste from 241-U-108, while using 9,228 gallons of water for pump flushes and 53,496 gallons of water for dilution.

The following description was obtained by in-tank video taken 03/08/04. The waste of 241-U-108 is a smooth, brownish saltcake waste with irregular patches of white salt crystals that were created as the waste was dried out by saltwell pumping. The waste surface appears to be dry with evidence of cracking and shows no standing water upon the waste surface. There is a large cavity around the saltwell screen with an approximate diameter of 15 feet. The ENRAF plummet is located 5 feet from the tank wall (32.5 feet from the tank center) and reads 154.0 inches (from manual reading taken on 03/01/04). It is visible on the video and is in an approximate 1 foot deep depression. Therefore, 166 inches will be used as the waste surface level and will be considered flat for the purposes of this evaluation.

Currently, liquid observation well (LOW) readings indicate an ILL of 117.2 inches. Dip tube readings are obtained by work package WS-04-0568 and through the saltwell Operator Control System (OCS). The current (7/22/04) dip tube level adjusted for the dip tube offset of 2.5 inches and assuming a zero inch capillary height, is 80.59 inches. The dip tube level is a direct reading and not affected by variations in porosity and capillary attractions so it will be used as the liquid level in this evaluation. All reported levels are based on the centerline of the tank's dished bottom. Calculations do not take into account any retained gas within the waste.

Evaluation Prepared by _____ Date 8/16/2004

Evaluation Checked by L.M. Sasaki L M Sasaki Date 8/16/04

Single-Shell Tank Interim Stabilization Evaluation Form (cont.)

EVALUATION CALCULATIONS AND COMMENTS:

TANK: **241-U-108**

INPUT DATA & ASSUMPTIONS

Initial Liquid Level at Start of Pumping (ENRAF – 12/02/01) = 179.185 inches ~ 179.2 inches

Final ENRAF (Manual) Reading (04/07/04) = 154.17 inches

Final Liquid Observation Well (LOW) Reading (08/04/04) = 117.192 inches ~ 117.2 inches

Final Dip Tube Reading from WS-04-0568 & OCS (07/22/04) = 78.09 inches ~ 78.1 inches

Dip Tube Offset (Distance of lowest dip tube leg from tank bottom) = 2.5 inches

Final Adjusted Dip Tube Level = 78.1 inches + 2.5 inches = 80.6 inches ~ 80.6 inches

Divergence point = LOW & ENRAF Levels vs. time diverge (supernatant liquid is exhausted)

Divergence point = (based on LOW Level from 10/31/02) = 151.2 inches ~ 151.2 inches

Net Waste Pumped since divergence (10/31/02 thru 12/16/03 from \\AP012\DPU) = 74,023 gallons

Capillary Height (based on Dip Tube and saltcake bases) = 0 inches **

Sludge Volume = (110 KL) 29,059 gallons ****

Height of Sludge Layer (29.1 Kgal) above bottom ~ 18.6 inches***

Tank Dished Bottom Volume (Lower 12" Height) = 13,388 gallons ***

Unpumpable Liquid Height Constant = 18 inches *

Assumed Salt Cake Porosity = 24% *

Assumed Sludge Porosity = 17% *

For 100-series (75' dia.) tanks (500, 750, and 1000K gallon SSTs), 1 inch equals 2750 gallons when above the dish bottom. *

*Reference HNF-2978, Rev. 5
**Reference RPP-5556, Rev. 0
***Reference RPP-13019, Rev. 0
****Twins Database query 08/09/04

Evaluation Prepared by _____ Date 8/16/2004

Evaluation Checked by _____ Date 8/16/04

Single-Shell Tank Interim Stabilization Evaluation Form (cont.)

EVALUATION CALCULATIONS AND COMMENTS:

TANK: **241-U-108**

EQUATIONS

Drainable Porosity (Saltcake) = Net waste pumped (since 10/31/02)/ [(Divergence point – final LOW level)*2750 gal/in]

D.I.L. = Drainable Interstitial Liquid *
= {[Final Adj. Dip Tube Level – Sludge Height – Capillary Height] * 2750 gal/in} * Drainable porosity (saltcake) + (Sludge Volume) * assumed sludge porosity

D.L.R. = Drainable Liquid Remaining *
= D.I.L. + supernatant volume

P.L.R. = Pumpable Liquid Remaining *
= D.L.R. – [((Unpump. Ht – 12.0") * 2750 gal/in + Dish Vol.) * assumed sludge porosity]

*Reference HNF-2978, Rev. 5

RESULTS/CALCULATIONS

POROSITY:

Drainable Porosity (Saltcake) = Net waste pumped (since 10/31/02)/ [(Divergence point – final LOW level) * 2750 gal/in]

= (74,023 gallons) / [(151.2" – 117.2") * 2750 gal/in] * 100% = 79.2%

NOTE: This is not a credible number for saltcake porosity; therefore the default value of 24% will be used to calculate DIL for the salt cake regions of 241-U-108.

DIP TUBE BASIS (DLR):

DIL = [(80.6" – 18.6" – 0") * 2750 gal/in] * 0.24 + (29,059 gal * 0.17)

= [170,500 * 0.24 + 29,059 gal * 0.17] = 40,920 + 4,940 = 45,860 gallons (45.9 Kgal)

DLR = DIL + Supernatant = 45,860 gallons + 0 gallons = 45,860 gallons (45.9 Kgal)

PLR = DLR – [((18.0" – 12.0") * 2750 gal/in + 13,388 gal) * 0.17]

= 45,860 gal – 5,081 gal = 40,779 gallons (40.8 Kgal)

Evaluation Prepared by _____ Date 8/16/2004

Evaluation Checked by L M Sasaki Date 8/16/04

Single-Shell Tank Interim Stabilization Evaluation Form (cont.)

EVALUATION CALCULATIONS AND COMMENTS:

TANK: **241-U-108**

RESULTS/CALCULATIONS (cont.)

SOLIDS VOLUME:

The following description was obtained by review of the in-tank video taken 03/08/04. The manual ENRAF level from 03/01/04 (closest reading to the video) was 154.0 inches. The video revealed the plummet to be within a 1 foot depression, therefore 166 inches will be used for the solids volume estimate. All estimates regarding waste dimensions were obtained by comparison with known dimensions of installed in-tank equipment and drawing D-2, Rev. 6, *Half Section at Centerline of 75 ft. Tank* from Project 9536, PO # 1451-1/2. The surface of the solid waste appears to be flat with black, dry, and rough characteristics (assumed smooth and flat for the majority of the tank). There is a cavity about 15 feet in diameter centered at the salt well screen. Since the entire cavity is not visible, the interior shape will be assumed to be a right circular cone with a base of 15 feet. The cone is assumed to slope at a 45° angle toward the depression center for a total drop of 7.5 feet or 90 inches. Supernatant volume is zero gallons.

Per HNF-2978, Rev. 5 and Best Basis Inventory (BBI) located in the TWINS database; the sludge volume of 241-U-108 is 29.1 Kgal (18.6"). For reporting purposes, the total quantity of solids in the tank will be calculated and the sludge volume will be subtracted from this total. This volume difference will then be the reported quantity of saltcake in 241-U-108. For this calculation the saltcake and sludge solids volumes include the interstitial liquid but do not include any supernatant liquid.

The saltwell screen is positioned in the center of the tank. For the purpose of this evaluation, the solids volume will include an evaluation of the tank upper surface volume (minus the conical shaped depression) and the dish volume. See SOLIDS CALCULATION FIGURE. These volumes are then added together to obtain the total volume as follows:

SOLIDS CALCULATION FIGURE (not to scale)

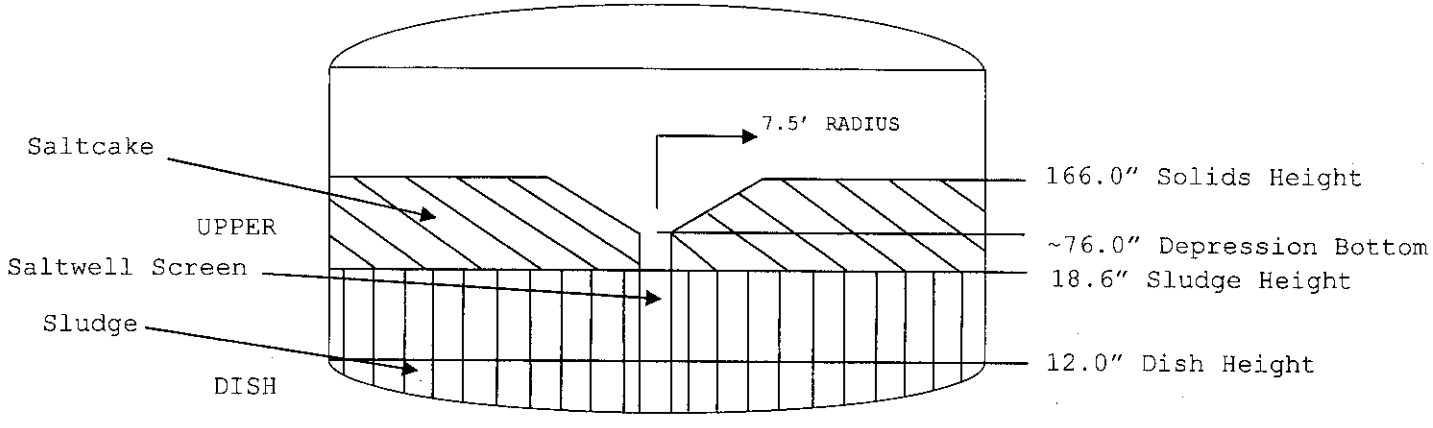

Volume = [Vol. (166.0"–12.0")* 2750 gal/in + Vol. of 12.0" (Dish Volume)] – Vol. (right circ. cone)

Evaluation Prepared by [signature] Date 8/16/2004

Evaluation Checked by L. M. Sasaki Date 8/16/04

Single-Shell Tank Interim Stabilization Evaluation Form (cont.)

EVALUATION CALCULATIONS AND COMMENTS:

TANK: **241-U-108**

RESULTS/CALCULATIONS (cont.)

SOLIDS VOLUME (cont):

(Where the right circular cone volume is = (pi * H/3 * r^2) * 7.481 gal/ft^3

Volume (Upper) = [Vol. of (166.0"–12.0") * 2750 gal/in]) = 423,500 gallons

Volume (cone) = pi(r)^2 H/3 *7.481 gal/ft^3 = pi (7.5)^2 * (166.0"– 76.0")/12)/3* 7.481= 3,305 gallons

Volume (Upper) = 423,500 gallons - 3,305 gallons = 420,195 gallons

Volume (Dish) = 13,388 gallons

Volume (Tot) gallons = 420,195 gallons + 13,388 gallons = 433,583 gallons = 433.6 Kgal

FLOW DATA:

Although the pumping rate had approached 0.05 gpm several times during the pumping history, it did not meet the interim stabilization criteria. When pumping was stopped on December 16, 2003, the pumping rate was 0.1 gpm. The pumping rate was apparently limited by restrictions in the transfer line. Subsequent efforts to clear the transfer line using a caustic solvent were not successful. It was determined that the transfer line was fully blocked.

The final pump flow rate is found by data obtained from operating procedure TO-505-108, Rev. C-10 from 2000 December 14, 2003 to 2000 December 15, 2003. On that day, 137 gallons of net waste was transferred during 24 hours (1440 minutes) of pumping

Pumping Rate = gallons/minutes = 137gallons / 1440minutes = 0.095 gpm (0.10 gpm)

The flow rate exceeds the minimum stabilization flow rate of 0.05 gallons per minute. The flow rate of 0.10 gallons per minute will be used in the letter of justification for major equipment failure to calculate expected pumping durations and water usage if pumping of 241-U-108 is restarted.

SOFTWARE: None.

Evaluation Prepared by _____ Date 8/16/2004

Evaluation Checked by L. M. Sasaki Date 8/16/04

Single-Shell Tank Interim Stabilization Evaluation Form (cont.)

EVALUATION CALCULATIONS AND COMMENTS:

TANK: **241-U-108**

REFERENCES:

TO-505-108, Rev. A-0 through C-10, *Perform 241-U-108 Saltwell Pumping.*

Drawing D-2, Rev. 6, *Half Section at Centerline of 75 ft. Tank* from Project 9536, PO # 1451-1/2

HNF-2978, Rev. 5, *Updated Pumpable Liquid Volume Estimates and Jet Pump Durations for Interim Stabilization of Remaining Single-Shell Tanks.*

RPP-5556, Rev. 0, *Updated Drainable Interstitial Liquid Volume Estimates for 119 Single-Shell Tanks Declared Stabilized.*

RPP-13019, Rev. 0, *Determination of Hanford Tank Waste Volumes.*

HNF-SD-RE-TI-178, Rev. 8, *Single-Shell Tank Leak Stabilization Record.*

TFC-ENG-DESIGN-C-10, REV A-5, *Engineering Calculations.*

TFC-ENG-CHEM-P-15, Rev A-1, *Single Shell Tank Interim Stabilization Evaluation.*

WS-04-0568, *241-G Weight Factor and Specific Gravity Readings.*

7G330-LMS-04-001, *December 2003 Saltwell Pumping Volume.*

7G320-04-MJS.025, *Justification for Declaring 241-U-108 Interim Stabilized, Due to Major Equipment Failure.*

Tank Waste Information System (TWINS) 2004, *queried August 9*, 2004, [Best Basis Inventory], Hanford intranet at http://twinswhse.pnl.gov/

Pumpchrts_PE.xls, Excel log of saltwell pumping history from server \\ap012\dpu\pumpchartsPE.

CONCLUSIONS/RECOMMENDATIONS:

241-U-108 has met the applicable criteria for declaration of interim stabilization under the provisions for major equipment failure, due to the blockage of the transfer line. See Page 1 for summary and final tank disposition/approvals and letter 7G320-04-MJS.025 "Justification for declaring 241-U-108 interim stabilized, due to major equipment failure."

ATTACHMENTS:

All record attachments, raw data, and calculations for this evaluation, as well as other information may be found in the tank history file maintained by Interim Stabilization Engineering, per the requirements TFC-ENG-CHEM-P-15, section 4.2.19.

Evaluation Prepared by _____ Date 8/16/2K4

Evaluation Checked by _____ Date 8/16/04

7G320-04-mjs.025

From: Retrieval/Closure System Engineering
Phone: 373-2408 S7-24
Date: August 16, 2004
Subject: JUSTIFICATION FOR DECLARING 241-U-108 INTERIM STABILIZED, DUE TO MAJOR EQUIPMENT FAILURE

To: T.L. Hissong S7-83

CC:				
	W.B. Barton	S7-70	M.R. Koch	S7-70
	J.W. Cammann	S7-83	D.J. Saueressig	S7-20
	R.A. Dodd	S7-83	S.L. Swaney	S7-24
	J.N. Doeler	S7-24	D.T. Vladimiroff	S7-20
	R.A. Flores	S7-20	W.T. Thompson	S7-70
	K.C. Dorwick	S7-83	R.P. Tucker	S7-83
	T.M. Horner	S5-08	MJS/LB	

Saltwell pumping of Tank 241-U-108 began on 12/03/01 and continued until 12/16/03 when the saltwell jet pump was shutdown due to low flow rates. Subsequent investigation found that the transfer line from U-Farm to SY-Farm (SN-216/282) was substantially plugged and unable to support saltwell pumping. Caustic sodium solution was introduced into the line in an attempt to dissolve the blockage. This method had been employed successfully previously. Several types of pumps including centrifugal and positive displacement were used in an attempt to clear the line but were unsuccessful. A number of options to remove or bypass the obstruction were evaluated against the estimated radiation exposure, cost, and probability of success. It was concluded that installation of a new transfer line was the preferred option. Further review of this option considering ALARA goals, schedule impacts, and project cost compared to the volume of remaining pumpable waste, determined this was not justified. The line has been isolated and marked as failed. 241-U-108 was subsequently declared stabilized due to major equipment failure.

A net volume of 112,513 gallons of liquid waste was transferred to Double-Shell tank (DST) 241-SY-102 before the failure occurred. Waste volume calculations show 45,860 gallons of drainable interstitial liquid (DIL) remaining in the tank, of which 40,779 gallons is calculated as the quantity of pumpable liquid remaining (PLR). Video observation reveals there is no supernatant liquid remaining. *Single-Shell Tank Interim Stabilization Evaluation*, TFC-ENG-CHEM-P-15, requires a jet pumped waste tank to contain less than 50,000 gallons of DIL, less than 5,000 gallons of supernatant liquid, and achieve a maximum pump out or in-flow rate of 0.05 gallons per minute for interim stabilization. However, a single-shell waste tank can be declared interim stabilized by major equipment failure by meeting the DIL and supernatant quantities, but without meeting the 0.05 gpm criteria. Tank 241-U-108 meets the criteria for interim stabilization due to major equipment failure.

The hydraulic properties and pumping history of waste tanks in U-Farm are similar and indicate that achieving zero pumpable liquid in 241-U-108 is not likely. A quantitative assessment of predicted pumpable liquid remaining (PPLR) was performed per RPP-12324 "Interim Stabilization Calculations: Pumpable Liquid Remaining". Table 3-3 of this document specifies the predicted quantity of pumpable liquid that will remain once the stabilization criteria have been fulfilled. The predicted pumpable liquid remaining for 241-U-108 is 22,800 gallons. If the 241-U-108 saltwell pump was restarted, the remaining pumpable volume of the tank will be the difference between 40,779 gallons and 22,800 gallons. Therefore, the remaining pumpable volume of 17,979 gallons will be assumed for the following calculations in this evaluation.

If repairs at 241-U-108 were completed, the time to pump the remaining liquid from the tank is dependent upon the flow rates of the liquid wastes into the saltwell screen. Due to the flow restrictions within the U-Farm transfer line, the transfer rate could not sufficiently overcome the screen in-flow rate and therefore a final in-flow rate determination was not possible. Therefore, the last unrestricted net pump flow rate of liquid from 241-U-108, (~0.1 gpm) (144 gallons per day (gpd)), will be assumed. By observation, the output flow rate will decrease and approach 0.05 gpm (72 gpd) as the interstitial liquid level drops. Therefore, to determine the estimated time to pump 241-U-108, an average rate of 0.075 gpm (108 gpd) at

50% operating efficiency is assumed. Using this rate and efficiency, the time to remove the remaining pumpable liquid of 17,979 gallons from tank 241-U-108 is approximately 48 weeks.

Over this 48-week period, numerous system and transfer line flushes would be required to prevent the typical plugging seen with saltwell transfer systems. The transfer line hold up volume, based on the existing encased transfer line or a replacement Hose-in-Hose transfer line (HIHTL), is 870 gallons and would require frequent flushes. For example, from 12/09/03 to 12/17/03 a total of 556 gallons of flush water and 167 gallons of dilution water were required to maintain the transfer system operable. During this time a total of 868 gallons of net waste was pumped. If pumping was restarted and similar flush volumes were required for operability, an additional 34,704 gallons of flush and dilution waters would be added to the DST waste inventory to remove the estimated 17,979 gallons of liquid from 241-U-108.

To estimate exposure, the option of installing a new transfer line will be evaluated. To facilitate the replacement of the failed transfer line (including installation of new jumpers and manifold), the cover plate at 241-U-D valve pit would have to be removed and workers would be required to work over the open pit. Before the transfer line and ancillary equipment could be installed, extensive preparation of the valve pit is required to minimize the spread of contamination. Radiological Control Planning prepared an exposure estimate based on the original pit activity for a manifold installation at 241-U-D. This evaluation detailed the level of radiation exposure for each member of the field crew performing the job. The work to install the manifold and subsequent jumper connections would result in a dose exposure of 450 mrem for the job. Additionally, the 241-U-108 saltwell pump and the HIHTL from 241-U-108 to 241-U-D have exceeded their recommended service lives and would require replacement and/or functional testing for continued use. Pit activities supporting pump replacement and transfer line pressure testing would add an additional 300 mrem and 800 mrem, respectively. A total exposure of 1550 mrem would result from these activities.

Costs for repair and continued operation of 241-U-108 are based on Single-Shell Tank Interim Stabilization, Rev. 3 Working Schedule Baseline. It is estimated that it would cost $100,000 to concurrently replace the failed pump and hydro-test the 241-U-108 HIHTL. An additional cost of $125,000 would be needed to fabricate, install, and meet waste disposal costs at the 241-U-D valve pit. If repairs were made and pumping was restarted, the project expenses to calibrate and maintain the current equipment at 241-U-108 for the projected 48-week pumping schedule is estimated to cost $330,000. Additionally, an annual waste profile costing $9,400 is required during the projected pumping duration of 241-U-108. The total project cost for restart and continued maintenance is $564,400.

Based upon these evaluations of ALARA principles, remaining pumpable liquid, generation of excess wastes, and cost concerns, it is recommended that tank 241-U-108 be declared interim stabilized on the basis of major equipment failure as defined by *Single-Shell Tank Interim Stabilization Evaluation*, TFC-ENG-CHEM-P-15.

If you have any questions, please call me on 373-2408, or Stephen L. Swaney on 373-3472.

Michael J. Sutey, Manager
Retrieval/Closure System Engineering

SLS

Concurrence: M. R. Koch, Director, Retrieval/Closure Engineering

Signature _____ Date 8·16·04

Single-Shell Tank Interim Stabilization Evaluation Form

TANK: **241-U-109**

(Jet Pumping only) Reason for stopping jet pumping:

[x] Meets 0.05 gpm criteria, Date of Shutdown _____9/10/01_____

[ ] Major equipment failure, Date of Shutdown _____

Tank Waste Surface Level Condition and Comments: _____ SEE DESCRIPTION PAGE 2 _____

Evaluation: (See continuation page for calculations and additional comments)

Photo/video review completed - Date of most recent photo/video _____11/01/01_____

[x] Tank history, temperature profile and intrusion reviews completed and no anomalies identified

Starting Liquid Level ___ 176.9" _____ Method ___ENRAF___ Date ___03/11/00____
Final liquid level _____ 79.8" _____ Method ____LOW____ Date ___04/01/02____
Total Net Pumped Volume ____78.4 Kgal_____
Capillary Height Used in Calculation ___6"____
Final Solids Volume _____354.0 Kgal_____
Final Average Flow rate _____0.0196 gpm_____
Calculated Porosity _____0.284 _____
Supernatant Volume Remaining ____ 0 gal ____
Drainable Interstitial Liquid _____47.1 Kgal_____
Drainable Liquid Remaining _____47.1 Kgal____
Pumpable Liquid Remaining ____ 42.8 Kgal_____

[ ] Justification letter attached (Interim Stabilization System Engineer)

Disposition of Tank:

[x] Tank Interim Stabilized
[ ] Tank Not Interim Stabilized; Re-start Pumping

Evaluation prepared by SST or DST System Engineer: _____ JFR 4/3/02 Date 4/3/02

Evaluation checked by Process Control Engineer: VCBoyles Date 4/3/02

SST Stabilization Engineer: _____ JFR 4/3/02 Date 4/3/2K2

APPROVED BY:

Manager, SST Stabilization Engineering: T.W. Horner Date 4/5/02

Manager, Process Control: _____ Date 4/4/2002

Manager, SST or DST Engineering: _____ Date 4/3/02

Single-Shell Tank Interim Stabilization Evaluation Form (cont

EVALUATION CALCULATIONS AND COMMENTS:

TANK: **241-U-109**

The surface of 241-U-109 is primarily a brown colored waste with irregular patches of white salt crystal. Approximately 70% of the waste surface is covered by the salt formations. Also visible are disturbed areas of the waste surface that appear to be blue/green in color. The surface level slopes slightly from the tank sidewall down to a depression in the center of the tank. This depression is cone (frustum) shaped and estimated to be 15 feet in diameter, at the waste surface level, based on the visible portion of the saltwell screen. The depression is centered on the saltwell screen. The ENRAF probe is located 5 feet from the tank sidewall and reads 156.78 inches. The waste surface appears dry and shows signs of cracking due to saltwell pumping. Liquid observation well (LOW) readings indicate a final interstitial liquid level (ILL) of 79.836 inches. Since there are no current dip tubes readings, the Final LOW Reading will be used for these calculations. There is no visible liquid within the tank, making the supernatant estimate 0 gallons. All levels are based off the tank centerline dished bottom. Calculations do not take into account any retained gas within the waste.

DATA

Final LOW Reading (04/01/02) = 79.836 inches ~ 79.8 inches

Final ENRAF Reading (04/01/02) = 156.775 inches ~ 156.8 inches

Divergence point of ENRAF and LOW (03/14/00) = 173.16 inches ~ 173.2 inches

Initial Liquid Level at Start of Pumping (03/11/000) = 176.94 inches ~ 176.9 inches

Porosity = (Net waste pumped from 03/14/00) / [(LOW divergence point – final LOW level) *2750 gal/in]

Height of Sludge Layer (35 Kgal) above bottom = 20.2 inches @@

Tank Dished Bottom Volume (Lower 12" Height) = 12,500 gallons **

Supernatant Volume (11/01/01 In-Tank Video Estimate) = 0 gallons

D.I.L. = Drainable Interstitial Liquid **
= [(Final LOW Reading – 20.2") – (6" Capillary Ht.)]* 2750 gal/in * porosity + 35,000gal * sludge porosity

D.L.R. = Drainable Liquid Remaining **
= D.I.L. + supernatant liquid

P.L.R. = Pumpable Liquid Remaining **
= D.L.R. – [((18" Unpumpable Ht – 12")* 2750 gal/in + 12,500 gallons) * porosity]

**Reference HNF-2978, Rev. 2
@@Reference HNF-EP-0182-160

Evaluation Prepared by [signature] JFR 4/3/02 Date 4/3/02

Evaluation Checked by VC Boyles SJS Date 4/3/02

Single-Shell Tank Interim Stabilization Evaluation Form (cont.,

EVALUATION CALCULATIONS AND COMMENTS:

TANK: **241-U-109**

POROSITY:

Porosity = (Net waste pumped (since 03/14/00)) / [(LOW divergence point – final LOW level) *2750 gal/in]

= (73,047 gallons / [(173.2" – 79.8") * 2750 gal/in] = 0:2844 = 28.4%

LOW BASIS:

(Note: The lower 20.2" (35,000 gallons) of the tank volume is sludge @ 15% porosity – Ref. HNF-2978)

DIL = [(79.8" – 20.2" – 6") * 2750 gal/in] * 0.284 + (35,000 gal * 0.15)

= [(147,400 * 0.284) + (5,250 gallons)] = 47,112 gallons (47.1 Kgal)

DLR = DIL + Supernatant = 47,112 gallons + 0 gallons = 47,112 gallons (47.1 Kgal)

PLR = DLR – [[(18" – 12") * 2750 gal/in + (12,500 gal)]* 0.15]

= 47,112 gal – [(29,000 gal)*0.15] = 47,112 - 4350 = 42,762 gallons (42.8 Kgal)

SOLIDS VOLUME:

The upper waste surface level 156.8 inches (ENRAF level) slopes gradually towards a cone frustum shaped central depression with diameters of 15 feet and 4 feet centered on the saltwell screen. The level at the top of the cone frustum is approximately 148.2 inches. At this point the slope of the waste drops 40 inches at a 60° angle to a flat surface at a level of 108.2 inches. The waste surface is approximately level from the ENRAF to the tank wall (5 ft). A cone frustum can be subtracted from the cylindrical volume to estimate the upper waste volume above the central depression. The middle waste volume of the tank is calculated by finding the volume of the void space, created by the cone frustum of the central depression, and subtracting it from the middle cylindrical volume. See figure on following page. The upper and middle volumes are then added to the lower and dish volumes to obtain the total volume as follows:

Volume (upper) = [Vol. of (156.8 in–148.2 in) * 2750 gal/in] – Vol. (cone frustum)

(Where frustum volume is = pi * H/3 (R_1^2 + R_2^2 + sqrt. (R_1^2 * R_2^2)) * 7.481 gal/ft^3)

= 23,650 gal – [(pi * 0.717 ft/3) * ((32.5 ft)^2 + (7.5 ft)^2 + ((32.5 ft)^2 * (7.5 ft)^2)^0.5)] * 7.481 gal/ft^3

= 23,650 gallons – 7,615 gallons = 16,035 gallons

Volume (middle) = [Vol. of (148.2 in–108.2 in) * 2750 gal/in] – Vol. (cone frustum)

(Where frustum volume is = pi * H/3 (R_1^2 + R_2^2 + sqrt. (R_1^2 * R_2^2)) * 7.481 gal/ft^3)

= 110,000 gal – [(pi * 3.33 ft/3) * ((7.5 ft)^2 + (2 ft)^2 + ((7.5 ft)^2 * (2 ft)^2)^0.5)] * 7.481 gal/ft^3

Evaluation Prepared by [signature] JFR 4/3/02 Date 4/3/02

Evaluation Checked by VC Boyles SAS Date 4/3/02

Single-Shell Tank Interim Stabilization Evaluation Form (cont

EVALUATION CALCULATIONS AND COMMENTS:

TANK: **241-U-109**

SOLIDS VOLUME (cont.):

= 110,000 gallons – 1,965 gallons = 108,035 gallons

Volume (lower) = [Vol. of (108.2 in – 12 in)* 2750 gal/in] = 96.2 in * 2750 gal/in = 264,550 gallons

Volume (Tot) = Vol. (upper) + Vol. (middle) + Vol. (lower) + Vol. dish bottom (lower 12")

Volume (Tot) gallons = 16,035 + 108,035 + 264,550 + 12,500 = 401,120 gallons = 401.1 Kgal

Solids Volume remaining = Volume (tot) – Drainable Liquid Remaining (DLR)

= 401,120 gals – 47,112 = 354,008 = 354.0 Kgal

SOLIDS CALCULATION FIGURE

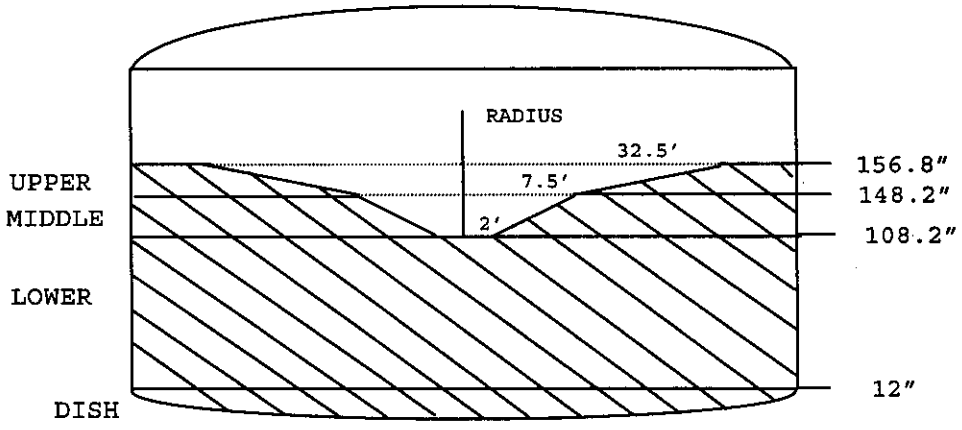

FLOW DATA:

The final pump rate is found by data obtained from 1130 September 8th to 0930 September 10th, 2001 that show a total of 54 gallons of waste were pumped over the time period of 2760 minutes (46.0 hours), while the pump ran in AUTOMATIC mode. These data were taken during the final shift of pumping operations on U-109 before the pump was shutdown for stabilization review at 0930 on September 10th, 2001. Pumping of 241-U-109 had been continuous since 730 hours on September 8th for 50 hours of operation in AUTOMATIC mode without a shutdown. All data were taken after the final saltwell screen flush on September 4th. The following equation shows the pumping rate for this final pump run:

Pump Rate = [54 gallons/2760 minutes] = (0.0196 gpm)

More extensive calculations for this flow data, as well as other information may be found in the tank history file, per HNF-IP-0842, Vol. 4 Section 4.1, paragraph 3.4.1.

Evaluation Prepared by KA Hall DFR 4/3/02 Date 4/3/02

Evaluation Checked by UC Boyles SJS Date 4/3/02

Tank: 110-U

Evaluation (see continuation page for calculations and additional comments):

☒ *Photograph review completed - Date of most recent photographs 12/11/84

☒ Tank History review completed

☒ Tank temperature profile review completed prior to 1/3/84.

Surface Description: Surface consists of a rough, dry and gray colored sludge. Recent photographs did not turn out well, but they did reveal a mound of sludge (~1/2 asphere) with a height of ~ 6 ft. Date 12/14/84

Solids Level 61.8 Date 12/14/84 Method Manual FIC

Liquid Level 61.8 Date 12/14/84 Method Manual FIC

Solids Volume 186,000

Estimated Drainable Liquid Volume 15,000

Average Maximum Tank Temperature, past 6 months NOT AVAILABLE

Estimated Supernatant Volume 0

☐ Cost/Benefit Analysis attached

Evaluation Performed by _____ Date _____ Checked by _____ Date _____

Disposition of Tank:

☒ Tank Interim Stabilized at 15,000 gallons of drainable liquid

☐ Tank not Interim Stabilized; stabilization activities resumed

Approved by: Manager, TF&EPE RAV L. H. Kos Date 12/17/84

Manager, TFS&O G. T. Dupelow Date 12/19/84

Program Manager R A Zinski Date 12-20-84

DISTRIBUTION: TF&EPE Tank File, Tank Farm Surveillance Analysis, Approval Signatures

* Recent photographs were compared with pictures taken 7/12/79 to verify consistency since current pictures weren't of good quality. The mound of sludge was found in both sets of pictures.

EVALUATION CALCULATIONS AND COMMENTS

Tank: 110 U

Page 2 of 2

Approximate Volume of mound: $V_{sphere} = 4/3\,\pi r^3$

Approximate mound to be a 1/2 · sphere with r = 6ft

$\therefore V_{mound} = 2/3\,\pi r^3 = 2/3\,\pi (6ft)^3 = 452 ft^3$

7.481 gallon = 1ft³

$V_{mound} = 452 ft^3 \times \frac{7.481 \text{ gallons}}{ft^3} = 3{,}381$ gallons

Solids Volume: 3,381 + (61.8)(2750) + 12500 = 185831 gallons => 186,000

Drainable Interstitial Liquid = Total Drainable Liquid = (186000 - 66000) .125 = 15,000 gallons

Pumpable Liquid Remaining: (16000 gallons - 6500 gallons) = 8500 gallons

Calculations made by: J. Stan Hill

Checked by: R. Van Winkle

Single-Shell Tank Interim Stabilization Evaluation Form

TANK: **241-U-111**

(Jet Pumping only) Reason for stopping jet pumping:

[ ] Meets 0.05 gpm criteria, Date of Shutdown _____

[x] Major equipment failure, Date of Shutdown ___2/20/03_____

Tank Waste Surface Level Condition and Comments: _____ SEE DESCRIPTION PAGE 2 _____

Evaluation: (See continuation page for calculations and additional comments)

Photo/video review completed - Date of most recent photo/video _____03/25/03_____

[x] Tank history, temperature profile and intrusion reviews completed and no anomalies identified

Starting Liquid Level ___ 131.2" _____ Method _____ENRAF_____ Date ___06/14/02___
Final liquid level _____ 69.9" _____ Method _____LOW_____ Date ___06/19/03___
Total Net Pumped Volume ____85.4 Kgal____
Capillary Height Used in Calculation ___6"____
Final Solids Volume _____222.1Kgal_____
Final Average flow rate _____0.237 gpm____
Calculated Porosity _____0.205_____
Supernatant Volume Remaining ____ 0 gal ___
Drainable Interstitial Liquid _____30.9 Kgal____
Drainable Liquid Remaining ____30.9 Kgal____
Pumpable Liquid Remaining ____25.9 Kgal____

[x] Justification letter attached (Interim Stabilization System Engineer): **7G320-03-mjs.004**

Disposition of Tank:

[x] Tank Interim Stabilized
[ ] Tank Not Interim Stabilized; Re-start Pumping

Evaluation prepared by Retrieval/Closure System Engineer: _____ Date 6/24/2K3

Closure Projects Engineering Support Process Engineer: _____ Date 6/24/03

APPROVED BY:

Manager, Retrieval/Closure System Engineering _____ Date 6/25/03

Manager, Closure Projects System Engineering _____ Date 6/25/03

Manager, SST System Engineering R. HULL _____ Date 6/25/03

Single-Shell Tank Interim Stabilization Evaluation Form (cont.)

EVALUATION CALCULATIONS AND COMMENTS:

TANK: **241-U-111**

INPUT DATA & ASSUMPTIONS

Final Liquid Observation Well (LOW) Reading (6/19/03) = 69.9 inches ~ 69.9 inches

Final ENRAF Reading (6/22/03) = 88.19 inches ~ 88.2 inches

Divergence point = LOW & ENRAF Levels vs. time diverge (supernatant liquid is exhausted)

Divergence point = (based on LOW Level from 10/31/02) = 93.804 inches ~ 93.8 inches

Net Waste Pumped since divergence (use week end 10/27/02 from \\AP012\DPU) = 13,503 gallons

Initial Liquid Level at Start of Pumping (ENRAF – 6/14/02) = 131.2 inches ~ 131.2 inches

Capillary Height (based on LOW and saltcake bases) = 6 inches *

Sludge Volume = 26,000 gallons *

Height of Sludge Layer (26 Kgal) above bottom ~ 16.9 inches

Tank Dished Bottom Volume (Lower 12" Height) = 12,500 gallons *

Supernatant Volume (3/25/03 In-Tank Video Estimate) = 0 gallons

Assumed Sludge Porosity = 17% *

For 100-series (75' dia.) tanks (500, 750, and 1000K gallon SSTs), 1 inch equals 2750 gallons when above the dish bottom. *

EQUATIONS

Drainable Porosity (Saltcake) = Net waste pumped (since 10/31/02)/[(Divergence point – final LOW level)*2750 gal/in]

D.I.L. = Drainable Interstitial Liquid *
= {[Final Adj. LOW Level – Sludge Height – Capillary Height] * 2750 gal/in} * Drainable porosity (saltcake) + (Sludge Volume) * assumed sludge porosity

D.L.R. = Drainable Liquid Remaining *
= D.I.L. + supernatant volume

P.L.R. = Pumpable Liquid Remaining *
= D.L.R. – [(18" Unpump. Ht – 16.9") * Drainable porosity (saltcake) * 2750 gal/in + (Sludge Volume)* assumed sludge porosity]

*Reference HNF-2978, Rev. 4

Evaluation Prepared by _____ Date 6/24/2K3

Evaluation Checked by _____ Date 6/24/03

Single-Shell Tank Interim Stabilization Evaluation Form (cont.)

EVALUATION CALCULATIONS AND COMMENTS:

TANK: **241-U-111**

OBJECTIVE/PURPOSE:

This Single-Shell Tank Interim Stabilization Evaluation provides the data and supporting calculations involved in declaring single-shell waste storage tank 241-U-111 interim stabilized. The criteria to declare 100-series jet-pumped single-shell waste storage tanks to be interim stabilized for interim stabilization are: 1) the tank contains less than 50,000 gallons of drainable interstitial liquid (DIL), 2) the tank contains less than 5,000 gallons of supernatant, and 3) the measured maximum pump-out or in-flow rate is less than 0.05 gallons per minute. In the event of major equipment failure, Criteria 3 may be waived with a letter of justification and management approval.

ANALYSIS METHOD:

The analysis method used for this evaluation relied upon the criteria and equations established in HNF-2978, Rev. 4, *Updated Pumpable Liquid Volume Estimates and Jet Pump Durations for Interim Stabilization of Remaining Single-Shell Tanks*. Calculations presented will utilize the LOW basis method. See the **Calculations** section for equation definitions.

This evaluation follows the applicable guidelines of the *Engineering Calculations* procedure, TFC-ENG-DESIGN-C-10, REV A, and the technical basis and formatting requirements of *Tank Farm Facility Interim Stabilization Evaluation* procedure, HNF-IP-0842, Volume IV, Section 4.1. When complete, this evaluation will be formally released as part of a direct revision to HNF-SD-RE-TI-178, *Single-Shell Tank Leak Stabilization Record*. Additionally, the calculations and tank waste descriptions used in this analysis method are for the end state of saltwell pumping of tank 241-U-111.

TANK WASTE DESCRIPTION:

The following description was obtained by in-tank video taken 03/25/03. The surface of 241-U-111 is a dry, crusty, flat surface saltcake waste with a fairly uniform surface of large cracks and pocked holes that were created as the surface was dried out by saltwell pumping. Saltwell pumping yielded 85,408 gallons of net waste from 241-U-111, while using 5,131 gallons of water for pump flushes and 27,395 gallons of water for dilution. The waste surface appears to be dry and shows no standing water within the tank. A hole (~4 ft diameter) around the saltwell screen shows no evidence of supernatant liquid. The ENRAF plummet is located 5 feet from the tank wall and reads 88.1 inches (taken manually on 3/31/03). The highest waste surface at the tank wall was estimated from the video to be 92 inches. From the wall the waste surface is essentially flat until the hole around the saltwell screen.

Currently, liquid observation well (LOW) readings indicate an ILL of 69.9 inches. Manual ENRAF readings indicate the surface level is 88.2 inches. Dip tube readings are obtained weekly by work package WS-02-0581. The current (6/16/03) dip tube level adjusted for the dip tube offset of 3.25 inches and assuming a zero inch capillary height, is 47.6 inches. All reported levels are based on the centerline of the tank's dished bottom. Calculations do not take into account any retained gas within the waste.

Evaluation Prepared by _____ Date 6/24/2K3

Evaluation Checked by _____ Date 6/24/03

Single-Shell Tank Interim Stabilization Evaluation Form (cont.)

EVALUATION CALCULATIONS AND COMMENTS:

TANK: **241-U-111**

RESULTS/CALCULATIONS

POROSITY:

Drainable Porosity (Saltcake) = Net waste pumped (since 10/31/02)/ [(Divergence point – final LOW level)*2750 gal/in]

= (13,503 gallons) / [(93.8" – 69.9") * 2750 gal/in] *100% = 20.5%

LOW BASIS:

DIL = [(69.9" – 16.9" – 6") * 2750 gal/in] * 0.205 + (26,000 gal * 0.17)

= [129,250 * 0.205 + 26,000 gal * 0.17] = 26,496 + 4420 = 30,916 gallons (30.9 Kgal)

DLR = DIL + Supernatant = 30,916 gallons + 0 gallons = 30,916 gallons (30.9 Kgal)

PLR = DLR – [(18" – 16.9") * .205 * 2750 gal/in + (26,000 gal) * 0.17]

= 30,916 gal – [(3,025 gal * .205) + (26,000 gal * 0.17)] = 30,916 – (620 + 4420) =

= 30,916 gal – 5040 gal = 25,876 gal = (25.9 Kgal)

SOLIDS VOLUME:

The following description was obtained by review of the in-tank video taken 3/26/03. The ENRAF level during the video was 88.1 inches; however, the current level of 88.2 inches will be used for the solids volume estimate. All estimates regarding waste dimensions were obtained by comparison with known dimensions of installed in-tank equipment and drawing D-2, Rev. 6, *Half Section at Centerline of 75 ft. Tank* from Project 9536, PO # 1451-1/2. The main waste surface of 241-U-111 is 88.2 inches based on ENRAF reading from 6/22/03. The surface of the solids waste is essentially flat and covered with various deep trough-like cracks due to saltwell pumping. There is an approximate 4-foot diameter hole around the saltwell screen, with no visible bottom. This volume of missing waste around the saltwell screen is considered negligible and is not considered in the final solids volume calculations. Per HNF-2978, Rev. 4 and Best Basis Inventory (BBI) located in the TWINS database; the sludge volume of 241-U-111 is 26 Kgal. For reporting purposes, the total quantity of solids in the tank will be calculated and the sludge volume will be subtracted from this total. This volume difference will then be the reported quantity of saltcake in 241-U-111. For this calculation the saltcake and sludge solids volumes include the interstitial liquid but do not include any supernatant liquid.

The saltwell screen is positioned in the center of the tank. For the purpose of this evaluation, the solids volume will include an evaluation of the tank upper surface volume and the dish volume. See SOLIDS CALCULATION FIGURE (next page). These volumes are then added together to obtain the total volume as follows:

Evaluation Prepared by _____ Date 6/24/2003

Evaluation Checked by _____ Date 6/24/03

Single-Shell Tank Interim Stabilization Evaluation Form (cont.)

EVALUATION CALCULATIONS AND COMMENTS:

TANK: **241-U-111**

RESULTS/CALCULATIONS (cont.)

SOLIDS VOLUME (cont):

SOLIDS CALCULATION FIGURE

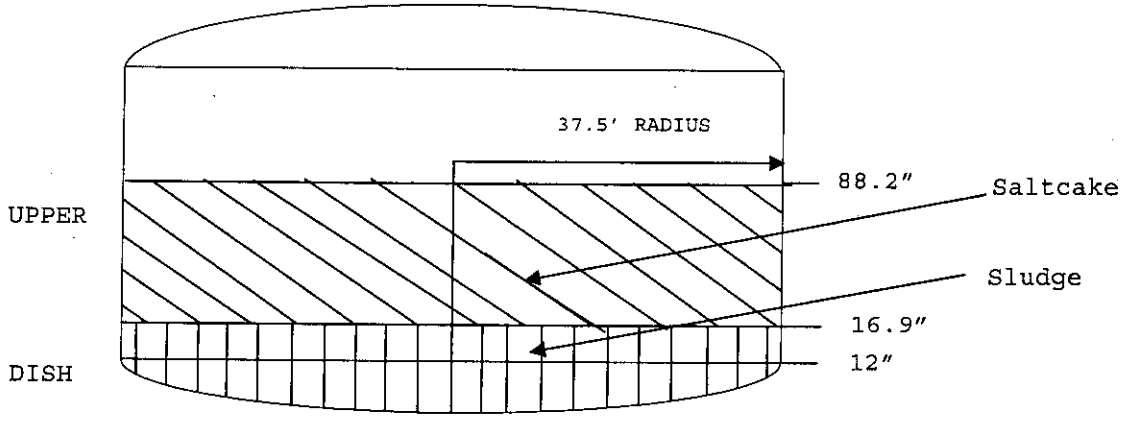

Volume (Upper) = Volume of [(88.2 in – 12 in) * 2750 gal/in]

Volume (Upper) = (76.2 in.* 2750 gal/in) = 209,550 gallons

Volume (Dish) = 12,500 gallons

Volume (Tot) gallons = 209,550 + 12,500 = 222,050 gallons = 222.1 Kgal

Solids Volume Remaining = Volume (Tot) – Supernatant Liquid

= 222,050 gallons - 0 gals = 222,050 gallons = 222.1 Kgal

Saltcake Volume remaining = Solids Volume Remaining – Sludge Volume

= 222,050 gallons gals – 26,000 gals = 196,050 gallons = 196.1 Kgal

FLOW DATA:

The final pump rate is found by data obtained from 1130 to 1730 February 17, 2003 that show a total of 113.6 gallons of waste pumped over the time period of 480 minutes (8 hours), while the pump ran in AUTOMATIC mode. This time span was the last stable operating shift of the saltwell pump. The final screen flush was on February 18, 2003, but the pump failed during start-up. The pump did not operate after the 17th of February 2003. The following equation shows the pumping rate for this final pump run:

Pump Rate = [113.6 gallons / 480 minutes] = (0.237 gpm)

The flow rate exceeds the minimum stabilization flow rate of 0.05 gallons per minute. The flow rate of 0.237 gallons per minute will be used in the letter of justification for major equipment failure to calculate expected pumping durations and water usage if pumping of 241-U-111 is restarted.

Evaluation Prepared by _____ Date 6/24/2003

Evaluation Checked by _____ Date 6/24/03

Single-Shell Tank Interim Stabilization Evaluation Form (cont.)

EVALUATION CALCULATIONS AND COMMENTS:

TANK: **241-U-111**

SOFTWARE:

None.

REFERENCES:

TO-505-111, Rev. A-6 and A-20, *Perform 241-U-111 Saltwell Pumping.*

Project 9536, PO # 1451-1/2, Drawing D-2, Rev. 6, *Half Section at Centerline of 75 ft. Tank.*

HNF-2978, Rev. 4, *Updated Pumpable Liquid Volume Estimates and Jet Pump Durations for Interim Stabilization of Remaining Single-Shell Tanks.*

TFC-ENG-DESIGN-C-10, REV A, *Engineering Calculations.*

HNF-IP-0842, Volume IV, Section 4.1, *Tank Farm Facility Interim Stabilization Evaluation*

HNF-SD-RE-TI-178, Rev. 8, *Single-Shell Tank Leak Stabilization Record.*

WS-02-0581, *241-G Weight Factor and Specific Gravity Readings*

Tank Waste Information System (TWINS) 2003, *queried June 22*, 2003, [posted Tank Integrity Reports], Hanford intranet at http://twinswhse.pnl.gov/

20030217U111.CSV, electronic PLC records file from server \\ap003\saltwell\2003csv\2ndmonth.

Pumpchrts_PE.xls, Excel log of saltwell pumping history from server \\ap012\dpu\pumpchartsPE.

CONCLUSIONS/RECOMMENDATIONS:

241-U-111 has met the applicable criteria for declaration of interim stabilization due to major equipment failure. See Page 1 for summary and final tank disposition and approvals and letter 7G320-03-MJS.004 "Justification for declaring 241-U-111 interim stabilized, due to major equipment failure."

ATTACHMENTS:

All record attachments, raw data, and calculations for this evaluation, as well as other information may be found in the tank history file maintained by Interim Stabilization Engineering, per the requirements HNF-IP-0842, Vol. 4 Section 4.1, paragraph 3.4.1.

Evaluation Prepared by _____ Date 6/24/2K3

Evaluation Checked by _____ Date 6/24/03

CH2MHILL
Hanford Group, Inc.

INTEROFFICE MEMO

From:	Retrieval/Closure System Engineering	7G320-03-mjs.004
Phone:	373-2408 S7-24	
Date:	June 13, 2003	
Subject:	JUSTIFICATION FOR DECLARING TANK 241-U-111 INTERIM STABILIZED, DUE TO MAJOR EQUIPMENT FAILURE	
To:	T. L. Hissong S7-83	

Copies:	W. B. Barton	R2-11	M. R. Koch	S7-83
	J. M. Conner	S5-13	D. J. Saueressig	S7-20
	K. C. Dorwick	S7-83	S. L. Swaney	S7-24
	R. A. Flores	S7-20	W. T. Thompson	S7-70
	T. M. Horner	S5-13	R. P. Tucker	S7-20
	K. J. Hull	T4-07	D. T. Vladimiroff	S7-20
	M. A. Knight	R2-11	MJS/LB	

Saltwell pumping of Tank 241-U-111 began on June14, 2002, and continued until February 20, 2003, when the saltwell jet pump failed due to a suspected impeller detachment. A total of 85,400 gallons of liquid waste was transferred to 241-SY-102 before the failure occurred. Waste volume calculations show 34,400 gallons of drainable interstitial liquid remaining in the tank, of which 29,300 gallons is estimated to be pumpable. Video observation reveals there is no supernatant liquid remaining. "*Tank Farm Facility Interim Stabilization Evaluation*," HNF-IP-0842, Volume IV, Section 4.1, requires a jet pumped waste tank contain less than 50,000 gallons of drainable interstitial liquid, less than 5000 gallons of supernatant liquid, and achieve a maximum pump out or in-flow rate of 0.05 gallons per minute (gpm) for interim stabilization. However, a single-shell waste tank can be declared interim stabilized by major equipment failure by meeting the drainable interstitial liquid and supernatant quantities, but without meeting the 0.05 gpm criteria. Tank 241-U-111 meets the criteria for interim stabilization due to major equipment failure.

The hydraulic properties and pumping history of waste tanks in U-farm are similar and indicate that achieving zero pumpable liquid in Tank 241-U-111 is not likely. A quantitative assessment of predicted pumpable liquid remaining was performed per RPP-12324 "Interim Stabilization Calculations: Pumpable Liquid Remaining". Table 3-3 of this document specifies the predicted quantity of pumpable liquid that will remain once the stabilization criteria have been fulfilled. The predicted pumpable liquid remaining for 241-U-111 is 22,800 gallons. If the 241-U-111 saltwell pump was replaced and restarted, the remaining pumpable volume of the tank will be the difference between 29,300 gallons and 22,800 gallons. Therefore, the remaining pumpable volume of 6,500 gallons will be assumed for the following calculations in this evaluation.

If repairs at Tank 241-U-111 were completed, the time to pump the remaining liquid from the tank is dependent upon the flow rates of the liquid wastes into the saltwell screen. The current flow rate of liquid into the saltwell screen at 241-U-111 is calculated at 0.237 gpm, or 341 gallons per day (gpd). By observation, the flow rate of liquid into the saltwell screen will decrease and approach 0.05 gpm (72 gpd) as the interstitial liquid level drops. Therefore, to determine the estimated time to pump 241-U-111, an average rate of 0.143 gpm (206 gpd) at 50% operating efficiency is assumed. Using this rate and efficiency, the time to remove the remaining pumpable liquid of 6,500 gallons from Tank 241-U-111 is approximately 9 weeks.

Over this 9-week period, numerous system and transfer line flushes would be required to prevent the typical plugging seen with saltwell transfer systems. The transfer line hold up volume of 850 gallons necessitates frequent flushes. For example, from December 20, 2002 to January 5, 2003, a total of 1,450 gallons of flush water (including 1,300 gallons of transfer line flushes on the common header line from 241-U-107), and 220 gallons of dilution water were required to maintain the transfer system operable. During this time a total of 1,100 gallons of waste was pumped. If pumping were restarted and similar flush and dilution volumes were required for operability, an additional 15,000 gallons (13,000 gallons flush water + 2,000 gallons dilution water) would be added to the waste stream to remove the estimated 6,500 gallons of liquid from 241-U-111.

To facilitate the replacement of the failed jet pump, the pump pit cover plate at 241-U-111 would have to be removed and workers would be required to work over the open pit. Before the pump assembly can be replaced, extensive preparation of the pump pit is required to minimize the spread of contamination. A report from the Radiological Control planner (Exposure estimate for Tank 241-U-111 saltwell replacement) details the level of radiation exposure for each member of the field crew performing the job. The work to prepare the pump pit and replace the pump assembly would result in a dose exposure estimated to be 922 mrem for the job.

Costs for repair and continued operation of 241-U-111 are based on Single-Shell Tank Interim Stabilization, Revision 3, *Working Schedule Baseline*. It is estimated that it would cost $79,000 to replace the equipment and meet waste disposal costs at 241-U-111. If repairs were made and pumping was restarted, the project expenses to calibrate and maintain the current equipment at 241-U-111 for the projected 9-week pumping schedule is estimated to cost $62,000. Additionally, an annual waste profile costing $9,000 is required for the restart of 241-U-111. Since further tanks are being pumped in U-farm complex, separate personnel are not required to staff U-farm. Therefore, there are no additional personnel costs associated with continued pumping. The total project cost for restart and continued operation is $150,000.

Based upon these evaluations of ALARA principles, remaining pumpable liquid, generation of excess wastes, and cost concerns, it is recommended that Tank 241-U-111 be declared interim stabilized on the basis of major equipment failure as defined by "*Tank Farm Facility Interim Stabilization Evaluation*" procedure, HNF-IP-0842, Volume IV, Section 4.1.

If you have any questions, please call me on 373-2408, or Mr. Stephen L. Swaney on 373-3472.

M. J. Sutey, Manager
Retrieval/Closure System Engineering
CH2M HILL Hanford Group Inc.

SLS/lsc

CONCURRENCE:

Date: 6/13/03

M. R. Koch, Director,
Retrieval/Closure Engineering
CH2M HILL Hanford Group Inc.

INTERIM STABILIZATION EVALUATION - NON-JET PUMPED TANKS

Tank: 112-U

Evaluation (see Continuation Page for calculations and additional comments):

[X] Photograph review completed - Date of most recent photographs 2/3/84

[X] Tank history review completed

[X] Tank temperature profile review completed

Surface Description: The surface is covered with a supernatant pool approximately 59' in diameter and 2.5" deep. The manual tape is contacting solids. Date 2/3/84

Solids Level 13.3" Date 9/19/79 Method MT

Liquid Level 13.3" Date 2/3/84 Method photo

Solids Volume 44,700 gal

Estimated Drainable Liquid Volume 4,300 gal

Average Maximum Tank Temperature, past 6 months 69°F 6/81 most recent data

Estimated Supernatant Volume 4300 gal

[ ] Cost/Benefit Analysis attached

Evaluation Performed by [signature] Date 2/10/84 Checked by [signature] Date 2-10-84

Disposition of Tank:

[X] Tank Interim Stabilized at 4300 gallons of drainable liquid

[ ] Tank not Interim Stabilized; stabilization activities resumed

Approved by: Manager, TF&EPC [signature] Date 2/12/84

Manager, TFS&O [signature] Date 2-15-84

Program Manager [signature] Date 2-15-84

DISTRIBUTION: TF&EPC Tank File, Tank Farm Surveillance Analysis, Approval Signatures

NOTE: Tank 112-U was previously Interim Stabilized on 9/19/79. This form is for record purposes only.

INTERIM STABILIZATION EVALUATION - NON-JET PUMPED TANKS

(CONTINUATION PAGE)

Evaluation Calculations and Comments

TANK: 112-U

TOTAL WASTE VOLUME = (WASTE LEVEL (in)) x 2750 gal/in + 12,500 gal

WASTE LEVEL = 13.3"

TOTAL WASTE VOLUME = 13.3 in x 2750 gal/in + 12,500 gal = 48,000 gal

SUPERNATANT VOLUME: SUPERNATANT POOL IS ESTIMATED TO BE 2.5" deep AND 59' in diameter FROM 7/31/81 photos.

SUPERNATANT VOLUME = $\pi \times \frac{59^2 ft^2}{4} \times 2.5 in \times \frac{ft}{12 in} \times 7.48 \frac{gal}{ft^3}$ = 4260 gal ≈ 4300 gal

SOLIDS VOLUME = TOTAL WASTE VOLUME - SUPERNATANT VOLUME

SOLIDS VOLUME = 48,000 gal - 4300 gal = 44,700 gal

DRAINABLE INTERSTITIAL LIQUID = (SOLIDS VOLUME - CAPILLARY HEIGHT x 2750 gal/in) x porosity

CAPILLARY HEIGHT FOR SLUDGE = 24" porosity = 12.5%

DRAINABLE INTERSTITIAL LIQUID = (44,700 gal - 24 in x 2750 gal/in) x .125 = 0 by definition

DRAINABLE LIQUID REMAINING = DRAINABLE INTERSTITIAL LIQUID + SUPERNATANT

DRAINABLE LIQUID REMAINING = 0 + 4300 gal = 4300 gal.

ASSUMING THE SLUDGE HAS SALTCAKE CHARACTERISTICS:

CAPILLARY HEIGHT = 12" porosity = 45%

DRAINABLE INTERSTITIAL LIQUID = (44,700 gal - 12 in x 2750 gal/in) x .45 = 5300 gal

DRAINABLE LIQUID REMAINING = 5300 gal + 4300 gal = 9,600 gal.

CALCULATIONS DONE BY Tim D. Kilpatrick

CHECKED BY Nancy E. Bell

INTERIM STABILIZATION EVALUATION

TANK NUMBER: 201-U EFFECTIVE DATE: 8-31-79

LIQUID LEVEL & RISER NO. R-1 28"

SOLIDS LEVEL & RISER NO. R-1 27.50"

EST. SUPERNATE LIQUID VOLUME 1,000 gallons

EST. DRAINABLE INTERSTITIAL LIQUID VOLUME 600 gallons

This volume assumes sludge to be 12.5% drainable liquid.

TEMPERATURE: Max. 68° F

IS TANK HEAT LOAD A PROBLEM?

yes ____ no X unknown

IS THERE A POTENTIAL DOME LOAD PROBLEM? yes ____ no X

PHOTOGRAPH EVALUATION: (Order #779105 ; L.L. 2'3 1/2" ; Date 9-13-77)

The surface is 90% liquid. The liquid pool takes up the center of the tank and this pool cannot be reached with a pump. There is a band of solids at the tank perimeter.

COMMENTS:

The waste is in a dished shape and the solids level is being taken near the outer edge of the dish. Since there are no access ports near the tank center this perimeter point must be used. Thus the interstitial liquid volume estimate is conservatively high.

ADVANCED STABILIZATION RECOMMENDATION: It appears that further liquid removal could be accomplished by air drying.

Prepared By: V. Dennis Mayer 8-22-79

Reviewed By: John H Bailey 8-23-79

INTERIM STABILIZATION EVALUATION

TANK NUMBER: 202-U EFFECTIVE DATE: 8-31-79

LIQUID LEVEL & RISER NO. R-1 27"

SOLIDS LEVEL & RISER NO. R-1 24"

EST. SUPERNATE LIQUID VOLUME 1,000 gallons

EST. DRAINABLE INTERSTITIAL LIQUID VOLUME 600 gallons

This volume assumes sludge to contain 12.5% drainable liquid.

TEMPERATURE: 61° F

IS TANK HEAT LOAD A PROBLEM?

yes ____ no X unknown ____

IS THERE A POTENTIAL DOME LOAD PROBLEM? yes ____ no X

PHOTOGRAPH EVALUATION: (Order #779106 ; Liquid Level 2'3" ; Date 9-13-77)

The surface area is 90% liquid. There is a ring of solids at the tank wall. The liquid pool cannot be reached with a pump.

COMMENTS:

The waste is in a dished shape and the solids level is being taken near the outer edge of the dish. Since there are no access ports near the tank center, this perimeter point must be used thus the interstitial liquid volume estimate is conservatively high.

ADVANCED STABILIZATION RECOMMENDATION: It appears that further liquid removal could be accomplished by air drying.

Prepared By: V. Dennis Mayer 8-22-79

Reviewed By: John H. Bailey 9-23-79

INTERIM STABILIZATION EVALUATION

TANK NUMBER: 203-U

EFFECTIVE DATE: 8-31-79

LIQUID LEVEL & RISER NO. R-1 19"

SOLIDS LEVEL & RISER NO. R-1 19"

EST. SUPERNATE LIQUID VOLUME 500 gallons

EST. DRAINABLE INTERSTITIAL LIQUID VOLUME 400 gallons

This volume assumes sludge to contain 12.5% drainable liquid.

TEMPERATURE: 86° F

IS TANK HEAT LOAD A PROBLEM?

yes ____ no X unknown ____

IS THERE A POTENTIAL DOME LOAD PROBLEM? yes ____ no X

PHOTOGRAPH EVALUATION: (Order #87195 ; Liquid Level ; 1'7 1/4" ; Date 7-3-79)

The surface is approximately 70% liquid. This liquid is in a shallow pool taking up the center portion of the tank which cannot be reached with a pump through any existing risers. The manual tape is touching near the solid liquid interface.

COMMENTS:

The waste is in a dished shape and the solids level is being taken near the outer edge of the dish. Since there are no access ports near the tank center, this perimeter point must be used. Thus the interstitial liquid volume estimate is conservatively high.

ADVANCED STABILIZATION RECOMMENDATION: It appears that further liquid removal could be accomplished by air drying.

Prepared By: V. Dennis Mayer 8-22-79

Reviewed By: John W. Bailey 8-23-79

INTERIM STABILIZATION EVALUATION

TANK NUMBER: 204-U EFFECTIVE DATE: 8-31-79

LIQUID LEVEL & RISER NO. R-1 18"

SOLIDS LEVEL & RISER NO. R-1 12.5"

EST. SUPERNATE LIQUID VOLUME 1,000 gallons

EST. DRAINABLE INTERSTITIAL LIQUID VOLUME 400 gallons

This volume assumes sludge to contain 12.5% drainable liquid.

TEMPERATURE: 80° F

IS TANK HEAT LOAD A PROBLEM?

yes ____ no X unknown ____

IS THERE A POTENTIAL DOME LOAD PROBLEM? yes ____ no X

PHOTOGRAPH EVALUATION: (Order #779108 ; Liquid Level 1' 6" ; Date 9-13-77)

The surface area is 90% liquid. The 10% solids are seen as a ring at the tank wall. There is a submersible pump at the edge of the liquid pool. Attempts have been made to transfer liquid, and these attempts have not been successful.

COMMENTS:

The waste is in a dished shape and the solids level is being taken near the outer edge of the dish. Since there are no access ports near the tank center, this perimeter point must be used. Thus the interstitial liquid volume estimate is conservatively high.

ADVANCED STABILIZATION RECOMMENDATION: It appears that further liquid removal could be accomplished by air drying.

Prepared By: V. Dennis Mayer 8-22-79

Reviewed By: John W. Bailey 8-23-79

DISTRIBUTION SHEET

To	From	Page 1 of 1
DISTRIBUTION	S.L. SWANEY	Date 6/30/2005
Project Title/Work Order		EDT No. N/A
SINGLE-SHELL TANK INTERIM STABILIZATION RECORD		ECN No. N/A

Name	MSIN	Text With All Attach.	Text Only	Attach./ Appendix Only	EDT/ECN Only
D.A. BARNES	R1-14	X			
C.E. HAMPTON	S7-20	X			
J.S. BOETTGER	S7-24	X			
J.N. DOELER	S7-24	X			
R.A. DODD	S7-83	X			
A.N. NAIKNIMBALKAR	R2-12	X			
B.M. HANLON	R1-14	X			
R.E. HEATH	S7-24	X			
T.L. HISSONG	S7-83	X			
R.E. RAYMOND	S7-83	X			
J.W. CAMMANN	S7-83	X			
M.R. KOCH	S7-83	X			
J.L. COWIN	H6-19	X			
L.S. KROGSRUD	S7-24	X			
D.G. BAIDE	S7-24	X			
J.N. APPEL	R2-12	X			
D.J. SAUERESSIG	S7-67	X			
N.J. SCOTT-PROCOTOR	S5-01	X			
S.L. SWANEY	G6-88	X			
W.F. ZUROFF	S7-67	X			
M.J. SUTEY	S7-70	X			
J.H. RASMUSSEN	R2-12	X			
N.W. KIRCH	R2-58	X			
N.L. HULSE	R2-12	X			
D.M. NGUYEN	R2-12	X			
D.L. BANNING	R2-12	X			
K.M. BOWEN	R2-12	X			
US DEPT. OF ENERGY					
M.C. BROWN	H6-60	X			
J.D. LONG	H6-60	X			
US DEPT. OF ECOLOGY					
N.H. UZIEMBLO	HO-57	X			