START

0017660

WHC-EP-0472

Facility Effluent Monitoring Plan for the 284-E and 284-W Power Plants

BEST AVAILABLE COPY

9 2 1 1 2 3 6 7 0 2 1 4

Prepared for the U.S. Department of Energy
Office of Environmental Restoration
and Waste Management

Westinghouse
Hanford Company Richland, Washington

Hanford Operations and Engineering Contractor for the
U.S. Department of Energy under Contract DE-AC06-87RL10930

Approved for Public Release

DEC 1991
RECEIVED
EDMC

LEGAL DISCLAIMER

This report was prepared as an account of work sponsored by an agency of the United States Government. Neither the United States Government nor any agency thereof, nor any of their employees, nor any of their contractors, subcontractors or their employees, makes any warranty, express or implied, or assumes any legal liability or responsibility for the accuracy, completeness, or any third party's use or the results of such use of any information, apparatus, product, or process disclosed, or represents that its use would not infringe privately owned rights. Reference herein to any specific commercial product, process, or service by trade name, trademark, manufacturer, or otherwise, does not necessarily constitute or imply its endorsement, recommendation, or favoring by the United States Government or any agency thereof or its contractors or subcontractors. The views and opinions of authors expressed herein do not necessarily state or reflect those of the United States Government or any agency thereof.

This report has been reproduced from the best available copy.
Available in paper copy and microfiche.

Available to the U.S. Department of Energy
and its contractors from
Office of Scientific and Technical Information
P.O. Box 62
Oak Ridge, TN 37831
(615) 576-8401

Available to the public from the U.S. Department of Commerce
National Technical Information Service
5285 Port Royal Road
Springfield, VA 22161
(703) 487-4650

Printed in the United States of America

DISCLM-1.CHP (1-91)

WHC-EP-0472

UC-721

Facility Effluent Monitoring Plan for the 284-E and 284-W Power Plants

D. R. Herman

Date Published
November 1991

Prepared for the U.S. Department of Energy
Office of Environmental Restoration
and Waste Management

Westinghouse Hanford Company
P.O. Box 1970
Richland, Washington 99352

Hanford Operations and Engineering Contractor for the
U.S. Department of Energy under Contract DE-AC06-87RL10930

Approved for Public Release

WHC-EP-0472

WESTINGHOUSE HANFORD COMPANY APPROVAL PAGE

Document Title: Facility Effluent Monitoring Plan for the 284-E and 284-W Power Plants

Prepared by:

D. R. Herman
Plant Engineer

11-7-91
Date

Approved by:

A. Greenberg
Manager, 200 Area
Steam & Water Utilities

11-7-91
Date

9 2 1 2 7 1 7 0 2 1 7

FACILITY EFFLUENT MONITORING PLAN FOR THE 284-E AND 284-W POWER PLANTS

J. M. Nickels

ABSTRACT

A facility effluent monitoring plan is required by the U.S. Department of Energy in DOE Order 5400.1 for any operations that involve hazardous materials and radioactive substances that could impact employee or public safety or the environment. This document is prepared using the specific guidelines identified in* A Guide for Preparing Hanford Site Facility Effluent Monitoring Plans, WHC-EP-0438**. *This facility effluent monitoring plan assesses effluent monitoring systems and evaluates whether they are adequate to ensure the public health and safety as specified in applicable federal, state, and local requirements.*

This facility effluent monitoring plan is the first annual report. It shall ensure long-range integrity of the effluent monitoring systems by requiring an update whenever a new process or operation introduces new hazardous materials or significant radioactive materials. This document must be reviewed annually even if there are no operational changes, and it must be updated as a minimum every three years.

---

*General Environmental Protection Program, *DOE Order 5400.1, U.S. Department of Energy, Washington, D.C., 1988.*

**A Guide for Preparing Hanford Site Facility Effluent Monitoring Plans, *WHC-EP-0438, Westinghouse Hanford Company, Richland, Washington, 1991.*

This page intentionally left blank.

CONTENTS

1.0 FACILITY EFFLUENT MONITORING PLAN 1-1
1.1 INTRODUCTION 1-1
1.1.1 Policy 1-1
1.1.2 Purpose 1-1
1.1.3 Scope 1-1
1.1.4 Discussion 1-2

2.0 FACILITY DESCRIPTION 2-1
2.1 PHYSICAL DESCRIPTION 2-1
2.1.1 Ancillary Systems Description 2-2
2.2 PROCESS DESCRIPTION 2-5
2.3 IDENTIFICATION AND CHARACTERIZATION OF POTENTIAL SOURCE TERMS 2-11

3.0 APPLICABLE REGULATIONS 3-1
3.1 PROTECTION OF THE PUBLIC AND THE ENVIRONMENT 3-1
3.2 FACILITY EFFLUENT MONITORING PLAN REQUIREMENTS 3-1
3.3 AIR EMISSIONS 3-3
3.4 LIQUID EFFLUENTS 3-3
3.5 WESTINGHOUSE HANFORD COMPANY EFFLUENT MONITORING REQUIREMENT 3-5

4.0 IDENTIFICATION AND CHARACTERIZATION OF EFFLUENT STREAMS 4-1
4.1 IDENTIFICATION AND CHARACTERIZATION OF SOURCE TERMS CONTRIBUTING TO EACH EFFLUENT STREAM 4-1
4.1.1 Liquid Effluent 4-1
4.1.2 Air Emissions 4-2
4.1.3 Routine Operating Conditions 4-2
4.1.4 Upset Operating Conditions 4-3

5.0 EFFLUENT POINT OF DISCHARGE DESCRIPTION 5-1
5.1 LIQUID EFFLUENT 5-1
5.2 AIR EMISSIONS 5-1

6.0 EFFLUENT MONITORING/SAMPLING SYSTEM DESIGN CRITERIA 6-1

7.0 CHARACTERIZATION OF CURRENT EMS 7-1
7.1 AIR EMISSIONS 7-1
7.2 INSTRUMENTATION DESCRIPTION 7-1
7.2.1 Air Emissions 7-1
7.2.2 Liquid Effluents 7-2
7.3 TECHNICAL SPECIFICATIONS PERTAINING TO EMS 7-2

8.0 HISTORICAL MONITORING/SAMPLING DATA FOR EFFLUENT STREAMS 8-1

9.0 SAMPLE ANALYSIS 9-1
9.1 ANALYTICAL LABORATORY AND PROCEDURES 9-1
9.2 SAMPLE AND DATA CHAIN OF CUSTODY 9-1

CONTENTS (continued)

10.0 NOTIFICATIONS AND REPORTING REQUIREMENTS 10-1
10.1 ENVIRONMENTAL OCCURRENCE 10-1
10.2 PERIODIC ROUTINE EFFLUENT MONITORING REPORTS 10-1

11.0 NEAR-FIELD ENVIRONMENTAL SURVEILLANCE 11-1
11.1 PURPOSE 11-1
11.2 BASIS 11-1
11.3 MEDIA SAMPLED AND ANALYSES PERFORMED 11-1
11.4 LOCATIONS 11-1
11.5 REPORTS 11-2

12.0 QUALITY ASSURANCE/QUALITY CONTROL 12-1
12.1 INTERNAL QUALITY CONTROL 12-1

13.0 INTERNAL AND EXTERNAL PLAN REVIEW 13-1

14.0 COMPLIANCE ASSESSMENT 14-1
14.1 LIQUID EMISSIONS 14-1
14.1.1 Mercury Instruments 14-1
14.2 AIR EMISSIONS 14-2

15.0 SUMMARY AND CONCLUSIONS 15-1

16.0 ATTACHMENTS 16-1
16.1 REFERENCES 16-1
16.2 REGULATIONS 16-4
16.3 GLOSSARY 16-6

LIST OF FIGURES

2-1 Aerial View of 284 East Power Plant 2-3

2-2 Building Schematics--284-W Power Plant 2-4

2-3 Typical Ion-Exchange Unit 2-6

2-4 Basic Flowchart--Water Pretreatment 2-7

2-5 284-W Power Plant Boiler Feedwater System 2-8

2-6 284-E Power Plant Boiler Feedwater System 2-9

4-1 284-W Power Plant Flow Schematic 5-2

4-2 284-E Power Plant Flow Schematic 5-3

LIST OF TABLES

2-1 Testing Requirements Boiler Chemistry 2-10

2-2 Reportable Quantities 2-11

2-3 Hazardous Chemicals Inventory at Risk 2-12

2-4 Hazardous Substances 2-13

6-1 Opacity Monitor Performance Characteristics 6-2

8-1 Liquid Effluent and Emissions from the Power House Stack 8-2

8-2 Ash Analyses 8-2

8-3 Source Testing Emission Results, 284-W Power House, 200-W Area 8-3

8-4 Source Testing Emission Results, 284-E Power House, 200-E Area 8-4

This page intentionally left blank.

LIST OF TERMS

ALARA	as low as reasonably achievable
APCA	Air Pollution Control Authority
BAT	best available technology
BPCT	best practicable control technology
CERCLA	*Comprehensive Environmental Response, Compensation, and Liability Act of 1980*
CFR	Code of Federal Regulations
DOE	U.S. Department of Energy
DW	dangerous waste
Ecology	Washington State Department of Ecology
EDE	effective dose equivalent
EP	Environmental Protection
EPA	U.S. Environmental Protection Agency
FEMP	Facility Effluent Monitoring Plan
HEHF	Hanford Environmental Health Foundation
HEPA	High Efficiency Particulate Air (Filter)
NESHAP	National Emission Standards for Hazardous Air Pollutants
ONC	Occurrence Notification Center
OSM	Office of Sample Management
PNL	Pacific Northwest Laboratory
QA	quality assurance
QC	quality control
RL	U.S. Department of Energy Field Office, Richland
RQ	reportable quantities
SAP	Sample Analysis Plan
S&WU	Steam and Water Utilities Operation
Tri-Party Agreement	*Hanford Federal Facility Agreement and Consent Order*
UST	Underground Storage Tank
WAC	Washington Administrative Code
Westinghouse Hanford	Westinghouse Hanford Company

This page intentionally left blank.

9 2 1 2 1 7 0 3 2 5

FACILITY EFFLUENT MONITORING PLAN FOR THE 284-E AND 284-W POWER PLANTS

1.0 INTRODUCTION

The U.S. Department of Energy (DOE) has recently issued new requirements for complying with DOE and other federal agency environmental regulations. The DOE 5400 Series of orders require Environmental Monitoring Plans for each site, facility, or process that uses, generates, releases, or manages significant pollutants of radioactive and hazardous material.

This Facility Effluent Monitoring Plan (FEMP) for the 284-E and 284-W Power Plants Facilities shall provide sufficient information on the effluent characteristics and the monitoring system, so that a compliance assessment against requirements may be performed.

This plan is intended to be a stand alone document with limited effluent data and information, incorporated by reference. This document was prepared according to the Westinghouse Hanford Company (Westinghouse Hanford) preparation guide for FEMPs, WHC-EP-0438, (WHC 1991b) by the 200 Area Steam and Water Utilities (S&WU) Organization.

1.1 Policy

It is the policy of the DOE and Westinghouse Hanford to conduct effluent monitoring that is adequate to determine whether the public and the environment are adequately protected during DOE operations and whether operations are in compliance with DOE orders, applicable federal, state, and local regulations to ensure that an acceptable level of risk to the public and the environment posed by the S&WU Operations is not exceeded. It is also DOE and Westinghouse Hanford policy that effluent monitoring programs meet high standards of quality and credibility.

1.2 Purpose

This plan fulfills DOE requirements in DOE Order 5400.1 (DOE 1988a) and Westinghouse Hanford Environmental Compliance Manual, WHC-CM-7-5, for a FEMP for each facility that contains radioactive or hazardous pollutants that could impact the public, employee safety and the environment.

1.3 Scope

This document includes plans for sampling, monitoring, and characterizing potential nonradioactive hazardous materials/substances discharged from the S&WU 200 Area Operation effluent.

This plan shall utilize various methods such as best practical control technology currently available or other technology-based criteria, proposed sampling plan, and process knowledge in determining that effluent release limits for liquid effluents and airborne effluents are not exceeded.

There are no radioactive materials used or introduced into operations at the S&WU facilities. Therefore, radioactive liquid effluents and/or radioactive airborne emissions will not be addressed. This FEMP will address only the nonradioactive discharges (i.e., wastewater) to the S&WU 200 Area Operations effluent.

1.4 Discussion

The characterization of the potential nonradioactive constituents in the S&WU effluent streams provides underlying rationale for the preparation of the sampling and monitoring program. The method of characterization discussed in this plan identifies those potential pollutants at the point of generation and tracks the constituents in effluent streams as they move from their generation point to the point of discharge.

Engineering barriers and/or emission control systems which reduce the levels of the constituents in the effluent stream will be discussed using sampling data, operational data, vendor specifications, and Material Safety Data Sheets where available.

Characterization of dangerous waste (DW) pollutants at the point of discharge is required by Title 40, Code of Federal Regulations (CFR), Part 261.3(b) (EPA 1989a). This requirement is only for DW as defined by the Washington Administrative Codes (WAC). Other regulations (found in Section 3.0) provide guidance on the adequacy of effluent monitoring. However, all potential pollutants shall be characterized at the point of generation for two reasons; which are to assess the preventative capabilities of engineered and administrative barriers as well as the potential consequences of an upset release caused by failure of one of these barriers, and to verify and identify where the sampling and proposed or existing monitoring program addresses all pertinent constituents at the point of discharge.

To the best of our knowledge, radioactive materials have not been discharged to the power plants septic system. A further discussion of the sewer systems utilized in the power plants shall be addressed in Section 2.2 of this document.

2.0 FACILITY DESCRIPTION

The 284-E Power Plant utilizes three Erie City boilers, and two Riley Stoker Corporation RX boilers. A back-up oil-fired packaged boiler is no longer used.

The 284-W Power Plant utilizes four Erie City boilers.

Six of the Erie City boilers are of 1943 vintage; the seventh Erie City boiler was installed at the 284-W Power Plant in 1948. All units are water-tube, stoker fired, three drum Sterling type boilers using the dumping grate method for ash removal. Rated capacity is 32 t (70,000 lb)/h continuous steam, and the boilers have a peak capacity of 36 t (80,000 lb)/h continuous steam for 24 h.

The two RX boilers were constructed in 1954 and are stoker-fired, water tube designs utilizing a traveling grate that discharges ash at the front of the boiler into the ash hopper.

Facility management derated all boilers to 29 t (65,000 lb)/h to establish and ensure a safety margin during operations.

The buildings, structures, or special facilities that are included as part of this document are the same for the 284-E and 284-W Power Plant facilities except where noted. The physical description of the ancillary systems are described in Section 2.1.1 of this document.

2.1 PHYSICAL DESCRIPTION

The 284-E Power Plant and ancillary systems are located in the 200-E Area. The 284-W Power Plant and ancillary systems are located in the 200-W Area. Both facilities are located on the Hanford Site, located in the south central region of Washington State.

The power plants are five story, steel frame, concrete block, windowless structures. Included with the building is a coal storage pit, coal unloading hoppers, conveyer belt inclines, switch and crusher houses, brine pit, ash disposal pit, two stacks, and bag houses. The 284 East Building has a coal storage silo that is no longer used.

Located on the ground floor (auxiliary) is the emergency generator, chemical injection pumps, boiler feed pumps, ash pits, air compressors, ash handling pumps. The maintenance shop, locker, and shower rooms are located on the auxiliary floor. The ion resin exchange tanks for water softener regeneration are also located on the auxiliary floor.

The chemical storage room, battery and dc generator room, flash tank, heat exchanger, steam manifolds, forced draft fans, boiler control panels, and stokers are located on the second floor.

The third floor is at the lower drum level and gives access to the flight conveyer, deaerator, and damper power cylinders. The fourth floor is at the upper drum level. The fifth floor is above the coal bunkers and contains the No. 4 coal belt and belt tripper car.

The 284-E Power Plant and ancillary systems are east of the filter plant and raw water pump house and reservoir (Figure 2-1).

The 284-W Power Plant and ancillary systems are south of the filter plant and raw water pump house and reservoir (Figure 2-2).

2.1.1 Ancillary Systems Description

2.1.1.1 Bag houses. The 284-E Power Plant is equipped with three bag houses with six modules per bag house with a total of 858 filter bags per each bag house. The 284-W Power Plant is equipped with two bag houses with five modules per bag house with a total of 715 filter bags per each bag house. (See Section 4.1 for additional information.)

2.1.1.2 Stacks. Stacks are 76 m (250 ft) high, 2.7 m (9 ft) inside diameter at the top, and 4.8 m (16 ft) 16.5 cm (6.5 in.) inside diameter at the bottom. Each stack has two breaching openings approximately 1.5 m (5 ft) by 3.3 m (11 ft). The stacks are brick lined from 1.2 m (4 ft) below the breaching to 46 m (150 ft) above the breaching. The stacks are constructed of concrete and designed to withstand 161 km (100 mi)/h wind. (See Section 4.1 for additional information.)

2.1.1.3 Brine (Salt) Pit. Built in three compartments, two dissolving pits, and one pump pit. Each dissolving pit is 2.4 m (8 ft) wide by 4.3 m (14 ft) long by 2.4 m (8 ft) 15.2 cm (6 in.) deep with a common separating wall between the two. The walls are 30 cm (1 ft) thick reinforced concrete. The pump room is approximately 2.1 m (7 ft) by 3.0 m (10 ft) and houses the two transfer pumps and an electric sump pump. (See Sections 2.2 and 4.1 for additional information.)

2.1.1.4 Ash Disposal Basin. An old borrow pit located behind the power plant functions as the receiving site for the power plant sluicing operation. (See Sections 2.2 and 5.0 for process description.)

2.1.1.5 Ash Handling System. Two ash pumps, hydrojet sluicing assemblies, sluice pump, and a system of transport ditches and special piping. (See Sections 2.2 and 5.0 for additional information.)

2.1.1.6 Chemical Mixing Room and Equipment. Four mixing tanks, piping, and positive displacement injection pumps. (See Section 2.2 for additional information.)

2.1.1.7 Ion Exchange Regeneration Tanks. Three tanks with associated piping. (See Sections 2.2 and 4.1 for additional information.)

Figure 2-1. Aerial View of 284-E Power Plant.

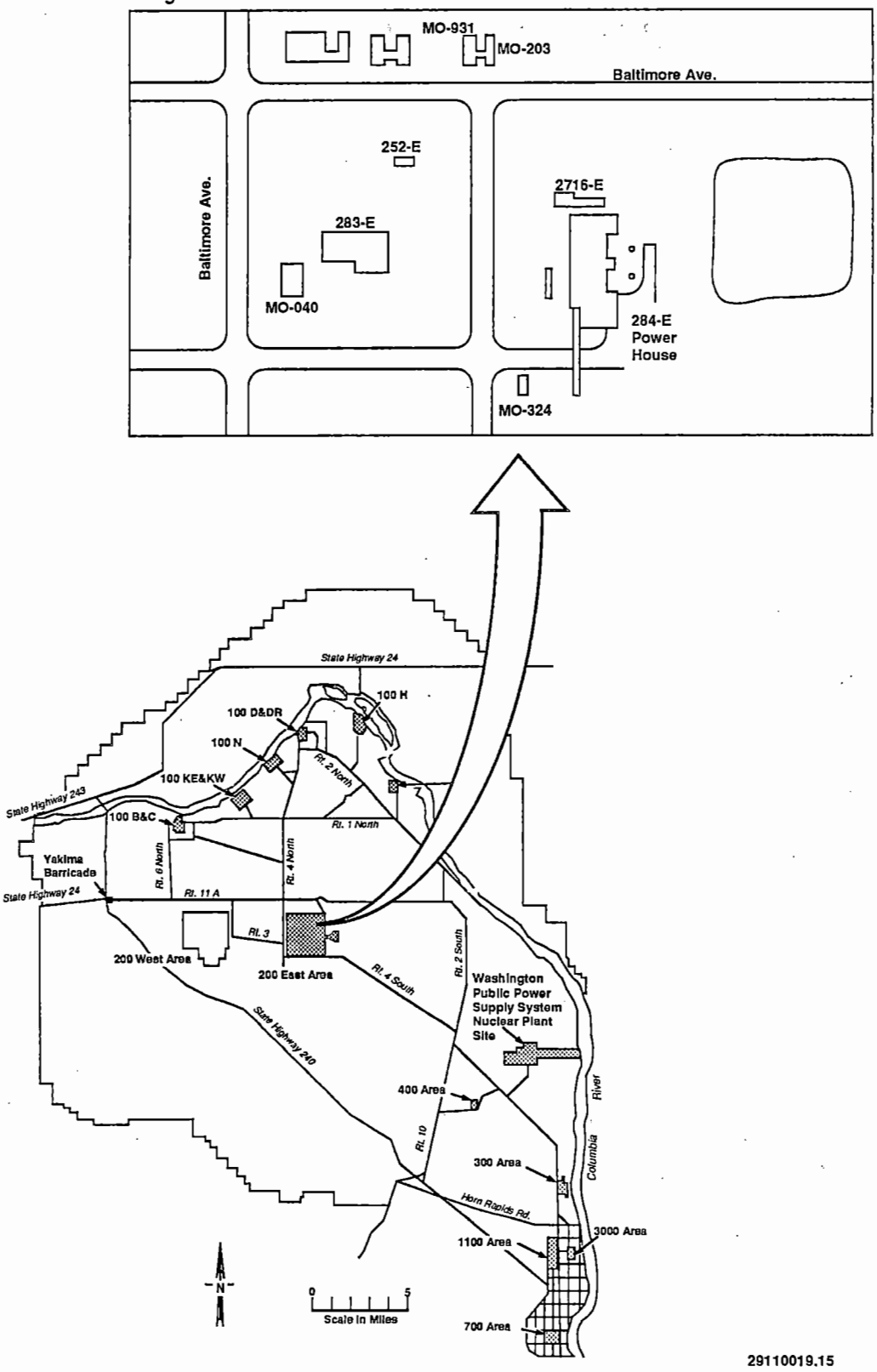

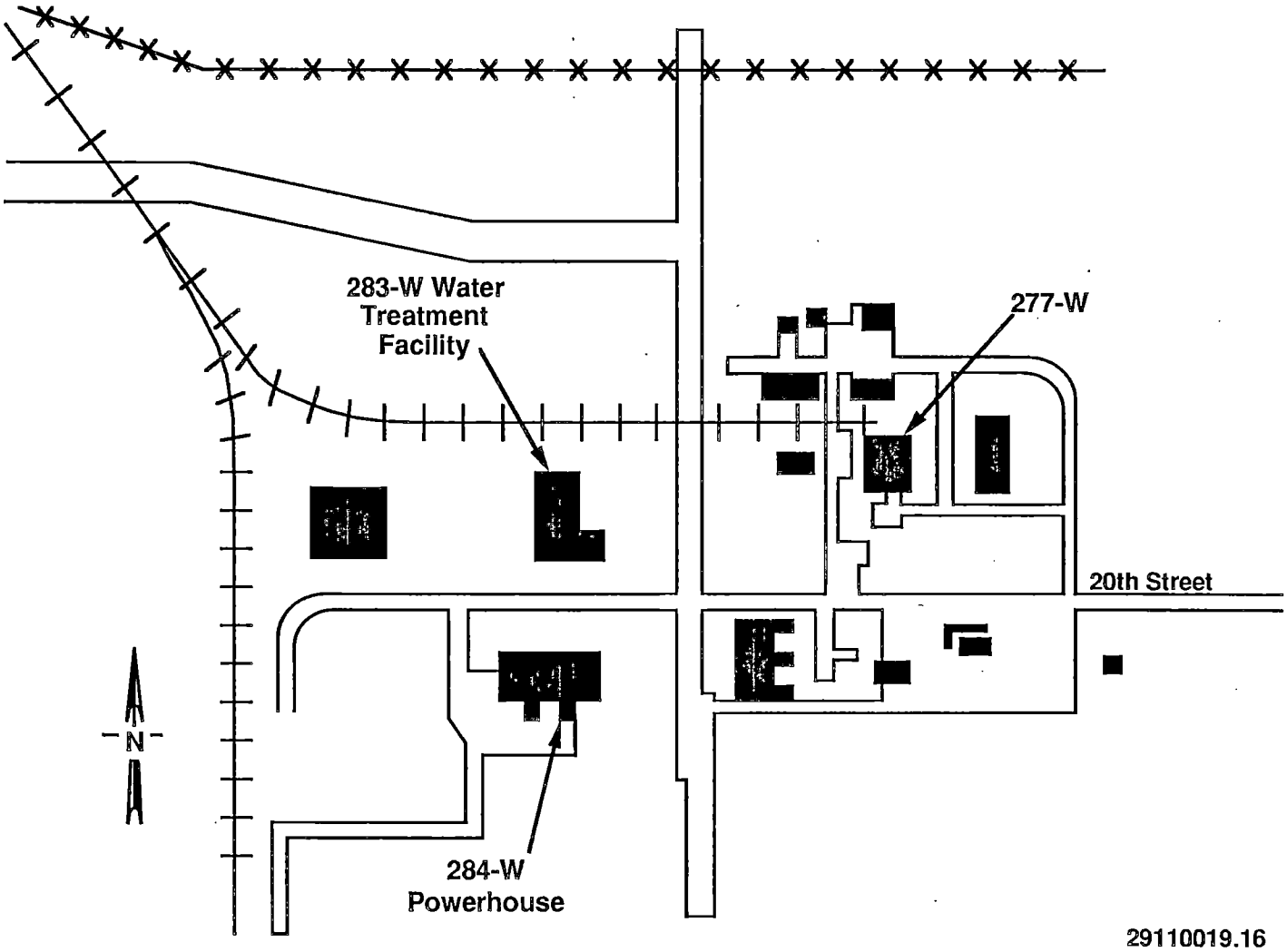

Figure 2-2. Building Schematics--284-W Power Plant.

2.2 PROCESS DESCRIPTION

The 284-E and 284-W Power Plants are coal-fired plants used to generate steam. Electricity is not generated at these facilities. The maximum production of steam is approximately 159 t (175 tons)/h at 101 kg (225 lb)/in^2. Steam generated at these facilities is used in other process facilities (i.e., the B Plant, Plutonium-Uranium Extraction Plant, 242-A Evaporator) for heating and process operations. The functions or processes associated with these facilities do not have the potential to generate radioactive airborne effluents or radioactive liquid effluents, therefore, radiation monitoring equipment is not used on the discharge of these streams. The functions or processes associated with the production of steam result in the use, storage, management and disposal of hazardous materials.

The chemical feed system is routinely used during operations to chemically adjust or balance boiler water to prevent scale formation and inhibit corrosion. Sodium zeolite softener ion exchange units (Figure 2-3) are utilized for water softening, the process whereby the presence of Ca^{++} and magnesium Mg^{++2} salts, are chemically removed. Figure 2-4 (information only) is a basic flow diagram of a water pretreatment system which includes most of these processes. Boiler chemistry control is established by the use of intermittent blowdowns every 4 to 8 h, or when the boiler is idle or on low steaming rate. These blowdowns automatically keep boiler water within desired analysis limits. Continuously removing a small stream of boiler water keeps the concentrations relatively constant. (See Figures 2-5 and 2-6 for feedwater system flow.)

Feedwater chemistry control is needed to determine operating limits for the boilers within the power plant. Table 2-1 outlines the various testing requirements and what they pertain to.

Various reagents are used for water chemistry control of the boiler water. Predesignation of the reagents hazardous constituents were evaluated by the Westinghouse Hanford Solid Waste Engineering group. It was determined that the reagents were nonregulated for disposal purposes. [See WHC-EP-0440, *Facility Effluent Monitoring Plan Determination for the 200 Area Facilities* (WHC 1991c).]

Sluicing is performed during boiler operations to remove bottom ash that is left over after the fuel is burned in the boilers. Bottom ash is the solid, or sometimes molten, material that falls to the bottom of the boiler during combustion. The ash from the furnace is dumped periodically to the ash pits below the furnace grates. Once a day the ashes are removed by sluicing with a stream of high pressure raw water. The ash is then carried by the water into a trench and is sent to the ash pumps, which transfer the water and ash (slurry) to the ash disposal ponds. The hydrojet sluicing assemblies are located at each set of boiler ash pits and one at each stack. They can remove ash at the rate of 0.9 t (1 ton)/min. This effluent stream is nonregulated under 40 CFR 261(4)(b)(6) for hazardous waste exclusions (EPA 1989a).

Figure 2-3. Typical Ion-Exchange Unit.

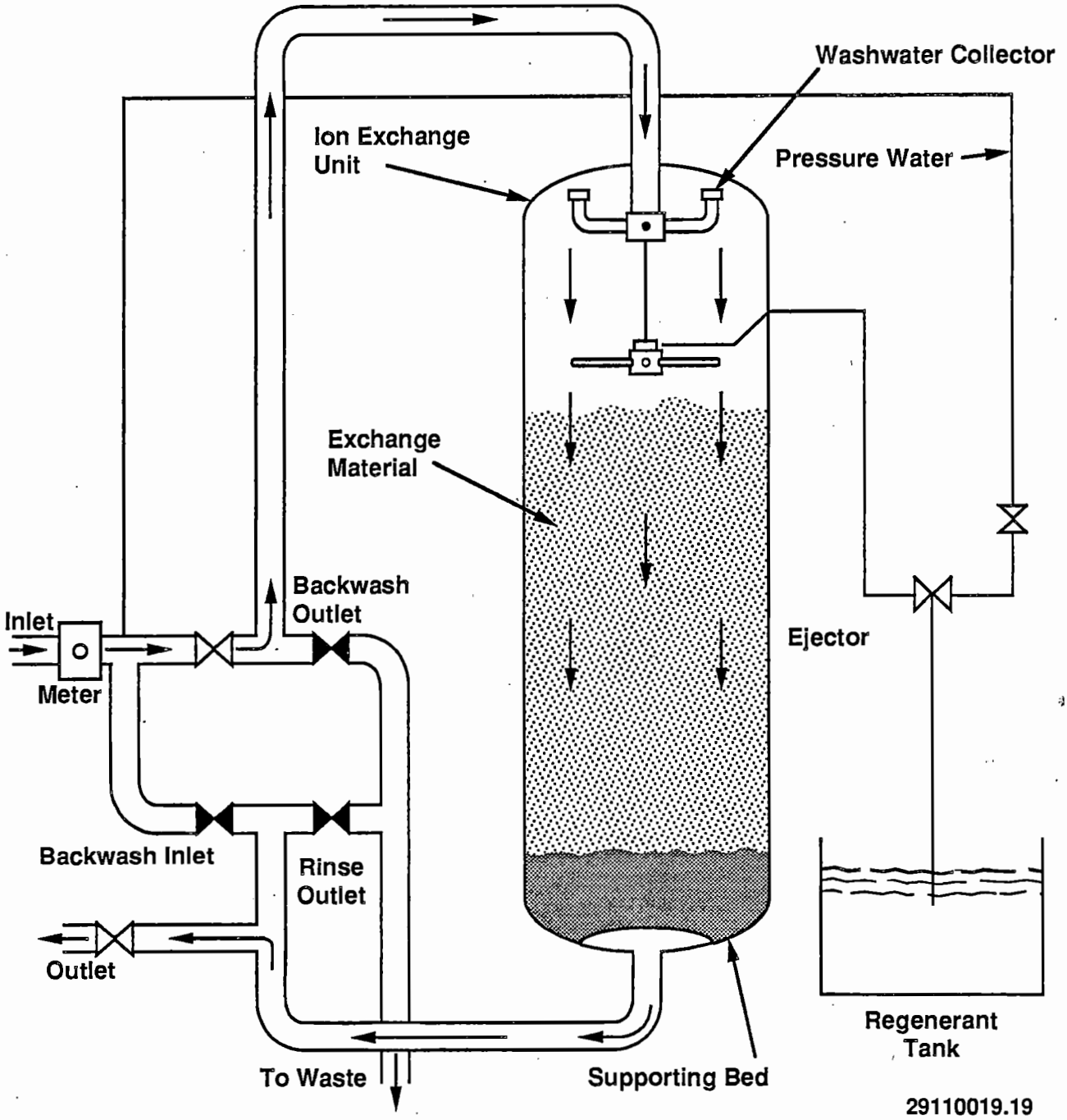

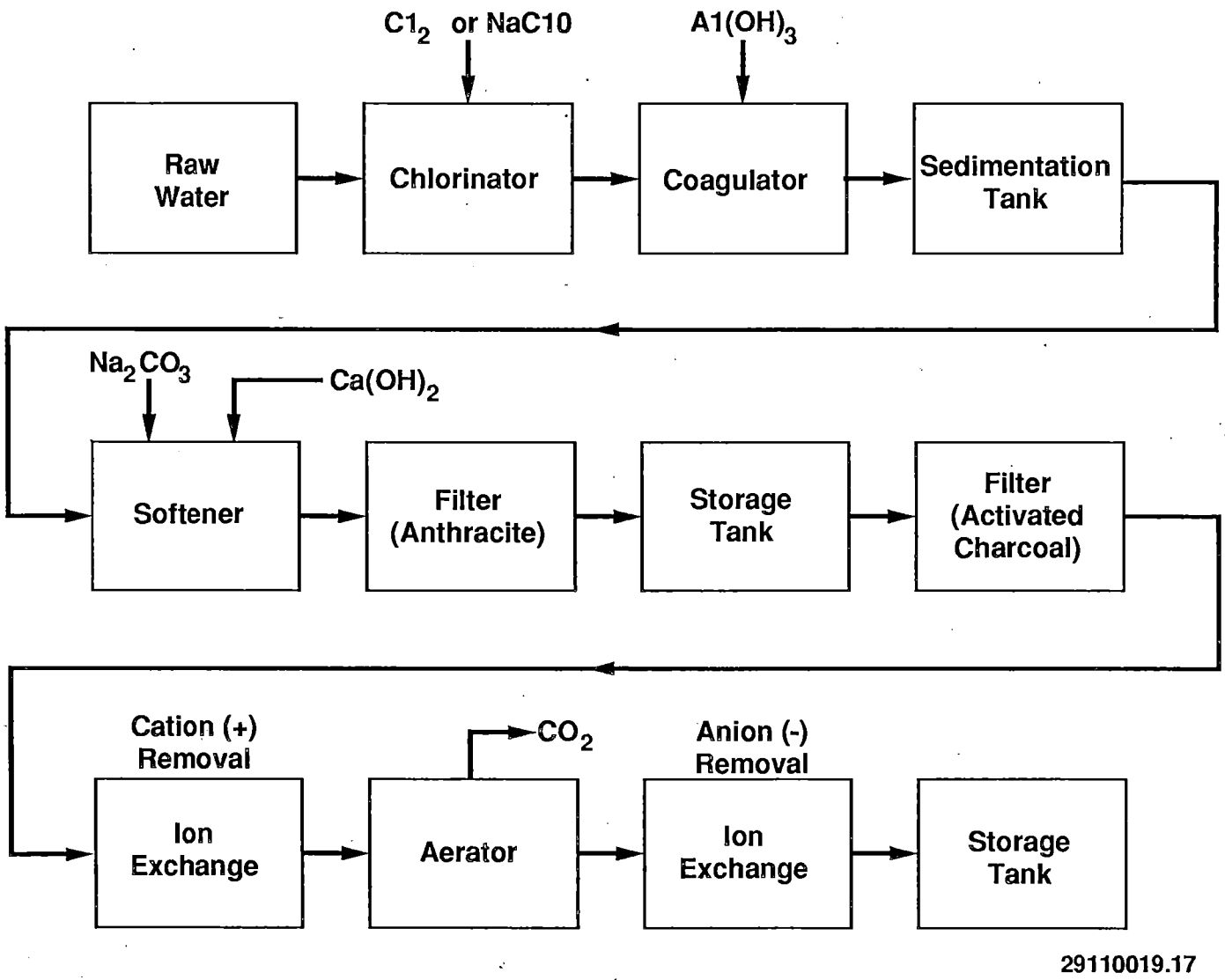

Figure 2-4. Basic Flowchart--Water Pretreatment.

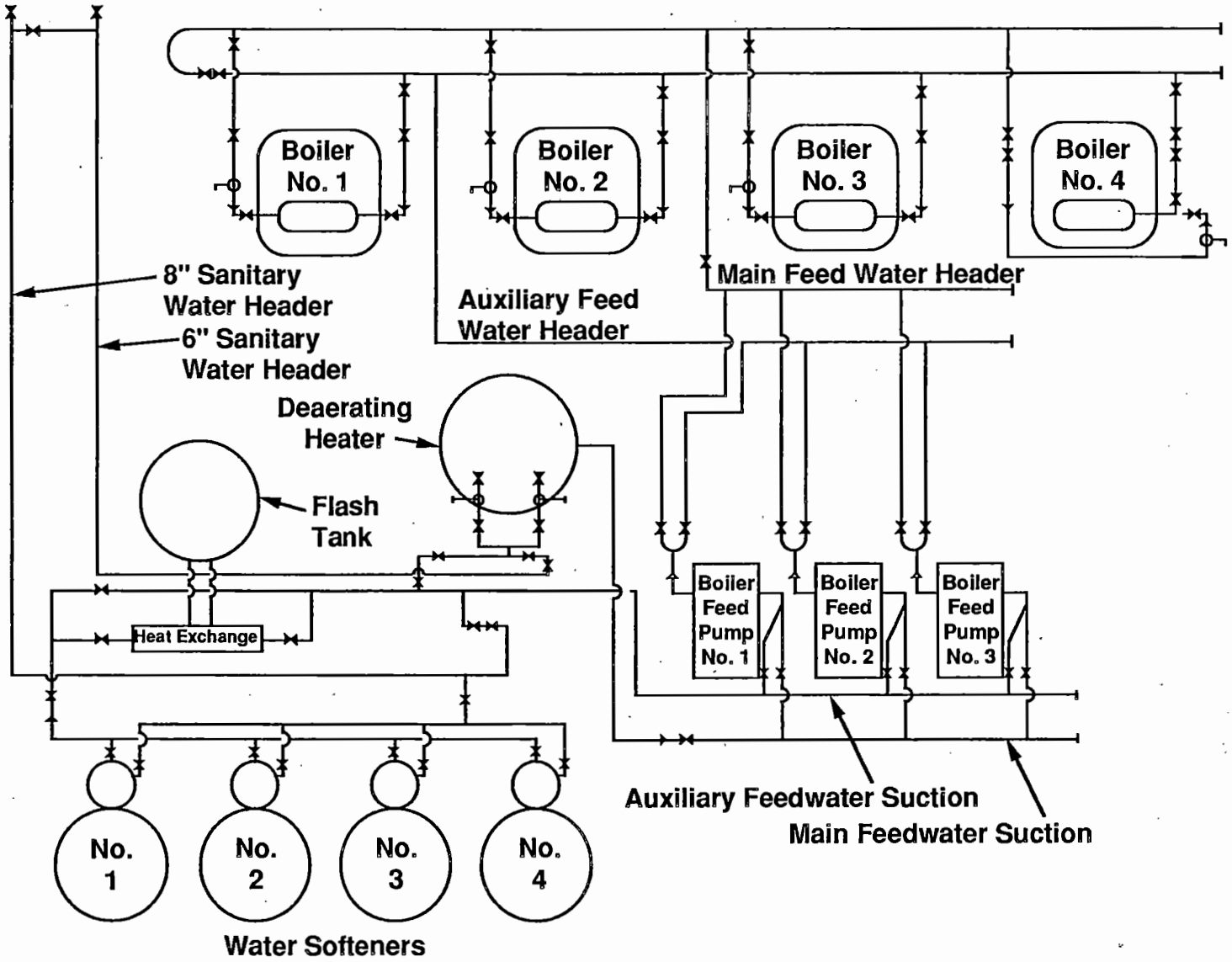

Figure 2-5. 284-W Power Plant Boiler Feedwater System.

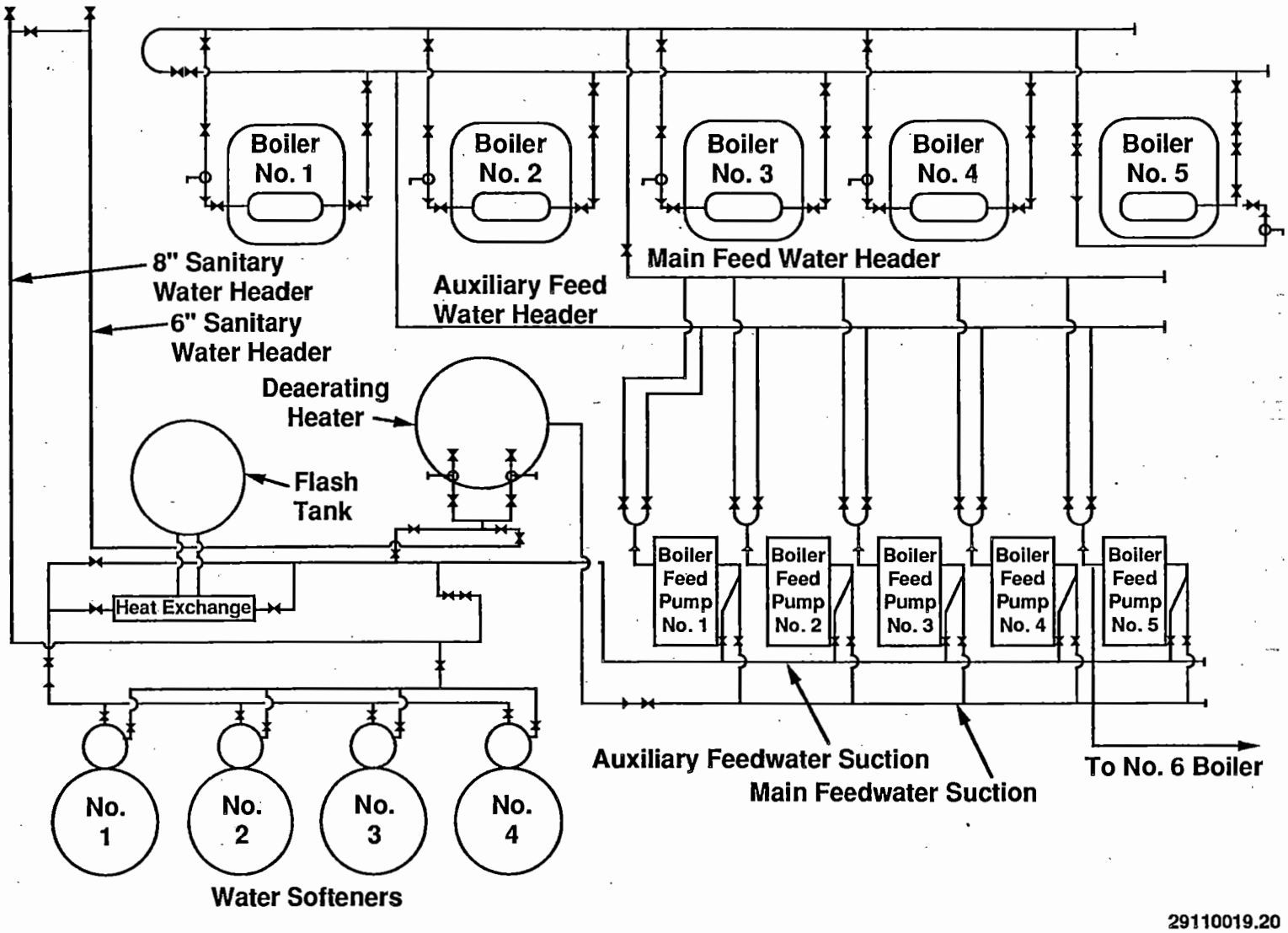

Figure 2-6. 284-E Power Plant Boiler Feedwater System.

Table 2-1. Testing Requirements Boiler Chemistry.

Parameter Controlled	Reason for Control	Method of Control
Dissolved oxygen	To inhibit corrosion	Deaeration Sulfite addition
Dissolved carbon dioxide	To maintain pH	Deaeration
Sulfites	To scavenge oxygen Removal of CL_2 before ion exchange	Sulfite addition Boiler blowdown
Conductivity	To minimize scale formation To indicate increased corrosion	Ion exchange Boiler blowdown
Total dissolved solids	To minimize scale formation To indicate increase corrosion To monitor effectiveness of demineralizer	Ion exchange Boiler blowdown Hydroxide addition
Calcium and magnesium hardness	To reduce hardness of the water	Ion exchange

9 2 1 2 1 5 7 0 2 3 7

The 284 Building is serviced by three different sewer systems.

1. One 10.2-cm (4-in.)-diameter and one 15.2-cm (6-in.)-diameter connection to the sanitary sewer from opposite ends of the building to the service area sewer.

2. One 38.1-cm (15-in.)-diameter and one 30.5-cm (12 in.)-diameter connection to the process sewer to the open ditch.

3. An 20.3-cm (8-in.)-diameter sewer to the ash disposal basin.

Liquid effluent discharge points are described in Section 5.0 of this document.

2.3 IDENTIFICATION AND CHARACTERIZATION OF POTENTIAL SOURCE TERMS

This section provides information on identifying and characterizing potential process source terms present in the S&WU operations. This is based on the list of nonradioactive hazardous materials with the potential of exceeding the reportable quantities (RQ) specified in 40 CFR 302.4 (EPA 1989b), and are presented in Table 2-2.

The reported regulated chemicals, less than 15% potassium hydroxide and 5% sodium hydroxide, listed in WHC-EP-0440 (WHC 1991c) have been replaced with a polymer that contains less than 4% potassium hydroxide. Therefore, the potential discharge to the environment of the afore mentioned chemicals has been eliminated from the facilities. Based on this criteria a solution using this chemical must exceed 10% (wt%) before it would become regulated for its toxicity as waste if discharged from the effluent.

The facility inventory at risk for liquid release, subject to the WHC-EP-0440 is listed in Table 2-3.

The potential exposures that may occur at a facility must also be considered. It is often impossible to identify every toxic substance that exists, certain types of hazardous substances or chemicals are more likely to be present than others. Some of these substances, chemicals, and compounds are listed in Table 2-4.

Table 2-2. Reportable Quantities.

Regulated Material	Quantity kg (lb)	Quantity Released kg (lb)	Reportable Quantity kg (lb)	% of Reportable Quantity/yr
<4% Potassium hydroxide	680.4 (1,500)	None		
Sodium chloride	45,428 (100,150)	<54 (<120)	*	
Mercury	32.6 (72)	Unknown	0.45 (1)	

*No *Comprehensive Environmental Response, Compensation, and Liability Act of 1980/Resource Conservation and Recovery Act of 1976* reportable quantity (WAC 173-303-101, Dangerous Waste Regulations, Toxic Waste D NIOSH Registry LD50) (Ecology 1989a).

Table 2-3. Hazardous Chemicals Inventory at Risk.

Product Name	Used for	Hazardous Ingredient
Alum	Flocculent	Aluminum sulfate
Brine (salt)	Water softener	Sodium chloride
Coal	Steam production	Coal dust
Chlorine	Disinfectant	Chlorine gas
Dearborn* 4812 (in drums)	Boiler water treatment	<5% Sodium hydroxide <25% EDTA, tetra-sodium
Lead	Pump gaskets, valve packing	Lead
Mercury	Instruments	Mercury (metallic)
Polyquest** 683 (in drums)	Boiler water treatment	<4% Potassium hydroxide
Sulfuric acid	Battery banks	Sulfuric acid

*Dearborn and Polyquest are trademarks of W. R. Grace and Company.

Table 2-4. Hazardous Substances.

Hazardous Substance or Chemical Group	Compounds	Users
Aromatic Hydrocarbons	Benzene Ethyl benzene Toluene Xylene	Commercial solvents
Asbestos (or asbestiform particles)		Insulation, fireproof Building, construction, pipes and ducts for water, air, and chemicals
Halogenated Aliphatic Hydrocarbons	Carbon tetrachloride Chloroform Ethyl bromide Methyl chloride Methyl chloroform Methylene chloride Letrachloroethane Letrachloroethylene (perchloroethylene) Trichloroethylene Vinyl chloride	Commercial solvents and intermediates in organic synthesis
Heavy metals	Arsenic Beryllium Cadmium Lead Mercury	Wide variety of industrial and commercial uses

This page intentionally left blank.

9 2 1 2 5 7 0 2 4 1

3.0 APPLICABLE REGULATIONS

This section presents information on the regulations governing effluent monitoring requirements for nonradioactive hazardous effluents and the applicable environmental standards statutes.

Regulations pertaining to effluent releases at the Hanford Site have been developed by several regulatory agencies including the U.S. Environmental Protection Agency (EPA), DOE, Washington State Department of Ecology (Ecology), and the Benton-Franklin-Walla Walla Counties Air Pollution Control Authority (APCA). Westinghouse Hanford has documented the policies for compliance in the Environmental Compliance Manual, WHC-CM-7-5 (WHC 1991a).

Table 3-1 is a brief synopsis of the regulations. Regulations specific to this FEMP can be found in Section 16.2.

3.1 PROTECTION OF THE PUBLIC AND THE ENVIRONMENT

To ensure the health and safety of the public, DOE-controlled facilities are required to monitor effluents that have the potential to contain regulated pollutants. Regulations pertaining to the monitoring and environmental surveillance requirements of effluents are based on and determined frequently by the effluent release limits for that material. Monitoring requirements and associated limitations may also be based on best available technology (BAT), best practicable control technology (BPCT) currently available, or other technology criteria. Some monitoring requirements and associated limitations are based on environmental protection criteria, such as water quality-based discharge standards. The effluent release limits for nonradioactive materials are designed to ensure that an acceptable level of risk to the public and the environment posed by these facilities is not exceeded.

The *National Emission Standards for Hazardous Air Pollutants* (NESHAP) (EPA 1989c), effluent release limits for benzene and radioactive materials are based on limiting risk to the public by limiting the potential dose to the minimally exposed member of the public. Similarly, for most nonradioactive materials, the risk to the public and environment is controlled by limiting the quantities of the materials released.

Nonradioactive effluents, monitoring requirements may also exist at the point of generation for the protection of the worker. To provide a safe workplace environment, monitoring of a nonradioactive effluents is based on the level or quantity of the material present at the point of generation at the facility. An accurate method for projecting from the inventory at risk to the estimated release source term at the discharge point does not exist.

3.2 FACILITY EFFLUENT MONITORING PLAN REQUIREMENTS

Requirements for a FEMP are provided in DOE Order 5400.1, *General Environmental Protection Program* (DOE 1988a). The order provides specific information in Chapter IV on the requirements for effluent monitoring systems

Table 3-1. Applicable Regulations and Standards.

Agency/Originator	Regulation #	HA	HL	RA	RL	Summary/Application
U.S. Department of Energy, (DOE) Washington, D.C.	DOE Order 5400.1, 1988 General Environmental Protection Program	X	X	X	X	Outlines effluent monitoring requirements
	DOE Order 5400.5, 1990 Radiation Protection of the Public and Environment			X	X	Protects public/environment from radiation associated with DOE operations
	DOE Order 5480.4, 1989 Environmental Protection, Safety, and Health Protection Standards	X	X	X	X	Sets requirements for the application of the mandatory environmental protection, safety, and health (ES&H) standards; lists reference ES&H standards
	DOE Order 5484.1, 1981 Environmental Protection, Safety, and Health Protection Information Reporting Requirements	X	X	X	X	Sets requirements for reporting information having environmental protection, safety and health protection significance
	DOE Order 5820.2A, 1988 Radioactive Waste Management	X	X	X	X	Sets radioactive waste management requirements
U.S. Environmental Protection Agency, (EPA) Washington, D.C.	40 CFR 61, 1989 National Emission Standards for Hazardous Air Pollutants	X		X		Sets national emission standards for hazardous air pollutants (NESHAP)
	40 CFR 61, 1989 Subpart A General Provisions	X				Regulates hazardous pollutants
	40 CFR 61, 1989 Subpart H National Emission Standards for Emissions of Radionuclides other than Radon from Department of Energy Facilities			X		Sets emissions standards/monitoring requirements for radionuclides
	40 CFR 122, 1983 EPA Administered Permit Programs: The National Pollutant Discharge Elimination System		X			Governs release of nonradioactive liquids
	40 CFR 141.16, 1989 Safe Drinking Water Act (National Interim Primary Drinking Water Regulations)		X		X	Sets maximum contaminant levels in public water systems
	40 CFR 191, 1985 Disposal of Spent Nuclear Fuel, High-Level and Transuranic Radioactive Wastes				X	Regulates radioactive waste disposal
	40 CFR 261, 1989 Identification and Listing of Hazardous Waste		X			Identifies and lists hazardous wastes
	40 CFR 302.4, 1980 Comprehensive Environmental Response, Compensation and Liability Act of 1980 (CERCLA): Designation, Reportable Quantities and Notification	X	X	X	X	Designates hazardous materials, reportable quantities, notification process

Table 3-1. Applicable Regulations and Standards.

Agency/Originator	Regulation #	HA	HL	RA	RL	Summary/Application
EPA (Cont'd)	40 CFR 355, 1987 Superfund Amendments and Reauthorization Act of 1986 (SARA): Emergency Planning and Notification	X	X			Identifies threshold planning quantities for extremely hazardous substances
	40 CFR 403-471, 1990 Effluent Guidelines and Standards		X			Sets pretreatment standards for wastewater discharged to Public-Owned Treatment Works (POTW)
American National Standards Institute, (ANSI) New York, New York	N 13.1 - 1969* Guidance to Sampling Airborne Radioactive Materials in Nuclear Facilities			X		Sets standards for effluent monitoring systems
	N 42.18*, 1974 Specification and Performance of On-site Instrumentation for Continuously Monitoring Radioactivity in Effluents			X	X	Recommends the selection of instrumentation for the monitoring of radioactive effluents
Washington State Department of Ecology, (Ecology) Olympia, Washington	WAC 173-216, 1989 State Waste Discharge Permit Program		X			Governs discharges to ground and surface waters
	WAC 173-220, 1988 National Pollutant Discharge Elimination system Permit		X		X	Governs wastewater discharges to navigable waterways; controls NPDES permit process
	WAC 173-240, 1990 Submission of Plans and Reports for Construction of Wastewater Facilities		X			Controls release of nonradioactive liquids
	WAC 173-303, 1989 Dangerous Waste Regulations		X			Regulates dangerous wastes; prohibits direct release to soil columns
	WAC 173-400, 1976 General Regulations for Air Pollution Sources	X				Sets emissions standards for hazardous air pollutants
Benton-Franklin Walla-Walla Counties Air Pollution Control Authority, (APCA) Richland, Washington	General Regulation 80-7, 1980	X				Regulates air quality

HA = hazardous airborne.
HL = hazardous liquid.
RA = radioactive airborne.
RL = radioactive liquid.
*Refers to standards that are referenced in the DOE and EPA regulations.

and programs at the Hanford Site. Environmental monitoring requirements differ between new and existing facilities. For a new facility with the potential for adverse impact on the environment a survey must be conducted before to actual start-up. The survey shall (1) establish background levels of radioactive and toxic pollutants, (2) characterize pertinent environmental and ecological parameters, and (3) identify potential pathways for human exposure or environmental impact, as a basis for determining the nature and extent of the subsequent routine operational effluent and environmental monitoring program. Radioactive and nonradioactive pollutant effluents released at the Hanford Site shall be monitored to determine compliance with the DOE 5400 Series of orders. Monitoring is performed to evaluate the effectiveness of effluent treatment and control for material inventory purposes, and to determine compliance with all DOE, EPA, state, and local requirements pertaining to effluents and pollutant impact on the environment.

Guidance on effluent monitoring is also provided by DOE Order 5400.1 (DOE 1988). As a general rule, monitoring should be conducted in a manner that provides accurate measurements of the quantity and/or compliance with applicable discharge and effluent control limits. These include (1) self-imposed administrative limits designed to ensure compliance with in-plant operating limits, effluent standards or guides, and with environmental standards and guides; (2) evaluating the adequacy and effectiveness of containment and waste treatment and control, (3) achieving as low as reasonably achievable (ALARA) levels within technical and economical constraints; and (4) compiling an annual inventory of the material released in effluents and onsite discharges.

Effluent monitoring data collected should include volume, rate of discharge, and content from as close as possible to the point of discharge. Effluent monitoring data pertaining to the release of nonradioactive pollutant material includes the total quantity (amount). An exception would be when a portion of the effluent stream close to the point of generation can be monitored to provide a more accurate estimate of the hazardous material being released from the facility.

Effluents should be monitored at the point at which the applicable standards apply. For example, onsite discharges may be monitored at the waste treatment and disposal system; effluents may be monitored at the point after all treatment and control is completed.

The sampling method and frequency should be determined by considering the purpose or need for the data collected. Data are collected to evaluate the effectiveness of waste treatment and control, demonstrate compliance with operating limits of applicable effluent or performance standards, and compile and trend effluent characteristics. Continuous or proportional sampling is recommended and may be required where there is significant variation in the concentrations and mixtures of potential pollutants in the effluent stream. Periodic sampling may be adequate when concentrations and mixtures are reasonably constant and there is minimal likelihood of unusual variations. Similarly, proportional sampling may be necessary when effluent flow rates fluctuate, whereas a representative grab-sample may suffice for batch discharges. The method of sampling shall be determined before performing a sampling program *Hanford Federal Facility Agreement and Consent Order*, also known as the Tri-Party Agreement (Ecology et al. 1991).

9 2 1 2 1 5 7 0 2 4 5

The EPA regulations pertaining to the release of hazardous substances from DOE facilities are presented in 40 CFR 302, "Designation, Reportable Quantities, and Notification." (EPA 1989a) This regulation, in accordance with Sections 101(14) and 102(a) of the *Comprehensive Environmental Response, Compensation, and Liability Act of 1980* (CERCLA), designates those substances in the statutes of CERCLA, identifies RQ of those substances, and sets forth the notification requirements for releases of those substances. This regulation also lists RQ for hazardous substances designated under Section 311(b)(2)(a) of the *Clean Water Act of 1977*.

3.3 AIR EMISSIONS

DOE Order 5400.5 (DOE 1990a) provides requirements for the monitoring of radioactive and nonradioactive airborne effluents from DOE facilities at the Hanford Site. These orders state that DOE-controlled facilities must comply with 40 CFR 61 (EPA 1989c).

The proposed NESHAPs state that plants are required to monitor their operations continuously and keep records of monitoring results onsite for five years. Facility operators will have to certify on a semi-annual basis that no changes in operations that would require new testing have occurred. Although the report is based on the calendar year, the emission limit applies to any period of 12 consecutive months.

Additional EPA requirements on hazardous substances are contained in 40 CFR Part 302.4. This regulation provides information on RQ of nonradioactive hazardous substances. Unlisted hazardous substances designated by 40 CFR Part 302.4 are regulated in accordance with the EPA toxicity of the contaminant.

In the State of Washington, airborne effluents are regulated by the *Washington Clean Air Act of 1967*. General regulations for air pollution sources are presented in WAC 173-400, including emission standards for sources emitting hazardous air pollutants (Ecology 1976).

Regulations, including DOE orders, state that DOE facilities must comply with the requirements set forth in the NESHAPs. Other regulations [e.g., 40 CFR 52, "Approval and Promulgation of Implementation Plans" (EPA 1972); and DOE Orders 5400.1 (DOE 1988), 5400.5 (DOE 1990), DOE/EH-0173T (DOE 1991), and 5484.1 [DOE 1981)] state that DOE facilities must comply with the requirements set forth in the NESHAPs. Applicable criteria in these regulations are discussed in Section 3.0 of this document.

3.4 LIQUID EFFLUENTS

Requirements limiting the exposure of the public to radioactive materials from DOE-controlled activities through the drinking water pathway are presented in DOE Order 5400.5, Chapter II, Paragraph 1.d. The radiological criteria of the public community drinking water standards of 40 CFR Part 141, "National Interim Primary Drinking Water Regulations" (EPA 1989d), are applicable to S&WU 200 East and West Operations as the providers of potable water to the site under the *Safe Drinking Water Act of 1974*. It is the policy

of DOE to provide an equivalent level of protection for all persons consuming from a drinking water supply operated by, or for, the DOE. These systems shall not cause any person consuming the water to receive an effective dose equivalent (EDE) greater than 4 mrem/yr, excluding naturally occurring radionuclides. In addition, DOE facility operators shall ensure that the liquid effluents from DOE activities shall not cause private or public drinking water systems downstream of the facility discharge to exceed the drinking water radiological limits of 40 CFR Part 141 (EPA 1989d).

Depending on where a liquid effluent (wastewater) is discharged to, certain regulations apply. These regulations are implemented through issuance of permits by federal, state, and/or local agencies. It is the responsibility of the facility, through DOE Field Office, Richland (RL), to apply for the permit appropriate to the effluent being discharged. Before applying for any permits, the applicant must know the sources of its wastewater discharges and where the wastewater is being discharged to. The following regulations apply based on where the wastewater is discharged:

1. The 40 CFR 261(4)(b)(6) (EPA 1989a) provides a hazardous waste exclusion for fly ash, bottom ash, and slag waste; and flue gas emissions control waste generated primarily from combustion of gas or other fossil fuel.

2. Washington State controls discharges to ground and surface waters of the state, under WAC 173-216 (Ecology 1989b) , and issues permits for such discharges. A permit of this type would be necessary for any discharges to land that could infiltrate to groundwater.

Each type of discharge permit identified will typically contain discharge limitations and monitoring requirements. However, the limitations and monitoring requirements will vary depending on the source and type of wastewater being discharged. For instance, discharges to a publicly owned treatment works will be subject to pretreatment standards based on the production process that generates the wastewater for those processes categorized by the EPA. Categorical processes are identified in 40 CFR 403-47 (EPA 1990a). Specific limitations, monitoring, and reporting requirements have been promulgated for each categorical process. In addition to EPAs requirements, the state and local sewerage agencies may impose additional limitations, monitoring, and reporting requirements. Discharges to a navigable waterway also will be subject to certain standards based on the industrial process that generated the wastewater; certain additional limitations are typically imposed in the National Pollutant Discharge Elimination System permit. In all cases, the specific pollutants to be monitored and the frequency of monitoring and reporting will be based on the applicable regulations and the language of the permit.

4.0 IDENTIFICATION AND CHARACTERIZATION OF EFFLUENT STREAMS

4.1 IDENTIFICATION AND CHARACTERIZATION OF SOURCE TERMS CONTRIBUTING TO EACH EFFLUENT STREAM

4.1.1 Liquid Effluent

4.1.1.1 Water Softener Regeneration Solution. Sanitary water passes through a water softener to remove calcium and magnesium before its used in the boiler; this aids in minimizing scaling on the tube bundles. A water softener unit consists of an ion exchange column containing an organic resin and sodium chloride (salt) crystal holding tank. The salt tank is used to regenerate the column. Resin in an ion exchange column initially is loaded with sodium ions. When sanitary water passes through the resin, these sodium ions will have an affinity for, and will extract calcium and magnesium. When the resin becomes saturated with resin, a concentrated sodium chloride solution is passed through the column. Engineering controls (lock and tag of control valves) have been established that will result in a concentration of not more than 9% sodium chloride in this discharge stream. Concentration variability will not be discussed further because the implementation of this administrative control which renders this stream "nonregulated."

4.1.1.2 Cooling Water. Cooling water is used to cool pump bearings and the faces of the boilers during boiler operation. The cooling water does not come into contact with any dangerous or regulated materials. Because no products with dangerous or regulated constituents are introduced to this stream the effluent from the stream is considered nonregulated.

4.1.1.3 Floor Drains. Numerous floor drains are located throughout the facility. Sources of liquid waste to these drains include safety showers, sanitary water, and steam condensate. It is not anticipated that any of these three sources will be an entering point for a potentially regulated waste; however, at least one of these floor drains can be the point through which a regulated waste could enter this waste stream. For example, a break in a feed line, or oil leak from a pump. At this point, a listed waste could be introduced to this discharge stream. To minimize this potential the pump wells (sumps) have been plugged. In addition, plugs have been installed in all floor drains within 1.5 m (5 ft) of any pump to provide additional engineering controls.

4.1.1.4 Boiler Blowdown. During the production of steam, minerals not removed in the water softener collect in the boiler. The boiler blowdown is used to bleed off these minerals. Two blowdown operations are performed, continuous and mud drum. The continuous blowdown is ongoing anytime a boiler is in operation. The mud-drum blowdown is for minerals that accumulate in the mud drum and is performed once per shift. Boiler blowdown effluent stream contains antiscaling and oxygen scavenging compounds that are added to the water. These chemicals are added to maintain efficient boiler operation by minimizing scale formation and corrosion of the boiler tubes. At the current

time, Dearborn*66 (an oxygen scavenger) is not considered a regulated waste. The concentration at which Deartrol* 4812 (a corrosion and scale prevention) is used, [i.e., 76 L (20 gal) of product to 1,072 L (282 gal) of water], yields a 7%, nonregulated solution.

4.1.2 Air Emissions

4.1.2.1 Bag house and Stacks. Flue gas from the boilers is normally routed through the bag houses to remove soot and fly ash. Flue gas from any boiler or any combination of boilers can be directed through ducting and dampers to any or all bag houses and then to either or both stacks. The bags are periodically shaken to remove ash and soot buildup. The ash and soot are then removed from collection hoppers by use of the hydrovac system and sent to the sluice pile.

The air emissions from the stacks and bag house are regulated under the authority of the *Clean Air Act of 1977*. The EPA established the National Ambient Air Quality Standard to protect the public health (primary standards) and the public welfare (secondary standards).

When differences appear in the regulations (e.g., federal, state or local) concerning air emission standards from fossil fuel boilers, S&WU shall use the more stringent regulation.

4.1.3 Routine Operating Conditions

4.1.3.1 Liquid Effluents. Although potential sources of hazardous materials are possible within the routine operation of the Power Plant, S&WU procedures, engineering controls (e.g., exhaust, ventilation, surveillance, and lock and tag) are used to prevent discharges to the environment. Control of fugitive emissions of vapors or fumes (e.g., spills, or use of aerosols), from hazardous materials/substances and fugitive dust are limited at best by the nature of the steam producing activities in the power plant. Protection of employees is provided by use of respiratory protection, exhaust, and ventilation systems and through the utilization of high-efficiency particulate air (HEPA) filters when required. Through these controls the hazards to personal are greatly minimized. In addition, when activities occur that require handling, transporting, packaging, removing (i.e., clean-up of spills) the principles of ALARA are practiced at all times.

Although the solid waste generated from the production of steam by use of fossil fuel meets the exclusion criteria in 40 CFR 261(4)(b)(6) (EPA 1989a) the S&WU through best management practices shall maintain engineering and procedural controls as outlined in WHC-CM-7-5 (WHC 1991a) to prevent the discharge of discarded and/or listed hazardous waste from entering the effluent discharge stream.

---

*Dearborn and Deartrol are trademarks of W. R. Grace and Company.

4.1.3.2 Air Emission. The opacity monitors are instruments intended to provide continuous opacity measurements of smoke and dust emissions from commercial and small or medium sized industrial facilities. Typically, the type installed is used for controlling combustion of incinerators and fuel-oil fired boilers, and for monitoring emission control equipment (e.g., detection of leaks in bag house installations). During routine operating conditions the bag house filters provide for approximately 98.9% containment of particulate to the environment. The opacity meters and recorders are configured in accordance with WAC 173-400-120, "Monitoring and Special Report" (Ecology 1976). This WAC implements Title 40 CFR 51; Appendix P; Sections 3, 4, and 5 (EPA 1976) which are the EPA minimum emission monitoring requirements. Visible emissions are required to be below 20% opacity for 3 min in any hour (i.e., the 20% Opacity Rule). Regulation WAC 173-400-040(1) provides for an exception under certain circumstances. The 20% Opacity Rule can only be exceeded for blowing off soot or grate cleaning. During these operational functions the maximum bypass of 15 min per 8-h operating period is allowed. Reporting requirements for emissions are followed according to the requirements in Section 10 of this document.

4.1.4 Upset Operating Conditions

4.1.4.1 Liquid Emissions. Mercury is used in the instrumentation on the boiler control panels in the 284-W Power Plant. Storage of metallic (liquid) mercury is maintained in the 284-W Power Plant. Storage is required should loss of mercury in the instrumentation (e.g., level controllers, manometers) occur. Potential mercury loss in an instrument line is approximately 5.9 kg (13 lb). Further discussion on compliance status can be found in Section 14.0 of this document.

Several breaks in the underground lines leading from the brine pit to the power plant have occurred, resulting in spills regulated by Washington State. Reports to the Westinghouse Hanford Occurrence Notification Center (ONC) reflect less than 54 kg (120 lb) at any given occurrence. Overfilling the brine tanks have also occurred as the result of human error. Further discussion of the brine pits can be found in Section 14.0 of this document.

4.1.4.2 Air Emissions. Upset conditions for the Power Plant facilities that have the potential to generate airborne effluent releases from the power plant bag house can usually be attributed to the loss of instrument air. Flue gas from the boilers is normally routed through the bag houses to remove soot and fly ash from the flue gas. Flue gas from any boiler or any combination of boilers can be directed through ducting and dampers to any or all bag houses and to either or both stacks. The bags are periodically shaken to remove ash and soot build-up. The ash and soot are then removed from collection hoppers by use of the hydrovac system and sent to the sluice pile. Loss of instrument air results in the dampers closing and allowing release to the environment of flue gas and particulate. Manual by-pass of the bag house can also be accomplished to perform maintenance activities. The emissions resulting from either upset or planned release to the environment are covered under the Tri-Party Agreement (Ecology et al. 1991) and the *Clean Air Act of 1977*. Reporting requirements are followed per *Westinghouse Hanford Company Environmental Compliance Manual* (WHC 1991a).

This page intentionally left blank.

9 2 1 2 1 5 7 0 2 5 1

5.0 EFFLUENT POINT OF DISCHARGE DESCRIPTION

5.1 LIQUID EFFLUENT

The contributory liquid waste effluent streams from the 284-E and 284-W Power Plants are listed below:

a. Water softener regeneration solution
b. Cooling water
c. Boiler blowdown
d. Floor drains.

The primary liquid effluent pathway under normal and upset conditions is the facility drain system. Effluent from the boiler through blowdown, cooling water, and softener regeneration is discharged to the floor trench or directly into floor drains. The liquid effluents of the 200-E facility discharges to the 216 B-3 pond in the 200-E Area, whereas the 200-W facility discharges to the 284-WB pond (west power plant pond) in the 200-W Area. Floor drains and open floor trenches are located throughout the facility that discharge to the identified ponds or sluice pit. Both effluent streams are transported via vitrified clay piping. Disposal of the liquid effluent is by evaporation and absorption into the soil. Figures 5-1 and 5-2 indicate the sources that produce this effluent stream in 284-E and 284-W Area Power Plants. In addition, water from steam condensate and miscellaneous drainage in No. 2 pit, reclaiming pit, and track hopper pit, located near the coal shack, is removed via steam jet to an open pit adjacent to the coal unloading area. In both power plants sluicing of the ash from the boilers is performed and discharged to the fly ash slurry pit, located outside of the facility. Disposal of the liquid effluent is by evaporation and absorption into the soil.

5.2 AIR EMISSIONS

The 284-E and 284-W Power Plants exhaust flue gases and particulate through the stacks to the atmosphere during an upset conditions or planned by-passes of the bag house. Under normal operating conditions the bag house collects the particulate, which is then diverted to sluicing operations. Fly ash is slurred and discharged to the liquid effluent and then to the ash pit. The disposal of the liquid effluent is through evaporation and absorption into the soil.

9 2 1 2 3 6 7 0 2 5 2

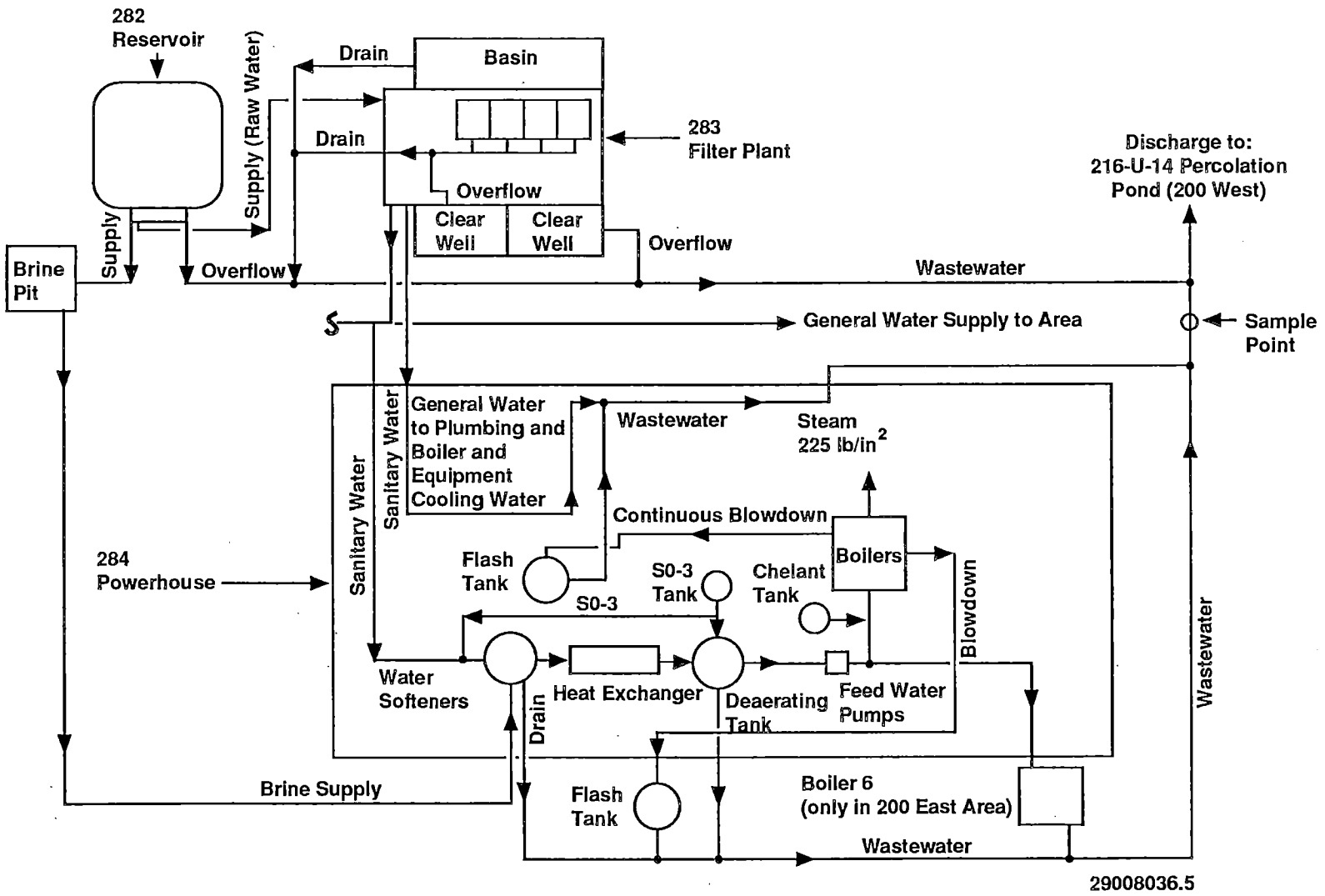

Figure 5-1. 284-W Power Plant Flow Schematic.

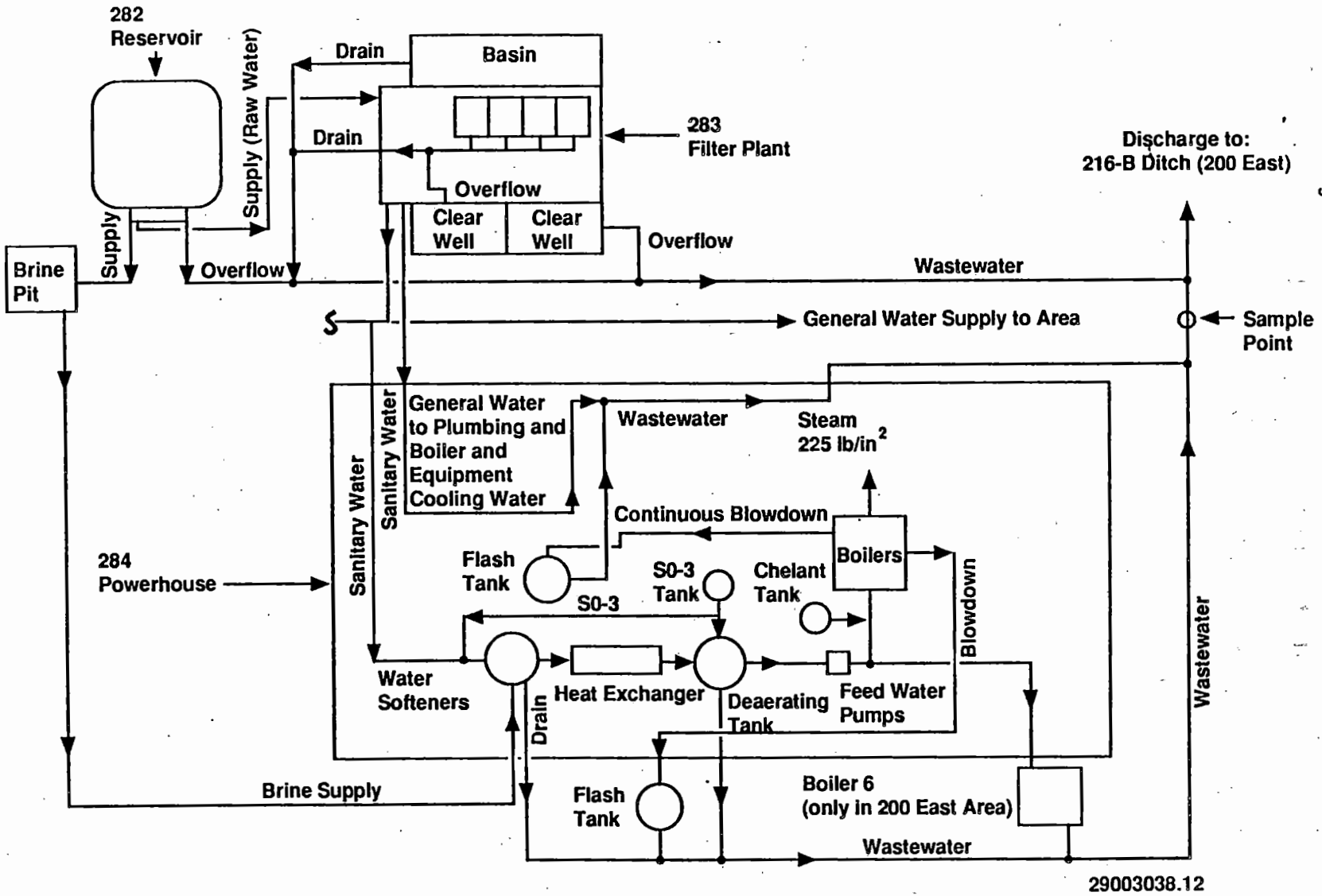

Figure 5-2. 284-E Power Plant Flow Schematic.

This page intentionally left blank.

9 2 1 2 1 6 7 0 2 5 5

6.0 EFFLUENT MONITORING/SAMPLING SYSTEM DESIGN CRITERIA

At the present, the ability to monitor air emissions from the power plants is limited to the opacity monitor. The monitor is an instrument intended to provide continuous measurements of smoke and dust emissions from commercial and small or medium sized industrial facilities. Typically, the monitor is used for combustion control of incinerators and fuel-oil fired boilers, and for the monitoring of emission control equipment (e.g., detection of leaks in bag house installations). The capability of effluent monitoring or sampling. The monitor performance characteristics and installation data are summarized in Table 6-1.

9 2 1 2 3 5 7 0 2 5 6

Table 6-1. Opacity Monitor Performance Characteristics.

Accuracy	Opacity measurements are provided with a maximum error of ±5% of full scale, or ±2.5% maximum opacity error are zero opacity. This error includes the effects of: • Voltage fluctuations within ±10% of nominal • Ambient temperature variations from -184 °C (-300 °F) to +65 °C (+150 °F) • Alignment variations within ±1.5° of the optical axis • Measurement scale nonlinearity • Zero drift over an operational period of 1 month* • Span drift over an operational period of 1 month* • Soiling drift over an operational period of 1 month* *The operational period is the normal period of maintenance-free operation which can be expected in typical applications.
Measurement Range	Single range provides 0% to 100% opacity (or transmittance) indication. Optical density measurement units are not available on the monitor. Opacity output is linear with respect to double-pass opacity and non-linear with respect to single-pass opacity. Option 1 includes a second range of 0-50% double pass or 0-30% single pass.
Calibration	Easy, manual, zero and span calibration checks without disassembling or removing the instrument from the stack. Weatherproof enclosure attached to transceiver unit provides self-contained storage space for zero calibration reflector. Option 1 provides a remote zero adjustment.
Spectral Response*	Essentially photopic (visible light); maximum response at 580 namometers.
Angle of Projection*	±1.8° from the optical axis [approximately 20-cm (8-in.)-dia. circle at 3 m (10 ft)].
Angle of View*	±2.4° from the optical axis (approximately 28-cm (11 in.)-dia. circle at 3 m (10 ft)].
Response Time*	One second is standard, others available on special request.
Electrical Output	Linear with double-pass opacity (or transmittance); adjustable for 0 to 20 ma or 4 to 20 Maximum compliance* is 9 V. Special chart paper is available with a non-linear scale corresponding to equivalent, single-pass, opacity measurement values.
Control and Indicators	Instrument includes stack-mounted junction box with measurement indicator and fuse. Optional control-room panel includes an opacity indicator, fuse, manual reset switch, time-delayed adjustable alarm, remote zero, and dual-range switch.

Table 6-1. Opacity Monitor Performance Characteristics.

Alarm-Level Detection	Built-in alarm-level detector with adjustable level. Normally open contacts rated at 110 V and 1A maximum.
Light Source	Tungsten, incandescent; 20,000 h expected life.

This page intentionally left blank.

9 2 1 2 1 7 0 2 5 9

7.0 CHARACTERIZATION OF CURRENT ENVIRONMENTAL MONITORING SYSTEM

7.1 AIR EMISSIONS

Opacity meters are calibrated on a regular basis to ensure operation in accordance with the following sections of WHC-CM-8-2 (WHC 1991e), Level III, 200 Area Support Services Manual.

- **Section 201**--This procedure provides an index of 200 Areas calibration procedures, and the index is updated quarterly and shall be maintained and controlled in accordance with WHC-CM-8-2, Section 102.1, "Document Control."

- **Section 202**--Establishes the administrative requirements for the Plant Instrumentation Surveillance, Calibration, and Evaluation System.

The program utilizes a computerized database to document and forecast plant installed instrument and equipment calibrations and verifications. The S&WU has adopted a policy of a annual bag house efficiency test. See Sections 8.0 and 14.0 of this document for further discussion. This test is performed by Hanford Environmental Health Foundation (HEHF) to generate statistics that will show how much particulate the power plants have discharged over the years.

7.2 INSTRUMENTATION DESCRIPTION

7.2.1 Air Emissions

7.2.1.1 Controls and instrumentation. Bag houses have a control panel that contains all the controls, indicators, instruments, and recorders necessary for proper operation of the bag house. This panel is located on the second floor (firing isle) of the power plant. Various annunciators are installed to alarm (flashing lights and a buzzer), of malfunctions or dangerous levels for the following functions:

- Hopper high ash level
- High inlet gas temperature
- Low inlet gas temperature
- High outlet gas temperature
- Low outlet gas temperature
- High pressure differential
- Low pressure differential
- High Opacity
- High compartment ash level
- High inlet plenum draft
- Low inlet plenum draft
- Reverse air damper/flue gas damper--open
- Bypass damper--open with increased demand
- Trouble with the 13.8 KVA, 480 V transformer.

The alarm system is designed to provide early warning of possible bag house problems that could result in a bypass of the bag house to the atmosphere.

7.2.2 Liquid Effluents

At the present, there are no monitoring capabilities or equipment installed within the plant itself that provide information necessary to determine the effluent discharge at the 284-E Power Plant. At the time the power house facilities were built, flow monitors for effluent discharges were not required as part of the design. Regulations pertaining to environmental issues that would require this information were not established during the 1940's when the plants were constructed. Currently, an evaluation on BAT is being prepared in response to the Tri-Party Agreement and to address monitoring requirements established by the EPA.

A flow monitor outside of the 284-W Power Plant indicates the combination flow of the liquid effluent from the power plant and filter plant. Additional discussion of sampling, which has been performed for characterization of the liquid effluent stream, can be found in Section 8.0 of this document.

7.3 TECHNICAL SPECIFICATIONS PERTAINING TO ENVIRONMENTAL MONITORING SYSTEM

The 284-E and 284-W Power Plant boilers are vintage (1945 and 1954) such that state of the art instrumentation is not available. The boilers are operated and comply with the requirements as set forth within the industry by the *American Society of Mechanical Engineers Boiler and Pressure Vessel Code* (ASME 1989) and manufacture's recommendation. This ensures safe and efficient boiler operations.

Calibration of the instrumentation and apparatus associated with the boiler controls are in compliance with the American National Standards Institute *Performance Test Codes*, ANSI/ASME PTC 19.10-1981, Part 10, "Flue and Exhaust Gas Analysis, Instruments and Apparatus (ASNI/ASME 1981)."

8.0 HISTORICAL MONITORING/SAMPLING DATA FOR EFFLUENT STREAMS

Analysis was performed in 1985 by HEHF to determine whether or not the ash from the power plant exhibited the DW characteristics of Environmental Protection (EP) toxicity. In accordance with WAC 173-303 (Ecology 1989a), samples were extracted for 24 h with dilute acetic acid at a pH greater than 5.0 or less than 0.2. The resulting aqueous extracts were analyzed for the eight heavy metals listed in Table 8-1, using atomic absorption flame emission spectroscopy. All sample extract metal concentrations found were well below the minimum extract concentrations required for designation as EP toxic material. The results (Table 8-1) indicated that these sample would not be classified as DW based on the characteristic of EP toxicity.

In 1986, Pacific Northwest Laboratory (PNL) was contracted to conduct an ash analysis. Analyses were taken from the Bag house No. 1, Bag house No. 2, No. 2 boiler walls of the firebox, and the 200-E Area ash pit for the 284-E Power Plant. An analysis from Bag house No. 1 in the 284-W Power Plant was also taken. Table 8-2, shows the results of the sampling program.

In July and August of 1989, source testing was conducted by the HEHF to measure emissions from steam boilers in the 284-E and 284-W Power Plants. Emission testing included sampling for particulate, sulfur dioxide (SO_2), and collecting a series of instantaneous grab samples for oxides of nitrogen (NO_x). The source testing determined if power plant emission control devices were effective in controlling emissions under average boiler operating conditions. Table 8-3 shows the emission results for 284-W Power Plants and Table 8-4 shows the emission results for 284-E Power Plants.

Estimates of the Impacts of 200E/200W Power Plants on Particulate Ambient Air Quality was prepared for DOE under Contract DE-AC06-76RLO 1830 by PNL, to determine emission of particulate from the stacks. The conclusion of the report was that the 200-E and 200-W Power Plants were well below the allowable particulate emissions standards.

Table 8-1. Liquid Effluent and Emissions from the Power House Stack.

Contaminant	Concentration of extract (mg/L)						DW Minimum extract concentration (mg/L)
	E23-51	E23-52	E23-53	W14-64	W14-65	W14-66	
Arsenic	<0.2	<0.2	<0.2	<0.2	<0.2	<0.2	5
Barium	3.2	2.8	2.9	2.4	4.3	1.8	100
Cadmium	<0.05	<0.05	<0.05	<0.05	<0.05	<0.05	1
Chromium	<0.05	<0.05	<0.05	<0.05	<0.05	<0.05	5
Lead	<0.1	<0.1	<0.1	<0.1	<0.1	<0.1	5
Mercury	<0.001	<0.001	<0.001	<0.001	<0.001	<0.001	0.2
Selenium	<0.1	<0.1	<0.1	<0.1	<0.1	<0.1	1
Silver	0.01	<0.01	0.01	0.01	0.02	0.01	5

Table 8-2. Ash Analyses.

Sample parameter*	Soluble components				
	284-W Bag house 1 Mod 2	284-E No. 2 Boiler Walls of Firebox	284-E Bag house 1 Mod 5	284-E Bag house 2 Mod 5	Ash Pit 200-E
Chloride	124	576	25	78	13
Nitrite	18	57	7	167	--
Phosphate	29	--	31	115	~25
Nitrate	4	--	--	--	--
Sulfate	1,270	260	47	3,330	230
Oxalate	37	--	--	--	--
Carbon	0.1%	0.14%	0.009%	est 80-90%	--
Aluminum	7,080	3,000	5,700	4,650	1,400
Calcium	8,480	9,400	12,000	4,750	2,500
Iron	730	5,000	370	850	930
Silicon	4,600	2,000	3,200	2,400	560
Phosphorus	1,500	1,100	3,200	480	880
Misc	1,000	2,000	1,500	1,500	900

*Except as noted, all values are ppm in solid. (0.1 wt.% = 1,000 ppm)

Table 8-3. Source Testing Emission Results, 284-W Power House, 200-W Area (August 10, 1989).

Parameter	Run 1	Run 2	Run 3
Time of sample	12:14-13:41	14:37-15:54	16:32-17:45
Average stack gas temperature °C (°F)	68.3 (155)	66.6 (152)	73.3 (164)
Percent O_2 in stack gas	18.5	18.5	18.0
Percent CO_2 in stack gas	1.4	1.8	2.0
Percent H_2O in stack gas	1.7	1.0	1.5
Average stack gas velocity m (ft)/s	5.5 (18.2)	5.4 (17.7)	5.2 (17.2)
Average volumetric flow rate ($dstdft^3/h$)	3.3 E+06	3.25 E+06	3.09 E+06
Volume stack gas sampled ($dstdft^3$)	45.39	43.21	41.85
Particulate grain loading (grains/$dstdft^3$ at 7% O_2)	<0.001	0.005	<0.001
Percent isokinetic	109.4	106.0	107.9
Average sulfur dioxide (ppm at 7% O_2)	748	812	714
Average NO_x (ppm)	435	453	464

Table 8-4. Source Testing Emission Results, 284-E Power House, 200-E Area (July 27, 1990).

Parameter	Run 1	Run 2	Run 3
Time of sample	10:18-11:22	12:09-13:12	14:11-15:16
Average stack gas temperature °C (°F)	85.0 (185)	85.0 (185)	93.3 (200)
Percent O_2 in stack gas	18.6	18.8	15.8
Percent CO_2 in stack gas	2.4	2.8	3.2
Percent H_2O in stack gas	1.8	1.2	1.4
Average stack gas velocity m (ft)/s	5.2 (17.2)	6.4 (20.9)	4.6 (15.1)
Average volumetric flow rate ($dstdft^3/h$)	4.48 E+06	5.49 E+06	3.86 E+06
Volume stack gas sampled ($dstdft^3$)	38.43	46.36	33.91
Particulate grain loading grains/$dstdft^3$ at 7% O_2	0.017	0.008	0.010
Percent isokinetic	102.9	101.5	105.8
Average sulfur dioxide (ppm at 7% O_2)	928	908	346
Average NO_x (ppm)	407	449	428

9.0 SAMPLE ANALYSIS

On May 23, 1991, samples were taken of the ash disposal pits to ensure that the fly ash slurry discharge stream was within regulatory limits. Twelve samples were extracted comprising of liquid and solid soil examples. The samples were taken through the Office of Sample Management (OSM) according to the RCRA protocols established by SW-846, *Test Methods for Evaluating Solid Waste: Physical/Chemical Methods* (EPA 1986). It is expected that the analytical results will be returned to Westinghouse Hanford by January 1992. The samples were analyzed for volatiles, semi-volatiles, total characterization leaching procedure metals, alkalinity, anions, and pH.

9.1 U.S. DEPARTMENT OF ENERGY ANALYTICAL AND LABORATORY GUIDELINES

The S&WU shall use the analytical laboratories that are approved by Westinghouse Hanford through the OSM meeting the compliance of SW-846 of the EPA.

The analytical and laboratory procedures for the FEMP activities are identified in the *Quality Assurance Project Plan for the Facility Effluent Monitoring Plan Activities* (WHC 1991f). General requirements for laboratory procedures, data analyses, and statistical treatment are addressed in the QAPP (Tables 9-1 and 9-2). Detailed descriptions of these requirements are given in each FEMP.

The following elements are identified in *Environmental Regulatory Guide for Radiological Effluent Monitoring and Environmental Surveillance* (DOE 1991).

9.2 SAMPLE AND DATA CHAIN OF CUSTODY

The primary objective of the chain of custody is to create an accurate written record that is used to trace possession and handling of the sample from the moment of its collection through analysis. Proper documentation and control ensures that all documents for a specific project are accounted for when the project is completed. The chain of custody is one of many documents required by SW-846 (EPA 1986).

The OSM provides the administrative control of samples from the time taken to disposition. The OSM provides this oversight for Westinghouse Hanford through the implementation of *Office of Sample Management Administrative Manual*, WHC-CM-5-3 (WHC 1991g), which covers the procedures used to perform this function. Samples that are collected and tracked through a work order system with the OSM shall comply with SW-846 and WHC-CM-7-7, *Environmental Investigations and Site Characterization Manual* (WHC 1991h). The S&WU shall maintain copies of all data taken during a sampling program provided by a contractor or OSM to ensure that regulatory compliance is maintained.

Table 9-1. Laboratory Procedures.

Element	Documentation
Sample identification system	To be provided when complete
Procedures preventing crosscontamination	Contained in 222-S Laboratory Analytical Procedures (identified in QAPP WHC-EP-0446 Table 8-1)
Documentation of methods	Contained in 222-S Laboratory Analytical Procedures (identified in QAPP WHC-EP-0446 Table 8-1)
Gamma emitting radionuclides	See QAPP Table 8-1
Calibration	See QAPP Table B-1
Handling of samples	See QAPP Table 8-1
Analysis method and capabilities	See QAPP Table 8-1
Gross alpha, beta, and gamma measurements	See QAPP Table 8-1
Direct gamma-ray spectrometry	See QAPP Table 8-1
Beta counters	See QAPP Table 8-1
Alpha-energy analysis	See QAPP Table 8-1
Radiochemical separation procedures	To be provided when available
Reporting of results	To be provided when available
Counter calibration	See Table B-1, QAPP
Intercalibration of equipment and procedures	To be provided when available
Counter background	Contained in 222-S Laboratory Analytical Procedures (QAPP, Table 8-1)
Quality assurance	To be provided when available

Table 9-2. Data Analyses and Statistical Treatment.

Element	Documentation
Summary of data and statistical treatment requirements	To be provided when available
Variability of effluent and environmental data	To be provided when available
Summarization of data and testing for outliers	To be provided when available
Treatment of significant figures	To be provided when available
Parent-decay product relationships	To be provided when available
Comparisons to regulatory or administrative control standards and control data	To be provided when available
Quality assurance	To be provided when available

Samples performed by S&WU personnel shall utilize "Chain-of-Custody" Procedure SWU2-A-020 (WHC 1991i). Sampling will be performed according to the Sample Analysis Plans (SAP). The SAPs are in the process of being prepared pursuant to the Tri-Party Agreement (Ecology et al. 1991) and will be available for review.

This page intentionally left blank.

9 2 1 2 1 1 7 0 9 5 9

10.0 NOTIFICATIONS AND REPORTING REQUIREMENTS

The DOE Orders 5400.1, Chapter II (DOE 1988); 5000.3A (DOE 1990b); and others require notification and reporting of specific events related to effluents. These requirements notify DOE and other impacted groups of environmental occurrences and provide for routine reporting of environmental protection information. The policies and procedures that provide notification and reporting requirements are provided in WHC-CM-1-3, *Managements Requirements and Procedures*, MRP 5.14 (WHC 1990a).

The basic requirements for event notification and reporting to non-DOE federal agencies pertaining to radioactive and hazardous substances are provided in 40 CFR 61.10 and 40 CFR 302, respectively (EPA 1989c, 1989b). The notification and reporting requirements for DWs are provided in WAC, Chapter 173-303 (Ecology 1989). Also, federal, state, and/or local facility discharge permits may contain additional notification and reporting requirements.

The RL currently requires contractors to make reports and notifications on environmental occurrences and routine monitoring results.

10.1 ENVIRONMENTAL OCCURRENCE

For an environmental occurrence, the affected facility management will notify the area specific manager of the environmental protection function within the responsible contractor. Notification will be made via the established communication links that are specified in WHC-CM-1-1 (WHC 1991d). Line management, in conjunction with environmental protection personnel, will provide prompt categorization of the event and notification to the Hanford Site ONC. The ONC will in turn notify the appropriate RL management. The contractor environmental protection management will also notify the Environmental Oversight Branch of the RL when categorization of an event is complete. Notification and response procedures related to effluent monitoring and sampling should be referenced in this section.

10.2 PERIODIC ROUTINE EFFLUENT MONITORING REPORTS

On a periodic basis, effluent monitoring data are gathered by the Hanford Site contractors on all RL facilities for compilation. The environmental protection function within Westinghouse Hanford reports to EG&G Idaho annually on the radioactive effluent and onsite discharges from Westinghouse Hanford facilities.

This page intentionally left blank.

9212170371

11.0 INTERFACE WITH THE OPERATIONAL ENVIRONMENTAL SURVEILLANCE PROGRAM

11. 1 DESCRIPTION

The sitewide Environmental Monitoring Plan (EMP), as described in WHC-EP-0491 (WHC 1991j), consists of two distinct but related components: environmental surveillance conducted by PNL and effluent monitoring conducted by Westinghouse Hanford. The responsibilities for these two portions of the EMP are delineated in a Memorandum of Understanding (PNL/WHC 1989). Environmental surveillance, conducted by PNL, consists of surveillance of all environmental parameters to demonstrate compliance with regulations. Effluent monitoring includes both in-line and facility effluent monitoring as well as near-field (near-facility) environmental monitoring. Projected EDEs, reported in this FEMP, are the products of in-line effluent monitoring. Near-field monitoring is required by Part O, "Environmental Monitoring," *Environmental Compliance Manual* (WHC 1991a), and procedures are described in *Operational Environmental Monitoring* (WHC 1988a).

11.2 PURPOSE

The purpose of near-field monitoring is to determine the effectiveness of environmental controls in preventing unplanned spread of contamination from facilities and sites operated by Westinghouse Hanford for DOE. Effluent monitoring and reporting, monitoring of surplus and waste management units, and monitoring near-field environmental media are, therefore, conducted by Westinghouse Hanford for the purposes of: controlling operations, determining the effectiveness of facility effluent controls, measuring the adequacy of containment at waste transportation and disposal units, detecting and monitoring upset conditions, and evaluating and upgrading effluent monitoring capabilities.

11.3 BASIS

Near-field environmental surveillance is conducted to (1) monitor employee protection; (2) monitor environmental protection; and (3) ensure compliance with local, state, and federal regulations. Compliance with parts of DOE Orders 5400.1, *General Environmental Protection Program* (DOE 1988a); 5400.5, *Radiation Protection of the Public and the Environment* (DOE 1990a); 5484.1, *Protection, Safety, and Health Protection Information Reporting System* (DOE 1981); 5820.2A, *Radioactive Waste Management* (DOE 1988b); and DOE/EH-0173T, *Environmental Regulatory Guide for Radiological Effluent Monitoring and Environmental Surveillance* (DOE 1991), are addressed through this activity.

11.4 MEDIA SAMPLED AND ANALYSES PERFORMED

Procedure protocols for sampling, analysis, data handling, and reporting are specified in WHC-CM-7-4 (WHC 1988a). Media include ambient air, surface water, groundwater, external radiation dose, soil, sediment, vegetation, and animals at or near active and inactive facilities and/or waste sites.

Parameters monitored include the following, as needed: pH, water temperature, radionuclides, radiation exposure, and hazardous constituents. Animals that are not contaminated, as determined by a field instrument survey, are released at the capture location.

11.5 LOCATIONS

Samples are collected from known or suspected effluent pathways (e.g., downwind of potential releases, liquid streams, or proximal to release points). To avoid duplication, Westinghouse Hanford relies upon existing sample locations where PNL has previously established sample sites (e.g., air samplers in the 300 Area). There are 38 air samplers (4 in the 100 Area and 34 in the 200/600 Areas), 35 surface water sample sites (22 in the 100 Area and 13 in the 200/600 Areas), 110 groundwater monitoring wells (20 in the 100 Area, 89 in the 200/600 Areas, and 1 in the 300/400 Areas), 299 external radiation monitor points (182 survey points and 41 TLD sites in the 100 Area, 61 TLD sites in the 200/600 Areas, and 15 TLD sites in the 300/400 Areas), 157 soil sample sites (32 in the 100 Area, 110 in the 200/600 Areas, and 15 in the 300/400 Areas), and 95 vegetation sample sites (40 in the 100 Area, 40 in the 200/600 Areas, and 15 in the 300/400 Areas). Animal samples are collected at or near facilities and/or waste sites. Specific locations of sample sites are found in WHC-CM-7-4 (WHC 1988a).

Additionally, surveys to detect surface radiological contamination, scheduled in WHC-CM-7-4, are conducted near and on liquid waste disposal sites (e.g., cribs, trenches, drains, retention basin perimeters, pond perimeters, and ditch banks), solid waste disposal sites (e.g., burial grounds and trenches), unplanned release sites, tank farm perimeters, stabilized waste disposal sites, roads, and firebreaks in the Operations Areas. There are 391 sites in the Operations Areas (100 in the 100 Area, 273 in the 200/600 Areas, and 18 in the 300/400 Areas) where radiological surveys are conducted.

11.6 PROGRAM REVIEW

The near-field monitoring program will be reviewed at least annually to determine that the appropriate effluents are being monitored and that the monitor locations are in position to best determine potential releases.

11.7 SAMPLER DESIGN

Sampler design (e.g., air monitors) will be reviewed at least biannually to determine equipment efficiency and compliance with current EPA and industry (e.g., American National Standards Institute and American Society for Testing and Materials) standards.

11.8 COMMUNICATION

The operations and engineering contractor and the research and development contractor will compare and communicate results of their respective monitoring programs at least quarterly and as soon as possible under upset conditions.

11.9 REPORTS

Results of the near-field environmental monitoring program are published in the document series Westinghouse Hanford Company Environmental Surveillance Annual Report (WHC 1988b). The radionuclide values in these reports are expressed in curies, or portions thereof, for each radionuclide per unit weight of sample (e.g., picocuries per gram) or in field instrument values (e.g., counts per minute) rather than EDE, which is calculated as the summation of the products of the dose equivalent received by specified tissues of the body and a tissue-specific weighting factor.

9 2 1 2 7 4 6 7 0 2 7 4

This page intentionally left blank.

9 2 1 2 1 1 7 0 2 7 5

12.0 QUALITY ASSURANCE

Quality assurance (QA) is important to every sampling and analysis project. The QA data is used to convince the analyst that the analyses were carried out correctly and defend the analytical results. Each QA test as required by WHC-EP-0446, *Quality Assurance Project Plan* (WHC 1991f) provides specific information for the contractual quantitation limit and quality of the data. The actual test run depends upon the project requirements and the way in which the analytical data is to be used. These components of the QA program will help produce data of known quality throughout the sampling and analysis process.

12.1 INTERNAL QUALITY CONTROL

Internal quality control (QC) consists of collecting and/or analyzing a series of duplicate, blank, and spike samples to ensure that the analytical results are within the quality control limits specified for the QA/QC program. Laboratory QC samples are documented at the bench and reported with analytical results. The QC sample results are interpreted to quantify bias, precision, and accuracy; and calculate limits of detection and quantitation for analytical results. Field QA samples will be documented in field logbooks and submitted as blind samples to the laboratory when appropriate.

Analytical samples shall be subject to in-process QC measures in both the field and laboratory. Unless superseded by specific directions provided in S&WU procedures, the minimum field QC requirements shall apply as adapted from SW-846 (EPA 1986) as modified by the proposed rule changes included in the Federal Register, Volume 54, No. 13 (EPA 1989b).

9 2 1 2 3 5 7 0 2 7 6

This page intentionally left blank.

9 2 1 2 3 6 7 0 2 7 7

13.0 INTERNAL AND EXTERNAL PLAN REVIEW

The DOE Order 5400.1, *General Environmental Protection Program*, Chapter IV (DOE 1988), requires the FEMP to be reviewed annually and updated every 3 yr. The FEMP should be reviewed and updated as necessary after each major change or modification in the facility processes, structure, ventilation and liquid collection systems, monitoring equipment, waste treatment; or significant change to the Safety Analysis Reports. Operations management shall maintain records of reports on measurements of stack particulate or other nonradioactive hazardous pollutant emissions for 5 yr.

Facility management is to obtain the environmental protection functions's approval for all changes to the FEMPS, including those generated in the annual review and update.

The Westinghouse Hanford Environmental Protection prepares an annual effluent discharges report for each area on the Hanford Site to cover both airborne and liquid release pathways. In addition, a report on the air emissions and compliance to NESHAPs is prepared by Environmental Protection and submitted to EPA and DOE.

This page intentionally left blank.

14.0 COMPLIANCE ASSESSMENT

14.1 LIQUID EMISSIONS

14.1.1 Mercury Instruments

Evaluation of the control panels indicated that replacement should be a high priority. Documentation of mercury spills reported to ONC have not exceeded RQ of .45 kg (1 lb). In June 1990, a mercury spill occurred on the steam riser impulse line on the No. 3 boiler control panel. An Event Fact Sheet SWU-90-014 (WHC 1990b) was initiated per the spill reporting requirements in WHC-CM-7-4 (WHC 1988a). The amount of the spill was determined to be minimal. The HEHF estimated the spill totalled 10-20 cm^4 within a 2.8 m^2 (30 ft^2) floor surface and 37 cm^2 (4 ft^2) of boiler surfaces. As a result of this spill, a chemical specific emergency response procedure (Mercury) SWU2-A-013 (WHC 1990c) was implemented in 1990 to ensure safety to personal and the environment.

Employee air monitoring was performed by the HEHF in June 1990 to assess worker exposure to mercury vapor during cleanup of the elemental mercury and to provide baseline information for future mercury spill cleanup activities. A mercury vapor analyzer, factory calibrated on May 9, 1990, was used to monitor workers' breathing zone mercury vapor concentrations throughout the cleanup process. The mercury vapor levels encountered in the workers' breathing zone during this cleanup activity were well below the applicable exposure limit of 0.05 mg/m^3 (HEHF 1990). In March, 1991 another mercury spill occurred in the boiler control panel from the No. 1 Boiler steam flow detector. Occurrence Report WHC-91-0195-RO (WHC 1991k) was initiated per WHC-CM-7-5 (WHC 1991b). It was determined that 4 hg (.9 lbs) of mercury was spilled from the detector. The HEHF performed a surveillance of the cleanup area before the work area was approved for continued use. All ambient air mercury concentrations were less than the PEL/TLV (permissible exposure limit/ threshold limit value) of 0.05 mg/m^3. Airborne mercury vapor concentrations were measured on March 8, 1991, with the Bacharach (Model MV-2) J-W Mercury Vapor Sniffer* (factory calibrated on June 22, 1990). Monitoring was performed within a restricted area established following the spill (HEHF 1991).

In 1990 the environment (ground) around the brine pit and leading into the power plants were entered into the Waste Information Data System program for future remedial actions per WHC-CM-7-5.

On December 29, 1990, WAC 173-360 (Ecology 1990a) underground storage tank (UST) regulations became effective. Before the state regulations became effective, UST systems were regulated under 40 CFR 280 and 281 (EPA 1988a,b). Because the brine tanks contain a Washington State-only regulated substance, they were exempt from federal regulations. Because they were field constructed UST the brine tanks fall into the deferred category under the state UST regulations.

---

*Bacharach J-W Mercury Vapor Sniffer is a trademark of Bacharach, Inc.

The major impact of the state regulations effective July 1, 1991, is that the UST systems will require a valid permit from the Ecology. The Hanford Surplus Facilities Program has provided the proper notifications to obtain tank permits from RL for submission to the Ecology as required by WAC 173-360-130, "Tank Permits and Delivery of Regulated Substances" (Ecology 1990a). The necessary permits have been issued by Ecology.

In addition to the permit requirement, the UST systems are subject to the following sections of WAC 173-360, "Investigation and Access" (360-140), "Enforcement" (360-160), "Penalties" (360-170), "Annual Tank Fees" (360-190), "Notification Requirements" (360-200), "Reporting of Confirmed Releases" (360-372), and "Permanent Closure and Change in Service" (360-385).

The S&WU facilities through operation and maintenance of the power plant use, generate and dispose of or manage regulated substances. Sampling shall be provided when a chemical has a potential to exceed 10% of its equivalent concentration percent for the stream mixture as in WAC 173-303-300 (Ecology 1989a). The Dangerous Waste generated at the S&WU power plant is managed in compliance with applicable EPA and Washington State Dangerous Waste regulations according to WAC 173-303-070. (Refer to Section 3.0 of this document).

14.2 AIR EMISSIONS

Particulate and flue gases from the bag house or stacks meet the regulatory requirements as established by the *Clean-Air Act of 1977* and the APCA. No power house stacks exceed the 0.1 mrem/yr EPA threshold limit at the point of discharge. Environmental Protection documented the results of the offsite dose calculations for the registered stacks in WHC-EP-0498, *Unit Dose Calculation Methods and Summary of Facility Effluent Monitoring Plan Determinations* (WHC 1991l). For 1989-1990, no established limits in the Benton-Franklin-Walla Walla Counties regulations were exceeded.

There are no apparent state or federal statutes for fossil fuel fired boilers that require the monitoring of stack particulate emissions during an upset condition. As a Best Management Practice S&WU has adopted a policy of a annual bag house efficiency test. Test methods, analytical procedures, and calculations used for this test were in general accordance with EPA source test methods as specified in 40 CFR 60, *Environmental Protection Agency Regulations on Standards of Performance for New Stationary Sources*, (EPA 1991) and "General Regulation 80-7" of the Benton-Franklin-Walla Walla Counties Air Pollution Control Authority, Section 400-050 (APCA 1980). This test is performed by HEHF to generate statistics that will show how much particulate the power plants have discharged over the years. Past test results are shown in Section 8.0, Tables 8-3 and 8-4 of this document.

15.0 SUMMARY AND CONCLUSIONS

Monitoring requirements for nonradioactive liquid discharges are based on the need to verify knowledge of a DW (or lack thereof) before storing, treating, or disposing of regulated substances. Monitoring shall be provided when there is significant potential to exceed nonregulated limits. The power houses currently do not require specific monitoring for nonradioactive and radioactive liquid discharges because of the lack of potential source terms. However, monitoring of the liquid discharges at the point of release os being required by the BAT document in response to the Tri-Party Agreement.

Project W-049H will provide a collection, conveyance and disposal system for the 200 Areas. The need for treating the effluent streams from the 200-W Power House facilities will be determined from an evaluation of BAT in response to the Tri-Party Agreement at the source generation facility for each stream. The BAT for the 200-W Power House is scheduled for completion by February, 1992. The BAT for the 200-E Power House facilities is scheduled for completion by September, 1992.

The results of the BAT evaluations will be included in the engineering report for the collection and conveyance system to be submitted to Ecology for approval in the future. Project W-049H effluent will be disposed either to the ground or to the Columbia River. If the ground disposal alternative is selected, the preferred disposal site will be characterized in accordance with the requirements of WAC 173-216 (Ecology 1990b) and WAC 173-240 (Ecology 1990c). Project W-049H may provide retention and verification of the effluent quality before discharge. Retention may occur at the wastewater source facilities, or at downstream locations within the collection and conveyance system. Retention capabilities of Project W-049H, if deemed appropriate, will be described in the WAC 173-240 engineering report, which will be submitted to Ecology for approval. It is anticipated with the completion of the Project W-049H, continual monitoring will be implemented to ensure regulatory compliance.

The fly ash sluice pit for the power houses needs to be characterized to substantiate that there are no source terms requiring monitoring. It is scheduled for disposition during fiscal year 1993, consistent with the Tri-Party Agreement. Until the implementation of BAT, the 200-W Power House will continue to discharge the liquid streams to the 284W-B-Pond and the 200-E Power House liquid streams will continue to discharge to the 216-B-3-Pond.

This page intentionally left blank.

9212170383

16.0 ATTACHMENTS

16.1 REFERENCES

ASNI/ASME, 1981, *"Performance Test Codes*, "Flue and Gas Analysis, Instruments and Apparatus," ASNI/ASME PTC 19.10, Part 10, American National Standards Institute and American Society of Mechanical Engineers, New York, New York.

ASME, 1989, *American Society of Mechanical Engineers Boiler and Pressure Vessel Code*, The American Society of Mechanical Engineers, New York, New York.

APCA, 1980, *General Regulation 80-7 of the Benton-Franklin-Walla Walla Counties Air Pollution Control Authority* (APCA), Board of Directors of the Benton-Franklin-Walla Counties Air Pollution Control Authority, Richland, Washington.

Brown, M. J., et al., 1990, *Westinghouse Hanford Company Effluent Discharges and Solid Waste Management Report for Calendar Year 1989: 200/600 Areas*, WHC-EP-014102, Westinghouse Hanford Company, Richland, Washington.

Clean Air Act of 1977, as amended, 41 USC 7401.

Clean Water Act of 1977, as amended, 33 USC 1251.

Comprehensive Environmental Response, Compensation, and Liability Act of 1980, as amended, 41 USC 9601 et seq.

DOE, 1981, *Environmental Protection, Safety, and Health Protection Information Reporting Requirements*, DOE Order 5484.1, U.S. Department of Energy, Washington, D.C.

DOE, 1988a, *General Environmental Protection Program*, DOE Order 5400.1, U.S. Department of Energy, Washington, D.C.

DOE, 1988b, *Radioactive Waste Management*, DOE Order 5820.2A, U.S Department of Energy, Washington, D.C.

DOE, 1990a, *Radiation Protection of the Public and the Environment*, DOE Order 5400.5, U.S. Department of Energy, Washington, D.C.

DOE, 1990b, *Occurrence Reporting and Processing of Operations Information*, DOE Order 5000.3A, U.S. Department of Energy, Washington, D.C.

DOE, 1991, *Environmental Regulatory Guide for Radiological Effluent Monitoring and Environmental Surveillance*, DOE/EH-0173T, U.S. Department of Energy, Washington, D.C.

Ecology, 1976, *General Regulations of Air Pollution*, Washington Administrative Code 173-400, Olympia, Washington.

Ecology, 1989a, *Dangerous Waste Regulations*, Washington Administrative Code 173-303, Washington State Department of Ecology, Olympia, Washington.

Ecology, 1989b, *State Waste Discharge Permit Programs*, Washington Administrative Code 173-216, Olympia, Washington.

Ecology, 1990a, *Underground Storage Tank Regulations*, Washington Administrative Code 173-360, Washington State Department of Ecology, Olympia, Washington.

Ecology, 1990b, *State Waste Discharge Permit Program*, Washington Administrative Code 173-216, Washington State Department of Ecology, Olympia, Washington.

Ecology, 1990c, *Submission Plans and Reports for Construction of Wastewater Facilities*, Washington Administrative Code 173-240, Olympia, Washington.

Ecology, et al., 1991, *Hanford Federal Facility Agreement and Consent Order*, Volumes 1 and 2, Washington State Department of Ecology, U.S. Environmental Protection Agency, and U.S. Department of Energy, Olympia, Washington.

EPA, 1972, *Approval and Promulation of Implementation Plans*, Title 40, Code of Federal Regulations, Part 52, U.S. Environmental Protection Agency, Washington, D.C.

EPA, 1976, *Requirements for Preparation, Adoption, and Submittal of Implementation Plans*, Title 40 Code of Federal Regulations, Part 51, U.S. Environmental Protection Agency, Washington, D.C.

EPA, 1986, *Test Methods for Evaluating Solid Waste: Physical/Chemical Methods*, SW-846, 3rd Edition, U.S. Environmental Protection Agency, Washington, D.C.

EPA, 1988a, *Technical Standards and Corrective Action Requirements for Owners and Operators of Underground Storage Tanks*, Title 40, Code of Federal Regulations, Part 280, U.S. Environmental Protection Agency, Washington, D.C.

EPA, 1988b, *Approval of State Underground Storage Tank Programs*, Title 40, Code of Federal Regulations, Part 281, U.S. Environmental Protection Agency, Washington, D.C.

EPA, 1989a, *Identification and Listing of Hazardous Waste*, Title 40, Code of Federal Regulations, Part 261, U.S. Environmental Protection Agency, Washington, D.C.

EPA, 1989b, *Designation, Reportable Quantities, and Notification*, Title 40, Code of Federal Regulations, Part 302, U.S. Environmental Protection Agency, Washington, D.C..

EPA, 1989c, *National Emission Standards for Hazardous Air Pollutants*, Title 40, Code of Federal Regulations, Part 61, U.S. Environmental Protection Agency, Washington, D.C.

EPA, 1989d, *National Primary Drinking Water Regulations*, Title 40, Code of Federal Regulations, Part 141, as amended, U.S. Environmental Protection Agency, Washington, D.C.

EPA, 1990a, *Subchapter N--Effluent Guidelines and Standards*, Code of Federal Regulations 401-471, U.S. Environmental Protection Agency, Washington, D.C.

EPA, 1991, *U.S. Environmental Protection Agency Regulations on Standards of Performance for New Stationary Sources*, U.S. Environmental Protection Agency, Washington, D.C.

HEHF, 1990, *Monitoring of Mercury Spill Cleanup, 284-W, 200W Area*, Letter CO 15630, H. N. Bowers, Westinghouse Hanford Company from C. H. St. John, Hanford Environmental Health Foundation, Richland, Washington.

HEHF, 1991, *Mercury Cleanup Evaluation for Release of Area, 284-W Power House, 200-W Area*, Letter CO 16614, P. M. Hickey, Westinghouse Hanford Company from K. A. Lavaty, Hanford Environmental Health Foundation, Richland, Washington.

PNL/WHC, 1989, Memorandum of Understanding, Pacific Northwest Laboratory and Westinghouse Hanford Company, Richland, Washington.

Resource Conservation and Recovery Act of 1976, as amended, 41 USC 6901, Safe et seq.

Safe Drinking Water Act of 1974, as amended, 42 USC 300f et seq.

Washington Clean Air Act of 1967, as amended, RCW 70.94, Revised Code of Washington, Olympia, Washington.

WHC, 1988a, *Operational Environmental Monitoring*, WHC-CM-7-4, as amended, Westinghouse Hanford Company, Richland, Washington.

WHC, 1988b, *Westinghouse Hanford Company Environmental Surveillance Annual Report - 200/600 Areas*, as amended, WHC-EP-0145, Westinghouse Hanford Company, Richland, Washington.

WHC, 1990a, *Managements Requirements and Procedures*, WHC-CM-1-3, as amended, Westinghouse Hanford Company, Richland, Washington.

WHC, 1990b, *Mercury Spill* (Event Fact Sheet), SWU-90-014, Westinghouse Hanford Company, Richland, Washington.

WHC, 1990c, *200 Area Steam and Water Utilities Operations Administration Procedure*, WHC-IP-0568, SWU2-A-013, "200 Area Steam and Water Utilities Operation Emergency Spill Response, Mercury," Westinghouse Hanford Company, Richland, Washington.

WHC, 1991a, *Westinghouse Environmental Compliance Manual*, WHC-CM-7-5, Westinghouse Hanford Company, Richland, Washington.

WHC, 1991b, *A Guide for Preparing Hanford Site Facility Effluent Monitoring Plan Activities*, WHC-EP-0438, Westinghouse Hanford Company, Richland, Washington.

WHC, 1991c, *Facility Effluent Monitoring Plan Determination for the 200 Area Facilities*, WHC-EP-0440, Westinghouse Hanford Company, Richland, Washington.

WHC, 1991d, *Management Policies*, WHC-CM-1-1, MP 5.1, "Environmental Assurance," Westinghouse Hanford Company, Richland, Washington.

WHC, 1991e, *Level III 200 Area Support Services Manual*, WHC-CM-8-2, Westinghouse Hanford Company, Richland, Washington.

WHC, 1991f, *Quality Assurance Project Plan for Facility Effluent Monitoring Plan Activities*, WHC-EP-0446, Westinghouse Hanford Company, Richland, Washington.

WHC, 1991g, *Office of Sample Management Administrative Manual*, WHC-CM-5-3, Westinghouse Hanford Company, Richland, Washington.

WHC, 1991h, *Environmental Investigations and Site Characterization Manual*, WHC-CM-7-7, Westinghouse Hanford Company, Richland, Washington.

WHC, 1991i, *200 Area Steam and Water Utilities Operations Administration Procedure*, WHC-IP-0568, SWU2-A-020, "Chain-of-Custody," Westinghouse Hanford Company, Richland, Washington.

WHC, 1991j, *Facility Effluent Management Plan for 200 Area Activities*, WHC-EP-0491, Westinghouse Hanford Company, Richland, Washington.

WHC, 1991k, *Occurrence Report Notification*, WHC-91-0195-RO, Westinghouse Hanford Company, Richland, Washington.

WHC, 1991l, *Unit Dose Calculation Methods and Summary of Facility Effluent Monitoring Plan Determinations*, WHC-EP-0498, Westinghouse Hanford Company, Richland, Washington.

16.2 REGULATIONS

40 CFR 50 4-7, 1971 - Clean Air Act 1970 (amended 1977), U.S.C. 7401, Established National Ambient Air Quality Standard for Particulate (NAAQS).

40 CFR, Part 51, Appendix P, Sec. 3, 4, and 5 - Minimum Emission Monitoring Requirements.

40 CFR, Part 61, Subpart A, "General Provisions" - List of hazardous air pollutants.

40 CFR 141, "National Interim Primary Drinking Water Regulations (Safe Drinking Water Act)" - Although not applicable to U.S. Department of Energy (DOE) operated drinking water systems, it is the policy of DOE to provide and equivalent level of protection for all persons consuming the water from a drinking water supply operated by, or for, the DOE.

40 CFR 261.3(b) - Characterization of dangerous waste pollutants at the point of discharge.

40 CFR 261(4)(b)(6) - Hazardous Waste Exclusions - Fly ash waste, bottom ash waste, slag waste, or flue gas emissions control waste generated primarily from combustion of gas or other fossil fuel.

40 CFR 302, "Designation, Reportable Quantities, and Notification" - U.S. Environmental Protection Agency (EPA) regulation pertaining to the release of hazardous substances.

40 CFR, Part 403-471 - Categorical processes are identified, specific limitations, monitoring, and reporting requirements have been promulgated for each categorical process.

DOE Order 5484.1, Chapter III, "Effluent and Environmental Monitoring Requirements" - Specific information on the requirements for effluent monitoring systems and programs at the Hanford Site.

DOE Orders 5400.1, 5400.5, and DOE/EH-0173T (1991) - Radioactive and Nonradioactive pollutant effluents released at the Hanford Site. Shall be monitored to determine compliance.

CERCLA, Section 101(14) and 102 (a) *Comprehensive Environmental Response, Compensation, and Liability Act of 1980* (CERCLA) - Designates those substances in the statistics of CERCLA, identifies reportable quantities of these substances, and sets forth the notification requirements for release of these substances.

Clean Water Act, Section 311(b)(2)(A) - Sets forth reportable quantities for hazardous substance designated under CERCLA.

Washington Administrative Code (WAC) 173-303-070 through WAC 303-103, designates Dangerous Wastes.

Resource Conservation and Recovery Act Subtitle C - Regulations pertaining to "Solid Waste", any garbage, refuse, sludge from a waste treatment plant, or air pollution control facility.

Washington Clean Air Act, WAC 173-400 - General instructions for air pollution sources. WAC 173-400-075 - Emission standards for sources emitting hazardous air pollutants.

Standards for nonradioactive airborne effluents: WAC 173-201, WAC 173-210, WAC 173-216, WAC 173-218, WAC 173-220, WAC 173-400-040, -050, -060, -075, and -120.

WAC 173-216 - Controls discharges to ground and surface waters of the State of Washington.

Local Air Pollution Control Authority (APCA), General Regulations 80.7 of Benton-Franklin-Walla Walla Counties APCA - Local Standards for airborne effluents.

16.3 GLOSSARY

Accuracy. The degree of agreement of a measurement, with an accepted reference of true value, usually expressed as the difference between the two values or the difference as a percentage of the reference or true value.

Air Pollution Control Authority. Any air pollution control agency whose jurisdictional boundaries are co-extensive with the boundaries of one or more counties.

Ambient Air Quality Standard. An established concentration, exposure time, and frequency or occurrence of a contaminant or multiple contaminants in the air not to be exceeded.

Bias. A systematic (consistent) error in test results. Bias can exist between test results and the true value (i.e., absolute bias, or lack of accuracy), or between results from different sources (i.e., relative bias). For example, if different laboratories analyze a homogeneous and stable blind sample, the relative biases among the laboratories would be measured by the differences existing among the results from the different laboratories. However, if the true value of the blind sample were known, the absolute bias or lack of accuracy from the true value would be known for each laboratory.

Blanks. Consist of pure deionized, distilled water transferred to a sample container at the site and preserved with the reagent specified for the analytes of interest. They are used to check for possible contamination originating with the reagent or the sampling environment and are normally collected as frequently as duplicate samples.

Blind Sample. A blind sample refers to any type of sample routed to the primary laboratory for auditing performance relative to a particular sample matrix and analytical method. Blind samples are not specifically identified as such to the laboratory; they may be made from traceable standards, or may consist of sample material spiked with a known concentration of a known compound.

Blowdown. Water removed under pressure from the boiler to eliminate sediment and reduce total solids.

Boiler. A vessel in which steam or other vapor is generated for use external to itself; a watertube boiler is a boiler in which the tubes contain water and steam, the heat being applied to the outside surface.

Contractual Quantitation Limit. The contractual quantitation limit (CQL) represents the lowest level of quantitation agreed on by the analytical laboratory and formally established in applicable contracts or work orders that the laboratory attests can be reliably achieved within contractually (or work order) established limits of precision and accuracy under routine laboratory operating conditions. The CQL is based on analytical experience and the data needs of individual projects; it represents the minimum acceptable standard against which analytical data will be judged.

Duplicate Sample. Are samples retrieved from the same sampling location using the same equipment and sampling technique as the original sample. They are placed in separate identically prepared and preserved containers, and analyzed independently. Duplicate samples are generally used to verify the repeatability or reproducibility of analytical data and are normally analyzed with each analytical batch or every 20 samples, whichever is greater.

Effluent. Any treated or untreated air emission or liquid discharge at a U.S. Department of Energy (DOE) site or from a DOE facility. The term includes onsite discharge to the atmosphere, lagoons, ponds, cribs, injection wells, French drains, or ditches. The term does not include solid waste stored or removed for disposal or wastes contained in retention basins or tanks before treatment and/or disposal.

Effluent Monitoring. The collection and analysis of samples or measurements of liquid and gaseous effluents for characterizing and quantifying contaminants, assessing radiation exposures of members of the public, providing a means to control effluents at or near the point of discharge, and demonstrating compliance with applicable standards and permit requirements.

Emission. A release of contaminants into the ambient air or the contaminant material so released.

Emission Standard. A regulation (or portion thereof) setting forth an allowable rate of emissions and level of opacity; or prescribing equipment or fuel specifications that results in control of air pollution emission.

Flue Gases. The gaseous products of combustion in the flue to the stack.

Fossil Fuel/Fired Steam Generator. A furnace or boiler used in the process of burning fossil fuel for the primary purpose of producing steam by heat transfer.

Fugitive Dust. A type of particulate emission made airborne by forces of wind, human activity, or both (e.g., unpaved roads, construction sites, or tilled land). Two major categories are anthropogenic sources (those that result directly from and during human activities) and wind erosion sources (those that result from erosion of soil by wind). Fugitive dust is distinguished from fugitive emissions.

Fugitive Emissions. Contaminants that are generated by industrial or other activities not covered by the fugitive dust definition released to the atmosphere through openings such as windows, vents, doors, ill fitting oven closures, rather than primary exhaust systems or are re-entrained from

unenclosed material handling operations. Aggregate storage operations and active tailing pile are included in this category of sources.

Grate. The surface on which fuel is supported and burned, and through which air is passed for combustion.

Internal Quality Control. The routine activities and checks, such as periodic calibrations, duplicate analyses, use of spiked samples, included in normal internal procedures to control the accuracy and precision of a measurement process.

Matrix Spike Samples. A type of laboratory-quality control sample; they are prepared by splitting a sample received from the field into two homogenous aliquot (i.e., replicate samples) and adding a known quantity of a representative analyte of interest to one aliquot to calculate the percent of recovery. One of the aliquot is designated as the matrix spike, the other as the matrix spike duplicate.

Opacity. The degree to which an object seen through a smoke or vapor plume is obscured.

Potential Emission. An unexpected occurrence that may result in emissions in excess of emission standards upset.

Precision. A measure of the repeatability or reproducibility of specific measurements under a given set of conditions. Specifically, it is a quantitative measure of the variability of a group of measurements compared to their average value. Precision is normally expressed in terms of standard deviation, but may also be expressed as the coefficient of variation (i.e., relative standard deviation) and range (i.e., maximum value minus minimum value). Precision is assessed by means of duplicate/replicate sample analysis.

Quality Assurance. For the purposes of effluent monitoring, quality assurance refers to the total integrated quality planning, quality control, quality assessment, and corrective action activities that collectively ensure that data from monitoring and analysis meets all end user requirements and/or the intended end use of the data.

Quality Assurance Project Plan. The quality assurance project plan is an orderly assembly of management policies, project objectives, methods, and procedures that defines how data of known quality will be produced for a particular project, investigation, or monitoring program.

Quality Control. For the purposes of effluent monitoring, quality control refers to the routine application of procedures and defined methods to the performance of sampling, measurement, and analytical processes.

Sample. A physical specimen of air or water.

Zeolite. Originally a group of natural minerals capable of removing calcium and magnesium ions from water replacing them with sodium. The term has been broadened to include synthetic resins that similarly soften water by ion exchange.

DISTRIBUTION

Number of Copies		
OFFSITE		
3	Westinghouse Idaho Nuclear Company PO Box 4000 Idaho Falls, Idaho 83403	
	K. Kouri	32-02
ONSITE		
7	U.S. Department of Energy Field Office, Richland	
	G. M. Bell	A5-52
	R. F. Brich	A5-55
	S. S. Clark	A6-55
	E. B. Dagan	A5-19
	L. A. Huffman	A6-55
	S. D. Stites	A5-19
	Public Reading Room	A1-65
1	Hanford Environmental Health Foundation	
	L. J. Maas	B2-75
1	Kaiser Engineers Hanford	
	P. G. Bodily	E2-10
7	Pacific Northwest Laboratory	
	W. J. Bjorklund	P7-68
	T. D. Chikalla	P7-75
	R. E. Jaquish	K1-30
	D. L. Klages	P7-68
	A. K. Stalker	P7-60
	R. K. Woodruff	K6-13
	Technical Files	K1-11

DISTRIBUTION (continued)

Number of Copies

ONSITE

91 Westinghouse Hanford Company

S. E. Albin	T1-06
S. M. Anthony	N3-05
J. A. Bates	B2-19
R. J. Bliss	B3-04
R. E. Bolls	N3-13
J. R. Brehm	R2-77
S. L. Brey	T6-12
J. D. Briggs	T6-14
M. J. Brown	T1-30
G. D. Carpenter	B2-16
G. J. Carter	T1-06
L. P. Diediker (2)	T1-30
J. J. Dorian	B2-16
J. A. Eacker	R1-51
R. G. Egge	R2-77
B. G. Erlandson	B2-19
D. G. Farwick	H4-16
K. A. Gano	X0-21
L. A. Garner	T5-54
E. M. Greager	L6-60
F. Grey	R1-08
K. A. Hadley	N1-35
N. S. Hale	B4-53
M. J. Hall	B2-19
J. W. Handy	B2-19
D. R. Herman	S4-01
K. R. Jordan	B3-51
E. J. Kosiancic	S0-61
R. J. Landon	B2-19
R. E. Lerch	B2-35
G. J. Miskho	R2-50
J. M. Nickels (43)	T1-30
K. A. Peterson	S6-70
D. R. Pratt	T1-30
R. J. Thompson	S6-01
R. R. Thompson	L4-88
L. W. Vance	H4-16
G. E. Vansickle	R2-81
D. J. Watson	X0-41
B. F. Weaver	T3-11
C. D. Wollam	S6-19
Document Processing and Distribution (2)	L8-15
Central Files	L8-04
Information Release Administration (3)	R1-08

9 2 1 2 3 5 7 0 2 9 3