U.S. DEPARTMENT OF ENERGY
Hanford Waste Vitrification Plant
Richland, Washington
DOE Contract DE-AC06-86RL10838

START

0010142

FLUOR DANIEL, INC.
Advanced Technology Division
Fluor Contract 8457

REVISION NO.- C
ISSUE DATE _____

HWVP
PRELIMINARY DESIGN
PROCESS CONTROL DESCRIPTIONS

B-595-C-17500

DS-170 Canister Closure

ORIGINATOR:

A. Russell for D V Benac
D. V. Benac Process Engineer Date

CHECKER:

A. Russell
A. Russell Task Leader Date 7-19-90

APPROVED BY:

A Russell
A. Russell Task Leader Date 7-19-90

R G Tagney
R. G. Tagney I&C Task Leader Date 7-19-90

B J Reckman
B. J. Reckman Systems Manager Date 7/23/90

O. P. Chawla QA Engineer Date

F. G. Brooks Engineering Manager Date

R. N. Gibbons Project Manager Date

AUG 1990
RECEIVED
EDMC

9011884137 5

TITLE: SYSTEM 170 CANISTER CLOSURE

1.0 GENERAL DESCRIPTION

The Canister Closure System (System 17) performs a temporary (inner canister) closure and a final welded closure in the Melter Cell and Smear Test/Exit Tunnel respectively.

Because System 17 is divided into two distinct operations, inner canister closure (ICC) system and welder system, this PCD is arranged as follows: Section 1, General Description covers both systems. Sections 2 through 9 cover inner canister closure and Sections 12 through 19 cover the welder.

1.1 INNER CANISTER CLOSURE SYSTEM

The Inner Canister Closure and Temperature Survey Station (CS-170-001V) is physically located in the Melter Cell. It receives filled canisters from the Melter Turntable via the Remote Handling Melter Cell Crane (CN-710-004). See Attachment 1 for a block diagram of the system.

The inner canister closure system performs four functions:

1.1.1 Leak testing of the plugged canister (described in 2.1.1).

1.1.2 A temperature survey of the canister surface to ensure the canister surface has cooled below 212 °F (described in 2.1.2).

1.1.3 Insertion of an inner canister closure (ICC) metal plug if the plug is not inserted on the turntable (described in 2.2.1).

1.1.4 Replacement of the ICC plug if the leak test fails (described in 2.2.2).

Once an ICC plug is inserted, the leak test is passed, and the surface of the canister has cooled, the canister is transported via the Remote Handling Melter Cell Crane to the Preliminary Canister Decontamination Station.

1.2 WELDER SYSTEM

The Canister TIG Welder (WE-170-001V) and Overpack TIG Welder (WE-170-002V) are located in the Smear Test/Exit Tunnel. Auxiliary equipment for both welders is located in the Exit Tunnel Operating Gallery. The welder system receives filled canisters from the CDC Smear Test Station via the Smear Test/Exit Tunnel Crane (CN-710-007). See Attachment 2 for a block diagram of the welder system.

The welder system performs the following functions:

1.2.1 A Master Slave Manipulator (MSM) is used to place a final weld lid on the canister.

1.2.2 The Tungsten Inert Gas (TIG) welders perform a final closure weld on a canister or overpack.

1.2.3 A canister or overpack is leak checked in the Leak Check Chamber (VX-170-001).

2.0 OPERATING DESCRIPTION NARRATIVE - INNER CANISTER CLOSURE

For the ICC portion of System 17, indicators, switches, controllers, and alarms are located on the ICC System Local Panel (LP-170-001). Logic Controllers are in the local panel Programmable Logic Controller (PLC). Mode/Status signals are sent to the Central Control Room DCS display. The ICC operations are controlled from the local panel by an operator following a written procedure.

2.1 ROUTINE OPERATIONS

2.1.1 Leak Test Procedure

After the canister has been filled and rotated from under the melter pour spout, the operator manually inserts the tapered ICC plug into the hot canister neck using a manipulator. The tapered plug (approximately 2 degree taper) fits into a tapered sleeve that is shrink fitted into the canister neck before glass filling. As the canister cools, the plug forms a water tight shrink fit to prevent water from entering the canister during subsequent decon operations. The canister is then moved to the Inner Canister Closure and Temperature Survey Station (CS-170-00IV) by the melter Cell Crane (CN-710-004) where the following steps are performed to check the leak tightness of the plug:

1) The ICC Helium Leak Test Assembly Swingarm is rotated over the canister by placing the Leak Test Assembly Swingarm Rotation Switch (HIS-170-207) in the EXTEND position. The "vee" block causes the Leak Test Assembly to self center the bell jar over the canister. Limit switch ZSH-170-207 on the "vee" block automatically shuts off the swingarm drive mechanism via the Leak Test Assembly Swingarm Rotation Logic Controller (YC-170-207), when the bell jar is centered.

2) The Leak Test Assembly bell jar is lowered onto the canister by placing the Leak Test Assembly Swingarm UP/DOWN Switch (HIS-170-208) in the DOWN position. This seats the bell jar on the upper surface of the canister, and forces the Floating Head Assembly upward. The upward movement clamps the canister flange between the bell jar and the Floating Head Assembly. When the clamping force reaches 4000 lbs. a signal from XSH-170-213 to the Leak Test Assembly Swingarm UP/DOWN Logic Controller (YC-170-208) stops the upward movement of the Floating Head Assembly. The bell jar is fitted with a remotely replaceable gasket to provide a leak tight seal for the helium pressure decay test.

3) The bell jar is prepared for initial pressurization by placing the Leak Test Station Equalization Valve Switch (HIS-170-204) in the CLOSE position. The

9 0 1 1 8 8 4 1 3 7 7

receiver is pressurized by opening the Helium Receiver Inlet Valve (YV-170-205). When the Helium Receiver's internal pressure reaches 100 psig as indicated by the Helium Receiver Pressure Indicator (PI-170-210), the Helium Receiver Inlet Valve (YV-170-205) is closed automatically by a signal from PSH-170-210 to Helium Receiver Inlet Valve Logic Controller (YC-170-205). Pressure alarm PLH-170-210 also lights when the receiver is pressurized to 100 psig.

4) The gross leak test is performed by placing the Bell Jar Inlet Valve Switch (HIS-170-203) in the OPEN position to allow pressure equalization between the bell jar and receiver. The pressure is monitored within the bell jar by pressure recorder PR-170-202 immediately after the valve is opened and one (1) hour later. If the pressure does not change in this time period, a fine leak test is performed (step 6). If the pressure does change, the bell jar gasket seal must be checked as described in Section 2.2.3. After checking the seal, a second gross leak test is performed. If the leak is still present, the gasket must be replaced.

5) As the canister flange cools, the gas temperature in the bell jar is measured by temperature element TE-170-201. The measured temperature is transmitted to temperature indicator TI-170-201. This signal is used to provide temperature compensation for the Bell Jar Pressure Recorder (PR-170-202) as discussed in Section 5.2.

6) To perform the fine leak test, both the Helium Receiver Inlet Valve (YV-170-205) and Bell Jar Inlet Valve (YV-170-203) are switched into the OPEN position. When the pressure within the bell jar (PT-170-202) reaches 100 psig, the Bell Jar Inlet Valve (YV-170-203) is switched to the CLOSE position, the Helium Receiver Inlet Valve (YV-170-205) is switched to the CLOSE position, and then the Leak Test Station Equalization Valve (YV-170-204) is switched to the OPEN position. When the Bell Jar Inlet Valve Switch (HIS-170-203) is placed in the CLOSE position, the pressure recorder (PR-170-202) chart drive is started by a signal from YC-170-203. The plot is examined after one hour. If the leak rate is greater than acceptable, the seal must be checked. After checking the seal, as described in section 2.2.3, a second fine leak test is performed. If the leak rate is greater than acceptable the ICC must be replaced.

7) The pressure within the bell jar and the surrounding atmosphere is equalized by placing the Bell Jar Inlet Valve Switch (HIS-170-203) and the Leak Test Station Equalization Valve Switch (HIS-170-204) in the OPEN position.

8) The bell jar is raised by placing the Leak Test Assembly Swingarm UP/DOWN Switch (HIS-170-208) in the UP position. The Leak Test Assembly Swingarm UP/DOWN Logic Controller (YC-170-208) automatically stops the actuator when the swingarm reaches the fully raised position (ZSH-170-208).

9) The Leak Test Assembly is moved away from the canister by placing the Leak Test Assembly Swingarm Rotation Switch (HIS-170-207) in the RETRACT position. Leak Test Assembly Swingarm Rotation Logic Controller (YC-170-207) automatically stops the swing when it reaches its counter-clockwise rotational limit (ZSL-170-207).

This completes the Leak Test Procedure.

9 0 1 8 4 1 3 7 6

2.1.2 Canister Temperature Survey

Following the completion of a successful leak test, the canister surface temperature is surveyed by an operator using the MSM. The MSM scans the surface of the canister with temperature element TE-170-105 to measure the temperature of the canister surface as it cools. The temperature range is 100-2100 °F. Temperature indicator TI-170-105 indicates the temperature measured on the canister surface, and has an associated high temperature alarm (TAH-170-105) which remains activated until the canister temperature drops below 212 °F. At a temperature of 212 °F or lower, the canister may be moved to the Preliminary Decontamination Station.

2.2 INFREQUENT NORMAL OPERATIONS

2.2.1 ICC Insertion

In the event that the ICC plug is not inserted while the canister is on the turntable, the canister is transported to the ICC station where the canister neck is heated by means of a resistance heater mounted on a swing arm assembly as follows and the ICC plug installed at that location:

Canisters are transported by the Remote Handling Melter Cell Crane (CN-710-004) to the Inner Canister Closure and Temperature Survey Station (CS-170-001V). The following steps are used to insert an ICC plug into the canister neck:

1) The Heater Swing arm is rotated over the canister by putting the Heater Swingarm Switch (HIS-170-102) in the EXTEND position. The rotational position of the swingarm is indicated on position indicator ZI-170-101 and on mode/status indicator YI-170-102 in the central control room. Limit switch ZSH-170-101 automatically stops the swingarm drive, via Heater Swingarm Logic Controller (YC-170-102), when the arm reaches its EXTEND position.

2) The heater coil is lowered by placing the Heater Swingarm Switch (HIS-170-102) in the DOWN position. The UP/DOWN position of the swingarm is indicated on position indicator ZI-170-104 and on mode/status indicator YI-170-102 in the Central Control Room. Limit switch ZSL-170-104 automatically stops the swingarm drive, via Heater Swingarm Logic Controller (YC-170-102), when the arm reaches the full DOWN position.

3) The Heater Temperature Controller (TIC-170-103) is set at the required temperature (400 °F) and turned on. It is interlocked with the Heater Swingarm Logic Controller (YC-170-102) so that the heater can only be turned on when the swingarm is in the EXTEND and DOWN position. The analog Heater Temperature Controller (TIC-170-103) sends a control signal to the Heater Power Controller (JC-170-103) to heat up the canister flange without significant temperature overshoot.

4) When the flange temperature reaches 400 °F the operator turns off the Heater Temperature Controller (TIC-170-103) and puts Heater Swingarm Switch (HIS-170-102) in the UP position. The Heater Swingarm Logic Controller (YC-170-102) sends a signal to raise the swingarm until it reaches the UP position where it is stopped by limit switch ZSH-170-104.

9 0 1 8 8 4 1 3 7 9

5) The Swingarm is rotated away from the canister by placing the Heater Swingarm Switch (HIS-170-102) in the RETRACT position. When the swingarm reaches the RETRACT position, limit switch ZSL-170-101 automatically stops the swingarm drive via Heater Swingarm Logic Controller YC-170-102.

6) The MSM operator, using special tongs, lifts an ICC plug from its storage position and places it into the canister, completing the ICC insertion operation.

2.2.2 ICC Replacement

If the bell jar gasket seal is tight and the canister fails the leak test, the ICC must be removed, and a new ICC inserted. This is accomplished by rapidly heating the canister neck to thermally expand the neck faster than the plug and sleeve which then drop into the canister. A larger diameter plug is then inserted in place of the defective plug and sleeve as follows:

1) The heater is rotated over the canister by placing the Heater Swingarm Switch (HIS-170-102) in the EXTEND position.

2) The heater coil is lowered by placing the Heater Swingarm Switch (HIS-170-102) in the DOWN position. The Heater Temperature Controller (TIC-170-103) is set to the required temperature.

3) The operator visually observes the ICC Position Indicating Shaft to see that the plug drops into the canister. If the plug does not drop within approximately fifteen (15) minutes, the operator taps the top of the ICC Position Indicating Shaft to dislodge the plug and sleeve. (Note - the base of the ICC Position Indicating Shaft sits on top of the plug lifting knob, so the tapping force is transmitted to the plug and sleeve.)

4) After the plug and sleeve have dropped into the canister, the temperature set point of the Heater Temperature Controller (TIC-170-103) is readjusted. The canister neck and flange will continue to be heated until their temperature is adequate for inserting the new ICC. The Heater Temperature Controller is then turned off by the operator.

5) The Heater Swingarm Switch (HIS-170-102) is placed in the UP position to raise the heater coil. A limit switch (ZSH-170-104) automatically shuts off the actuator at the UP position.

6) The operator rotates the heater swingarm away from the canister by placing Heater Swingarm Switch (HIS-170-102) in RETRACT. The swingarm drive mechanism automatically stops when it reaches its fully retracted position (ZSL-170-101).

7) An ICC Retaining Device containing a new ICC plug is lifted using a MSM and positioned over the canister neck. The new plug is then lowered onto the canister and held in place by the Retaining Device until the canister has cooled to form a shrink fit on the new ICC plug. The MSM is then used to remove the Retaining Device.

8) A leak test is made to check the seal of the replaced ICC as described in Section 2.1.1

2.2.3 Bell Jar Gasket Seal Integrity Test

As mentioned in steps 4 and 6 of 2.1.1 above, if the canister fails either of the leak tests, a check of the bell jar gasket seal is made. After removing the canister from the test position, the Seal Integrity Test is made as follows:

1) The Leak Test Assembly is raised by the Leak Test Assembly Swingarm UP/DOWN Switch (HIS-170-208) and the swingarm is rotated to its RETRACT position by the Leak Test Assembly Swingarm Rotation Switch (HIS-170-207).

2) The test flange is raised by placing the Lift Table Switch (HIS-170-209) in the UP position. Lift Table Logic Controller (YC-170-209) automatically stops the lift table drive when the test flange is raised to the same elevation (ZSH-170-209) as the canister flange.

3) The Leak Test Assembly is rotated over the test flange by placing the Leak Test Assembly Swingarm Rotation Switch (HIS-170-207) in the EXTEND position. The swingarm drive automatically stops when the Leak Test Assembly is centered over the test flange (ZSH-170-207).

4) The Leak Test Assembly is lowered by the Leak Test Assembly Swingarm UP/DOWN Switch (HIS-170-208). It stops when the force measured by XSH-170-213 reaches 4000 lbs.

5) Preparation is made for the seal integrity test by placing the Leak Test Station Equalization Valve Switch (HIS-170-204) in the CLOSE position and the Bell Jar Inlet Valve (YV-170-203) and Helium Receiver Inlet Valve (YV-170-205) in the OPEN position. After the pressure within the bell jar reaches 100 psig, as shown by pressure indicator PI-170-210, the Helium Receiver Inlet Valve (YV-170-205) and Bell Jar Inlet Valve (YV-170-203) are switched into the CLOSE position and the pressure recorder PR-170-202 chart drive is started. The plot is examined after one hour. If the leak rate is greater than acceptable the seal must be replaced, as described in Section 2.2.4.

6) The pressure within the bell jar and the surrounding atmosphere is equalized by placing the Leak Test Station Equalization Valve Switch (HIS-170-204), and the Bell Jar Inlet Valve Switch (HIS-170-203) in the OPEN position.

7) The Leak Test Assembly is raised by placing the Leak Test Assembly Swingarm UP/DOWN Switch (HIS-170-208) in the UP position. The actuator automatically stops when it reaches the fully UP position (ZSH-170-208).

8) The swingarm is moved away from the test flange by placing the Leak Test Assembly Swingarm Rotation Switch (HIS-170-207) in the RETRACT position. The swingarm automatically stops when it is fully retracted (ZSL-170-207).

9) The test flange is lowered to its retracted position by placing the Lift Table Switch (HIS-170-209) in the DOWN position. The lift table automatically stops when it is lowered far enough (ZSL-170-209) to allow rotation of the swingarm over the top of the test flange.

2.2.4 Bell Jar Gasket Seal Replacement

To replace a seal, the following steps are performed.

1) The Leak Test assembly Swingarm Rotation Switch (HIS-170-207) is placed in the EXTEND position to center the bell jar over the test flange. The assembly is placed in the UP position with the Leak Test Assembly Swingarm UP/DOWN Switch (HIS-170-208). The test flange is placed in the UP position by raising the lift table (HIS-170-209).

2) The seal assembly is pulled off of the spring loaded magnetic assembly by an operator using the MSM. The defective seal is placed in the used seal storage bin.

3) Using the MSM, a new seal assembly is picked up from the new seal storage dispenser located on the removable platform.

4) The seal is placed on top of the flange. The seal is moved as required to ensure that it is concentric with the test flange.

5) The Leak Test Assembly is lowered onto the new seal by placing the Leak Test Assembly Swingarm UP/DOWN Switch (HIS-170-208) in the DOWN position. The Leak Test Assembly stops when the force reaches 4000 lbs (XSH-170-213).

6) A leak test is performed on the new seal, as described in Section 2.2.3.

2.3 ABNORMAL CONDITIONS

No abnormal conditions are identified for this system.

3.0 APPLICATION PROGRAM SPECIFICATIONS

No application programs are identified for this system.

4.0 LOGIC CONTROLLER SPECIFICATIONS

The interfaces to logic controllers are listed below. Logic controller specifications are to be documented in Detail Design.

4.1 YC-170-102 Heater Swingarm Logic Controller

4.2 YC-170-203 Bell Jar Pressurization Logic Controller

4.3 YC-170-204 Equalization Valve Logic Controller

4.4 YC-170-205 Helium Receiver Inlet Valve Logic Controller

4.5 YC-170-207 Leak Test Assembly Swingarm Rotation Logic Controller

4.6 YC-170-208 Leak Test Assembly Swingarm Up/Down Logic Controller

4.7 YC-170-209 Lift Table Logic Controller

5.0 SPECIAL ANALOG FUNCTIONS

5.1 HEATER TEMPERATURE CONTROLLER TIC-170-103

TIC-170-103 measures the canister neck heater temperature by averaging the signals from TT-170-103A and TT-170-103B. The controller is turned on and off by the operator and is interlocked with YC-170-102 so that it can only be turned on when the Heater Swingarm is in the EXTEND and DOWN position.

5.2 BELL JAR PRESSURE RECORDER PR-170-202

Signals from Bell Jar Pressure Transmitter (PT-170-202) and Bell Jar Temperature Transmitter (TT-170-201) are processed in the temperature compensator PY-170-202 where a correction to pressure due to the effect of temperature is made. Temperature varies as the helium in the bell jar cools down due to canister cooling. The temperature compensated output is plotted on PR-170-202 with respect to time as soon as a START signal is received from YC-170-203.

6.0 ACRONYMS

ACRONYM	TERM
ICC	Inner Canister Closure
MSM	Master Slave Manipulator
N/A	Not Applicable
PLC	Programmable Logic Controller

7.0 GLOSSARY

7.1 SYSTEM SPECIFIC TERMS

TAG NUMBER	TERM
ZSL/H-170-101	Rotational Limit Switch
HIS-170-102	Heater Swingarm Switch
YC-170-102	Heater Swingarm Logic Controller
JC-170-103	Heater Power Controller
TIC-170-103	Heater Temperature Controller
TI-170-105	Canister Surface Temperature
HIS-170-202	Bell Jar Inlet Valve Switch
PR-170-202	Bell Jar Pressure Recorder
PT-170-202	Bell Jar Pressure Transmitter
PY-170-202	Bell Jar Pressure Temperature Compensator
YC-170-203	Bell Jar Pressurization Logic Controller
YIS-170-203	Bell Jar Inlet Valve Switch
YV-170-203	Bell Jar Inlet Valve
HIS-170-204	Leak Test Station Equalization Valve Switch
YC-170-204	Equalization Valve Logic Controller
YV-170-204	Leak Test Station Equalization Valve
HIS-170-205	Helium Receiver Inlet Valve Switch
YC-170-205	Helium Receiver Inlet Valve Logic Controller
YV-170-205	Helium Receiver Inlet Valve
HIS-170-207	Leak Test Assembly Swingarm Rotation Switch
YC-170-207	Leak Test Assembly Swingarm Rotation Logic Controller
HIS-170-208	Leak Test Assembly Swingarm UP/DOWN Switch
XSH-170-213	Force Switch
YC-170-208	Leak Test Assembly Swingarm UP/DOWN Logic Controller
HIS-170-209	Lift Table Switch
YC-170-209	Test Flange Logic Controller
PI-170-210	Helium Receiver Pressure Indicator

7.2 GENERIC ISA INSTRUMENTS

TAG	DESCRIPTION
HS	hand switch
HV	valve
PLH	pressure alarm (light)
PSH/PSL	pressure switch
PR	pressure recorder
PT	pressure transmitter
TAH/TAL	temperature alarm
TE	temperature element
TI	temperature indicator
TL	temperature alarm (light)
TSH/TSL	temperature switch
TT	temperature transmitter
XSH	load switch
YI	mode/status indicator
ZI	position indicator
ZSH/L	limit (position) switch

8.0 REFERENCE LIST

8.1 DOCUMENTS AND EQUIPMENT COVERED BY THIS PCD

SYS NO.	DESCRIPTION	EQUIPMENT NUMBER	P&ID H-2-XXXXXX-XX	SCD H-2-XXXXXX-XX	CLD H-2-XXXXXX-XX
170	Inner Canister Closure/ Temp. Survey Station	CS-170-001V	123152-1,2	TBD	TBD
170	Inner Canister Closure Station Local Panel	LP-170-001	123152-1,2	TBD	TBD

8.2 DOCUMENTS AND EQUIPMENT THAT INTERFACE WITH THIS PCD

SYS NO.	DESCRIPTION	EQUIPMENT NUMBER	P&ID H-2-XXXXXX-XX	SCD H-2-XXXXXX-XX	CLD H-2-XXXXXX-XX
710	Remote Handling Melter Cell Crane	CN-710-004	N/A	TBD	TBD
16A	Preliminary Canister Decontamination Station	N/A	123151-16	TBD	TBD

9.0 ATTACHMENTS

Attachment No.	Description
1	Inner Canister Closure System Block Diagram

10.0

(This section not used for System 17 PCD)

11.0

(This section not used for System 17 PCD)

12.0 OPERATING DESCRIPTION NARRATIVE - WELDER SYSTEM

The welder system is located in the Smear Test/Exit Tunnel. The welder system has two stations at which different operations are performed. After undergoing and passing a smear test, the canister is transported and placed on the Exit Tunnel Turntable (TU-230-001V) by the tunnel's crane. After an inspection of the canister's neck area, a weld lid is placed on the canister by an MSM. The Canister TIG Welder (WE-170-001V) is placed on the canister lid and the lid is welded. The weld area is visually inspected and the canister is transported to the Leak Check Chamber (VX-170-001). A helium leak check is performed on the welded canister by using the Helium Leak Detector (LD-170-001). Following a successful leak check, the canister is transported to the smear test station for a final smear test.

The welder system is remotely controlled at local panels LP-170-002 and LP-170-003. Handswitches and indicators are provided on the panels for controlling and monitoring the closure process. LP-170-002 also incorporates a Welder Data Acquisition System (CP-170-001) (DAS) for high speed monitoring and documentation of welding parameters.

The Smear Test/Exit Tunnel is a contact maintained area. This means that TIG Welders and the Leak Check Chamber are accessible for hands-on maintenance and repair but only when no canister is in the Smear Test/Exit Tunnel.

12.1 ROUTINE OPERATIONS

Local operation of the welder is enabled from the CCR through handswitch HIS-170-326.

12.1.1 TIG Welder Operation

After the Canister TIG Welder has been positioned on the canister properly, the cover gas is started with the manual needle valve. Gas temperature, pressure, and flow rate are monitored by TI-170-311, PI-170-310, and FYI-170-312A respectively in the distributed control system (DCS). Gas flow rate is also monitored and properly adjusted by using FI-170-312B located on local panel LP-170-002.

The weld sequence is started by using panel mounted controller UIC-170-318. This controller is furnished by the welder vendor. All welder operations are automatic.

The welder tack welds the lid prior to performing the final closure weld. This prevents movement of the lid during final welding. Details of the welder operation will be developed as technology issues during the detailed design effort.

The Canister TIG Welder Power Pack (WE-170-001V-PP) transmits various welder parameters to the DAS. These parameters include weld voltage, current, time, and welder head speed. The power pack also sends these parameters to vendor furnished recorder UR-170-317. The recorder is mounted in local panel LP-170-002.

12.1.2 Helium Leak Detector Operation

Following a successful final closure weld and visual inspection, the canister is placed into the Leak Check Chamber (VX-170-001). The chamber's lid is remotely closed and the leak check cycle is initiated by using vendor supplied controller UIC-170-341. All leak check operations are automatically controlled by UIC-170-341.

The leak check cycle starts with a calibration of the detector. The detector's roughing vacuum pump then evacuates the Leak Check Chamber. The chamber is evacuated and backfilled several times with dry gaseous nitrogen to remove trace background helium from the Leak Check Chamber. Detector readings are then monitored and recorded in the gross and fine leakage ranges. Results are displayed on controller UIC-170-341. Results are also displayed and recorded in the DCS on UIR-170-338.

Cold trap chiller CF-170-001 provides cooling for the leak detector's cold trap. Cold trap exhaust temperatures are monitored in the DCS by temperature indicator TI-170-339A and locally by temperature indicator TI-170-339B.

The leak check chamber's evacuation line pressure is monitored by pressure indicator PI-170-340A.

12.2 INFREQUENT NORMAL OPERATIONS

If the canister fails the visual inspection or leak check after final welding, then a repair weld cycle or an overpack may by required. A repair weld cycle is performed by the Canister TIG Welder (WE-170-001V). Overpacks are welded with the Overpack TIG Welder (WE-170-002V).

12.2.1 Repair Weld Cycle

Welder operations for repair welds are similar to those for final welds. After the Canister TIG Welder has been positioned on the canister properly, the cover gas is started with the manual needle valve. Gas temperature, pressure, and flow rate are monitored and adjusted.

The repair weld sequence is started by using panel mounted controller UIC-170-318. All repair weld operations are automatic. Weld voltage, current, time, and speed are measured by the DCS. Details of repair weld operations will be developed as technology issues during the detailed design effort.

12.2.2 Overpack TIG Welder Operation

After the Overpack TIG Welder (WE-170-002V) has been positioned on the Overpack properly, the cover gas is started with the manual needle valve. Gas temperature, pressure, and flow rate are monitored by TI-170-311, PI-170-310, and FYI-170-312A respectively in the distributed control system (DCS). Gas flow rate is also monitored and properly adjusted by using FI-170-312B located on local panel LP-170-002.

The weld sequence is started by using panel mounted controller UIC-170-325. This controller is furnished by the welder vendor. All welder operations are automatic. The welder tack welds the overpack lid prior to performing the final closure weld. This prevents movement of the lid during final welding. Details of the overpack welder operation will be developed as technology issues during the detailed design effort.

The Overpack TIG Welder Power Pack (WE-170-002V-PP) transmits various welder parameters to the DAS. These parameters include weld voltage, current, time, and welder head speed. The power pack also sends these parameters to vendor furnished recorder UR-170-324. The recorder is mounted in local panel LP-170-002.

12.3 ABNORMAL CONDITIONS

No abnormal conditions are identified for this system.

13.0 APPLICATION PROGRAM SPECIFICATIONS

No application programs are identified for this system.

14.0 LOGIC CONTROLLER SPECIFICATIONS

No logic controllers are identified for this system.

15.0 SPECIAL ANALOG FUNCTIONS

No special analog functions are identified for this system.

16.0 ACRONYMS

ACRONYMS	TERM
DAS	Data Acquisition System
DCS	Distributed Control System
TIG	Tungsten Inert Gas

17.0 GLOSSARY

17.1 SYSTEM SPECIFIC TERMS

TAG NUMBER	TERM
PI-170-310	Cover Gas Pressure Indicator
TI-170-311	Cover Gas Temperature Indicator
FYI-170-312A	Cover Gas Flow Indicator
FYI-170-312B	Cover Gas flow Indicator (local)
UR-170-317	Canister TIG Welder Recorder
UIC-170-318	Canister TIG Welder Controller
UR-170-324	Overpack TIG Welder Recorder
UIC-170-325	Overpack TIG Welder Controller
UI-170-338	Helium Leak Detector Indicator
UIC-170-341	Helium Leak Detector Controller

17.2 GENERIC ISA INSTRUMENTS

See Section 7.2

18.0 REFERENCE LIST

18.1 DOCUMENTS AND EQUIPMENT COVERED BY THIS PCD

SYS NO.	DESCRIPTION	EQUIPMENT NUMBER	P&ID H-2-XXXXXX-XX	SCD H-2-XXXXXX-XX	CLD H-2-XXXXXX-XX
170	Cold Trap Chiller	CF-170-001	123152-3		
170	Welder Data Acquisition System	CP-170-001	123152-3		
170	Helium Leak Detector	LD-170-001	123152-3		
170	Leak Check Chamber	VX-170-001	123152-3		
170	Canister TIG Welder	WE-170-001V	123152-3		
170	Canister TIG Welder Power Pack	WE-170-001V-PP	123152-3		
170	Overpack TIG Welder	WE-170-002V	123152-3		
170	Overpack TIG Welder Power Pack	WE-170-002V-PP	123152-3		

18.2 Documents and Equipment that Interface with this PCD

SYS NO.	DESCRIPTION	EQUIPMENT NUMBER	P&ID H-2-XXXXXX-XX	SCD H-2-XXXXXX-XX	CLD H-2-XXXXXX-XX
230	Exit Tunnel Turntable	TU-230-001V	123161-6		
710	Smear Test/Exit Tunnel Crane	CN-710-007	N/A		

19.0 ATTACHMENTS

Attachment No.	Description
2	Welder System Block Diagram

9 0 1 1 8 8 4 1 3 9 0

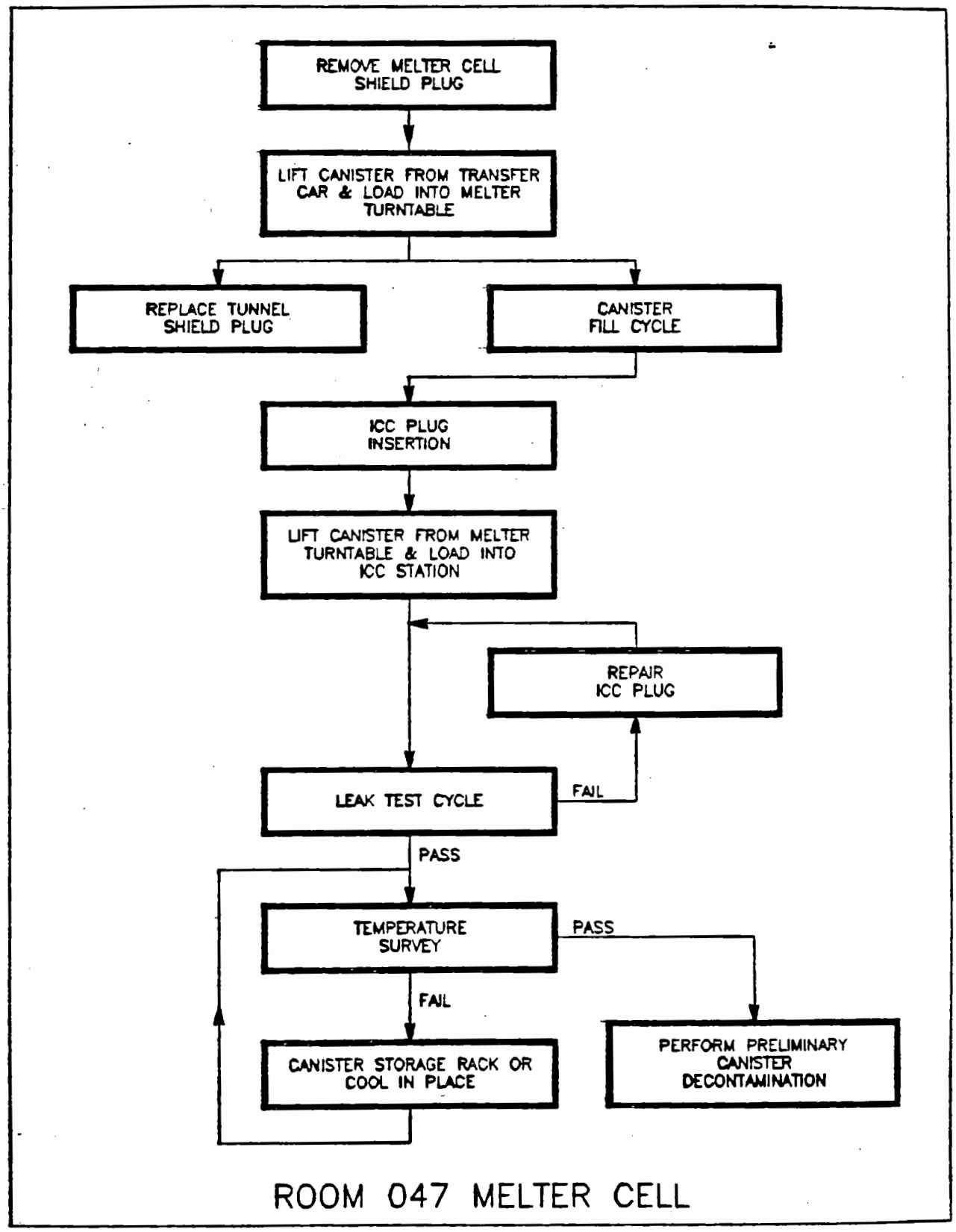

ATTACHMENT 1 - INNER CANISTER CLOSURE SYSTEM BLOCK DIAGRAM

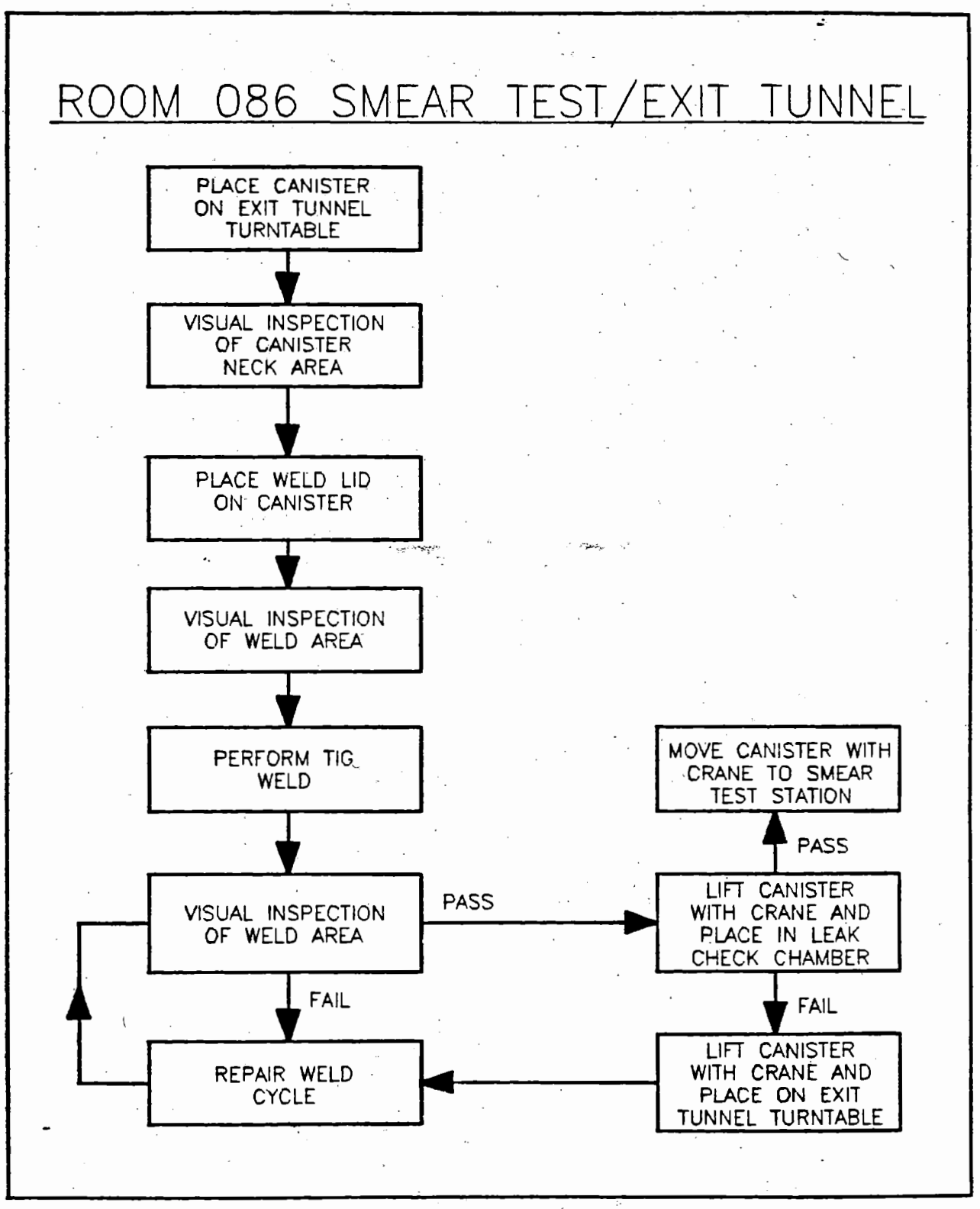

ATTACHMENT 2 - WELDER SYSTEM BLOCK DIAGRAM

PIPING AND INSTRUMENT DIAGRAMS
BOOK 1 OF 3
TABLE OF CONTENTS

DRAWING NO.	SH NO	REV	DRAWING TITLE	CWBS NO
** VOLUME NUMBER: 1				
H-2-121000	1	C	DCS OPERATIONAL BLOCK DIAGRAM	3402
H-2-121001	1	C	DISTRIBUTED CONTROL SYSTEM BLOCK DIAGRAM	3402
H-2-123001	1	02	LEGEND OF SYMBOLOGY FOR PROCESS FLOW AND PIPING AND INSTRUMENT DIAGRAMS	3201
H-2-123001	2	02	LEGEND OF SYMBOLOGY FOR PROCESS FLOW AND PIPING AND INSTRUMENT DIAGRAMS	3201
H-2-123001	3	02	LEGEND OF SYMBOLOGY FOR PROCESS FLOW AND PIPING AND INSTRUMENT DIAGRAMS	3201
H-2-123001	4	02	LEGEND OF SYMBOLOGY FOR PROCESS FLOW AND PIPING AND INSTRUMENT DIAGRAMS	3201
H-2-123001	5	02	LEGEND OF SYMBOLOGY FOR PROCESS FLOW AND PIPING AND INSTRUMENT DIAGRAMS	3201
H-2-123050	1	C	SYSTEM 11 RECEIPT AND LAG STORAGE TANK-A (RLST-A)	3211
H-2-123050	2	C	SYSTEM 11 RECEIPT AND LAG STORAGE TANK-A (RLST-A)	3211
H-2-123050	3	C	SYSTEM 11 RECEIPT AND LAG STORAGE TANK-A (RLST-A)	3211
H-2-123050	4	C	SYSTEM 11 RECEIPT AND LAG STORAGE TANK-B (RLST-B)	3211
H-2-123050	5	C	SYSTEM 11 RECEIPT AND LAG STORAGE TANK-B (RLST-B)	3211
H-2-123050	6	C	SYSTEM 11 RECEIPT AND LAG STORAGE TANK-B (RLST-B)	3211
H-2-123050	7	C	SYSTEM 11 RLST INTERFACE WITH CHEMICAL PROCESS CELL	3211
H-2-123050	8	C	SYSTEM 11 RLST INTRA-AREA LINE LEAK DETECTION	3211
H-2-123051	1	C	SYSTEM 12 SLURRY RECEIPT & ADJUSTMENT TANK (SRAT)	3212
H-2-123051	2	C	SYSTEM 12 SLURRY RECEIPT & ADJUSTMENT TANK (SRAT)	3212
H-2-123051	3	C	SYSTEM 12 SLURRY RECEIPT & ADJUSTMENT TANK (SRAT)	3212
H-2-123051	4		DELETED	
H-2-123051	5		DELETED	
H-2-123051	6	C	SYSTEM 12 SLURRY MIX EVAPORATOR (SME)	3212
H-2-123051	7	C	SYSTEM 12 SLURRY MIX EVAPORATOR (SME)	3212
H-2-123051	8	C	SYSTEM 12 SLURRY MIX EVAPORATOR (SME)	3212

PIPING AND INSTRUMENT DIAGRAMS
BOOK 1 OF 3
TABLE OF CONTENTS

DRAWING NO.	SH NO	REV	DRAWING TITLE	CWBS NO
H-2-123051	9		DELETED	
H-2-123051	10		DELETED	
H-2-123060	1	C	SYSTEM 20A WASTE ADJUSTMENT TANK (WAT-A)	3213
H-2-123060	2	C	SYSTEM 20A WASTE ADJUSTMENT TANK (WAT-A)	3213
H-2-123060	3	C	SYSTEM 20A DECON WASTE TREATMENT TANK (DWTT)	3213
H-2-123060	4	C	SYSTEM 20A DECON WASTE TREATMENT TANK (DWTT)	3213
H-2-123060	5	C	SYSTEM 20A DECON WASTE TREATMENT TANK (DWTT)	3213
H-2-123060	6	C	SYSTEM 20 WASTE HOLD TANK (WHT)	3211
H-2-123060	7	C	SYSTEM 20 WASTE HOLD TANK (WHT)	3211
H-2-123060	8	C	SYSTEM 20C REMOTE MAINTAINED SUMP PUMP/JETS	3214
H-2-123060	9	C	SYSTEM 20C CONTACT MAINTAINED SUMP JETS	3214
H-2-123060	10	C	SYSTEM 20C CONTACT MAINTAINED SUMP PUMPS	3214
H-2-123060	12	C	SYSTEM 20C SUMP INSTRUMENT PIPING SUMMARY	3214
H-2-123060	17	C	SYSTEM 20A FILTER FEED TANK (FFT)	3213
H-2-123060	18	C	SYSTEM 20A FILTER FEED TANK (FFT)	3213
H-2-123060	19	C	SYSTEM 20A SBS FILTER	3213
H-2-123060	20	C	SYSTEM 20A SBS FILTER	3213
H-2-123060	21	C	SYSTEM 20A PRECOAT FEED TANK (PFT)	3213
H-2-123060	23	C	SYSTEM 20C WARM WASTE HEADER	3214
H-2-123060	24	C	SYSTEM 20C WARM WASTE HEADER	3214
H-2-123060	25	C	SYSTEM 20C HOT/INTERMEDIATE WASTE HEADERS	3214
H-2-123060	26	C	SYSTEM 20C JET VENT HEADER	3214
H-2-123060	27	C	SYSTEM 20 WHT INTRA-AREA LINE LEAK DETECTION	3211
H-2-123060	28	C	SYSTEM 20D SLURRY MIX EVAPORATOR CONDENSATE TANK (SMECT)	3212
H-2-123060	29	C	SYSTEM 20D SLURRY MIX EVAPORATOR CONDENSATE TANK (SMECT)	3212
H-2-123060	30	C	SYSTEM 20D RECYCLE WASTE COLLECTION TANK (RWCT)	3212
H-2-123060	31	C	SYSTEM 20D RECYCLE WASTE COLLECTION TANK (RWCT)	3212
H-2-123060	32	C	SYSTEM 20B WASTE ADJUSTMENT TANK (WAT-B)	3212

PIPING AND INSTRUMENT DIAGRAMS
BOOK 1 OF 3
TABLE OF CONTENTS

DRAWING NO.	SH NO	REV	DRAWING TITLE	CWBS NO
H-2-123060	33	C	SYSTEM 20B WASTE ADJUSTMENT TANK (WAT-B)	3212
H-2-123060	34	C	SYSTEM 20D RECYCLE WASTE COLLECTION TANK (RWCT)	3212
H-2-123061	1	C	SYSTEM 22 MELTER FEED TANK (MFT)	3212
H-2-123061	2	C	SYSTEM 22 MELTER FEED TANK (MFT)	3212
H-2-123061	3	C	SYSTEM 22 MELTER FEED TANK (MFT)	3212
H-2-123070	1	C	SYSTEM 58 DRY FRIT HANDLING	3210
H-2-123070	2	C	SYSTEM 58 FRIT SLURRY MAKEUP TANK (FSMT)	3210
H-2-123070	3	C	SYSTEM 58 PROCESS FRIT SLURRY FEED TANK (PFSFT)	3210
H-2-123070	4	C	SYSTEM 58 PROCESS FRIT SLURRY PUMP & FILTER	3210
H-2-123070	5	C	SYSTEM 58 DECON FRIT SLURRY FEED TANK (DFSFT)	3210
H-2-123070	6	C	SYSTEM 58 DECON FRIT SLURRY PUMP & FILTER	3210
H-2-123150	1	B	SYSTEM 13 POUR TURNTABLE	3217
H-2-123150	2	B	SYSTEM 13 POUR TURNTABLE	3217
H-2-123150	3	B	SYSTEM 13 DRAIN TURNTABLE	3217
H-2-123150	4	B	SYSTEM 13 MELTER THERMOCOUPLES FOR GLASS TEMP. MEAS. & ELECTRODE CONTROL	3217
H-2-123150	5	B	SYSTEM 13 MELTER DRAIN VALVE AND DRAIN BELLOWS	3217
H-2-123150	6	B	SYSTEM 13 MELTER PRESSURE, LEVEL, AND POUR CONTROLS	3217
H-2-123150	7	B	SYSTEM 13 MELTER TV CAMERA COOLING AND CLEANING	3217
H-2-123150	8	B	SYSTEM 13 POWER AND CONTROL FOR MELTER ELECTRODES	3217
H-2-123150	9	B	SYSTEM 13 POWER AND CONTROL FOR MELTER ELECTRODES	3217
H-2-123150	10	B	SYSTEM 13 DRAIN VALVE HEATERS	3217
H-2-123150	11	B	SYSTEM 13 CCTV CAMERA AND DRAIN VALVE HEATER CONTROLS	3217
H-2-123150	12	B	SYSTEM 13 RISER AND POUR SPOUT HEATER CONTROLS	3217
H-2-123150	13	B	SYSTEM 13 REFRACTORY COLD-FACE TEMP. MEASUREMENT & MELTER DOME HEATERS	3217
H-2-123150	14	B	SYSTEM 13 MELTER DOME HEATERS	3217
H-2-123150	15	B	SYSTEM 13 MELTER DOME HEATERS	3217
H-2-123150	16	B	SYSTEM 13 MELTER DOME HEATERS	3217

PIPING AND INSTRUMENT DIAGRAMS
BOOK 1 OF 3
TABLE OF CONTENTS

DRAWING NO.	SH NO	REV	DRAWING TITLE	CWBS NO
H-2-123150	17	B	SYSTEM 13 MELTER COOLING WATER FOR TOP AND BOTTOM HEADS AND SHELL	3217
H-2-123150	18	B	SYSTEM 13 MELTER COOLING WATER FOR TOP AND BOTTOM HEADS AND SHELL	3217
H-2-123150	19	B	SYSTEM 13 PROCESS COOLING WATER FOR FEED NOZZLES	3217
H-2-123150	20	B	SYSTEM 13 MELTER COOLING WATER FOR ELECTRODES, PADS, & DOME HEATER TRANS.	3217
H-2-123150	21	B	SYSTEM 13 MELTER COOLING WATER FOR DOME HEATERS AND BOTTOM PAD	3217
H-2-123150	22	B	SYSTEM 13 MELTER ARGON SUPPLY	3217
H-2-123151	1	C	SYSTEM 16A FCDC SERVICE HEADERS	3219
H-2-123151	2	C	SYSTEM 16A FCDC NOZZLE FEED PUMP #1	3219
H-2-123151	3	C	SYSTEM 16A FCDC NOZZLE FEED PUMP #2	3219
H-2-123151	4	C	SYSTEM 16A FCDC NOZZLE FEED PUMP #3	3219
H-2-123151	5	C	SYSTEM 16A FCDC NOZZLE FEED PUMP #4	3219
H-2-123151	6	C	SYSTEM 16A FCDC NOZZLE FEED PUMP #5	3219
H-2-123151	7	C	SYSTEM 16A FCDC NOZZLE FEED PUMP #6	3219
H-2-123151	8	C	SYSTEM 16A FCDC NOZZLE FEED PUMP #7	3219
H-2-123151	9	C	SYSTEM 16A FCDC RIBBON NOZZLE FEED PUMP	3219
H-2-123151	10	C	SYSTEM 16A FCDC #1 SPRAY NOZZLES	3219
H-2-123151	11	C	SYSTEM 16A FCDC #1 GRAPPLE AND RINSE CYCLE	3219
H-2-123151	12	C	SYSTEM 16A FCDC #1 SPENT FRIT HANDLING AND CCTV	3219
H-2-123151	13	C	SYSTEM 16B FCDC #2 SPRAY NOZZLES	3219
H-2-123151	14	C	SYSTEM 16B FCDC #2 GRAPPLE AND RINSE CYCLE	3219
H-2-123151	15	C	SYSTEM 16B FCDC #2 SPENT FRIT HANDLING AND CCTV	3219
H-2-123151	16	C	SYSTEM 16A PRELIMINARY DECON WATER WASH	3219
H-2-123152	1	C	SYSTEM 17 INNER CANISTER CLOSURE AND TEMPERATURE SURVEY STATION	3219
H-2-123152	2	C	SYSTEM 17 INNER CANISTER CLOSURE LEAK TEST STATION	3219
H-2-123152	3	C	SYSTEM 17 WTC ICC PRESS AND CANISTER TROLLEY	3219
H-2-123152	4	C	SYSTEM 17 WTC PLUG WELDER	3219
H-2-123152	5	C	SYSTEM 17 POWER PACK COOLING AND WELDER NITROGEN SUPPLY	3219
H-2-123160	1	C	SYSTEM 21 CRANE DECON FEED TANK (ACID)	3220

PIPING AND INSTRUMENT DIAGRAMS
BOOK 1 OF 3
TABLE OF CONTENTS

DRAWING NO.	SH NO	REV	DRAWING TITLE	CWBS NO
H-2-123160	2	C	SYSTEM 21 CRANE DECON FEED TANK (CAUSTIC)	3220
H-2-123160	3	C	SYSTEM 21 REDC UTILITIES	3220
H-2-123160	4	C	SYSTEM 21 REDC UTILITIES	3220
H-2-123160	5	C	SYSTEM 21 REDC UTILITIES	3220
H-2-123160	6	C	SYSTEM 21 REDC UTILITIES	3220
H-2-123160	7	C	SYSTEM 21 REDC UTILITIES	3220
H-2-123160	8	C	SYSTEM 21 CDMC UTILITIES	3220
H-2-123160	9	C	SYSTEM 21 CDMC UTILITIES	3220
H-2-123160	10	C	SYSTEM 21 CDMC UTILITIES	3220
H-2-123160	11	C	SYSTEM 21 CDMC UTILITIES	3220
H-2-123160	12	C	SYSTEM 21 CDMC UTILITIES	3220
H-2-123160	13	C	SYSTEM 21 CELL DECON	3220
H-2-123160	14	C	SYSTEM 21 CPC AND ANALYTICAL FACILITY DECON	3220
H-2-123160	15	C	SYSTEM 21 MSM DECON GLOVE BOXES	3220
H-2-123161	1	C	SYSTEM 23 CDC SMEAR TEST STATION	3220
H-2-123161	3	C	SYSTEM 23 EMPTY CANISTER ENTRY TUNNEL TRANSFER CAR	3220
H-2-123161	5	C	SYSTEM 23 MC/CDC TUNNEL CANISTER TRANSFER CAR	3220
H-2-123161	6	C	SYSTEM 23 EXIT TUNNEL TURNTABLE	3220
H-2-123170	1	C	SYSTEM 63 LIQUID SAMPLING SYSTEM	3218
H-2-123170	2	C	SYSTEM 63 LIQUID SAMPLING FLUSH WATER & PLANT AIR HEADERS	3218
H-2-123170	3	C	SYSTEM 63 SAMPLE & ANALYTICAL CELLS DECONTAMINATION SYSTEM	3218
H-2-123170	4	C	SYSTEM 63 SAMPLE CELL DRAIN SYSTEM	3218
H-2-123170	5	C	SYSTEM 63 MOG/PVV SBS OUTLET GAS SAMPLERS	3218
H-2-123170	6	C	SYSTEM 63 HEME OUTLET GAS SAMPLER	3218
H-2-123170	7	C	SYSTEM 63 MOG HEPA FILTER OUTLET GAS SAMPLER	3218
H-2-123170	8	C	SYSTEM 63 PVV HEPA FILTER OUTLET GAS SAMPLER	3218
H-2-123170	10	C	SYSTEM 63 WHT OUTLET GAS SAMPLER	3218
H-2-123170	11	C	SYSTEM 63 GLASS SAMPLE RABBIT SYSTEM	3218
H-2-123170	13	C	SYSTEM 63 CELL SAMPLE RABBIT SYSTEM	3218
H-2-123171	1	C	SYSTEM 64 ANALYTICAL CELL #A	3218
H-2-123171	2	C	SYSTEM 64 ANALYTICAL CELL #B	3218
H-2-123171	3	C	SYSTEM 64 ANALYTICAL CELL #C	3218
H-2-123171	4	C	SYSTEM 64 ANALYTICAL CELL #D	3218
H-2-123171	5	C	SYSTEM 64 ANALYTICAL CELL #E	3218
H-2-123171	6	C	SYSTEM 64 ANALYTICAL CELL #F	3218

PIPING AND INSTRUMENT DIAGRAMS
BOOK 1 OF 3
TABLE OF CONTENTS

DRAWING NO.	SH NO	REV	DRAWING TITLE	CWBS NO
H-2-123171	7	C	SYSTEM 64 ANALYTICAL CELL #G	3218
H-2-123171	8	C	SYSTEM 64 ANALYTICAL CELL #8	3218
H-2-123171	9	C	SYSTEM 64 LABORATORY HOODS	3218
H-2-123171	10	C	SYSTEM 64 AT FLAME HOOD AND ICP & AA HOOD	3218
H-2-123171	11	C	SYSTEM 64 DECONTAMINATION HOOD SAMPLE RECEIVING GLOVE BOX & LAB SINKS	3218
H-2-123171	12	C	SYSTEM 64 HOT ICP GLOVE BOX	3218
H-2-123171	13	C	SYSTEM 64 SERVICE ROOMS HOODS	3218
H-2-123171	14	C	SYSTEM 64 PROCESS WATER ANALYTICAL AREA DISTRIBUTION	3218
H-2-123171	15	C	SYSTEM 64 HOT WATER ANALYTICAL AREA DISTRIBUTION	3218
H-2-123171	16	C	SYSTEM 64 TEMPERED WATER ANALYTICAL AREA DISTRIBUTION	3218
H-2-123171	17	C	SYSTEM 64 DEIONIZED WATER ANALYTICAL AREA DISTRIBUTION	3218
H-2-123171	18	C	SYSTEM 64 PLANT AIR SYSTEM & INSTRUMENT AIR ANALYTICAL AREA DISTRIBUTION	3218
H-2-123171	19	C	SYSTEM 64 GAS CYLINDERS ANALYTICAL AREA DISTRIBUTION	3218
H-2-123171	20	C	SYSTEM 64 GAS CYLINDERS & LIQUID NITROGEN ANALYTICAL AREA DISTRIBUTION	3218
H-2-123171	21	C	SYSTEM 64 HOODS & GLOVE BOXES DRAIN SYSTEM	3218
H-2-123171	22	C	SYSTEM 64 COLD CHEMICAL LABORATORY HOODS AND SINK	3218

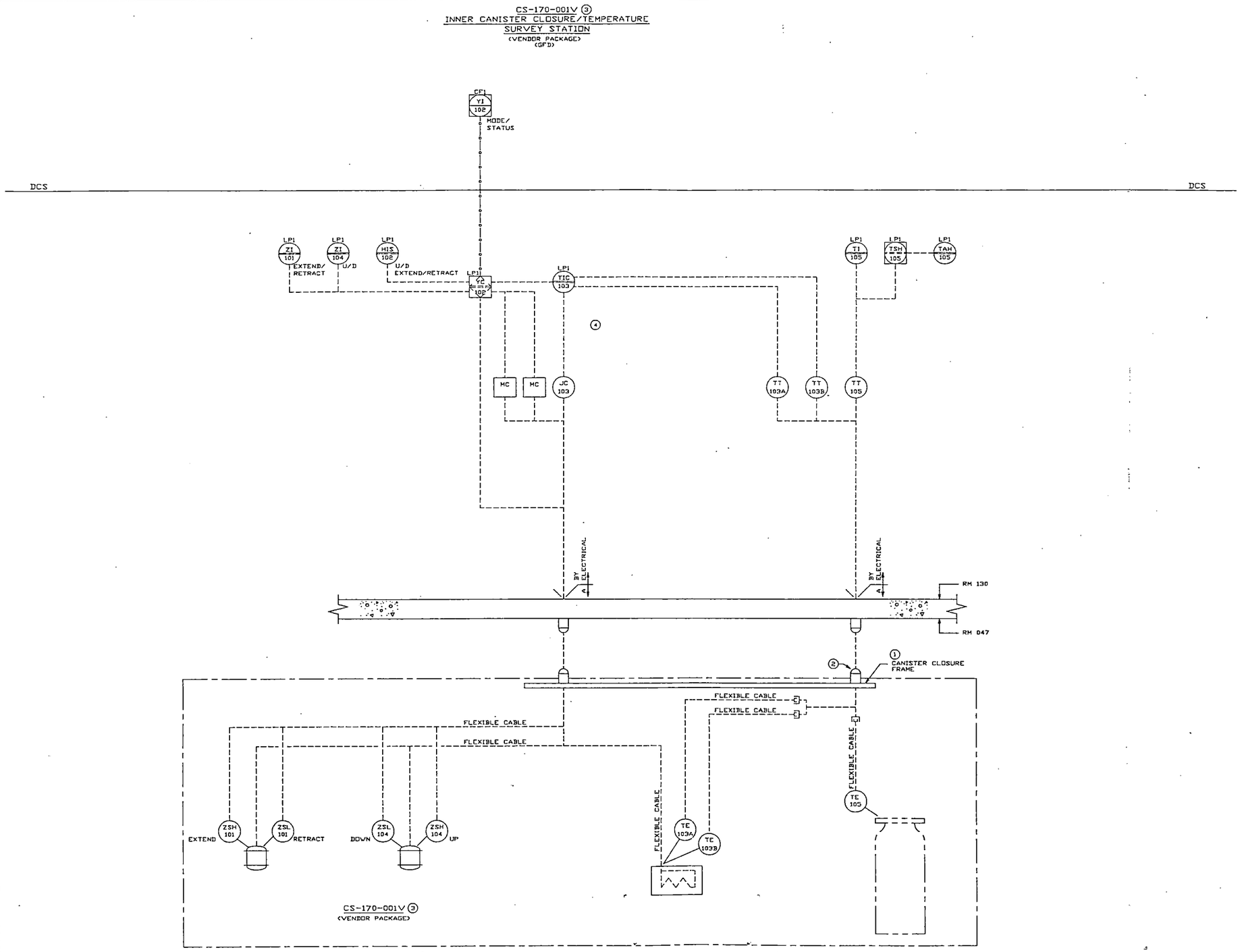

GENERAL NOTES:

A. REFER TO DRAWING H-2-123001 "LEGEND OF SYMBOLOGY FOR PROCESS FLOW AND PIPING AND INSTRUMENT DIAGRAMS" FOR AN EXPLANATION OF SYMBOLS AND ABBREVIATIONS.

B. ALL PROCESS ITEMS ON THIS DRAWING ARE SYSTEM 17 UNLESS MARKED OTHERWISE.

C. THREE DIGIT INSTRUMENT TAG NUMBERS ARE PREFIXED WITH 170 UNLESS A SIX DIGIT NUMBER IS SHOWN TO INDICATE ANOTHER SYSTEM.

D. FOR DEFINITION OF LOGIC CONTAINED IN DIAMOND SYMBOLS AND HEX SYMBOLS ⬢ ⬡, SEE PROCESS CONTROL DESCRIPTION (PCD) SPECIFICATION 9-595-C-17500-DS-170.

E. ALL WALL PENETRATION BLOCK VALVES SHALL BE MINIMUM DISTANCE FROM THE WALL.

F. FOR A LISTING OF VITRIFICATION BUILDING ROOM NUMBERS AND NAMES, REFER TO DRAWING H-2-118020.

G. SYSTEM 17 IS SAFETY CLASS 3.

NOTES:

① THE CANISTER CLOSURE FRAME IS ALSO SHOWN ON DRAWING H-2-123152-2 TO SHOW ADDITIONAL CONNECTORS.

② THIS CONNECTOR IS SHARED BY: TE-201, PT-202, AND PT-210, WHICH ARE SHOWN ON DRAWING H-2-123152-2.

③ THE ICC TEMPERATURE SURVEY STATION ALSO INCLUDES THE LEAK TEST ASSEMBLY SHOWN ON DRAWING H-2-123152-2.

④ LOCAL PANEL INSTRUMENTATION AND POWER CONTROLLER ARE PROVIDED BY THE VENDOR OF CS-170-001V.

REV.NO.	DATE	REVISION DESCRIPTION	APPROVAL INITIALS

ENGINEERING RELEASE
REV. ____ DATE ____
ERD ____

		DATE
SIGNATURE		
NRC APPROVAL BY		
PROJ. MGR.	R.GIBBONS	
QA ENGR.	O.CHAVLA	
ENGINEERING MGR.	F.BROOKS	
SYSTEMS MGR.	B.J.RECKHAN	7/13/90
TASK LEADER	A.RUSSELL	7-19-90
T.E.T. TASK LEADER	R.TAGNEY	7-19-90
DESIGNER	D.BENAC	7-17-90
CHECKED	J.ICHKHAN	7-17-90
DRAWN	M.KHOURI	
CLASSIFICATION	NONE	NOT REQ'D

U.S.DEPARTMENT OF ENERGY
Richland Operations Office
DE - AC06-86RL10838

FLUOR DANIEL, INC.
ADVANCED TECHNOLOGY DIVISION

PIPING & INSTRUMENT DIAGRAM
SYSTEM 17
INNER CANISTER CLOSURE AND
TEMPERATURE SURVEY STATION

PROJECT TITLE: HANFORD WASTE VITRIFICATION PLANT

PROJECT	FLUOR CONTRACT NO.	CVDS NO.
9-595	8457	3219

SCALE	BLDG. NO.	DCKS NO.
NONE		

DRAWING NUMBER	SHEET	OF	REV.
H-2-123152	1	3	C

AA7FD036 / MK
13 JUL 90

6621148109

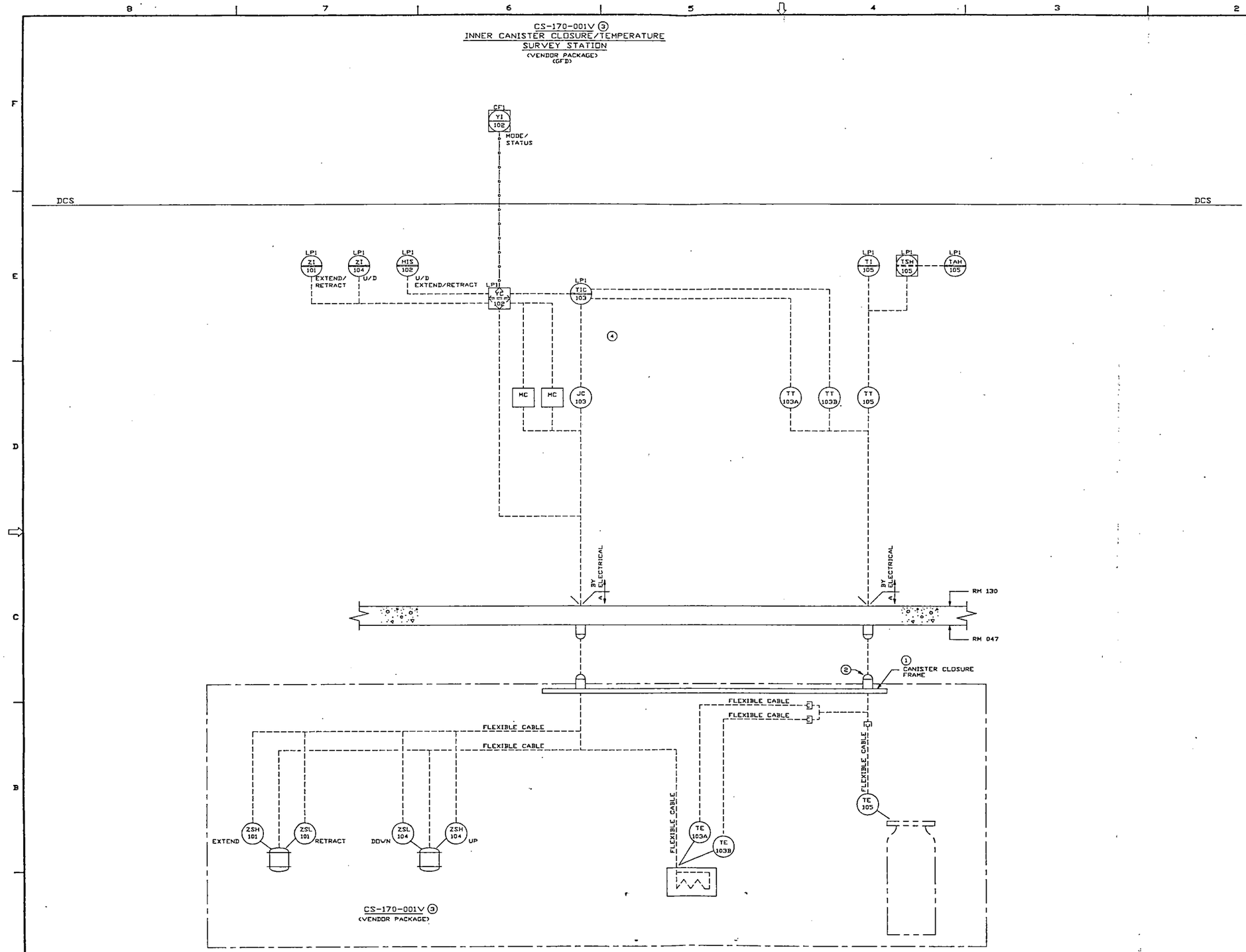

GENERAL NOTES:

A. REFER TO DRAWING H-2-123001 "LEGEND OF SYMBOLOGY FOR PROCESS FLOW AND PIPING AND INSTRUMENT DIAGRAMS" FOR AN EXPLANATION OF SYMBOLS AND ABBREVIATIONS.

B. ALL PROCESS ITEMS ON THIS DRAWING ARE SYSTEM 17 UNLESS MARKED OTHERWISE.

C. THREE DIGIT INSTRUMENT TAG NUMBERS ARE PREFIXED WITH 170 UNLESS A SIX DIGIT NUMBER IS SHOWN TO INDICATE ANOTHER SYSTEM.

D. FOR DEFINITION OF LOGIC CONTAINED IN DIAMOND SYMBOLS AND HEX SYMBOLS, ⊠ ⬡ SEE PROCESS CONTROL DESCRIPTION (PCD): SPECIFICATION B-595-C-17500-DS-170.

E. ALL WALL PENETRATION BLOCK VALVES SHALL BE MINIMUM DISTANCE FROM THE WALL.

F. FOR A LISTING OF VITRIFICATION BUILDING ROOM NUMBERS AND NAMES, REFER TO DRAWING H-2-118020.

G. SYSTEM 17 IS SAFETY CLASS 3.

NOTES:

① THE CANISTER CLOSURE FRAME IS ALSO SHOWN ON DRAWING H-2-123152-2 TO SHOW ADDITIONAL CONNECTORS.

② THIS CONNECTOR IS SHARED BY: TE-201, PT-202, AND PT-210, WHICH ARE SHOWN ON DRAWING H-2-123152-2.

③ THE ICC TEMPERATURE SURVEY STATION ALSO INCLUDES THE LEAK TEST ASSEMBLY SHOWN ON DRAWING H-2-123152-2.

④ LOCAL PANEL INSTRUMENTATION AND POWER CONTROLLER ARE PROVIDED BY THE VENDOR OF CS-170-001V.

REV NO	DATE	REVISION DESCRIPTION	APPROVAL INITIALS

ENGINEERING RELEASE
REV. _____ DATE _____
ERO _____

DESIGN AUTHORITY		DATE
QAC APPROVAL BY		
PROJ MGR	R.GIBBONS	
QA ENGR	D.CHAWLA	
ENGINEERING MGR	F.BROOKS	
SYSTEM MGR	B.J.RECKMAN	7/23/90
TASK LEADER	A.RUSSELL	7-19-90
I & C TASK LEADER	R.TAGNEY	7-19-90
PROJECT MGR	D.SENAC	7-19-90
CHECKED	J.ICHKHAN	7-17-90
DRAWN	M.KHOURI	
CLASSIFICATION	NONE	NOT REQ'D

U.S.DEPARTMENT OF ENERGY
Richland Operations Office
DE - AC06-86RL10838

FLUOR DANIEL, INC.
ADVANCED TECHNOLOGY DIVISION

PIPING & INSTRUMENT DIAGRAM
SYSTEM 17
INNER CANISTER CLOSURE AND TEMPERATURE SURVEY STATION

PROJECT TITLE: HANFORD WASTE VITRIFICATION PLANT

PROJECT	FLUOR CONTRACT NO	SYSTEM NO
B-595	8457	3219

SCALE	BLDG. NO	DRAWING NO	SHEET	OF	REV.
NONE			1	3	C

AA7FD036 / MK
13 JUL 90

9 0 1 1 8 8 4 1 4 0 0

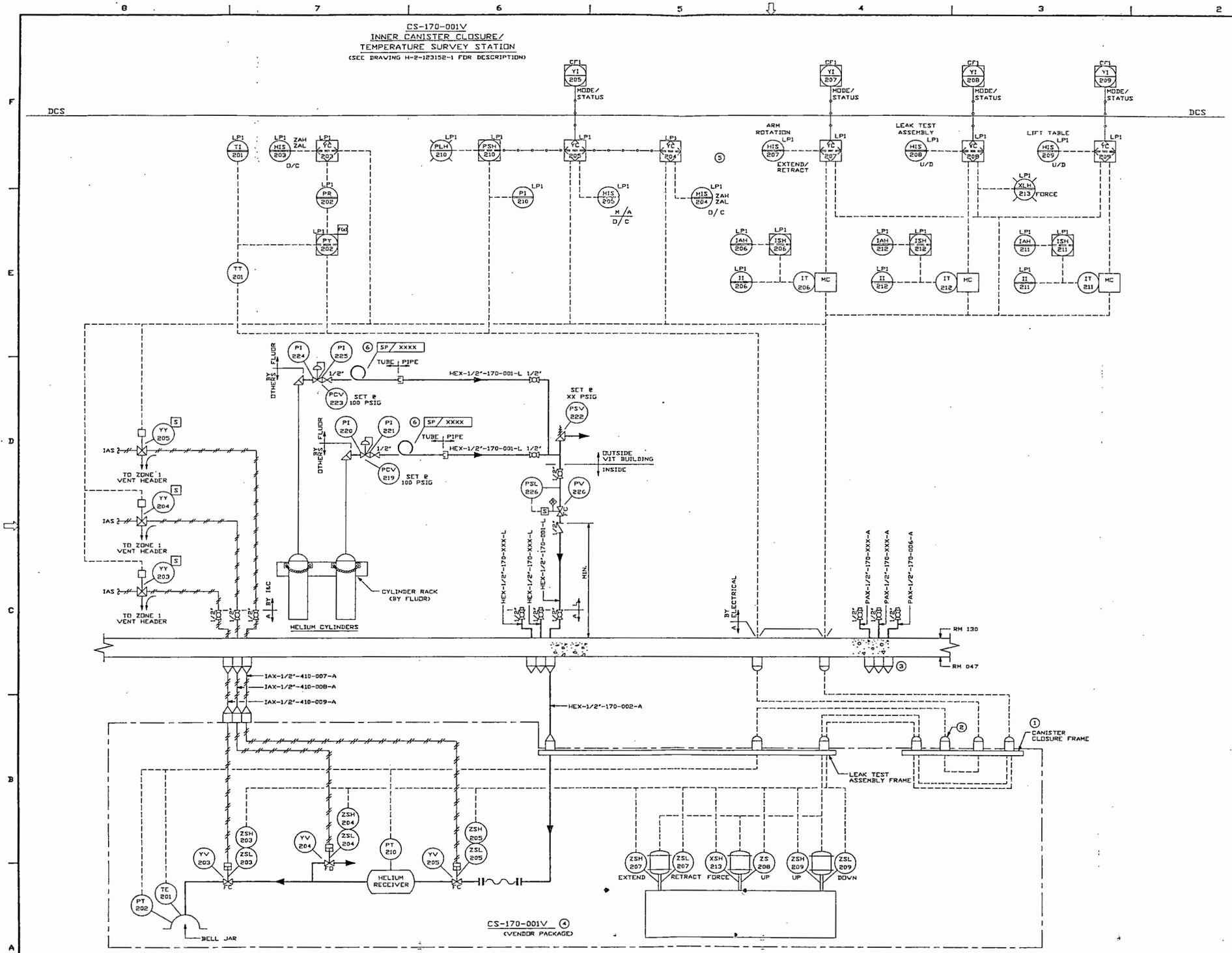

GENERAL NOTES:

A. FOR GENERAL NOTES REFER TO DRAWING H-2-123152-1.

NOTES:

1. THE CANISTER CLOSURE FRAME IS ALSO SHOWN ON DRAWING H-2-123152-1.
2. THIS CONNECTOR IS SHARED BY: TE-103A/B AND TE-105 SHOWN ON DRAWING H-2-123152-1.
3. PENETRATION FOR FUTURE AIR NEEDLE GUN NOZZLE.
4. THE LEAK TEST ASSEMBLY AND ASSOCIATED EQUIPMENT ARE PART OF THE ICC/TEMPERATURE SURVEY STATION SHOWN ON DRAWING H-2-123152-1.
5. LOCAL PANEL INSTRUMENTATION IS PROVIDED BY THE VENDOR OF CS-170-001V.
6. CYLINDER PIPING SHALL BE PROVIDED WITH A PIGTAIL.

REV. NO.	DATE	REVISION DESCRIPTION	APPROVAL INITIALS

ENGINEERING RELEASE
REV. ____ DATE ____
ERO ____

U.S. DEPARTMENT OF ENERGY
Richland Operations Office
DE - AC06-86RL10838

FLUOR DANIEL, INC.
ADVANCED TECHNOLOGY DIVISION

PIPING & INSTRUMENT DIAGRAM
SYSTEM 17
INNER CANISTER CLOSURE
LEAK TEST STATION

DESIGN NOTE		
PRELIM. NOR.	R.GIBBONS	
DIV. CHECK	D.CHAWLA	
ENGINEERING NOR.	F.BROOKS	
SYSTEMS NOR.	B.J.RECKMAN	7/23/90
TASK LEADER	A.RUSSELL	7-17-90
T & C TASK LEADER	R.TAGNEY	7-19-90
DESIGNATOR	D.BENAC	7-19-90
CHECKED	J.ICHKHAN	7-17-90
PROJECT TITLE	HANFORD WASTE VITRIFICATION PLANT	
PROJECT	B-595	
FLUOR CONTRACT NO.	8457	
CVRS NO.	3219	
SCALE	NONE	
DRAWING NUMBER	H-2-123152	
SHEET	2	
OF	3	
REV.	C	
CLASSIFICATION	NONE	
PT	NOT REQ'D	

AA7FD037 / LH
17 JUL 90

9 0 1 1 8 8 4 1 4 0 1

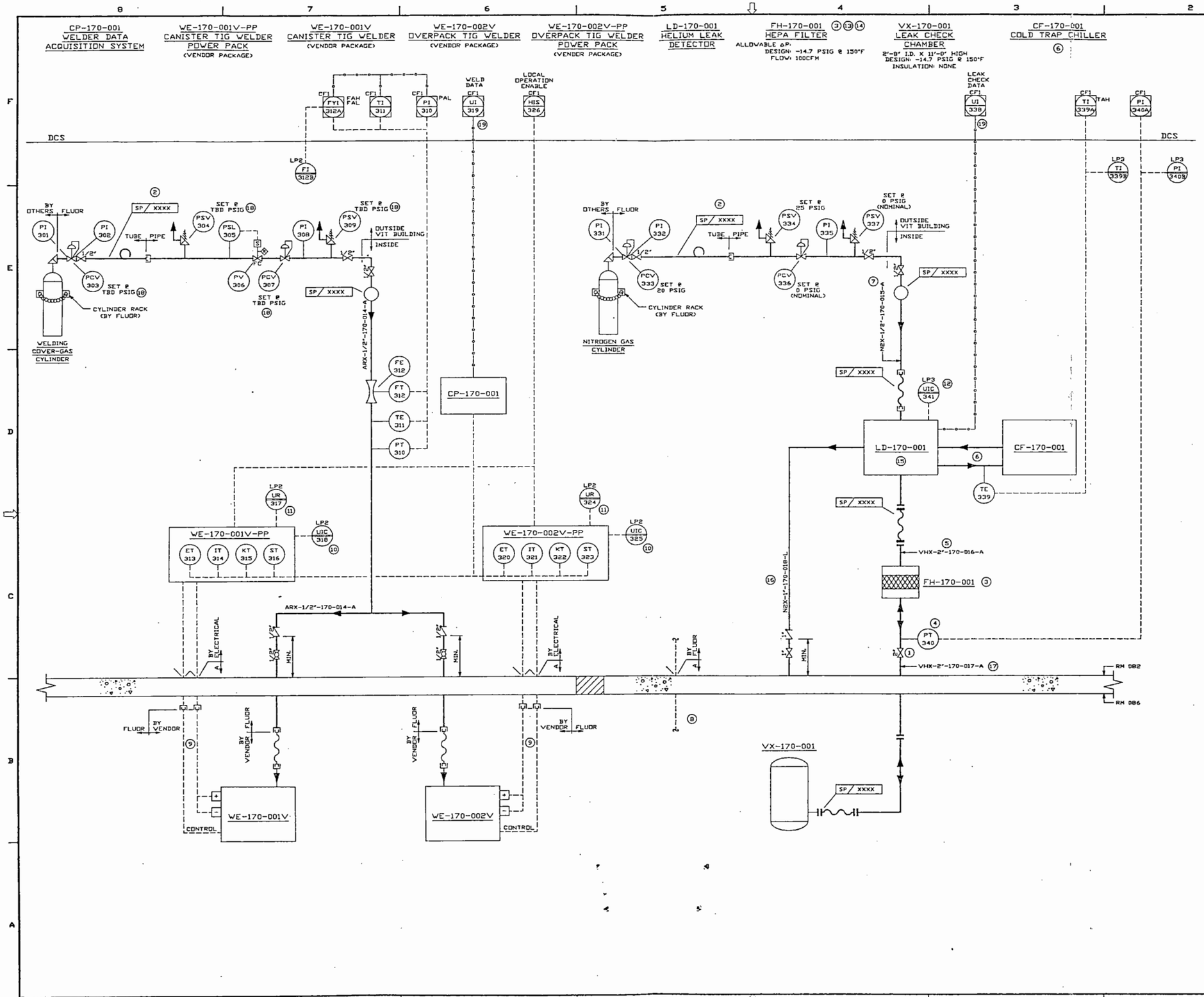

GENERAL NOTES:

A. FOR GENERAL NOTES REFER TO DRAWING H-2-123152-1.

NOTES:

1. MANUALLY OPERATED HIGH VACUUM GATE VALVE.
2. CYLINDER PIPING SHALL BE PROVIDED WITH A PIGTAIL.
3. THE HEPA FILTER SHALL BE RATED FOR HIGH VACUUM SERVICE.
4. PIRANI OR THERMOCOUPLE GAUGE.
5. LINE VHX-2"-170-016-A SHALL ATTACH TO THE SAMPLE PORT OF LD-170-001. THE LINE SHALL BE RATED FOR HIGH VACUUM SERVICE.
6. SUPPLY AND RETURN REFRIGERANT LINES SHALL BE SUPPLIED BY THE VENDOR OF CF-170-001.
7. LINE N2X-1/2"-170-015-A SHALL ATTACH TO THE BACKFILL PORT OF LD-170-001. THE LINE MUST BE FREE OF OIL AND DIRT.
8. ELECTRICAL PENETRATION FOR POWER TO IN-CELL CRANE.
9. FLEXIBLE CABLES.
10. PANEL MOUNTED CONTROLLERS SHALL BE PROVIDED BY THE WELDER VENDOR.
11. PANEL MOUNTED RECORDERS SHALL BE PROVIDED BY THE THE WELDER VENDOR.
12. PANEL MOUNTED CONTROLLER SHALL BE PROVIDED BY THE HELIUM LEAK DETECTOR VENDOR.
13. IN ORDER TO ACHIEVE ADEQUATE GAS CONDUCTANCE, THE HEPA FILTER'S FLOW IS SIZED LARGER THAN THE LEAK DETECTOR PUMP'S FLOW.
14. ALLOWABLE ΔP DOES NOT APPLY TO THIS PROCESS.
15. THE LEAK DETECTOR VENDOR SHALL SUPPLY AN EXHAUST FILTER ON THE DETECTOR'S MECHANICAL-PUMP EXHAUST TO REMOVE OIL VAPOR.
16. LINE N2X-1"-170-018-L SHALL ATTACH TO THE MECHANICAL-PUMP EXHAUST OF LD-170-001.
17. LINE VHX-2"-170-017-A SHALL USE CONFLAT-TYPE METAL SEAL FLANGES AND BE RATED FOR HIGH VACUUM SERVICE.
18. PRESSURE SETTINGS WILL BE DETERMINED IN DETAILED DESIGN.
19. UI-170-319 AN UI-170-338 SHALL INCLUDE RECORDING PROVISIONS PER QUALIFICATION REQUIREMENTS.

REV. NO.	DATE	REVISION DESCRIPTION	APPROVAL INITIALS

ENGINEERING RELEASE
REV. ____ DATE ____
ERO ____

U.S. DEPARTMENT OF ENERGY
Richland Operations Office
DE - AC06-86RL10838

FLUOR DANIEL, INC.
ADVANCED TECHNOLOGY DIVISION

PIPING & INSTRUMENT DIAGRAM
SYSTEM 17
TIG WELDERS AND
LEAK CHECK EQUIPMENT

PROJECT TITLE: HANFORD WASTE VITRIFICATION PLANT

PROJECT	B-595
FLUOR CONTRACT NO.	8457
ENGR NO.	3219
SCALE	NONE
DRAWN	F.HOLLSTEIN
CLASSIFICATION	NONE
DRAWING NUMBER	H-2-123152
SHEET	3
OF	3
REV.	C

AA7FD345 / MK
13 JUL 90

9 0 1 1 8 8 4 1 4 0 2