START

0029635

15

Mr. John Grantham
State of Washington
Department of Ecology
Nuclear & Mixed Waste Program
P.O. Box 47600
Olympia, WA 98504-8711

FLUOR DANIEL, INC.

Date: October 15, 1992

Reference: Hanford Waste Vitrification Plant
DOE Contract DE-AC06-86RL10838
Fluor Contract 8457

Transmittal No.: WDOE-236

Dear Mr. Grantham:

TRANSMITTAL

We enclose 2 copies of the items listed below. These are issued per US-DOE request.

Response due to Fluor: N/A
Responds to: N/A

NUMBER	REV	DATE	TITLE
SEE TRANSMTITTAL ATTACHMENT			PIPING AND INSTRUMENTATION DIAGRAMS AND TABLE OF CONTENTS
CONTROLLED COPIES: 25 & 26			PLEASE REMOVE OLD REVISIONS AND TABLE OF CONTENTS FROM YOUR P&ID MANUAL AND REPLACE WITH THE ATTACHED REVISIONS.
			TO ACKNOWLEDGE RECEIPT OF THE DOCUMENTS LISTED ABOVE, PLEASE SIGN AND DATE A COPY OF THIS TRANSMITTAL FORM AND MAIL TO: FLUOR DANIEL HWVP - EDC - 513J 3333 MICHELSON DRIVE IRVINE, CA 92730

9312975.1481

Distribution:
Reference:FRP-591, FUP-257
R. L. Long: DOE-RL W/0
VPO/AME Corresp Cntrl Cntr, MSIN A5-10
(SYSTEM 20B & 20C),w/0
Environmental Data Management Center
(MSIN H4-22)w/1 #31
D. Duncan, US EPA, Region X w/0

Very truly yours,

Rosalie Cadenas for
R. S. Poulter
Project Director

RSP:KMC:ts

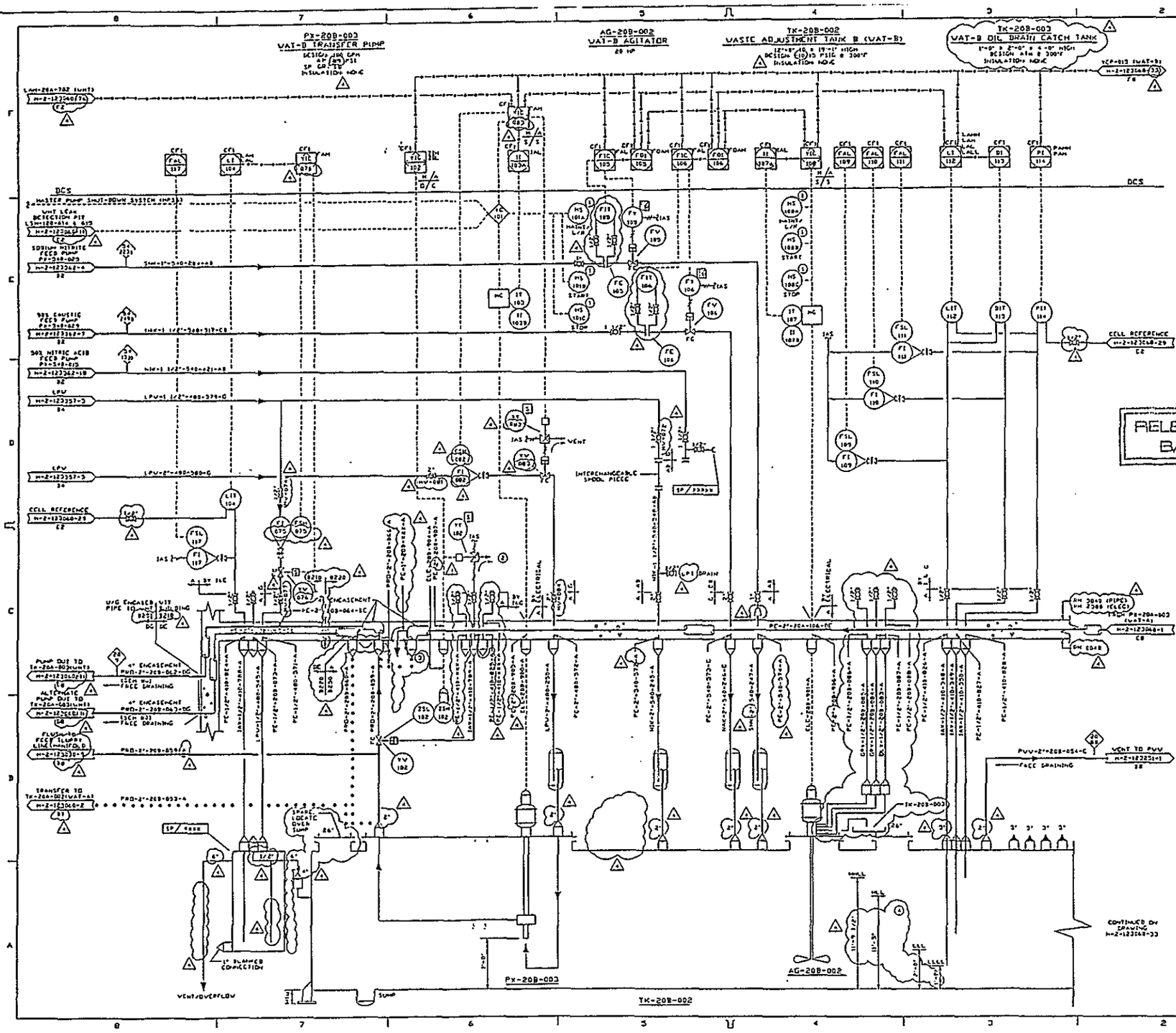

GENERAL NOTES:

A. FOR GENERAL NOTES REFER TO DRAWING H-2-123060-1.

NOTES:

1. HANDSWITCH LOCATED AT MCC.
2. TO SOLENOID VALVE AIR VENT HEADER, SEE DRAWING H-2-123364-2.
3. LEAK DETECTOR ON LOW POINT OF OUTER PIPE. OUTLET SHALL BE VISIBLE FROM CCTV.
4. LEVELS ARE SPECIFIED FROM BOTTOM CENTER OF TANK.

RELEASED FOR PROJECT BASELINE CONTROL

OCT 13 1992

SAFETY CLASS 3

REV	DATE	DESCRIPTION				
4	10/13/92	ADDED AGITATOR LUBE SYSTEM PER CR-0663. ADDED INSTRUMENT ROOT VALVES PER CR-0544. REVISED MINIMUM 1" PURGE TO 2" INCLUDING INCREASING THE JUMPER AND PENETRATION SIZE FROM 1" TO 2". PER CR-0676. REVISED LPW TAG NUMBERS PER CR-0702. ADDED CWBS PACKAGE BREAKS. REVISED VENT/OVERFLOW POT. SHOWED SPARE 25" NOZZLE OVER SUMP. ADDED TANK LEVELS. REVISED OR ADDED LINE AND DWG NOTES. REVISED VAT-B DESIGN PRESSURE. REVISED TRANSFER PUMP A/P. REVISED LEAK DETECTION PIPE.	RR	SPS	[illegible]	[illegible]
3	11/14/91	ADDED LOCAL HANDSWITCHES TO MOTORS PER CR-0480. CHANGED PIPING SPECS. AND ADDED FLUSH AND DRAIN VALVES. ADDED NOTE 2. ADDED SIZE TO VENT/OVERFLOW LINES, AND CHANGED TRANSMITTERS TO INDICATING TYPE PER CR-0572	CR	KHC/HF	RPD	HF/RT
			CRP/JLS	HJH	DPC	RNG
2	9/30/91	ADDED LINE NOS. CHANGED SPEC ON LINE 246. SHOWED SPARE NOZZLES. ADDED ENCASEMENT AND LEAK DETECTION TO ENCASED PIPE. ADDED MOTOR HANDSWITCH. RELEASED FOR PROJECT BASELINE CONTROL PER CR-0480	HF	VP	RGT	HF
			CRP	FGB	DPC	RNG
1	2/28/91	"RELEASED FOR PROJECT BASELINE CONTROL" WITHDRAWN PER CR-465	HF	VP	RGT	HF
			CRP	FGB	DPC	RNG
0	10/31/90	RELEASED FOR PROJECT BASELINE CONTROL PER CR MWMP-0443	HF	VP	RGT	HF
			CRP	FGB	DPC	RNG
00	08/16/90	RELEASED FOR DETAILED DESIGN	HF	VP	RGT	HF
			JJR	FS	DPC	RNG

ENGINEERING RELEASE
REV. ____ DATE ____
CRD ____

U.S. DEPARTMENT OF ENERGY
Richland Operations Office
DC - AC06-86RL10838

FLUOR DANIEL INC.
ADVANCED TECHNOLOGY DIVISION

PIPING & INSTRUMENT DIAGRAM
SYSTEM 20B
WASTE ADJUSTMENT TANK
(VAT-B)

HANFORD WASTE VITRIFICATION PLANT

R GIBBONS	6/16/90				
D CHAVLA	6/16/90				
F BROOKS	6/16/90				
B JRECKMAN	6/16/90				
H FELDON	6/16/90				
R TAGNEY	6/16/90				
H FELDON	6/16/90				
V PIERCE	6/15/90	3-595	R-57	3213	
L HOLLSTEIN	6/15/90	NONE			

NONE	NOT REQ'D	H-2-123060	32	34	4

AA7E0185 / CR
2 SEPT 92

9312975.1491

TRANSMITTAL ATTACHMENT

DRAWING NUMBER	SHT NO.	REV	DATE	DRAWING TITLE
H-2-123060	08	5	10/12/92	SYSTEM 20C REMOTE MAINTAINED SUMP PUMPS/JETS
H-2-123060	23	4	10/12/92	SYSTEM 20C WARM WASTE HEADER
H-2-123060	24	4	10/12/92	SYSTEM 20C WARM WASTE HEADER
H-2-123060	32	4	10/12/92	SYSTEM 20B WASTE ADJUSTMENT TANK (WAT-B)

9312975.1082

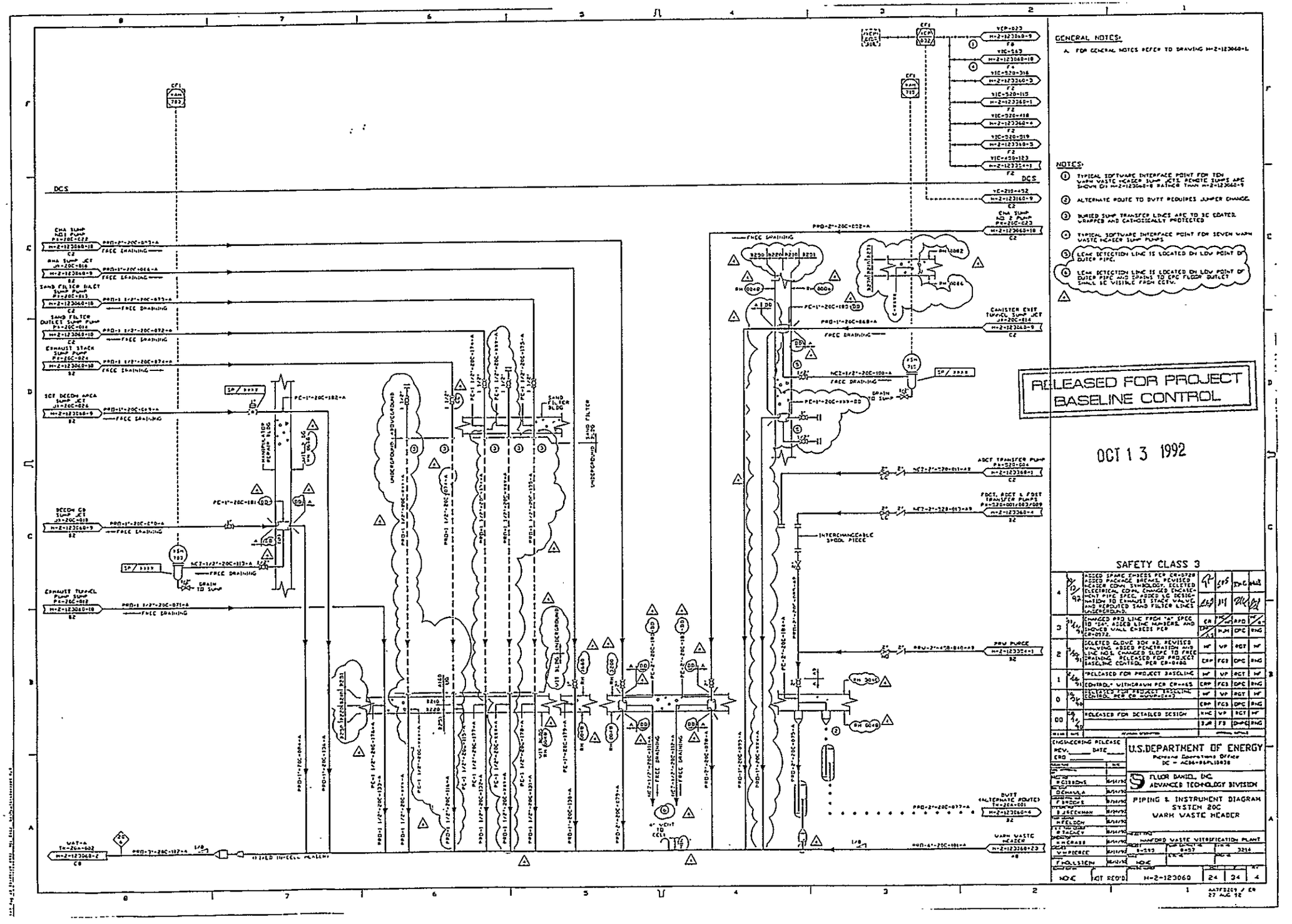

9312975.1490

PROCESS PIPING AND INSTRUMENT DIAGRAMS
VOLUME 1A
TABLE OF CONTENTS

DRAWING NO.	SH NO	REV	DRAWING TITLE	CWBS NO
** VOLUME NUMBER: 1A				
H-2-123001	01	3	LEGEND OF SYMBOLOGY FOR PROCESS FLOW AND PIPING AND INSTRUMENT DIAGRAMS	3201
H-2-123001	02	3	LEGEND OF SYMBOLOGY FOR PROCESS FLOW AND PIPING AND INSTRUMENT DIAGRAMS	3201
H-2-123001	03	3	LEGEND OF SYMBOLOGY FOR PROCESS FLOW AND PIPING AND INSTRUMENT DIAGRAMS	3201
H-2-123001	04	3	LEGEND OF SYMBOLOGY FOR PROCESS FLOW AND PIPING AND INSTRUMENT DIAGRAMS	3201
H-2-123001	05	3	LEGEND OF SYMBOLOGY FOR PROCESS FLOW AND PIPING AND INSTRUMENT DIAGRAMS	3201
H-2-123040	03	0	P&ID SYSTEM 11 FEED RECEIPT	6370
H-2-123040	04	0	P&ID SYSTEM 11 FEED RECEIPT	6370
H-2-123050	01	3	SYSTEM 11 RECEIPT AND LAG STORAGE TANK-A VOIDED DWG PER CR-0584	3211
H-2-123050	02	3	SYSTEM 11 RECEIPT AND LAG STORAGE TANK-A VOIDED DWG PER CR-0584	3211
H-2-123050	03	3	SYSTEM 11 RECEIPT AND LAG STORAGE TANK-A VOIDED DWG PER CR-0584	3210
H-2-123050	04	3	SYSTEM 11 RECEIPT AND LAG STORAGE TANK-B VOIDED DWG PER CR-0584	3211
H-2-123050	05	3	SYSTEM 11 RECEIPT AND LAG STORAGE TANK-B VOIDED DWG PER CR-0584	3211
H-2-123050	06	3	SYSTEM 11 RECEIPT AND LAG STORAGE TANK-B VOIDED DWG PER CR-0584	3211
H-2-123050	07	3	RLST INTERFACE WITH CHEMICAL PROCESS CELL SYSTEM 11A/B VOIDED DWG PER CR-0584	3211
H-2-123050	08	3	SYSTEM 11 RLST INTRA-AREA LINE LEAK DETECTION VOIDED DWG PER CR-0584	3211
H-2-123051	01	3	SYSTEM 12 SLURRY RECEIPT & ADJUSTMENT TANK (SRAT)	3212
H-2-123051	02	3	SYSTEM 12 SLURRY RECEIPT & ADJUSTMENT TANK (SRAT)	3212
H-2-123051	03	3	SYSTEM 12 SLURRY RECEIPT & ADJUSTMENT TANK (SRAT)	3212
H-2-123051	04	0	SYSTEM 12 SLURRY RECEIPT AND ADJUSTMENT TANK (SRAT)	3212
H-2-123051	05	0	SYSTEM 12 SLURRY MIX EVAPORATOR (SME)	3212
H-2-123051	06	3	SYSTEM 12 SLURRY MIX EVAPORATOR (SME)	3212
H-2-123051	07	3	SYSTEM 12 SLURRY MIX EVAPORATOR (SME)	3212
H-2-123051	08	3	SYSTEM 12 SLURRY MIX EVAPORATOR (SME)	3212
H-2-123051	09	0	SYSTEM 12 SPARE FEED PREPARATION TANK (FUTURE)	6320

931275.1083

9312975.1489

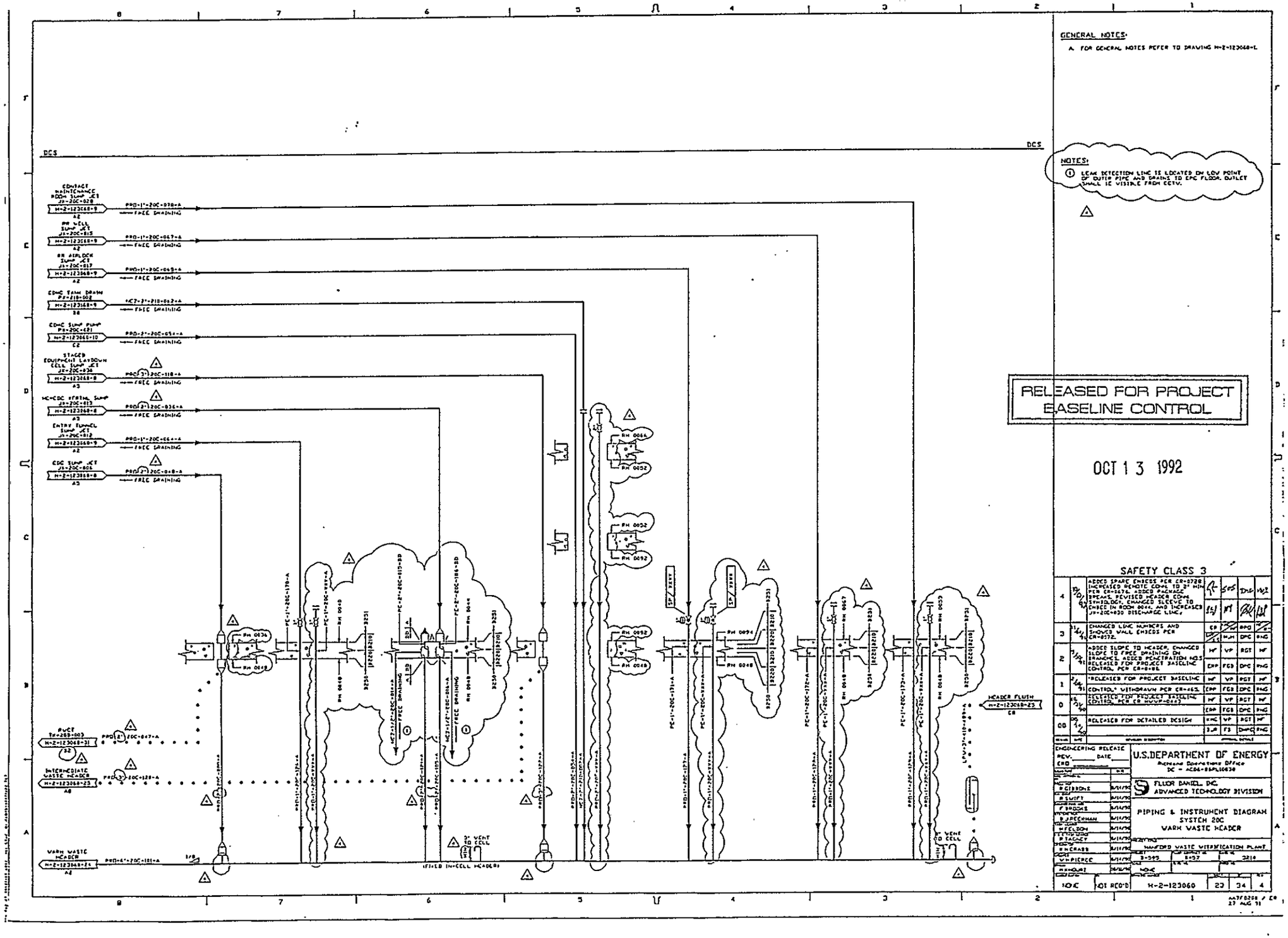

PROCESS PIPING AND INSTRUMENT DIAGRAMS
VOLUME 1A
TABLE OF CONTENTS

DRAWING NO.	SH NO	REV	DRAWING TITLE	CWBS NO
H-2-123060	01	3	SYSTEM 20A WASTE ADJUSTMENT TANK (WAT-A)	3213
H-2-123060	02	3	SYSTEM 20A WASTE ADJUSTMENT TANK (WAT-A)	3213
H-2-123060	03	3	SYSTEM 20A DECON WASTE TREATMENT TANK (DWTT)	3213
H-2-123060	04	3	SYSTEM 20A DECON WASTE TREATMENT TANK (DWTT)	3213
H-2-123060	05	3	SYSTEM 20A DECON WASTE TREATMENT TANK (DWTT)	3213
H-2-123060	06	5	SYSTEM 20A WASTE HOLD TANK (WHT)	3211
H-2-123060	07	4	SYSTEM 20A WASTE HOLD TANK (WHT)	3211
H-2-123060	08	5	SYSTEM 20C REMOTE MAINTAINED SUMP PUMPS/JETS	3214
H-2-123060	09	5	SYSTEM 20C CONTACT MAINTAINED SUMP JETS	3214
H-2-123060	10	4	SYSTEM 20C CONTACT MAINTAINED SUMP PUMPS	3214
H-2-123060	11	1	SYSTEM 20A WASTE HOLD TANK (WHT)	3212
H-2-123060	12	4	SYSTEM 20C SUMP INSTRUMENT/PIPING SUMMARY	3214
H-2-123060	13	0	SYSTEM 20A DECON WASTE TREATMENT TANK (DWTT)	3214
H-2-123060	14	1	SYSTEM 20C CONTACT MAINTAINED SUMP PUMPS	3214
H-2-123060	15	1	SYSTEM 20C SUMP INSTRUMENT / PIPING SUMMARY	3214
H-2-123060	16		NOT USED	
H-2-123060	17	3	SYSTEM 20A FILTER FEED TANK (FFT)	3213
H-2-123060	18	3	SYSTEM 20A FILTER FEED TANK (FFT)	3213
H-2-123060	19	3	SYSTEM 20A SBS FILTER	3213
H-2-123060	20	3	SYSTEM 20A SBS FILTER	3213
H-2-123060	21	3	SYSTEM 20A PRECOAT FEED TANK (PFT)	3213
H-2-123060	22	0	SYSTEM 20D RECYCLE WASTE COLLECTION TANK (RWCT)	
H-2-123060	23	4	SYSTEM 20C WARM WASTE HEADER	3214
H-2-123060	24	4	SYSTEM 20C WARM WASTE HEADER	3214
H-2-123060	25	3	SYSTEM 20C HOT/INTERMEDIATE WASTE HEADERS	3214
H-2-123060	26	3	SYSTEM 20C JET VENT HEADER	3214
H-2-123060	27	4	SYSTEM 20A WHT INTRA-AREA LINE LEAK DETECTION	3211
H-2-123060	28	3	SYSTEM 20D SLURRY MIX EVAPORATOR CONDENSATE TANK (SMECT)	3212
H-2-123060	29	3	SYSTEM 20D SLURRY MIX EVAPORATOR CONDENSATE TANK (SMECT)	3212
H-2-123060	30	3	SYSTEM 20D RECYCLE WASTE COLLECTION TANK (RWCT)	3212

9312975.1484

9312975.1488

SU-20C-001 CPC SUMP NO 1 — 2'-6" ID x 2'-6" DEEP, NOMINAL CAPACITY: 60 GAL (NOT SHOWN)
SU-20C-002 CPC SUMP NO 2 — 2'-6" ID x 2'-6" DEEP, NOMINAL CAPACITY: 60 GAL (NOT SHOWN)
SU-20C-003 CPC SUMP NO 3 — 2'-6" ID x 2'-6" DEEP, NOMINAL CAPACITY: 60 GAL (NOT SHOWN)
SU-20C-004 HC SUMP NO 1 — 2'-6" ID x 2'-6" DEEP, NOMINAL CAPACITY: 60 GAL (NOT SHOWN)
SU-20C-005 RCDC SUMP — 2'-6" ID x 3'-6" DEEP, NOMINAL CAPACITY: 110 GAL
SU-20C-006 CDC SUMP — 2'-6" ID x 3'-6" DEEP, NOMINAL CAPACITY: 110 GAL (NOT SHOWN)
SU-20C-013 HC-CDC TRANSFER TUNNEL SUMP — 2'-6" ID x 3'-6" DEEP, NOMINAL CAPACITY: 110 GAL (NOT SHOWN)
SU-20C-027 HC SUMP NO 2 — 2'-6" ID x 2'-6" DEEP, NOMINAL CAPACITY: 60 GAL (NOT SHOWN)
SU-20C-030 STAGED EQUIPMENT LAYDOWN CELL SUMP — 3'-6" ID x 3'-6" DEEP, NOMINAL CAPACITY: 300 GAL (NOT SHOWN)

JX-20C-001 CPC SUMP NO 1 JET — FLOW: 134 GPM, SPGR: 10, SUCTION LIFT: 3 FT OF H2O, DISCHARGE PRESSURE: 43.3 PSIG (NOT SHOWN)
JX-20C-002 CPC SUMP NO 2 JET — FLOW: 134 GPM, SPGR: 10, SUCTION LIFT: 3 FT OF H2O, DISCHARGE PRESSURE: 43.3 PSIG (NOT SHOWN)
JX-20C-003 CPC SUMP NO 3 JET — FLOW: 134 GPM, SPGR: 10, SUCTION LIFT: 3 FT OF H2O, DISCHARGE PRESSURE: 43.3 PSIG (NOT SHOWN)
JX-20C-004 HC SUMP NO 1 JET — FLOW: 134 GPM, SPGR: 10, SUCTION LIFT: 3 FT OF H2O, DISCHARGE PRESSURE: 43.3 PSIG (NOT SHOWN)
PX-20C-020 RCDC SUMP PUMP — DESIGN: 35 GPM, AP: 20 PSI, SPGR: 10, INSULATION: NONE
JX-20C-006 CDC SUMP JET — FLOW: 134 GPM, SPGR: 10, SUCTION LIFT: 3 FT OF H2O, DISCHARGE PRESSURE: 43.3 PSIG (NOT SHOWN)
JX-20C-013 HC-CDC TRANSFER TUNNEL SUMP JET — FLOW: 134 GPM, SPGR: 10, SUCTION LIFT: 3 FT OF H2O, DISCHARGE PRESSURE: 43.3 PSIG (NOT SHOWN)
JX-20C-027 HC SUMP NO 2 JET — FLOW: 134 GPM, SPGR: 10, SUCTION LIFT: 3 FT OF H2O, DISCHARGE PRESSURE: 43.3 PSIG (NOT SHOWN)
JX-20C-030 STAGED EQUIPMENT LAYDOWN CELL SUMP JET — FLOW: 71 GPM, SPGR: 10, SUCTION LIFT: 7 FT OF H2O, DISCHARGE PRESSURE: 216 PSIG (NOT SHOWN)

SU-20C-031 CPC SUMP NO 4 — 2'-6" ID x 2'-6" DEEP, NOMINAL CAPACITY: 60 GAL (NOT SHOWN)
SU-20C-032 CPC SUMP NO 5 — 2'-6" ID x 2'-6" DEEP, NOMINAL CAPACITY: 60 GAL (NOT SHOWN)
JX-20C-031 CPC SUMP NO 4 JET — FLOW: 134 GPM, SPGR: 10, SUCTION LIFT: 3 FT OF H2O, DISCHARGE PRESSURE: 43.3 PSIG (NOT SHOWN)
JX-20C-032 CPC SUMP NO 5 JET — FLOW: 134 GPM, SPGR: 10, SUCTION LIFT: 3 FT OF H2O, DISCHARGE PRESSURE: 43.3 PSIG (NOT SHOWN)

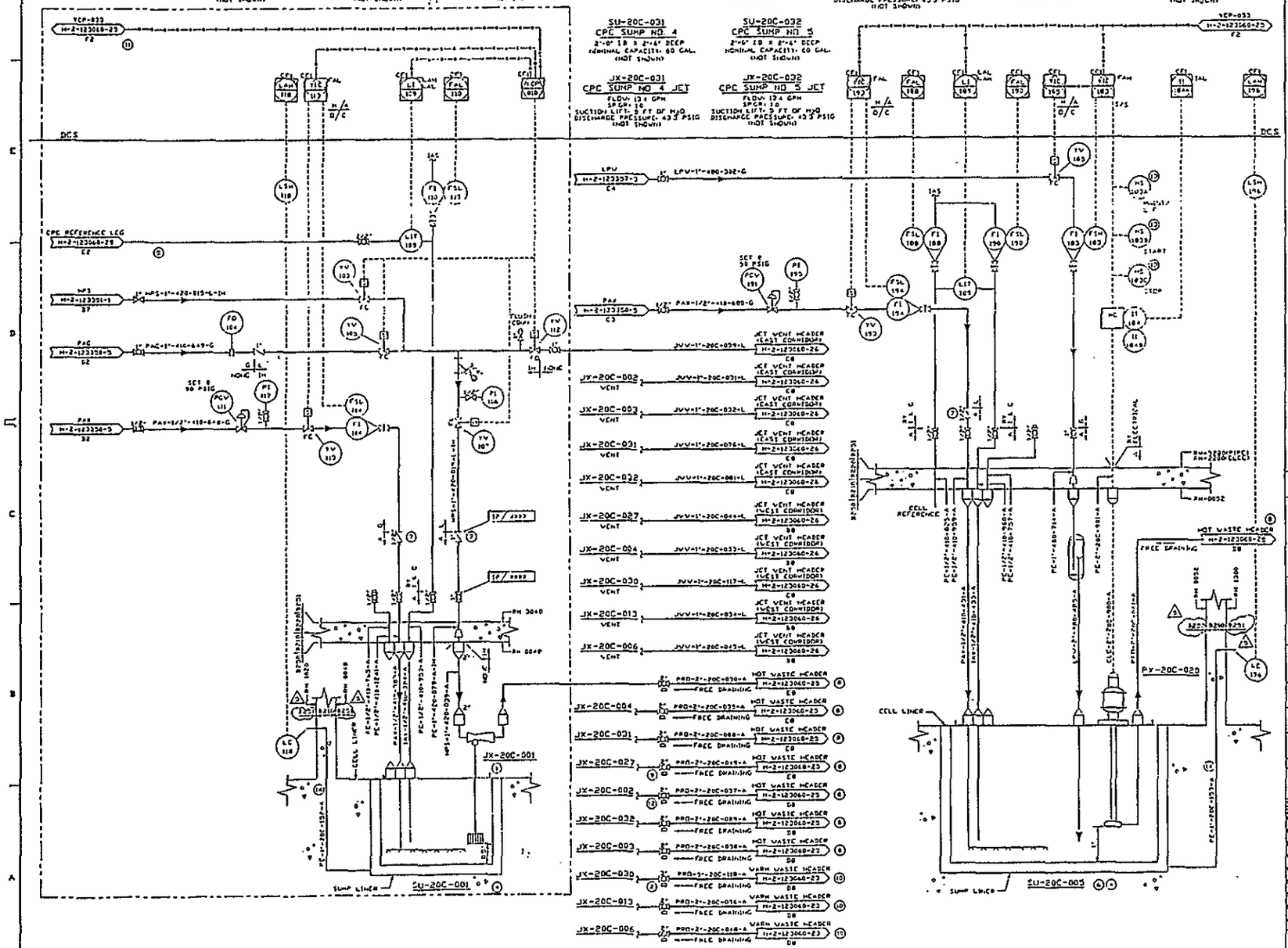

GENERAL NOTES:

A. FOR GENERAL NOTES REFER TO DRAWING H-2-123060-1.

RELEASED FOR PROJECT BASELINE CONTROL

OCT 13 1992

NOTES:

1. TYPICAL FOR TEN REMOTE MAINTAINED SUMP JETS. DASHED LINES INDICATE REPLICATED EQUIPMENT. PIPING AND INSTRUMENTATION NUMBERS APPLY TO CPC SUMP NO 1 ONLY. INFORMATION FOR ALL OTHER SUMPS IS SHOWN ON DRAWING H-2-123060-12 & 13.
2. HRV (H-2-123353-2) AND PRC (H-2-123352-2) PURGES DISCHARGE TO STAGED EQUIPMENT LAYDOWN CELL SUMP.
3. DELETED.
4. ALL SUMPS HAVE REMOVABLE STRAINER INSERTS TO FACILITATE REMOVAL OF ACCUMULATED SOLIDS.
5. THE STANDARD CPC CELL REFERENCE WILL PROVIDE INPUT TO THE LEVEL BUBBLERS IN SU-20C-001, 002, 003, 031 AND 032. A DEDICATED REFERENCE LEG IS PRESENT IN OTHER CELLS. REFERENCE LEG WILL BE A DUPLICATE OF THE LEVEL BUBBLER SUMP LEG.
6. THE RCDC SUMP TANK DRAIN AND RCDC TANK DRAIN PUMP PX-20C-001 ARE PIPED TO SU-20C-005. ALSO, LAYDOWN AREA DRAINS TO RCDC SUMP.
7. CHECK VALVE IS LOCATED MINIMUM DISTANCE FROM CELL WALL.
8. HOT WASTE HEADER DRAINS TO BUTT.
9. HOG CELL AND 335 CELL DRAIN TO HC SUMP NO.2.
10. WARM WASTE HEADER DRAINS TO VAT-4.
11. WARM WASTE HEATER JETS HAVE SOFTWARE LINK WITH WARM WASTE HEATER CONTROL PROGRAM XPC-20C-032 RATHER THAN HOT WASTE HEATER CONTROL PROGRAM XPC-20C-033.
12. DELETED.
13. HANDSWITCH LOCATED AT HCG.
14. MAXIMUM OF 2 TURNS WITH A TOTAL OF 180°.

SAFETY CLASS 3

REV	DATE	DESCRIPTION	DRN	CHK	APP	APP
3	6/29/92	MINOR REVISIONS FOR 221BA SLAB ONLY DESIGN DEVELOPMENT				
4	5/12/92	ADDED LINER AND LEAK DETECTION PER CR-0287. ADDED INSTR ROOT VALVES PER CR-0324. INCREASED PUMP CONN AND JET DISCHARGE LINES TO A MIN OF 2" PER CR-0376. INCREASED SUMP VOLUMES PER CR-0717 AND CR-0725. ADDED PACKAGE SHEAR L. INCREASED JX-20C-020 DISCHARGE LINE. ADDED INSULATION TO HPS PCS AND RE-VISED SUMP LINES TO ILLUSTRATE MECHANICAL ASSEMBLY PER CR-0766	ER	HF	HC	VVC
			BGJ	AKY	JGK	ASP
3	1/29/92	ADDED LOCAL HANDSWITCHES TO MOTORS PER CR-0660. ADDED TWO CPC SUMPS AND ASSOCIATED PIPING AND MODIFIED NOTES 1 AND 3 PER CR-0637. ADDED SP NUMBERS ON VALVES. ENHANCED LINE NUMBERS. DELETED NOTE 12. CHANGED TRANS-MITTERS TO INDICATING TYPE AND ADDED ASSUMPTION NOTE PER CR-0572	ER	HC / HF	RPD	HF / RT
			CRP / ALS	HJH	DPC	RHG
2	7/25/91	ADDED MOTOR HANDSWITCH. ADDED LINE & PENETRATION NO'S. CHANGED SLOPE TO FREE DRAINING. RELEASED FOR PROJECT BASELINE CONTROL PER CR-0490	HF	VP	RGT	HF
			EHP	FGB	DPC	RHG
1	5/14/91	*RELEASED FOR PROJECT BASELINE	HF	VP	RGT	HF
		CONTROL WITHDRAWN PER CR-0465.	EHP	FGB	DPC	RHG
0	9/24/90	RELEASED FOR PROJECT BASELINE CONTROL PER CR HOUP-0447	HF	VP	RGT	HF
			EHP	FGB	DPC	RHG
00	08/31/90	*RELEASED FOR DETAILED DESIGN	AHC	VP	RGT	HF
			BJR	FB	DHPC	RHG

ENGINEERING RELEASE
REV. ____ DATE ____
CPD ____

U.S. DEPARTMENT OF ENERGY
Richland Operations Office
DE - AC06-86RL10838

FLUOR DANIEL, INC.
ADVANCED TECHNOLOGY DIVISION

PIPING & INSTRUMENT DIAGRAM
SYSTEM 20C
REMOTE MAINTAINED
SUMP PUMPS/JETS

HANFORD WASTE VITRIFICATION PLANT

NONE | NOT PCD'D | H-2-123060 | 8 | 34 | 5

PROCESS PIPING AND INSTRUMENT DIAGRAMS
VOLUME 1A
TABLE OF CONTENTS

DRAWING NO.	SH NO	REV	DRAWING TITLE	CWBS NO
H-2-123060	31	3	SYSTEM 20D RECYCLE WASTE COLLECTION TANK (RWCT)	3212
H-2-123060	32	4	SYSTEM 20B WASTE ADJUSTMENT TANK (WAT-B)	3213
H-2-123060	33	3	SYSTEM 20B WASTE ADJUSTMENT TANK (WAT-B)	3212
H-2-123060	34	3	SYSTEM 20D RECYCLE WASTE COLLECTION TANK (RWCT)	3212
H-2-123061	01	3	SYSTEM 22 MELTER FEED TANK (MFT)	3212
H-2-123061	02	3	SYSTEM 22 MELTER FEED TANK (MFT)	3212
H-2-123061	03	3	SYSTEM 22 MELTER FEED TANK (MFT)	3212
H-2-123070	01	4	SYSTEM 58 DRY FRIT HANDLING	3210
H-2-123070	02	4	SYSTEM 58 FRIT SLURRY MAKEUP TANK (FSMT)	3210
H-2-123070	03	4	SYSTEM 58 PROCESS FRIT SLURRY FEED TANK (PFSFT)	3210
H-2-123070	04	4	SYSTEM 58 PROCESS FRIT SLURRY PUMP & FILTER	3210
H-2-123070	05	4	SYSTEM 58 DECON FRIT SLURRY FEED TANK (DFSFT)	3210
H-2-123070	06	4	SYSTEM 58 DECON FRIT SLURRY PUMP & FILTER	3210
H-2-123150	01	3	SYSTEM 13 POUR TURNTABLE	3217
H-2-123150	02	3	SYSTEM 13 POUR TURNTABLE	3217
H-2-123150	03	3	SYSTEM 13 DRAIN TURNTABLE	3217
H-2-123150	04	4	SYSTEM 13 MELTER THERMOCOUPLES FOR GLASS TEMPERATURE MEASUREMENT AND ELECTRODE CONTROL	3217
H-2-123150	05	3	SYSTEM 13 MELTER DRAIN VALVE AND DRAIN BELLOWS	3217
H-2-123150	06	4	SYSTEM 13 MELTER PRESSURE, LEVEL, AND POUR CONTROLS	3217
H-2-123150	07	4	SYSTEM 13 MELTER TV CAMERA COOLING AND CLEANING	3217
H-2-123150	08	4	SYSTEM 13 POWER AND CONTROL FOR MELTER ELECTRODES	3217
H-2-123150	09	4	SYSTEM 13 POWER AND CONTROL FOR MELTER ELECTRODES	3217
H-2-123150	10	4	SYSTEM 13 DRAIN VALVE HEATERS	3217
H-2-123150	11	4	SYSTEM 13 CCTV CAMERA AND DRAIN VALVE HEATER CONTROLS	3217
H-2-123150	12	4	SYSTEM 13 RISER AND POUR SPOUT HEATER	3217
H-2-123150	13	4	SYSTEM 13 REFRACTORY COLD-FACE TEMPERATURE MEASUREMENT AND MELTER DOME HEATERS	3217
H-2-123150	14	4	SYSTEM 13 MELTER DOME HEATERS	3217

PROCESS PIPING AND INSTRUMENT DIAGRAMS
VOLUME 1A
TABLE OF CONTENTS

DRAWING NO.	SH NO	REV	DRAWING TITLE	CWBS NO
H-2-123152	07	0	SYSTEM 17 FUTURE OVERPACK WELDER WALL PENETRATIONS	6320
H-2-123160	01	3	SYSTEM 21 CRANE DECON FEED TANK (ACID)	3220
H-2-123160	02	3	SYSTEM 21 CRANE DECON FEED TANK (CAUSTIC)	3220
H-2-123160	03	3	SYSTEM 21 REDC UTILITIES	3220
H-2-123160	04	3	SYSTEM 21 REDC UTILITIES	3220
H-2-123160	05	3	SYSTEM 21 REDC UTILITIES	3220
H-2-123160	06	3	SYSTEM 21 REDC UTILITIES	3220
H-2-123160	07	3	SYSTEM 21 REDC UTILITIES	3220
H-2-123160	08	3	SYSTEM 21 CDMC UTILITIES	3220
H-2-123160	09	3	SYSTEM 21 CDMC UTILITIES	3220
H-2-123160	10	3	SYSTEM 21 CDMC UTILITIES	3220
H-2-123160	11	3.	SYSTEM 21 CDMC UTILITIES	3220
H-2-123160	12	3	SYSTEM 21 CDMC UTILITIES	3220
H-2-123160	13	3	SYSTEM 21 CELL DECON	3220
H-2-123160	14	3	SYSTEM 21 CPC AND ANALYTICAL FACILITY DECON	3220
H-2-123160	15	3	SYSTEM 21 MSM DECON GLOVE BOX	3220

9812975.NB2

PROCESS PIPING AND INSTRUMENT DIAGRAMS
VOLUME 1A
TABLE OF CONTENTS

DRAWING NO.	SH NO	REV	DRAWING TITLE	CWBS NO
H-2-123150	15	4	SYSTEM 13 MELTER DOME HEATERS	3217
H-2-123150	16	4	SYSTEM 13 MELTER DOME HEATERS	3217
H-2-123150	17	4	SYSTEM 13 MELTER COOLING WATER FOR TOP AND BOTTOM HEADS AND SHELL	3217
H-2-123150	18	4	SYSTEM 13 MELTER COOLING WATER FOR TOP AND BOTTOM HEADS AND SHELL	3217
H-2-123150	19	3	SYSTEM 13 PROCESS COOLING WATER FOR FEED NOZZLES	3217
H-2-123150	20	4	SYSTEM 13 MELTER COOLING WATER FOR ELECTRODES, PADS, AND DOME HEATER TRANSFORMERS	3217
H-2-123150	21	4	SYSTEM 13 MELTER COOLING WATER FOR DOME HEATERS AND BOTTOM PAD	3217
H-2-123150	22	3	SYSTEM 13 MELTER ARGON SUPPLY	3217
H-2-123151	01	3	SYSTEM 16A FCDC SERVICE HEADERS	3219
H-2-123151	02	3	SYSTEM 16A FCDC NOZZLE FEED PUMP #1	3219
H-2-123151	03	3	SYSTEM 16A FCDC NOZZLE FEED PUMP #2	3219
H-2-123151	04	3	SYSTEM 16A FCDC NOZZLE FEED PUMP #3	3219
H-2-123151	05	3	SYSTEM 16A FCDC NOZZLE FEED PUMP #4	3219
H-2-123151	06	3	SYSTEM 16A FCDC NOZZLE FEED PUMP #5	3219
H-2-123151	07	3	SYSTEM 16A FCDC NOZZLE FEED PUMP #6	3219
H-2-123151	08	3	SYSTEM 16A FCDC NOZZLE FEED PUMP #7	3219
H-2-123151	09	3	SYSTEM 16A FCDC RIBBON NOZZLE FEED PUMP	3219
H-2-123151	10	3	SYSTEM 16A FCDC #1 SPRAY NOZZLES	3219
H-2-123151	11	3	SYSTEM 16A FCDC #1 GRAPPLE AND RINSE CYCLE	3219
H-2-123151	12	3	SYSTEM 16A FCDC #1 SPENT FRIT HANDLING AND CCTV	3219
H-2-123151	13	3	SYSTEM 16B FCDC #2 SPRAY NOZZLES	3219
H-2-123151	14	3	SYSTEM 16B FCDC #2 GRAPPLE AND RINSE CYCLE	3219
H-2-123151	15	3	SYSTEM 16B FCDC #2 SPENT FRIT HANDLING AND CCTV	3219
H-2-123151	16	3	SYSTEM 16A PRELIMINARY DECON WATER WASH	3219
H-2-123152	01	3	SYSTEM 17 INNER CANISTER CLOSURE AND TEMPERATURE SURVEY STATION	3219
H-2-123152	02	3	SYSTEM 17 INNER CANISTER CLOSURE LEAK TEST STATION	3219
H-2-123152	03	3	SYSTEM 17 TIG WELDERS AND LEAK CHECK EQUIPMENT DELETED PER CR-634	3219
H-2-123152	04	0	SYSTEM 17 ICC PRESS AND CANISTER TROLLEY	6320
H-2-123152	05	0	SYSTEM 17 PLUG WELDER	6320
H-2-123152	06	0	SYSTEM 17 POWER PACK CLG & WELDER NITROGEN SUPPLY	6320