0062306

SNF-20879
0

Sampling and Analysis Plan for Waste Disposition of Empty Large Diameter Containers Contaminated with KE Basin North Loadout Pit Sludge

RECEIVED
AUG 09 2004
EDMC

Prepared for the U.S. Department of Energy
Assistant Secretary for Environmental Management

Fluor Hanford
P.O. Box 1000
Richland, Washington

Contractor for the U.S. Department of Energy
Richland Operations Office under Contract DE-AC06-96RL13200

Approved for Public Release
(Upon receipt of Clearance approval)
Further Dissemination Unlimited

SNF-20879
Revision 0

Sampling and Analysis Plan for Waste Disposition of Empty Large Diameter Containers Contaminated With KE Basin North Loadout Pit Sludge

J.L. Westcott, Fluor Hanford, Inc.

May 2004

Prepared for the U.S. Department of Energy
Assistant Secretary for Environmental Management

Fluor Hanford
P.O. Box 1000
Richland, Washington

Contractor for the U.S. Department of Energy
Richland Operations Office under Contract DE-AC06-96RL13200

Christine Willingham 5/24/04
Clearance Approval Date

N/A
Release Approval (stamp)

Approved for Public Release
(Upon receipt of Clearance approval)
Further Dissemination Unlimited

SNF-20879
0

Sampling and Analysis Plan for Waste Disposition of Empty Large Diameter Containers Contaminated with KE Basin North Loadout Pit Sludge

JL Westcott, Fluor Hanford

May 2004

Prepared for the U.S. Department of Energy
Assistant Secretary for Environmental Management

Fluor Hanford
P.O. Box 1000
Richland, Washington

Contractor for the U.S. Department of Energy
Richland Operations Office under Contract DE-AC06-96RL13200

Clearance Approval	Date	N/A Release Approval (stamp)

Approved for Public Release
(Upon receipt of Clearance approval)
Further Dissemination Unlimited

SNF-20879
0

For use with Technical Documents (when appropriate)	
EDC-	FMP-
EDT-	ECN-
Project No.:	Division:
Document Type: RPT	Page Count: 31

For use with Speeches, Articles, or Presentations (when appropriate)							
Abstract		Summary		Full Paper		Visual Aid	
Conference Name:							
Conference Date:							
Conference Location:							
Conference Sponsor:							
Published in:							
Publication Date:							

TRADEMARK DISCLAIMER

Reference herein to any specific commercial product, process, or service by trade name, trademark, manufacturer, or otherwise, does not necessarily constitute or imply its endorsement, recommendation, or favoring by the United States Government or any agency thereof or its contractors or subcontractors.

Scientific or technical information is available to U.S. Government and U.S. Government contractor personnel through the Office of Scientific and Technical Information (OSTI). It is available to others through the National Technical Information Service (NTIS).

This report has been reproduced from the best available copy.

Printed in the United States of America

CONTENTS

1.0 INTRODUCTION 1
- 1.1 BACKGROUND 4
- 1.2 DATA QUALITY OBJECTIVES 4
  - 1.2.1 Statement of Problem 5
  - 1.2.2 Identify the Decisions 6
  - 1.2.3 Identify Inputs to the Decisions 7
  - 1.2.4 Define the Study Boundaries 8
  - 1.2.5 Decision Rules 8
  - 1.2.6 Limits on Decision Error 8
  - 1.2.7 Optimize the Design for Obtaining Data 8

2.0 QUALITY ASSURANCE PROJECT PLAN 9
- 2.1 PROJECT MANAGEMENT 9
  - 2.1.1 Project/Task Description 9
  - 2.1.2 Project Organization 9
  - 2.1.3 Roles and Responsibilities 10
  - 2.1.4 Special Training Requirements and Certification 11
  - 2.1.5 Quality Objectives and Criteria for Measurement Data 11
  - 2.1.6 Documentation and Records 13
- 2.2 MEASUREMENT COLLECTION 13
  - 2.2.1 Measurement Method 13
  - 2.2.2 Instrument Testing, Inspection, and Maintenance 13
  - 2.2.3 Instrument Calibration and Calibration Frequency 14
  - 2.2.4 Inspection/Acceptance Requirements for Supplies 14
  - 2.2.5 Non-direct Measurement 14
  - 2.2.6 Field Measurement Data Management 16
- 2.3 ASSESSMENT/OVERSIGHT FOR FIELD MEASUREMENTS 17
  - 2.3.1 Assessments and Response Actions 17
  - 2.3.2 Reports to Management 17
- 2.4 DATA REVIEW, VALIDATION, AND USABILITY 17
  - 2.4.1 Data Review, Verification, and Validation Requirements 18
  - 2.4.2 Verification and Validation Methods 18
  - 2.4.3 Reconciliation With User Requirements 19

3.0 HEALTH AND SAFETY 20

4.0 REFERENCES 22

APPENDIX

A DATA VALIDATION FORM ..... A-i

FIGURES

Figure 1a. The Large Diameter Container is a Pressure Vessel. 2

Figure 1b. Large Diameter Container Has a Bank of Filters. 3

Figure 2. Measurement Collection and Waste Management Organization Chart. 10

TABLES

Table 1. List of Contaminants of Concern. 5

Table 2. Data Quality Objectives and Sampling Analysis Plan Team Members. 5

Table 3. Key Decision-Makers. 6

Table 4. Decision Statements for Designation of K East Basin Treated North Loadout Pit Sludge. 6

Table 5. Decision Rules for Designation of K East Basin Treated North Loadout Pit Sludge. 8

Table 6. Assay Instrument Performance Requirements. 12

Table 7. Radionuclide Concentrations of As-Settled North Loadout Pit Sludge. 15

TERMS

AJHA	Automated Job Hazards Analysis
ARAR	applicable or relevant and appropriate requirement
ATS	action tracking system
BHI	Bechtel Hanford, Inc.
COC	contaminant of concern
DFSNW	Duratek Federal Services Northwest
DQO	data quality objective
DR	decision rule
DS	decision statement
ERDF	Environmental Restoration Disposal Facility
FH	Fluor Hanford, Inc.
KE	K East
LDC	large diameter container
LLBG	low-level burial ground
NLOP	North Loadout Pit
NRC	U.S. Nuclear Regulatory Commission
PCB	polychlorinated biphenyl
PNNL	Pacific Northwest National Laboratory
QA	quality assurance
SAP	sampling and analysis plan
WS	waste stream

1.0 INTRODUCTION

Sludge waste removed from the K East (KE) Basin North Loadout Pit (NLOP) is loaded into a large diameter container (LDC) for transport to a facility for treatment. A loaded LDC is placed inside a cask for transport. The LDC will be used one or more times to transport sludge, then disposed of as radioactive waste. The purpose of this document is to specify the data, data quality control, and data management necessary to dispose of empty LDCs as low-level waste to the Environmental Restoration Disposal Facility (ERDF). This document does not apply to empty LDCs that are classified as transuranic waste. Information collected per this document may be applied to an empty LDC for burial as low-level waste to the Hanford Site low-level burial grounds in the event the waste does not comply with ERDF disposal criteria.

The LDC is a pressure vessel that is approximately 1.5 m (5 ft) in diameter and 3 m (10 ft) tall. A bank of filters mounted in the upper half of the LDC prevents sludge from leaving the vessel while it is being filled. During filling, the majority of sludge settles to the bottom portion of the LDC; however, the sludge that does not immediately settle is trapped on the bank of filters. After the LDC has been filled, most of the water is drained and the LDC is backwashed, driving a significant amount of the adhering sludge from the filters. However, some sludge will remain on the bank of filters after the backwash.

Figures 1a and 1b are design drawings of the LDC.

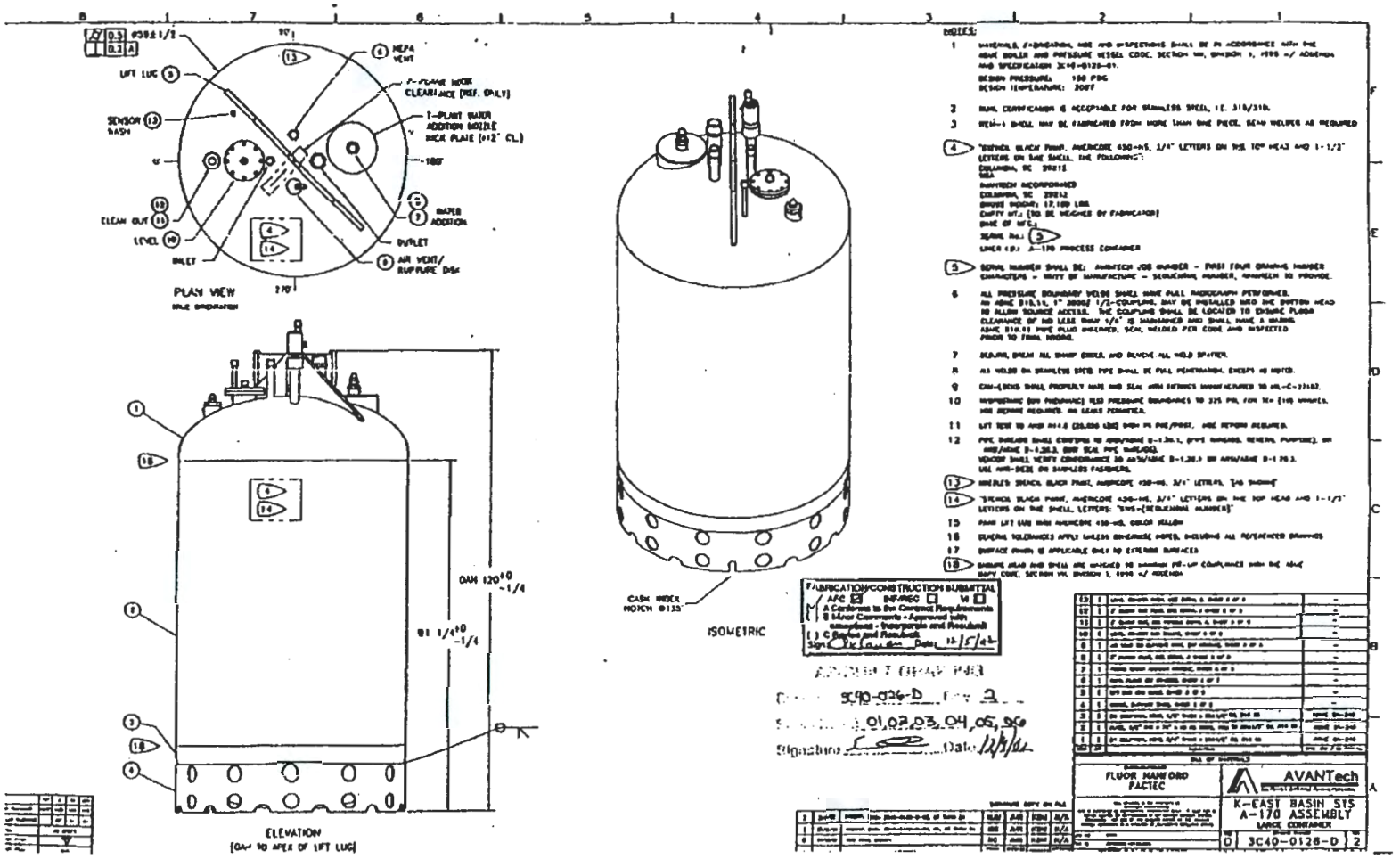

Figure 1a. The Large Diameter Container is a Pressure Vessel.

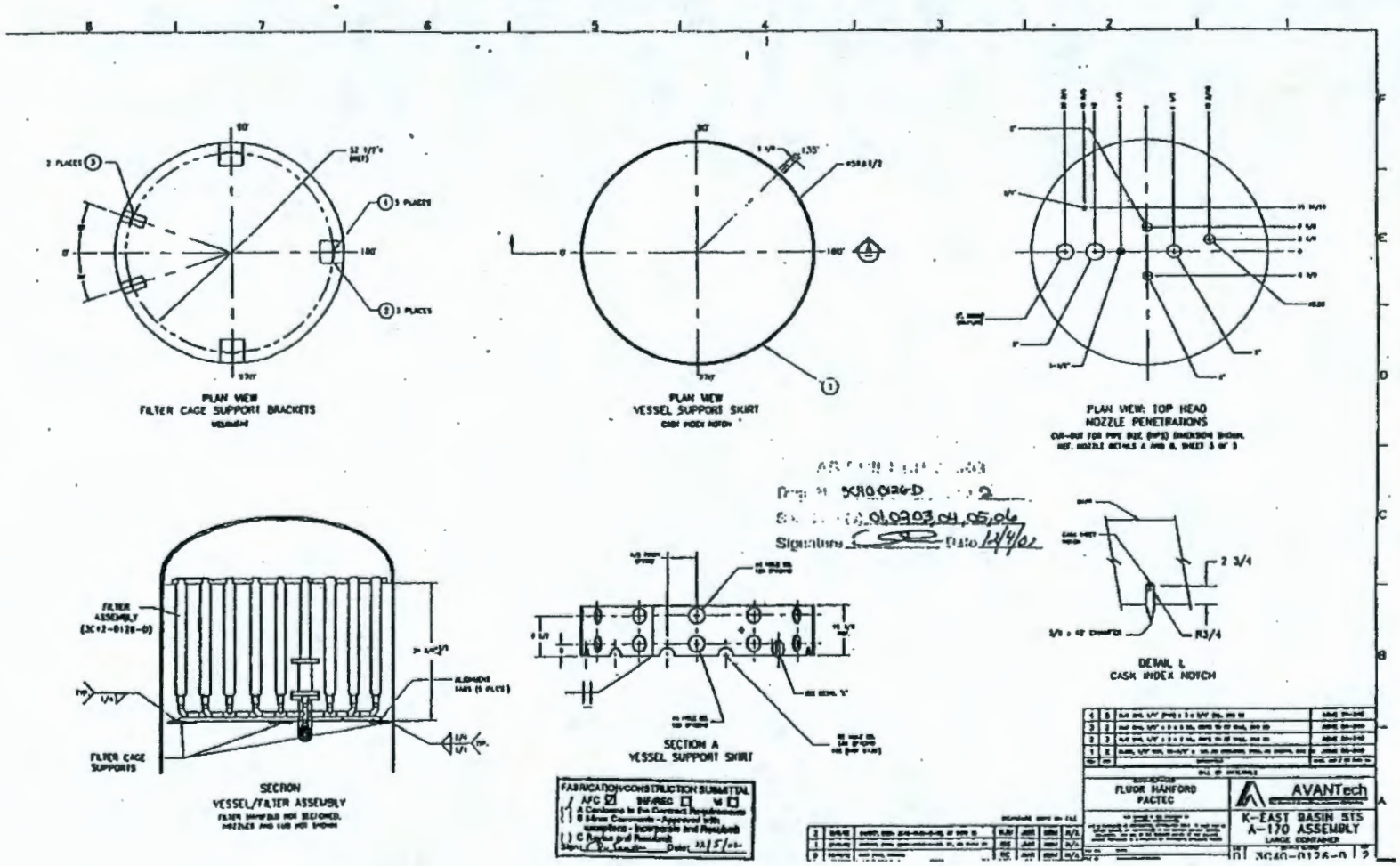

Figure 1b. Large Diameter Container Has a Bank of Filters.

The LDC will be shipped to a facility where it will be emptied of sludge from the NLOP to the extent possible. Approximately 90 kg (200 lb) of NLOP sludge may be retained in the empty LDC, the actual quantity retained will be determined and decisions made accordingly. The empty LDC intended for disposal as waste will be grouted fixing NLOP sludge residue to comply with transportation and waste disposal requirements. If the emptied then grouted LDC cannot comply with the ERDF waste acceptance criteria then it will be disposed in the Hanford Site low-level burial grounds or not grouted and stored in preparation for shipment to the Waste Isolation Pilot Plant.

Under *Washington Administrative Code* (WAC) 173-303, "Dangerous Waste Regulations," (Letter 0101943, "Contract No. DE-AC06-96RL13200 - Completion of Waste Designation for K Basin Sludge Waste Streams" [Letter 0101943]), the sludge from the NLOP of the KE Basin is not regulated as a dangerous waste. The grouting being performed is not to comply with Land Disposal Restrictions requirements.

1.1 BACKGROUND

The KE Basin is located in the 100-K Area on the Hanford Site. The fuel basin is a large open-topped concrete pool containing approximately 4.9 million L (1.3 million gal) of demineralized water. The basin was constructed in the early 1950s. The basin was used to store spent nuclear fuel from the KE reactor until the early 1970s, when the reactor was removed from service. Spent nuclear fuel, primarily from N Reactor, has been stored in the KE Basin since 1975 (DOE/EIS-0245, *Environmental Impact Statement-Management of Spent Nuclear Fuel from the K Basins at the Hanford Site*). Fuel stored in the basin has corroded, releasing particles and fuel pieces onto the basin floor, adding radioactive material to the sludge on the bottom of the basin.

In 1978, the water treatment system for the KE Basin was upgraded by adding a sand filter and ion-exchange columns. The KE Basin NLOP, which until about March of 2004 had been isolated from the rest of the basin, provides a collection area for the backwash of the KE Basin sand filter. The sand filter is periodically backwashed to remove the buildup of filtered material.

The sludge removed from the KE Basin NLOP is retrieved and pumped into a LDC. The LDC will be placed inside a cask for transport to a facility that will treat the sludge to meet disposal requirements. The LDC will be used one or more times. The LDC will be received and emptied of NLOP sludge at the sludge treatment facility. The empty LDC will be filled with grout before disposal at Hanford. Approximately four to six LDCs are expected to be used and will require disposal as low-level radioactive waste.

1.2 DATA QUALITY OBJECTIVES

The data quality objectives (DQO) applicable to this waste are developed in document SNF-20425, *Data Quality Objectives Summary Report for Waste Disposition of Empty Large Diameter Containers Contaminated with KE Basin North Loadout Pit Sludge*. The list of contaminants of concern (COC) determined by the DQOs process are provided in Table 1.

Table 1. List of Contaminants of Concern.

WS No.	COCs
1	H-3,C-14, Fe-55, Ni-59, Co-60, Ni-63, Se-79, Sr-90, Mo-93, Zr-93, Tc-99, Pd-107, Cd-113m, Sn-121m, Sb-125, Sn-126, Cs-134, Cs-135, Cs-137, Pm-147, Sm-151, Eu-152, Eu-154, Eu-155, Pa-231, Th-232, U-232, U-233, U-234, U-235, U-236, Np-237, U-238, Pu-238, Pu-239, Pu-240, Pu-241, Am-241, Am-242m, Pu-242, Cm-242, Am-243, Cm-243, Cm-244
	Hg, Se, As, Ba, Cd, Cr, Pb, Ag, Tl, Ni, Be, Sb
	PCB
	Free liquid

Notes:
COC = Contaminant of concern.
PCB = Polychlorinated biphenyl.
WS = Waste stream.

1.2.1 Statement of Problem

The disposal of a grouted LDC contaminated with sludge from the NLOP of the KE Basin requires the collection of data regarding the radionuclides, concentrations of the chemical constituents, and physical characteristics of the waste to demonstrate compliance with ERDF's waste acceptance criteria.

A team was assembled and a workshop held to determine the DQOs and put together this sampling and analysis plan (SAP). Table 2 identifies the DQO workshop team members. Table 3 identifies the key decision-makers.

Table 2. Data Quality Objectives and Sampling Analysis Plan Team Members. (2 sheets)

Name	Company/Organization	Position or Area of Expertise
Dave Watson	FH/K Basins Project	Regulatory Support
Jeanne Kisielnicki	FH/Sludge Project	Sludge Project
George Mellinger	PNNL/Waste Treatment	Treatment Project
James Larsen	PNNL/325 hot cells	Waste Treatment
Rich Lipinski	BHI/Waste Management	Waste Management
Gary Sevigny	PNNL/325 hot cells	Waste Treatment
Terry Winward	FH/K Basins Project	Regulatory Support
Steve Metzger	FH/T Plant	Operations
Ryan Ollero	BHI/Waste Management	Waste Management
Jeff Westcott	FH/Waste Management	Task Lead and Waste Management
John Woodbury	DFSNW/Transportation	Transportation Specialist
Bill Ayers	POLES/Waste Management	Waste Management

Table 2. Data Quality Objectives and Sampling Analysis Plan Team Members. (2 sheets)

Name	Company/Organization	Position or Area of Expertise

Notes:

BHI = Bechtel Hanford, Inc.
DFSNW = Duratek Federal Services Northwest.
FH = Fluor Hanford, Inc.
PNNL = Pacific Northwest National Laboratory.
POLES = Polestar Applied Technology, Inc.

Table 3. Key Decision-Makers.

Name	Organization
James Todd	U.S. Department of Energy, Richland Operations Office
Larry Gadbois	U.S. Environmental Protection Agency

1.2.2 Identify the Decisions

The decisions identified are those necessary to manage empty grouted LDCs as waste under applicable or relevant and appropriate requirements (ARAR) identified by Letter 9957494, "Contract No. DE-AC06-96RL13200 - Signed Record of Decision (ROD) for the K Basins Interim Remedial Action" (Letter 9957494), and to dispose of them as waste at ERDF. The empty grouted LDC will not be designated as dangerous waste but will be managed for PCB in accordance with the *Toxic Substances Control Act of 1976* ARAR, so these decisions will not be considered further in this document as there are no information needs. SNF-20425 details the determination that the waste is not dangerous but requires management for PCB content. The decision statements shown in Table 4 are those that still require data collection to support resolution.

Table 4. Decision Statements for Designation of K East Basin Treated North Loadout Pit Sludge.

DS 1 – Determine if the waste does not comply with the ERDF waste acceptance criteria, or cannot be treated to meet ERDF waste acceptance criteria, then the waste must be stored or disposed of at another candidate facility (e.g., CWC/LLBG). If the material does comply with the ERDF waste acceptance criteria, or can be treated to meet ERDF waste acceptance criteria, then waste is disposed of at the ERDF.

Notes:

CWC = Central Waste Complex.
DS = decision statement.
ERDF = Environmental Restoration Disposal Facility.
LLBG = low-level burial ground.

The data obtained as directed by this document will be used to complete characterization of the waste for disposal at ERDF.

1.2.3 Identify Inputs to the Decisions

The data inputs needed to resolve the decision statement have been identified, along with measurement performance requirements to support the data collection. See the DQO document (SNF-20425) for the detail behind the selection of inputs, measurement methods and field techniques, and tables that present these information needs. The data input necessary to support decision-making consists of field measurements of the residual sludge content of an empty LDC, the grouted LDC weight, and inspection of the grouted LDC to determine compliance with ERDF free-liquid content and container void-space requirements.

The KE Basin sludge has been designated as not being a dangerous waste under WAC 173-303 (Letter 0101943, 2001). The addition of grout to the LDC will maintain the waste status as not dangerous waste. No chemical analysis is planned or necessary to support designation of the grouted LDC.

The ERDF can dispose of solid polychlorinated biphenyl (PCB) waste at unlimited concentration, so an estimate of the PCB content of the waste is all that is necessary to facilitate disposal at the ERDF. The source of PCB in NLOP sludge contaminating the LDC is basin and pit sludge, so the concentration of PCB in the waste would be no higher than the maximum PCB concentration reported for basin sludge. The concentration of PCB in the grouted LDC will be assigned based on the maximum concentration of KE Basin sludge and the amount of sludge contaminating the LDC.

The existing radionuclide analyses and process knowledge provide data adequate to establish an estimate of nuclide concentrations in the KE Basin NLOP sludge. The radionuclide inventory of an LDC will be determined by measuring the amount of sludge contaminating the LDC. Radionuclide analysis of a sample is not planned or necessary to support decision-making regarding the grouted LDC.

The quantity of KE Basin NLOP sludge contaminating an LDC will be measured by determining a tare weight for each LDC before use, then measuring the empty LDC weight after use. The difference between before and after use weights of the LDC, when adjusted for water content, is the quantity of sludge contained in the LDC. When the LDC is weighed, a level measurement will be taken to quantify the heel material remaining in the empty LDC. In addition, a visual observation will be performed on the used LDC to support LDC weight adjustment for water content. The visual observation is to ensure the level instrument is measuring water not sludge. The visual observation may be performed using remote equipment like a camera or boroscope.

The grouted LDC will be visually inspected to confirm void-space and free-liquid content comply with the ERDF waste acceptance criteria (BHI-00139, *Environmental Restoration Disposal Facility Waste Acceptance Criteria*). Inspection for compliance with free liquid criteria is based on the observation of the presence of absorbent in the LDC. Liquid in the filter pipe manifold internal to the LDC will also be removed.

Each grouted LDC will be weighed in order to determine the total waste weight.

1.2.4 Define the Study Boundaries

The study boundaries identify the spatial and temporal boundaries of the action under investigation, as well as practical constraints that must be taken into consideration. The action that is the subject of this document is the disposal of empty LDCs that are no longer needed. Each empty LDC will be prepared for disposal by the addition of grout. A total of between four and six LDCs are expected to be disposed.

1.2.5 Decision Rules

The information developed in the previous steps of the DQO (SNF-20425) are combined with the parameter of interest and an action level to provide a concise description of what action will be taken based on the results of data collected. Table 4 in the DQO lists the final action level for each decision statement and COC; this information has been incorporated into performance requirements presented later in this document. Table 5 lists the decision rules that apply to the designation of grouted LDCs contaminated with KE Basin NLOP sludge.

Table 5. Decision Rules for Designation of K East Basin Treated North Loadout Pit Sludge.

DR 1 – If the waste <u>does not comply</u> with the ERDF waste acceptance criteria and cannot be treated to comply, the waste must be stored or disposed at the Hanford Site CWC or LLBG. If the waste <u>does comply</u> with the ERDF waste acceptance criteria or has been treated to meet ERDF waste acceptance criteria, it will be disposed of at the ERDF.

Notes:

CWC = Central Waste Complex.
DR = decision rule.
ERDF = Environmental Restoration Disposal Facility.
LLBG = low-level burial ground.

1.2.6 Limits on Decision Error

This section of a DQO generally is used to establish the parameters for a statistically based sample design. A statistically based approach will not be used, rather, all LDCs will be weighed, visually inspected and observed, and measured for water level. See the DQO document (SNF-20425) for additional details.

The waste is presumed to contain levels of PCB commensurate with the maximum PCB loading in KE Basin sludge and the amount of sludge contaminating the LDC.

1.2.7 Optimize the Design for Obtaining Data

This section of a DQO generally is used to determine the most resource-effective data collection design for a statistically based sample design. A statistically based approach is not being used, therefore, optimization of obtaining data is not applicable.

2.0 QUALITY ASSURANCE PROJECT PLAN

This document is written in accordance with the applicable requirements of EPA/240/B-01/003, *EPA Requirements for Quality Assurance Project Plans*.

2.1 PROJECT MANAGEMENT

This section identifies the individuals or organizations participating in the project and discusses their specific roles and responsibilities. This section also discusses quality objectives for measurement data and special training requirements for staff performing the work.

2.1.1 Project/Task Description

All of the grouted LDCs contaminated with KE Basin NLOP sludge will be characterized as necessary to determine compliance with waste acceptance criteria for disposal at ERDF. The characterization will include measurements of LDC weight and water level, visual observation of sludge in the bottom of an empty LDC in support of determination of the amount of sludge contaminating the empty LDC, measurements of the weight of each grouted LDC to determine total waste weight, and visual inspection of each grouted LDC to determine the amount of absorbent added and container void space. Liquid will also be removed from the filter pipe manifold of each LDC. The grouted LDC radionuclide inventory, weight, liquid removal, and visual inspection results will be used to compare the waste to the ERDF waste acceptance criteria to determine whether it is acceptable for disposal at ERDF.

2.1.2 Project Organization

Figure 2 presents the organization chart for measurement collection and waste management interfaces to the ERDF.

Figure 2. Measurement Collection and Waste Management Organization Chart.

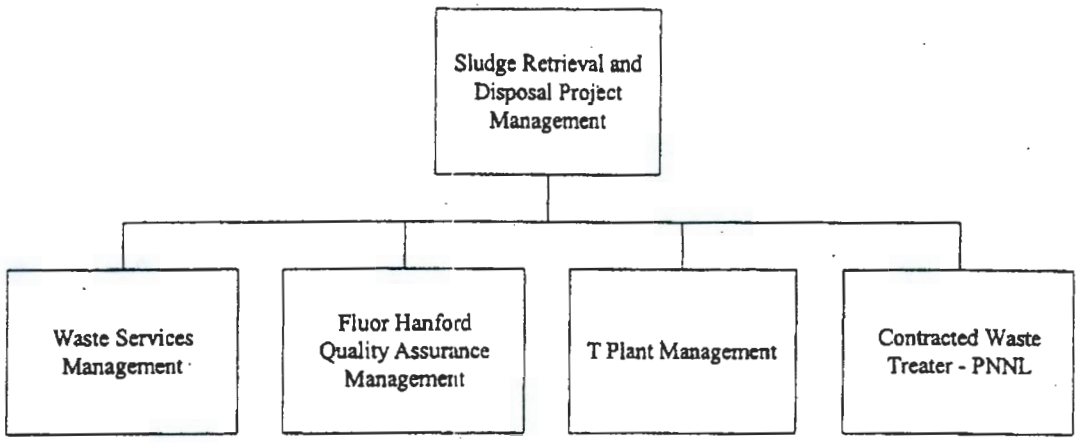

PNNL = Pacific Northwest National Laboratory.

2.1.3 Roles and Responsibilities

This section identifies the responsibilities of the organizations supporting grouted LDCs contaminated with KE Basin NLOP sludge disposal activities that collect, analyze, survey, or assess results of data for waste disposal.

Sludge Retrieval and Disposal Project

The Sludge Retrieval and Disposal Project has the following responsibilities:

- Integrate activities of the project to accomplish removal, treatment, and disposal of empty LDCs.
- Obtain measurements of weight and water level of LDCs prior to sludge loading.
- Manage corrective actions of work performed.

Waste Services

The Waste Services Organization has the following responsibilities:

- Perform visual inspection of grouted LDCs.
- Perform data review and validation of measurements performed.
- Maintain qualifications of personnel performing work in accordance with this document.

T Plant Organization

The T Plant organization has the following responsibilities:

- Grout the empty LDC, weigh the grouted LDC, and add absorbent to the grouted LDC.
- Weigh and collect water level measurements on empty used LDCs, as necessary.
- Maintain qualifications of personnel performing work in accordance with this document.

Sludge Treatment Organization

The sludge treatment organization, Pacific Northwest National Laboratory (PNNL), has the following responsibilities:

- Remove sludge and water from the LDC.
- Perform visual observation of empty LDCs.
- Maintain qualifications of personnel performing work in accordance with this document.

Quality Assurance Organization

The Quality Assurance Organization has the following responsibilities:

- Fluor Hanford and PNNL, Quality Assurance (QA) have the option to conduct random surveillances to verify compliance with the implementation of this SAP.

2.1.4 Special Training Requirements and Certification

Training that is specific or special with regard to performing the activities in accordance with this document is visual inspection of grouted LDCs. Other activities performed in accordance with this document are common with training implemented by Fluor Hanford per HNF-RD-11061 *Training Requirements*, and PNNL per PNL-MA-834, *Training Implementation Matrix for PNNL Managed Nuclear Facilities*.

Training and certification that apply to visual inspection of grouted LDCs is implemented in accordance with WMP-200, *Waste Management Project Procedures*, Section 5.1, "Training and Qualification Program."

2.1.5 Quality Objectives and Criteria for Measurement Data

The QA objective of this plan is to develop implementation guidance that will provide data of known and appropriate quality. Data quality typically is assessed by representativeness, comparability, accuracy, precision, and completeness. These parameters are described in the paragraphs following Table 6. The applicable quality control guidelines, quantitative target limits, and levels of effort for assessing data quality are dictated by the intended use of the data

and the nature of the measurement method. A summary of COCs for each LDC is provided in Table 1. The methods and detection limits for measurements planned for collection are presented in Table 6. The nomenclature used to describe quality parameters is contained in the following discussion.

Table 6. Assay Instrument Performance Requirements.

Analyte	Analytical method	Accuracy requirement	Precision requirement
Empty LDC weight	Weigh scale	± 23 kg	± .5%
Grouted LDC weight	Weigh scale	*	*
LDC water level	Ultrasonic level or equivalent	± 2.5 cm	± 1%

Note:
*Per manufacturer's specifications.
LDC = large diameter container.

Representativeness. Representativeness is a measure of how closely field measurement results reflect the actual quantity in the waste matrix. Test plan design, techniques, and management protocols have been developed and are discussed in subsequent sections of this document. The documentation will establish that protocols have been followed and measurement identification and integrity is ensured.

Comparability. Comparability expresses the confidence with which one data set can be compared to another. Data comparability will be maintained by using standard documented procedures, consistent methods, and consistent units.

Accuracy. Accuracy is an assessment of the closeness of the measured value to the true value. Accuracy of measurement results is assessed by testing against known instrument standards. Equipment calibration is verified by routine checks at a frequency defined in the QA plan and appropriate procedures. Accuracy targets for weight and water level measurements are listed in Table 6.

Precision. Precision is a measure of the data spread when more than one measurement has been taken on the same LDC. Precision can be expressed as the relative percent difference for duplicate measurements. Precision targets for weight and water level measurements are listed in Table 6.

Completeness. Completeness is a comparison of the amount of valid data obtained to the valid data required from the measurement process and the complete implementation of defined field procedures. The completeness objective for LDC weight, LDC water level, empty LDC observation and grouted LDC inspection are valid measurements of each parameter for each LDC. The completeness objective for liquid removal from the LDC filter pipe manifold is the activity performance per procedure. If the completeness objective is not met, additional measurements may be taken or conservative estimates applied where appropriate.

2.1.6 Documentation and Records

Field measurement documentation will be kept in accordance with requirements of HNF-RD-8310, *Document Control Program* and HNF-RD-210, *Records Management Program.*

2.2 MEASUREMENT COLLECTION

The measurements collected per this SAP are all field measurements consisting of water level in empty LDCs, weight of both empty and grouted LDCs, visual inspection of grouted LDCs, and visual observation of empty used LDCs. Measurements are collected directly on all LDCs, no samples are collected for analysis. Since samples are not collected this document will not discuss activities specific to sampling and laboratory analysis, including sample process design, sampling methods, sample handling and custody, and laboratory analytical methods. Activities appropriate for field instrumentation measurements are discussed in subsequent sections of this document.

2.2.1 Measurement Method

The weighing of empty and grouted LDCs will be obtained using a scale mounted on a crane or some other lifting device.

The water level in empty LDCs will be measured using the level instrument mounted on each LDC or another method that complies with the performance requirements of Table 6.

Visual observation of empty LDCs will be performed by the organization removing the sludge from the LDC to perform treatment of sludge. The observation will be made by inserting a camera into the LDC and recording the results on video as per PNNL procedure SFO-318/46857-PROC01, *K-Basin East NLOP Sludge Grouting Procedure.*

Visual inspection of grouted LDCs for void space and presence of absorbent will be conducted in accordance with WMP-370, *Waste Services Procedures*, Section 1.10, "Verification Program." Also, liquid resident in the filter pipe manifold will be removed per facility procedures to be developed.

2.2.2 Instrument Testing, Inspection, and Maintenance

The level instrument and weigh scales are purchased, commissioned and maintained in a useable configuration per HNF-PRO-268, *Control of Purchased/Acquired Items and Services*; HNF-PRO-283, *Control of Inspections*; and HNF- RD-10859, *Maintenance Management.*

The camera used to record the visual observation will be commissioned and maintained in a useable configuration per PNNL Quality Assurance Plan 46857-QAPjP *K Basin Sludge Treatment Project.*

Correction of nonconformances managed by Fluor Hanford shall be in accordance with HNF-PRO-298, *Nonconforming Items*. Correction of nonconformances managed by PNNL shall be tracked in the PNNL action tracking system (ATS) or another agreed-upon alternative.

2.2.3 Instrument Calibration and Calibration Frequency

The weigh scale and water level instrument calibration and calibration frequency are governed by HNF-PRO-490, *Calibration Management Program*.

The camera used to perform visual observation of empty LDCs will have the system resolution checked and adjusted per manufacturer specifications prior to use. This check will be recorded on the video record of the observation.

These requirements are not applicable to visual inspection of a grouted LDC.

Correction of nonconformances managed by Fluor Hanford shall be in accordance with HNF-PRO-298. Correction of nonconformances managed by PNNL shall be tracked in the PNNL ATS or another agreed-upon alternative.

2.2.4 Inspection/Acceptance Requirements for Supplies

Supplies are procured and managed under HNF-PRO-268, *Control of Purchased/Acquired Items and Services* or PNNL Quality Assurance Plan 46857-QAPjP.

These requirements are not applicable to visual inspection of a grouted LDC.

Correction of nonconformances managed by Fluor Hanford shall be in accordance with HNF-PRO-298. Correction of nonconformances managed by PNNL shall be tracked in the PNNL ATS or another agreed-upon alternative.

2.2.5 Non-direct Measurement

The radionuclide inventory of a LDC is estimated based on concentrations and density of as-settled KE Basin NLOP sludge established from existing data. The radionuclide concentrations are calculated from data in SNF-20425, Appendix A, and are presented in Table 7.

Table 7. Radionuclide Concentrations of As-Settled North Loadout Pit Sludge. (2 sheets).

Radionuclide	Radionuclide concentration in North Loadout Pit sludge (Ci/kg)
H-3	2.59E-05
Be-10	2.54E-13
C-14	1.02E-11
Fe-55	6.11E-06
Ni-59	1.64E-06
Co-60	1.01E-04
Ni-63	1.44E-06
Se-79	3.80E-08
Sr-90	2.64E-03
Mo-93	2.51E-07
Zr-93	3.44E-07
Nb-94	5.49E-10
Tc-99	1.54E-06
Pd-107	4.14E-09
Cd-113m	2.50E-06
Sn-121m	8.37E-09
Te-123	3.42E-10
Sb-125	9.69E-05
Sn-126	5.72E-08
I-129	3.63E-09
Cs-134	1.25E-04
Cs-135	6.41E-08
Cs-137	6.97E-03
Pm-147	1.23E-03
Sm-147	2.31E-14
Eu-150	1.60E-13
Sm-151	1.42E-04
Eu-152	8.64E-07
Gd-152	1.19E-20
Eu-154	1.46E-04
Eu-155	5.09E-05
Pb-210	7.83E-19
Ra-226	8.64E-14
Ac-227	3.10E-10

Table 7. Radionuclide Concentrations of As-Settled North Loadout Pit Sludge. (2 sheets)

Radionuclide	Radionuclide concentration in North Loadout Pit sludge (Ci/kg)
Ra-228	2.77E-16
Th-229	1.60E-13
Th-230	9.62E-12
Th-232	2.12E-08
Pa-231	3.42E-08
U-232	5.19E-10
U-233	1.88E-11
U-234	2.31E-06
U-235	8.71E-08
U-236	3.27E-07
Np-237	3.41E-07
U-238	1.88E-06
Pu-238	2.74E-04
Pu-239	1.31E-03
Pu-240	7.21E-04
Pu-241	3.86E-02
Am-241	1.73E-03
Am-242m	6.52E-08
Pu-242	3.47E-07
Am-243	1.60E-08
Cm-242	5.06E-05
Cm-243	1.16E-04
Cm-244	4.48E-04
Pu-244	2.45E-16
Cm-245	9.95E-12
Cm-246	8.97E-14
Cm-247	1.17E-20
Cm-248	1.24E-21

2.2.6 Field Measurement Data Management

The measurements of weight and water level of empty LDCs and weight of grouted LDCs are performed per facility procedures to be developed.

Visual inspection of grouted LDCs for addition of absorbent and void space are performed per WMP-370, Section 1.10. The removal of liquid from the filter pipe manifold will be performed per facility procedures to be developed

Visual observation of an empty LDC is performed per PNNL procedure SFO-318/46857-PROC01 and recorded on video.

Correction of nonconformances managed by Fluor Hanford shall be in accordance with HNF-PRO-052, *Corrective Action Management*, and/or HNF-PRO-298. Correction of nonconformances managed by PNNL shall be tracked in the PNNL assessment tracking system (ATS) or another agreed-upon alternative.

2.3 ASSESSMENT/OVERSIGHT FOR FIELD MEASUREMENTS

2.3.1 Assessments and Response Actions

Fluor Hanford QA may conduct random surveillances and assessments in accordance with HNF-PRO-9769, *Surveillance Process*. Assessments and surveillances are performed to verify compliance with requirements outlined in this SAP, procedures, and regulatory requirements.

PNNL quality engineers will perform internal surveillances in accordance with the Quality Assurance Plan 46857-QAPjP *K Basin Sludge Treatment Project*.

Correction of nonconformances managed by Fluor Hanford shall be in accordance with HNF-PRO-052 and/or HNF-PRO-298. Correction of nonconformances managed by PNNL shall be tracked in the PNNL ATS or another agreed-upon alternative.

2.3.2 Reports to Management

Nonconformances and corrective action status are reported to Fluor Hanford management in accordance with HNF-PRO-052.

The project status is maintained and presented to Fluor Hanford management via a summary report. A summary report of LDCs that are evaluated for ERDF acceptance will be published on an as-needed basis.

2.4 DATA REVIEW, VALIDATION, AND USABILITY

Requirements for review and evaluation of data usability are described in the following sections.

2.4.1 Data Review, Verification, and Validation Requirements

The data collected will be assessed against the criteria in Section 2.1.5. Data assessment will include review of qualitative DQOs that are appropriate to the measurements collected and the preparation of a summary report. A quantitative assessment of DQOs such as precision, accuracy, and detection limit are not appropriate for the measurements being taken. Instead, a qualitative assessment of these parameters is to be performed. The report will include an evaluation of the overall adequacy of the total measurement system with regard to the DQO of the data generated.

Representativeness. All of the LDCs will be subjected to all the measurements specified in this document, so each measurement is representative of the LDC for which it is taken. The attribute of representativeness is satisfied when the measurement identity and integrity are maintained for each LDC.

Comparability. The measurements are comparable when the methods and procedures for data collection are consistent across all of the LDCs. The measurements are comparable when collected in conformance with procedures and requirements specified in this document and all nonconformances are resolved.

Precision, Accuracy, and Measurement Detection Limit. A quantitative assessment of the attributes of precision, accuracy, and measurement detection limit are not necessary or appropriate for the measurements being performed. These attributes are satisfied for weight and liquid level measurements when the instruments are properly calibrated and are in useable condition. The camera used for visual observation of empty LDCs satisfies these attributes when the resolution is checked and adjusted prior to use. These attributes do not apply to visual inspection of grouted LDCs and liquid removal from the filter pipe manifold.

Completeness. The completeness objective is satisfied when all of the data specified in this document is collected and valid for each LDC. In some cases the completeness criteria can be satisfied by using estimation methods that would overestimate the sludge content in an LDC. For example, if visual observation is not available it can be assumed that the level is measuring sludge, not water thereby potentially over estimating the quantity of sludge contaminating a LDC.

2.4.2 Verification and Validation Methods

Data verification involves the physical observation of activities being performed in compliance with this document. Verification includes the visual inspection of grouted LDCs and visual observation of empty LDCs. Visual inspection of grouted LDCs is performed in accordance with WMP-370, Section 1.10. Visual observation of empty LDCs is performed per PNNL procedure SFO-318/46857-PROC01.

Data validation is the comparison of reported data and data quality measures to data quality requirements as per data acceptance criteria specified in Section 2.4.1. Each LDC will be evaluated with the results of the evaluation being recorded on the form provided in Appendix A.

The data collected will not undergo a third-party validation.

2.4.3 Reconciliation With User Requirements

A statistical data quality assessment will not be performed for these data collected because random sampling will not be conducted.

The estimated concentrations of radionuclides with the waste weight, free liquid content, and grouted LDC void space will be compared by the project to the applicable requirements of BHI-00139 for acceptance at the ERDF. A grouted LDC is acceptable to the ERDF if radionuclides are at or below acceptance thresholds, visual inspection shows the presence of absorbent, liquid has been removed from the LDC filter pipe manifold, and the LDC is void-filled per ERDF waste acceptance criteria.

Guidance given in the U.S. Nuclear Regulatory Commission's (NRC) *Issuance of Final Branch Technical Position on Concentration Averaging and Encapsulation, Revision in Part to Waste Classification Technical Position* (NRC 1995) describes situations where the masses of both encapsulant, such as grout, and waste may be used in waste class determinations. A grouted LDC corresponds to the situation described in NRC guidance as encapsulation of solid material, where it is permissible to consider grout and waste masses together in making classification determinations. In order to comply with the NRC guidance, the grout will be formulated to bear the expected overburden and the radionuclide loading limited to ensure less than 0.0002 mSv/hr (0.02 mrem/hr) external package dose after 500 years of decay.

Packaging by filling the interior of the vessel with grout is necessary to

- Remove free liquid to the extent reasonably achievable (at least < 1% of volume)
- Reduce dose external to the package to as low as reasonably achievable levels and meet the ERDF waste acceptance criteria
- Fix internal contamination for burial and transportation
- Minimize void space to the extent practicable (at least 90% full with pipes <5 cm (2 in.) in diameter not considered)
- Meet requirements of the U.S. Department of Transportation to ship outside of a cask (e.g., isotopes, activity, dose).

A summary report evaluating the overall adequacy of the total measurement system with regard to the DQO of the data generated and comparison to the ERDF acceptance criteria will be sent to Waste Services and Sludge Removal Project management. The report will be published on an as-needed basis.

3.0 HEALTH AND SAFETY

All field operations at Fluor Hanford-operated facilities required by this SAP will be conducted in accordance with HNF-MP-003, *Integrated Environmental, Safety, and Health Management System Description*. Field operations performed at the waste treatment facility are conducted in accordance with PNNL's safety program.

The management plan, HNF-MP-003, identifies processes and procedures where the primary hazards associated with waste management activities are managed. Some of these hazards are direct radiation exposure, potential personnel contamination, potential inhalation of airborne concentrations of radioactive materials, and exposures to hazardous substances. Rather than list the requirements to mitigate and control radiological and hazardous chemical exposures, the management plan references documents that provide the necessary direction to mitigate and control these hazards. To assist in developing subtier- or task-/subproject-specific implementation of the management plan, the Automated Job Hazards Analysis (AJHA) will be used in accordance with HNF-PRO-079, *Job Hazard Analysis*. The AJHA is a computer-based application to help planners identify the potential hazards associated with a job task and to implement the proper controls based on the hazards identified. Proper use of the AJHA in conjunction with the project management plan, plus specifics associated with the task, will constitute acceptable subtier- or task-/subproject-specific implementation of the management plan. In accordance with Title 29, *Code of Federal Regulations*, Part 1910, "Occupational Safety and Health Standards" (29 CFR 1910) Subpart 120(6)(1)(v) (OSHA99A), the management plan shall be made available to Fluor Hanford employees and any contractor or subcontractor involved with hazardous waste operations.

Fluor Hanford has a robust and mature radiation protection program. This program is described in HNF-5173, *PHMC Radiological Control Manual*. HNF-5173 fully implements 10 CFR 835, as currently amended. The planning of work involving radiation and radioactive materials hazards is further described in HNF-PRO-1623, *Radiological Work Planning Process*. Implementation of radiological work and radiation protection activities are detailed in procedures. Procedures address roles and responsibilities, qualifications, training, implementation of the as low as reasonably achievable philosophy, external and internal dosimetry, monitoring and surveillance, work control mechanisms (e.g., radiation work permits, and access and entry requirements), self-assessments, and use of specific radiation monitoring devices and meters.

The Fluor Hanford Chemical Management Program, as described in HNF-PRO-10468, *Chemical Management Process*, in conjunction with implementation of the AJHA in accordance with HNF-PRO-079, will be relied upon to protect the workers, the general public, and the environment from specific chemical substances and their associated hazards. The Chemical Management Program provides direction for the acquisition, storage, transportation, use, final disposition, record keeping, and management review of program performance for chemicals at the Hanford Site.

PNNL has a robust and mature safety program. The radiation protection program is described in the Standards Based Management System radiological control procedure that fully implements Title 10, *Code of Federal Regulations*, Part 835, "Occupation Radiation Protection" (10 CFR 835), as currently amended. The planning of work involving radiation and radioactive material hazards is further described in the Standards Based Management System and the work practices in the Radiochemical Processing Laboratory Handbook and are monitored and controlled in the Radiochemical Processing Laboratory integrated operations system and task-specific work documents.

4.0 REFERENCES

0101943, 2001, "Contract No. DE-AC06-96RL13200 - Completion of Waste Designation for K Basin Sludge Waste Streams," (Letter from P. G. Loscoe to D. R. Sherwood, U.S. Environmental Protection Agency, and M. A. Wilson, Washington State Department of Ecology, March 27), U.S. Department of Energy, Richland Operations Office, Richland, Washington.

9957494, 1999, "Contract No. DE-AC06-96RL13200-Signed Record of Decision (ROD) for the K Basins Interim Remedial Action," (Letter from P. G. Loscoe to R. D. Hanson, Fluor Daniel Hanford, Inc., September 30), U.S. Department of Energy, Richland Operations Office, Richland, Washington.

46857-QAPjP, 2004, *K Basin Sludge Treatment Project*, Pacific Northwest National Laboratory, Richland, Washington.

10 CFR 835, "Occupational Radiation Protection," *Code of Federal Regulations*, as amended.

29 CFR 1910, "Occupational Safety and Health Standards," *Code of Federal Regulations*, as amended.

DOE/EIS-0245, *Environmental Impact Statement-Management of Spent Nuclear Fuel from the K Basins at the Hanford Site*, U.S. Department of Energy, Richland Operations Office, Richland, Washington.

EPA/240/B-01/003, 2001, *EPA Requirements for Quality Assurance Project Plans*, U.S. Environmental Protection Agency, Washington, D.C.

BHI-00139, 2002, *Environmental Restoration Disposal Facility Waste Acceptance Criteria*, Bechtel Hanford, Inc., Richland, Washington.

HNF-5173, 2003, *PHMC Radiological Control Manual*, Rev. 2, Fluor Hanford, Inc., Richland, Washington.

HNF-MP-003, 2003, *Integrated Environmental, Safety, and Health Management System Description*, Rev. 9, Fluor Hanford, Inc., Richland, Washington.

HNF-PRO-052, 2003, *Corrective Action Management*, Rev. 10, Fluor Hanford, Inc., Richland, Washington.

HNF-PRO-079, 2004, *Job Hazard Analysis*, Rev. 7, Fluor Hanford, Inc., Richland, Washington.

HNF-PRO-268, 2004, *Control of Purchased/Acquired Items and Services*, Rev. 13, Fluor Hanford, Inc., Richland, Washington.

HNF-PRO-283, 2004, *Control of Inspections*, Rev. 6, Fluor Hanford, Inc., Richland, Washington.

HNF-PRO-298, 2004, *Nonconforming Items*, Rev. 9, Fluor Hanford, Inc., Richland, Washington.

HNF-PRO-490, 2001, *Calibration Management Program*, Rev. 4, Fluor Hanford, Inc., Richland, Washington.

HNF-PRO-1623, 2003, *Radiological Work Planning Process*, Rev. 5, Fluor Hanford, Inc., Richland, Washington.

HNF-PRO-9769, 2003, *Surveillance Process*, Rev. 3, Fluor Hanford, Inc., Richland, Washington.

HNF-PRO-10468, 2003, *Chemical Management Process*, Rev. 1, Fluor Hanford, Inc., Richland, Washington.

HNF-RD-210, 2002, *Records Management Program*, Rev. 1, Fluor Hanford, Inc., Richland, Washington.

HNF-RD-8310, 2003, *Document Control Program*, Rev. 2, Fluor Hanford, Inc., Richland, Washington.

HNF-RD-10859, 2003, *Maintenance Management*, Rev. 1, Fluor Hanford, Inc., Richland, Washington.

HNF-RD-11061, 2003, *Training Requirements*, Rev. 2, Fluor Hanford, Inc., Richland, Washington.

NRC, 1995, *Issuance of Final Branch Technical Position on Concentration Averaging and Encapsulation, Revision in Part to Waste Classification Technical Position*, U.S. Nuclear Regulatory Commission, Washington D.C.

PNL-MA-834, *Training Implementation Matrix for PNNL Managed Nuclear Facilities*, Pacific Northwest National Laboratory, Richland, Washington

SFO-318/46857-PROC01, *K-Basin East NLOP Sludge Grouting Procedure*, Pacific Northwest National Laboratory, Richland, Washington.

SNF-20425, 2004, *Data Quality Objectives Summary Report for Waste Disposition of Empty Large Diameter Containers Contaminated With KE Basin North Load Out Pit Sludge*, Rev. 0, Fluor Hanford, Inc., Richland, Washington.

Toxic Substances Control Act of 1976, 15 USC 2601, et seq.

WAC 173-303, "Dangerous Waste Regulations," *Washington Administrative Code*, as amended.

WMP-200, *Waste Management Project Procedures*, Section 5.1, "Training and Qualification Program," Rev. 11, Fluor Hanford, Inc., Richland, Washington.

WMP-370, *Waste Services Procedures*, Section 1.10, "Verification Program," Rev. 5, Fluor Hanford, Inc., Richland, Washington.

APPENDIX A

DATA VALIDATION FORM

APPENDIX A

DATA VALIDATION FORM

Data Validation Checklist		
LDC Identification Number(s):		
Data Quality Attribute	**Attribute Criteria**	**Decision**
The measurements are representative of the waste.	Level and weight measurements, visual observation and inspection, and liquid removal documentation establishes identity and integrity with each LDC.	☐ yes ☐ no
The waste measurements are comparable.	Level and weight measurements, visual observation and inspection, and liquid removal were performed per procedures and noncon-formances have been resolved.	☐ yes ☐ no
The measurement accuracy is within accept-able limits.	Weigh scale and level instruments are calibrated. Prior to use for visual observation the video camera resolution is checked and adjusted as needed.	☐ yes ☐ no
The measurement precision is within accept-able limits	Weigh scale and level instruments are calibrated. Prior to use for visual observation the video camera resolution is checked and adjusted as needed.	☐ yes ☐ no
The measurement data is complete.	LDC tare weight and level measurements are valid. Empty LDC weight and level measurements are valid. Empty LDC visual observation video is valid. Grouted LDC visual inspection is valid Grouted LDC weight measurement is valid. Liquid has been removed from filter pipe manifold	☐ yes ☐ no
The measurement detection limit is acceptable	Weigh scale and level instruments are calibrated. Prior to use for visual observation the video camera resolution is checked and adjusted as needed.	☐ yes ☐ no
Data for LDC(s) meet quality requirements and are valid for use for decision making.		☐ yes ☐ no
Assessor Comments and Notes:		
Assessor Certification Print Name, sign, and date:		

The acceptable detection limit is 70% (lower limit of accuracy) of estimated drum of treated sludge inventory when treated sludge is a NRC class C limit (73 nCi/g TRU)