START 9513388.1771 0042071 180

8/31/95 Sta. 37 35

ENGINEERING DATA TRANSMITTAL

Page 1 of 1

1. EDT 136779

2. To: (Receiving Organization) Distribution	3. From: (Originating Organization) Liquid Effluents Engineering 86300
4. Related EDT No.: N|A	
5. Proj./Prog./Dept./Div.: PSS|LES	6. Cog. Engr.: FN McDonald
7. Purchase Order No.: N|A	
8. Originator Remarks: APPROVAL|RELEASE Do not attach Appendix B for distribution unless the Distribution Sheet indicates both text and all attachments are to be distributed.	9. Equip./Component No.: N|A
	10. System/Bldg./Facility: 2025E|ETF
11. Receiver Remarks:	12. Major Assm. Dwg. No.: N|A
	13. Permit/Permit Application No.: N|A
	14. Required Response Date: N|A

15. DATA TRANSMITTED

(A) Item No.	(B) Document/Drawing No.	(C) Sheet No.	(D) Rev. No.	(E) Title or Description of Data Transmitted	(F) Impact Level	(G) Reason for Transmittal	(H) Originator Disposition	(I) Receiver Disposition
1	WHC-SD-C018H-TRP-016		0	Filtration Testing at the LERF	NA ~~4~~	1		

16. KEY

Impact Level (F)	Reason for Transmittal (G)		Disposition (H) & (I)	
1, 2, 3, or 4 (see MRP 5.43)	1. Approval	4. Review	1. Approved	4. Reviewed no/comment
	2. Release	5. Post-Review	2. Approved w/comment	5. Reviewed w/comment
	3. Information	6. Dist. (Receipt Acknow. Required)	3. Disapproved w/comment	6. Receipt acknowledged

17. SIGNATURE/DISTRIBUTION (See Impact Level for required signatures)

(G) Reason	(H) Disp.	(J) Name	(K) Signature	(L) Date	(M) MSIN	(J) Name	(K) Signature	(L) Date	(M) MSIN	(G) Reason	(H) Disp.
1	1	Cog. Eng. F.N. McDonald	F N McDonald	8/29/95	H6-28						
1	1	Cog. Mgr. J.D. Williams		8/29/95	H6-28						
		QA									
		Safety									
1	1	Env. D.L. Flyckt		8/29/95	S6-71						

OCT 1995 RECEIVED EDMC

18.	19.	20.	21. DOE APPROVAL (if required)
F N McDonald 8/29/95 Signature of EDT Originator Date	N/A Authorized Representative for Receiving Organization Date	Cognizant Manager Date 8/29/95	Ltr No. ☐ Approved ☐ Approved w/comments ☐ Disapproved w/comments

BD-7400-172 (07/91)

9513388.1772

RELEASE AUTHORIZATION

Document Number:	WHC-SD-C018H-TRP-016, Rev. 0
Document Title:	Filteration Testing at the LERF
Release Date:	August 31, 1995

This document was reviewed following the procedures described in WHC-CM-3-4 and is:

APPROVED FOR PUBLIC RELEASE

WHC Information Release Administration Specialist:

T.L. Ontiveros — August 31, 1995

TRADEMARK DISCLAIMER. Reference herein to any specific commercial product, process, or service by trade name, trademark, manufacturer, or otherwise, does not necessarily constitute or imply its endorsement, recommendation, or favoring by the United States Government or any agency thereof or its contractors or subcontractors.

This report has been reproduced from the best available copy. Available in paper copy. Printed in the United States of America. To obtain copies of this report, contact:

Westinghouse Hanford Company - Document Control Services
P.O. Box 1970, Mailstop H6-08, Richland, WA 99352
Telephone: (509) 372-2420; Fax: (509) 376-4989

9513388.1773

SUPPORTING DOCUMENT

1. Total Pages 168

2. Title	3. Number	4. Rev No.
Filtration Testing at the LERF	WHC-SD-C018H-TRP-016	0

5. Key Words

filter
Liquid Effluent Retention Facility
Effluent Treatment Facility
backflush
process condensate
fouling

6. Author

Name: F.N. McDonald

F N McDonald

Signature

Organization/Charge Code 86300/A2049

7. Abstract

To predict the loading/backflush cycle of filter elements installed at the 200 Area Effluent treatment Facility (ETF), limited testing was conducted on 242-A Evaporator Process Condensate. Test results did not indicate filter fouling would be a problem in running the ETF.

8. RELEASE STAMP

OFFICIAL RELEASE
BY WHC
DATE 8/31/95
Sta 37 35

A-6400-073 (08/94) WEF124

9513388.1774

WHC-SD-C018H-TRP-016, Rev 0

FILTRATION TESTING AT THE LERF

Issued by

Westinghouse Hanford Company

for the

U.S. DEPARTMENT OF ENERGY, RICHLAND OPERATIONS OFFICE
RICHLAND, WASHINGTON

August 1995

EXECUTIVE SUMMARY

To predict the loading/backflush cycle of filter elements installed at the 200 Area Effluent Treatment Facility (ETF), filter testing was conducted on 242-A Evaporator Process Condensate (PC). The PC constitutes the major waste water stream to be treated at the ETF, beginning Fall/Winter 1995. Currently stored at the Liquid Effluent Retention Facility (LERF), the PC was pumped out of LERF basin #43 into a test skid, where the pH was adjusted to 6 prior to filtration. Over the four and a half days of testing in March 1995, pressure drop across the filter remained well below the set point for backwashing the filter. This meant there was no indication filter fouling would be a problem at the ETF. Consequently, a decision was made to put further testing on hold. Subsequent to this decision, bacterial populations have been observed to be increasing. However, it is still unknown if the higher bacterial populations will present a significant filtration problem to the ETF filters.

9513388.1776

EXECUTIVE SUMMARY ii

1.0 Description of the Test 1

2.0 Summary of First Phase Testing 2

3.0 First Phase Test Results 2

4.0 First Phase Test Data Limitations 3

5.0 Test Conclusions 4

6.0 Future Action 4

7.0 References 4

Appendix A Data Copied from Recording Charts A-1

Appendix B Analytical Data and Sample Point Locations B-1

Filtration Testing at the LERF

1.0 Description of the Test

Background

The 200 Area Effluent Treatment Facility (ETF) will treat process condensate (PC) produced by the 242-A Evaporator. PC is stored at the Liquid Effluent Retention Facility (LERF) in two 6.5 million gallon basins. A third basin is available as a spare. Since PC was to be stored in the LERF basins for more than one year prior to starting the ETF, there was a concern that biological growths would occur. These growths might lead to a condition where biofouling would become a problem for filters within the ETF. Therefore, a test plan (WHC 1994) was developed to probe for the potential of the stored PC to foul ETF filters. The test plan called for conducting filtration tests in two 5-day phases, separated by six months, a Winter/Spring phase and a Summer/Fall phase.

Filter Skid

Filter test equipment was housed in a specially built test skid. Located next to basin #43, the skid was designed as an enclosed mobile structure, housing a pH adjustment unit and filter unit, along with associated pumps, flow meters, valves, and data recording equipment. At a scale of about 1/40th, the test skid was intended to mimic the rough filter installed at the ETF. Operation of the test skid was and still is regulated under an EPA Waste Water Pilot Plant Research, Development, and Demonstration (RD&D) Permit (EPA 1994). The RD&D permit is in force until June 1998. As of this writing, the skid remains next to basin #43 at the LERF.

The filter unit houses eight Pall Corporation "Prosep" wound polymeric elements rated at 8 microns absolute (2 microns nominal). When the pressure drop across the filter elements reaches 35 psi, filtrate water automatically is used to backwash the filter. Note that this operation is slightly different in the ETF where air is used in a blowback cycle.

Overall Process

Process condensate (PC) originating from the 242-A Evaporator was pumped out of LERF basin #43 into the skid, where the pH was adjusted to 6 prior to filtration. Filtrate and backflush liquids (if any) from the filter were subsequently recombined and returned to a different point in the LERF basin. Flow rate, pH, temperature, and pressure drop across the filter were automatically recorded while the skid was in operation. Turbidity of the filter inlet and filtrate streams were automatically recorded.

The test plan called for samples (see Appendix B for sample points) of the filter inlet and filtrate streams to be taken to analyze for total suspended solids (TSS), total dissolved solids (TDS), particle size, and biological count. One-time inductively coupled plasma (ICP) and common ion analyses were

also called for by the test plan to determine some of the dissolved constituents (such as: metals, Cl^-, F^-, NO_{3-}, NO_{2-}, ortho PO_{4-}, SO_{4-}, and alkalinity expressed as $CaCO_3$ of bicarbonate, carbonate and hydroxide).

The filter test was intended to characterize the loading/backflush cycle of the Prosep filter elements. If the collected data were of sufficient quantity and quality, the useful life of the filter (i.e., the time it takes for irreversible fouling to occur) would be estimated. Note that fouling at the ETF would also have a bearing on secondary waste production, since chemicals used to clean the filter would end up in the waste water, thereby adding to the overall dissolved solids content of the waste water.

Analyses for TSS, particle size, and biological count were intended to measure the character of the waste water constituents, as well as, the efficiency with which they could be removed by the filter. It was recognized that the LERF basin contents might not be homogenous, hence the importance of periodically determining the influent concentration of these parameters. Analyses for TDS and dissolved constituents via ICP were intended to characterize the LERF contents, primarily to confirm consistency with expected ETF influent conditions. The analysis for turbidity was intended to monitor for filter breakthrough. Although turbidity could also be used as a very gross indicator of biological activity, it was not recorded for this purpose.

The test was not intended to collect data on how to clean the filter elements, nor was it intended to determine the amount of organic material that might carry over into the secondary waste system of ETF.

2.0 Summary of First Phase Testing

The first phase of testing was started on March 8th and run for four days while recording flow rate, pH, temperature, pressure drop, and turbidity. However, because of equipment problems, not all scheduled sampling occurred, as originally called for by the test plan. Consequently, limited analytical data were generated.

Equipment problems started when a transformer on the skid failed and shut down the experiment late on March 12th. Approximately three weeks later after repairs, the test was resumed on March 29th only to shut down in 14 hours. Apparently, the filter inlet pump failed. It is believed pieces of the pump became lodged in valves that were to automatically close if water backed up in catch pans. A non-reportable quantity spill then resulted because the drain line from the catch pans back into the LERF basin was vapor locked. During construction, the line had not been cut to a proper length to avoid the vapor lock.

3.0 First Phase Test Results

The test filter was run between 3.3 and 3.9 gpm. Pressure drop varied between 9.2 and 13.0 psi over both test periods (i.e., March 12th and 29th). Feed temperature varied from 43 to 47 °F over both test periods. Feed turbidity

varied between 2.2 and 5.7 Nephlemetric Turbidity Units (NTUs) over the first four days (the March 12th period), and rose over the next 12 hours (the March 29th period) from 12.3 to 16 NTUs. Filtrate turbidity varied between 0.4 and 1.8 NTUs over the first test period. Over the second test period, filtrate varied between 1.1 and 1.6 NTUs. Note, as a reference point, drinking water at Hanford is typically 2.4 NTUs. Appendix A consists of data copied from recording charts covering the March 12th and 29th test periods.

4.0 First Phase Test Data Limitations

The intended data set was not produced because of equipment problems. In particular, only one analysis of TDS and one analysis of dissolved constituents were produced, except for metals for which several were produced. No conclusions could be drawn from the ICP metals analyses, except that calcium and sodium were definitely present. A set of the ICP analyses are included as Appendix B. The same appendix contains a subset of analyses for "common ions and additional analytes."

Several analyses were done with procedures that failed to produce useful data. In particular, the analytical detection limit for TDS was too high, and a procedure used to determine the particle size distribution of soils was used instead of one for colloids. Note that colloids are considered to range in size from 0.001 to 1.0 micron.

The turbidity of the feed to the filter (and to a much lesser extent, that of the filtrate) increased between the March 12th and 29th test periods. There was some speculation that this was due to increasing biological activity in the LERF basins. However, there was no evidence of increased biological activity in the LERF basins during first phase testing (see below). Another more plausible explanation is the filter test skid began growing bacteria and/or algae in the vessels and/or instruments to bias the data. In particular, the turbidity probes were kept wetted between test periods. Although, the probes were removed to confirm by visual means that they were clean before proceeding with the second period of testing, the probe reservoirs and the probes themselves were not cleaned. Note that the none of the recorded turbidities were believed to be high enough to cause filter fouling. It is estimated that the maximum recorded turbidities would have had to be higher by 100% to be seen by the naked eye in a clear vessel.

No biological data associated with this test were collected. However, a program was in place during the first phase testing to monitor LERF basin #43 for biogrowth. Note that the biogrowth study was not intended to directly determine the fouling potential of bacteria within the LERF basins. Having started in the Fall of 1994, the study did not find bacterial populations (total live and dead) increasing from Fall to Spring. In fact, the concentration of live bacteria actually fell over this period. This information and the lack of any pressure drop data showing filter fouling led engineers to recommend that the second phase of filter testing be indefinitely postponed. As of this writing, the equipment remains next to LERF basin #43 and can be reactivated to perform additional tests, if necessary.

However, biomonitoring data taken in July and August of 1995 showed the bacterial population increased significantly. Although a final report is not available at the time of this writing, this indicates that the ETF will start up in the Fall of 1995 to treat PC that differs from that tested during March 1995.

5.0 Test Conclusions

First phase test results did not indicate increased pressure drop across the 8 micron "Prosep" filter over the two March test periods. In fact, not one backwash cycle occurred. However, preliminary data from an on-going biogrowth study shows that bacterial activity has increased since the testing ended. This is probably due to the ambient temperatures of July and August being warmer than March when the testing took place. Unfortunately, definitive conclusions about biofouling potential may not be possible prior to the ETF start up.

6.0 Future Action

The test plan was written for two one-week tests to be run in the Winter/Spring and Summer/Fall of 1995, respectively. However, the second test was indefinitely postponed when no evidence of fouling was found in the first test, and biogrowth appeared to be declining. If after operating the ETF, filter fouling occurs, then further testing may be performed at the LERF to search for solutions.

7.0 References

1. WHC 1994, Moberg, T.P., *C-018 LERF Filtration Test Plan*, WHC-SD-C018H-TP-010, Rev 1, Westinghouse Hanford Company, Richland, Washington, August 1994.

2. EPA 1994, U.S. Environmental Protection Agency, *Final Joint Permit for Dangerous Waste Research, Development and Demonstration Treatment and Storage Activity*, Permit No. WA7 89000 8967, June 6, 1994.

This page left intentionally blank.

Appendix A Data Copied from Recording Charts

Filter Unit Data

Date	Time	Flow Rate gpm	Feed Press psi	Filtrate Press psi	Feed Temp °F	Filtrate Turbidity NTUs	Feed Turbidity NTUs	Press Drop psi
3/8	21:34	0.17	6.8	0.4	43.8	0.8	3.6	6.4
	22:54	3.78	13.3	0.9	44.5	0.4	2.3	12.4
3/9	00:14	3.79	13.6	0.8	44.5	0.5	2.3	12.6
	1:34	3.81	13.4	0.4	44.7	0.5	2.3	13.0
	2:54	3.81	13.2	0.3	44.3	0.5	2.2	12.9
	4:14	3.83	13.2	0.5	44.3	0.4	2.3	12.7
	5:34	3.86	13.1	1.5	44.4	0.4	2.2	11.3
	6:54	3.88	13.4	1.1	44.4	0.4	2.2	12.3
	8:14	3.81	13.8	0.8	44.5	0.5	2.2	13.0
	9:34	3.83	13.3	0.6	44.6	0.6	2.4	12.7
	10:54	3.82	13.7	1.3	44.8	0.6	2.4	12.4
	12:14	3.83	13.4	1.1	45.1	0.6	2.4	12.3
	13:34	3.83	13.4	0.9	44.9	0.7	2.4	12.5
	14:54	3.83	13.7	1.3	45.3	0.7	2.6	12.4
	16:14	3.81	13.5	0.5	45.8	0.5	2.5	13.0
	17:34	3.82	13.9	1.3	45.3	0.5	2.5	12.6
	18:54	3.81	13.5	1.3	45.0	0.5	2.5	12.2
	20:14	3.78	13.8	1.3	45.5	0.6	2.6	12.5
	21:34	3.79	14.0	1.9	45.8	0.5	2.5	12.1
	22:54	3.77	13.5	1.5	45.4	0.5	2.5	12.0
3/10	00:14	3.76	13.8	1.8	45.6	0.5	2.6	12.0
	1:34	3.75	13.8	1.6	45.1	0.5	2.6	12.2
	2:54	3.70	13.8	1.9	44.9	0.4	2.6	11.9
	4:14	3.70	13.9	2.3	44.6	0.4	2.5	11.6
	5:34	3.75	13.4	1.8	44.7	0.4	2.5	11.6

Date	Time	Flow Rate gpm	Feed Press psi	Filtrate Press psi	Feed Temp °F	Filtrate Turbidity NTUs	Feed Turbidity NTUs	Press Drop psi
	6:54	3.69	14.0	2.3	44.6	0.4	2.6	11.7
	8:14	3.71	13.8	2.4	44.9	0.5	2.7	11.4
	9:34	3.68	13.9	2.4	44.9	0.5	2.8	11.5
	10:55	---	---	---	---	---	---	---
	12:15	3.67	14.2	2.7	45.1	0.7	3.0	11.5
	13:35	3.68	13.7	2.5	45.4	0.7	3.1	10.6
	14:55	3.65	14.3	3.1	45.5	0.6	3.0	11.3
	16:15	3.64	13.9	2.4	45.4	0.6	3.0	10.9
	17:35	3.62	14.1	2.8	45.5	0.5	2.9	11.2
	18:55	3.61	13.8	3.0	45.4	0.5	2.9	10.9
	20:15	3.59	13.8	3.0	45.4	0.5	3.0	10.8
	21:35	3.61	13.9	3.0	45.5	0.5	3.0	10.9
	22:55	3.58	14.1	3.6	45.9	0.5	3.1	11.1
3/11	00:15	3.57	14.1	3.3	45.6	0.6	3.1	11.0
	01:35	3.56	13.9	3.2	45.4	0.6	3.2	10.2
	2:55	3.54	14.4	3.9	45.2	0.6	3.2	11.2
	4:15	3.52	14.2	3.9	45.3	0.5	3.2	11.0
	5:35	3.51	14.3	3.8	44.8	0.5	3.2	11.1
	6:55	3.50	14.3	3.9	44.5	0.4	3.2	11.1
	8:15	3.51	14.7	4.6	45.0	0.5	3.3	11.4
	9:35	3.49	14.1	4.5	45.4	0.9	3.6	10.5
	10:55	3.48	14.8	4.2	45.6	1.8	3.8	11.0
	12:15	3.49	14.3	3.6	46.1	1.2	3.9	10.4
	13:35	3.46	15.2	4.8	45.6	1.3	4.0	11.2
	14:55	3.45	14.7	4.2	46.8	1.2	4.0	10.7
	16:15	3.44	14.7	3.9	46.7	1.2	4.0	10.7
	17:35	3.44	14.5	4.7	46.9	1.0	3.9	10.6

Date	Time	Flow Rate gpm	Feed Press psi	Filtrate Press psi	Feed Temp °F	Filtrate Turbidity NTUs	Feed Turbidity NTUs	Press Drop psi
	18:55	3.42	14.4	4.4	46.6	0.8	3.7	10.0
	20:15	3.43	14.5	4.9	46.1	0.7	3.7	9.6
	21:35	3.4	14.7	5.2	46.0	0.7	3.8	9.5
	22:55	3.38	15.0	5.4	46.1	0.7	3.9	9.6
3/12	00:15	3.39	14.7	5.1	45.7	0.7	4.0	9.6
	1:35	3.37	14.7	5.0	45.9	0.7	4.0	9.7
	2:55	3.36	14.4	5.0	45.7	0.7	4.0	9.4
	4:15	3.37	14.9	5.2	45.6	0.7	4.2	9.7
	5:35	3.34	15.1	5.6	45.6	0.7	4.2	9.5
	6:55	3.34	14.7	5.0	45.4	0.7	4.3	9.7
	8:15	3.34	15.2	5.8	45.3	0.8	4.5	9.4
	9:35	3.35	15.1	5.7	45.8	1.0	4.8	9.4
	10:55	3.35	15.1	5.7	46.2	1.3	5.1	9.4
	12:15	3.35	15.2	5.8	46.3	1.3	5.2	9.4
	13:35	3.34	15.4	5.7	46.3	1.4	5.4	9.7
	14:55	3.32	15.1	5.8	47.1	1.5	5.5	9.3
	16:15	3.34	15.6	6.1	46.6	1.3	5.4	9.5
	17:35	3.32	15.0	5.6	47.2	1.5	5.7	9.4
	18:55	3.30	15.0	5.6	46.2	1.2	5.6	9.4
	20:15	3.31	15.5	5.8	46.2	1.0	5.6	9.7
	21:35	3.31	15.0	5.8	45.8	1.0	5.7	9.2
	chart ends 17:30 on 3/18	chart falls to near zero	chart falls to near zero				turbidity rises to a high of 9.2 and ends at 7.9	
3/28	09:51	---	---	---	---	---	---	---

Date	Time	Flow Rate gpm	Feed Press psi	Filtrate Press psi	Feed Temp °F	Filtrate Turbidity NTUs	Feed Turbidity NTUs	Press Drop psi
	11:11	---	---	---	60.7	3.3	9.0	---
	11:45	---	---	---	---	---	---	---
	13:05	---	---	---	51.2	1.4	8.5	---
	16:28	---	---	---	59.5	1.4	8.4	---
	17:48	---	---	---	69.5	1.3	8.5	---
	19:08	---	---	---	68.9	1.1	8.6	---
	20:28	---	---	---	64.3	0.8	8.8	---
	21:48	---	---	---	61.1	0.7	9.1	---
	23:08	---	---	---	58.1	0.7	9.3	---
3/29	00:28	---	---	---	56.7	0.7	9.6	---
	1:48	---	---	---	55.3	0.7	9.9	---
	3:08	---	---	---	53.2	0.7	10.1	---
	4:28	---	---	---	51.9	0.6	10.4	---
	5:48	---	---	---	50.3	0.7	10.6	---
	7:08	---	---	---	49.5	0.7	10.9	---
	8:28	---	---	---	54.2	1.0	11.3	---
	10:24	---	---	---	---	---	---	---
	11:54	---	---	---	53.9	6.1	11.6	
	11:51	4.85	---	---	---	---	---	---
	12:13	reset to 3.72						
	13:64	3.72	14.9	2.7	46.3	1.5	12.3	12.2
	14:24	3.70	15.0	3.3	46.5	1.6	12.8	11.7
	15:44	3.67	14.9	3.5	46.8	1.6	13.3	11.4
	17:04	3.66	14.8	3.6	46.6	1.6	13.7	11.2
	18:24	3.62	14.8	3.7	46.4	1.6	14.2	11.1
	19:44	3.61	14.8	4.0	46.1	1.3	14.4	10.8

Date	Time	Flow Rate gpm	Feed Press psi	Filtrate Press psi	Feed Temp °F	Filtrate Turbidity NTUs	Feed Turbidity NTUs	Press Drop psi
	21:04	3.61	14.7	4.3	46.0	1.2	14.7	10.4
	22:24	3.57	14.9	4.3	45.8	1.2	15.2	10.6
	23:44	3.55	15.0	4.6	45.6	1.2	15.6	10.4
3/30	01:04	3.55	15.0	4.4	45.3	1.1	16.0	10.6
	02:24	---	---	---	43.6	1.2	16.4	---
	end							

pH Adjustment Unit Data

Date	Time	Feed pH	pH, First Stage tank	pH, Second Stage Tank	pH Tank Level
	Data shows wild swings in pH starting at 12:56				
3/9	12:56	7.58	7.19	5.95	3.95
	14:16	6.74	7.12	5.92	3.95
	15:36	13.58	7.14	5.93	35.24
	16:56	13.28	18.79	9.58	42.42
	18:16	12.87	10.32	8.52	42.46
	19:36	12.78	7.18	5.14	42.47
	20:56	12.72	9.22	7.41	37.78
	22:16	12.66	9.28	7.88	38.75
	23:36	12.67	8.05	7.82	38.50
3/10	00:56	12.64	7.45	6.45	38.24
	2:16	12.63	9.02	7.62	37.75
	3:36	12.61	7.42	6.68	37.26
	4:56	12.61	8.41	7.29	37.03

Date	Time	Feed pH	pH, First Stage tank	pH, Second Stage Tank	pH Tank Level
	6:16	12.63	9.87	8.03	36.77
	7:36	12.61	7.91	7.56	36.25
	8:56	12.68	9.26	8.17	36.01
	10:16	12.61	6.51	7.30	36.00
	11:36	12.61	8.55	7.74	36.23
	12:56	12.61	7.83	7.87	37.73
	Wild swings in pH are finally eliminated				
	14:16	12.68	8.17	5.81	41.43
	15:36	12.60	8.17	6.09	41.65
	16:56	12.60	8.15	6.10	41.64
	18:16	12.59	8.14	6.12	41.38
	19:36	12.57	8.14	6.14	41.59
	20:56	12.57	8.13	6.28	41.61
	22:16	12.61	8.16	6.18	41.62
	23:36	12.59	8.16	6.21	41.62
3/11	00:56	12.59	8.17	6.21	41.64
	2:16	12.61	8.17	6.24	41.68
	3:36	12.64	8.18	6.26	41.69
	4:56	12.65	8.18	6.23	41.69
	6:16	12.64	8.16	6.21	41.70
	7:36	12.64	8.19	6.15	41.69
	8:56	12.68	8.18	6.16	41.65
	off-line at 9:11				

Date	Time	Feed pH	pH, First Stage tank	pH, Second Stage Tank	pH Tank Level
3/29	9:37		Wild swings in pH of 1st tank begin		
	10:57	13.50	7.68	5.70	37.73
	12:17	13.23	7.63	5.45	42.41
	13:37	13.10	7.59	6.12	42.41
	14:57	12.97	7.50	8.83	40.67
			Wild swings abate		
	16:17	12.16	6.43	5.54	41.65
	17:37	12.01	6.36	5.51	41.65
	18:57	11.05	6.33	5.46	41.70
	20:17	11.43	6.32	5.45	41.74
	21:37	11.53	6.30	5.42	41.76
	22:57	11.72	6.28	5.42	41.77
3/30	00:17	11.75	6.28	5.42	41.80
	01:37	11.38	6.28	5.42	41.82
	2:57	11.47	6.28	5.40	41.85
	4:17	11.65	6.28	5.42	41.85
	5:37	11.38	6.29	5.41	41.87
	6:57	11.90	6.29	5.42	41.83
	8:17	11.96	6.38	5.44	41.77
	Data become erratic at 8:37				
3/31	1:37	Filter pump turned off			

Appendix B Analytical Data and Sample Point Locations

9513388.1785

WHC-SD-C018H-TRP-016, Rev 0

Lockheed Analytical Services

Mr. Karl Pool
Westinghouse Hanford Company
345 Hill
Richland, WA 99352

ANALYTICAL DATA REPORT

FOR

METALS, TSS, CHLORIDE, PHOSPHATE,
NITRATE, NITRITE, SULFATE, AND FLUORIDE

LOG-IN NUMBER:	L4046
QUOTATION NUMBER:	Q400000
SAF:	95-035
DOCUMENT FILE NUMBER:	0315512
WHC DOCUMENT CONTROL NUMBER:	188
SDG NUMBER:	LK4046

B- 0001

LOCKHEED ANALYTICAL SERVICES

WHC-SD-C018H-TRP-016, Rev 0

Table of Contents

SDG Number LK4046

Client Name: Westinghouse Hanford **SAF No.: 95-035**

Cover Page 1

Document Content 2

Case Narrative 3

Data Qualifiers 8

Chain of Custody 9

Non-Metals Results 42

Non-Metals Calibration and QC Summaries 65

Data Summary for Total Metals 91

A. Inorganic Analyses Data Sheet 92
B. Method Blank 110
C. Duplicate Sample 111
D. Spiked Sample Recovery 112
E. Laboratory Control Sample 113

Subcontracted Data 114

Lockheed
Environmental Systems & Technologies Co.
Lockheed Analytical Services
975 Kelly Johnson Drive
Las Vegas, Nevada 89119-3705

Phone: (702) 361-0220
Phone: (800) 582-7605
Fax: (702) 361-8146

March 28, 1995

Mr. Karl Pool H4-23
Westinghouse Hanford Company
P.O. Box 1970
Richland, WA 99352

RE:	Log-in No:	L4046
	Quotation No:	Q400000
	Document File No:	0315512
	WHC Document Control No:	188
	SDG Number:	LK4046

The attached data report contains the analytical results of samples that were submitted to Lockheed Analytical Services on 15 March 1995.

The temperature of the coolers upon receipt were 6°C. Sample containers received agree with the chain-of-custody documentation. Sample containers were received intact. Samples were not received in time to meet the analytical holding time requirements. All discrepancies identified upon receipt of the samples have been forwarded to the client and are documented in the enclosed chain-of-custody records.

The case narratives included in the following attachments provide a detailed description of all events that occurred during sample preparation, analysis, and data review specific to the samples and analytical methods requested.

A list of data qualifiers, chain-of-custody forms, sample receiving checklist, and log-in report are also enclosed representing the samples received within this group.

If you have any questions concerning the analysis or the data please call Kathleen Hall at (509) 943-4423.

Release of this data report has been authorized by the Laboratory Director or the Director's designee as evidenced by the following signature.

" I certify that this data package is in compliance with the SOW, both technically and for completeness, for other than the conditions detailed above. Release of the data contained in this hard copy data package has been authorized by the Laboratory Manger or a designee, as verified by the following signature."

Sincerely,

James Nolan

for Kathleen M. Hall
Client Services Representative

cc: Client Services
Document Control

CASE NARRATIVE
INORGANIC NON METALS ANALYSES

The routine calibration and quality control analyses performed for this batch include as applicable: initial and continuing calibration verification, initial and continuing calibration blanks, method blank(s), laboratory control sample(s), matrix spike sample(s), and duplicate sample(s).

Preparation and Analysis Requirements

- Eighteen water samples were received for LK4046 and prepared as batch 315WH and analyzed for selected analytes as requested on the chain of custody. Quality control analysis was performed on the following sample:

Client ID	LAL #		Method
BOF655	L4046-59	DUP	160.1 Total Dissolved Solids
	L4046-58	DUP	160.2 Total Suspended Solids
	L4046-60	MS, DUP	300.0 Chloride, Fluoride, Nitrate-N, Nitrite-N, Orthophosphate, Sulfate
	L4046-61	DUP	310.1 Alkalinity

Holding Time Requirements

- All samples were analyzed within the specified holding time, except Method 300.0 Nitrate-N, Nitrite-N and Orthophosphate which were received from the client out of holding time. Analyses proceeded at the direction of the client and the applicable samples are flagged with an "H".

Method Blanks

- The concentration levels of all the requested analytes in the method blank were below the reporting detection limits.

Internal Quality Control

- All Internal Quality Control were within acceptance limits.

Kay McCann — March 26, 1995

Prepared By — **Date**

CASE NARRATIVE
INORGANIC METALS ANALYSES

The routine calibration and quality control analyses performed for this batch include as applicable: instrument tune (ICP/MS only), initial and continuing calibration verification, initial and continuing calibration blanks, method blank(s), laboratory control sample(s), ICP interference check samples (ICP only), serial dilutions, analytical (post-digestion) spike samples, matrix spike (predigestion) sample(s), duplicate sample(s).

Preparation and Analysis Requirements

All samples were received on March 15, 1995. The samples were logged in as L4046 and were prepared and analyzed in batch 315 wh.

Holding Times-

All samples were analyzed within the method-specific holding times.

Method Blanks-

The method blanks were free of contamination.

Internal Quality Control-

All Internal Quality Control were within acceptance limits with the following exception: The matrix spike recovery for mercury (20%) was outside of the ±25% acceptance limits. The recovery based on the LCS (112%) supports that the analytical system was operating within control limits.

The duplicate sample precision for iron was outside of acceptance limits (24%). All associatd samples are flagged with an "*".

Shellee McGrath
Prepared By

March 27, 1995
Date

SwRI Case Narrative
Lockheed Analytical Laboratory SDG L4046

1. Eighteen (18) Water Samples for Particle Size Analysis:

SwRI ID	Customer ID	SwRI ID	Customer ID
51295	BOF670	51307	BOF659
51297	BOF673	51308	BOF657
51298	BOF671	51309	BOF660
51299	BOF674	51310	BOF661
51300	BOF672	51311	BOF664
51301	BOF675	51312	BOF662
51302	BOF655	51313	BOF665
51303	BOF658	51314	BOF663
51305	BOF656	51315	BOF666

2. Samples were received at SwRI on March 17, 1995 for a ten (10) day turnaround time from Validated Time of Sample Receipt (VTSR).

3. Electronic diskette enclosed. Diskette has been scanned and found free of viruses.

PARTICLE SIZE ANALYSIS

1. Samples were analyzed by ASTM Method D422.

2. All analyses met required criteria.

"I certify that this data package is in compliance with the terms and conditions of the contract, both technically and for completeness, for other than the conditions detailed above. Release of the data contained in this hardcopy data package has been authorized by the Director or his designee, as verified by the following signature."

Jo Ann Boyd 3/24/95

Jo Ann Boyd, Date
Group Leader
Quality Assurance Unit,
Division 01

Lockheed Analytical Services

DATA QUALIFIERS FOR INORGANIC ANALYSES

[Revised 08/28/92]

For Use on the Analytical Data Reporting Forms	
B	*For CLP Analyses Only* -- Reported value is less than the contract required detection limit (CRDL) but greater than or equal to the instrument detection limit (IDL).
C	*For Routine, Non-CLP Analyses Only* -- Any constituent that was also detected in the associated blank whose concentration was greater than the reporting detection limit (RDL).
D	Presence of high levels of interfering constituents required dilution of sample which increased the RDL by the dilution factor.
E	Estimated value due to presence of interference.
H	Sample analysis performed outside of method-or client-specified maximum holding time requirement.
M	*For CLP Analyses Only* -- Duplicate injection precision criterion was not met.
N	Matrix spike recovery exceeded acceptance limits.
S	Reported value was determined from the method of standard addition.
U	*For CLP Reporting Only* -- Constituent was analyzed for but not detected (sample quantitation must be corrected for dilution and percent moisture).
W	*For AAS Only* -- Post-digestion spike for Furnace AAS did not meet acceptance criteria and sample absorbance is less than 50% of spike absorbance.
X, Y, or Z	Analyst-defined qualifier.
*	Relative percent difference (RPD) for duplicate analysis exceeded acceptance limits.
+	Correlation coefficient (r) for the MSA is less than 0.995.
For Use on the QC Data Reporting Forms	
a[1]	The spike recovery and/or RPD for matrix spike and matrix spike duplicates cannot be evaluated due to insufficient spiking level compared to the elevated sample analyte concentration.
b[1]	The RPD cannot be computed because the sample and/or duplicate concentration was below the RDL.

[1] Used as footnote designations on the QC summary form.

Lockheed

CHAIN OF CUSTODY

LOGIN CHAIN OF CUSTODY REPORT (ln01)
Mar 15 1995, 05:20 pm

WHC-SD-C018H-TRP-016, Rev 0

Login Number: L4046
Account: 512 Westinghouse Hanford Co. * Richland, WA
Project: WESTINGHOUSE-HANFORD Westinghouse Hanford Project (Richland,WA)

Laboratory Sample Number	Client Sample Number	Collect Date	Receive Date	PR	Due Date
L4046-1	B0F671	12-MAR-95	15-MAR-95		30-MAR-95
TEMP 6 "SAF # 95-035"					
Location: RFG01-43B					
Water 1 S SCREENING		Hold:08-SEP-95			
L4046-2	B0F674	12-MAR-95	15-MAR-95		30-MAR-95
TEMP 6 "SAF # 95-035"					
Location: RFG01-43B					
Water 1 S SCREENING		Hold:08-SEP-95			
L4046-3	B0F672	12-MAR-95	15-MAR-95		30-MAR-95
TEMP 6 "SAF # 95-035"					
Location: RFG01-43B					
Water 1 S SCREENING		Hold:08-SEP-95			
L4046-4	B0F675	12-MAR-95	15-MAR-95		30-MAR-95
TEMP 6 "SAF # 95-035"					
Location: RFG01-43B					
Water 1 S SCREENING		Hold:08-SEP-95			
L4046-5	B0F670	12-MAR-95	15-MAR-95		30-MAR-95
TEMP 6 "SAF # 95-035"					
Location: RFG01-43B					
Water 1 S SCREENING		Hold:08-SEP-95			
L4046-6	B0F673	12-MAR-95	15-MAR-95		30-MAR-95
TEMP 6 "SAF # 95-035"					
Location: RFG01-43B					
Water 1 S SCREENING		Hold:08-SEP-95			
L4046-7	B0F656	10-MAR-95	15-MAR-95		30-MAR-95
TEMP 6 "SAF # 95-035"					
Location: RFG01-43B					
Water 1 S SCREENING		Hold:06-SEP-95			
L4046-8	B0F659	10-MAR-95	15-MAR-95		30-MAR-95
TEMP 6 "SAF # 95-035"					
Location: RFG01-43B					
Water 1 S SCREENING		Hold:06-SEP-95			
L4046-9	B0F657	10-MAR-95	15-MAR-95		30-MAR-95
TEMP 6 "SAF # 95-035"					
Location: RFG01-43B					
Water 1 S SCREENING		Hold:06-SEP-95			

B-0010
C315512

9513388.1790

LOGIN CHAIN OF CUSTODY REPORT (ln01)
Mar 15 1995, 05:20 pm

-016

WHC-SD-C018H-TRP, Rev 0 Login Number: L4046
Account: 512 Westinghouse Hanford Co. * Richland, WA
Project: WESTINGHOUSE-HANFORD Westinghouse Hanford Project (Richland,WA)

Laboratory Sample Number	Client Sample Number	Collect Date	Receive Date	PR	Due Date
L4046-10	B0F660	10-MAR-95	15-MAR-95		30-MAR-95
TEMP 6 "SAF # 95-035"					
Location: RFG01-43B					
Water 1 S SCREENING		Hold:06-SEP-95			
L4046-11	B0F655	10-MAR-95	15-MAR-95		30-MAR-95
TEMP 6 "SAF # 95-035"					
Location: RFG01-43B					
Water 1 S SCREENING		Hold:06-SEP-95			
L4046-12	B0F658	10-MAR-95	15-MAR-95		30-MAR-95
TEMP 6 "SAF # 95-035"					
Location: RFG01-43B					
Water 1 S SCREENING		Hold:06-SEP-95			
L4046-13	B0F662	11-MAR-95	15-MAR-95		30-MAR-95
TEMP 6 "SAF # 95-035"					
Location: RFG01-43B					
Water 1 S SCREENING		Hold:07-SEP-95			
L4046-14	B0F665	11-MAR-95	15-MAR-95		30-MAR-95
TEMP 6 "SAF # 95-035"					
Location: RFG01-43B					
Water 1 S SCREENING		Hold:07-SEP-95			
L4046-15	B0F663	11-MAR-95	15-MAR-95		30-MAR-95
TEMP 6 "SAF # 95-035"					
Location: RFG01-43B					
Water 1 S SCREENING		Hold:07-SEP-95			
L4046-16	B0F666	11-MAR-95	15-MAR-95		30-MAR-95
TEMP 6 "SAF # 95-035"					
Location: RFG01-43B					
Water 1 S SCREENING		Hold:07-SEP-95			
L4046-17	B0F661	11-MAR-95	15-MAR-95		30-MAR-95
TEMP 6 "SAF # 95-035"					
Location: RFG01-43B					
Water 1 S SCREENING		Hold:07-SEP-95			
L4046-18	B0F664	11-MAR-95	15-MAR-95		30-MAR-95
TEMP 6 "SAF # 95-035"					
Location: RFG01-43B					
Water 1 S SCREENING		Hold:07-SEP-95			

B-0011

C3(5512

LOGIN CHAIN OF CUSTODY REPORT (ln01)
Mar 15 1995, 05:20 pm

WHC-SD-C018H-TRP-016, Rev 0 Login Number: L4046
Account: 512 Westinghouse Hanford Co. * Richland, WA
Project: WESTINGHOUSE-HANFORD Westinghouse Hanford Project (Richland,WA)

Laboratory Sample Number	Client Sample Number	Collect Date	Receive Date	PR	Due Date
L4046-19	B0F671	12-MAR-95	15-MAR-95		30-MAR-95
TEMP 6 "SAF # 95-035" "PARTICLE SIZE TO BE SUBCONTRACTED"					
Location: SUBCONTRACTED					
Water 1 S NONE		Hold:22-MAR-95			
L4046-20	B0F674	12-MAR-95	15-MAR-95		30-MAR-95
TEMP 6 "SAF # 95-035" "PARTICLE SIZE TO BE SUBCONTRACTED"					
Location: SUBCONTRACTED					
Water 1 S NONE		Hold:22-MAR-95			
L4046-21	B0F672	12-MAR-95	15-MAR-95		30-MAR-95
TEMP 6 "SAF # 95-035" "PARTICLE SIZE TO BE SUBCONTRACTED"					
Location: SUBCONTRACTED					
Water 1 S NONE		Hold:22-MAR-95			
L4046-22	B0F675	12-MAR-95	15-MAR-95		30-MAR-95
TEMP 6 "SAF # 95-035" "PARTICLE SIZE TO BE SUBCONTRACTED"					
Location: SUBCONTRACTED					
Water 1 S NONE		Hold:22-MAR-95			
L4046-23	B0F670	12-MAR-95	15-MAR-95		30-MAR-95
TEMP 6 "SAF # 95-035" "PARTICLE SIZE TO BE SUBCONTRACTED"					
Location: SUBCONTRACTED					
Water 1 S NONE		Hold:22-MAR-95			
L4046-24	B0F673	12-MAR-95	15-MAR-95		30-MAR-95
TEMP 6 "SAF # 95-035" "PARTICLE SIZE TO BE SUBCONTRACTED"					
Location: SUBCONTRACTED					
Water 1 S NONE		Hold:22-MAR-95			
L4046-25	B0F656	10-MAR-95	15-MAR-95		30-MAR-95
TEMP 6 "SAF # 95-035" "PARTICLE SIZE TO BE SUBCONTRACTED"					
Location: SUBCONTRACTED					
Water 1 S NONE		Hold:20-MAR-95			
L4046-26	B0F659	10-MAR-95	15-MAR-95		30-MAR-95
TEMP 6 "SAF # 95-035" "PARTICLE SIZE TO BE SUBCONTRACTED"					
Location: SUBCONTRACTED					
Water 1 S NONE		Hold:20-MAR-95			
L4046-27	B0F657	10-MAR-95	15-MAR-95		30-MAR-95
TEMP 6 "SAF # 95-035" "PARTICLE SIZE TO BE SUBCONTRACTED"					
Location: SUBCONTRACTED					
Water 1 S NONE		Hold:20-MAR-95			

B- 0012

C 31551

9513388.1791

LOGIN CHAIN OF CUSTODY REPORT (ln01)
Mar 15 1995, 05:20 pm

WHC-SD-C018H-TRP-016, Rev 0 Login Number: L4046
Account: 512 Westinghouse Hanford Co. * Richland, WA
Project: WESTINGHOUSE-HANFORD Westinghouse Hanford Project (Richland,WA)

Laboratory Sample Number	Client Sample Number	Collect Date	Receive Date	PR	Due Date
L4046-28	B0F660	10-MAR-95	15-MAR-95		30-MAR-95
TEMP 6 "SAF # 95-035" "PARTICLE SIZE TO BE SUBCONTRACTED"					
Location: SUBCONTRACTED					
Water 1 S NONE		Hold:20-MAR-95			
L4046-29	B0F655	10-MAR-95	15-MAR-95		30-MAR-95
TEMP 6 "SAF # 95-035" "PARTICLE SIZE TO BE SUBCONTRACTED"					
Location: SUBCONTRACTED					
Water 1 S NONE		Hold:20-MAR-95			
L4046-30	B0F658	10-MAR-95	15-MAR-95		30-MAR-95
TEMP 6 "SAF # 95-035" "PARTICLE SIZE TO BE SUBCONTRACTED"					
Location: SUBCONTRACTED					
Water 1 S NONE		Hold:20-MAR-95			
L4046-31	B0F662	11-MAR-95	15-MAR-95		30-MAR-95
TEMP 6 "SAF # 95-035" "PARTICLE SIZE TO BE SUBCONTRACTED"					
Location: SUBCONTRACTED					
Water 1 S NONE		Hold:21-MAR-95			
L4046-32	B0F665	11-MAR-95	15-MAR-95		30-MAR-95
TEMP 6 "SAF # 95-035" "PARTICLE SIZE TO BE SUBCONTRACTED"					
Location: SUBCONTRACTED					
Water 1 S NONE		Hold:21-MAR-95			
L4046-33	B0F663	11-MAR-95	15-MAR-95		30-MAR-95
TEMP 6 "SAF # 95-035" "PARTICLE SIZE TO BE SUBCONTRACTED"					
Location: SUBCONTRACTED					
Water 1 S NONE		Hold:21-MAR-95			
L4046-34	B0F666	11-MAR-95	15-MAR-95		30-MAR-95
TEMP 6 "SAF # 95-035" "PARTICLE SIZE TO BE SUBCONTRACTED"					
Location: SUBCONTRACTED					
Water 1 S NONE		Hold:21-MAR-95			
L4046-35	B0F661	11-MAR-95	15-MAR-95		30-MAR-95
TEMP 6 "SAF # 95-035" "PARTICLE SIZE TO BE SUBCONTRACTED"					
Location: SUBCONTRACTED					
Water 1 S NONE		Hold:21-MAR-95			
L4046-36	B0F664	11-MAR-95	15-MAR-95		30-MAR-95
TEMP 6 "SAF # 95-035" "PARTICLE SIZE TO BE SUBCONTRACTED"					
Location: SUBCONTRACTED					
Water 1 S NONE		Hold:21-MAR-95			

B- 0013

C31551

LOGIN CHAIN OF CUSTODY REPORT (ln01)
Mar 15 1995, 05:20 pm

-016

WHC-SD-C018H-TRP, Rev 0 Login Number: L4046
Account: 512 Westinghouse Hanford Co. * Richland, WA
Project: WESTINGHOUSE-HANFORD Westinghouse Hanford Project (Richland,WA)

Laboratory Sample Number	Client Sample Number	Collect Date	Receive Date	PR	Due Date
L4046-37	B0F671	12-MAR-95	15-MAR-95		30-MAR-95
TEMP 6 "SAF # 95-035"					
Location: RFG01-7B					
Water 1 S 6010 ICP METALS		Hold:08-SEP-95			
L4046-38	B0F671	12-MAR-95	15-MAR-95		30-MAR-95
TEMP 6 "SAF # 95-035"					
Location: RFG01-7B					
Water 1 S 160.2 TSS		Hold:19-MAR-95			
L4046-39	B0F674	12-MAR-95	15-MAR-95		30-MAR-95
TEMP 6 "SAF # 95-035"					
Location: RFG01-7B					
Water 1 S 6010 ICP METALS		Hold:08-SEP-95			
L4046-40	B0F674	12-MAR-95	15-MAR-95		30-MAR-95
TEMP 6 "SAF # 95-035"					
Location: RFG01-7B					
Water 1 S 160.2 TSS		Hold:19-MAR-95			
L4046-41	B0F672	12-MAR-95	15-MAR-95		30-MAR-95
TEMP 6 "SAF # 95-035"					
Location: RFG01-7B					
Water 1 S 6010 ICP METALS		Hold:08-SEP-95			
L4046-42	B0F672	12-MAR-95	15-MAR-95		30-MAR-95
TEMP 6 "SAF # 95-035"					
Location: RFG01-7B					
Water 1 S 160.2 TSS		Hold:19-MAR-95			
L4046-43	B0F675	12-MAR-95	15-MAR-95		30-MAR-95
TEMP 6 "SAF # 95-035"					
Location: RFG01-7B					
Water 1 S 6010 ICP METALS		Hold:08-SEP-95			
L4046-44	B0F675	12-MAR-95	15-MAR-95		30-MAR-95
TEMP 6 "SAF # 95-035"					
Location: RFG01-7B					
Water 1 S 160.2 TSS		Hold:19-MAR-95			
L4046-45	B0F670	12-MAR-95	15-MAR-95		30-MAR-95
TEMP 6 "SAF # 95-035"					
Location: RFG01-7B					
Water 1 S 6010 ICP METALS		Hold:08-SEP-95			

B-0014

C31551

9513388.1792

LOGIN CHAIN OF CUSTODY REPORT (ln01)
Mar 15 1995, 05:20 pm

WHC-SD-C018H-TRP, Rev 0 -06

Login Number: L4046
Account: 512 Westinghouse Hanford Co. * Richland, WA
Project: WESTINGHOUSE-HANFORD Westinghouse Hanford Project (Richland,WA

Laboratory Sample Number	Client Sample Number	Collect Date	Receive Date	PR	Due Date
Water 1 S 7470 MERCURY		Hold:25-MAR-95			
L4046-46	B0F670	12-MAR-95	15-MAR-95		30-MAR-9
TEMP 6 "SAF # 95-035"					
Location: RFG01-7B					
Water 1 S 160.2 TSS		Hold:19-MAR-95			
L4046-47	B0F673	12-MAR-95	15-MAR-95		30-MAR-9
TEMP 6 "SAF # 95-035"					
Location: RFG01-7B					
Water 1 S 6010 ICP METALS		Hold:08-SEP-95			
Water 1 S 7470 MERCURY		Hold:25-MAR-95			
L4046-48	B0F673	12-MAR-95	15-MAR-95		30-MAR-9
TEMP 6 "SAF # 95-035"					
Location: RFG01-7B					
Water 1 S 160.2 TSS		Hold:19-MAR-95			
L4046-49	B0F656	10-MAR-95	15-MAR-95		30-MAR-9
TEMP 6 "SAF # 95-035"					
Location: RFG01-7B					
Water 1 S 6010 ICP METALS		Hold:06-SEP-95			
L4046-50	B0F656	10-MAR-95	15-MAR-95		30-MAR-9
TEMP 6 "SAF # 95-035"					
Location: RFG01-7B					
Water 1 S 160.2 TSS		Hold:17-MAR-95			
L4046-51	B0F659	10-MAR-95	15-MAR-95		30-MAR-9
TEMP 6 "SAF # 95-035"					
Location: RFG01-7B					
Water 1 S 6010 ICP METALS		Hold:06-SEP-95			
L4046-52	B0F659	10-MAR-95	15-MAR-95		30-MAR-9
TEMP 6 "SAF # 95-035"					
Location: RFG01-7B					
Water 1 S 160.2 TSS		Hold:17-MAR-95			
L4046-53	B0F657	10-MAR-95	15-MAR-95		30-MAR-9
TEMP 6 "SAF # 95-035"					
Location: RFG01-7B					
Water 1 S 6010 ICP METALS		Hold:06-SEP-95			

B-0015

C31551

LOGIN CHAIN OF CUSTODY REPORT (ln01)
Mar 15 1995, 05:20 pm

WHC-SD-C018H-TRP-016, Rev 0 Login Number: L4046
Account: 512 Westinghouse Hanford Co. * Richland, WA
Project: WESTINGHOUSE-HANFORD Westinghouse Hanford Project (Richland,WA)

Laboratory Sample Number	Client Sample Number	Collect Date	Receive Date	PR	Due Date
L4046-54	B0F657	10-MAR-95	15-MAR-95		30-MAR-95
TEMP 6 "SAF # 95-035"					
Location: RFG01-7B					
Water 1 S 160.2 TSS		Hold:17-MAR-95			
L4046-55	B0F660	10-MAR-95	15-MAR-95		30-MAR-95
TEMP 6 "SAF # 95-035"					
Location: RFG01-7B					
Water 1 S 6010 ICP METALS		Hold:06-SEP-95			
L4046-56	B0F660	10-MAR-95	15-MAR-95		30-MAR-95
TEMP 6 "SAF # 95-035"					
Location: RFG01-7B					
Water 1 S 160.2 TSS		Hold:17-MAR-95			
L4046-57	B0F655	10-MAR-95	15-MAR-95		30-MAR-95
TEMP 6 "SAF # 95-035"					
Location: RFG01-7B					
Water 1 S 6010 ICP METALS		Hold:06-SEP-95			
Water 1 S 7470 MERCURY		Hold:23-MAR-95			
L4046-58	B0F655	10-MAR-95	15-MAR-95		30-MAR-95
TEMP 6 "SAF # 95-035"					
Location: RFG01-7B					
Water 1 S 160.2 TSS		Hold:17-MAR-95			
L4046-59	B0F655	10-MAR-95	15-MAR-95		30-MAR-95
TEMP 6 "SAF # 95-035"					
Location: RFG01-7B					
Water 1 S 160.1 TDS		Hold:17-MAR-95			
L4046-60	B0F655	10-MAR-95	15-MAR-95		30-MAR-95
TEMP 6 "SAF # 95-035"					
Location: RFG01-7B					
Water 1 S 300.0 CHLORIDE		Hold:07-APR-95			
Water 1 S 300.0 FLUORIDE		Hold:07-APR-95			
Water 1 S 300.0 NITRATE		Hold:12-MAR-95			
Water 1 S 300.0 NITRITE		Hold:12-MAR-95			
Water 1 S 300.0 PHOSPHATE		Hold:12-MAR-95			
Water 1 S 300.0 SULFATE		Hold:07-APR-95			
L4046-61	B0F655	10-MAR-95	15-MAR-95		30-MAR-95
TEMP 6 "SAF # 95-035"					
Location: RFG01-7B					

B- 0016

C31551

LOGIN CHAIN OF CUSTODY REPORT (ln01)
Mar 15 1995, 05:20 pm

016

WHC-SD-C018H-TRP, Rev 0

Login Number: L4046
Account: 512 Westinghouse Hanford Co. * Richland, WA
Project: WESTINGHOUSE-HANFORD Westinghouse Hanford Project (Richland,WA)

Laboratory Sample Number	Client Sample Number	Collect Date	Receive Date	PR	Due Date
Water 1 S 310.1 ALKALINITY		Hold:24-MAR-95			
L4046-62	B0F658	10-MAR-95	15-MAR-95		30-MAR-95
TEMP 6 "SAF # 95-035"					
Location: RFG01-7B					
Water 1 S 6010 ICP METALS		Hold:06-SEP-95			
Water 1 S 7470 MERCURY		Hold:23-MAR-95			
L4046-63	B0F658	10-MAR-95	15-MAR-95		30-MAR-95
TEMP 6 "SAF # 95-035"					
Location: RFG01-7B					
Water 1 S 160.2 TSS		Hold:17-MAR-95			
L4046-64	B0F662	11-MAR-95	15-MAR-95		30-MAR-95
TEMP 6 "SAF # 95-035"					
Location: RFG01-7C					
Water 1 S 6010 ICP METALS		Hold:07-SEP-95			
L4046-65	B0F662	11-MAR-95	15-MAR-95		30-MAR-95
TEMP 6 "SAF # 95-035"					
Location: RFG01-7C					
Water 1 S 160.2 TSS		Hold:18-MAR-95			
L4046-66	B0F665	11-MAR-95	15-MAR-95		30-MAR-95
TEMP 6 "SAF # 95-035"					
Location: RFG01-7C					
Water 1 S 6010 ICP METALS		Hold:07-SEP-95			
L4046-67	B0F665	11-MAR-95	15-MAR-95		30-MAR-95
TEMP 6 "SAF # 95-035"					
Location: RFG01-7C					
Water 1 S 160.2 TSS		Hold:18-MAR-95			
L4046-68	B0F663	11-MAR-95	15-MAR-95		30-MAR-95
TEMP 6 "SAF # 95-035"					
Location: RFG01-7C					
Water 1 S 6010 ICP METALS		Hold:07-SEP-95			
L4046-69	B0F663	11-MAR-95	15-MAR-95		30-MAR-95
TEMP 6 "SAF # 95-035"					
Location: RFG01-7C					
Water 1 S 160.2 TSS		Hold:18-MAR-95			

B-0017

031551

LOGIN CHAIN OF CUSTODY REPORT (ln01)
Mar 15 1995, 05:20 pm

-016

WHC-SD-C018H-TRP, Rev 0 Login Number: L4046
Account: 512 Westinghouse Hanford Co. * Richland, WA
Project: WESTINGHOUSE-HANFORD Westinghouse Hanford Project (Richland,WA)

Laboratory Sample Number	Client Sample Number	Collect Date	Receive Date	Due PR Date
L4046-70	B0F666	11-MAR-95	15-MAR-95	30-MAR-95
TEMP 6 "SAF # 95-035"				
Location: RFG01-7C				
Water 1 S 6010 ICP METALS		Hold:07-SEP-95		
L4046-71	B0F666	11-MAR-95	15-MAR-95	30-MAR-95
TEMP 6 "SAF # 95-035"				
Location: RFG01-7C				
Water 1 S 160.2 TSS		Hold:18-MAR-95		
L4046-72	B0F661	11-MAR-95	15-MAR-95	30-MAR-95
TEMP 6 "SAF # 95-035"				
Location: RFG01-7C				
Water 1 S 6010 ICP METALS		Hold:07-SEP-95		
Water 1 S 7470 MERCURY		Hold:24-MAR-95		
L4046-73	B0F661	11-MAR-95	15-MAR-95	30-MAR-95
TEMP 6 "SAF # 95-035"				
Location: RFG01-7C				
Water 1 S 160.2 TSS		Hold:18-MAR-95		
L4046-74	B0F664	11-MAR-95	15-MAR-95	30-MAR-95
TEMP 6 "SAF # 95-035"				
Location: RFG01-7C				
Water 1 S 6010 ICP METALS		Hold:07-SEP-95		
Water 1 S 7470 MERCURY		Hold:24-MAR-95		
L4046-75	B0F664	11-MAR-95	15-MAR-95	30-MAR-95
TEMP 6 "SAF # 95-035"				
Location: RFG01-7C				
Water 1 S 160.2 TSS		Hold:18-MAR-95		
L4046-76	REPORT TYPE	15-MAR-95	15-MAR-95	30-MAR-95
Location:				
Water 1 S EDD - DISK DEL.				
Water 1 S INORG TYPE 2 RPT +				

Signature: [illegible] B-0018

Date: 3-15-95

C31551

Westinghouse Hanford Company

CHAIN OF CUSTODY/SAMPLE ANALYSIS REQUEST

008995

Collector D.E. Richards | Company Contact L.L. Buckley/M.S. Hendrix | Telephone 373-2157/372-0550

SAF No. 95-035 | Project Designation LERF FILTRATION TEST | Sampling Locations LERF/200E/ DAY #3 L4046

Sample Number	*	Date Collected	Time	Number and Type of Containers	Analysis Required	Preservative
B0F671	W	3-12-95	0905	(1) 500ml aG	ICP Metals-TAL (6010).	HNO3 + 4 deg C
			0906	(1) 500ml Poly	TSS (EPA 160.2).	4 deg C
			0910	(1) 2 L Poly	Particle Size (Modified ASTM D422).	None
			0908	(1) 40ml aGs	Activity Scan (lab specific).	None
B0F674	W	3-12-95	0905	(1) 500ml aG	ICP Metals-TAL (6010).	HNO3 + 4 deg C
			0906	(1) 500ml Poly	TSS (EPA 160.2).	4 deg C
			0910	(1) 2 L Poly	Particle Size (Modified ASTM D422).	None
			0908	(1) 40ml aGs	Activity Scan (lab specific).	None
B0F672	W	3-12-95	0915	(1) 500ml aG	ICP Metals-TAL (6010).	HNO3 + 4 deg C
			0917	(1) 500ml Poly	TSS (EPA 160.2).	4 deg C
			0921	(1) 2 L Poly	Particle Size (Modified ASTM D422).	None
			0919	(1) 40ml aGs	Activity Scan (lab specific).	None
B0F675	W	3-12-95	0915	(1) 500ml aG	ICP Metals-TAL (6010).	HNO3 + 4 deg C
			0917	(1) 500ml Poly	TSS (EPA 160.2).	4 deg C
			0921	(1) 2 L Poly	Particle Size (Modified ASTM D422).	None
			0919	(1) 40ml aGs	Activity Scan (lab specific).	None

Chain of Possession Relinquished By (Sign and Print Names)	Date	Time	Received By
[illegible]	3/12/95	0950	

*Matrix

A = Air
DL = Drum Liquids
DS = Drum Solids
L = Liquid
O = Oil
S = Soil
SE = Sediment
SL = Sludge
SO = Solid
T = Tissue
W = Water
WI = Wipe
X = Other

Laboratory Section	Received By [illegible]	Title Sample Custodian	Date/Time 3-15-95 0445
Final Sample Disposition	Disposal Method:	Disposed by:	Date/Time:

95-WHC-CO1514 - T12 Rev 0

03155T

B-0010

Westinghouse Hanford Company

CHAIN OF CUSTODY/SAMPLE ANALYSIS REQUEST

008995

Collector D.E. Richards
Company Contact L.L. Buckley/ M.S. Hendrix
Telephone 372-2157/372-0550
SAF No. 95-035
Project Designation LERF FILTRAION TEST
Sampling Locations LERF/200E/DAY #3
Ice Chest No.
Bill of Lading/Airbill No.
Radioactive Shipment Record No. 000034
Method of Shipment Federal Express
Field Logbook No. WHC-N-205 #46
Shipped to Lockheed Analytical, Las Vegas Nevada.
SPECIAL INSTRUCTIONS Summary data deliverable.
Possible Sample Hazards/Remarks
Special Handling and/or Storage RCRA PROTOCOL / PRIORITY TURNAROUND

* PRIORITY TURNAROUND *

Sample Number	*	Date Collected	Time	Number and Type of Containers	Analysis Required	Preservative
B0F670	W	3-12-95	0852	(1) 500ml aG	ICP Metals-TAL to include: Ca,Cr,K,Na (6010). Hg (7470).	HNO3 + 4 deg C
			0854	(1) 500ml Poly	TSS (EPA 160.2).	4 deg C
			0858	(1) 2 L Poly	Particle Size (Modified ASTM D422).	None
			0856	(1) 40ml aGs	Activity Scan (lab specific).	None
B0F673	W	3-12-95	0852	(1) 500ml aG	ICP Metals-TAL to include: Ca,Cr,K,Na (6010). Hg (7470).	HNO3 + 4 deg C
			0854	(1) 500ml Poly	TSS (EPA 160.2)	4 deg C
			0858	(1) 2 L Poly	Particle Size (Modified ASTM D422).	None
			0856	(1) 40ml aGs	Activity Scan (lab specific).	None
					DEK 3-14-95	

Chain of Possession Relinquished By (Sign and Print Names)	Date	Time	Received By
[illegible]	3-14-95	0930	

*Matrix

A = Air
DL = Drum Liquids
DS = Drum Solids
L = Liquid
O = Oil
S = Soil
SE = Sediment
SL = Sludge
SO = Solid
T = Tissue
W = Water
WI = Wipe
X = Other

Laboratory Section	Received By [illegible]	Title Sample Custodian	Date/Time 3-15-95 0945
Final Sample Disposition	Disposal Method:	Disposed by:	Date/Time:

WHC-SD-CW184-TRP, Rev 0

C31551

B-020

Westinghouse Hanford Company

CHAIN OF CUSTODY/SAMPLE ANALYSIS REQUEST

008990

Collector D.E. Richards | Company Contact L.L. Buckley/M.S. Hendrix | Telephone 373-2157/372-0550

SAF No. 95-035 | Project Designation LERF FILTRATION TEST | Sampling Locations LERF/200E/ DAY #1

Sample Number	*	Date Collected	Time	Number and Type of Containers	Analysis Required	Preservative
B0F656	W	3-10-95	1000	(1) 500ml aG	ICP Metals-TAL (6010).	HNO3 + 4 deg C
			1005	(1) 500ml Poly	TSS (EPA 160.2).	4 deg C
			1003	(1) 2 L Poly	Particle Size (Modified ASTM D422).	None
			1006	(1) 40ml aGs	Activity Scan (lab specific).	None
B0F659	W	3-10-95	1000	(1) 500ml aG	ICP Metals-TAL (6010).	HNO3 + 4 deg C
			1005	(1) 500ml Poly	TSS (EPA 160.2).	4 deg C
			1003	(1) 2 L Poly	Particle Size (Modified ASTM D422).	None
			1006	(1) 40ml aGs	Activity Scan (lab specific).	None
B0F657	W	3-10-95	1010	(1) 500ml aG	ICP Metals-TAL (6010).	HNO3 + 4 deg C
			1017	(1) 500ml Poly	TSS (EPA 160.2).	4 deg C
			1015	(1) 2 L Poly	Particle Size (Modified ASTM D422).	None
			1020	(1) 40ml aGs	Activity Scan (lab specific).	None
B0F660	W	3-10-95	1010	(1) 500ml aG	ICP Metals-TAL (6010).	HNO3 + 4 deg C
			1017	(1) 500ml Poly	TSS (EPA 160.2).	4 deg C
			1015	(1) 2 L Poly	Particle Size (Modified ASTM D422).	None
			1020	(1) 40ml aGs	Activity Scan (lab specific).	None

Chain of Possession Relinquished By (Sign and Print Names)	Date	Time	Received By
DE Richards	3/14/95	0930	

*Matrix

A = Air
DL = Drum Liquids
DS = Drum Solids
L = Liquid
O = Oil
S = Soil
SE = Sediment
SL = Sludge
SO = Solid
T = Tissue
W = Water
WI = Wipe
X = Other

Laboratory Section	Received By	Title	Date/Time
Final Sample Disposition	Disposal Method:	Disposed by:	Date/Time:

95-KBM-HOOF SP-C018H-TR PROV/REV 0

0315151

B-0021

Westinghouse Hanford Company

CHAIN OF CUSTODY/SAMPLE ANALYSIS REQUEST

008990

Collector D.E. Richards
Company Contact L.L. Buckley/ M.S. Hendrix
Telephone 372-2157/372-0550
SAF No. 95-035
Project Designation LERF FILTRAION TEST
Sampling Locations LERF/200E/DAY #1
Ice Chest No.
Bill of Lading/Airbill No.
Radioactive Shipment Record No. 000034
Method of Shipment Federal Express
Field Logbook No. WHC-N-205 #46
Shipped to Lockheed Analytical, Las Vegas Nevada.
Possible Sample Hazards/Remarks RADIOACTIVE
Special Handling and/or Storage RCRA PROTOCOL / PRIORITY TURNAROUND

SPECIAL INSTRUCTIONS Summary data deliverable. NO2, NO3, and PO4 analysis (EPA 300.0) are being requested for information only. WHC recognizes the hold times will be missed.
* PRIORITY TURNAROUND *

Sample Number	*	Date Collected	Time	Number and Type of Containers	Analysis Required	Preservative
B0F655	W	3-10-95	0931	(1) 500ml aG	ICP Metals-TAL to include: Ca,Cr,K,Na (6010). Hg (7470).	HNO3 + 4 deg C
			0935	(1) 500ml Poly	TSS (EPA 160.2).	4 deg C
			0940	(1) 500ml Poly	TDS (EPA 160.1).	4 deg C
			0955	(1) 2 L Poly	Particle Size (Modified ASTM D422).	None
			0945	(1) 500ml Poly	Anions (EPA 300.0): F, Cl, SO4, and NO2, NO3, PO4.	4 deg C
			0948	(1) 250ml Poly	Alkalinity (EPA 310.1).	4 deg C
			0950	(1) 40ml aGs	Activity Scan (lab specific).	None
B0F658	W	3-10-95	0931	(1) 500ml aG	ICP Metals-TAL to include: Ca,Cr,K,Na (6010). Hg (7470).	HNO3 + 4 deg C
			0935	(1) 500ml Poly	TSS (EPA 160.2)	4 deg C
			0955	(1) 2 L Poly	Particle Size (Modified ASTM D422).	None
			0950	(1) 40ml aGs	Activity Scan (lab specific).	None

Chain of Possession Relinquished By (Sign and Print Names)	Date	Time	Received By
[illegible]	3/14/95	0930	

*Matrix
A = Air
DL = Drum Liquids
DS = Drum Solids
L = Liquid
O = Oil
S = Soil
SE = Sediment
SL = Sludge
SO = Solid
T = Tissue
W = Water
WI = Wipe
X = Other

Laboratory Section	Received By [illegible]	Title Sample Custodian	Date/Time 3-15-95 [illegible]
Final Sample Disposition	Disposal Method:	Disposed by:	Date/Time:

WHC-SD-CC187-TR rev 0

C3151

0022

Westinghouse Hanford Company

CHAIN OF CUSTODY/SAMPLE ANALYSIS REQUEST

008992

Collector D.E. Richards | Company Contact L.L. Buckley/M.S. Hendrix | Telephone 373-2157/372-0550

SAF No. 95-035 | Project Designation LERF FILTRATION TEST | Sampling Locations LERF/200E/ DAY #2

Sample Number	*	Date Collected	Time	Number and Type of Containers	Analysis Required	Preservative
B0F662	W	3-11-95	0906	(1) 500ml aG	ICP Metals-TAL (6010).	HNO3 + 4 deg C
			0908	(1) 500ml Poly	TSS (EPA 160.2).	4 deg C
			0910	(1) 2 L Poly	Particle Size (Modified ASTM D422).	None
			0909	(1) 40ml aGs	Activity Scan (lab specific).	None
B0F665	W	3-11-95	0906	(1) 500ml aG	ICP Metals-TAL (6010).	HNO3 + 4 deg C
			0908	(1) 500ml Poly	TSS (EPA 160.2).	4 deg C
			0910	(1) 2 L Poly	Particle Size (Modified ASTM D422).	None
			0906	(1) 40ml aGs	Activity Scan (lab specific).	None
B0F663	W	3-11-95	0916	(1) 500ml aG	ICP Metals-TAL (6010).	HNO3 + 4 deg C
			0917	(1) 500ml Poly	TSS (EPA 160.2).	4 deg C
			0922	(1) 2 L Poly	Particle Size (Modified ASTM D422).	None
			0919	(1) 40ml aGs	Activity Scan (lab specific).	None
B0F666	W	3-11-95	0916	(1) 500ml aG	ICP Metals-TAL (6010).	HNO3 + 4 deg C
			0917	(1) 500ml Poly	TSS (EPA 160.2).	4 deg C
			0922	(1) 2 L Poly	Particle Size (Modified ASTM D422).	None
			0919	(1) 40ml aGs	Activity Scan (lab specific).	None

Chain of Possession Relinquished By (Sign and Print Names)	Date	Time	Received By
[illegible]	3/14/95	0930	

*Matrix

A = Air
DL = Drum Liquids
DS = Drum Solids
L = Liquid
O = Oil
S = Soil
SE = Sediment
SL = Sludge
SO = Solid
T = Tissue
W = Water
WI = Wipe
X = Other

LABORATORY SECTION	Received By [illegible]	Title Sample Custodian	Date/Time 3-15-95 [illegible]
Final Sample Disposition	Disposal Method:	Disposed by:	Date/Time:

9513388.1946 HC-SD-CO18H-TR Page Rev 0

C3151

B-002

Westinghouse Hanford Company

CHAIN OF CUSTODY/SAMPLE ANALYSIS REQUEST

008992

Collector D.E. Richards
Company Contact L.L. Buckley/ M.S. Hendrix
Telephone 372-2157/372-0550
SAF No. 95-035
Project Designation LERF FILTRAION TEST
Sampling Locations LERF/200E/DAY #2
Ice Chest No.
Bill of Lading/Airbill No.
Radioactive Shipment Record No. 000034
Method of Shipment Federal Express
Field Logbook No. WHC-N-205 #46
Shipped to Lockheed Analytical, Las Vegas Nevada.
SPECIAL INSTRUCTIONS Summary data deliverable.
Possible Sample Hazards/Remarks
* PRIORITY TURNAROUND *
Special Handling and/or Storage RCRA PROTOCOL / PRIORITY TURNAROUND

Sample Number	*	Date Collected	Time	Number and Type of Containers	Analysis Required	Preservative
B0F661	W	3-11-95	0857	(1) 500ml aG	ICP Metals-TAL to include: Ca,Cr,K,Na (6010). Hg (7470).	HNO3 + 4 deg C
			0858	(1) 500ml Poly	TSS (EPA 160.2).	4 deg C
			0902	(1) 2 L Poly	Particle Size (Modified ASTM D422).	None
			0900	(1) 40ml aGs	Activity Scan (lab specific).	None
B0F664	W	3-11-95	0857	(1) 500ml aG	ICP Metals-TAL to include: Ca,Cr,K,Na (6010). Hg (7470).	HNO3 + 4 deg C
			0858	(1) 500ml Poly	TSS (EPA 160.2)	4 deg C
			0902	(1) 2 L Poly	Particle Size (Modified ASTM D422).	None
			0900	(1) 40ml aGs	Activity Scan (lab specific).	None

VEK 3/14/95

WHC-SP-0018H - TR 15492 Rev 0

Chain of Possession Relinquished By (Sign and Print Names)	Date	Time	Received By
[illegible]	3/14/95	0930	

*Matrix
A = Air
DL = Drum Liquids
DS = Drum Solids
L = Liquid
O = Oil
S = Soil
SE = Sediment
SL = Sludge
SO = Solid
T = Tissue
W = Water
WI = Wipe
X = Other

LABORATORY SECTION	Received By [illegible]	Title Sample Custodian	Date/Time 3-15-95 0845
Final Sample Disposition	Disposal Method:	Disposed by:	Date/Time:

C35151

9-
0024

9513388.1797 WHC-SD-C018H-TRP-016, Rev.0

Westinghouse
Hanford Company

Hanford Operations and Engineering Contractor for the US Department of Energy

"This package conforms to the conditions and limitations specified in 49 CFR 173.421 for radioactive material, excepted package-limited quantity of material, UN2910

B-002

C3155

POTENTIAL HAZARDS

HEALTH HAZARDS

Radiation presents minimal risk to lives of persons during transportation accidents.

Low-level radioactive material; very little radiation hazard to people.

Some radioactive materials cannot be detected by commonly available instruments.

Packages do not have RADIOACTIVE I, II, or III labels. Some may have EMPTY labels or be marked with the word "Radioactive".

FIRE OR EXPLOSION

Radioactivity does not change flammability or other properties of the materials.

Some of these materials may burn, but none of them ignites readily.

EMERGENCY ACTION

Priority response actions may be performed before taking radiation measurements.

Priorities are life saving, control of fire and other hazards, and first aid.

Keep unnecessary people away; isolate hazard area and deny entry.

Notify Radiation Authority of accident conditions.

Uninjured persons or equipment with suspected contamination should be detained or isolated; delay cleanup until instructions are received from Radiation Authority.

Positive pressure self-contained breathing apparatus (SCBA) and structural firefighters' protective clothing will provide adequate protection.

CALL Emergency Response Telephone Number on Shipping Paper first. If Shipping Paper not available or no answer, CALL CHEMTREC AT 1-800-424-9300.

FIRE

Do not move damaged containers; move undamaged containers out of fire zone.

Small Fires: Dry chemical, CO_2, water spray or regular foam.

Large Fires: Water spray, fog (flooding amounts).

SPILL OR LEAK

Do not touch damaged packages or spilled material.

Small Liquid Spills: Take up with sand, earth or other noncombustible absorbent material.

Cover powder spill with plastic sheet or tarp to minimize spreading.

FIRST AID

Use first aid treatment according to the nature of the injury.

If persons have contacted released material, use standard hazmat procedures for care of contaminated persons, for transport of the injured, and for notifications to authorities.

RADIOACTIVE MATERIAL, EXCEPTED PACKAGE - LIMITED QUANTITY OF MATERIAL, 7, UN-2910

AMPLE STATUS REPORT FOR N 5021. RAD SCREEN BOF670 TIME: 3/13/95 8:17
DISPATCHED: 3/ 8/95 8:36 SAMPLE HAS NOT BEEN SLURPED PAGE 1
RECEIVED: 3/13/95 8:12

WHC-SD-C018H-TRP-016, Rev 0

EXT.	DETER.	RESULTS OR STATUS	OUT OF RANGE?	GOOD ANS?	CHARGE CODE
****	********	**********	***	***	******
4271	TOT-ACT	7.90000E 03 pCi/G	N	Y	E35948
4271	TOT-ACT	8.07E+3 PCI/G H3			E35948

END OF REPORT

PRESS ANY KEY TO CONTINUE

ERIAL NUMBER STATUS REPORT 3/13/95 8:17

SERIAL NUMBER (PNNNN) ? N5022

AMPLE STATUS REPORT FOR N 5022. RAD SCREEN BOF671 TIME: 3/13/95 8:17
DISPATCHED: 3/ 8/95 8:36 SAMPLE HAS NOT BEEN SLURPED PAGE 1
RECEIVED: 3/13/95 8:12

EXT.	DETER.	RESULTS OR STATUS	OUT OF RANGE?	GOOD ANS?	CHARGE CODE
****	********	**********	***	***	******
4271	TOT-ACT	8.09000E 03 pCi/G	N	Y	E35948
4271	TOT-ACT	8.12E+3 PCI/G H3			E35948

END OF REPORT

PRESS ANY KEY TO CONTINUE

ERIAL NUMBER STATUS REPORT 3/13/95 8:17

SERIAL NUMBER (PNNNN) ? N5023

AMPLE STATUS REPORT FOR N 5023. RAD SCREEN BOF672 TIME: 3/13/95 8:17
DISPATCHED: 3/ 8/95 8:38 SAMPLE HAS NOT BEEN SLURPED PAGE 1

EXT.	DETER.	RESULTS OR STATUS	OUT OF RANGE?	GOOD ANS?	CHARGE CODE
****	********	**********	***	***	******
4271	TOT-ACT	7.84000E 03 pCi/G	N	Y	E35948
4271	TOT-ACT	8.01E+3 PCI/G, H3			E35948

END OF REPORT

PRESS ANY KEY TO CONTINUE

B-002:

03155

AMPLE STATUS REPORT FOR N 5021. RAD SCREEN ~~BOF670~~ TIME: 3/13/95 8:17
DISPATCHED: 3/ 8/95 8:36 SAMPLE HAS NOT BEEN SLURPED PAGE 1
RECEIVED: 3/13/95 8:12

WHC-SP-C0184-TRP-016, Rev 0

EXT.	DETER.	RESULTS OR STATUS	OUT OF RANGE?	GOOD ANS?	CHARGE CODE
****	********	**********	***	***	******
4271	TOT-ACT	7.90000E 03 pCi/G	N	Y	E35948
4271	TOT-ACT	8.07E+3 PCI/G H3			E35948

END OF REPORT

PRESS ANY KEY TO CONTINUE

ERIAL NUMBER STATUS REPORT 3/13/95 8:17

SERIAL NUMBER (PNNNN) ? N5022

BOF671 3-14-95

AMPLE STATUS REPORT FOR N 5022. RAD SCREEN ~~BOF671~~ TIME: 3/13/95 8:17
DISPATCHED: 3/ 8/95 8:36 SAMPLE HAS NOT BEEN SLURPED PAGE 1
RECEIVED: 3/13/95 8:12

EXT.	DETER.	RESULTS OR STATUS	OUT OF RANGE?	GOOD ANS?	CHARGE CODE
****	********	**********	***	***	******
4271	TOT-ACT	8.09000E 03 pCi/G	N	Y	E35948
4271	TOT-ACT	8.12E+3 PCI/G H3			E35948

END OF REPORT

PRESS ANY KEY TO CONTINUE

ERIAL NUMBER STATUS REPORT 3/13/95 8:17

SERIAL NUMBER (PNNNN) ? N5023

BOF675 3-14-95

AMPLE STATUS REPORT FOR N 5023. RAD SCREEN ~~BOF672~~ TIME: 3/13/95 8:1
DISPATCHED: 3/ 8/95 8:38 SAMPLE HAS NOT BEEN SLURPED PAGE 1

EXT.	DETER.	RESULTS OR STATUS	OUT OF RANGE?	GOOD ANS?	CHARGE CODE
****	********	**********	***	***	******
4271	TOT-ACT	7.84000E 03 pCi/G	N	Y	E35948
4271	TOT-ACT	8.01E+3 PCI/G, H3			E35948

END OF REPORT

PRESS ANY KEY TO CONTINUE

B-0028

C31551

9513388.1799

WHC-SD-C018H-TRP-016, Rev 0

AMPLE STATUS REPORT FOR N 5015. RAD SCREEN BOF655 TIME: 3/13/95 8:17
DISPATCHED: 3/ 8/95 8:30 SAMPLE HAS NOT BEEN SLURPED PAGE 1
RECEIVED: 3/12/95 13:52

EXT.	DETER.	RESULTS OR STATUS	OUT OF RANGE?	GOOD ANS?	CHARGE CODE
****	********	**********	***	***	******
4271	TOT-ACT	7.77E+3 PCI/G			E35948
4271	TOT-ACT	7.9E+3 PCI/G H3			E35948

END OF REPORT

PRESS ANY KEY TO CONTINUE

ERIAL NUMBER STATUS REPORT 3/13/95 8:17

SERIAL NUMBER (PNNNN) ? N5016

AMPLE STATUS REPORT FOR N 5016. RAD SCREEN BOF656 TIME: 3/13/95 8:17
DISPATCHED: 3/ 8/95 8:31 SAMPLE HAS NOT BEEN SLURPED PAGE 1
RECEIVED: 3/12/95 13:53

EXT.	DETER.	RESULTS OR STATUS	OUT OF RANGE?	GOOD ANS?	CHARGE CODE
****	********	**********	***	***	******
4271	TOT-ACT	7.74000E 03 pCi/G	N	Y	E35948
4271	TOT-ACT	7.93E+3 PCI/G H3			E35948

END OF REPORT

PRESS ANY KEY TO CONTINUE

ERIAL NUMBER STATUS REPORT 3/13/95 8:17

SERIAL NUMBER (PNNNN) ? N5017

AMPLE STATUS REPORT FOR N 5017. RAD SCREEN BOF657 TIME: 3/13/95 8:17
DISPATCHED: 3/ 8/95 8:32 SAMPLE HAS NOT BEEN SLURPED PAGE 1
RECEIVED: 3/12/95 13:53

EXT.	DETER.	RESULTS OR STATUS	OUT OF RANGE?	GOOD ANS?	CHARGE CODE
****	********	**********	***	***	******
4271	TOT-ACT	7.58000E 03 pCi/G	N	Y	E35948
4271	TOT-ACT	7.18E+3 PCI/G H3			E35948

END OF REPORT

B-0029

PRESS ANY KEY TO CONTINUE

C.31551

WHC-SD-C018H-TRP-016, Rev 0

BOF652 3/14/95

AMPLE STATUS REPORT FOR N 5015. RAD SCREEN ~~BOF655~~ TIME: 3/13/95 8:17
DISPATCHED: 3/ 8/95 8:30 SAMPLE HAS NOT BEEN SLURPED PAGE 1
RECEIVED: 3/12/95 13:52

EXT.	DETER.	RESULTS OR STATUS	OUT OF RANGE?	GOOD ANS?	CHARGE CODE
****	********	**********	***	***	******
4271	TOT-ACT	7.77E+3 PCI/G			E35948
4271	TOT-ACT	7.9E+3 PCI/G H3			E35948

END OF REPORT

PRESS ANY KEY TO CONTINUE

ERIAL NUMBER STATUS REPORT 3/13/95 8:17

SERIAL NUMBER (PNNNN) ? N5016

BOF657 3/14/95

AMPLE STATUS REPORT FOR N 5016. RAD SCREEN ~~BOF656~~ TIME: 3/13/95 8:17
DISPATCHED: 3/ 8/95 8:31 SAMPLE HAS NOT BEEN SLURPED PAGE 1
RECEIVED: 3/12/95 13:53

EXT.	DETER.	RESULTS OR STATUS	OUT OF RANGE?	GOOD ANS?	CHARGE CODE
****	********	**********	***	***	******
4271	TOT-ACT	7.74000E 03 pCi/G	N	Y	E35948
4271	TOT-ACT	7.93E+3 PCI/G H3			E35948

END OF REPORT

PRESS ANY KEY TO CONTINUE

ERIAL NUMBER STATUS REPORT 3/13/95 8:17

SERIAL NUMBER (PNNNN) ? N5017

BOF660 3/14/95

AMPLE STATUS REPORT FOR N 5017. RAD SCREEN ~~BOF657~~ TIME: 3/13/95 8:17
DISPATCHED: 3/ 8/95 8:32 SAMPLE HAS NOT BEEN SLURPED PAGE 1
RECEIVED: 3/12/95 13:53

EXT.	DETER.	RESULTS OR STATUS	OUT OF RANGE?	GOOD ANS?	CHARGE CODE
****	********	**********	***	***	******
4271	TOT-ACT	7.58000E 03 pCi/G	N	Y	E35948
4271	TOT-ACT	7.18E+3 PCI/G H3			E35948

END OF REPORT

B-0030

PRESS ANY KEY TO CONTINUE

031551

AMPLE STATUS REPORT FOR N 5018. RAD SCREEN BOF661 TIME: 3/13/95 8:1
DISPATCHED: 3/ 8/95 8:32 SAMPLE HAS NOT BEEN SLURPED PAGE 1
RECEIVED: 3/12/95 13:53

WHC-SD-C018H-TRP-016, Rev 0

EXT.	DETER.	RESULTS OR STATUS	OUT OF RANGE?	GOOD ANS?	CHARGE CODE
****	********	**********	***	***	******
4271	TOT-ACT	8.18000E 03 pCi/G	N	Y	E35948
4271	TOT-ACT	7.94E+3 PCI/G H3			E35948

END OF REPORT

PRESS ANY KEY TO CONTINUE

ERIAL NUMBER STATUS REPORT 3/13/95 8:17

SERIAL NUMBER (PNNNN) ? N5019

AMPLE STATUS REPORT FOR N 5019. RAD SCREEN BOF662 TIME: 3/13/95 8:1
DISPATCHED: 3/ 8/95 8:32 SAMPLE HAS NOT BEEN SLURPED PAGE 1
RECEIVED: 3/12/95 13:53

EXT.	DETER.	RESULTS OR STATUS	OUT OF RANGE?	GOOD ANS?	CHARGE CODE
****	********	**********	***	***	******
4271	TOT-ACT	8.21000E 03 pCi/G	N	Y	E35948
4271	TOT-ACT	8.90E+3 PCI/G H3			E35948

END OF REPORT

PRESS ANY KEY TO CONTINUE

ERIAL NUMBER STATUS REPORT 3/13/95 8:17

SERIAL NUMBER (PNNNN) ? N5020

AMPLE STATUS REPORT FOR N 5020. RAD SCREEN BOF663 TIME: 3/13/95 8:
DISPATCHED: 3/ 8/95 8:33 SAMPLE HAS NOT BEEN SLURPED PAGE
RECEIVED: 3/12/95 13:53

EXT.	DETER.	RESULTS OR STATUS	OUT OF RANGE?	GOOD ANS?	CHARG CODE
****	********	**********	***	***	*****
4271	TOT-ACT	8.12000E 03 pCi/G	N	Y	E3594
4271	TOT-ACT	7.95E+3 PCI/G H3			E3594

END OF REPORT

PRESS ANY KEY TO CONTINUE

B-0031

C31551

AMPLE STATUS REPORT FOR N 5018. RAD SCREEN ~~BOF661~~ TIME: 3/13/95 8:17
DISPATCHED: 3/ 8/95 8:32 SAMPLE HAS NOT BEEN SLURPED PAGE 1
RECEIVED: 3/12/95 13:53

WHC-SD-C018H-TRP-016, Rev 0

EXT.	DETER.	RESULTS OR STATUS	OUT OF RANGE?	GOOD ANS?	CHARGE CODE
****	********	**********	***	***	******
4271	TOT-ACT	8.18000E 03 pCi/G	N	Y	E35948
4271	TOT-ACT	7.94E+3 PCI/G H3			E35948

END OF REPORT

PRESS ANY KEY TO CONTINUE

ERIAL NUMBER STATUS REPORT 3/13/95 8:17

SERIAL NUMBER (PNNNN) ? N5019

AMPLE STATUS REPORT FOR N 5019. RAD SCREEN ~~BOF662~~ BOF665 TIME: 3/13/95 8:17
DISPATCHED: 3/ 8/95 8:32 SAMPLE HAS NOT BEEN SLURPED PAGE 1
RECEIVED: 3/12/95 13:53

EXT.	DETER.	RESULTS OR STATUS	OUT OF RANGE?	GOOD ANS?	CHARGE CODE
****	********	**********	***	***	******
4271	TOT-ACT	8.21000E 03 pCi/G	N	Y	E35948
4271	TOT-ACT	8.90E+3 PCI/G H3			E35948

END OF REPORT

PRESS ANY KEY TO CONTINUE

ERIAL NUMBER STATUS REPORT 3/13/95 8:17

SERIAL NUMBER (PNNNN) ? N5020

AMPLE STATUS REPORT FOR N 5020. RAD SCREEN ~~BOF663~~ BOF666 TIME: 3/13/95 8:1
DISPATCHED: 3/ 8/95 8:33 SAMPLE HAS NOT BEEN SLURPED PAGE 1
RECEIVED: 3/12/95 13:53

EXT.	DETER.	RESULTS OR STATUS	OUT OF RANGE?	GOOD ANS?	CHARGE CODE
****	********	**********	***	***	******
4271	TOT-ACT	8.12000E 03 pCi/G	N	Y	E35948
4271	TOT-ACT	7.95E+3 PCI/G H3			E35948

END OF REPORT

PRESS ANY KEY TO CONTINUE

B-0032

031551

9513388.1801

WHC-SOW-93-0003
Revision 4

WHC-SD-C018H-TRP-016, Rev 0

Figure 1

SAMPLE CHECK-IN LIST

(1 Per Shipping Container)

Date/Time Received 3-15-95 / 0845 Client Name Westinghouse

Project/Client # SAF # 95-035 Batch or Case # NA

Cooler ID (if noted on outside of cooler) SmL-485

1. Condition of shipping container? good
2. Custody Seals on cooler intact? Yes [X] No [ ]
3. Custody Seals dated and signed? Yes [X] No [ ]
4. Chain of Custody record is taped on inside of cooler lid? Yes [X] No [ ]
5. Vermiculite/packing material is: Wet [ ] Dry [X] _____
6. Each sample is in a plastic bag? Yes [X] No [ ] _____
7. Number of sample containers in cooler: 25
8. Samples have:
   - ____ tape
   - ____ hazard labels
   - X custody seals
   - ____ appropriate sample labels
9. Samples are:
   - X in good condition
   - ____ leaking
   - ____ broken
   - ____ have air bubbles
   - ____ other
10. Coolant Present? Yes [X] No [ ] Sample Temperature 6°C
11. The following paperwork should be accounted for (N/A if not applicable):

    Chain of Custody #(s) N/A

    Request for Analysis #(s) N/A

    Airbill # 2405544750 Carrier FED EX
12. Have any anomalies been identified above? Yes [ ] No [ ] NA
13. Memos have been initiated for all anomalies identified above? Yes [ ] NA

Printed Name/Signature Paul C. Davis / Paul C. Davis Date/Time 3-15-95/9:00am

B-0033

C315512

Figure 1

SAMPLE CHECK-IN LIST

(1 Per Shipping Container)

Date/Time Received 3-15-95 / 0845 Client Name Westinghouse

Project/Client # SA# 95-035 Batch or Case # _____

Cooler ID (if noted on outside of cooler) SML-479

1. Condition of shipping container? good
2. Custody Seals on cooler intact? Yes [X] No [ ]
3. Custody Seals dated and signed? Yes [X] No [ ]
4. Chain of Custody record is taped on inside of cooler lid? Yes [X] No [ ]
5. Vermiculite/packing material is: Wet [ ] Dry [X] _____
6. Each sample is in a plastic bag? Yes [X] No [ ] _____
7. Number of sample containers in cooler: 25
8. Samples have:
   - ____ tape
   - ____ hazard labels
   - X custody seals
   - ____ appropriate sample labels
9. Samples are:
   - X in good condition
   - ____ leaking
   - ____ broken
   - ____ have air bubbles
   - ____ other
10. Coolant Present? Yes [X] No [ ] Sample Temperature 6°C
11. The following paperwork should be accounted for (N/A if not applicable):

    Chain of Custody #(s) n/a

    Request for Analysis #(s) n/a

    Airbill # 240 5544 250 Carrier FedEx
12. Have any anomalies been identified above? Yes [ ] No [ ] n/a
13. Memos have been initiated for all anomalies identified above? Yes [ ] n/a

Printed Name/Signature Paul Curtis / Paul Curtis Date/Time 3-15-95 / 9:00

B-0034

C31551

WHC-SD-C018H-TRP-016, Rev 0

Figure 1

SAMPLE CHECK-IN LIST

(1 Per Shipping Container)

Date/Time Received 3-15-95 / 0845 Client Name Westinghouse

Project/Client # SRF # 95-035 Batch or Case # _____

Cooler ID (if noted on outside of cooler) SML-463

1. Condition of shipping container? good
2. Custody Seals on cooler intact? Yes [X] No [ ]
3. Custody Seals dated and signed? Yes [X] No [ ]
4. Chain of Custody record is taped on inside of cooler lid? Yes [X] No [ ]
5. Vermiculite/packing material is: Wet [ ] Dry [X] _____
6. Each sample is in a plastic bag? Yes [X] No [ ] _____
7. Number of sample containers in cooler: 25
8. Samples have:
   - ____ tape
   - ____ hazard labels
   - X custody seals
   - ____ appropriate sample labels
9. Samples are:
   - X in good condition
   - ____ leaking
   - ____ broken
   - ____ have air bubbles
   - ____ other
10. Coolant Present? Yes [X] No [ ] Sample Temperature 6°C
11. The following paperwork should be accounted for (N/A if not applicable):

    Chain of Custody #(s) NA

    Request for Analysis #(s) NA

    Airbill # 2405544750 Carrier FED EX
12. Have any anomalies been identified above? Yes [ ] No [ ] NA
13. Memos have been initiated for all anomalies identified above? Yes [ ] NA

Printed Name/Signature PAUL CURIS / Paul C Curis Date/Time 3-15-95 / 9:00 am

B-0035

C31551

Sample Login

Login Review Checklist

Lot Number L4046

The login review should be conducted by that person logging in the samples as well as a peer. Please use this checklist to ensure that such reviews occur in a uniform basis. Please sign and date below to verify that a login review has occurred. This checklist should be affixed to each login package prior to distribution.

For an effective login review, at a minimum, five reports from the login process are required. These are the chain of custody (or equivalent), the login chain of custody report, the sample summary report, the sample receiving checklist, and the login quotation. Before beginning a review, ensure that these five components are available. For jobs with single component samples, the sample summary report may be ommitted.

Sample Summary Report N/A	Yes	No
1. Are all sample IDs correct?	X	
2. Are all samples present?	X	
3. Are all matrices correct? (e.g., TCLP analyses should be on a TCLP leachate, field blanks should be water)	X	
4. Are all analyses on the chain of custody/login quotation included?	X	
5. Are analyses logged in for the correct container? (e.g., analyses requiring preservation logged in for a preserved container and vice versa)	X	
6. Are samples logged in according to laboratory batching procedures? (e.g., TCLP regular leaching and associated metals/semivolatile organics should be logged in on the same bottle)	X	

Login Chain of Custody Report		
1. Are the Collect, Receive , and Due dates correct for every sample?	X	
2. Have appropriate sample comments been included? (e.g., MS/MSD designation, comments from the client concerning method modifications)	X	

Sample Receiving Checklist		
1. Are any discrepancies between the chain of custody and the login noted? (e.g., client IDs different on chains of custody and bottle labels, samples not seen, samples lost from breakage)		N/A

Paul Davis 3-15-95 [illegible] 3-15-95

Primary review signature Date Secondary review signature Date

B-0036

03155

Lockheed Analytical Services
Sample Receiving Checklist

Client Name: Westinghouse-Hanford Job No. L4046 Cooler ID: N/A

COOLER CONDITION UPON RECEIPT

Temperature of cooler upon receipt: 6.0°C

temperature of temp. blank upon receipt:

	Yes	No	* Comments/Discrepancies
custody seals intact	X		
chain of custody present	X		
blue ice (or equiv.) present/frozen	X		
rad survey completed	X		

SAMPLE CONDITION UPON RECEIPT

	Yes	No	* Comments/Discrepancies
all bottles labeled	X		
samples intact	X		
proper container used for sample type	X		
sample volume sufficient for analysis	X		
proper pres. indicated on the COC	X		
VOA's contain headspace		N/A	
are samples bi-phasic (if so, indicate sample ID'S):		N/A	

MISCELLANEOUS ITEMS

	Yes	No	* Comments/Discrepancies
samples with short holding times	X		nitrate/nitrite
samples to subcontract	X		particle size

ADDITIONAL COMMENTS/DISCREPANCIES Client Recognizes missed Holding Times

Completed by / date: Paul C. Davis 3-15-95

Sent to the client (date/initials): ** Client's signature upon receipt:

*Notes: * = contact the appropriate CSR of any discrepancies immediately upon receipt*

*** = please review this information and return via facsimile to the appropriate CSR (702) 361-8146*

version 2.0 (11/11/94)

9513388.1803 - COISH-TRP-016, Rev 0

C3151

0037

Lockheed Analytical Services
Sample Receiving Checklist

Client Name: Westinghouse - Hanford Job No. L4046 Cooler ID: HH

COOLER CONDITION UPON RECEIPT			
Temperature of cooler upon receipt: 6°C			
temperature of temp. blank upon receipt: —			
	Yes	No	* Comments/Discrepancies
custody seals intact	X		
chain of custody present	X		
blue ice (or equiv.) present/frozen	X		
rad survey completed	X		

SAMPLE CONDITION UPON RECEIPT	Yes	No	* Comments/Discrepancies
all bottles labeled	X		
samples intact	X		
proper container used for sample type	X		
sample volume sufficient for analysis	X		
proper pres. indicated on the COC	X		
VOA's contain headspace		dif	
are samples bi-phasic (if so, indicate sample ID'S):		not	

MISCELLANEOUS ITEMS	Yes	No	* Comments/Discrepancies
samples with short holding times		X	
samples to subcontract	X		"particle size"

ADDITIONAL COMMENTS/DISCREPANCIES

Completed by / date: Paula Dawson 3-15-95

Sent to the client (date/initials): ** Client's signature upon receipt:

*Notes: * = contact the appropriate CSR of any discrepancies immediately upon receipt*

*** = please review this information and return via facsimile to the appropriate CSR (702) 361-8146*

version 2.0 (11/11/94)

WHC-SD-CO15H-TRP-016, Rev 0

C3155

5038 B-1

Lockheed Analytical Services
Sample Receiving Checklist

Client Name: Westinghouse - Hanford Job No. L4046 Cooler ID: N/A

COOLER CONDITION UPON RECEIPT

Temperature of cooler upon receipt: 6°C

temperature of temp. blank upon receipt:

	Yes	No	* Comments/Discrepancies
custody seals intact	X		
chain of custody present	X		
blue ice (or equiv.) present/frozen	X		
rad survey completed	X		

SAMPLE CONDITION UPON RECEIPT

	Yes	No	* Comments/Discrepancies
all bottles labeled	X		
samples intact	X		
proper container used for sample type	X		
sample volume sufficient for analysis	X		
proper pres. indicated on the COC	X		
VOA's contain headspace		NA	
are samples bi-phasic (if so, indicate sample ID'S):		NA	

MISCELLANEOUS ITEMS

	Yes	No	* Comments/Discrepancies
samples with short holding times		X	
samples to subcontract	X	particle size	

ADDITIONAL COMMENTS/DISCREPANCIES

Completed by / date: Paula Davis 3-15-95

Sent to the client (date/initials): ** Client's signature upon receipt:

*Notes: * = contact the appropriate CSR of any discrepancies immediately upon receipt*

*** = please review this information and return via facsimile to the appropriate CSR (702) 361-8146*

95133881 PDH-SD-CC/SH-TRP-016, Rev 0

C31357

5039

WHC-SD-C018H-TRP-016, Rev 0

Lockheed Analytical Laboratory
SAMPLE SUMMARY REPORT (su02)
Westinghouse Hanford Co. * Richland, WA

Client Sample Number	LAL Sample Number	SDG Number	Matrix	Method
B0F655	L4046-11		Water	SCREENING
	L4046-29		Water	NONE
	L4046-57		Water	6010 ICP METALS
	L4046-57		Water	7470 MERCURY
	L4046-58		Water	160.2 TSS
	L4046-59		Water	160.1 TDS
	L4046-60		Water	300.0 CHLORIDE
	L4046-60		Water	300.0 FLUORIDE
	L4046-60		Water	300.0 NITRATE
	L4046-60		Water	300.0 NITRITE
	L4046-60		Water	300.0 PHOSPHATE
	L4046-60		Water	300.0 SULFATE
	L4046-61		Water	310.1 ALKALINITY
B0F656	L4046-7		Water	SCREENING
	L4046-25		Water	NONE
	L4046-49		Water	6010 ICP METALS
	L4046-50		Water	160.2 TSS
B0F657	L4046-9		Water	SCREENING
	L4046-27		Water	NONE
	L4046-53		Water	6010 ICP METALS
	L4046-54		Water	160.2 TSS
B0F658	L4046-12		Water	SCREENING
	L4046-30		Water	NONE
	L4046-62		Water	6010 ICP METALS
	L4046-62		Water	7470 MERCURY
	L4046-63		Water	160.2 TSS
B0F659	L4046-8		Water	SCREENING
	L4046-26		Water	NONE
	L4046-51		Water	6010 ICP METALS
	L4046-52		Water	160.2 TSS
B0F660	L4046-10		Water	SCREENING
	L4046-28		Water	NONE
	L4046-55		Water	6010 ICP METALS
	L4046-56		Water	160.2 TSS
B0F661	L4046-17		Water	SCREENING
	L4046-35		Water	NONE
	L4046-72		Water	6010 ICP METALS
	L4046-72		Water	7470 MERCURY
	L4046-73		Water	160.2 TSS
B0F662	L4046-13		Water	SCREENING
	L4046-31		Water	NONE
	L4046-64		Water	6010 ICP METALS
	L4046-65		Water	160.2 TSS
B0F663	L4046-15		Water	SCREENING
	L4046-33		Water	NONE
	L4046-68		Water	6010 ICP METALS

B-0040
031512

9513388.1805 HNF-SD-C01814-TRP-016, Rev 0

Lockheed Analytical Laboratory
SAMPLE SUMMARY REPORT (su02)
Westinghouse Hanford Co. * Richland, WA

Client Sample Number	LAL Sample Number	SDG Number	Matrix	Method
	L4046-69		Water	160.2 TSS
B0F664	L4046-18		Water	SCREENING
	L4046-36		Water	NONE
	L4046-74		Water	6010 ICP METALS
	L4046-74		Water	7470 MERCURY
	L4046-75		Water	160.2 TSS
B0F665	L4046-14		Water	SCREENING
	L4046-32		Water	NONE
	L4046-66		Water	6010 ICP METALS
	L4046-67		Water	160.2 TSS
B0F666	L4046-16		Water	SCREENING
	L4046-34		Water	NONE
	L4046-70		Water	6010 ICP METALS
	L4046-71		Water	160.2 TSS
B0F670	L4046-5		Water	SCREENING
	L4046-23		Water	NONE
	L4046-45		Water	6010 ICP METALS
	L4046-45		Water	7470 MERCURY
	L4046-46		Water	160.2 TSS
B0F671	L4046-1		Water	SCREENING
	L4046-19		Water	NONE
	L4046-37		Water	6010 ICP METALS
	L4046-38		Water	160.2 TSS
B0F672	L4046-3		Water	SCREENING
	L4046-21		Water	NONE
	L4046-41		Water	6010 ICP METALS
	L4046-42		Water	160.2 TSS
B0F673	L4046-6		Water	SCREENING
	L4046-24		Water	NONE
	L4046-47		Water	6010 ICP METALS
	L4046-47		Water	7470 MERCURY
	L4046-48		Water	160.2 TSS
B0F674	L4046-2		Water	SCREENING
	L4046-20		Water	NONE
	L4046-39		Water	6010 ICP METALS
	L4046-40		Water	160.2 TSS
B0F675	L4046-4		Water	SCREENING
	L4046-22		Water	NONE
	L4046-43		Water	6010 ICP METALS
	L4046-44		Water	160.2 TSS
REPORT TYPE	L4046-76		Water	EDD - DISK DEL.
	L4046-76		Water	INORG TYPE 2 RPT

B-0041

031551

NON-METALS RESULTS

9513388.1806

LOCKHEED ANALYTICAL SERVICES

COMMON IONS AND ADDITIONAL ANALYTES

WHC-SD-C018H-TRP-016, Rev 0 Sample Results

Client Sample ID: B0F655	Date Collected: 10-MAR-95
Matrix: Water	Date Received: 15-MAR-95

Constituent	Units	Method	Result	Reporting Det Limit	Data Qualifier(s)	Date Analyzed	LAS Batch ID	LAS Sample ID
Total Dissolved Solids	mg/L	160.1	< 40	40		17-MAR-95	20481	L4046-59
Non Filterable Residue	mg/L	160.2	< 12	12		16-MAR-95	20482	L4046-58
Chloride	mg/L	300.0	0.61	0.02		16-MAR-95	20507	L4046-60
Fluoride	mg/L	300.0	< 0.1	0.1		20-MAR-95	20506	L4046-60
Nitrate-N	mg/L	300.0	< 0.02	0.02	H	16-MAR-95	20503	L4046-60
Nitrite-N	mg/L	300.0	< 0.01	0.01	H	16-MAR-95	20504	L4046-60
Ortho Phosphate	mg/L	300.0	< 0.1	0.1	H	20-MAR-95	20505	L4046-60
Sulfate	mg/L	300.0	0.68	0.1		16-MAR-95	20508	L4046-60
Alkalinity, total (as CaCO3)	mg/L	310.1	790	30		21-MAR-95	20509	L4046-61
Bicarbonate Alka as CaCO3	mg/L	310.1	440	30		21-MAR-95	20509	L4046-61
Carbonate Alka as CaCO3	mg/L	310.1	340	30		21-MAR-95	20509	L4046-61
Hydroxide Alkalinity (as CaCO3)	mg/L	310.1	< 30	30		21-MAR-95	20509	L4046-61

LOCKHEED ANALYTICAL SERVICES

COMMON IONS AND ADDITIONAL ANALYTES

WHC-SD-C018H-TRP-016, Rev 0

Sample Results

Client Sample ID: B0F656	Date Collected: 10-MAR-95
Matrix: Water	Date Received: 15-MAR-95

Constituent	Units	Method	Result	Reporting Det Limit	Data Qualifier(s)	Date Analyzed	LAS Batch ID	LAS Sample ID
Non Filterable Residue	mg/L	160.2	< 12	12		16-MAR-95	20482	L4046-50

B- 0044

9513388.1802

LOCKHEED ANALYTICAL SERVICES

COMMON IONS AND ADDITIONAL ANALYTES

Sample Results

WHC-SD-C018H-TRP-016, Rev 0

Client Sample ID: B0F657	Date Collected: 10-MAR-95
Matrix: Water	Date Received: 15-MAR-95

Constituent	Units	Method	Result	Reporting Det Limit	Data Qualifier(s)	Date Analyzed	LAS Batch ID	LAS Sample ID
Non Filterable Residue	mg/L	160.2	< 12	12		16-MAR-95	20482	L4046-54

B-0045

LOCKHEED ANALYTICAL SERVICES

COMMON IONS AND ADDITIONAL ANALYTES

WHC-SD-C018H-TRP-016, Rev 0

Sample Results

Client Sample ID: B0F658	Date Collected: 10-MAR-95
Matrix: Water	Date Received: 15-MAR-95

Constituent	Units	Method	Result	Reporting Det Limit	Data Qualifier(s)	Date Analyzed	LAS Batch ID	LAS Sample ID
Non Filterable Residue	mg/L	160.2	< 12	12		16-MAR-95	20482	L4046-63

B-0046

LOCKHEED ANALYTICAL SERVICES

COMMON IONS AND ADDITIONAL ANALYTES

WHC-SD-C018H-TRP-016, Rev 0

Sample Results

Client Sample ID: B0F659	Date Collected: 10-MAR-95
Matrix: Water	Date Received: 15-MAR-95

Constituent	Units	Method	Result	Reporting Det Limit	Data Qualifier(s)	Date Analyzed	LAS Batch ID	LAS Sample ID
Non Filterable Residue	mg/L	160.2	< 12	12		16-MAR-95	20482	L4046-52

LOCKHEED ANALYTICAL SERVICES

COMMON IONS AND ADDITIONAL ANALYTES

WHC-SD-C018H-TRP-016, Rev 0

Sample Results

Client Sample ID: B0F660	Date Collected: 10-MAR-95
Matrix: Water	Date Received: 15-MAR-95

Constituent	Units	Method	Result	Reporting Det Limit	Data Qualifier(s)	Date Analyzed	LAS Batch ID	LAS Sample ID
Non Filterable Residue	mg/L	160.2	< 12	12		16-MAR-95	20482	L4046-56

B-0048

9513388.1809

LOCKHEED ANALYTICAL SERVICES

COMMON IONS AND ADDITIONAL ANALYTES

WHC-SD-C018H-TRP-016, Rev 0

Sample Results

Client Sample ID: B0F661	Date Collected: 11-MAR-95
Matrix: Water	Date Received: 15-MAR-95

Constituent	Units	Method	Result	Reporting Det Limit	Data Qualifier(s)	Date Analyzed	LAS Batch ID	LAS Sample ID
Non Filterable Residue	mg/L	160.2	< 12	12		16-MAR-95	20482	L4046-73

B - 0049

LOCKHEED ANALYTICAL SERVICES

COMMON IONS AND ADDITIONAL ANALYTES

WHC-SD-C018H-TRP-016, Rev 0 Sample Results

Client Sample ID: B0F662	Date Collected: 11-MAR-95
Matrix: Water	Date Received: 15-MAR-95

Constituent	Units	Method	Result	Reporting Det|Limit	Data Qualifier(s)	Date Analyzed	LAS Batch|ID	LAS Sample|ID
Non Filterable Residue	mg/L	160.2	< 12	12		16-MAR-95	20482	L4046-65

B-0050

9513388.1810

LOCKHEED ANALYTICAL SERVICES

COMMON IONS AND ADDITIONAL ANALYTES

WHC-SD-C018H-TRP-016, Rev 0 Sample Results

Client Sample ID: B0F663	Date Collected: 11-MAR-95
Matrix: Water	Date Received: 15-MAR-95

Constituent	Units	Method	Result	Reporting Det Limit	Data Qualifier(s)	Date Analyzed	LAS Batch ID	LAS Sample ID
Non Filterable Residue	mg/L	160.2	< 12	12		16-MAR-95	20482	L4046-69

B- 0051

LOCKHEED ANALYTICAL SERVICES

COMMON IONS AND ADDITIONAL ANALYTES

WHC-SD-C018H-TRP-016, Rev 0 Sample Results

Client Sample ID: B0F664	Date Collected: 11-MAR-95
Matrix: Water	Date Received: 15-MAR-95

Constituent	Units	Method	Result	Reporting Det Limit	Data Qualifier(s)	Date Analyzed	LAS Batch ID	LAS Sample ID
Non Filterable Residue	mg/L	160.2	< 12	12		16-MAR-95	20482	L4046-75

B-0052

9513388.1811

LOCKHEED ANALYTICAL SERVICES

COMMON IONS AND ADDITIONAL ANALYTES

WHC-SD-C018H-TRP-016, Rev 0

Sample Results

Client Sample ID: B0F665	Date Collected: 11-MAR-95
Matrix: Water	Date Received: 15-MAR-95

Constituent	Units	Method	Result	Reporting Det Limit	Data Qualifier(s)	Date Analyzed	LAS Batch ID	LAS Sample ID
Non Filterable Residue	mg/L	160.2	< 12	12		16-MAR-95	20482	L4046-67

B - 0053

LOCKHEED ANALYTICAL SERVICES

COMMON IONS AND ADDITIONAL ANALYTES

Sample Results

WHC-SD-C018H-TRP-016, Rev 0

Client Sample ID: B0F666	Date Collected: 11-MAR-95
Matrix: Water	Date Received: 15-MAR-95

Constituent	Units	Method	Result	Reporting Det Limit	Data Qualifier(s)	Date Analyzed	LAS Batch ID	LAS Sample ID
Non Filterable Residue	mg/L	160.2	< 12	12		16-MAR-95	20482	L4046-71

B - 0054

9513388.1812

LOCKHEED ANALYTICAL SERVICES

COMMON IONS AND ADDITIONAL ANALYTES

WHC-SD-C018H-TRP-016, Rev 0 Sample Results

Client Sample ID: B0F670	Date Collected: 12-MAR-95
Matrix: Water	Date Received: 15-MAR-95

Constituent	Units	Method	Result	Reporting Det Limit	Data Qualifier(s)	Date Analyzed	LAS Batch ID	LAS Sample ID
Non Filterable Residue	mg/L	160.2	< 12	12		16-MAR-95	20482	L4046-46

B-0055

LOCKHEED ANALYTICAL SERVICES

COMMON IONS AND ADDITIONAL ANALYTES

WHC-SD-C018H-TRP-016, Rev 0 Sample Results

Client Sample ID: B0F671	Date Collected: 12-MAR-95
Matrix: Water	Date Received: 15-MAR-95

Constituent	Units	Method	Result	Reporting Det Limit	Data Qualifier(s)	Date Analyzed	LAS Batch ID	LAS Sample ID
Non Filterable Residue	mg/L	160.2	< 12	12		16-MAR-95	20482	L4046-38

B - 0056

9513388.1813

LOCKHEED ANALYTICAL SERVICES

COMMON IONS AND ADDITIONAL ANALYTES

WHC-SD-C018H-TRP-016, Rev 0

Sample Results

Client Sample ID: B0F672	Date Collected: 12-MAR-95
Matrix: Water	Date Received: 15-MAR-95

Constituent	Units	Method	Result	Reporting Det Limit	Data Qualifier(s)	Date Analyzed	LAS Batch ID	LAS Sample ID
Non Filterable Residue	mg/L	160.2	< 12	12		16-MAR-95	20482	L4046-42

B-0057

LOCKHEED ANALYTICAL SERVICES

COMMON IONS AND ADDITIONAL ANALYTES

WHC-SD-C018H-TRP-016, Rev 0 Sample Results

Client Sample ID: B0F673	Date Collected: 12-MAR-95
Matrix: Water	Date Received: 15-MAR-95

Constituent	Units	Method	Result	Reporting Det Limit	Data Qualifier(s)	Date Analyzed	LAS Batch ID	LAS Sample ID
Non Filterable Residue	mg/L	160.2	< 12	12		16-MAR-95	20482	L4046-48

B -0058

9513388.1814

LOCKHEED ANALYTICAL SERVICES

COMMON IONS AND ADDITIONAL ANALYTES

Sample Results

WHC-SD-C018H-TRP-016, Rev 0

Client Sample ID: B0F674	Date Collected: 12-MAR-95
Matrix: Water	Date Received: 15-MAR-95

Constituent	Units	Method	Result	Reporting Det Limit	Data Qualifier(s)	Date Analyzed	LAS Batch ID	LAS Sample ID
Non Filterable Residue	mg/L	160.2	< 12	12		16-MAR-95	20482	L4046-40

B-0059

LOCKHEED ANALYTICAL SERVICES

COMMON IONS AND ADDITIONAL ANALYTES

WHC-SD-C018H-TRP-016, Rev 0 Sample Results

Client Sample ID: B0F675	Date Collected: 12-MAR-95
Matrix: Water	Date Received: 15-MAR-95

Constituent	Units	Method	Result	Reporting Det Limit	Data Qualifier(s)	Date Analyzed	LAS Batch ID	LAS Sample ID
Non Filterable Residue	mg/L	160.2	< 12	12		16-MAR-95	20482	L4046-44

B-0060

LOCKHEED ANALYTICAL SERVICES

COMMON IONS AND ADDDITIONAL ANALYTES

WHC-SD-C018H-TRP-016, Rev 0

QC Data Summary For Reagent Blank Analysis

Constituent	Units	Reporting Detection Limit	LAS Batch ID	Date Analyzed	Reagent Blank Result	Data Qualifier
Total Dissolved Solids	mg/L	40	20481	03/17/95	< 40	
Non Filterable Residue	mg/L	12	20482	03/16/95	< 12	
Nitrate-N	mg/L	.02	20503	03/16/95	< .02	
Nitrite-N	mg/L	.01	20504	03/16/95	< .01	
Ortho Phosphate	mg/L	.1	20505	03/20/95	< .1	
Fluoride	mg/L	.1	20506	03/20/95	< .1	
Chloride	mg/L	.02	20507	03/16/95	< .02	
Sulfate	mg/L	.1	20508	03/16/95	< .1	

LOCKHEED ANALYTICAL SERVICES

COMMON IONS AND ADDDITIONAL ANALYTES

WHC-SD-C018H-TRP-016, Rev 0

QC Data Summary For Laboratory Control Sample Analysis

Constituent	Units	LAS Batch ID	Date Analyzed	LCS True Value	LCS Result	(%) Recovery
Total Dissolved Solids	mg/L	20481	03/17/95	1000	991.	99
Non Filterable Residue	mg/L	20482	03/16/95	500.	494.	99
Nitrate-N	mg/L	20503	03/16/95	12.5	13.7	110
Nitrite-N	mg/L	20504	03/16/95	15.0	15.2	101
Ortho Phosphate	mg/L	20505	03/20/95	1.00	0.983	98
Fluoride	mg/L	20506	03/20/95	1.00	0.965	97
Chloride	mg/L	20507	03/16/95	50.0	53.6	107
Sulfate	mg/L	20508	03/16/95	50.0	53.1	106
Alkalinity, total (as CaCO3)	mg/L	20509	03/21/95	633.	639.	101

9513388.1816

LOCKHEED ANALYTICAL SERVICES

COMMON IONS AND ADDITIONAL ANALYTES

WHC-SD-C018H-TRP-016, Rev 0

QC Data Summary For Matrix Spike Sample Analysis

Client Sample ID B0F655

Constituent	Units	LAS Batch ID	LAS Sample ID	Date Analyzed	Matrix Spike Result	Sample Result	Spike Added	(%) Recovery	Data Qualifier
Fluoride	mg/L	20506	L4046-60	03/20/95	1.33	0.000	1.50	89	
Ortho Phosphate	mg/L	20505	L4046-60	03/20/95	3.11	0.000	3.00	104	
Nitrate-N	mg/L	20503	L4046-60	03/16/95	10.4	0.0150	10.0	103	
Nitrite-N	mg/L	20504	L4046-60	03/16/95	13.3	0.000	12.0	111	
Chloride	mg/L	20507	L4046-60	03/16/95	40.7	0.611	40.0	100	
Sulfate	mg/L	20508	L4046-60	03/16/95	40.1	0.675	40.0	99	

LOCKHEED ANALYTICAL SERVICES

COMMON IONS AND ADDITIONAL ANALYTES

WHC-SD-C018H-TRP-016, Rev 0

QC Data Summary For Duplicate Sample Analysis

Client Sample ID B0F655

Constituent	Units	LAS Batch ID	LAS Sample ID	Date Analyzed	Sample Result	Duplicate Result	Relative Percent Difference	Data Qualifier
Non Filterable Residue	mg/L	20482	L4046-58	03/16/95	< 12	< 12	b	
Total Dissolved Solids	mg/L	20481	L4046-59	03/17/95	< 40	< 40	b	
Fluoride	mg/L	20506	L4046-60	03/20/95	< .1	< .1	b	
Ortho Phosphate	mg/L	20505	L4046-60	03/20/95	< .1	< .1	b	
Nitrate-N	mg/L	20503	L4046-60	03/16/95	< .02	< .02	b	
Nitrite-N	mg/L	20504	L4046-60	03/16/95	< .01	< .01	b	
Chloride	mg/L	20507	L4046-60	03/16/95	0.611	0.653	7	
Sulfate	mg/L	20508	L4046-60	03/16/95	0.675	0.669	1	
Hydroxide Alkalinity (as CaCO3) *	mg/L	20509	L4046-61	03/21/95	< 30	~~307 < 30~~	b	

GR 3/28/95

*

Cannot use 310.1 QC for

3/28/95

B-0064

Lockheed

CALIBRATION SUMMARY SHEETS

LOCKHEED ANALYTICAL LABORATORY
WATER QUALITY PARAMETERS
CALIBRATION SUMMARY

WHC-SD-C018H-TRP-016, Rev 0

SDG: NA	UNITS: mg/L	CONSTANT: NA
LAL BATCH: 315-WH	CALIBRATION DATE: 03-21-95	LINEAR COEFFICIENT: NA
METHOD: 310.1	CALIBRATION TIME: NA	QUADRATIC COEFFICIENT: NA
ANALYTE: AS NOTED	NUMBER OF STANDARDS: 1	CUBIC COEFFICIENT: NA
INSTRUMENT: 960 ORION	CALIBRATION TYPE: NA	COEFFICIENT OF DETERMINATION (r^2): NA

STANDARD DATA

STANDARD ID	MANUFACTURER	LOT #	TRUE VALUE	INSTRUMENT RESPONSE	CALCULATED CONCENTRATION
ANE	MALLINCKRODTT	7527KECR	0.025	NA	0.025 M

INITIAL CALIBRATION VERIFICATION DATA

SAMPLE ID	TRUE VALUE mg/L	FOUND mg/L	% RECOVERY
ICV	1249.875	1255.824	100.48

INITIAL CALIBRATION BLANK DATA

SAMPLE ID	INJECTION #	FOUND mg/L
ICB	NA	5.933 "B"

CONTINUING CALIBRATION VERIFICATION DATA

SAMPLE ID	INJECTION #	TRUE VALUE mg/L	FOUND VALUE mg/L	% RECOVERY
CCV	NA	1249.875	1268.498	101.49

CONTINUING CALIBRATION BLANK DATA

SAMPLE ID	INJECTION #	FOUND mg/L
CCB	NA	5.988 "B"

9513388.1818

LOCKHEED ANALYTICAL LABORATORY
WATER QUALITY PARAMETERS
QUALITY CONTROL DATA SUMMARY

WHC-SD-C018H-TRP-016, Rev 0

SDG: NA	ANALYTE: AS NOTED
LAL BATCH: 315-WH	UNITS: mg/L

LABORATORY CONTROL SAMPLES

LCS ID	ACCEPTANCE LIMITS (%R)	ANALYTE	TRUE VALUE mg/L	FOUND VALUE mg/L	% RECOVERY
LCS	80-120	TOTAL ALKALINITY	633.44	638.657	100.82

MATRIX SPIKE SAMPLES

CLIENT SAMPLE ID	ACCEPTANCE LIMITS (%R)	SPIKED SAMPLE RESULT	SAMPLE RESULT	SPIKE ADDED	% RECOVERY
NA					

LABORATORY DUPLICATE SAMPLES

SAMPLE ID	ACCEPTANCE LIMITS (%RPD)	ANALYTE	SAMPLE VALUE mg/L	DUPLICATE VALUE mg/L	% RPD
80F655	20	HCO3 ALK as CaCO3	439.734	443.957	0.96
"	20	CO3 ALK as CaCO3	344.602	306.527	11.70
"	20	OH ALK as CaCO3	4.168	3.673	12.63

FIELD BLANK SAMPLES

CLIENT SAMPLE ID	ANALYSIS RESULT
NA	

EXTRACTION BLANK

LAL SAMPLE ID	ANALYSIS RESULT
NA	

B-0067

LOCKHEED ANALYTICAL LABORATORY
CALIBRATION SUMMARY - LOW LEVEL
DETERMINATION OF FLUORIDE BY METHOD 300.0 (IC)

WHC-SD-C018H-TRP-016, Rev 0

	CALIB. DATE: 3/20/95	INTERCEPT: 8.014
LAL BATCH: 315-WH	CALIB. TIME: 9:29	LINEAR COEFF.: 6.930E-05
CALIB. CURVE: QUADRATIC	R SQUARED: 0.99999	QUADRATIC COEFF.: -5.882E-14

STANDARD DATA

MANUFACTURER: BAKER LOT NUMBER: D13143

STANDARD ID	CONCENTRATION	RESPONSE
AUTOCAL1	0 ug/L	0
AUTOCAL2	20 ug/L	207720
AUTOCAL3	20 ug/L	202120
AUTOCAL4	50 ug/L	572908
AUTOCAL5	100 ug/L	1166364
AUTOCAL6	1000 ug/L	14508432
AUTOCAL7	5000 ug/L	77070572

INITIAL CALIBRATION VERIFICATION STANDARD

SAMPLE ID	TRUE VALUE	FOUND	RECOVERY
ICVL	1000 ug/L	934 ug/L	93 %

INITIAL CALIBRATION BLANK

SAMPLE ID	FOUND	FLAG
ICB	0.0 ug/L	U

CONTINUING CALIBRATION VERIFICATION STANDARDS

SAMPLE ID	TRUE VALUE	FOUND	RECOVERY
CCVL	1000 ug/L	957 ug/L	96 %
CCVL	1000 ug/L	1003 ug/L	100 %

CONTINUING CALIBRATION BLANKS

SAMPLE ID	FOUND	FLAG
CCB	0.0 ug/L	U
CCB	0.0 ug/L	U

03/22/95

B - 0068

LOCKHEED ANALYTICAL LABORATORY
CALIBRATION SUMMARY - LOW LEVEL
DETERMINATION OF ORTHO-PHOSPHATE BY METHOD 300.0 (IC)

WHC-SD-C018H-TRP-016, Rev 0

LAL BATCH: 315-WH
CALIB. CURVE: QUADRATIC

CALIB. DATE: 3/20/95
CALIB. TIME: 9:29
R SQUARED: 0.99999

INTERCEPT: 16.550
LINEAR COEFF.: 1.350E-04
QUADRATIC COEFF.: -1.329E-13

STANDARD DATA

MANUFACTURER: ALDRICH LOT NUMBER: 133267X

STANDARD ID	CONCENTRATION	RESPONSE
AUTOCAL1	0 ug/L	0
AUTOCAL2	40 ug/L	223080
AUTOCAL3	40 ug/L	224886
AUTOCAL4	100 ug/L	579104
AUTOCAL5	200 ug/L	1158948
AUTOCAL6	2000 ug/L	15015922
AUTOCAL7	10000 ug/L	83363240

INITIAL CALIBRATION VERIFICATION STANDARD

SAMPLE ID	TRUE VALUE	FOUND	RECOVERY
ICVL	1000 ug/L	1006 ug/L	101 %

INITIAL CALIBRATION BLANK

SAMPLE ID	FOUND	FLAG
ICB	0.0 ug/L	U

CONTINUING CALIBRATION VERIFICATION STANDARDS

SAMPLE ID	TRUE VALUE	FOUND	RECOVERY
CCVL	2000 ug/L	2082 ug/L	104 %
CCVL	2000 ug/L	2095 ug/L	105 %

CONTINUING CALIBRATION BLANKS

SAMPLE ID	FOUND	FLAG
CCB	0.0 ug/L	U
CCB	0.0 ug/L	U

UPa
UPa others

LOCKHEED ANALYTICAL LABORATORY
QUALITY CONTROL DATA SUMMARY
LABORATORY CONTROL SAMPLE (LCS) - LOW CONCENTRATIONS

WHC-SD-C018H-TRP-016, Rev 0

LAL BATCH: 315-WH

LABORATORY CONTROL SAMPLE (LCS)

LCS ID	ANALYTE	TRUE	FOUND	RECOVERY
LCSL	FLUORIDE	1000 ug/L	965 ug/L	96 %
LCSL	ORTHO-PHOSPHATE	1000 ug/L	983 ug/L	98 %

LABORATORY CONTROL SAMPLE DUPLICATE (LCS-DUP)

LCS ID	ANALYTE	TRUE	FOUND	RECOVERY
LCSLDUP	FLUORIDE	1000 ug/L	959 ug/L	96 %
LCSLDUP	ORTHO-PHOSPHATE	1000 ug/L	972 ug/L	97 %

LABORATORY CONTROL SAMPLE-LABORATORY CONTROL SAMPLE DUPLICATE COMPARISON

ANALYTE	LCS	LCS-DUP	RPD	FLAG
FLUORIDE	965 ug/L	959 ug/L	1 %	
ORTHO-PHOSPHATE	983 ug/L	972 ug/L	1 %	

LOCKHEED ANALYTICAL LABORATORY
QUALITY CONTROL DATA SUMMARY
METHOD BLANK

LAL BATCH: 315-WH

LABORATORY CONTROL SAMPLE (LCS)

LCS ID	ANALYTE	FOUND	FLAG
FILTERED BLANK	FLUORIDE	0.0 ug/L	U
FILTERED BLANK	ORTHO-PHOSPHATE	0.0 ug/L	U

LOCKHEED ANALYTICAL LABORATORY
QUALITY CONTROL DATA SUMMARY
SPIKE AND SPIKE DUPLICATE ANALYSES

WHC-SD-C018H-TRP-016, Rev 0

LAL BATCH: 315-WH

MATRIX SPIKE SAMPLES

LCS ID	ANALYTE	SAMPLE RESULT	SPIKE ADDED	SPIKED SAMPLE	SPIKE RECOVERY	FLAG
L4046-60	FLUORIDE	B	1.50 mg/L	1.33 mg/L	89 %	
L4046-60	ORTHO-PHOSPH	U	3.00 mg/L	3.11 mg/L	104 %	

MATRIX SPIKE DUPLICATE SAMPLES

LCS ID	ANALYTE	SAMPLE RESULT	SPIKE ADDED	SPIKED SAMPLE	SPIKE RECOVERY	FLAG

(No matrix spike duplicate)

MATRIX SPIKE - MATRIX SPIKE DUPLICATE COMPARISON

LCS ID	ANALYTE	MATRIX SPIKE	SPIKE DUPLICATE	RPD	FLAG

(No matrix spike duplicate)

LOCKHEED ANALYTICAL LABORATORY
QUALITY CONTROL DATA SUMMARY
DUPLICATE SAMPLE ANALYSES

WHC-SD-C018H-TRP-016, Rev 0

LAL BATCH: 315-WH

DUPLICATE SAMPLES

LCS ID	ANALYTE	SAMPLE RESULT	DUPLICATE SAMPLE	RPD	FLAG
L4046-60	FLUORIDE	B	B		b
L4046-60	ORTHO-PHOSPHAT	U	U		b

LOCKHEED ANALYTICAL LABORATORY
CALIBRATION SUMMARY - LOW LEVEL
DETERMINATION OF CHLORIDE BY METHOD 300.0 (IC)

WHC-SD-C018H-TRP-016, Rev 0

	CALIB. DATE: 3/12/95	INTERCEPT: 4.610
LAL BATCH: 315-wh	CALIB. TIME: 16:56	LINEAR COEFF.: 1.086E-04
CALIB. CURVE: QUADRATIC	R SQUARED: 1.00000	QUADRATIC COEFF.: -7.012E-14

STANDARD DATA

MANUFACTURER: MALLINCKRODT LOT NUMBER: 6858KDPG

STANDARD ID	CONCENTRATION	RESPONSE
AUTOCAL1	0 ug/L	0
AUTOCAL2	20 ug/L	105582
AUTOCAL3	20 ug/L	94628
AUTOCAL4	50 ug/L	462360
AUTOCAL5	100 ug/L	877416
AUTOCAL6	1000 ug/L	9223380
AUTOCAL7	5000 ug/L	47474875

INITIAL CALIBRATION VERIFICATION STANDARD

SAMPLE ID	TRUE VALUE	FOUND	RECOVERY
ICVL	1000 ug/L	958 ug/L	96 %

INITIAL CALIBRATION BLANK

SAMPLE ID	FOUND	FLAG
ICB	0.0 ug/L	U

CONTINUING CALIBRATION VERIFICATION STANDARDS

SAMPLE ID	TRUE VALUE	FOUND	RECOVERY
CCVL	1000 ug/L	916 ug/L	92 %
CCVL	1000 ug/L	989 ug/L	99 %

CONTINUING CALIBRATION BLANKS

SAMPLE ID	FOUND	FLAG
CCB	0.0 ug/L	U
CCB	6.9 ug/L	U

3/17/95

B-0074

LOCKHEED ANALYTICAL LABORATORY
CALIBRATION SUMMARY - LOW LEVEL
DETERMINATION OF NITRITE-N BY METHOD 300.0 (IC)

WHC-SD-C018H-TRP-016, Rev 0

	CALIB. DATE: 3/12/95	INTERCEPT: 1.326
LAL BATCH: 315-wh	CALIB. TIME: 16:56	LINEAR COEFF.: 4.503E-05
CALIB. CURVE: QUADRATIC	R SQUARED: 1.00000	QUADRATIC COEFF.: 7.111E-14

STANDARD DATA

MANUFACTURER: EMSCIENCE LOT NUMBER: 3006101

STANDARD ID	CONCENTRATION	RESPONSE
AUTOCAL1	0 ug/L	0
AUTOCAL2	6 ug/L	118428
AUTOCAL3	6 ug/L	112864
AUTOCAL4	15 ug/L	296488
AUTOCAL5	30 ug/L	584618
AUTOCAL6	300 ug/L	6569613
AUTOCAL7	1500 ug/L	31692681

INITIAL CALIBRATION VERIFICATION STANDARD

SAMPLE ID	TRUE VALUE	FOUND	RECOVERY
ICVL	300 ug/L	275 ug/L	92 %

INITIAL CALIBRATION BLANK

SAMPLE ID	FOUND	FLAG
ICB	0.0 ug/L	U

CONTINUING CALIBRATION VERIFICATION STANDARDS

SAMPLE ID	TRUE VALUE	FOUND	RECOVERY
CCVL	300 ug/L	280 ug/L	93 %
CCVL	300 ug/L	280 ug/L	93 %

CONTINUING CALIBRATION BLANKS

SAMPLE ID	FOUND	FLAG
CCB	0.0 ug/L	U
CCB	0.0 ug/L	U

04/17/95

LOCKHEED ANALYTICAL LABORATORY
CALIBRATION SUMMARY - LOW LEVEL
DETERMINATION OF NITRATE-N BY METHOD 300.0 (IC)

WHC-SD-C018H-TRP-016, Rev 0

	CALIB. DATE: 3/12/95	INTERCEPT: 0.453
LAL BATCH: 315-wh	CALIB. TIME: 16:56	LINEAR COEFF.: 4.460E-05
CALIB. CURVE: QUADRATIC	R SQUARED: 1.00000	QUADRATIC COEFF.: -2.001E-14

STANDARD DATA

MANUFACTURER: BAKER LOT NUMBER: D10718

STANDARD ID	CONCENTRATION	RESPONSE
AUTOCAL1	0 ug/L	0
AUTOCAL2	5 ug/L	109368
AUTOCAL3	5 ug/L	95334
AUTOCAL4	12.5 ug/L	278732
AUTOCAL5	25 ug/L	529212
AUTOCAL6	250 ug/L	5611642
AUTOCAL7	1250 ug/L	28380058

INITIAL CALIBRATION VERIFICATION STANDARD

SAMPLE ID	TRUE VALUE	FOUND	RECOVERY
ICVL	250 ug/L	258 ug/L	103 %

INITIAL CALIBRATION BLANK

SAMPLE ID	FOUND	FLAG
ICB	0.0 ug/L	U

CONTINUING CALIBRATION VERIFICATION STANDARDS

SAMPLE ID	TRUE VALUE	FOUND	RECOVERY
CCVL	250 ug/L	252 ug/L	101 %
CCVL	250 ug/L	281 ug/L	112 %

CONTINUING CALIBRATION BLANKS

SAMPLE ID	FOUND	FLAG
CCB	0.0 ug/L	U
CCB	0.0 ug/L	U

LOCKHEED ANALYTICAL LABORATORY
CALIBRATION SUMMARY - LOW LEVEL
DETERMINATION OF SULFATE BY METHOD 300.0 (IC)

WHC-SD-C018H-TRP-016, Rev 0

	CALIB. DATE: 3/12/95	INTERCEPT: -7.057
LAL BATCH: 315-wh	CALIB. TIME: 16:56	LINEAR COEFF.: 1.392E-04
CALIB. CURVE: QUADRATIC	R SQUARED: 1.00000	QUADRATIC COEFF.: -5.529E-15

STANDARD DATA

MANUFACTURER: EMSCIENCE LOT NUMBER: 8242

STANDARD ID	CONCENTRATION	RESPONSE
AUTOCAL1	0 ug/L	0
AUTOCAL2	40 ug/L	317364
AUTOCAL3	40 ug/L	317936
AUTOCAL4	100 ug/L	822238
AUTOCAL5	200 ug/L	1535304
AUTOCAL6	2000 ug/L	14422390
AUTOCAL7	10000 ug/L	72118552

INITIAL CALIBRATION VERIFICATION STANDARD

SAMPLE ID	TRUE VALUE	FOUND	RECOVERY
ICVL	1000 ug/L	992 ug/L	99 %

INITIAL CALIBRATION BLANK

SAMPLE ID	FOUND	FLAG
ICB	0.0 ug/L	U

CONTINUING CALIBRATION VERIFICATION STANDARDS

SAMPLE ID	TRUE VALUE	FOUND	RECOVERY
CCVL	2000 ug/L	1983 ug/L	99 %
CCVL	2000 ug/L	1989 ug/L	99 %

CONTINUING CALIBRATION BLANKS

SAMPLE ID	FOUND	FLAG
CCB	0.0 ug/L	U
CCB	0.0 ug/L	U

LOCKHEED ANALYTICAL LABORATORY
CALIBRATION SUMMARY - HIGH LEVEL
DETERMINATION OF CHLORIDE BY METHOD 300.0 (IC)

WHC-SD-C018H-TRP-016, Rev 0

	CALIB. DATE: 3/12/95	INTERCEPT: 0.597
LAL BATCH: 315-wh	CALIB. TIME: 16:56	LINEAR COEFF.: 8.392E-08
CALIB. CURVE: QUADRATIC	R SQUARED: 0.99992	QUADRATIC COEFF.: -5.976E-18

STANDARD DATA

MANUFACTURER: MALLINCKRODT LOT NUMBER: 6858KDPG

STANDARD ID	CONCENTRATION	RESPONSE
AUTOCAL1	5 mg/L	47302038
AUTOCAL2	10 mg/L	111246953
AUTOCAL3	25 mg/L	308607601
AUTOCAL4	75 mg/L	945450405
AUTOCAL5	150 mg/L	2092970202

INITIAL CALIBRATION VERIFICATION STANDARD

SAMPLE ID	TRUE VALUE	FOUND	RECOVERY
ICVH	50 mg/L	52.63 mg/L	105 %

INITIAL CALIBRATION BLANK (See low-level calibration summary sheet)

CONTINUING CALIBRATION VERIFICATION STANDARDS

SAMPLE ID	TRUE VALUE	FOUND	RECOVERY
CCVH	50 mg/L	49.67 mg/L	99 %
CCVH	50 mg/L	50.77 mg/L	102 %

CONTINUING CALIBRATION BLANKS (See low-level calibration summary sheet)

LOCKHEED ANALYTICAL LABORATORY
CALIBRATION SUMMARY - HIGH LEVEL
DETERMINATION OF NITRITE-N BY METHOD 300.0 (IC)

WHC-SD-C018H-TRP-016, Rev 0

	CALIB. DATE: 3/12/95	INTERCEPT: -0.059
LAL BATCH: 315-wh	CALIB. TIME: 16:56	LINEAR COEFF.: 4.289E-08
CALIB. CURVE: QUADRATIC	R SQUARED: 0.99983	QUADRATIC COEFF.: -6.262E-19

STANDARD DATA

MANUFACTURER: EMSCIENCE LOT NUMBER: 3006101

STANDARD ID	CONCENTRATION	RESPONSE
AUTOCAL1	1.5 mg/L	31443779
AUTOCAL2	3 mg/L	71067325
AUTOCAL3	7.5 mg/L	185618006
AUTOCAL4	22.5 mg/L	525514339
AUTOCAL5	45 mg/L	1067983267

INITIAL CALIBRATION VERIFICATION STANDARD

SAMPLE ID	TRUE VALUE	FOUND	RECOVERY
ICVH	15 mg/L	14.98 mg/L	100 %

INITIAL CALIBRATION BLANK (See low-level calibration summary sheet)

CONTINUING CALIBRATION VERIFICATION STANDARDS

SAMPLE ID	TRUE VALUE	FOUND	RECOVERY
CCVH	15 mg/L	15.05 mg/L	100 %
CCVH	15 mg/L	15.19 mg/L	101 %

CONTINUING CALIBRATION BLANKS (See low-level calibration summary sheet)

LOCKHEED ANALYTICAL LABORATORY
CALIBRATION SUMMARY - HIGH LEVEL
DETERMINATION OF NITRATE-N BY METHOD 300.0 (IC)

WHC-SD-C018H-TRP-016, Rev 0

	CALIB. DATE: 3/12/95	INTERCEPT: 0.116
LAL BATCH: 315-wh	CALIB. TIME: 16:56	LINEAR COEFF.: 4.019E-08
CALIB. CURVE: QUADRATIC	R SQUARED: 0.99999	QUADRATIC COEFF.: -7.014E-18

STANDARD DATA

MANUFACTURER: BAKER LOT NUMBER: D10718

STANDARD ID	CONCENTRATION	RESPONSE
AUTOCAL1	1.25 mg/L	28096650
AUTOCAL2	2.5 mg/L	58712130
AUTOCAL3	6.25 mg/L	159184012
AUTOCAL4	18.75 mg/L	507878892
AUTOCAL5	37.5 mg/L	1168519660

INITIAL CALIBRATION VERIFICATION STANDARD

SAMPLE ID	TRUE VALUE	FOUND	RECOVERY
ICVH	12.5 mg/L	13.48 mg/L	108 %

INITIAL CALIBRATION BLANK (See low-level calibration summary sheet)

CONTINUING CALIBRATION VERIFICATION STANDARDS

SAMPLE ID	TRUE VALUE	FOUND	RECOVERY
CCVH	12.5 mg/L	12.96 mg/L	104 %
CCVH	12.5 mg/L	13.05 mg/L	104 %

CONTINUING CALIBRATION BLANKS (See low-level calibration summary sheet)

LOCKHEED ANALYTICAL LABORATORY
CALIBRATION SUMMARY - HIGH LEVEL
DETERMINATION OF SULFATE BY METHOD 300.0 (IC)

WHC-SD-C018H-TRP-016, Rev 0

	CALIB. DATE: 3/12/95	INTERCEPT: 1.305
LAL BATCH: 315-wh	CALIB. TIME: 16:56	LINEAR COEFF.: 1.213E-07
CALIB. CURVE: QUADRATIC	R SQUARED: 0.99998	QUADRATIC COEFF.: -6.393E-18

STANDARD DATA

MANUFACTURER: EMSCIENCE LOT NUMBER: 8242

STANDARD ID	CONCENTRATION	RESPONSE
AUTOCAL1	10 mg/L	71509332
AUTOCAL2	20 mg/L	150810784
AUTOCAL3	50 mg/L	417534278
AUTOCAL4	150 mg/L	1313759884
AUTOCAL5	300 mg/L	2907261539

INITIAL CALIBRATION VERIFICATION STANDARD

SAMPLE ID	TRUE VALUE	FOUND	RECOVERY
ICVH	50 mg/L	51.21 mg/L	102 %

INITIAL CALIBRATION BLANK (See low-level calibration summary sheet)

CONTINUING CALIBRATION VERIFICATION STANDARDS

SAMPLE ID	TRUE VALUE	FOUND	RECOVERY
CCVH	100 mg/L	103.97 mg/L	104 %
CCVH	100 mg/L	104.41 mg/L	104 %

CONTINUING CALIBRATION BLANKS (See low-level calibration summary sheet)

LOCKHEED ANALYTICAL LABORATORY
QUALITY CONTROL DATA SUMMARY WHC-SD-C018H-TRP-016, Rev 0
LABORATORY CONTROL SAMPLE (LCS) - LOW CONCENTRATIONS

LAL BATCH: 315-wh

LABORATORY CONTROL SAMPLE (LCS)

LCS ID	ANALYTE	TRUE	FOUND	RECOVERY
LCSL	CHLORIDE	1000 ug/L	1086 ug/L	109 %
LCSL	NITRITE-N	300 ug/L	312 ug/L	104 %
LCSL	NITRATE-N	250 ug/L	277 ug/L	111 %
LCSL	SULFATE	1000 ug/L	1074 ug/L	107 %

LABORATORY CONTROL SAMPLE DUPLICATE (LCS-DUP)

LCS ID	ANALYTE	TRUE	FOUND	RECOVERY
LCSLDUP	CHLORIDE	1000 ug/L	1031 ug/L	103 %
LCSLDUP	NITRITE-N	300 ug/L	312 ug/L	104 %
LCSLDUP	NITRATE-N	250 ug/L	280 ug/L	112 %
LCSLDUP	SULFATE	1000 ug/L	1078 ug/L	108 %

LABORATORY CONTROL SAMPLE-LABORATORY CONTROL SAMPLE DUPLICATE COMPARISON

ANALYTE	LCS	LCS-DUP	RPD	FLAG
CHLORIDE	1086 ug/L	1031 ug/L	5 %	
NITRITE-N	312 ug/L	312 ug/L	0 %	
NITRATE-N	277 ug/L	280 ug/L	1 %	
SULFATE	1074 ug/L	1078 ug/L	0 %	

LOCKHEED ANALYTICAL LABORATORY
QUALITY CONTROL DATA SUMMARY
LABORATORY CONTROL SAMPLE (LCS) - HIGH CONCENTRATIONS

WHC-SD-C018H-TRP-016, Rev 0

LAL BATCH: 315-wh

LABORATORY CONTROL SAMPLE (LCS)

LCS ID	ANALYTE	TRUE	FOUND	RECOVERY
LCSH	CHLORIDE	50.00 mg/L	53.59 mg/L	107 %
LCSH	NITRITE-N	15.00 mg/L	15.16 mg/L	101 %
LCSH	NITRATE-N	12.50 mg/L	13.73 mg/L	110 %
LCSH	SULFATE	50.00 mg/L	53.11 mg/L	106 %

LABORATORY CONTROL SAMPLE DUPLICATE (LCS-DUP)

LCS ID	ANALYTE	TRUE	FOUND	RECOVERY
LCSHDUP	CHLORIDE	50.00 mg/L	52.09 mg/L	104 %
LCSHDUP	NITRITE-N	15.00 mg/L	15.24 mg/L	102 %
LCSHDUP	NITRATE-N	12.50 mg/L	13.54 mg/L	108 %
LCSHDUP	SULFATE	50.00 mg/L	54.56 mg/L	109 %

LABORATORY CONTROL SAMPLE-LABORATORY CONTROL SAMPLE DUPLICATE COMPARISON

ANALYTE	LCS	LCS-DUP	RPD	FLAG
CHLORIDE	53.59 mg/L	52.09 mg/L	3 %	
NITRITE-N	15.16 mg/L	15.24 mg/L	1 %	
NITRATE-N	13.73 mg/L	13.54 mg/L	1 %	
SULFATE	53.11 mg/L	54.56 mg/L	3 %	

LOCKHEED ANALYTICAL LABORATORY
QUALITY CONTROL DATA SUMMARY
METHOD BLANK

WHC-SD-C018H-TRP-016, Rev 0

LAL BATCH: 315-wh

LABORATORY CONTROL SAMPLE (LCS)

LCS ID	ANALYTE	FOUND	FLAG
FILTERED BLANK	CHLORIDE	0.0 ug/L	U
FILTERED BLANK	NITRITE-N	0.0 ug/L	U
FILTERED BLANK	NITRATE-N	0.0 ug/L	U
FILTERED BLANK	SULFATE	0.0 ug/L	U

LOCKHEED ANALYTICAL LABORATORY
QUALITY CONTROL DATA SUMMARY
SPIKE AND SPIKE DUPLICATE ANALYSES

WHC-SD-C018H-TRP-016, Rev 0

LAL BATCH: 315-wh

MATRIX SPIKE SAMPLES

LCS ID	ANALYTE	SAMPLE RESULT	SPIKE ADDED	SPIKED SAMPLE	SPIKE RECOVERY	FLAG
L4046-60	CHLORIDE	0.61 mg/L	40.00 mg/L	40.74 mg/L	100 %	
L4046-60	NITRITE-N	U	12.00 mg/L	13.34 mg/L	111 %	
L4046-60	NITRATE-N	8	10.00 mg/L	10.35 mg/L	103 %	
L4046-60	SULFATE	0.68 mg/L	40.00 mg/L	40.13 mg/L	99 %	

MATRIX SPIKE DUPLICATE SAMPLES

LCS ID	ANALYTE	SAMPLE RESULT	SPIKE ADDED	SPIKED SAMPLE	SPIKE RECOVERY	FLAG

(No matrix spike duplicate)

MATRIX SPIKE - MATRIX SPIKE DUPLICATE COMPARISON

LCS ID	ANALYTE	MATRIX SPIKE	SPIKE DUPLICATE	RPD	FLAG

(No matrix spike duplicate)

LOCKHEED ANALYTICAL LABORATORY
QUALITY CONTROL DATA SUMMARY
DUPLICATE SAMPLE ANALYSES

WHC-SD-C018H-TRP-016, Rev 0

LAL BATCH: 315-wh

DUPLICATE SAMPLES

LCS ID	ANALYTE	SAMPLE RESULT	DUPLICATE SAMPLE	RPD	FLAG
L4046-60	CHLORIDE	611 ug/L	653 ug/L	7 %	
L4046-60	NITRITE-N	U	U		b
L4046-60	NITRATE-N	B	B	~~13 %~~ 3/31/95	b
L4046-60	SULFATE	675 ug/L	669 ug/L	1 %	b 3/31/95

B-0086

LOCKHEED ANALYTICAL LABORATORIES

WATER QUALITY PARAMETERS

CALIBRATON SUMMARY

SDG: —	UNITS: mg/L
LAL BATCH: 315twh	Date weights calibrated: 2-9-95
METHOD: 160.2	
ANALYTE: Total Suspended Solids	Balance ID: 23548
Manufacturer: Troemner	Lot #: 2512

ANALYTICAL BALANCE DATA

WEIGHT TYPE (Grams)	BALANCE CRITERIA (Upper Limit)	BALANCE CRITERIA (Lower Limit)	BALANCE RESPONSE (Grams)	DATE BALANCE CALIBRATION	LOG BOOK NUMBER
50.0 g	50.0050	49.9950	50.0000	3-16-95	0245
5.0 g	5.0010	4.9900	5.0000	=	•
0.5 g	0.5010	0.4990	0.4999	=	•

LOCKHEED ANALYTICAL LABORATORY

WATER QUALITY PARAMETERS

QUALITY CONTROL DATA SUMMARY

SDG: —	ANALYTE: Total Suspended Solids
LAL BATCH: 315-Wh	UNITS: mg/L

LABORATORY CONTROL SAMPLES

LCS ID	ACCEPTANCE LIMITS (%R)	TRUE VALUE	FOUND VALUE	% RECOVERY
TSS LCS	± 20	500	494	98.8

LABORATORY DUPLICATE SAMPLES

CLIENT SAMPLE ID	ACCEPTANCE LIMITS (RPD)	SAMPLE VALUE	DUPLICATE VALUE	RPD %
B0F655	10	0.0	1.0	b

MATRIX BLANK SAMPLES

LAL SAMPLE ID	ANALYSIS RESULT
PB315WH	5.0U

LOCKHEED ANALYTICAL LABORATORY

WATER QUALITY PARAMETERS

QUALITY CONTROL DATA SUMMARY

SDG: –	ANALYTE: Total Solids
LAL BATCH: 315-WH	UNITS: mg/L

LABORATORY CONTROL SAMPLES

LCS ID	ACCEPTANCE LIMITS (%R)	TRUE VALUE	FOUND VALUE	% RECOVERY
TDS LCS	100(+/-)15	1000	991	99.1%

LABORATORY DUPLICATE SAMPLES

CLIENT SAMPLE ID	ACCEPTANCE LIMITS (RPD)	SAMPLE VALUE	DUPLICATE VALUE	RPD %
B0F655	10	9	12	6

MATRIX BLANK SAMPLES

LAL SAMPLE ID	ANALYSIS RESULT
PB315WH	16 U

LOCKHEED ANALYTICAL LABORATORIES

WATER QUALITY PARAMETERS

CALIBRATON SUMMARY

SDG: —	UNITS: mg/L
LAL BATCH: 315-Wh	Date weights calibrated: 2-9-95
METHOD: 160.1	
ANALYTE: Total Dissolved Solids	Balance ID: 23548
Manufacturer: Troemner	Lot #: 2512

ANALYTICAL BALANCE DATA

WEIGHT TYPE (Grams)	BALANCE CRITERIA (Upper Limit)	BALANCE CRITERIA (Lower Limit)	BALANCE RESPONSE (Grams)	DATE BALANCE CALIBRATION	LOG BOOK NUMBER
50.0 g	50.0050	49.9950	49.9999	3-17-95	0245
5.0 g	5.0010	4.9900	4.9999	"	"
0.5 g	0.5010	0.4990	0.5001	"	"

B-0090

Lockheed Analytical Services

WATER

METALS

WHC-SD-C018H-TRP-016, Rev 0

TOTAL METALS RESULTS

Client Sample ID: BOF671	Date Collected: 03-12-95	Matrix: water
LAL Batch ID(s): 315 wh	Date Received: 03-15-95	SAF 95-035

Constituents	Method	Concentration (mg/L)	IDL (mg/L)	RDL (mg/L)	Data Qualifier(s)	Date Analyzed	LAL ID
Aluminum	6010	<0.07	0.07	0.20	U	03-23-95	L4046-37
Antimony	6010	0.051	0.05	0.060	B	03-23-95	L4046-37
Arsenic	6010	<0.05	0.05	0.20	U	03-23-95	L4046-37
Barium	6010	<0.03	0.03	0.20	U	03-23-95	L4046-37
Beryllium	6010	<0.001	0.001	0.005	U	03-23-95	L4046-37
Cadmium	6010	<0.004	0.004	0.005	U	03-23-95	L4046-37
Calcium	6010	0.48	0.05	5.0	B	03-23-95	L4046-37
Chromium	6010	<0.003	0.003	0.010	U	03-23-95	L4046-37
Cobalt	6010	<0.008	0.008	0.050	U	03-23-95	L4046-37
Copper	6010	0.0045	0.004	0.025	B	03-23-95	L4046-37
Iron	6010	0.026	0.010	0.10	B *	03-23-95	L4046-37
Lead	6010	<0.09	0.09	0.10	U	03-23-95	L4046-37
Magnesium	6010	0.086	0.06	5.0	B	03-23-95	L4046-37
Manganese	6010	<0.002	0.002	0.015	U	03-23-95	L4046-37
Nickel	6010	<0.012	0.012	0.040	U	03-23-95	L4046-37
Potassium	6010	<0.68	0.68	5.0	U	03-23-95	L4046-37
Selenium	6010	<0.09	0.09	0.3	U	03-23-95	L4046-37
Silver	6010	<0.008	0.008	0.010	U	03-23-95	L4046-37
Sodium	6010	0.50	0.03	5.0	B	03-23-95	L4046-37
Thallium	6010	<0.049	0.049	0.50	U	03-23-95	L4046-37
Vanadium	6010	<0.012	0.012	0.050	U	03-23-95	L4046-37
Zinc	6010	<0.011	0.011	0.020	U	03-23-95	L4046-37

Comments:

TOTAL METALS RESULTS

Client Sample ID: BOF674	Date Collected: 03-12-95	Matrix: water
LAL Batch ID(s): 315 wh	Date Received: 03-15-95	SAF 95-035

Constituents	Method	Concentration (mg/L)	IDL (mg/L)	RDL (mg/L)	Data Qualifier(s)	Date Analyzed	LAL ID
Aluminum	6010	<0.07	0.07	0.20	U	03-23-95	L4046-39
Antimony	6010	<0.05	0.05	0.060	U	03-23-95	L4046-39
Arsenic	6010	<0.05	0.05	0.20	U	03-23-95	L4046-39
Barium	6010	<0.03	0.03	0.20	U	03-23-95	L4046-39
Beryllium	6010	<0.001	0.001	0.005	U	03-23-95	L4046-39
Cadmium	6010	<0.004	0.004	0.005	U	03-23-95	L4046-39
Calcium	6010	0.49	0.05	5.0	B	03-23-95	L4046-39
Chromium	6010	<0.003	0.003	0.010	U	03-23-95	L4046-39
Cobalt	6010	<0.008	0.008	0.050	U	03-23-95	L4046-39
Copper	6010	0.0043	0.004	0.025	B	03-23-95	L4046-39
Iron	6010	0.020	0.010	0.10	B	03-23-95	L4046-39
Lead	6010	<0.09	0.09	0.10	U	03-23-95	L4046-39
Magnesium	6010	0.077	0.06	5.0	B	03-23-95	L4046-39
Manganese	6010	<0.002	0.002	0.015	U	03-23-95	L4046-39
Nickel	6010	<0.012	0.012	0.040	U	03-23-95	L4046-39
Potassium	6010	<0.68	0.68	5.0	U	03-23-95	L4046-39
Selenium	6010	<0.09	0.09	0.30	U	03-23-95	L4046-39
Silver	6010	<0.008	0.008	0.010	U	03-23-95	L4046-39
Sodium	6010	0.52	0.03	5.0	B	03-23-95	L4046-39
Thallium	6010	<0.049	0.049	0.50	U	03-23-95	L4046-39
Vanadium	6010	<0.012	0.012	0.050	U	03-23-95	L4046-39
Zinc	6010	<0.011	0.011	0.020	U	03-23-95	L4046-39

Comments:

TOTAL METALS RESULTS

Client Sample ID: BOF672	Date Collected: 03-12-95	Matrix: water
LAL Batch ID(s): 315 wh	Date Received: 03-15-95	SAF 95-035

Constituents	Method	Concentration (mg/L)	IDL (mg/L)	RDL (mg/L)	Data Qualifier(s)	Date Analyzed	LAL ID
Aluminum	6010	<0.07	0.07	0.20	U	03-23-95	L4046-41
Antimony	6010	<0.05	0.05	0.060	U	03-23-95	L4046-41
Arsenic	6010	<0.05	0.05	0.20	U	03-23-95	L4046-41
Barium	6010	<0.03	0.03	0.20	U	03-23-95	L4046-41
Beryllium	6010	<0.001	0.001	0.005	U	03-23-95	L4046-41
Cadmium	6010	<0.004	0.004	0.005	U	03-23-95	L4046-41
Calcium	6010	0.48	0.05	5.0	B	03-23-95	L4046-41
Chromium	6010	<0.003	0.003	0.010	U	03-23-95	L4046-41
Cobalt	6010	<0.008	0.008	0.050	U	03-23-95	L4046-41
Copper	6010	<0.004	0.004	0.025	U	03-23-95	L4046-41
Iron	6010	0.018	0.010	0.10	B	03-23-95	L4046-41
Lead	6010	<0.09	0.09	0.10	U	03-23-95	L4046-41
Magnesium	6010	0.073	0.06	5.0	B	03-23-95	L4046-41
Manganese	6010	<0.002	0.002	0.015	U	03-23-95	L4046-41
Nickel	6010	<0.012	0.012	0.040	U	03-23-95	L4046-41
Potassium	6010	<0.68	0.68	5.0	U	03-23-95	L4046-41
Selenium	6010	<0.09	0.09	0.30	U	03-23-95	L4046-41
Silver	6010	<0.008	0.008	0.010	U	03-23-95	L4046-41
Sodium	6010	0.53	0.03	5.0	B	03-23-95	L4046-41
Thallium	6010	<0.049	0.049	0.50	U	03-23-95	L4046-41
Vanadium	6010	<0.012	0.012	0.050	U	03-23-95	L4046-41
Zinc	6010	<0.011	0.011	0.020	U	03-23-95	L4046-41

Comments:

WHC-SD-C018H-TRP-016, Rev 0

TOTAL METALS RESULTS

Client Sample ID: BOF675	Date Collected: 03-12-95	Matrix: water.
LAL Batch ID(s): 315 wh	Date Received: 03-15-95	SAF 95-035

Constituents	Method	Concentration (mg/L)	IDL (mg/L)	RDL (mg/L)	Data Qualifier(s)	Date Analyzed	LAL ID
Aluminum	6010	<0.07	0.07	0.20	U	03-23-95	L4046-43
Antimony	6010	<0.05	0.05	0.060	U	03-23-95	L4046-43
Arsenic	6010	<0.05	0.05	0.20	U	03-23-95	L4046-43
Barium	6010	<0.03	0.03	0.20	U	03-23-95	L4046-43
Beryllium	6010	<0.001	0.001	0.005	U	03-23-95	L4046-43
Cadmium	6010	<0.004	0.004	0.005	U	03-23-95	L4046-43
Calcium	6010	0.48	0.05	5.0	B	03-23-95	L4046-43
Chromium	6010	<0.003	0.003	0.010	U	03-23-95	L4046-43
Cobalt	6010	<0.008	0.008	0.050	U	03-23-95	L4046-43
Copper	6010	0.0043	0.004	0.025	B	03-23-95	L4046-43
Iron	6010	0.027	0.010	0.10	B *	03-23-95	L4046-43
Lead	6010	<0.09	0.09	0.10	U	03-23-95	L4046-43
Magnesium	6010	0.084	0.06	5.0	B	03-23-95	L4046-43
Manganese	6010	0.0031	0.002	0.015	B	03-23-95	L4046-43
Nickel	6010	<0.012	0.012	0.040	U	03-23-95	L4046-43
Potassium	6010	<0.68	0.68	5.0	U	03-23-95	L4046-43
Selenium	6010	<0.09	0.09	0.30	U	03-23-95	L4046-43
Silver	6010	<0.008	0.008	0.010	U	03-23-95	L4046-43
Sodium	6010	0.55	0.03	5.0	B	03-23-95	L4046-43
Thallium	6010	<0.049	0.049	0.50	U	03-23-95	L4046-43
Vanadium	6010	<0.012	0.012	0.050	U	03-23-95	L4046-43
Zinc	6010	<0.011	0.011	0.020	U	03-23-95	L4046-43

Comments:

TOTAL METALS RESULTS

Client Sample ID: BOF670	Date Collected: 03-12-95	Matrix: water
LAL Batch ID(s): 315 wh	Date Received: 03-15-95	SAF 95-035

Constituents	Method	Concentration (mg/L)	IDL (mg/L)	RDL (mg/L)	Data Qualifier(s)	Date Analyzed	LAL ID
Aluminum	6010	<0.07	0.07	0.20	U	03-23-95	L4046-45
Antimony	6010	<0.05	0.05	0.060	U	03-23-95	L4046-45
Arsenic	6010	<0.05	0.05	0.20	U	03-23-95	L4046-45
Barium	6010	<0.03	0.03	0.20	U	03-23-95	L4046-45
Beryllium	6010	<0.001	0.001	0.005	U	03-23-95	L4046-45
Cadmium	6010	<0.004	0.004	0.005	U	03-23-95	L4046-45
Calcium	6010	0.48	0.05	5.0	B	03-23-95	L4046-45
Chromium	6010	<0.003	0.003	0.010	U	03-23-95	L4046-45
Cobalt	6010	<0.008	0.008	0.050	U	03-23-95	L4046-45
Copper	6010	0.0052	0.004	0.025	B	03-23-95	L4046-45
Iron	6010	0.022	0.010	0.10	B *	03-23-95	L4046-45
Lead	6010	<0.09	0.09	0.10	U	03-23-95	L4046-45
Magnesium	6010	0.077	0.06	5.0	B	03-23-95	L4046-45
Manganese	6010	<0.002	0.002	0.015	U	03-23-95	L4046-45
Mercury	7471	0.00015	0.00003	0.0002	B N	03-21-95	L4046-45
Nickel	6010	<0.012	0.012	0.040	U	03-23-95	L4046-45
Potassium	6010	<0.68	0.68	5.0	U	03-23-95	L4046-45
Selenium	6010	<0.09	0.09	0.30	U	03-23-95	L4046-45
Silver	6010	<0.008	0.008	0.010	U	03-23-95	L4046-45
Sodium	6010	0.57	0.03	5.0	B	03-23-95	L4046-45
Thallium	6010	0.062	0.049	0.50	B	03-23-95	L4046-45
Vanadium	6010	<0.012	0.012	0.050	U	03-23-95	L4046-45
Zinc	6010	<0.011	0.011	0.020	U	03-23-95	L4046-45

Comments:

WHC-SD-C018H-TRP-016, Rev 0

TOTAL METALS RESULTS

Client Sample ID: BOF673	Date Collected: 03-12-95	Matrix: water
LAL Batch ID(s): 315 wh	Date Received: 03-15-95	SAF 95-035

Constituents	Method	Concentration (mg/L)	IDL (mg/L)	RDL (mg/L)	Data Qualifier(s)	Date Analyzed	LAL ID
Aluminum	6010	<0.07	0.07	0.20	U	03-23-95	L4046-47
Antimony	6010	<0.05	0.05	0.060	U	03-23-95	L4046-47
Arsenic	6010	<0.05	0.05	0.20	U	03-23-95	L4046-47
Barium	6010	<0.03	0.03	0.20	U	03-23-95	L4046-47
Beryllium	6010	<0.001	0.001	0.005	U	03-23-95	L4046-47
Cadmium	6010	<0.004	0.004	0.005	U	03-23-95	L4046-47
Calcium	6010	0.46	0.05	5.0	B	03-23-95	L4046-47
Chromium	6010	<0.003	0.003	0.010	U	03-23-95	L4046-47
Cobalt	6010	<0.008	0.008	0.050	U	03-23-95	L4046-47
Copper	6010	<0.004	0.004	0.025	U	03-23-95	L4046-47
Iron	6010	0.080	0.010	0.10	B *	03-23-95	L4046-47
Lead	6010	<0.09	0.09	0.10	U	03-23-95	L4046-47
Magnesium	6010	0.085	0.06	5.0	B	03-23-95	L4046-47
Manganese	6010	<0.002	0.002	0.015	U	03-23-95	L4046-47
Mercury	7471	0.00014	0.00003	0.0002	B N	03-21-95	L4046-47
Nickel	6010	<0.012	0.012	0.040	U	03-23-95	L4046-47
Potassium	6010	<0.68	0.68	5.0	U	03-23-95	L4046-47
Selenium	6010	<0.09	0.09	0.30	U	03-23-95	L4046-47
Silver	6010	<0.008	0.008	0.010	U	03-23-95	L4046-47
Sodium	6010	0.48	0.03	5.0	B	03-23-95	L4046-47
Thallium	6010	<0.049	0.049	0.50	U	03-23-95	L4046-47
Vanadium	6010	<0.012	0.012	0.050	U	03-23-95	L4046-47
Zinc	6010	<0.011	0.011	0.020	U	03-23-95	L4046-47

Comments:

WHC-SD-C018H-TRP-016, Rev 0

TOTAL METALS RESULTS

Client Sample ID: BOF656	Date Collected: 03-10-95	Matrix: water
LAL Batch ID(s): 315 wh	Date Received: 03-15-95	SAF 95-035

Constituents	Method	Concentration (mg/L)	IDL (mg/L)	RDL (mg/L)	Data Qualifier(s)	Date Analyzed	LAL ID
Aluminum	6010	0.071	0.07	0.20	B	03-23-95	L4046-49
Antimony	6010	<0.05	0.05	0.060	U	03-23-95	L4046-49
Arsenic	6010	0.070	0.05	0.20	B	03-23-95	L4046-49
Barium	6010	<0.03	0.03	0.20	U	03-23-95	L4046-49
Beryllium	6010	<0.001	0.001	0.005	U	03-23-95	L4046-49
Cadmium	6010	<0.004	0.004	0.005	U	03-23-95	L4046-49
Calcium	6010	0.50	0.05	5.0	B	03-23-95	L4046-49
Chromium	6010	<0.003	0.003	0.010	U	03-23-95	L4046-49
Cobalt	6010	<0.008	0.008	0.050	U	03-23-95	L4046-49
Copper	6010	0.018	0.004	0.025	B	03-23-95	L4046-49
Iron	6010	0.033	0.010	0.10	B *	03-23-95	L4046-49
Lead	6010	<0.09	0.09	0.10	U	03-23-95	L4046-49
Magnesium	6010	0.095	0.06	5.0	B	03-23-95	L4046-49
Manganese	6010	<0.002	0.002	0.015	U	03-23-95	L4046-49
Nickel	6010	<0.012	0.012	0.040	U	03-23-95	L4046-49
Potassium	6010	<0.68	0.68	5.0	U	03-23-95	L4046-49
Selenium	6010	<0.09	0.09	0.30	U	03-23-95	L4046-49
Silver	6010	<0.008	0.008	0.010	U	03-23-95	L4046-49
Sodium	6010	0.51	0.03	5.0	B	03-23-95	L4046-49
Thallium	6010	<0.049	0.049	0.50	U	03-23-95	L4046-49
Vanadium	6010	<0.012	0.012	0.050	U	03-23-95	L4046-49
Zinc	6010	<0.011	0.011	0.020	U	03-23-95	L4046-49

Comments:

TOTAL METALS RESULTS

Client Sample ID: BOF659	Date Collected: 03-10-95	Matrix: water
LAL Batch ID(s): 315 wh	Date Received: 03-15-95	SAF 95-035

Constituents	Method	Concentration (mg/L)	IDL (mg/L)	RDL (mg/L)	Data Qualifier(s)	Date Analyzed	LAL ID
Aluminum	6010	<0.07	0.07	0.20	U	03-23-95	L4046-51
Antimony	6010	<0.05	0.05	0.060	U	03-23-95	L4046-51
Arsenic	6010	0.070	0.05	0.20	B	03-23-95	L4046-51
Barium	6010	<0.03	0.03	0.20	U	03-23-95	L4046-51
Beryllium	6010	<0.001	0.001	0.005	U	03-23-95	L4046-51
Cadmium	6010	<0.004	0.004	0.005	U	03-23-95	L4046-51
Calcium	6010	0.48	0.05	5.0	B	03-23-95	L4046-51
Chromium	6010	<0.003	0.003	0.010	U	03-23-95	L4046-51
Cobalt	6010	<0.008	0.008	0.050	U	03-23-95	L4046-51
Copper	6010	0.0040	0.004	0.025	B	03-23-95	L4046-51
Iron	6010	0.026	0.010	0.10	B *	03-23-95	L4046-51
Lead	6010	<0.09	0.09	0.10	U	03-23-95	L4046-51
Magnesium	6010	0.079	0.06	5.0	B	03-23-95	L4046-51
Manganese	6010	<0.002	0.002	0.015	U	03-23-95	L4046-51
Nickel	6010	<0.012	0.012	0.040	U	03-23-95	L4046-51
Potassium	6010	<0.68	0.68	5.0	U	03-23-95	L4046-51
Selenium	6010	<0.09	0.09	0.30	U	03-23-95	L4046-51
Silver	6010	<0.008	0.008	0.010	U	03-23-95	L4046-51
Sodium	6010	0.52	0.03	5.0	B	03-23-95	L4046-51
Thallium	6010	<0.049	0.049	0.50	U	03-23-95	L4046-51
Vanadium	6010	<0.012	0.012	0.050	U	03-23-95	L4046-51
Zinc	6010	<0.011	0.011	0.020	U	03-23-95	L4046-51

Comments:

TOTAL METALS RESULTS

Client Sample ID: BOF657	Date Collected: 03-10-95	Matrix: water
LAL Batch ID(s): 315 wh	Date Received: 03-15-95	SAF 95-035

Constituents	Method	Concentration (mg/L)	IDL (mg/L)	RDL (mg/L)	Data Qualifier(s)	Date Analyzed	LAL ID
Aluminum	6010	<0.07	0.07	0.20	U	03-23-95	L4046-53
Antimony	6010	<0.05	0.05	0.060	U	03-23-95	L4046-53
Arsenic	6010	<0.05	0.05	0.20	U	03-23-95	L4046-53
Barium	6010	<0.03	0.03	0.20	U	03-23-95	L4046-53
Beryllium	6010	<0.001	0.001	0.005	U	03-23-95	L4046-53
Cadmium	6010	<0.004	0.004	0.005	U	03-23-95	L4046-53
Calcium	6010	0.49	0.05	5.0	B	03-23-95	L4046-53
Chromium	6010	<0.003	0.003	0.010	U	03-23-95	L4046-53
Cobalt	6010	<0.008	0.008	0.050	U	03-23-95	L4046-53
Copper	6010	0.0041	0.004	0.025	B	03-23-95	L4046-53
Iron	6010	0.034	0.010	0.10	B *	03-23-95	L4046-53
Lead	6010	<0.09	0.09	0.10	U	03-23-95	L4046-53
Magnesium	6010	0.088	0.06	5.0	B	03-23-95	L4046-53
Manganese	6010	<0.002	0.002	0.015	U	03-23-95	L4046-53
Nickel	6010	<0.012	0.012	0.040	U	03-23-95	L4046-53
Potassium	6010	<0.68	0.68	5.0	U	03-23-95	L4046-53
Selenium	6010	<0.09	0.09	0.30	U	03-23-95	L4046-53
Silver	6010	<0.008	0.008	0.010	U	03-23-95	L4046-53
Sodium	6010	0.57	0.03	5.0	B	03-23-95	L4046-53
Thallium	6010	<0.049	0.049	0.50	U	03-23-95	L4046-53
Vanadium	6010	<0.012	0.012	0.050	U	03-23-95	L4046-53
Zinc	6010	<0.011	0.011	0.020	U	03-23-95	L4046-53

Comments:

WHC-SD-C018H-TRP-016, Rev 0 TOTAL METALS RESULTS

Client Sample ID: BOF660	Date Collected: 03-10-95	Matrix: water
LAL Batch ID(s): 315 wh	Date Received: 03-15-95	SAF 95-035

Constituents	Method	Concentration (mg/L)	IDL (mg/L)	RDL (mg/L)	Data Qualifier(s)	Date Analyzed	LAL ID
Aluminum	6010	<0.07	0.07	0.20	U	03-23-95	L4046-55
Antimony	6010	<0.05	0.05	0.060	U	03-23-95	L4046-55
Arsenic	6010	<0.05	0.05	0.20	U	03-23-95	L4046-55
Barium	6010	<0.03	0.03	0.20	U	03-23-95	L4046-55
Beryllium	6010	<0.001	0.001	0.005	U	03-23-95	L4046-55
Cadmium	6010	<0.004	0.004	0.005	U	03-23-95	L4046-55
Calcium	6010	0.48	0.05	5.0	B	03-23-95	L4046-55
Chromium	6010	<0.003	0.003	0.010	U	03-23-95	L4046-55
Cobalt	6010	<0.008	0.008	0.050	U	03-23-95	L4046-55
Copper	6010	0.0050	0.004	0.025	B	03-23-95	L4046-55
Iron	6010	0.024	0.010	0.10	B *	03-23-95	L4046-55
Lead	6010	<0.09	0.09	0.10	U	03-23-95	L4046-55
Magnesium	6010	0.073	0.06	5.0	B	03-23-95	L4046-55
Manganese	6010	<0.002	0.002	0.015	U	03-23-95	L4046-55
Nickel	6010	<0.012	0.012	0.040	U	03-23-95	L4046-55
Potassium	6010	<0.68	0.68	5.0	U	03-23-95	L4046-55
Selenium	6010	<0.09	0.09	0.30	U	03-23-95	L4046-55
Silver	6010	<0.008	0.008	0.010	U	03-23-95	L4046-55
Sodium	6010	0.55	0.03	5.0	B	03-23-95	L4046-55
Thallium	6010	<0.049	0.049	0.50	U	03-23-95	L4046-55
Vanadium	6010	<0.012	0.012	0.050	U	03-23-95	L4046-55
Zinc	6010	<0.011	0.011	0.020	U	03-23-95	L4046-55

Comments:

TOTAL METALS RESULTS

Client Sample ID: BOF655	Date Collected: 03-10-95	Matrix: water
LAL Batch ID(s): 315 wh	Date Received: 03-15-95	SAF 95-035

Constituents	Method	Concentration (mg/L)	IDL (mg/L)	RDL (mg/L)	Data Qualifier(s)	Date Analyzed	LAL ID
Aluminum	6010	0.091	0.07	0.20	B	03-23-95	L4046-57
Antimony	6010	<0.05	0.05	0.060	U	03-23-95	L4046-57
Arsenic	6010	<0.05	0.05	0.20	U	03-23-95	L4046-57
Barium	6010	<0.03	0.03	0.20	U	03-23-95	L4046-57
Beryllium	6010	<0.001	0.001	0.005	U	03-23-95	L4046-57
Cadmium	6010	<0.004	0.004	0.005	U	03-23-95	L4046-57
Calcium	6010	0.51	0.05	5.0	B	03-23-95	L4046-57
Chromium	6010	<0.003	0.003	0.010	U	03-23-95	L4046-57
Cobalt	6010	<0.008	0.008	0.050	U	03-23-95	L4046-57
Copper	6010	0.0081	0.004	0.025	B	03-23-95	L4046-57
Iron	6010	0.14	0.010	0.10	*	03-23-95	L4046-57
Lead	6010	<0.09	0.09	0.10	U	03-23-95	L4046-57
Magnesium	6010	0.095	0.06	5.0	B	03-23-95	L4046-57
Manganese	6010	0.0077	0.002	0.015	B	03-23-95	L4046-57
Mercury	7471	0.00015	0.00003	0.0002	B N	03-21-95	L4046-57
Nickel	6010	0.017	0.012	0.040	B	03-23-95	L4046-57
Potassium	6010	<0.68	0.68	5.0	U	03-23-95	L4046-57
Selenium	6010	0.094	0.09	0.30	B	03-23-95	L4046-57
Silver	6010	<0.008	0.008	0.010	U	03-23-95	L4046-57
Sodium	6010	0.53	0.03	5.0	B	03-23-95	L4046-57
Thallium	6010	<0.049	0.049	0.50	U	03-23-95	L4046-57
Vanadium	6010	<0.012	0.012	0.050	U	03-23-95	L4046-57
Zinc	6010	<0.011	0.011	0.020	U	03-23-95	L4046-57

Comments:

TOTAL METALS RESULTS

Client Sample ID: BOF658	Date Collected: 03-10-95	Matrix: water
LAL Batch ID(s): 315 wh	Date Received: 03-15-95	SAF 95-035

Constituents	Method	Concentration (mg/L)	IDL (mg/L)	RDL (mg/L)	Data Qualifier(s)	Date Analyzed	LAL ID
Aluminum	6010	<0.07	0.07	0.20	U	03-23-95	L4046-62
Antimony	6010	<0.05	0.05	0.060	U	03-23-95	L4046-62
Arsenic	6010	<0.05	0.05	0.20	U	03-23-95	L4046-62
Barium	6010	<0.03	0.03	0.20	U	03-23-95	L4046-62
Beryllium	6010	<0.001	0.001	0.005	U	03-23-95	L4046-62
Cadmium	6010	<0.004	0.004	0.005	U	03-23-95	L4046-62
Calcium	6010	0.47	0.05	5.0	B	03-23-95	L4046-62
Chromium	6010	<0.003	0.003	0.010	U	03-23-95	L4046-62
Cobalt	6010	<0.008	0.008	0.050	U	03-23-95	L4046-62
Copper	6010	0.0041	0.004	0.025	B	03-23-95	L4046-62
Iron	6010	0.056	0.010	0.10	B *	03-23-95	L4046-62
Lead	6010	<0.09	0.09	0.10	U	03-23-95	L4046-62
Magnesium	6010	0.081	0.06	5.0	B	03-23-95	L4046-62
Manganese	6010	<0.002	0.002	0.015	U	03-23-95	L4046-62
Mercury	7471	0.00015	0.00003	0.0002	B N	03-21-95	L4046-62
Nickel	6010	<0.012	0.012	0.040	U	03-23-95	L4046-62
Potassium	6010	<0.68	0.68	5.0	U	03-23-95	L4046-62
Selenium	6010	<0.09	0.09	0.30	U	03-23-95	L4046-62
Silver	6010	<0.008	0.008	0.010	U	03-23-95	L4046-62
Sodium	6010	0.51	0.03	5.0	B	03-23-95	L4046-62
Thallium	6010	<0.049	0.049	0.50	U	03-23-95	L4046-62
Vanadium	6010	<0.012	0.012	0.050	U	03-23-95	L4046-62
Zinc	6010	<0.011	0.011	0.020	U	03-23-95	L4046-62

Comments:

TOTAL METALS RESULTS

Client Sample ID: BOF662	Date Collected: 03-11-95	Matrix: water
LAL Batch ID(s): 315 wh	Date Received: 03-15-95	SAF 95-035

Constituents	Method	Concentration (mg/L)	IDL (mg/L)	RDL (mg/L)	Data Qualifier(s)	Date Analyzed	LAL ID
Aluminum	6010	<0.07	0.07	0.20	U	03-23-95	L4046-64
Antimony	6010	<0.05	0.05	0.060	U	03-23-95	L4046-64
Arsenic	6010	<0.05	0.05	0.20	U	03-23-95	L4046-64
Barium	6010	<0.03	0.03	0.20	U	03-23-95	L4046-64
Beryllium	6010	<0.001	0.001	0.005	U	03-23-95	L4046-64
Cadmium	6010	<0.004	0.004	0.005	U	03-23-95	L4046-64
Calcium	6010	0.54	0.05	5.0	B	03-23-95	L4046-64
Chromium	6010	<0.003	0.003	0.010	U	03-23-95	L4046-64
Cobalt	6010	<0.008	0.008	0.050	U	03-23-95	L4046-64
Copper	6010	0.0057	0.004	0.025	B	03-23-95	L4046-64
Iron	6010	0.027	0.010	0.10	B *	03-23-95	L4046-64
Lead	6010	<0.09	0.09	0.10	U	03-23-95	L4046-64
Magnesium	6010	0.087	0.06	5.0	B	03-23-95	L4046-64
Manganese	6010	<0.002	0.002	0.015	U	03-23-95	L4046-64
Nickel	6010	<0.012	0.012	0.040	U	03-23-95	L4046-64
Potassium	6010	<0.68	0.68	5.0	U	03-23-95	L4046-64
Selenium	6010	0.091	0.09	0.30	B	03-23-95	L4046-64
Silver	6010	<0.008	0.008	0.010	U	03-23-95	L4046-64
Sodium	6010	0.50	0.03	5.0	B	03-23-95	L4046-64
Thallium	6010	<0.049	0.049	0.50	U	03-23-95	L4046-64
Vanadium	6010	<0.012	0.012	0.050	U	03-23-95	L4046-64
Zinc	6010	<0.011	0.011	0.020	U	03-23-95	L4046-64

Comments:

WHC-SD-C018H-TRP-016, Rev 0

TOTAL METALS RESULTS

Client Sample ID: BOF665	Date Collected: 03-11-95	Matrix: water
LAL Batch ID(s): 315 wh	Date Received: 03-15-95	SAF 95-035

Constituents	Method	Concentration (mg/L)	IDL (mg/L)	RDL (mg/L)	Data Qualifier(s)	Date Analyzed	LAL ID
Aluminum	6010	<0.07	0.07	0.20	U	03-23-95	L4046-66
Antimony	6010	<0.05	0.05	0.060	U	03-23-95	L4046-66
Arsenic	6010	<0.05	0.05	0.20	U	03-23-95	L4046-66
Barium	6010	<0.03	0.03	0.20	U	03-23-95	L4046-66
Beryllium	6010	<0.001	0.001	0.005	U	03-23-95	L4046-66
Cadmium	6010	<0.004	0.004	0.005	U	03-23-95	L4046-66
Calcium	6010	0.47	0.05	5.0	B	03-23-95	L4046-66
Chromium	6010	<0.003	0.003	0.010	U	03-23-95	L4046-66
Cobalt	6010	<0.008	0.008	0.050	U	03-23-95	L4046-66
Copper	6010	0.0045	0.004	0.025	B	03-23-95	L4046-66
Iron	6010	0.013	0.010	0.10	B *	03-23-95	L4046-66
Lead	6010	<0.09	0.09	0.10	U	03-23-95	L4046-66
Magnesium	6010	0.082	0.06	5.0	B	03-23-95	L4046-66
Manganese	6010	<0.002	0.002	0.015	U	03-23-95	L4046-66
Nickel	6010	<0.012	0.012	0.040	U	03-23-95	L4046-66
Potassium	6010	<0.68	0.68	5.0	U	03-23-95	L4046-66
Selenium	6010	<0.09	0.09	0.30	U	03-23-95	L4046-66
Silver	6010	<0.008	0.008	0.010	U	03-23-95	L4046-66
Sodium	6010	0.50	0.03	5.0	B	03-23-95	L4046-66
Thallium	6010	<0.049	0.049	0.50	U	03-23-95	L4046-66
Vanadium	6010	<0.012	0.012	0.050	U	03-23-95	L4046-66
Zinc	6010	<0.011	0.011	0.020	U	03-23-95	L4046-66

Comments:

TOTAL METALS RESULTS

Client Sample ID: BOF663	Date Collected: 03-11-95	Matrix: water
LAL Batch ID(s): 315 wh	Date Received: 03-15-95	SAF 95-035

Constituents	Method	Concentration (mg/L)	IDL (mg/L)	RDL (mg/L)	Data Qualifier(s)	Date Analyzed	LAL ID
Aluminum	6010	<0.07	0.07	0.20	U	03-23-95	L4046-68
Antimony	6010	<0.05	0.05	0.060	U	03-23-95	L4046-68
Arsenic	6010	<0.05	0.05	0.20	U	03-23-95	L4046-68
Barium	6010	<0.03	0.03	0.20	U	03-23-95	L4046-68
Beryllium	6010	<0.001	0.001	0.005	U	03-23-95	L4046-68
Cadmium	6010	<0.004	0.004	0.005	U	03-23-95	L4046-68
Calcium	6010	0.52	0.05	5.0	B	03-23-95	L4046-68
Chromium	6010	<0.003	0.003	0.010	U	03-23-95	L4046-68
Cobalt	6010	<0.008	0.008	0.050	U	03-23-95	L4046-68
Copper	6010	0.0045	0.004	0.025	B	03-23-95	L4046-68
Iron	6010	0.024	0.010	0.10	B *	03-23-95	L4046-68
Lead	6010	<0.09	0.09	0.10	U	03-23-95	L4046-68
Magnesium	6010	0.078	0.06	5.0	B	03-23-95	L4046-68
Manganese	6010	<0.002	0.002	0.015	U	03-23-95	L4046-68
Nickel	6010	<0.012	0.012	0.040	U	03-23-95	L4046-68
Potassium	6010	<0.68	0.68	5.0	U	03-23-95	L4046-68
Selenium	6010	<0.09	0.09	0.30	U	03-23-95	L4046-68
Silver	6010	<0.008	0.008	0.010	U	03-23-95	L4046-68
Sodium	6010	0.49	0.03	5.0	B	03-23-95	L4046-68
Thallium	6010	<0.049	0.049	0.50	U	03-23-95	L4046-68
Vanadium	6010	<0.012	0.012	0.050	U	03-23-95	L4046-68
Zinc	6010	<0.011	0.011	0.020	U	03-23-95	L4046-68

Comments:

TOTAL METALS RESULTS

Client Sample ID: BOF666	Date Collected: 03-11-95	Matrix: water
LAL Batch ID(s): 315 wh	Date Received: 03-15-95	SAF 95-035

Constituents	Method	Concentration (mg/L)	IDL (mg/L)	RDL (mg/L)	Data Qualifier(s)	Date Analyzed	LAL ID
Aluminum	6010	<0.07	0.07	0.20	U	03-23-95	L4046-70
Antimony	6010	<0.05	0.05	0.060	U	03-23-95	L4046-70
Arsenic	6010	<0.05	0.05	0.20	U	03-23-95	L4046-70
Barium	6010	<0.03	0.03	0.20	U	03-23-95	L4046-70
Beryllium	6010	<0.001	0.001	0.005	U	03-23-95	L4046-70
Cadmium	6010	<0.004	0.004	0.005	U	03-23-95	L4046-70
Calcium	6010	0.50	0.05	5.0	B	03-23-95	L4046-70
Chromium	6010	<0.003	0.003	0.010	U	03-23-95	L4046-70
Cobalt	6010	<0.008	0.008	0.050	U	03-23-95	L4046-70
Copper	6010	<0.004	0.004	0.025	U	03-23-95	L4046-70
Iron	6010	0.030	0.010	0.10	B *	03-23-95	L4046-70
Lead	6010	<0.09	0.09	0.10	U	03-23-95	L4046-70
Magnesium	6010	0.097	0.06	5.0	B	03-23-95	L4046-70
Manganese	6010	<0.002	0.002	0.015	U	03-23-95	L4046-70
Nickel	6010	<0.012	0.012	0.040	U	03-23-95	L4046-70
Potassium	6010	<0.68	0.68	5.0	U	03-23-95	L4046-70
Selenium	6010	<0.09	0.09	0.30	U	03-23-95	L4046-70
Silver	6010	<0.008	0.008	0.010	U	03-23-95	L4046-70
Sodium	6010	0.53	0.03	5.0	B	03-23-95	L4046-70
Thallium	6010	<0.049	0.049	0.50	U	03-23-95	L4046-70
Vanadium	6010	<0.012	0.012	0.050	U	03-23-95	L4046-70
Zinc	6010	<0.011	0.011	0.020	U	03-23-95	L4046-70

Comments:

WHC-SD-C018H-TRP-016, Rev 0

TOTAL METALS RESULTS

Client Sample ID: BOF661	Date Collected: 03-11-95	Matrix: water
LAL Batch ID(s): 315 wh	Date Received: 03-15-95	SAF 95-035

Constituents	Method	Concentration (mg/L)	IDL (mg/L)	RDL (mg/L)	Data Qualifier(s)	Date Analyzed	LAL ID
Aluminum	6010	<0.07	0.07	0.20	U	03-23-95	L4046-72
Antimony	6010	<0.05	0.05	0.060	U	03-23-95	L4046-72
Arsenic	6010	<0.05	0.05	0.20	U	03-23-95	L4046-72
Barium	6010	<0.03	0.03	0.20	U	03-23-95	L4046-72
Beryllium	6010	<0.001	0.001	0.005	U	03-23-95	L4046-72
Cadmium	6010	<0.004	0.004	0.005	U	03-23-95	L4046-72
Calcium	6010	0.50	0.05	5.0	B	03-23-95	L4046-72
Chromium	6010	<0.003	0.003	0.010	U	03-23-95	L4046-72
Cobalt	6010	<0.008	0.008	0.050	U	03-23-95	L4046-72
Copper	6010	0.0040	0.004	0.025	B	03-23-95	L4046-72
Iron	6010	0.025	0.010	0.10	B *	03-23-95	L4046-72
Lead	6010	<0.09	0.09	0.10	U	03-23-95	L4046-72
Magnesium	6010	0.082	0.06	5.0	B	03-23-95	L4046-72
Manganese	6010	<0.002	0.002	0.015	U	03-23-95	L4046-72
Mercury	7471	0.00016	0.00003	0.0002	B N	03-21-95	L4046-72
Nickel	6010	<0.012	0.012	0.040	U	03-23-95	L4046-72
Potassium	6010	<0.68	0.68	5.0	U	03-23-95	L4046-72
Selenium	6010	<0.09	0.09	0.30	U	03-23-95	L4046-72
Silver	6010	<0.008	0.008	0.010	U	03-23-95	L4046-72
Sodium	6010	0.51	0.03	5.0	B	03-23-95	L4046-72
Thallium	6010	<0.049	0.049	0.50	U	03-23-95	L4046-72
Vanadium	6010	<0.012	0.012	0.050	U	03-23-95	L4046-72
Zinc	6010	<0.011	0.011	0.020	U	03-23-95	L4046-72

Comments:

WHC-SD-C018H-TRP-016, Rev 0 TOTAL METALS RESULTS

Client Sample ID: BOF664	Date Collected: 03-11-95	Matrix: water
LAL Batch ID(s): 315 wh	Date Received: 03-15-95	SAF 95-035

Constituents	Method	Concentration (mg/L)	IDL (mg/L)	RDL (mg/L)	Data Qualifier(s)	Date Analyzed	LAL ID
Aluminum	6010	<0.07	0.07	0.20	U	03-23-95	L4046-74
Antimony	6010	0.053	0.05	0.060	B	03-23-95	L4046-74
Arsenic	6010	<0.05	0.05	0.20	U	03-23-95	L4046-74
Barium	6010	<0.03	0.03	0.20	U	03-23-95	L4046-74
Beryllium	6010	<0.001	0.001	0.005	U	03-23-95	L4046-74
Cadmium	6010	<0.004	0.004	0.005	U	03-23-95	L4046-74
Calcium	6010	0.46	0.05	5.0	B	03-23-95	L4046-74
Chromium	6010	<0.003	0.003	0.010	U	03-23-95	L4046-74
Cobalt	6010	<0.008	0.008	0.050	U	03-23-95	L4046-74
Copper	6010	0.0045	0.004	0.025	B	03-23-95	L4046-74
Iron	6010	0.019	0.010	0.10	B	03-23-95	L4046-74
Lead	6010	<0.09	0.09	0.10	U	03-23-95	L4046-74
Magnesium	6010	0.075	0.06	5.0	B	03-23-95	L4046-74
Manganese	6010	<0.002	0.002	0.015	U	03-23-95	L4046-74
Mercury	7471	0.00017	0.00003	0.0002	B N	03-21-95	L4046-74
Nickel	6010	<0.012	0.012	0.040	U	03-23-95	L4046-74
Potassium	6010	<0.68	0.68	5.0	U	03-23-95	L4046-74
Selenium	6010	<0.09	0.09	0.30	U	03-23-95	L4046-74
Silver	6010	<0.008	0.008	0.010	U	03-23-95	L4046-74
Sodium	6010	0.50	0.03	5.0	B	03-23-95	L4046-74
Thallium	6010	<0.049	0.049	0.50	U	03-23-95	L4046-74
Vanadium	6010	<0.012	0.012	0.050	U	03-23-95	L4046-74
Zinc	6010	<0.011	0.011	0.020	U	03-23-95	L4046-74

Comments:

WHC-SD-C018H-TRP-016, Rev 0

METALS QC DATA SUMMARY
For Reagent Blank Analysis

LAL Batch ID(s): 315 wh

Constituent	Reporting Detection Limit (mg/L)	LAL Sample ID	Date Analyzed	Reagent Blank Result (mg/L)
Aluminum	0.20	pbW315wh	03-23-95	<0.20
Antimony	0.060	pbW315wh	03-23-95	<0.060
Arsenic	0.20	pbW315wh	03-23-95	<0.20
Barium	0.20	pbW315wh	03-23-95	<0.20
Beryllium	0.005	pbW315wh	03-23-95	<0.005
Cadmium	0.005	pbW315wh	03-23-95	<0.005
Calcium	5.0	pbW315wh	03-23-95	<5.0
Chromium (total)	0.010	pbW315wh	03-23-95	<0.010
Cobalt	0.050	pbW315wh	03-23-95	<0.050
Copper	0.025	pbW315wh	03-23-95	<0.025
Iron	0.10	pbW315wh	03-23-95	<0.10
Lead	0.10	pbW315wh	03-23-95	<0.10
Magnesium	5.0	pbW315wh	03-23-95	<5.0
Manganese	0.015	pbW315wh	03-23-95	<0.015
Mercury	0.0002	pbW315wh	03-21-95	<0.0002
Nickel	0.040	pbW315wh	03-23-95	<0.040
Potassium	5.0	pbW315wh	03-23-95	<5.0
Selenium	0.30	pbW315wh	03-23-95	<0.30
Silver	0.010	pbW315wh	03-23-95	<0.010
Sodium	5.0	pbW315wh	03-23-95	<5.0
Thallium	0.50	pbW315wh	03-23-95	<0.50
Vanadium	0.050	pbW315wh	03-23-95	<0.050
Zinc	0.020	pbW315wh	03-23-95	<0.020

COMMENTS:

METALS QC DATA SUMMARY

WHC-SD-C018H-TRP-016, Rev 0 For Duplicate Sample Analysis

LAL Batch ID(s): 315 wh

Constituent	Client Sample ID	LAL Sample ID	Date Analyzed	QC Sample Analyses			
				Sample Result (mg/L)	Duplicate Result (mg/L)	Relative Percent Difference (%)	Data Qualifier
Aluminum	BOF655	L4046-57	03-23-95	0.0912	0.11	b	
Antimony	BOF655	L4046-57	03-23-95	<0.05	<0.05	b	
Arsenic	BOF655	L4046-57	03-23-95	<0.05	<0.05	b	
Barium	BOF655	L4046-57	03-23-95	<0.03	<0.03	b	
Beryllium	BOF655	L4046-57	03-23-95	<0.001	<0.001	b	
Cadmium	BOF655	L4046-57	03-23-95	<0.004	<0.004	b	
Calcium	BOF655	L4046-57	03-23-95	0.5051	0.5086	b	
Chromium (total)	BOF655	L4046-57	03-23-95	<0.003	<0.003	b	
Cobalt	BOF655	L4046-57	03-23-95	<0.008	<0.008	b	
Copper	BOF655	L4046-57	03-23-95	0.0081	0.0055	b	
Iron	BOF655	L4046-57	03-23-95	0.1387	0.1091	24	
Lead	BOF655	L4046-57	03-23-95	<0.09	<0.09	b	
Magnesium	BOF655	L4046-57	03-23-95	0.095	0.097	b	
Manganese	BOF655	L4046-57	03-23-95	0.0077	0.0074	b	
Mercury	BOF655	L4046-57	03-21-95	0.00015	0.00017	b	
Nickel	BOF655	L4046-57	03-23-95	0.0168	0.0141	b	
Potassium	BOF655	L4046-57	03-23-95	<0.68	<0.68	b	
Selenium	BOF655	L4046-57	03-23-95	0.0942	<0.09	b	
Silver	BOF655	L4046-57	03-23-95	<0.008	<0.008	b	
Sodium	BOF655	L4046-57	03-23-95	0.5338	0.5629	b	
Thallium	BOF655	L4046-57	03-23-95	<0.049	<0.049	b	
Vanadium	BOF655	L4046-57	03-23-95	<0.012	<0.012	b	
Zinc	BOF655	L4046-57	03-23-95	<0.011	<0.011	b	

b - The RPD cannot be calculated because the sample and/or the duplicate concentration was below the Reporting Detection Limit.

COMMENTS:

METALS QC DATA SUMMARY
For Matrix Spike Sample Analysis

WHC-SD-C018H-TRP-016, Rev 0

LAL Batch ID(s): 315 wh

Constituent	Client Sample ID	LAL Sample ID	Date Analyzed	QC Sample Analyses				
				Matrix Spike Result (mg/L)	Sample Result (mg/L)	Spike Added (mg/L)	(%) Recovery	Data Qualifier
Aluminum	BOF655	L4046-57	03-23-95	2.144	0.0912	2.0	103	
Antimony	BOF655	L4046-57	03-23-95	2.116	<0.05	2.0	106	
Arsenic	BOF655	L4046-57	03-23-95	2.202	<0.05	2.0	110	
Barium	BOF655	L4046-57	03-23-95	2.075	<0.03	2.0	104	
Beryllium	BOF655	L4046-57	03-23-95	0.0473	<0.001	0.050	95	
Cadmium	BOF655	L4046-57	03-23-95	0.0503	<0.004	0.050	101	
Calcium	BOF655	L4046-57	03-23-95	105.5	0.5051	100	105	
Chromium (total)	BOF655	L4046-57	03-23-95	0.2147	<0.003	0.20	107	
Cobalt	BOF655	L4046-57	03-23-95	0.5293	<0.008	0.50	106	
Copper	BOF655	L4046-57	03-23-95	0.2644	0.0081	0.25	103	
Iron	BOF655	L4046-57	03-23-95	1.151	0.1387	1.0	101	
Lead	BOF655	L4046-57	03-23-95	0.5758	<0.09	0.50	115	
Magnesium	BOF655	L4046-57	03-23-95	51.27	0.095	50	102	
Manganese	BOF655	L4046-57	03-23-95	0.5368	0.0077	0.50	106	
Mercury	BOF655	L4046-57	03-21-95	0.0003543	0.00015	0.0010	20	N
Nickel	BOF655	L4046-57	03-23-95	0.5371	0.0168	0.50	104	
Potassium	BOF655	L4046-57	03-23-95	50.71	<0.68	50	101	
Selenium	BOF655	L4046-57	03-23-95	2.272	0.0942	2.0	109	
Silver	BOF655	L4046-57	03-23-95	0.0487	<0.008	0.050	97	
Sodium	BOF655	L4046-57	03-23-95	104.4	0.5338	100	104	
Thallium	BOF655	L4046-57	03-23-95	1.990	<0.049	2.0	100	
Vanadium	BOF655	L4046-57	03-23-95	0.5375	<0.012	0.50	108	
Zinc	BOF655	L4046-57	03-23-95	0.5380	<0.011	0.50	108	

COMMENTS:

9513388.1841

METALS QC DATA SUMMARY
For Laboratory Control Sample Analysis

WHC-SD-C018H-TRP-016, Rev 0

LAL Batch ID(s): 315 wh

Constituent	LAL Sample ID	Date Analyzed	QC Sample Analyses			
			LCS Result (mg/L)	Spike Added (mg/L)	(%) Recovery	Data Qualifier
Aluminum	LCSW315wh	03-23-95	2.033	2.0	102	
Antimony	LCSW315wh	03-23-95	2.046	2.0	102	
Arsenic	LCSW315wh	03-23-95	2.123	2.0	106	
Barium	LCSW315wh	03-23-95	2.025	2.0	101	
Beryllium	LCSW315wh	03-23-95	0.0468	0.050	94	
Cadmium	LCSW315wh	03-23-95	0.0489	0.050	98	
Calcium	LCSW315wh	03-23-95	104.3	100	104	
Chromium (total)	LCSW315wh	03-23-95	0.2088	0.20	104	
Cobalt	LCSW315wh	03-23-95	0.5256	0.50	105	
Copper	LCSW315wh	03-23-95	0.2537	0.25	101	
Iron	LCSW315wh	03-23-95	1.054	1.0	105	
Lead	LCSW315wh	03-23-95	0.5189	0.50	104	
Magnesium	LCSW315wh	03-23-95	50.54	50	101	
Manganese	LCSW315wh	03-23-95	0.5227	0.50	105	
Mercury	LCSW315wh	03-21-95	0.00112	0.0010	112	
Nickel	LCSW315wh	03-23-95	0.5230	0.50	105	
Potassium	LCSW315wh	03-23-95	49.82	50	100	
Selenium	LCSW315wh	03-23-95	2.153	2.0	108	
Silver	LCSW315wh	03-23-95	0.0504	0.050	101	
Sodium	LCSW315wh	03-23-95	101.6	100	102	
Thallium	LCSW315wh	03-23-95	1.961	2.0	98	
Vanadium	LCSW315wh	03-23-95	0.5264	0.50	105	
Zinc	LCSW315wh	03-23-95	0.5334	0.50	107	

COMMENTS:

B-0113

SUBCONTRACTED DATA

SOUTHWEST RESEARCH INSTITUTE
CLIENT: LOCKHEED
SDG NO.: L4046
VTSR: MARCH 17, 1995

CHAIN OF CUSTODY

Lockheed Analytical Laboratory

FIELD CHAIN-OF-CUSTODY FORM

Serial No: 12220
Date:
Page 2 of 3

Client Name and Address: Westinghouse Hanford

PWO/Contract No.: SAF 95-035

Sampling Site: LERF / 200E / Days 1-3

Analysis Required: Particle Size (ASTM D422)

Client Sample ID	Collection Date	Collection Time	Matrix Code*	Sample Type**	Field Preserved (Y or N)	No. and Volume of Containers	Particle Size (ASTM D422)	Comments	Laboratory Use Only: LAL Sample ID - Aliquot No.
BOF657	3-10-95	1015	W		N	2-L poly	X		
BOF660	3-10-95	1015					X		
BOF661	3-11-95	0902					X		
BOF664		0902					X		
BOF662		0910					X		
BOF665		0910					X		
BOF663		0922					X		
BOF666		0922					X		

Date Data Required: 10 days
Cooler No.:
Seal No.:

Relinquished by: (Signature) [signature] — Date 03-16-95 Time (am pm) 1530
Received By: (Signature) Fed Ex AB 4375652772 — Date 03-16-95 Time (am pm) 1530
Relinquished by: (Signature) — Date — Time (am pm)
Received By: (Signature) — Date — Time (am pm)
Relinquished by: (Signature) — Date — Time (am pm)

Received for Laboratory By: (Signature) R. P. Lear — Date 3/17/95 Time (am pm) 1425
Method of Shipment: Fed. Ex. — Airbill No. 4375652772
Cooler Survey (pass/fail): PASS → If FAIL do not open cooler; contact the Program Development Department and the Radiation Safety Officer IMMEDIATELY
Surveyed by: (Signature) R. P. Lear — Date 3/17/95 Time (am pm) 0850
Cooler Condition Upon Receipt at Laboratory: Seals Intact: (Y/N) Y — Blue Ice Adequate: (Y/N) Y — Blue Ice Solid: (Y/N) Y
Internal Cooler Temp. 3.9 °C; Samples in good condition: (Y/N) Y; Samples surveyed (pass/fail) P
Comments: Cooler temp. 3.9°C #5

***Sample Matrix Codes**
SW - Surface Water
GW - Ground Water
DW - Drinking Water
AR - Air
SL - Soil
SG - Sludge
SD - Sediment
WW - Waste Water
FI - Filter
BI - Biota
O - Other

****Sample Type Codes**
G - Grab
C - Composite
O - Other

Distribution: White Copy (Original) - LAL Document Control (Master File) — Yellow Copy - Client / Sample Collection Crew

WHC-SD-C018H-TRP-016, Rev 0 119

0116 8-

Lockheed Analytical Laboratory

FIELD CHAIN-OF-CUSTODY FORM

Serial No: 12219

Date:

Page 1 of 2

Client Name and Address: Westinghouse Hanford Company

PWO/Contract No.: SAF-95-035

Sampling Site: LERF/200E/~~Day #3~~ Days 1-3

Analysis Required: Particle Size (ASTM D422)

Client Sample ID	Collection Date	Collection Time	Matrix Code*	Sample Type**	Field Preserved (Y or N)	No. and Volume of Containers	Particle Size (ASTM D422)	Comments	Laboratory Use Only: LAL Sample ID - Aliquot No.
BOF670	3/12/95	858	W		N	2L poly	X	Summary	
BOF673		0858					X	Deliverable	
BOF671		0910					X	plus EDD	
BOF674		0910					X		
BOF672		0921					X	SDG# -	
BOF675		0921					X	L4046	
BOF655	3-10-95	0955					X		
BOF658		0955					X	priority	
BOF656		1003					X	TAT.	
BOF659		1003					X		

Date Data Required: 10 days

Cooler No.:

Seal No.:

Received for Laboratory By: (Signature) [illegible] Date 3/17/95 Time (am/pm) 09:15

Relinquished by: (Signature) [illegible] Date 03-16-95 Time (am pm) 1030

Method of Shipment: Fed Ex

Airbill No. 4375652772

Received By: (Signature) FED EX: 4375652772 Date 03-16-95 Time (am pm) 1030

Cooler Survey (pass/fail): PASS → If FAIL do not open cooler; contact the Program Development Department and the Radiation Safety Officer IMMEDIATELY

Relinquished by: (Signature) Date Time (am pm)

Surveyed by: (Signature) [illegible] Date 3/17/95 Time (am/pm) 1000

Received By: (Signature) Date Time (am pm)

Cooler Condition Upon Receipt at Laboratory:
Seals Intact: (Y/N) Y Blue Ice Adequate: (Y/N) Y Blue Ice Solid: (Y/N) Y

Relinquished by: (Signature) Date Time (am pm)

Internal Cooler Temp. 3.9 °C; Samples in good condition: (Y/N) Y; Samples surveyed (pass/fail) P

Comments: Cooler temp. 3.9°C #5

*Sample Matrix Codes

SW - Surface Water
GW - Ground Water
DW - Drinking Water
AR - Air
SL - Soil
SG - Sludge
SD - Sediment
WW - Waste Water
FI - Filter
BI - Biota
O - Other

**Sample Type Codes

G - Grab
C - Composite
O - Other

Distribution: White Copy (Original) - LAL Document Control (Master Files) Yellow Copy - Client / Sample Collection Crew

9513388.1842 - SD-CO1SH-TRP-016, Rev 0

120

B-
0117

WHC-SD-C018H-TRP-016, Rev 0.

121

Lockheed Analytical Services

SAMPLE BOTTLE SHIPMENT REQUEST AND PACKING SLIP

P.O. Number	LESAT Acct. No.	Shipped Via	BOL/ Airbill#		Originator
					[illegible]
Project WO Number	**Dept.#**	**Extension#**	**Control#**	**Ship Date**	**Authorized By**
976-2111C	5060	259			

Ship to:

Shipment Arrival Date: 3-16-95

Organization: Southwest Research Inst.

C/O: Jo Ann Boyd

Address: 6220 Culebra Rd.
San Antonio, TX 78228

Phone #: 210-522-2169 Fax#:

QA Material:

Coolers:_____ COC:_____ Bottle labels:_____ Custody Seals:_____ Blue Ice:_____

Quantity	Bottle Lot Number	Bottle Type	Preservative	Pres. Lot #	Matrix	Analyses
	Samples to be Sub-contracted					
	please call SRI with Airbill Number.					

B-0118

Cooler ID(s):_____

9513388.1844

WHC-SD-C018H-TRP-016, Rev 0

CLIENT: LOCKHEED
SDG: L4046

PARTICLE SIZE ANALYSIS

B - 011

Southwest Research Institute
Grain Size Report

010001

SwRI Sample ID:	51295	Customer:	LOCKHEED ENV. SYS. & TECH	Case:	LESAT/WESTHO
Work Order #:	6689	Client Sample ID:	BOF670	SDG:	L4046
Project:	01-6301-001	Sample Matrix:	WATER		

Total Sample Wt: 996.2

Sieve of +10

Sieve	Wt. Retained	% Retained	% Pass
3"	0	0.0	100.0
2"	0	0.0	100.0
1 1/2"	0	0.0	100.0
1"	0	0.0	100.0
3/4"	0	0.0	100.0
3/8"	0	0.0	100.0
#4	0	0.0	100.0
#10	0	0.0	100.0

Date Analyzed: 03/22/95

Sieve of -20/+200

Weight of Materials used in Hydrometer: 996.2

Sieve	Wt. Retained each Sieve	Yield	Wt. Retained	% Retained	% Pass
#20	0	0.00	0.00	0.0	100.0
#40	0	0.00	0.00	0.0	100.0
#60	0	0.00	0.00	0.0	100.0
#100	0	0.00	0.00	0.0	100.0
#200	0	0.00	0.00	0.0	100.0

Date Analyzed: 03/22/95

Specific Gravity: 1.05 Hydrometer ID: 152H-9

Temp.	Reading Time	Hydro. Reading	Hydro. Corr.	Corrected Hydro Reading	L	Diam (mm)	% Finer
24	2	0	0	0	16.3	0.069	0.000
24	5	0	0	0	16.3	0.044	0.000
24	15	0	0	0	16.3	0.025	0.000
24	30	0	0	0	16.3	0.018	0.000
24	60	0	0	0	16.3	0.013	0.000
24	250	0	0	0	16.3	0.006	0.000
24	1440	0	0	0	16.3	0.003	0.000

Date Analyzed: 03/22/95

WHC-SD-C018H-TRP-016, Rev 0

Southwest Research Institute
Grain Size Report

010002

SwRI Sample ID:	51297	Customer:	LOCKHEED ENV. SYS. & TECH	Case:	LESAT/WESTHO
Work Order #:	6689	Client Sample ID:	BOF673	SDG:	L4046
Project:	01-6301-001	Sample Matrix:	WATER		

Sieve of +10

Total Sample Wt: 995.5

Sieve	Wt. Retained	% Retained	% Pass
3"	0	0.0	100.0
2"	0	0.0	100.0
1 1/2"	0	0.0	100.0
1"	0	0.0	100.0
3/4"	0	0.0	100.0
3/8"	0	0.0	100.0
#4	0	0.0	100.0
#10	0	0.0	100.0

Date Analyzed: 03/22/95

Sieve of -20/+200

Weight of Materials used in Hydrometer: 995.5

Sieve	Wt. Retained each Sieve	Yield	Wt. Retained	% Retained	% Pass
#20	0	0.00	0.00	0.0	100.0
#40	0	0.00	0.00	0.0	100.0
#60	0	0.00	0.00	0.0	100.0
#100	0	0.00	0.00	0.0	100.0
#200	0	0.00	0.00	0.0	100.0

Date Analyzed: 03/22/95

Specific Gravity: 1.10 Hydrometer ID: 152H-9

Temp.	Reading Time	Hydro. Reading	Hydro. Corr.	Corrected Hydro Reading	L	Diam (mm)	% Finer
24	2	0	0	0	16.3	0.068	0.000
24	5	0	0	0	16.3	0.043	0.000
24	15	0	0	0	16.3	0.025	0.000
24	30	0	0	0	16.3	0.018	0.000
24	60	0	0	0	16.3	0.012	0.000
24	250	0	0	0	16.3	0.006	0.000
24	1440	0	0	0	16.3	0.003	0.000

Date Analyzed: 03/22/95

010003

WHC-SD-C018H-TRP-016, Rev 0

Southwest Research Institute
Grain Size Report

SwRI Sample ID: 51298
Work Order #: 6689
Project: 01-6301-001

Customer: LOCKHEED ENV. SYS. & TECH.
Client Sample ID: BOF671
Sample Matrix: WATER

Case: LESAT/WESTHO
SDG: L4046

Total Sample Wt: 994.8

Sieve of +10

Sieve	Wt. Retained	% Retained	% Pass
3"	0	0.0	100.0
2"	0	0.0	100.0
1 1/2"	0	0.0	100.0
1"	0	0.0	100.0
3/4"	0	0.0	100.0
3/8"	0	0.0	100.0
#4	0	0.0	100.0
#10	0	0.0	100.0

Date Analyzed: 03/22/95

Sieve of -20/+200

Weight of Materials used in Hydrometer: 994.8

Sieve	Wt. Retained each Sieve	Yield	Wt. Retained	% Retained	% Pass
#20	0	0.00	0.00	0.0	100.0
#40	0	0.00	0.00	0.0	100.0
#60	0	0.00	0.00	0.0	100.0
#100	0	0.00	0.00	0.0	100.0
#200	0	0.00	0.00	0.0	100.0

Date Analyzed: 03/22/95

Specific Gravity: 1.07 Hydrometer ID: 152H-9

Temp.	Reading Time	Hydro. Reading	Hydro. Corr.	Corrected Hydro Reading	L	Diam (mm)	% Finer
24	2	0	0	0	16.3	0.069	0.000
24	5	0	0	0	16.3	0.044	0.000
24	15	0	0	0	16.3	0.025	0.000
24	30	0	0	0	16.3	0.018	0.000
24	60	0	0	0	16.3	0.013	0.000
24	250	0	0	0	16.3	0.006	0.000
24	1440	0	0	0	16.3	0.003	0.000

Date Analyzed: 03/22/95

B-0122

WHC-SD-C018H-TRP-016, Rev 0

Southwest Research Institute
Grain Size Report

SwRI Sample ID:	51299	Customer:	LOCKHEED ENV. SYS. & TECH	Test:	LESAT/WESTHO
Work Order #:	6689	Client Sample ID:	BOF674	SDG:	L4046
Project:	01-6301-001	Sample Matrix:	WATER		

Sieve of +10

Total Sample Wt: 999.1

Sieve	Wt. Retained	% Retained	% Pass
3"	0	0.0	100.0
2"	0	0.0	100.0
1 1/2"	0	0.0	100.0
1"	0	0.0	100.0
3/4"	0	0.0	100.0
3/8"	0	0.0	100.0
#4	0	0.0	100.0
#10	0	0.0	100.0

Date Analyzed: 03/22/95

Sieve of -20/+200

Weight of Materials used in Hydrometer: 999.1

Sieve	Wt. Retained each Sieve	Yield	Wt. Retained	% Retained	% Pass
#20	0	0.00	0.00	0.0	100.0
#40	0	0.00	0.00	0.0	100.0
#60	0	0.00	0.00	0.0	100.0
#100	0	0.00	0.00	0.0	100.0
#200	0	0.00	0.00	0.0	100.0

Date Analyzed: 03/22/95

Specific Gravity: 1.10 Hydrometer ID: 152H-9

Temp.	Reading Time	Hydro. Reading	Hydro. Corr.	Corrected Hydro Reading	L	Diam (mm)	% Finer
24	2	0	0	0	16.3	0.068	0.000
24	5	0	0	0	16.3	0.043	0.000
24	15	0	0	0	16.3	0.025	0.000
24	30	0	0	0	16.3	0.018	0.000
24	60	0	0	0	16.3	0.012	0.000
24	250	0	0	0	16.3	0.006	0.000
24	1440	0	0	0	16.3	0.003	0.000

Date Analyzed: 03/22/95

Southwest Research Institute

Grain Size Report

010005

SwRI Sample ID:	51300	Customer:	LOCKHEED ENV. SYS. & TECH	Test:	LESAT/WESTHO
Work Order #:	6689	Client Sample ID:	BOF672	SDG:	L4046
Project:	01-6301-001	Sample Matrix:	WATER		

Total Sample Wt: 991.2

Sieve of +10

Sieve	Wt. Retained	% Retained	% Pass
3"	0	0.0	100.0
2"	0	0.0	100.0
1 1/2"	0	0.0	100.0
1"	0	0.0	100.0
3/4"	0	0.0	100.0
3/8"	0	0.0	100.0
#4	0	0.0	100.0
#10	0	0.0	100.0

Date Analyzed: 03/22/95

Sieve of -20/+200

Weight of Materials used in Hydrometer: 991.2

Sieve	Wt. Retained each Sieve	Yield	Wt. Retained	% Retained	% Pass
#20	0	0.00	0.00	0.0	100.0
#40	0	0.00	0.00	0.0	100.0
#60	0	0.00	0.00	0.0	100.0
#100	0	0.00	0.00	0.0	100.0
#200	0	0.00	0.00	0.0	100.0

Date Analyzed: 03/22/95

Specific Gravity: 1.07 Hydrometer ID: 152H-9

Temp.	Reading Time	Hydro. Reading	Hydro. Corr.	Corrected Hydro Reading	L	Diam (mm)	% Finer
24	2	0	0	0	16.3	0.069	0.000
24	5	0	0	0	16.3	0.044	0.000
24	15	0	0	0	16.3	0.025	0.000
24	30	0	0	0	16.3	0.018	0.000
24	60	0	0	0	16.3	0.013	0.000
24	250	0	0	0	16.3	0.006	0.000
24	1440	0	0	0	16.3	0.003	0.000

Date Analyzed: 03/22/95

Southwest Research Institute
Grain Size Report

SwRI Sample ID: 51301
Work Order #: 6689
Project: 01-6301-001

Customer: LOCKHEED ENV. SYS. & TECH.
Client Sample ID: BOF675
Sample Matrix: WATER

Case: LESAT/WESTHO
SDG: L4046

Total Sample Wt: 996.5

Sieve of +10

Sieve	Wt. Retained	% Retained	% Pass
3"	0	0.0	100.0
2"	0	0.0	100.0
1 1/2"	0	0.0	100.0
1"	0	0.0	100.0
3/4"	0	0.0	100.0
3/8"	0	0.0	100.0
#4	0	0.0	100.0
#10	0	0.0	100.0

Date Analyzed: 03/22/95

Sieve of -20/+200

Weight of Materials used in Hydrometer: 996.5

Sieve	Wt. Retained each Sieve	Yield	Wt. Retained	% Retained	% Pass
#20	0	0.00	0.00	0.0	100.0
#40	0	0.00	0.00	0.0	100.0
#60	0	0.00	0.00	0.0	100.0
#100	0	0.00	0.00	0.0	100.0
#200	0	0.00	0.00	0.0	100.0

Date Analyzed: 03/22/95

Specific Gravity: 1.07 Hydrometer ID: 152H-9

Temp.	Reading Time	Hydro. Reading	Hydro. Corr.	Corrected Hydro Reading	L	Diam (mm)	% Finer
24	2	0	0	0	16.3	0.069	0.000
24	5	0	0	0	16.3	0.044	0.000
24	15	0	0	0	16.3	0.025	0.000
24	30	0	0	0	16.3	0.018	0.000
24	60	0	0	0	16.3	0.013	0.000
24	250	0	0	0	16.3	0.006	0.000
24	1440	0	0	0	16.3	0.003	0.000

Date Analyzed: 03/22/95

Southwest Research Institute

Grain Size Report

WHC-SD-C018H-TRP-016, Rev 0

SwRI Sample ID:	51302	Customer:	LOCKHEED ENV. SYS. & TECH.	Test:	LESAT/WESTHO
Work Order #:	6689	Client Sample ID:	BOF655	SDG:	L4046
Project:	01-6301-001	Sample Matrix:	WATER		

Total Sample Wt: 995.8

Sieve of +10

Sieve	Wt. Retained	% Retained	% Pass
3"	0	0.0	100.0
2"	0	0.0	100.0
1 1/2"	0	0.0	100.0
1"	0	0.0	100.0
3/4"	0	0.0	100.0
3/8"	0	0.0	100.0
#4	0	0.0	100.0
#10	0	0.0	100.0

Date Analyzed: 03/22/95

Sieve of -20/+200

Weight of Materials used in Hydrometer: 995.8

Sieve	Wt. Retained each Sieve	Yield	Wt. Retained	% Retained	% Pass
#20	0	0.00	0.00	0.0	100.0
#40	0	0.00	0.00	0.0	100.0
#60	0	0.00	0.00	0.0	100.0
#100	0	0.00	0.00	0.0	100.0
#200	0	0.00	0.00	0.0	100.0

Date Analyzed: 03/22/95

Specific Gravity: 1.05 Hydrometer ID: 152H-9

Temp.	Reading Time	Hydro. Reading	Hydro. Corr.	Corrected Hydro Reading	L	Diam (mm)	% Finer
24	2	0	0	0	16.3	0.069	0.000
24	5	0	0	0	16.3	0.044	0.000
24	15	0	0	0	16.3	0.025	0.000
24	30	0	0	0	16.3	0.018	0.000
24	60	0	0	0	16.3	0.013	0.000
24	250	0	0	0	16.3	0.006	0.000
24	1440	0	0	0	16.3	0.003	0.000

Date Analyzed:

Southwest Research Institute
Grain Size Report

WHC-SD-C018H-TRP-016, Rev 0

SwRI Sample ID:	51303	Customer:	LOCKHEED ENV. SYS. & TECH	Base:	LESAT/WESTHO
Work Order #:	6689	Client Sample ID:	BOF658	SDG:	L4046
Project:	01-6301-001	Sample Matrix:	WATER		

Total Sample Wt: 997.2

Sieve of +10

Sieve	Wt. Retained	% Retained	% Pass
3"	0	0.0	100.0
2"	0	0.0	100.0
1 1/2"	0	0.0	100.0
1"	0	0.0	100.0
3/4"	0	0.0	100.0
3/8"	0	0.0	100.0
#4	0	0.0	100.0
#10	0	0.0	100.0

Date Analyzed: 03/22/95

Sieve of -20/+200

Weight of Materials used in Hydrometer: 997.2

Sieve	Wt. Retained each Sieve	Yield	Wt. Retained	% Retained	% Pass
#20	0	0.00	0.00	0.0	100.0
#40	0	0.00	0.00	0.0	100.0
#60	0	0.00	0.00	0.0	100.0
#100	0	0.00	0.00	0.0	100.0
#200	0	0.00	0.00	0.0	100.0

Date Analyzed: 03/22/95

Specific Gravity: 1.05 Hydrometer ID: 152H-9

Temp.	Reading Time	Hydro. Reading	Hydro. Corr.	Corrected Hydro Reading	L	Diam (mm)	% Finer
24	2	0	0	0	16.3	0.069	0.000
24	5	0	0	0	16.3	0.044	0.000
24	15	0	0	0	16.3	0.025	0.000
24	30	0	0	0	16.3	0.018	0.000
24	60	0	0	0	16.3	0.013	0.000
24	250	0	0	0	16.3	0.006	0.000
24	1440	0	0	0	16.3	0.003	0.000

Date Analyzed: 03/22/95

Southwest Research Institute
Grain Size Report

010009

SwRI Sample ID:	51305	Customer:	LOCKHEED ENV. SYS. & TECH.	Task:	LESAT/WESTHO
Work Order #:	6689	Client Sample ID:	BOF656	SDG:	L4046
Project:	01-6301-001	Sample Matrix:	WATER		

Sieve of +10

Total Sample Wt: 996.2

Sieve	Wt. Retained	% Retained	% Pass
3"	0	0.0	100.0
2"	0	0.0	100.0
1 1/2"	0	0.0	100.0
1"	0	0.0	100.0
3/4"	0	0.0	100.0
3/8"	0	0.0	100.0
#4	0	0.0	100.0
#10	0	0.0	100.0

Date Analyzed: 03/22/95

Sieve of -20/+200

Weight of Materials used in Hydrometer: 996.2

Sieve	Wt. Retained each Sieve	Yield	Wt. Retained	% Retained	% Pass
#20	0	0.00	0.00	0.0	100.0
#40	0	0.00	0.00	0.0	100.0
#60	0	0.00	0.00	0.0	100.0
#100	0	0.00	0.00	0.0	100.0
#200	0	0.00	0.00	0.0	100.0

Date Analyzed: 03/22/95

Specific Gravity: 1.05 Hydrometer ID: 152H-9

Temp.	Reading Time	Hydro. Reading	Hydro. Corr.	Corrected Hydro Reading	L	Diam (mm)	% Finer
24	2	0	0	0	16.3	0.069	0.000
24	5	0	0	0	16.3	0.044	0.000
24	15	0	0	0	16.3	0.025	0.000
24	30	0	0	0	16.3	0.018	0.000
24	60	0	0	0	16.3	0.013	0.000
24	250	0	0	0	16.3	0.006	0.000
24	1440	0	0	0	16.3	0.003	0.000

Date Analyzed: 03/22/95

Southwest Research Institute
Grain Size Report

SwRI Sample ID:	51307	Customer:	LOCKHEED ENV. SYS. & TECH	Case:	LESAT/WESTHO
Work Order #:	6689	Client Sample ID:	BOF659	SDG:	L4046
Project:	01-6301-001	Sample Matrix:	WATER		

Sieve of +10

Total Sample Wt: 995.9

Sieve	Wt. Retained	% Retained	% Pass
3"	0	0.0	100.0
2"	0	0.0	100.0
1 1/2"	0	0.0	100.0
1"	0	0.0	100.0
3/4"	0	0.0	100.0
3/8"	0	0.0	100.0
#4	0	0.0	100.0
#10	0	0.0	100.0

Date Analyzed: 03/23/95

Sieve of -20/+200

Weight of Materials used in Hydrometer: 995.9

Sieve	Wt. Retained each Sieve	Yield	Wt. Retained	% Retained	% Pass
#20	0	0.00	0.00	0.0	100.0
#40	0	0.00	0.00	0.0	100.0
#60	0	0.00	0.00	0.0	100.0
#100	0	0.00	0.00	0.0	100.0
#200	0	0.00	0.00	0.0	100.0

Date Analyzed: 03/23/95

Specific Gravity: 1.05 Hydrometer ID: 152H-9

Temp.	Reading Time	Hydro. Reading	Hydro. Corr.	Corrected Hydro Reading	L	Diam (mm)	% Finer
24	2	0	0	0	16.3	0.069	0.000
24	5	0	0	0	16.3	0.044	0.000
24	15	0	0	0	16.3	0.025	0.000
24	30	0	0	0	16.3	0.018	0.000
24	60	0	0	0	16.3	0.013	0.000
24	250	0	0	0	16.3	0.006	0.000
24	1440	0	0	0	16.3	0.003	0.000

Date Analyzed: 03/23/95

WHC-SD-C018H-TRP-016, Rev 0

Southwest Research Institute
Grain Size Report

010011

SwRI Sample ID:	51308	Customer:	LOCKHEED ENV. SYS. & TECH.	Case:	LESAT/WESTHO
Work Order #:	6689	Client Sample ID:	BOF657	SDG:	L4046
Project:	01-6301-001	Sample Matrix:	WATER		

Total Sample Wt: 997.0

Sieve of +10

Sieve	Wt. Retained	% Retained	% Pass
3"	0	0.0	100.0
2"	0	0.0	100.0
1 1/2"	0	0.0	100.0
1"	0	0.0	100.0
3/4"	0	0.0	100.0
3/8"	0	0.0	100.0
#4	0	0.0	100.0
#10	0	0.0	100.0

Date Analyzed: 03/23/95

Sieve of -20/+200

Weight of Materials used in Hydrometer: 997.0

Sieve	Wt. Retained each Sieve	Yield	Wt. Retained	% Retained	% Pass
#20	0	0.00	0.00	0.0	100.0
#40	0	0.00	0.00	0.0	100.0
#60	0	0.00	0.00	0.0	100.0
#100	0	0.00	0.00	0.0	100.0
#200	0	0.00	0.00	0.0	100.0

Date Analyzed: 00/23/95

Specific Gravity: 1.07 Hydrometer ID: 152H-9

Temp.	Reading Time	Hydro. Reading	Hydro. Corr.	Corrected Hydro Reading	L	Diam (mm)	% Finer
24	2	0	0	0	16.3	0.069	0.000
24	5	0	0	0	16.3	0.044	0.000
24	15	0	0	0	16.3	0.025	0.000
24	30	0	0	0	16.3	0.018	0.000
24	60	0	0	0	16.3	0.013	0.000
24	250	0	0	0	16.3	0.006	0.000
24	1440	0	0	0	16.3	0.003	0.000

Date Analyzed: 03/23/95

B-0130

9513388.1850

WHC-SD-C018H-TRP-016, Rev 0

Southwest Research Institute
Grain Size Report

010012

SwRI Sample ID:	51309	Customer:	LOCKHEED ENV. SYS. & TECH.	Case:	LESAT/WESTHO
Work Order #:	6689	Client Sample ID:	BOF660	SDG:	L4046
Project:	01-6301-001	Sample Matrix:	WATER		

Total Sample Wt: 997.4

Sieve of +10

Sieve	Wt. Retained	% Retained	% Pass
3"	0	0.0	100.0
2"	0	0.0	100.0
1 1/2"	0	0.0	100.0
1"	0	0.0	100.0
3/4"	0	0.0	100.0
3/8"	0	0.0	100.0
#4	0	0.0	100.0
#10	0	0.0	100.0

Date Analyzed: 03/23/95

Sieve of -20/+200

Weight of Materials used in Hydrometer: 997.4

Sieve	Wt. Retained each Sieve	Yield	Wt. Retained	% Retained	% Pass
#20	0	0.00	0.00	0.0	100.0
#40	0	0.00	0.00	0.0	100.0
#60	0	0.00	0.00	0.0	100.0
#100	0	0.00	0.00	0.0	100.0
#200	0	0.00	0.00	0.0	100.0

Date Analyzed: 03/23/95

Specific Gravity: 1.05 Hydrometer ID: 152H-9

Temp.	Reading Time	Hydro. Reading	Hydro. Corr.	Corrected Hydro Reading	L	Diam (mm)	% Finer
24	2	0	0	0	16.3	0.069	0.000
24	5	0	0	0	16.3	0.044	0.000
24	15	0	0	0	16.3	0.025	0.000
24	30	0	0	0	16.3	0.018	0.000
24	60	0	0	0	16.3	0.013	0.000
24	250	0	0	0	16.3	0.006	0.000
24	1440	0	0	0	16.3	0.003	0.000

Date Analyzed: 03/23/95

B-0131

Southwest Research Institute
Grain Size Report

SwRI Sample ID:	51310	Customer:	LOCKHEED ENV. SYS. & TECH.	Case:	LESAT/WESTHO
Work Order #:	6689	Client Sample ID:	BOF661	SDG:	L4046
Project:	01-6301-001	Sample Matrix:	WATER		

Sieve of +10

Total Sample Wt: 992.1

Sieve	Wt. Retained	% Retained	% Pass
3"	0	0.0	100.0
2"	0	0.0	100.0
1 1/2"	0	0.0	100.0
1"	0	0.0	100.0
3/4"	0	0.0	100.0
3/8"	0	0.0	100.0
#4	0	0.0	100.0
#10	0	0.0	100.0

Date Analyzed: 03/23/95

Sieve of -20/+200

Weight of Materials used in Hydrometer: 992.1

Sieve	Wt. Retained each Sieve	Yield	Wt. Retained	% Retained	% Pass
#20	0	0.00	0.00	0.0	100.0
#40	0	0.00	0.00	0.0	100.0
#60	0	0.00	0.00	0.0	100.0
#100	0	0.00	0.00	0.0	100.0
#200	0	0.00	0.00	0.0	100.0

Date Analyzed: 03/23/95

Specific Gravity: 1.05 Hydrometer ID: 152H-9

Temp.	Reading Time	Hydro. Reading	Hydro. Corr.	Corrected Hydro Reading	L	Diam (mm)	% Finer
24	2	0	0	0	16.3	0.069	0.000
24	5	0	0	0	16.3	0.044	0.000
24	15	0	0	0	16.3	0.025	0.000
24	30	0	0	0	16.3	0.018	0.000
24	60	0	0	0	16.3	0.013	0.000
24	250	0	0	0	16.3	0.006	0.000
24	1440	0	0	0	16.3	0.003	0.000

Date Analyzed: 03/23/95

WHC-SD-C018H-TRP-016, Rev 0

Southwest Research Institute
Grain Size Report

SwRI Sample ID: 51311
Work Order #: 6689
Project: 01-6301-001

Customer: LOCKHEED ENV. SYS. & TECH.
Client Sample ID: BOF664.
Sample Matrix: WATER

Task: LESAT/WESTHO
SDG: L4046

Sieve of +10

Total Sample Wt: 997.1

Sieve	Wt. Retained	% Retained	% Pass
3"	0	0.0	100.0
2"	0	0.0	100.0
1 1/2"	0	0.0	100.0
1"	0	0.0	100.0
3/4"	0	0.0	100.0
3/8"	0	0.0	100.0
#4	0	0.0	100.0
#10	0	0.0	100.0

Date Analyzed: 03/23/95

Sieve of -20/+200

Weight of Materials used in Hydrometer: 997.1

Sieve	Wt. Retained each Sieve	Yield	Wt. Retained	% Retained	% Pass
#20	0	0.00	0.00	0.0	100.0
#40	0	0.00	0.00	0.0	100.0
#60	0	0.00	0.00	0.0	100.0
#100	0	0.00	0.00	0.0	100.0
#200	0	0.00	0.00	0.0	100.0

Date Analyzed: 03/23/95

Specific Gravity: 1.12 Hydrometer ID: 152H-9

Temp.	Reading Time	Hydro. Reading	Hydro. Corr.	Corrected Hydro Reading	L	Diam (mm)	% Finer
24	2	0	0	0	16.3	0.068	0.000
24	5	0	0	0	16.3	0.043	0.000
24	15	0	0	0	16.3	0.025	0.000
24	30	0	0	0	16.3	0.018	0.000
24	60	0	0	0	16.3	0.012	0.000
24	250	0	0	0	16.3	0.006	0.000
24	1440	0	0	0	16.3	0.003	0.000

Date Analyzed: 03/23/95

Southwest Research Institute
Grain Size Report

010015

SwRI Sample ID:	51312	Customer:	LOCKHEED ENV. SYS. & TECH	Case:	LESAT/WESTHO
Work Order #:	6689	Client Sample ID:	BOF662	SDG:	L4046
Project:	01-6301-001	Sample Matrix:	WATER		

Total Sample Wt: 998.3

Sieve of +10

Sieve	Wt. Retained	% Retained	% Pass
3"	0	0.0	100.0
2"	0	0.0	100.0
1 1/2"	0	0.0	100.0
1"	0	0.0	100.0
3/4"	0	0.0	100.0
3/8"	0	0.0	100.0
#4	0	0.0	100.0
#10	0	0.0	100.0

Date Analyzed: 03/23/95

Sieve of -20/+200

Weight of Materials used in Hydrometer: 998.3

Sieve	Wt. Retained each Sieve	Yield	Wt. Retained	% Retained	% Pass
#20	0	0.00	0.00	0.0	100.0
#40	0	0.00	0.00	0.0	100.0
#60	0	0.00	0.00	0.0	100.0
#100	0	0.00	0.00	0.0	100.0
#200	0	0.00	0.00	0.0	100.0

Date Analyzed: 03/23/95

Specific Gravity: 1.07 Hydrometer ID: 152H-9

Temp.	Reading Time	Hydro. Reading	Hydro. Corr.	Corrected Hydro Reading	L	Diam (mm)	% Finer
24	2	0	0	0	16.3	0.069	0.000
24	5	0	0	0	16.3	0.044	0.000
24	15	0	0	0	16.3	0.025	0.000
24	30	0	0	0	16.3	0.018	0.000
24	60	0	0	0	16.3	0.013	0.000
24	250	0	0	0	16.3	0.006	0.000
24	1440	0	0	0	16.3	0.003	0.000

Date Analyzed: 03/23/95

9513388.1852

WHC-SD-C018H-TRP-016, Rev 0

Southwest Research Institute
Grain Size Report

010016

SwRI Sample ID:	51313	Customer:	LOCKHEED ENV. SYS. & TECH	Case:	LESAT/WESTHC
Work Order #:	6689	Client Sample ID:	BOF665	SDG:	L4046
Project:	01-6301-001	Sample Matrix:	WATER		

Sieve of +10

Total Sample Wt: 901.7

Sieve	Wt. Retained	% Retained	% Pass
3"	0	0.0	100.0
2"	0	0.0	100.0
1 1/2"	0	0.0	100.0
1"	0	0.0	100.0
3/4"	0	0.0	100.0
3/8"	0	0.0	100.0
#4	0	0.0	100.0
#10	0	0.0	100.0

Date Analyzed: 03/23/95

Sieve of -20/+200

Weight of Materials used in Hydrometer: 901.7

Sieve	Wt. Retained each Sieve	Yield	Wt. Retained	% Retained	% Pass
#20	0	0.00	0.00	0.0	100.0
#40	0	0.00	0.00	0.0	100.0
#60	0	0.00	0.00	0.0	100.0
#100	0	0.00	0.00	0.0	100.0
#200	0	0.00	0.00	0.0	100.0

Date Analyzed: 03/23/95

Specific Gravity: 1.10 Hydrometer ID: 152H-9

Temp.	Reading Time	Hydro. Reading	Hydro. Corr.	Corrected Hydro Reading	L	Diam (mm)	% Finer
24	2	0	0	0	16.3	0.068	0.000
24	5	0	0	0	16.3	0.043	0.000
24	15	0	0	0	16.3	0.025	0.000
24	30	0	0	0	16.3	0.018	0.000
24	60	0	0	0	16.3	0.012	0.000
24	250	0	0	0	16.3	0.006	0.000
24	1440	0	0	0	16.3	0.003	0.000

Date Analyzed: 03/23/95

B-0135

010017

WHC-SD-C018H-TRP-016, Rev 0

Southwest Research Institute
Grain Size Report

SwRI Sample ID: 51314
Work Order #: 6689
Project: 01-6301-001

Customer: LOCKHEED ENV. SYS. & TECH.
Client Sample ID: BOF663
Sample Matrix: WATER

Case: LESAT/WESTHO
SDG: L4046

Total Sample Wt: 997.3

Sieve of +10

Sieve	Wt. Retained	% Retained	% Pass
3"	0	0.0	100.0
2"	0	0.0	100.0
1 1/2"	0	0.0	100.0
1"	0	0.0	100.0
3/4"	0	0.0	100.0
3/8"	0	0.0	100.0
#4	0	0.0	100.0
#10	0	0.0	100.0

Date Analyzed: 03/23/95

Sieve of -20/+200

Weight of Materials used in Hydrometer: 997.3

Sieve	Wt. Retained each Sieve	Yield	Wt. Retained	% Retained	% Pass
#20	0	0.00	0.00	0.0	100.0
#40	0	0.00	0.00	0.0	100.0
#60	0	0.00	0.00	0.0	100.0
#100	0	0.00	0.00	0.0	100.0
#200	0	0.00	0.00	0.0	100.0

Date Analyzed: 03/23/93

Specific Gravity: 1.07 Hydrometer ID: 152H-9

Temp.	Reading Time	Hydro. Reading	Hydro. Corr.	Corrected Hydro Reading	L	Diam (mm)	% Finer
24	2	0	0	0	16.3	0.069	0.000
24	5	0	0	0	16.3	0.044	0.000
24	15	0	0	0	16.3	0.025	0.000
24	30	0	0	0	16.3	0.018	0.000
24	60	0	0	0	16.3	0.013	0.000
24	250	0	0	0	16.3	0.006	0.000
24	1440	0	0	0	16.3	0.003	0.000

Date Analyzed: 03/23/95

B-0136

9513388.1853

WHC-SD-C018H-TRP-016, Rev 0

Southwest Research Institute
Grain Size Report

010018

SwRI Sample ID:	51315	Customer:	LOCKHEED ENV. SYS. & TECH	Case:	LESAT/WESTHO
Work Order #:	6689	Client Sample ID:	BOF666	SDG:	L4046
Project:	01-6301-001	Sample Matrix:	WATER		

Sieve of +10

Total Sample Wt: 999.2

Sieve	Wt. Retained	% Retained	% Pass
3"	0	0.0	100.0
2"	0	0.0	100.0
1 1/2"	0	0.0	100.0
1"	0	0.0	100.0
3/4"	0	0.0	100.0
3/8"	0	0.0	100.0
#4	0	0.0	100.0
#10	0	0.0	100.0

Date Analyzed: 03/23/95

Sieve of -20/+200

Weight of Materials used in Hydrometer: 999.2

Sieve	Wt. Retained each Sieve	Yield	Wt. Retained	% Retained	% Pass
#20	0	0.00	0.00	0.0	100.0
#40	0	0.00	0.00	0.0	100.0
#60	0	0.00	0.00	0.0	100.0
#100	0	0.00	0.00	0.0	100.0
#200	0	0.00	0.00	0.0	100.0

Date Analyzed: 03/23/95

Specific Gravity: 1.07 Hydrometer ID: 152H-9

Temp.	Reading Time	Hydro. Reading	Hydro. Corr.	Corrected Hydro Reading	L	Diam (mm)	% Finer
24	2	0	0	0	16.3	0.069	0.000
24	5	0	0	0	16.3	0.044	0.000
24	15	0	0	0	16.3	0.025	0.000
24	30	0	0	0	16.3	0.018	0.000
24	60	0	0	0	16.3	0.013	0.000
24	250	0	0	0	16.3	0.006	0.000
24	1440	0	0	0	16.3	0.003	0.000

Date Analyzed: 03/23/95

B-0137

WHC-SD-C018H-TRP-016, Rev 0

CLIENT: LOCKHEED
SDG: L4046

RAW DATA

B-0138

Lockheed Env. Sys & Tech
LESAT/WESTHO

PROJECT NO. 01-6301-001
BOOK NO. SG I-92

Specific Gravity of water

Work continued from Page 10.0.6687

010019

Sample ID	Flask No.	Flask + Sample	Temp °C	(A) Sample Wt.	(B) Correction K Factor	(C) Sample Wt X correction factor	(D) Specific Gravity at 20°C
BLK #I	5	164.32	25	99.67	0.8904	88.75	1.000
BOF 670	5	164.30	23	99.65	.9325	92.92	1.05
673	7	165.05	21	99.69	.9779	97.49	1.10
671	7	165.08	22	99.72	.9548	95.21	1.07
674	5	164.49	21	99.84	.9779	97.63	1.10
672	5	164.40	22	99.75	.9548	95.24	1.07
675	7	165.06	22	99.70	.9548	95.19	1.07
655	5	164.36	23	99.71	.9325	92.98	1.05
658	7	164.97	23	99.61	↓	92.87	1.05
656	7	165.06	23	99.70	↓	92.97	1.05
659	5	164.37	23	99.72	↓	92.99	1.05
657	5	164.41	22	99.76	.9548	95.25	1.07
660	7	165.01	23	99.65	.9325	92.92	1.05
661	5	164.33	23	99.68	↓	92.95	1.05
664	7	165.01	21	99.65	.9779	97.44	1.12
662	7	165.06	22	99.70	.9548	95.19	1.07
665	5	164.46	21	99.81	.9779	97.60	1.10
663	5	164.43	22	99.78	.9548	95.27	1.07
666	7	165.04	22	99.68	↓	95.17	1.07
BLK #II	7	164.91	25	99.55	0.8904	88.64	1.000

Flask #5 WEIGHT 64.65

Flask #7 WEIGHT 65.36

A = Sample Wt. = Flask ~~w/sam~~ with Sample − wt. of flask

B = Correction factor from the ~~table~~ 3/22/95 table

C = Correction factor X Sample Wt.

D = Specific Gravity

= C / BLK I or BLK II

Reviewed By: [signature]
KEVIN VILLALOBOS
Date: 3-24-95
SwRI EWG LABS

Work continued to Page

DATE 3-22-95

DATE B-0139

WHC-SD-C018H-TRP-016, Rev 0

SDG: L4046

TITLE Lockheed Env. Sys & Tech/LESAT/WESTHO

PROJECT NO. 01-6301-001

BOOK NO. GS/BD I-94

PARTICLE SIZE BY ASTM D422 MODIFY & FOR WATER

Work continued from Page

W.O. 6685

010020

Sys ID		51295	51297	51298	51299	51300	51301	51302
CUST ID		BOF670	BOF673	BOF671	BOF674	BOF672	BOF675	BOF655
Total Sample Wt. (g)		996.2	995.5	994.8	999.1	991.2	996.5	995.8
Wt. Sample used for hydrometer (g)		996.2	995.5	994.8	999.1	991.2	996.5	995.8
Hydrometer No.		152H-9	152H-9	152H-9	152H-9	152H-9	152H-9	152H-9
Balance No.								
Hydrometer								
Temp.	Time	(8:20) BLK Reading	(8:21)	(8:24)	(8:26)	(8:29)	(8:33)	(8:35)	(8:40)
24.0	2	Ø	Ø	Ø	Ø	Ø	Ø	Ø	Ø
24	5	Ø	Ø	Ø	Ø	Ø	Ø	Ø	Ø
24	15	Ø	Ø	Ø	Ø	Ø	Ø	Ø	Ø
24	30	Ø	Ø	Ø	Ø	Ø	Ø	Ø	Ø
24	60	Ø	Ø	Ø	Ø	Ø	Ø	Ø	Ø
24	250	Ø	Ø	Ø	Ø	Ø	Ø	Ø	Ø
24	1440	Ø	Ø	Ø	Ø	Ø	Ø	Ø	Ø

Sys ID		51303	51305	
CUST ID		BOF658	BOF656	
total Sample Wt		997.2	996.2	
Wt. Sample used for hydrometer		997.2	996.2	
Hydrometer No		152H-9	152H-9	
Balance No.				
Temp	Time	(8:20) BLK Reading	(8:44)	(8:46)
24	2	Ø	Ø	Ø
24	5	Ø	Ø	Ø
24	15	Ø	Ø	Ø
24	30	Ø	Ø	Ø
24	60	Ø	Ø	Ø
24	250	Ø	Ø	Ø
24	1440	Ø	Ø	Ø

Reviewed By: [signature]
KEVIN VILLALOBOS
Date: 3-24-95
SwRI EWG LABS

SCIENTIFIC BINDERY PRODUCTIONS CHICAGO 60605 MADE IN USA

Work continued to Page

SIGNATURE [signature] DATE 3-22-95

DISCLOSED TO AND UNDERSTOOD BY DATE WITNESS DATE

B-0140

1/6

TITLE LOCKHEED ENV. SYS & TECH LEGAT/WESTHO SOG L4046
WHC-SP-C01814-TRP-016, REV 0

PROJECT NO. 01-6301-001
BOOK NO. BS/30 I-94

PARTICLE SIZE BY ASTM D 422 MOD. #4 FOR WATER

Work continued from Page U.O. 6689

#10021

Cust ID		BOF659	BOF657	BOF660	BOF661	BOF668	BOF662	BOF665	BOF663	BOF66
Sys ID		51307	51308	51309	51310	51311	51312	51313	51314	51315
Total Wt.		995.9	997.0	997.4	992.1	997.1	998.3	901.7	997.3	999.
Hydrometer Wt.		995.9	997.0	997.4	992.1	997.1	998.3	901.7	997.3	999.
Hydrometer No.		152H-9	152H-9	152H-9	152H-9	152H-9	152H-9	152H-9	152H-9	152H-
Balance No.										
Hydrometer:										
Temp.	Time	(1025) Blk Reading	(1027)	(10:30)	(1032)	(10:35)	(10:38)	10:40	(10:42)	(10:49)	(10:5
24	2	Ø	Ø	Ø	Ø	Ø	Ø	Ø	Ø	Ø	Ø
24	5	Ø	Ø	Ø	Ø	Ø	Ø	Ø	Ø	Ø	Ø
24	15	Ø	Ø	Ø	Ø	Ø	Ø	Ø	Ø	Ø	Ø
24	30	Ø	Ø	Ø	Ø	Ø	Ø	Ø	Ø	Ø	Ø
24	60	Ø	Ø	Ø	Ø	Ø	Ø	Ø	Ø	Ø	Ø
24	250	Ø	Ø	Ø	Ø	Ø	Ø	Ø	Ø	Ø	Ø
24	1440	Ø	Ø	Ø	Ø	Ø	Ø	Ø	Ø	Ø	Ø

Reviewed By: KN
KEVIN VILLALOBOS
Date: 3-24-95
SwRI EWG LABS

SCIENTIFIC SINDERY PRODUCTIONS CHICAGO 60605 MADE IN USA

Work continued to Page

SIGNATURE
DATE 3-23-95
DISCLOSED TO AND UNDERSTOOD BY
DATE
WITNESS
DATE
VG
B-0141

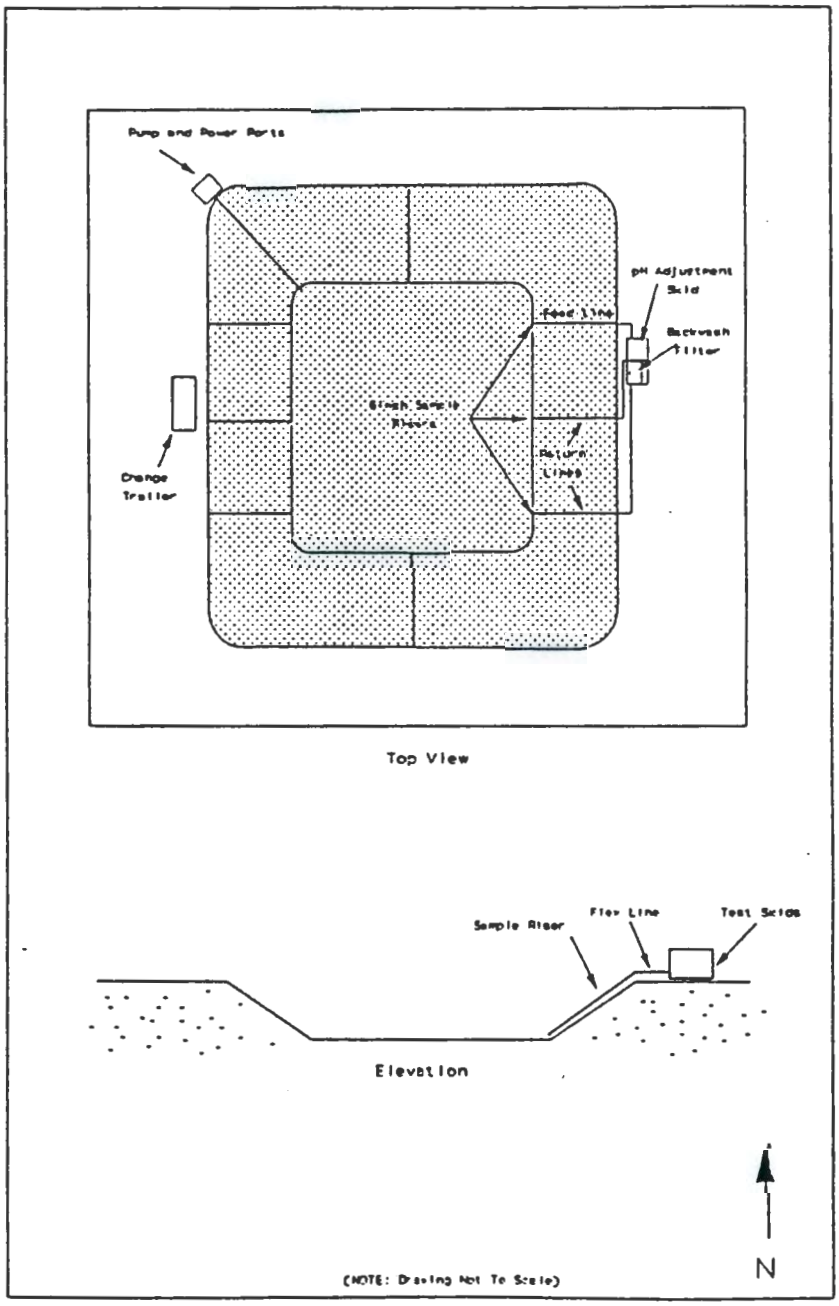

FIGURE 1. LIQUID EFFLUENT RETENTION FACILITY (LERF) BASIN LAYOUT

B-0142

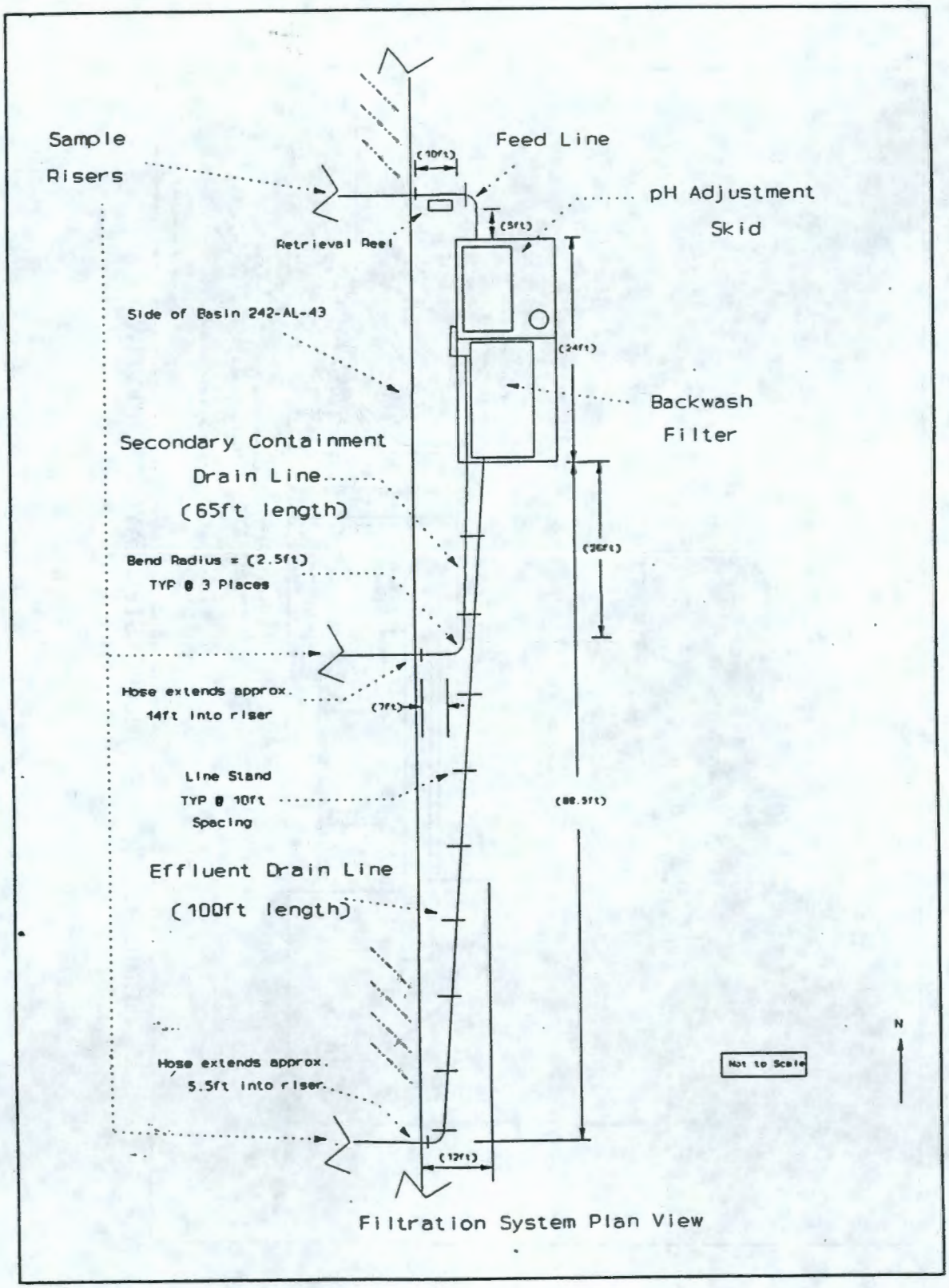

FIGURE 2. LERF FILTRATION SYSTEM PLAN VIEW

B-0143

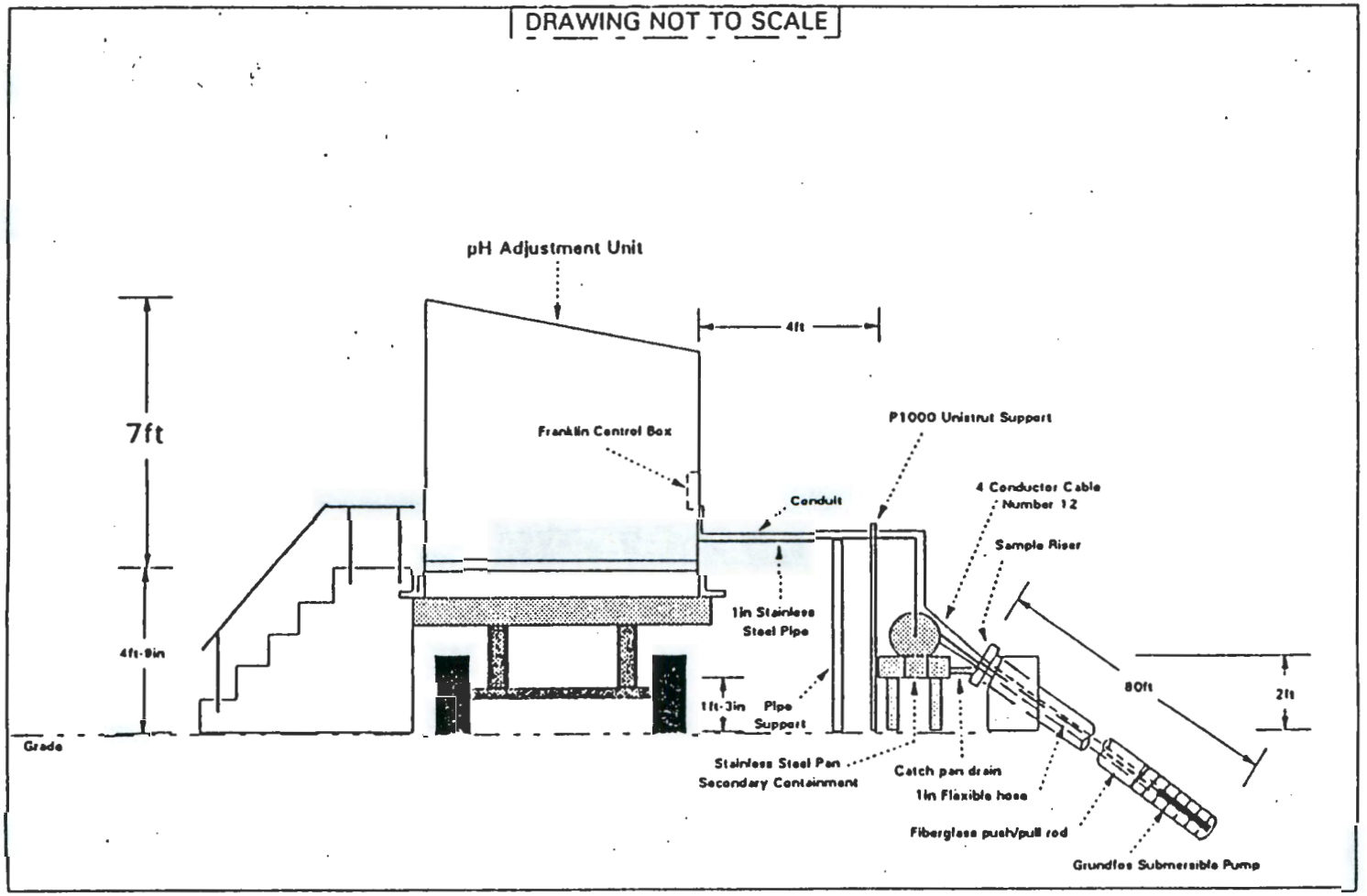

FIGURE 3. LERF FILTRATION SYSTEM LAYOUT END VIEW

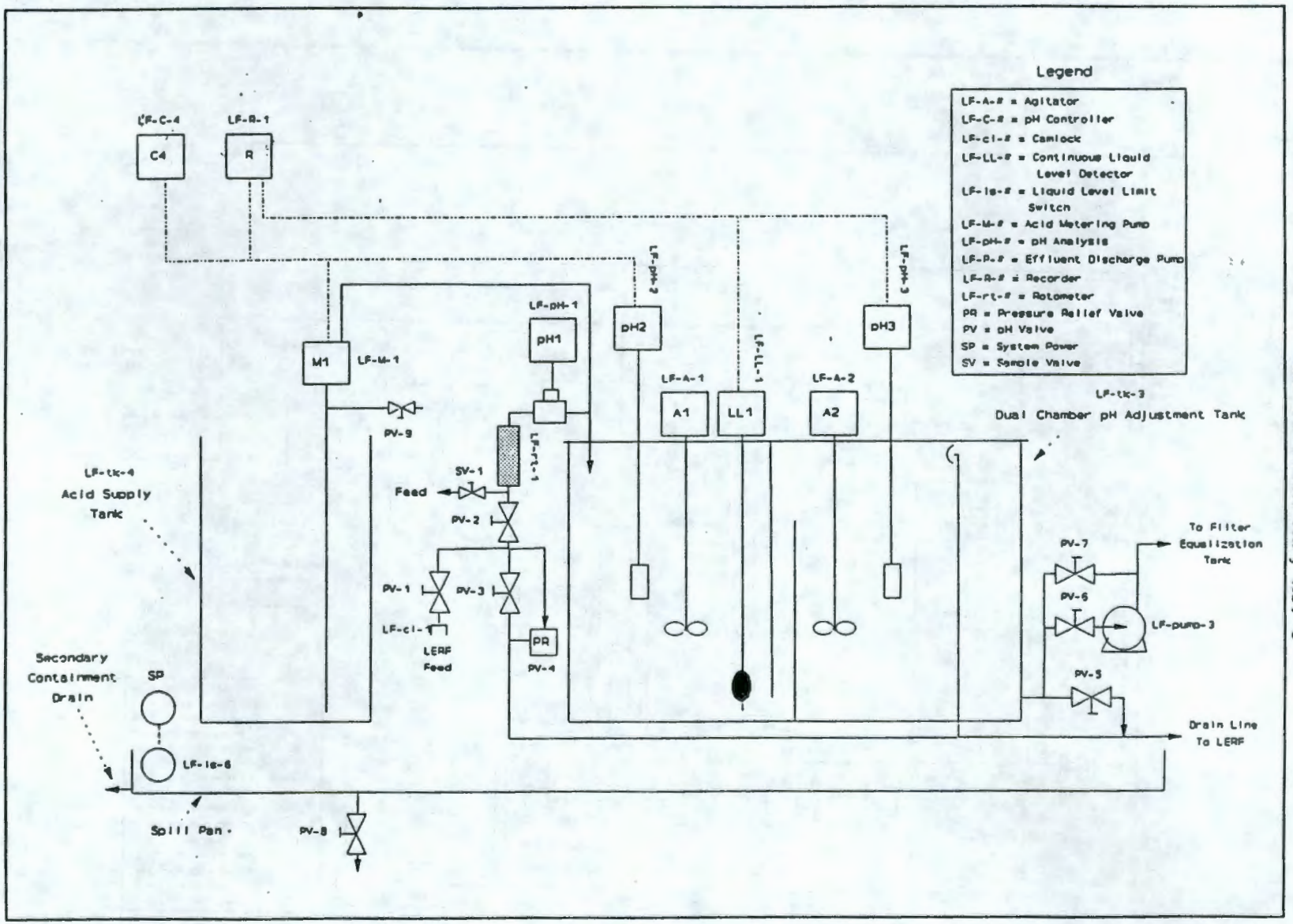

FIGURE 4. LERF pH ADJUSTMENT UNIT FLOW DIAGRAM

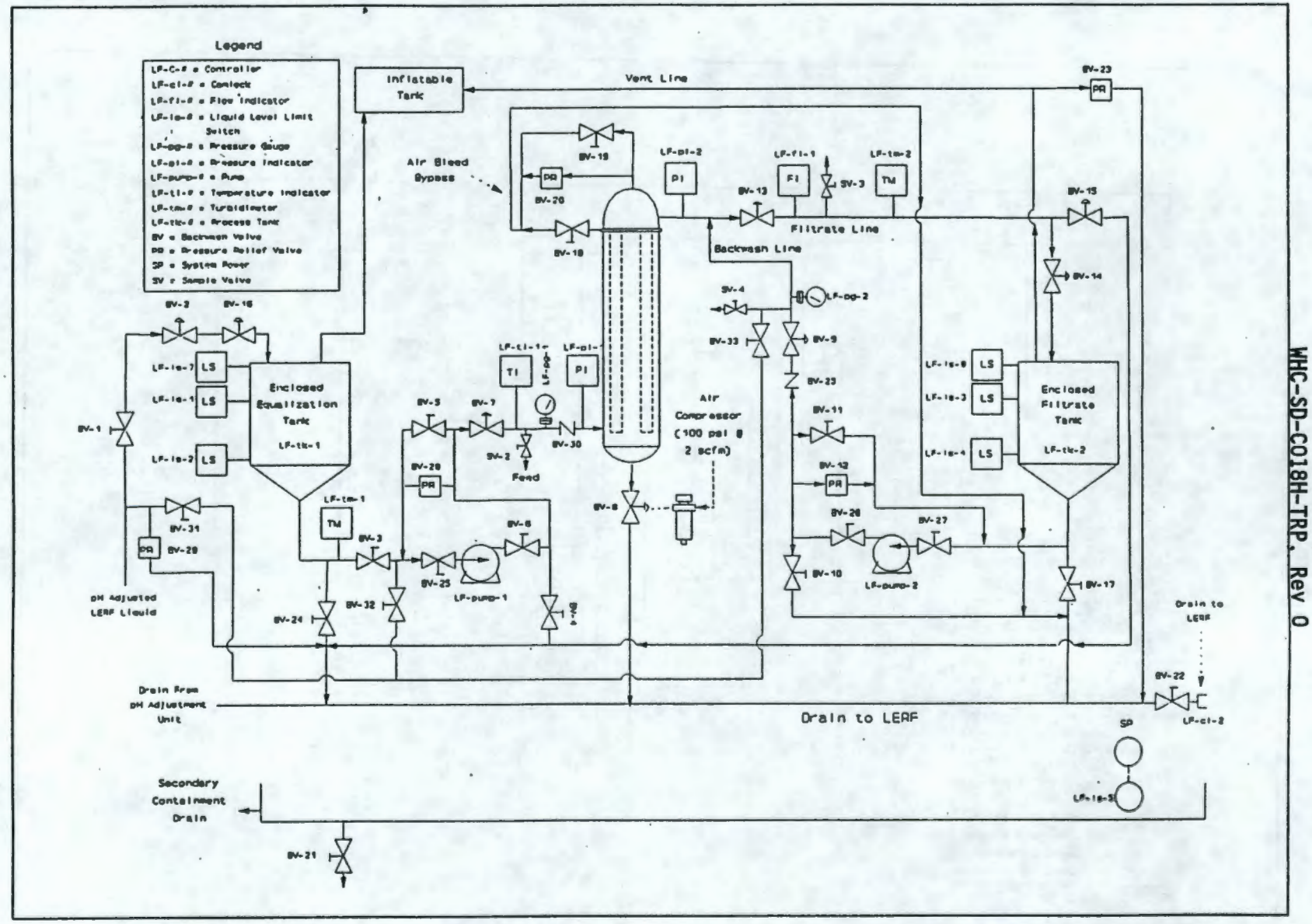

FIGURE 5. LERF BACKWASH FILTER UNIT FLOW PLAN

Table 1. Sampling Schedule

Analyses	Day 1 (No.)	Day 2 (No.)	Day 3 (No.)	Day 4 (No.)	Day 5 (No.)
Total suspended solids	6	6	6	6	6
Particle Size Analysis	6	6	6	6	6
Biological Analysis		2			
ICP-Metals	4	4	4	4	4

Note: The duplicates are included in the number of samples for each day.

Table 2. Sample Collection Frequency

Sample point	Process stream	Analysis	Frequency
1	Initial LERF Feed to pH Adjustment Unit	Total suspended solids	Daily
		Biological analysis	Once per test
		Particle size analysis	Daily
		Inductively coupled plasma	Daily
2	pH-Adjusted Feed	Total suspended solids	Daily
		Biological analysis	Once per test
		Particle size analysis	Daily
3	Filtrate from Backwash Filters	Total suspended solids	Daily
		Biological analysis	Once per test
		Particle size analysis	Daily
		Inductively coupled plasma	Daily

TABLE 3 - LERF SAMPLE VOLUMES, CONTAINERS, AND PRESERVATIVES

Analyte class	Container[a] (quantity, size, type)	Preservation
Biological growth	2 x 0.5 L glass	None
Particle size analysis	2 x 20 ml glass	None
Total suspended solids	2 x 20 ml glass	None
Metals-total recoverable	2 x 1,000 ml glass or polyethylene	HNO_3 to pH <2 Cool, 4 °C

[a]HASM will provide the S&ML the specific container/sample volume requirements on a Sample Analysis Form before the sampling event.

OFFICE OF SAMPLE MANAGEMENT
FIELD SAMPLING REQUIREMENTS

95-035
SAF Number

Requirements are for Lockheed

REV 0 03/03/95

PARAMETER/ ANALYSIS	ANALYTICAL METHODS	CONTAINER[1]/ VOLUME	PRESERVATION	HOLDING TIME
1. ICP Metals – TAL	6010	G 400 mℓ	HNO_3 to pH <2 *Cool 4°C	6 Months
2. TSS	EPA 160.2	P/G 400 mℓ	Cool 4°C	7 Days
3. Particle Size	Modified ASTM D422	P/G 1500 mℓ	None	ASAP
4. Activity Scan (Lockheed)	Lab Specific	Gs 40 mℓ	Cool 4°C	ASAP
5. Total Activity (222S)	Lab Specific	G/P small vial (at least 1 g)	None	ASAP

****

Requirements are for PNL

REV 0 02/24/95

95-035
SAF Number

PARAMETER/ ANALYSIS	ANALYTICAL METHODS	CONTAINER[1]/ VOLUME	PRESERVATION	HOLDING TIME
1. Biological Growth	Lab Specific	G 2x1000 mℓ	None	ASAP
2. Total Activity (222S)	Lab Specific	G/P small vial (at least 1 g)	None	ASAP

[1] Container Types:

P	=	Plastic (Polyethylene)	Pw	=	Plastic (Polyethylene)/wide mouth jar
G	=	Glass	PP	=	Polypropylene
Gs	=	Glass w/septum cap	aG	=	Amber Glass
Gw*	=	Glass/wide mouth jar	T	=	Fluorocarbon Resins
Gs	=	Glass w/septum cap -- No head space in container	aGs*	=	Amber Glass w/septum cap
			aGs	=	Amber Glass w/septum cap No head space in container

[2] 7 Days for Extraction, 40 Days for Analysis

* Recommended Preservation

B-0150

OFFICE OF SAMPLE MANAGEMENT
FIELD SAMPLING REQUIREMENTS

95-035
SAF Number

Requirements are for Lockheed
The influent to the LERF Filtration System Sample

REV 0 03/03/95

PARAMETER/ ANALYSIS	ANALYTICAL METHODS	CONTAINER[1]/ VOLUME	PRESERVATION	HOLDING TIME
1. ICP Metals — TAL to include: ▸ Ca, Cr, K, Na	6010	G 400 mℓ	HNO_3 to pH <2 *Cool 4°C	6 Months
Mercury	7470			28 Days
2. TSS	EPA 160.2	P/G 400 mℓ	Cool 4°C	7 Days
3. TDS	EPA 160.1	P/G 400 mℓ	Cool 4°C	7 Days
4. Particle Size	Modified ASTM D422	P/G 1500 mℓ	None	ASAP
5. Anions:	EPA 300.0	P 500 mℓ	Cool 4°C	
▸ F, Cl, SO_4				28 Days
▸ NO_2, NO_3, PO_4				48 Hours
6. Alkalinity	EPA 310.1	P/G 200 mℓ	Cool 4°C	14 Days
7. Activity Scan (Lockheed)	Lab Specific	Gs 40 mℓ	Cool 4°C	ASAP
8. Total Activity (222S)	Lab Specific	G/P small vial (at least 1 g)	None	ASAP

****

Requirements are for PNL
The influent to the LERF Filtration System Sample

95-035
SAF Number

REV 0 03/03/95

PARAMETER/ ANALYSIS	ANALYTICAL METHODS	CONTAINER[1]/ VOLUME	PRESERVATION	HOLDING TIME
1. Biological Growth	Lab Specific	G 2x1000 mℓ	None	ASAP
2. Total Activity (222S)	Lab Specific	G/P small vial (at least 1 g)	None	ASAP

[1] Container Types:

- P = Plastic (Polyethylene)
- G = Glass
- Gs = Glass w/septum cap
- Gw_* = Glass/wide mouth jar
- Gs = Glass w/septum cap -- No head space in container
- PW = Plastic (Polyethylene)/wide mouth jar
- PP = Polypropylene
- aG = Amber Glass
- T = Fluorocarbon Resins
- aGs_* = Amber Glass w/septum cap
- aGs = Amber Glass w/septum cap No head space in container

[2] 7 Days for Extraction, 40 Days for Analysis

* Recommended Preservation

B-0151

9513388.1861

DISTRIBUTION SHEET

To	From	Page 1 of 1
Distribution	F.N. McDonald	Date
Project Title/Work Order		EDT No. 136779
Filtration Testing at the LERF		ECN No.

Name	MSIN	Text With All Attach.	Text Only	Attach./ Appendix Only	EDT/ECN Only
R.C. Bowman	H6-24	X			
J.G. Coenenberg	H6-24		X		
A.J. Diliberto	H6-32	X			
D.L. Flyckt	S6-71	X			
C.V. King	S4-25		X		
J.A. Hunter	L5-31		X		
L.L. Lin	S6-71	X			
F.N. McDonald ~~42~~ 3	H6-28	X			
I.G. Papp	S6-71		X		
M.W. Peres	S6-71		X		
N.J. Sullivan	S6-71		X		
J.D. Williams	H6-28		X		
R.B. Wurz	S6-71		X		
Central Files	A3-88	X			