0048497

BHI-01053
Draft A

Effluent Variability Study Plan and Sampling and Analysis Plan for the 183-N Backwash Discharge Pond

Authors
J. V. Borghese
D. A. St John
D. L. Bryant
J. P. Zoric

JAN 1998
RECEIVED
EDMC

Date Published
June 1997

Environmental Excellence
HANFORD

Prepared for the U.S. Department of Energy
Office of Environmental Restoration

Bechtel Hanford, Inc.
Richland, Washington

For External Review

THIS PAGE INTENTIONALLY
LEFT BLANK

BHI-01053
Draft A

Effluent Variability Study Plan and Sampling and Analysis Plan for the 183-N Backwash Discharge Pond

Authors
J. V. Borghese
D. A. St John
D. L. Bryant
J. P. Zoric

Date Published
June 1997

HANFORD

Prepared for the U.S. Department of Energy
Office of Environmental Restoration

Bechtel Hanford, Inc.
Richland, Washington

For External Review

THIS PAGE INTENTIONALLY
LEFT BLANK

BHI-01053
REV: Draft A
OU: N/A
TSD: N/A
ERA: N/A

APPROVAL PAGE

Title of Document: Effluent Variability Study Plan and Sampling and Analysis Plan for the 183-N Backwash Discharge Pond

Author(s): J. B. Borghese
D. A. St John
D. L. Bryant
J. P. Zoric

Approval: M. E. Greenidge
Project Manager

Signature _____ Date 6/24/97.

The approval signature on this page indicates that this document has been authorized for information release to the public through appropriate channels. No other forms or signatures are required to document this information release.

TOTAL PAGES: ____

THIS PAGE INTENTIONALLY
LEFT BLANK

CONTENTS

1.0 INTRODUCTION 1

2.0 REGULATORY FRAMEWORK 1

3.0 WASTEWATER 2

4.0 SAMPLING AND ANALYSIS 3

5.0 STATISTICAL EVALUATION 3

6.0 REPORTS 4

7.0 REFERENCES 4

FIGURES

1-1. Location of the 183-N Backwash Discharge Pond 5
3-1. 183-N Water Treatment Plant Wastewater Streams 6

TABLES

3-1 Estimated Discharge to 183-N Backwash Discharge Ponds 7

APPENDIXES

A Sampling and Analysis Plan . . . . . A-i

THIS PAGE INTENTIONALLY
LEFT BLANK

1.0 INTRODUCTION

The 100-N Reactor at the Hanford Site used large quantities of water for cooling purposes. To support these water requirements the 183-N Water Treatment Plant was constructed in 1963 to provide treated water of the 100-N Reactor, auxiliary support systems, and administrative buildings. In 1986, the 100-N Reactor and auxiliary facilities were placed in standby configuration. In 1991, U.S. Department of Energy (DOE) ordered that the preservation activities cease, and steps were taken to place the facility in a condition requiring only minimal surveillance and maintenance. Water systems have been deactivated with the exception of the potable water system, which will continue to operate through the completion of decontamination and decommissioning. Wastewater generated at the water filtration plant is discharged to the 183-N Backwash Discharge Pond (Figure 1-1).

The 183-N Backwash Discharge Pond is an unlined, natural depression that is located about 520 m (1,700 ft) southeast of the 183-N Building, within the 100-N Area of the Hanford Site (Figure 1-1). The pond is approximately 820 m (2,700 ft) from the Columbia River. The current wetted portion of the pond is rectangular in shape, trends north-south, and is approximately 91 m long by 36 m wide (300 ft long by 120 ft wide). The 183-N Backwash Discharge Pond receives effluent from three wastewater streams that are connected to the 183-N Water Treatment Plant.

This document presents a plan to determine the chemistry and the variability of the effluent stream going to the 183-N Backwash Discharge Pond. This plan meets requirements S7 and S2.E of the State Waste Discharge Permit No. 4503 (Ecology 1997) by presenting an effluent variability study plan and a sampling and analysis plan. The permit, issued on May 12, 1997, stated that the effluent variability study and the sampling and analysis plan (SAP) were to be submitted within 60 days of permit issuance, and that the plans could be combined.

The scope of this plan is to ensure the collection of the necessary data as required by the permit, and present the evaluation methods by which the variability of the effluent will be determined. The body of this report discusses regulatory guidance (Section 2), background information (Section 3), proposed sampling and analysis (Section 4), statistical evaluation (Section 5), and reports (Section 6). Appendix A contains the SAP.

2.0 REGULATORY FRAMEWORK

On December 23, 1991, the Washington State Department of Ecology (Ecology) entered into Consent Order No. DE91NM-177 with the DOE, Richland Operations Office (RL). The Consent Order required that liquid effluent streams at Hanford be subject to certain regulatory milestones, including state waste discharge permitting under *Washington Administrative Code* Chapter 173-216. In June 1994, RL submitted a permit application for Miscellaneous Streams listed in Table 4 of the Consent Order including the 183-N Backwash Discharge Pond.

State Waste Discharge Permit No. ST-4503 (Ecology 1997) was issued to RL to allow discharge of wastewater to the pond on May 12, 1997. Condition S7 of the permit requires that an Effluent Variability Study Plan be developed that includes the proposed sampling, analysis, and statistical evaluation plan to determine the variability in the effluent of the constituents specified in Condition S2 of the permit. The plan must be submitted to the Ecology within 60 days of permit issuance.

3.0 WASTEWATER

There are three wastewater streams that are routed to the 183-N Backwash Discharge Pond (Figure 3-1). Wastewater Stream 1 is the Coagulator Drain Stream; Wastewater Stream 2, from the sample tap, is collected in Sump 2; and Wastewater Stream 3 is the backwash water. Flows from these sources are listed in Table 3-1.

Wastewater Stream 1 is derived from the annual draining and washing of the coagulator basins. Only one of the two coagulator basins is in use at any time. Aluminum sulfate and chlorine are added to the raw water in the coagulator basins. The basins are generally cleaned during the summer months, in a batch process, using a fire hose and potable water. The sludge and water are collected in the 183-N Sludge Sump (coagulator basin drain) and are pumped directly to the 183-N Backwash Discharge Pond. The volume of wastewater from cleaning is about equal to the basin capacity of 2,271,000 L (600,000 gal). The composition of this discharge is similar to the intake water composition (river water) and virtually the same as Wastewater Stream 3.

Wastewater Stream 2 is collected in Sump 2 and automatically pumped to the 183-N Backwash Sump and then to the 183-N Backwash Discharge Pond. This wastewater includes potable water from a continuously flowing sample tap and a water container drying area drain. The flowrate for this stream is estimated at 136,000 L per day (36,000 gal per day), mainly from the sample tap.

Wastewater Stream 3 consists mainly of the backwash from the multimedia gravity filters. The multimedia gravity filters consist of multiple layers of sand, charcoal, and gravel. Polyacrylamide is added to the water at this stage to aid infiltration through the filter. Particulates trapped in the gravity filters are removed by reverse flushing the filter pack with potable water. The backflush wastewater flows from the filter into a waste trough, through the collection piping in the 183-N Building, then drains to the 183-N Backwash Sump and from the backwash sump to the 183-N Backwash Discharge Pond. Each backwash generates wastewater at a rate of 28,000 L per minute (7,400 gal per minute) and lasts about 8 minutes, resulting in approximately 224,000 L (59,200 gal) of waste water per backwash. In addition, the filter basins are drained with each backwash generating an additional 71,900 L (19,000 gal) per backwash. Frequency of backwash is dependent on the quality of water input to the treatment facility and ranges from one backwash for every 100 to 500 hours of operation.

4.0 SAMPLING AND ANALYSIS

Wastewater monitoring of the effluent will be accomplished by collecting samples of the wastewater at the end of the pipe prior to discharging into the 183-N Backwash Discharge Pond. Grab samples of the effluent will be taken every two weeks. Samples for a longer list of analytical parameters will be taken monthly. Sampling methods, frequency of collection, constituents analyzed, and analytical methods are presented in the SAP (Appendix A). The Sampling approach described in the SAP ensures that all streams are analyzed.

5.0 STATISTICAL EVALUATION

The variability of the constituents specified in the permit will be determined by evaluating the analytical results from the samples collected from the effluent point (detailed in Appendix A). The evaluation will consist of reviewing all data to identify possible outliers, plotting data on trend charts (constituent concentration versus time), and summarizing concentrations and variability using descriptive statistics.

Statistics that will be used to summarize concentration levels of the measured constituents are the mean and median. The range and the standard deviation will be used to describe the variability of the sample set. The standard deviation is a measure of how individual measurements deviate from the mean of all measurements. The percentage of measurements that lie within two standard deviations from the mean will also be determined.

Concentrations of measured constituents in the effluent will be compared to those in upgradient well, 699-81-58. This well is sampled annually by Pacific Northwest National Laboratory under the Sitewide Surveillance Program. Sampling of this well will be performed under the protocol of the Surveillance Program.

The quality of groundwater from the upgradient well and the quality of the effluent will be compared using several statistical procedures. Qualitative comparisons such as trend charts will be complimented with more rigorous statistical evaluation methods which will determine the distribution of the data. The data distribution will indicate the appropriate statistical test. If the data are normally distributed, the standard method of comparison is the t-test, as described in 40 CFR 265, Subpart F. This method applies the t-test at the 0.01 level of significance to test for differences between two sets of data. If the data are lognormally distributed or are nonparametric and the distributions of the two data sets are similar, the Wilcoxon Rank Sum test will be used to compare the two data sets at a 95 percent confidence level. The test is well-suited for comparing different sets of data on a distribution-free basis, but can only be used under the condition that the data sets have identical distributions. If this is not the case, a confidence interval approach will be used by computing an upper confidence interval on the mean of each of the constituents of concern for the background data, and comparing this to the average value for each analyte

from the effluent stream. The confidence interval will be determined after considering the distribution of the data and the range of values for each analyte.

6.0 REPORTS

An Effluent Variability Study will be submitted within 18 months (December 1998) of permit issuance using data collected from the first twelve months. The study will contain the following information: 1) summary of the effluent data, including a statistical analysis of variability, 2) description of exceedances of permit effluent limits, and actions and/or proposed actions to eliminate exceedances, and 3) a comparison of effluent quality with the groundwater quality in upgradient well 699-81-58, or other relevant Hanford groundwater information, as appropriate.

7.0 REFERENCES

Ecology, 1997, *State Waste Discharge Permit, State of Washington Department of Ecology Nuclear Waste Program*, Permit No. 4503, May 12, 1997, State of Washington Department of Ecology, Kennewick, Washington.

Figure 1-1. Location of the 183-N Backwash Discharge Pond

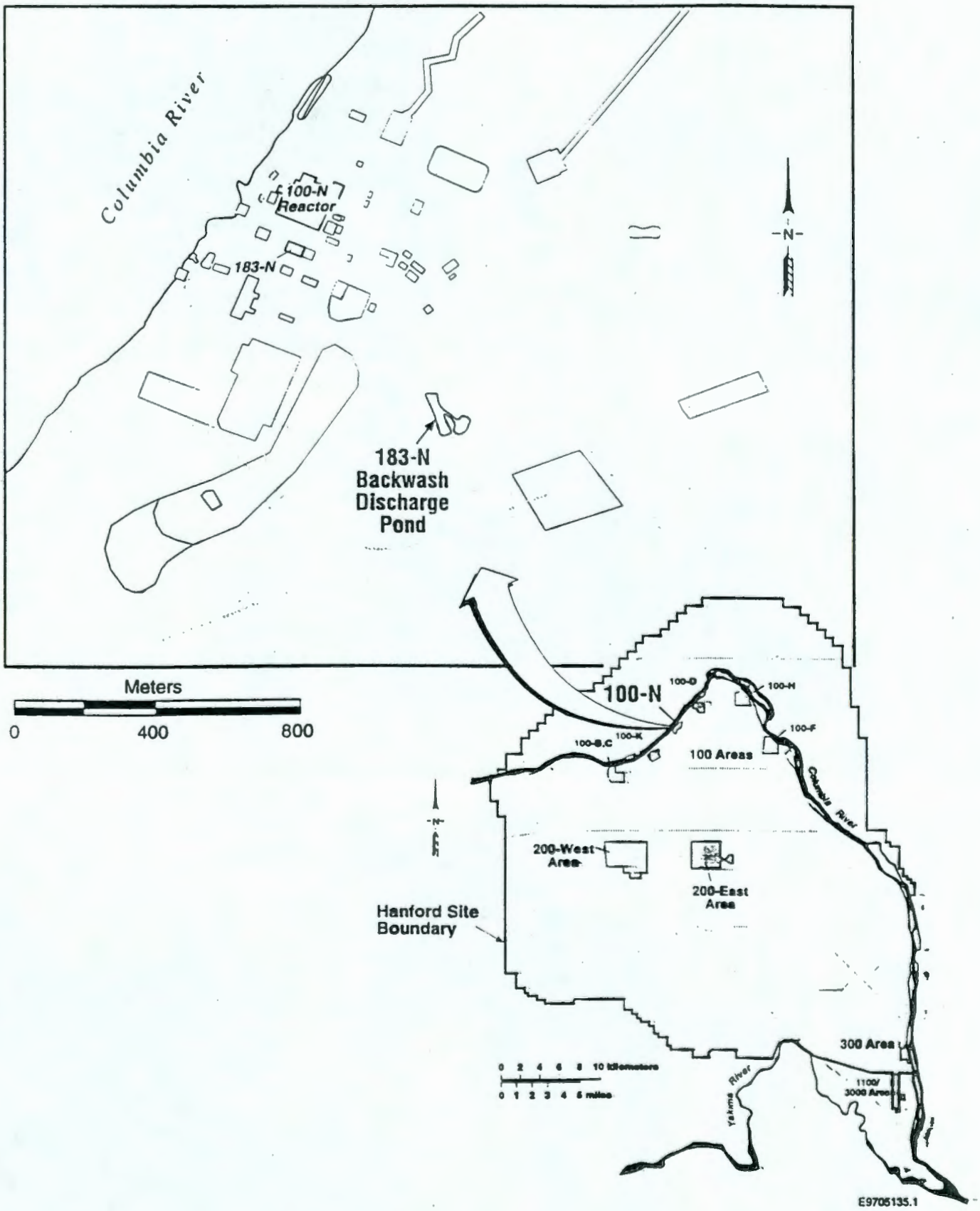

Figure 3-1. 183-N Water Treatment Plant Wastewater Streams

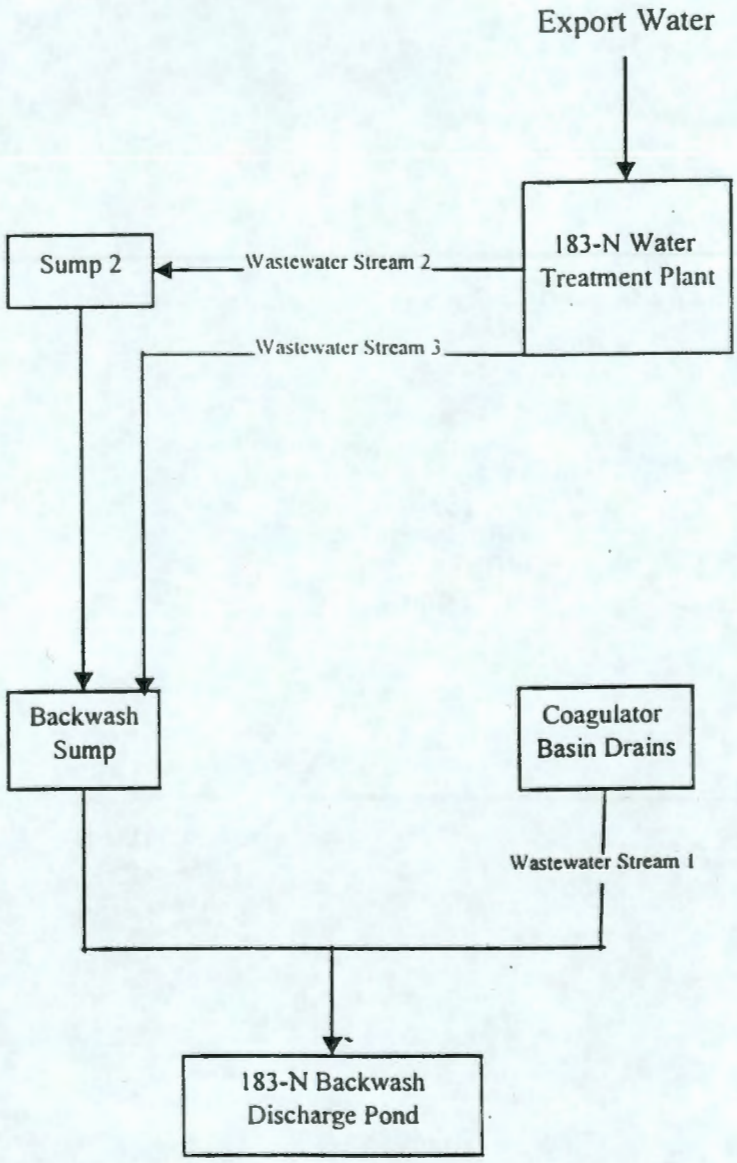

Table 3-1. Estimated Discharge to 183-N Backwash Discharge Ponds

Wastewater Stream	Contributors	Discharge	Frequency	Estimated Annual Discharge
1	Coagulator basin sludge sump	2,271,000 L (600,000 gal) per cleaning	Annually	2,271,000 L (600,000 gal)
2	183-N Building Sump 2	136, 260 L (36,000 gal per day)	Continuous	49,735,000 L (13,140,000 gal)
3	Filter backwash water	296,000 L (78,200 gal) per backwash	Once per every 100 to 500 hrs of filter use	2, 051,000 L* (542,000 gal)
			Total	54,057,000 L (14,282,000 gal)

* Assumes filter backwash occurs every 300 hrs of use.

THIS PAGE INTENTIONALLY
LEFT BLANK

APPENDIX A

SAMPLING AND ANALYSIS PLAN

A1.0 INTRODUCTION

This Sampling and Analysis Plan (SAP) describes the field activities and methods associated with the collection and analysis of samples for compliance with the Washington State Department of Ecology (Ecology) State Waste Discharge Permit, Number 4503, issued for the 183-N Backwash Discharge Pond. This permit was issued on May 12, 1997.

A2.0 PROGRAM DESCRIPTION

A2.1 BACKGROUND

The 183-N Water Treatment Plant was constructed in 1963 to support operations of the 100-N Reactor which is located in the 100-N Area of the Hanford Site. This water filtration plant provided treated water to support the operation of the 100-N Reactor for cooling purposes, water for auxiliary support systems, and potable water for administrative buildings and offices. In 1991, the United States Department of Energy (DOE) ordered the deactivation of the 100-N Reactor. The buildings and facilities associated with this reactor are presently undergoing deactivation. Currently, the water systems associated with the 100-N Reactor and the auxiliary support systems have been deactivated, and the potable water system is still in use. It is expected that this water system will remain in use until decontamination and decommissioning activities have been completed.

A2.2 FACILITY DESCRIPTION

The 183-N Backwash Discharge Pond is located approximately 520 meters (1,700 feet) southeast of the 183-N Building and approximately 825 m (2,700 ft) southeast of the Columbia River. The location of these facilities are shown in Figure A1-1. The discharge pond is an unlined, natural depression that consists of three adjoining parts: an eastern pond area at which a discharge point is located, a western dry pond area, and a small channel which connects the east and west pond areas. The eastern pond area is roughly rectangular shaped and measures approximately 90 meters by 35 meters (300 feet by 120 feet). An eight-inch discharge pipe is located at the northern end of this pond. The western dry pond measures approximately 45 meters (150 feet) in diameter. The channel connecting the two ponds measures approximately 18 meters (60 feet) in length and 14 meters (45 feet) in width. Waste water received by this discharge area either percolates into the ground or evaporates. Currently, standing water is only occasionally present in the east pond area near the discharge pipe. The western pond does not receive water as the 183-N Water Treatment Plant operations have been greatly reduced since 1991. However, prior to 1991 and during operation of the 100-N Reactor, enough water was processed such that the western pond would frequently receive waste water.

There are three streams from which wastewater is routed to the 183-N Backwash Discharge Pond. These streams include the drain at the coagulator basins, backwash from a multimedia gravity filter, and water from Sump 2 located in the 183-N Building. Waste from the coagulator basins is generated on an annual basis and consists of sludge and potable water during the rinsing of this basin. Backwashing of the multimedia filter is conducted to rinse particulate that has attached to the sand and charcoal filter bed, and is conducted after approximately every 100 hours of plant operation. Sump 2 drains potable water received from a continuously flowing sample tap and a water container drying area drain. From these three streams, the average flow of waste water to the 183-N Backwash Discharge Pond is estimated to be approximately 151,000 L per day (40,000 gal per day). A process flow diagram for the water treatment process is presented in Figure A2-2.

A2.3 PREVIOUS INVESTIGATIONS

Characterization data were collected during two previous sampling events at the 183-N Backwash Discharge Pond. These sampling events occurred on June 26, 1995 and April 4, 1996. Analytical data from these sampling events indicated the presence of barium and magnesium at two sample locations. The sample collected from Sump 2 during the first sampling episode on June 26, 1995 exhibited barium at a concentration of 4.79 mg/L and magnesium at a concentration of 5.78 mg/L. Barium and magnesium were not detected in the samples collected from Sump 2 during the second sampling episode on April 4, 1996. The sample collected from the 183-N Backwash Sump on June 26, 1995 exhibited barium at a concentration of 7.89 mg/L and magnesium at a concentration of 0.74 mg/L. Barium was not detected in the sample collected from the 183-N Backwash Sump on April 4, 1996, however, analytical data for this sample indicated the presence of magnesium at a concentration of 0.030 mg/L. Per *Washington Administrative Code* (WAC) Chapter 173-200, the discharge limit for barium is 1.0 mg/L and the discharge limit for magnesium is 0.05 mg/L. The reason for the presence of these two constituents could not be determined.

Analytical data also indicated that the pH of the June 26, 1995 sample collected from Sump 2 was 5.5 Standard pH units. The pH of the April 4, 1996 sample collected from this location was reported at 7.6 Standard pH units. Per WAC Chapter 173-200, the discharge limit is defined as an acceptable range of 6.5 to 8.5 Standard pH units.

Analytical data indicated the presence of acetone in the sample collected on April 4, 1996 from the Sump 2. However, acetone is not utilized in the water treatment process at the 183-N Building and is considered to be a common laboratory contaminant. Chloroform and bromodichloromethane were detected in the April 4, 1996 samples collected from the 183-N Backwash Sump, the Sludge Sump and the Sump 2. These constituents are believed to be present because of the chlorination of water during the treatment process.

A2.4 OBJECTIVES

This SAP describes the effluent discharge sampling to be conducted for the 183-N Backwash Pond which is associated with the 183-N Water Treatment Plant. The objective of this sampling effort is to demonstrate that discharges are in compliance with the Washington State Department of Ecology State Waste Discharge Permit, No 4503. Sample collection will be conducted on a routine basis in accordance with this SAP and the discharge permit.

A2.5 APPROACH

Sample collection will occur at the discharge point in the 183-N Backwash Discharge Pond during the backwash cycles of the water treatment plant. These samples will be collected on a routine basis as required by the State Waste Discharge Permit, and as described below in this SAP.

Additional samples will be collected during each rinsing of the Sludge Sump associated with the water plant coagulator basin. The discharge pipe at the backwash pond will also be the location at which these samples will be collected, and sample collection will occur during the flushing of this sump.

A2.6 PROGRAM ORGANIZATION AND RESPONSIBILITIES

This project shall be managed through the Bechtel Hanford, Inc. (BHI) 100-N Decommissioning Project which has assigned a Project Engineer and Task Lead. 183-N Water Treatment Plant personnel will provide assistance in coordinating and performing backwashing activities during routine sampling events, and in coordinating and providing operational support during any non-routine sampling which may occur.

The Environmental Restoration Contractor (ERC) Analytical Field Services Group shall be responsible for sample collection, sample packaging and shipping, and documenting field sample collection activities. The ERC Sample and Data Management Group shall arrange for analytical services at the direction of the project Task Lead

The ERC Quality, Safety and Health Group shall provide any safety support as required. And the ERC Compliance and Quality Programs Group shall be responsible for performing independent Quality Assurance activities.

Figure A1-1. 183-N Backwash Pond Site Plan

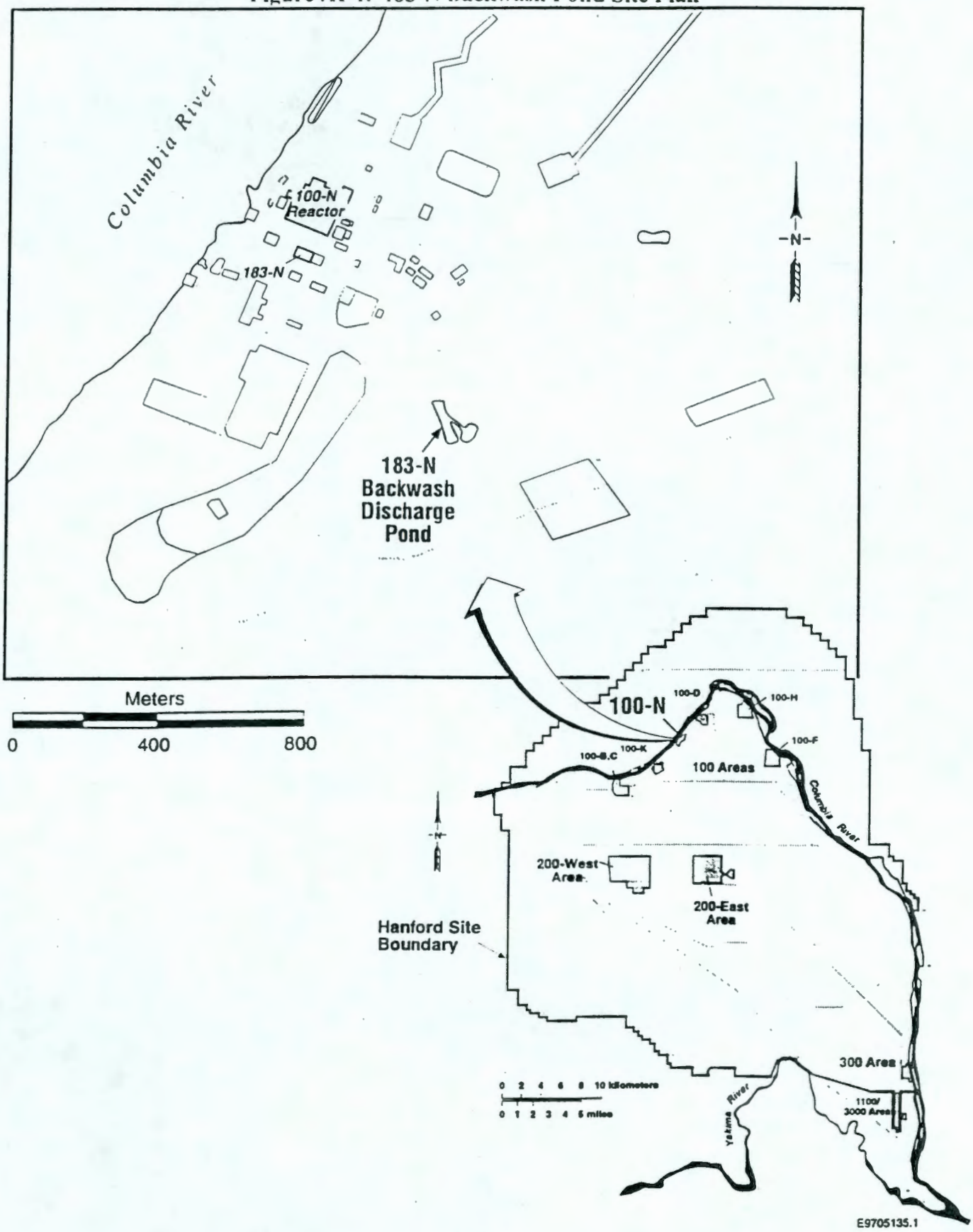

Figure A2-2. 183-N Water Treatment Plant Process Flow Diagram

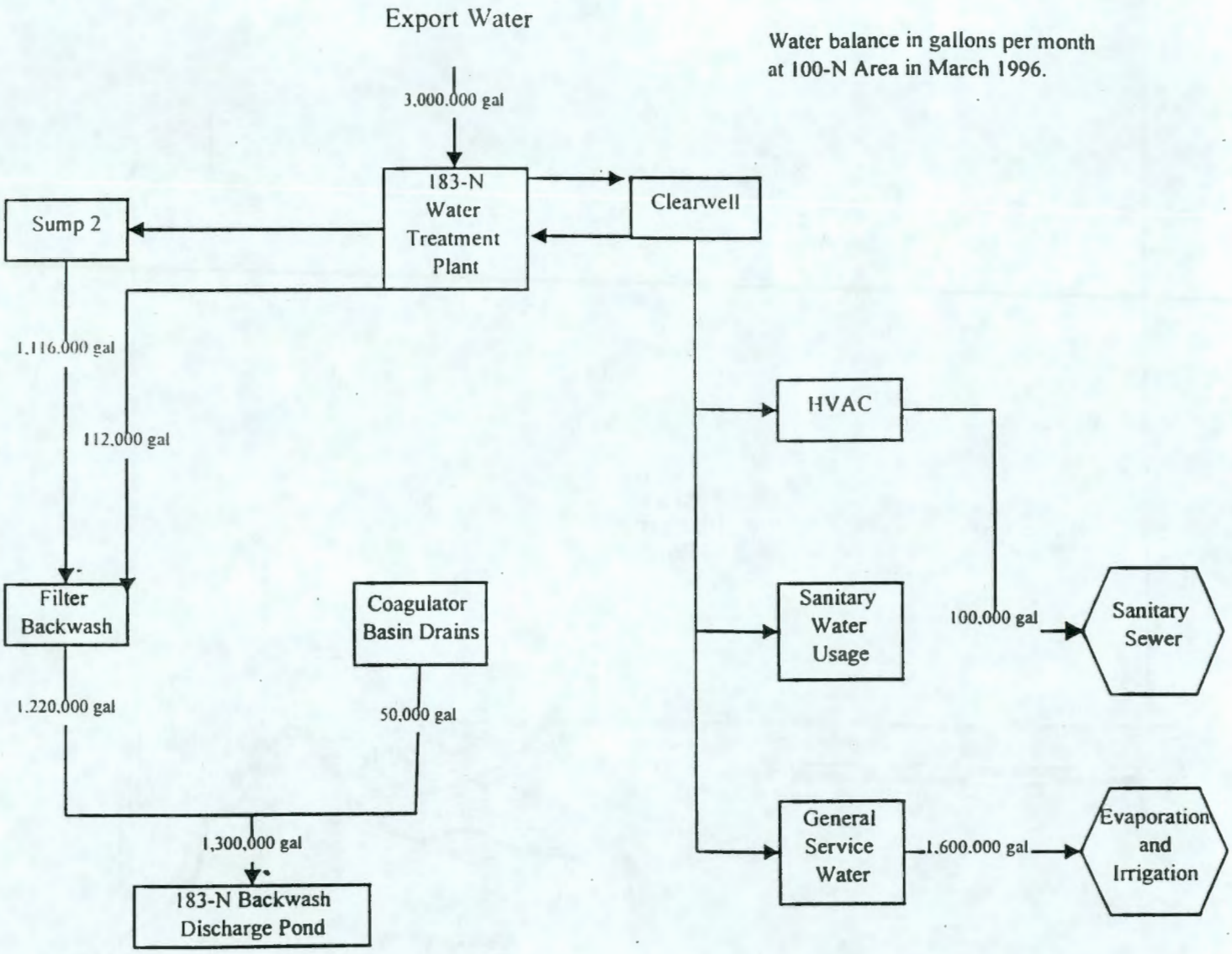

Legend:
HVAC = heating, ventilation and air conditioning

A3.0 SAMPLING LOCATION AND FREQUENCY

A3.1 SAMPLE LOCATION

The 183-N Water Treatment Plant discharge will be sampled at the discharge point in the 183-N Backwash Discharge Pond. This discharge point is located in the at the northern end of the eastern area of the Backwash Pond. Water samples will be taken from the end of the discharge pipe prior to discharging the water into the Backwash Pond. Section S2 Paragraph A of the State Waste Discharge Permit identifies this location for sample collection.

A3.2 SAMPLING FREQUENCY

Four parameters will be monitored every two weeks in order to satisfy the requirements of the discharge permit. Sample collection will occur during the first half of each month and the second half of each month, with roughly equal spacing between events to the extent practical. The analytical parameters for the sampling events are identified in Table A3-1.

Five additional parameters will be monitored in conjunction with the above samples, but on a monthly basis. These samples will be collected to meet the monitoring requirements of the 183-N Backwash Pond Effluent Variability Study as required by the State Waste Discharge Permit. The analytical parameters for the monthly sampling events are identified in Table A3-1.

In addition to the samples identified above, one sample will be collected during each coagulator basin cleaning. This sample set will be analyzed for the parameters which support both the permit monitoring requirements and the effluent variability study. It is expected that coagulator basin cleaning, and subsequent sample collection will be required once per year.

These sample collection frequencies are identified in Section S2, Paragraph A of the State Waste Discharge Permit.

Table A3-1. Sample Collection Frequencies

Parameter	Frequency	Sample Point	Sample Type
pH	every 2 weeks	discharge point at pond	grab
Sulfate	every 2 weeks	discharge point at pond	grab
Trihalomethanes	every 2 weeks	discharge point at pond	grab
Residual Chlorine	every 2 weeks	discharge point at pond	grab
Acrylamide	monthly	discharge point at pond	grab
Total Suspended Solids	monthly	discharge point at pond	grab
Total Dissolved Solids	monthly	discharge point at pond	grab
Volatile Organic Compounds	monthly	discharge point at pond	grab
ICP Metals	monthly	discharge point at pond	grab

A4.0 SAMPLING EQUIPMENT AND PROCEDURES

A4.1 REQUIRED ANALYSIS

Table A4-1 identifies the required analytical parameters for each sampling event, and the detection limits for each of the analyses to be performed as defined in the 183-N State Waste Discharge Permit.

Table A4-1. Table Summarizing Data Quality Requirements

Analytical Parameter	Analytical Method	Detection Limit
pH	EPA 150.1	0.1 Standard Units
Sulfate	EPA 375.4	10 mg/L
Trihalomethanes	EPA 8260	1.0 μg/L
Residual Chlorine	EPA 330.3	0.2 mg/L
Acrylamide	EPA 8316	0.1 mg/L
Total Suspended Solids	EPA 160.2	5 mg/L
Total Dissolved Solids	EPA 160.1	5 mg/L
Volatile Organic Compounds	EPA 8240A	a.
Inductively Coupled Plasma Metals	EPA 6010A	b.
Arsenic	EPA 7060 (Graphite AA)	15 μg/L

a. Report all analytical results above laboratory Practicable Quantitation Limits and all tentatively identified compounds.
b. Report all analytical results above laboratory Practicable Quantitation Limits.

A4.2 SAMPLING EQUIPMENT

Sampling equipment will consist primarily of pre-cleaned intermediate and final sample containers. Sample media will be collected directly into the sample containers, thus eliminating the potential of cross-contamination from intermediate sampling equipment. All sample containers will be pre-cleaned to U.S. Environmental Protection Agency Level C, or higher. Other sampling equipment will include disposable latex or nitrile gloves, disposable wipes, custody tape, poly coolers, sample labels, and other expendable items.

A4.3 SAMPLE PRESERVATION, HOLDING TIMES, CONTAINERS, AND VOLUMES

Sample preservation, holding times, container types, and volume requirements will be addressed through the preparation of a Sampling Authorization Form/Field Sampling Requirements (SAF/FSR) in accordance with BHI-EE-01, Environmental Investigation Procedures (EIP) 2.0, "Sample Event Coordination". Sample containers and preservatives will be obtained through the Analytical Field Services Group in accordance with the volume requirements of the SAF/FSR. Sample preservation, container, and holding time requirements for the analytical parameters are identified in Table A4-2.

Table A4-2. Sample Preservation, Container and Holding Time Requirements

Analyte	Method	Container Type	Volume	Preservative	Holding Time
VOC (Appendix IX)	EPA 8240A	Gs	3 - 40 ml.	HCL of H2SO4 to pH <2 and Cool to 4 C.	14 days
Trihalomethanes	EPA 8260	aGs	3 - 40 ml.	HCL of H2SO4 to pH < 2 and Cool to 4 C.	14 days
Acrylamide	EPA 8316	aG	3 - 40 ml.	Cool to 4 C.	7/40 days
ICP Metals	EPA 6010A	HDPE or G	500 ml.	HNO3 to pH < 2	6 months
Arsenic	EPA 7060	HDPE or G	500 ml.	HNO3 to pH < 2	6 months
Total Residual Chlorine	EPA 330.3	HDPE or G	1 Liter	none	ASAP
Sulfate	EPA 375.4	HDPE or G	150 ml.	Cool to 4 C.	28 days
TDS	EPA 160.1	HDPE or G	500 ml.	Cool to 4 C.	7 days
TSS	EPA 160.2	HDPE or G	500 ml.	Cool to 4 C.	7 days
pH	EPA 150.1	HDPE or G	125 ml.	none	ASAP

Note:
aGs = amber glass septum
aG = amber glass
G = glass
HCL = hydrochloric acid
HDPE = high density polyethylene
H2SO4 = sulfuric acid
ICP = inductively coupled plasma
TDS = total dissolved solids
TSS = total suspended solids
VOC = volatile organic compounds

A4.4 FLOW MEASUREMENT

All flow measurements will be taken by 183-N Water Treatment Plant Operations personnel. Flow measurements will be collected in accordance with Section S2, Paragraph C of the State Waste Discharge Permit. Flow measurements are to be recorded in the plant operations logbook.

A4.5 SAMPLE COLLECTION

Samples will be collected at the discharge point of the 183-N Backwash Discharge Pond, which is located at the northern end of the eastern pond area. The discharge point consists of an eight-inch diameter pipe which runs underground and extends vertically up from the bottom of the Backwash Pond.

Upon arrival at the site, the field samplers will stage all necessary sampling equipment and, once the equipment has been staged, notify the 183-N Water Treatment Plant personnel conducting backwashing operations that sample collection is ready to begin. Once notified that sampling is ready to proceed, 183-N Water Treatment Plant Operations personnel will begin backwashing the multimedia filter so that the flow of waste water to the Backwash Pond will occur .

The samples will be collected by scooping water from directly above the discharged pipe while backwashing operations are in progress. The water will be taken from directly above the pipe to ensure that the collected samples are unaffected by materials in the pond, and that the samples are representative of that water which is being discharged to the pond. Because the discharge pipe extends up vertically from the bottom of the pond it will not be possible to fill the required sample containers directly. Therefore, interim sample containers which are larger than those required by the SAF/FSR (approximately 2 Liter) will be utilized to collect the water from above the discharge pipe. Once the water has been collected it will immediately be distributed to pre-preserved sample containers in accordance with the requirements of the SAF/FSR. The interim sample containers used to collect these samples will be of an equivalent, or better grade, than those sample containers used for final sample collection. All VOC samples will be collected first with a "zero headspace".

As the sample containers are filled the container label information will be completed, the sample containers will be custody sealed, and the samples will be stored in a poly cooler on wet ice. Prior to leaving the site, the field sampling personnel will complete the Chain-of-Custody documentation for the collected samples, and on-site logbook entries will be finalized.

A4.6 SAMPLE IDENTIFICATION

Samples collected under this SAP will be identified using Hanford Environmental Information System (HEIS) sample numbers. HEIS sample numbers will be issued through the ERC Sample and Data Management Group.

A4.7 SAMPLE HANDLING AND SHIPPING

Sample packaging and shipping will be performed in accordance with EIP 3.1, "Sample Packaging and Shipping".

A4.8 SAMPLE CUSTODY

All samples obtained during the course of this monitoring project will be controlled from the point of origin to the analytical laboratory, as required by BHI-EE-01, EIP 3.0, "Chain of Custody". Sample custody during laboratory analysis will be addressed in the applicable laboratory Standard Operating Procedures (SOPs). Laboratory custody will ensure the maintenance of sample integrity and identification throughout the analytical process.

A4.9 SITE ENTRY

Access to the 183-N Backwash Discharge Pond is not restricted. However, field personnel performing sampling activities will coordinate upcoming field events with the 183-N Water Treatment Plant Superintendent so that the requirements of this SAP can be met.

A4.10 EQUIPMENT DECONTAMINATION

Equipment decontamination will not be required under this SAP as intermediate sampling equipment includes only pre-cleaned sample containers.

A4.11 HEALTH AND SAFETY

All field operations will be performed in accordance with BHI health and safety requirements outlined in BHI-SH-01, *Hanford ERC Environmental, Safety, and Health Program*. In addition, a work control package will be prepared in accordance with BHI-MA-02, *ERC Project Procedures*, which will further control site operations. This package will include an activity hazard analysis, site-specific health and safety plan, and applicable radiological work permits.

A4.12 REVISIONS TO THIS SAMPLING AND ANALYSIS PLAN

Any changes to the sampling or analytical methodology, analytes of interest, or the sampling frequencies will be incorporated into this SAP as revisions, and forwarded to Ecology for approval prior to implementation.

A5.0 QUALITY ASSURANCE

This section describes the effort being undertaken to insure quality of the sampling data collected under this SAP. This includes requirements in documentation, sample custody, sample packaging and shipping, and noncompliance notification.

A5.1 LABORATORY ACCREDITATION

Per Section S2, Paragraph D of the State Waste Discharge Permit, any laboratory performing analysis on samples controlled by this SAP must be registered or accredited under the provisions of "Accreditations of Environmental Laboratories", WAC 173-50. The laboratory will also be subject to scheduled and unscheduled audits and surveillance performed by the ERC Quality Assurance Organization.

A5.2 FIELD QA/QC SAMPLES

No Field QA/QC sampling requirements have been identified for sampling activities identified in the State Waste Discharge Permit. QA/QC samples are not planned for this sampling effort.

A5.3 DATA VALIDATION

Laboratory data package validation for analysis performed under this SAP will be classified as Level C, summary data. The data validation requirements for this classification are outlined in BHI-EE-01, EIP 2.5, "Data Package Validation Process".

A5.4 FIELD LOGBOOKS

All field activities will be documented in a controlled field logbook in accordance with BHI-EE-01, EIP 1.5 " Field Logbooks". Field logbook entries shall include, but not be limited to, the following information.

- Person performing sampling activity,
- Location sampling was performed,
- Date of sampling,
- Sample identification number(s),
- The time of sample collection, and
- Any unusual occurrences.

A5.5 CHAIN-OF-CUSTODY

All samples will be maintained under custody as outlined in BHI-EE-01, EIP 3.0, "Chain-Of-Custody". Sample custody will be established at time of sample collection and will be maintained until samples are transferred to the laboratory for analysis.

A5.6 TRAINING

Training or certification requirements needed by personnel are described in BHI-HR-02, *ERC Training Procedures*, and BHI-QA-03, *ERC Quality Assurance*, Plan Numbers 5.1 and 5.2.

Sample collection shall be performed by trained and qualified field samplers. Field personnel shall have completed Occupational Safety and Health 40 Hour Hazardous Waste Worker Training, Radiological Worker II Training, and 100-N Facility Orientation. In addition to the above training, field samplers shall have completed Department of Transportation (DOT) Hazardous Material Shippers Training and DOT Hazardous Material Drivers Training.

A5.7 MANAGEMENT OF WASTE

Waste managed by these monitoring activities will be managed in accordance with BHI-EE-10, Waste Management Plan. Unused samples and associated laboratory waste for the analysis will be dispositioned in accordance with the laboratory contract.

A5.8 ASSESSMENTS AND RESPONSE ACTIONS

The Compliance and Quality Programs Group may conduct random surveillances and assessments in accordance with BHI-MA-02, Procedure 5.3, "Self-Assessments", to verify compliance with the requirements outlined in this Sampling and Analysis Plan, project work packages, the Bechtel Hanford, Inc. Quality Management Plan, and BHI procedures and regulatory requirements.

Deficiencies identified by one of these assessments shall be reported in accordance with BHI-MA-02, Procedure 5.3, "Self-Assessments". When appropriate, corrective actions will be taken by the Project Engineer in accordance with Hanford Analytical Quality Assurance Requirements Document, Volume 1, Section 4.0 (DOE 1996) to minimize recurrence.

A6.0 REPORTING AND RECORDS KEEPING REQUIREMENTS

A6.1 REPORTING

The first monitoring period begins on the effective date of the permit, which is May 12, 1997. Monitoring results will be submitted quarterly. The four quarters will be defined as January through March, April through June, July through September and October through December. Monitoring results will be submitted by the BHI 100-N Decommissioning Project personnel to the Water Quality Permit Coordinator, Department of Ecology, Nuclear Waste Program as defined in the State Waste Discharge Permit.

Monitoring results shall be submitted no later than 60 days following the completion of the quarterly monitoring period. Results shall be submitted using the monthly monitoring forms identified in the permit or another approved method.

A6.2 RECORDS RETENTION

All data used to complete the application for the permit will be maintained for a minimum of three years. Information requiring retention, as identified in the permit, include the following:

- Calibration data,
- Maintenance records,
- Continuous monitoring instrument reading,
- Copy of all reports required by the permit, and
- All data used to complete the application for the permit.

The permit record retention requirements will be achieved through compliance with Section 1.7 "ERC Records Management" of BHI MA-02.

A7.0 NONCOMPLIANCE NOTIFICATION

In the event that the Permittee is unable to comply with any of the 183-N State Waste Discharge Permit terms and conditions, the Permittee will comply with the requirements listed in S3.E of the permit.

Non-conformance reporting will be the responsibility of the BHI 100-N Decommissioning Project Manager.

A8.0 REFERENCES

WAC 173-200, 1995, "Water Quality Standards for Surface Waters of the State of Washington," *Washington Administrative Code*, as amended.

WAC 173-50, 1995, "Accreditations of Environmental Laboratories," *Washington Administrative Code*, as amended.

BHI-EE-01, *Environmental Investigation Procedures*, Bechtel Hanford, Inc., Richland, Washington.

BHI-EE-10, *Environmental Investigation Procedures*, Bechtel Hanford, Inc., Richland, Washington.

BHI-HR-02, *ERC Training Procedures*, Bechtel Hanford, Inc., Richland, Washington.

BHI-MA-02, *ERC Project Procedures*, Bechtel Hanford Company, Richland, Washington.

BHI-QA-03, *ERC Quality Assurance Plan*, Bechtel Hanford, Inc., Richland, Washington.

BHI-SH-01, *Hanford ERC Environmental, Safety and Health Program*, Bechtel Hanford, Inc., Richland, Washington.

DOE 1996, *Hanford Analytical Services Quality Assurance Requirements Document*, DOE/RL-96-68, U.S. Department of Energy, Richland Operations Office, Richland, Washington.

HSRCM-1, *Hanford Site Radiological Control Manual, Bechtel Hanford*, Inc., Richland, Washington.

DISTRIBUTION

BHI
D. D. Blankenship X7-75
J. V. Borghese H9-03 (3)
R. S. Day X5-54
D. W. Eide X1-86
D. A. St. John N1-28
R. J. Landon H0-02
P. J. Mackey H0-13
R. L. Martin X2-17
R. K. Stafford X1-86
J. G. Woolard H0-17
J. P. Zoric X5-57 (3)

DOE/RL
P. M. Pak H0-12
G. Richardson H0-12
A. E. Teimouri A5-15 (2)

THIS PAGE INTENTIONALLY
LEFT BLANK