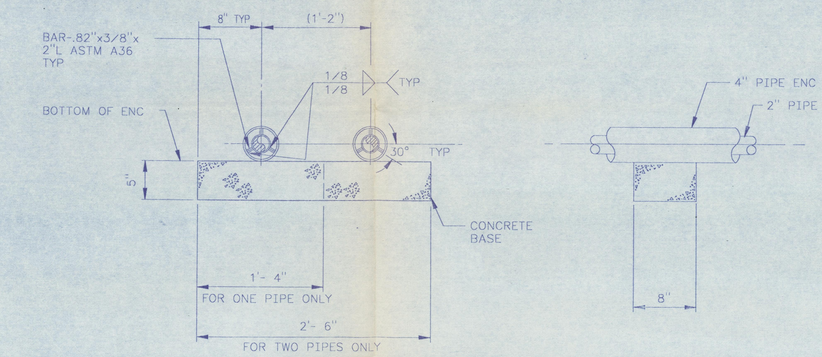

DETAIL 1 / H-2-77598

ENCASED PIPE ANCHOR SYMBOL

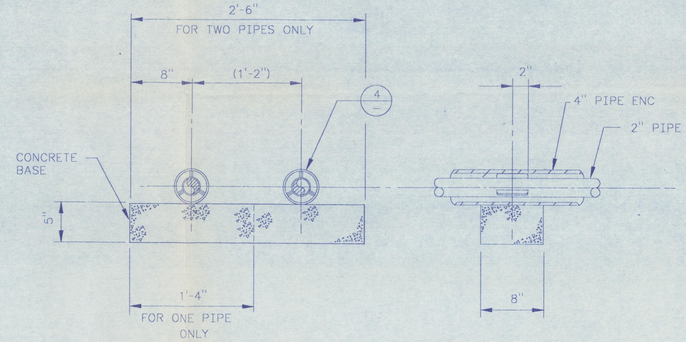

DETAIL 2 / H-2-77598 & H-2-77611 SH2

ENCASED PIPE GUIDE SYMBOL

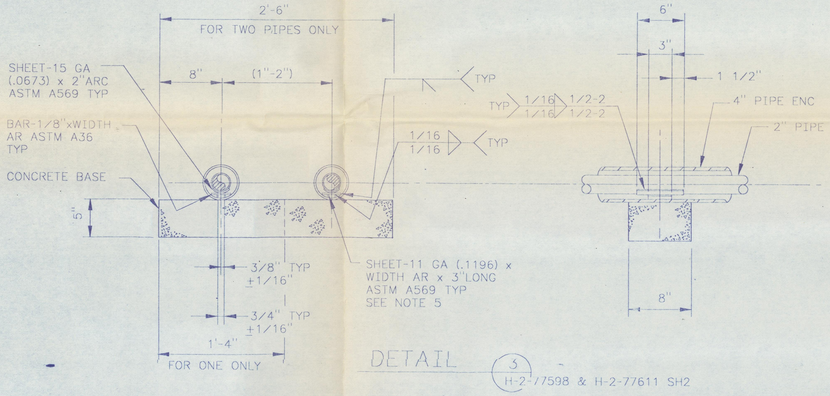

DETAIL 3 / H-2-77598 & H-2-77611 SH2

ENCASED PIPE SUPPORT SYMBOL

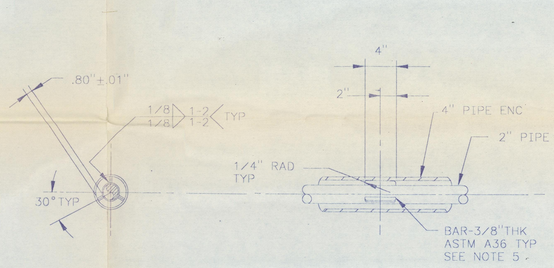

DETAIL 4

NOTES

1. FOR PIPING LOCATION AND ELEVATIONS SEE H-2-77596.
2. FOR GENERAL NOTES SEE H-2-77596.
3. ENCASEMENT SUPPORTS SHALL BE LOCATED AT ALL ENCASED PIPE SUPPORTS AND GUIDES AS SHOWN ON DWG H-2-77598.
4. DETAIL 5 TO BE USED AS REQUIRED TO SHIM PIPE CENTER LINE TO ELEVATION REQUIRED.
5. BREAK ALL SHARP EDGES AND REMOVE ALL BURRS.

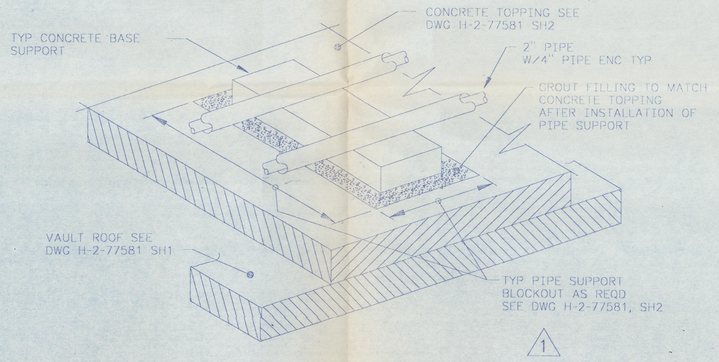

DETAIL 6 / H-2-77598

SCALE : NONE

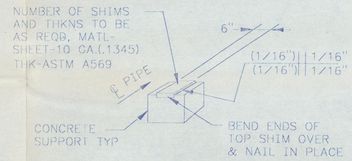

DETAIL 5

SCALE : NONE

DOES NOT CONTAIN CLASSIFIED OR UNCLASSIFIED CONTROLLED NUCLEAR INFORMATION

REVIEWING OFFICIAL/ADC: R.J. Parma

DATE: 11-28-90

A A JAN 1989 RECEIVED EDMC

CHARLES R. ZOBEL STATE OF WASHINGTON REGISTERED PROFESSIONAL ENGINEER

DRAWING TRACEABILITY LIST			
NUMBER	TITLE		

DRAWING LIST		
NUMBER	TITLE	REFERENCES
H-2-77573		

NEXT USED ON

REVISIONS						
MICROFILMED	BY-DATE			11-5-90 GD	B-714-22 Z A6, THRU B-714-61 GEN REV; INCORP ALL ECNs	RS 1
	WHC APPROVAL	KEH APPROVAL		REV BY DATE	DESCRIPTION	REV
COMMENT REVIEW						

		DATE
WHC APPROVAL	SR BRIGGS	12-28-1988
PROJ ENGR	JD CLOUD	12-28-1988
QA	GJ McCALLUM	8-4-1988
APPROVED BY	RM TIEN	8-4-1988
CAD MGR	DP/AC MINISTER	8-4-1988
APPROVED BY	CR7/JR COLLINS	8-4-1988
CHECKED BY	L. HALL	7-19-1988
DRAWN BY	FG RITCH	5-18-1988
DESIGNED BY	FG RITCH	5-18-1988
CAD FILE	B077599A	
CAD SYS	PJ/TRM:ACD2:10.0:NN	

IMPACT LEVEL 2 | EDT #101089

U.S. DEPARTMENT OF ENERGY
RICHLAND OPERATIONS OFFICE
KAISER ENGINEERS HANFORD COMPANY

M

PIPING SUPPORT DETAILS

PROJECT TITLE: GROUT VAULT PAIR 218-E-16-102 & 103

PROJ	WO	JOB
B-714	ER1060	242500

SCALE	BLDG	TNDEX
1 1/2"=1'-0"	218-E-16	8511

DRAWING NUMBER	SHEET	OF	REV
H-2-77599	1	1	1

KEHCAD (1=1) 1

(HI12487)