0059418

ISSUED BY
RPP-WTP PDC
INIT DATE 4 29-03

Document title: **Supplement to Radioactive Air Emissions Notice of Construction Permit Application for WTP**

Contract number: DE-AC27-01RV14136

Department: Environmental and Nuclear Safety

Author(s): J Su-Coker J Sipkowski

Brad Erlandson for J. Su-Coker

Principal author signature:

Document number: 24590-WTP-RPT-ENS-03-002, Rev 0

Checked by: B Erlandson

Brad Erlandson

Checker signature:

RECEIVED
MAY 16 2003
EDMC

Date of issue: April 28 2003

Issue status: Approved

Approved by: P Peistrup

Approver's position: Environmental Manager

Approver signature:

River Protection Project
Waste Treatment Plant
2435 Stevens Center Place
Richland, WA 99352
United States of America
Tel: 509 371 2000

**DOE/ORP-2003-10**

# History Sheet

| Rev | Date | Reason for revision | Revised by |
|---|---|---|---|
| A | 27 March 2003 | Draft for Review | J Su-Coker |
| 0 | 28 April 2003 | Initial Issue | J Su-Coker |

## Contents

1 Location ..... 1-i
2 Responsible Manager ..... 2-i
3 Proposed Action ..... 3-i
4 State Environmental Policy Act ..... 4-i
5 Process Description ..... 5-i
6 Proposed Radionuclide Controls ..... 6-i
7 Drawings of Controls ..... 7-i
8 Radionuclides of Concern ..... 8-i
9 Monitoring ..... 9-i
10 Annual Possession Quantity ..... 10-i
11 Physical Form ..... 11-i
12 Release Form ..... 12-i
13 Release Rates ..... 13-i
14 Location of the Maximally Exposed Individual ..... 14-i
15 Total Effective Dose Equivalent to the Maximally Exposed Individual ..... 15-i
16 Cost Factors of Control Technology Components ..... 16-i
17 Duration or Lifetime ..... 17-i
18 Standards ..... 18-i
19 References ..... 19-i

# Acronyms

| | |
|---|---|
| AHL | analytical hot cell laboratory equipment system |
| ANSI | American National Standards Institute |
| ARL | analytical radiological laboratory equipment system |
| APQ | annual possession quantity |
| ASME | American Society of Mechanical Engineers |
| BARCT | best available radionuclide control technology |
| BOF | balance of facilities |
| CAM | continuous air monitoring |
| CAP 88-PC | *Clean Air Assessment Package – Personal Computer* |
| CCB | change-out box |
| CFR | Code of Federal Regulations |
| COPC | constituent of potential concern |
| DF | decontamination factor |
| DOE | US Department of Energy |
| DOE-ORP | US Department of Energy, Office of River Protection |
| DOE-RL | US Department of Energy, Richland |
| DST | double-shell tank |
| DWPA | dangerous waste permit application |
| Ecology | Washington State Department of Ecology |
| EPA | US Environmental Protection Agency |
| ETF | Effluent Treatment Facility |
| HEME | high-efficiency mist eliminator |
| HEPA | high-efficiency particulate air (filter) |
| HLW | high-level waste |
| IHLW | immobilized high-level waste |
| ILAW | immobilized low-activity waste |
| LAW | low-activity waste |
| LERF | Liquid Effluent Retention Facility |
| LSM | locally shielded melter |
| MEI | maximally exposed individual |
| mrem/yr | millirem per year |

| | |
|---|---|
| NESHAP | *National Emission Standards for Hazardous Air Pollutants* |
| NOC | notice of construction |
| PEDE | potential effective does equivalent |
| PIC | potential impact category |
| PJM | pulsed jet mixer |
| PJV | pulse jet ventiation |
| PPE | personal protective equipment |
| PTE | potential to emit |
| RCW | Revised Code of Washington |
| RFD | reverse flow diverter |
| SBS | submerged bed scrubber |
| SEPA | *State (of Washington) Environmental Policy Act* |
| STAR | sector-averaging stability array |
| TEDE | total effective dose equivalent |
| TRU | transuranic |
| TSD | treatment, storage, and disposal |
| VOC | volatile organic compound |
| WAC | Washington Administrative Code |
| WDOH | Washington (State) Department of Health |
| WESP | wet electrostatic precipitator |
| WTP | Hanford Tank Waste Treatment and Immobilization Plant |

# Executive Summary

This document establishes a supplement to the radioactive air emission notice of construction (NOC) permit application that supports design changes associated with the Hanford Tank Waste Treatment and Immobilization Plant (WTP). The original radioactive air emission NOC was approved by the US Environmental Protection Agency (EPA) on 13 June 2002. The EPA's approval of the initial NOC allowed full construction and operation of the WTP with a previous design consisting of three low-activity waste (LAW) facility melters and one high-level waste (HLW) facility melter (3 + 1 melter configuration). This NOC application supplement is requesting EPA's approval on a redesigned WTP which will include two LAW melters and two HLW melters (2 + 2 configuration).

The WTP will consist of three main processes: pretreatment, LAW vitrification, and HLW vitrification. There will also be an analytical laboratory for analysis of samples collected from WTP processes. There will be a total of 21 emission units associated with the waste treatment processes. For the purposes of this permit application, the emission units are flues that will vent process emissions to the atmosphere. The emission units and their locations are identified in Table 1. Typical emission sources include process vessel ventilation, melter offgas, exhaust from fluidic transfer devices, exhausts from laboratory activities, and building ventilation. Section 5 of this submittal presents a discussion on the WTP processes and the associated emission units.

For each facility, most of the flues will be co-located within a stack structure. Therefore, the emissions from most of the flues will be vented from the same stack within each process facility. When a flue is not bundled within the stack structure, it will be located in the vicinity of the stack structure. The location coordinates for the main stack structure (and therefore, associated emission units) are provided in Table 1.

A total of 46 radionuclide constituents of potential concern (COPCs) were identified to be associated with the WTP feed streams. Sixteen of these radionuclides were identified as contributing greater than 99 % of the radioactivity in the tank waste. Radionuclides in process offgas, exhaust, and ventilation emissions may be present as particulates and aerosols, or as gases. Discussions on the physical forms and release forms of the radionuclide COPCs are shown in sections 11 and 12 of this submittal.

A top-down best available radionuclide control technology (BARCT) analysis has been performed for each source of radionuclide gases and particulate matter emissions within the WTP to select the appropriate controls for these emissions. As shown in Table 1, high-efficiency particulate air (HEPA) filters (single and dual-stage) are proposed as BARCT for the primary control of radioactive particulates and aerosols for all emission units. The pretreatment, LAW, and HLW offgas systems contain additional control equipment, which is included for a variety of reasons. For example, the offgases from LAW and HLW melters are characterized as high temperature streams, thus requiring quenching and mist elimination equipment to protect the HEPA filters during treatment of melter offgas. A caustic scrubber is proposed as BARCT for the control of $^{129}$I for the LAW melter offgas (emission unit LV-S3), and a silver mordenite adsorber is proposed as BARCT for the control of $^{129}$I for the HLW melter offgas (emission units HV-S3A and HV-S3B). Detailed descriptions on the proposed BARCT are available in section 6 of this submittal.

Dose modeling has been performed using an EPA-approved computer model (the *Clean Air Act Assessment Package - Personal Computer* [CAP88-PC] program) for estimation of dose from radionuclide emission releases to the atmosphere. The modeling was performed using agreed upon dose

assessment parameters, and using air dispersion parameters and radionuclide emission concentration estimates specific to the WTP emission units. The dose modeling determines the total effective dose equivalent (TEDE) to the hypothetical offsite maximally exposed individual (MEI). The worst-case dose modeling results locate the MEI due to WTP emissions along the Hanford property boundary. The MEI is an offsite receptor located 18.78 kilometers in the east-southeast direction from the WTP along the Columbia River.

Taking into account the removal of radionuclide emissions from the proposed offgas controls systems, the combined TEDE to the MEI from the WTP is estimated to be approximately 0.35 millirem per year (mrem/yr). The highest predicted abated TEDE is approximately 0.288 mrem/yr from the LAW vitrification plant. This is followed by the emissions from the HLW vitrification plant at approximately 0.05 mrem/yr. Section 15 of this submittal presents the resulting TEDE to the MEI, as well as the associated emission rates for each emission unit.

Descriptions of the WTP stack monitoring and sampling program are presented in section 9 of this submittal. The collected samples will be extracted and analyzed offline in the analytical laboratory in accordance with 40 CFR 61, Appendix B, Method 114.

**Table 1 Summary of WTP Emission Units and Results of the Radionuclide Control Analyses**

| Facility | Location | Emission Unit | Proposed Controls | |
|---|---|---|---|---|
| | | | Particulates and Aerosols[a], [b] | Radioactive Gas |
| Pretreatment | Latitude: 46° 33' 04.8 " N<br>Longitude: 119° 30' 17.1 " W | PT-S1 | HEPA | NA |
| | | PT-S2 | HEPA | NA |
| | | PT-S3 | HEPA<br>Caustic Scrubber<br>HEME | NA |
| | | PT-S4 | HEPA<br>Demister | NA |
| | | PT-C2[c] | HEPA (single) | NA |
| LAW Vitrification | Latitude: 46° 33' 01.2 " N<br>Longitude: 119° 30' 14.9 " W | LV-S1 | HEPA | NA |
| | | LV-S2 | HEPA | NA |
| | | LV-S3 | HEPA<br>SBS<br>WESP | Caustic Scrubber |
| | | ILAW-C2[c] | No controls[d] | NA |
| | | LV-C2[c] | HEPA (single) | NA |
| HLW Vitrification | Latitude: 46° 33' 00.7 " N<br>Longitude: 119° 30' 24.6 " W | HV-S1 | HEPA | NA |
| | | IHLW-S1 | No controls[d] | NA |
| | | HV-S2 | HEPA | NA |
| | | HV-S3A and HV-S3B | HEPA<br>SBS<br>HEME<br>WESP | Silver Mordenite Adsorber |
| | | HV-S4 | HEPA | NA |
| | | HV-C2 and HV-C2R[c] | HEPA (single) | NA |

**Table 1 Summary of WTP Emission Units and Results of the Radionuclide Control Analyses**

| Facility | Location | Emission Unit | Proposed Controls | |
|---|---|---|---|---|
| | | | Particulates and Aerosols[a], [b] | Radioactive Gas |
| Analytical Laboratory | Latitude: 46° 33 ' 05.5 " N Longitude: 119° 30' 11.7 " W | LB-S1 | HEPA (single) | NA |
| | | LB-S2 | HEPA | NA |
| | | LB-C2[c] | HEPA (single) | NA |

NA: not applicable

HEME: high efficiency mist eliminator

SBS: submerged bed scrubber

WESP: wet electrostatic precipitator

a Includes radioactive and non-radioactive particulates and aerosols.

b The proposed BARCT is dual HEPA filtration unless noted.

c The latitude and longitude location of the C2 air vent will be the same as the associated process stack.

d Incremental control with HEPA filter determined to be cost prohibitive.

# Contents

1 Location.....1-1

# 1 Location

Please see *Radioactive Air Emissions Notice of Construction Permit Application for the River Protection Project - Waste Treatment Plant* (24590-WTP-RPT-ENV-01-008, Rev 1).

# Contents

2 Responsible Manager.....2-1

# 2 Responsible Manager

The responsible manager of the WTP is as follows:

| |
|---|
| **Responsible Manager:**<br>Mr. R. J. Schepens |
| US Department of Energy, Office of River Protection |
| Post Office Box 450 |
| Richland, WA 99352 |
| (509) 376-6677 |

# Contents

3 Proposed Action ..... 3-1

# 3 Proposed Action

The purpose of the WTP is to convert radioactive and hazardous liquid waste from the Hanford double-shell tank (DST) system to a solid vitrified form (borosilicate glass) for final disposal at the Hanford Site or in a geologic repository. The WTP will be designed to produce a maximum of 56 metric tons per day of vitrified product.

The WTP represents construction of 21 new emission units. The purpose of this submittal is to provide information on the proposed WTP and predicted radionuclide emissions from these units to satisfy the WDOH requirements discussed in WAC 246-247-060 and Appendix A to chapter 246-247-110 of the WAC. This submittal is applicable over the nominal lifetime of the WTP of 40 years.

# Contents

4 State Environmental Policy Act .....4-1

# 4 State Environmental Policy Act

Please see *Radioactive Air Emissions Notice of Construction Permit Application for the River Protection Project - Waste Treatment Plant* (24590-WTP-RPT-ENV-01-008, Rev 1).

## Contents

**5 Process Description** ..... **5-1**

**5.1 Process Overview** ..... **5-1**

**5.2 Pretreatment Plant** ..... **5-2**
5.2.1 Emission Unit PT-S3 ..... 5-3
5.2.2 Emission Unit PT-S4 ..... 5-8
5.2.3 Emission Units PT-C2, PT-S1, and PT-S2 ..... 5-9

**5.3 LAW Vitrification Plant** ..... **5-12**
5.3.1 Emission Unit ILAW-C2 ..... 5-13
5.3.2 Emission Unit LV-S3 ..... 5-13
5.3.3 Emission Units LV-C2, LV-S1, and LV-S2 ..... 5-17

**5.4 HLW Vitrification Plant** ..... **5-21**
5.4.1 Emission Unit IHLW-S1 ..... 5-22
5.4.2 Emission Units HV-S3A and HV-S3B ..... 5-22
5.4.3 Emission Unit HV-S4 ..... 5-25
5.4.4 Emission Units HV-C2, HV-C2R, HV-S1, and HV-S2 ..... 5-25

**5.5 Analytical Laboratory** ..... **5-30**
5.5.1 Emission Unit LB-S1 ..... 5-31
5.5.2 Emission Unit LB-S2 ..... 5-32
5.5.3 Emission Unit LB-C2 ..... 5-33

**5.6 Balance of Facilities** ..... **5-34**
5.6.1 Central Waste Storage Area ..... 5-34
5.6.2 Out-of-Service Melter Storage Areas ..... 5-34
5.6.3 Other Balance of Facilities ..... 5-35

## Tables

**Table 5-1** Pretreatment Maintenance and Waste Management Activity Summary ..... 5-36

**Table 5-2** LAW Vitrification Plant Maintenance and Waste Management Activity Summary ..... 5-37

**Table 5-3** HLW Vitrification Plant Maintenance and Waste Management Activity Summary ..... 5-38

**Table 5-4** Analytical Laboratory Maintenance and Waste Management Activity Summary ..... 5-39

## Figures

Figure 5-1 WTP Simplified Flow Diagram ..... 5-40
Figure 5-2 Pretreatment Simplified Flow Diagram ..... 5-41
Figure 5-3 LAW Vitrification Simplified Flow Diagram ..... 5-43
Figure 5-4 HLW Vitrification Simplified Flow Diagram ..... 5-44
Figure 5-5 Pretreatment Plant Emission Units ..... 5-45
Figure 5-6 LAW Vitrification Plant Emission Units ..... 5-46
Figure 5-7 HLW Vitrification Plant Emission Units ..... 5-47
Figure 5-8 WTP Emission Unit Configuration - Top Views ..... 5-48
Figure 5-9 Typical Arrangement of a Reverse Flow Diverter ..... 5-49
Figure 5-10 Example Inbleed System: C3/C5 to C5 Inbleeds ..... 5-50
Figure 5-11 Example Bulge Inbleed System ..... 5-51
Figure 5-12 Analytical Laboratory Ventilation System Diagram ..... 5-52

# 5 Process Description

## 5.1 Process Overview

The Hanford Tank Waste Treatment and Immobilization Plant (WTP) is being developed to store and treat mixed waste from the Hanford Site double-shell tank (DST) system. The WTP will consist of three main processes: pretreatment, low-activity waste (LAW) vitrification, and high-level waste (HLW) vitrification. Additionally, an analytical laboratory will provide sampling and analysis support. A simplified WTP process flow diagram is shown in Figure 5-1. Double-shell tank waste will be received into the pretreatment plant where it will be separated into LAW and HLW feeds. The LAW feed will consist primarily of the aqueous phase supernatant containing soluble solids but with most of the transuranic (TRU) radionuclides and cesium removed. The HLW feed will primarily be an aqueous slurry with a higher solids content than the LAW feed. The pretreatment plant will concentrate the constituents of potential concern into the HLW feed. However, the process will not remove all of the constituents of potential concern. The LAW feed will still contain these constituents but at a lesser concentration. Figure 5-6 through Figure 5-4 present the simplified process flow diagrams for the pretreatment, LAW vitrification, and HLW vitrification plants, respectively.

Waste will be immobilized in the form of a glass matrix contained in stainless steel containers using two HLW melters and two LAW melters, with space for a third LAW melter. The annual throughput for LAW and HLW melters is 1825 metric tons per year (2010 US tons per year) and 2190 metric tons per year (2410 US tons per year), respectively. The throughput values are based on an average daily throughput of 50 metric tons per day (55 US tons per day) and 6 metric tons per day (6.6 US tons per day) operating at 365 days per year. The theoretical daily maximum throughput can be up to 60 metric tons per day (66 US tons per day) for the LAW melters. The expected annual quantities possession (APQ) of radioactivity in the feed are presented in section 10.

Offgas generated by the pretreatment and vitrification processes will be treated in independent offgas treatment systems. Offgas streams will include process vessel ventilation, melter offgas, and exhaust from fluidic transfer devices. The treated offgases from pretreatment, LAW, and HLW vitrification processes will be vented to the atmosphere through emission units. Additionally, each process plant will have building ventilation systems. Treated building air will be vented through dedicated emission units. Graphic representations of the emission sources and the associated emission units are shown in Figure 5-5 through Figure 5-7. The labeled emission units (PT-S1, etc.) represent emission units for the WTP. Figure 5-8 depicts the WTP emission unit makeup. It should be noted that Figure 5-5 through Figure 5-7 are simplified schematics of the emission sources and related emission units. Detailed building ventilation systems are shown in section 6, Figures 6-1 through 6-3, of this submittal.

The WTP will consist of 21 emission units. These emission units consist of the following: pretreatment (5 emission units), LAW vitrification (5 emission units), and HLW vitrification (8 emission units). Additionally, the WTP will have an onsite analytical laboratory to support process sampling and analysis activities. The analytical laboratory will have three emission units: LB-C2, LB-S1, and LB-S2. Laboratory emission units LB-C2, LB-S1 and LB-S2 will be within a single emission unit structure. The WTP will include support systems and utilities required for the waste treatment process. Those systems will be provided by the various areas collectively known as the "balance of facilities" (BOF). The BOF will not contain any emission units with radioactive air emissions.

Secondary waste streams such as liquid effluents or solid waste generated during waste processing, offgas treatment, or onsite laboratory generated waste will be recycled into the waste treatment process or transported to permitted Hanford Site facilities such as the Liquid Effluent Retention Facility (LERF) and Effluent Treatment Facility (ETF) for treatment, storage, and disposal. Detailed descriptions of secondary waste processes are addressed in chapter 10 of the *Dangerous Waste Portion of the Hanford Facility Resource Conservation and Recovery Act Permit for the Treatment, Storage, and Disposal of Dangerous Waste* (Dangerous Waste Permit)(WA7890008967), Attachment 51, section 4.2.1.

## 5.2 Pretreatment Plant

The pretreatment plant is designed to separate and prepare the LAW and HLW feeds for vitrification. After the receipt of the waste feed from the DST system, the waste feed evaporator separator vessels, which are forced-circulation vacuum evaporators, will concentrate the waste feed prior to ultrafiltration.

The evaporator offgas streams will be processed through condensers. The condensates will be collected and transferred to condensate tanks for discharge to the LERF and on to the ETF for subsequent treatment. The non-condensable gases will be routed to the pretreatment process vessel ventilation treatment system.

The ultrafiltration system will remove entrained solids from the concentrated waste feed. For certain waste feed, strontium and TRU compounds will be precipitated by adding reagents to the waste feed prior to ultrafiltration. The precipitate containing strontium and TRU compounds will be concentrated and washed in the ultrafiltration system before incorporation into the HLW feed. The liquid separated by ultrafiltration will be the LAW feed.

The LAW feed will pass through the cesium ion exchange system to separate the cesium from the LAW feed. The cesium concentrate will be blended with the solids from ultrafiltration prior to transferring to the HLW vitrification plant. The processed LAW stream from the ion exchange system will be further concentrated through the LAW melter feed evaporation system. The operation of the treated LAW evaporator separator will be similar to that of the waste feed evaporator separator vessels. The concentrated LAW feed will be transferred to the LAW vitrification plant.

The pretreatment plant will have five separate emission units: PT-C2, PT-S1, PT-S2, PT-S3, and PT-S4 (see Figure 5-5). The emission sources for emission units PT-C2, PT-S1, and PT-S2 will be pretreatment plant building ventilation. The emission sources for emission unit PT-S3 will consist of evaporator offgases and exhausts extracted from vessel vapor space. Reverse flow diverters (RFDs) and pulsed jet mixers (PJMs) are used within the pretreatment plant to transfer and mix the tank wastes. The emissions from RFDs and PJMs will be vented through emission unit PT-S4. The proposed radionuclide emission controls and emission rates are provided in section 6 and section 13 of this submittal.

Section 5.2.1 describes the emission sources that are vented through emission unit PT-S3. Section 5.2.2 describes the emission sources that are vented through emission unit PT-S4. Section 5.2.3 describes the maintenance and waste management activities. The emissions from those activities are vented through emission units PT-C2, PT-S1, and PT-S2.

### 5.2.1 Emission Unit PT-S3

#### 5.2.1.1 Waste Feed Receipt System (C5)

This system will be located within the C5 areas. The definition of C5 is provided in section 5.2.3. The waste feed receipt system will receive tank waste from the DST system and selected recycle streams from pretreatment waste processing. The waste feed receipt system will also facilitate sampling of the waste, provide lag storage, and transfer the waste feed for subsequent treatment within the pretreatment plant.

#### 5.2.1.2 Waste Feed Evaporation System (C5; Condensate Tanks are C3)

The waste feed evaporation system will include two evaporator trains arranged in parallel. The evaporator trains can be operated independently or at the same time, depending on the process needs.

The waste feed evaporator separator vessels will incorporate forced-circulation units operating under vacuum to reduce the operating temperature. Each of the waste feed evaporator separator vessels will have a pulsed jet agitation system to provide mixing and to prevent settling of entrained solids. The waste feed from the feed vessels will be pumped continuously to the evaporator.

The re-circulation pump will maintain a high flow rate within the evaporation system. The re-circulation pump will transfer the waste through the reboilers and back into the separator vessel. The re-circulating waste stream will be prevented from boiling in the reboiler tubes by maintaining sufficient hydrostatic head to increase the boiling point above the temperature of the liquor in the reboiler.

As the liquid travels through a reboiler, the hydrostatic head will diminish and flash evaporation will occur as the flow enters the separator vessel. The liquid will continue to flash to equilibrium, and the vapor and liquid streams will be separated. The liquid stream will be circulated in this loop and become more concentrated. The concentrated waste stream will be pumped out of the evaporator system to the ultrafiltration process system.

The historical decontamination factors from the Hanford Site 242-A evaporator were used to predict the performance of the waste feed evaporator separator vessels. Both the 242-A evaporator and the waste feed evaporator separator vessels are used to concentrate Hanford Site tank wastes. Both evaporators use a forced-circulation, vacuum evaporation-crystallization system, which is composed of common evaporation equipment such as recirculation vessels, reboilers, and condensers.

The operating temperature is the most important operating parameter that impacts evaporator performance. The waste feed evaporator separator vessels will be operated at the same temperature, 50 °C (122 °F), as the 242-A evaporator.

The other operating parameters that can impact evaporator performance are residence time and solid contents of the wastes. The 242-A evaporator has processed the wastes beyond the point of crystallization, so the evaporator pressure was approximately 0.7 pounds per square inch (psi). However, the waste feed evaporator separator vessels are not required to reach such a high degree of solids concentration. The waste feed evaporator separator vessels will only concentrate the dissolved solids concentration up to 8 to 10 M as sodium. Higher solids concentration in the 242-A evaporator originates from the precipitation of salt cake.

Based on the above reasons, the decontamination factors used for the waste feed evaporator separator vessels are expected to be higher than for the 242-A evaporator. However, the 242-A evaporator performance data can be used as a bounding estimate for emissions from the waste feed evaporator separator vessels.

#### 5.2.1.3 Ultrafiltration System (C5)

The ultrafiltration system will separate the solids from the evaporator effluent. During this process, two streams will be generated: a solids stream referred to as the HLW feed stream and an ultrafiltration permeate stream referred to as the LAW feed stream.

Ultrafiltration will receive waste feed in batch modes. Chemicals will be added to the waste mixture with heating and agitating, if required, to complex the TRU elements and strontium. The heating temperature will be less than 80 °C (176 °F), which is below the boiling points for all radionuclides. Since this temperature will be maintained, vaporization of radionuclides is not expected.

The waste stream will then be fed to the ultrafilters, which are long bundles of permeable tubes. The liquids (permeate) will pass through the permeable ultrafilter surface while the solids are retained. The ultrafiltration permeate is designated as the LAW feed stream, which will be further treated within the pretreatment plant prior to treatment through the LAW vitrification systems. The concentrated solids stream is designated as HLW feed, which will be stored at the pretreatment plant and blended with other HLW feed streams. This mixture will ultimately be processed through the HLW vitrification systems.

During waste processing, the permeability of the ultrafilters will diminish over time and the filters will become clogged and require cleaning. Cleaning of the ultrafilter trains can be accomplished by back-flushing with filter permeate and using chemical cleaning agents. Back-flush water will be combined with the main ultrafiltration permeate in the ultrafilter permeate vessels. The filter performance will be monitored to determine when cleaning is required. Ventilation offgas from the ultrafilter permeate vessels will be controlled by the process vessel ventilation system.

#### 5.2.1.4 HLW Lag Storage and Blending System (C5)

The HLW lag storage and blending system will receive the HLW feed stream from the ultrafiltration system. It will provide lag storage for the high solids slurry and will blend the HLW vitrification feed prior to processing in the HLW vitrification plant. The system will also provide for blending of cesium concentrate recovered from the LAW treatment process into the HLW feed stream prior to transfer to the HLW vitrification plant.

#### 5.2.1.5 Cesium Ion Exchange System (C5)

The primary function of the cesium ion exchange system is to remove cesium from the LAW feed stream. This will be accomplished using a series of ion exchange columns containing a resin that preferentially removes cesium. Elution of the cesium-loaded resin will be accomplished using dilute nitric acid. The cesium-loaded nitric acid will then be routed to the nitric acid recovery system where the eluant will be recovered for reuse and the cesium concentrated for processing in the HLW vitrification plant (see section 5.2.6).

The cesium ion exchange system will use four cesium ion exchange columns to remove cesium from the LAW feed stream. Three of the columns (a lead, a lag, and a polish column) will operate in the loading

cycle in series. The fourth column will operate in parallel to the other columns, and will be eluted and regenerated or have its spent-ion exchange media replaced. The column feeds will be rotated as needed so that:

- The lead column is taken offline for elution/regeneration/media replacement
- The lag column becomes the lead column
- The polish column becomes the lag column
- The regenerated column becomes the polish column

The polishing column will be used in the loading cycle to ensure removal of cesium to the level required.

The concentration of cesium in the treated LAW will be monitored. Loading operation will be switched to the next position when the cesium concentration in the effluent of the lead column reaches a predetermined breakthrough point, or if significant amounts of cesium are detected in the effluent of the lag column or in the effluent of the polishing column.

After a number of loading and regeneration cycles, the ion exchange column resin is expected to lose performance, and is termed "spent". The number of cycles incurred before the column resin is spent will depend on LAW feed constituents, operating temperatures, properties of the resin, and LAW feed throughput rates. The spent resin will be slurried out of the column to the spent resin collection and dewatering system (section 5.2.1.7). A slurry of fresh resin will then be added to the column as a bed replacement.

Resin flush solution and spent resin will be transferred to the spent resin collection vessels. Resin flush solution will occasionally purge to the waste feed evaporator separator vessels. When fresh resin slurry is added into the cesium ion exchange columns, the excess transport liquid has to be taken out of the vessels. This stream will be collected in the spent resin collection and dewatering system for use as resin removal flush solution. Spent resin collection vessels will be controlled by the process vessel ventilation system.

### 5.2.1.6 Cesium Nitric Acid Recovery System (C5)

The cesium nitric acid recovery system will recover nitric acid previously used for cesium ion exchange resin bed elution for reuse. During the process of regenerating the cesium ion exchange resin beds, eluate composed of cesium-bearing nitric acid will be fed to the cesium evaporators operating under reduced pressure. This reduced pressure lowers the operating temperature and minimizes corrosion. The stream will be recirculated from the evaporator to the steam-heated cesium concentrate reboiler. The cesium concentrated liquid in the evaporator will be routed to the eluate contingency storage vessel for blending and incorporation into the HLW melter feed stream.

The cesium nitric acid recovery system will be in standby mode when a cesium ion exchange column is not being eluted.

### 5.2.1.7 Technetium Ion Exchange System (C5)

WTP plans to remove the technetium ion exchange system in the near future.

### 5.2.1.8 Technetium Eluant Recovery System (C5)

WTP plans to remove the technetium eluant recovery system in the near future.

### 5.2.1.9 Spent Resin Collection and Dewatering System (C5)

The spent resin collection and dewatering system is designed to remove fully eluted spent resin from the cesium ion exchange columns in the cesium ion exchange process. Resin removal transport liquid is pumped from the spent resin collection system to the designated ion exchange column where it fluidizes the resin particles and carries them back to the spent resin collection system. In the spent resin collection system, the resin is sampled and sent either back to an ion exchange column for further elution (if found to be out of specification) or forward to a disposable resin dewatering container, as described below.

Spent resin is transferred through process piping directly into a shielded disposal/transport container located in a C5 area specifically designated for loading and dewatering the resin. After transfer into the container, the resin is dewatered and the container is sealed to meet applicable transportation and disposal requirements. Free release contamination levels are verified, then the filled and sealed container is placed on a cart and transferred via airlocks to the truck loading area on the east side of the building. The dewatering area is classified as a C5 area during container filling, but is downposted to a C3 area during vessel transferring. A crane in the truck loading bay is used to transfer the container from the cart to the transport vehicle.

### 5.2.1.10 Treated LAW Evaporation System (C5; Condensate Tanks C3)

The treated LAW evaporation system is designed to further concentrate the treated LAW feed from the cesium ion exchange system. This system will also process purge liquid from the LAW vitrification system submerged bed scrubbers (SBSs).

The treated LAW evaporator separator will be a forced-circulation unit operating under vacuum to reduce the process fluid temperature rise, as well as reduce fouling and scaling on the tubes of the reboilers. The expected temperature is approximately 50 °C (122 °F). The treated LAW feed from the cesium ion exchange system will be transferred to the treated LAW evaporation system. The SBS purge liquor from LAW vitrification will be received and neutralized prior to evaporation.

The two feeds to the treated LAW evaporator separator will be pumped continuously to the suction side of the re-circulation pump. The re-circulation pump will maintain a high flow rate around the evaporation system. The re-circulation pump will transfer the waste through the reboiler and back into the treated LAW evaporator separator. The re-circulating waste stream will be prevented from boiling in the reboiler tubes by maintaining sufficient hydrostatic head to increase the boiling point above the temperature of the liquor in the reboiler.

As the liquid travels through the reboiler, the hydrostatic head will diminish and flash evaporation will occur as the flow enters the treated LAW evaporator separator. The liquid will continue to flash to equilibrium, and the vapor and liquid streams will be separated. The liquid stream will circulate in this closed loop (becoming more concentrated), while the vapor stream will pass to the evaporator offgas system.

The concentrated waste stream will be pumped continuously out of the evaporator system. The concentrate off-take will be situated on the suction line of the re-circulation pump. The concentrated waste stream will be stored and processed through the LAW vitrification plant.

The historical decontamination factors from the Hanford Site 242-A evaporator (242-A evaporator) were used to predict the performance of the treated LAW evaporator separator.

Based on the reasons described in section 5.2.1.2, the decontamination factors used for the treated LAW evaporator separator are expected to be higher than those used for the 242-A evaporator. However, the 242-A evaporator performance data can be used as a bounding estimate for emissions from the treated LAW evaporator.

### 5.2.1.11 Plant Wash and Disposal System (C5)

The primary function of the plant wash and disposal system is to receive, store, and transfer effluent. It will collect plant wash, drains, and acidic or alkaline effluent from the pretreatment plant.

During operations, plant wash and drain effluents will be collected and mixed in with other effluents in the plant wash vessel prior to transfer. The solution will be analyzed for pH and excess acidic effluent will be neutralized. Effluents will be recycled to the waste feed evaporation system.

High-activity acidic and alkaline effluent is received, stored, and neutralized in the primary acidic/alkaline effluent vessel or the secondary acidic/alkaline effluent vessel prior to transfer. In both vessels, the acidic and alkaline effluents will be mixed to neutralize the effluents. The mixture will be analyzed and neutralized, if necessary. When the effluent meets the predetermined pH value, it will be transferred to the waste feed evaporation system for recycling.

The acid/alkaline effluent vessels primarily receive caustic scrubber purge from LAW vitrification and effluents from the cesium ion exchange system. The effluents are sampled and, if they meet acceptability requirements, they are sent to the radioactive liquid waste disposal system. If it does not meet the requirements, the effluent is sent to the treated LAW evaporation system.

The C3 floor drain collection vessel receives floor drain and floor sump effluents from C3 areas. The effluents are transferred to the plant wash vessel for treatment.

The HLW effluent transfer vessel receives HLW acidic wastes from HLW vitrification line drains from HLW vitrification/pretreatment plant interface lines and laboratory drains. These effluents can be transferred to the plant wash vessel to recover the effluents back into the process system.

The ultimate overflow vessel receives overflows from vessels in the pretreatment plant. Additionally, this vessel receives line drains and flushes. The vessel operating level is maintained below a predetermined level to allow the vessel to hold 30 minutes of overflow at the highest transfer rate within the plant.

### 5.2.1.12 Radioactive Liquid Waste Disposal System (C3)

The primary function of the radioactive liquid waste disposal system is to receive, store, and transfer contaminated liquid effluents. The radioactive liquid waste disposal system will receive low-activity radioactive and/or dangerous waste effluents.

The radioactive liquid waste disposal system primarily receives effluents from caustic scrubber purges from the LAW vitrification plant via the plant wash and disposal system, waste feed evaporator system, and the treated LAW evaporator system. These effluents are the condensed vapors removed from the waste streams. Liquid effluents from the systems will be recycled or discharged to the LERF and then transferred to the ETF.

#### 5.2.1.13 Radioactive Solid Waste Handling System (C3)

The purpose of this system is to provide a means to dispose of radioactive contaminated equipment. This system interfaces with in-cell handling, filter cave handling, and the spent resin dewatering system. The main functions that the radioactive solid waste handling system provides are:

- Lifting, holding, and transporting disposal containers
- Packaging disposal containers and preparing the containers for shipping
- Decontamination of waste and cleaning and remote monitoring of disposal containers
- Temporary shielding and confinement barriers

The system will handle failed process equipment, such as pumps and valves, filters, jumpers, and maintenance equipment.

### 5.2.2 Emission Unit PT-S4

Exhaust from the RFD/PJMs will be vented through emission unit PT-S4. The RFD/PJMs will be used within the pretreatment plant for metered transfer of liquids or slurries throughout the treatment process. An RFD does not need to be fully submerged in order to remove the contents of a vessel, and it maintains a small and predictable volume of tank contents following its use. Operation of the RFD is cyclical, following timed phases: suction phase, drive phase, and blowdown. Figure 5-9 is an illustration of a typical reverse flow diverter system.

Suction phase: In the suction phase, the secondary automatic valve A is open, admitting air to the suction jet pump. Valve B is shut and liquid is drawn from the supply tank through the RFD and into the charge vessel. The suction ejector is designed so that it cannot produce a vacuum capable of lifting liquid higher than a certain value known as the "suction lift". After a short time, the liquid reaches this "suction lift" height and stops, then valve A is shut.

Drive phase: When valve A is shut, valve B is opened, admitting air to the drive nozzle. Air passes through the nozzle and pressurizes the charge vessel. Liquid is forced across the RFD and into the delivery pipe. The delivery pipe is quickly filled with liquid that flows into the delivery vessel.

Blowdown phase: When the charge vessel is nearly empty, valve B is shut; no air is supplied to either jet pump. The compressed air in the charge vessel passes back through the paired jet pumps, down the vent pipe, and into vessel vent system.

Shortly after blowdown begins, the pressure in the charge vessel falls below the delivery head and the flow of liquid into the delivery vessel is halted. The liquid in the delivery vessel then falls back down the pipe, across the reverse flow diverter, and into the charge vessel. After a short time, the pressure in the charge vessel falls to zero (gauge). The cycle is now complete.

The exhausts for the pulse jet ventilation (PJV) system originate from the operation of the RFDs and the PJM pulse tubes located below the liquid level in the process vessels. These fluidic devices use motive compressed air to lower and raise the level of liquid in the charge vessels located within the process vessel for the purpose of mixing using PJMs and fluid transfer via RFDs. Even though the total flow of air from all the RFDs and PJMs is significant, only a small fraction of this air passes through the charge vessels, the remainder being the motive air for the suction jets used to draw suction on the charge vessels.

Compressed air supply to the jet pumps used for the fluidic mixing devices for the process vessels pushes the liquid out to the lower operating level in the charge vessel during the mixing drive cycle or the RFD drive phase. The gases from the charge vessel are exhausted during the suction cycle by another jet pump to the RFD/PJM exhaust header so that the operating level will rise to the upper limit in the charge vessel. The combination of the suction and discharge cycles provides the required mixing in the process vessel. A more detailed description of the operation of the fluidic equipment is provided in the attachment to this response.

Controls are provided for the compressed air supply to the RFD/PJMs to avoid a flow surge into the vapor space inside the process vessel, referred to as "overblow". The air lines in the air supply racks that vent the PJMs and RFD charge vessels have pressure sensors to control the airflow. These pressure sensors detect the significant difference in backpressure that occurs at the point when air instead of liquid flows through the PJM nozzle or RFD line. The pressure sensors then send a signal to close the drive air supply valves and alert the operator of the overblow situation. Once detected, the cycle is adjusted to avoid overblow on subsequent cycles.

The time that the air blows into the vessel is a matter of a few seconds. The quantity of air that discharges to the vessel during an overblow is insignificant relative to the capacity of the vessel vent system, and therefore has no significant operational impact or potential to emit.

### 5.2.3 Emission Units PT-C2, PT-S1, and PT-S2

The building ventilation zones for the pretreatment plant will be divided into four numbered zones: C1 to C5 (C4 is not used). The higher number indicates greater contamination potential and, therefore, a requirement for a greater degree of control or restriction. Zones classified as C5 will have the potential for the greatest contamination. Zones classified as C1 will be those areas that have no risk of contamination, such as equipment rooms and offices. The emissions from C2, C3, and C5 areas will be vented through emission units PT-C2, PT-S1, and PT-S2.

Confinement will be achieved by maintaining the lowest pressure for areas with greatest contamination, with airflows cascading from least to most contaminated areas. The principle of a cascade system, in which air passes through more than one ventilation zone, effectively reduces the number of separate ventilation streams, hence the amount of air requiring treatment.

The confinement provided by physical barriers, such as walls or airlocks, is enhanced by the ventilation system, which creates a pressure gradient and causes air to flow through engineered routes from an area of lower contamination potential to an area of higher contamination potential.

#### 5.2.3.1 Emission Unit PT-C2

The exhaust from the C2 ventilation system is vented through emission unit PT-C2. A portion of the air supplied to the C2 areas will be cascaded into adjacent C3 areas with the rest being directly exhausted by

the C2 exhaust system. C2 areas can normally be accessed in street clothes, and do not require personal protective equipment. The C2 exhaust system fans are interlocked with the C5 fans and will shut down in the event of a failure of the C5 exhaust system to prevent flow reversal.

The C2 ventilation system serves the non-process operating areas, such as hallways, instrument control and instrumentation room, and electrical and mechanical equipment rooms. Access from C2 areas into a C3 area will be via a C2/C3 subchange room. Therefore, the majority of C2 designated areas have no potential to emit radioactive emissions. However, radioactive emissions may result from C2 areas that are used as transport path for packaged secondary wastes to the outside or failed equipment to the C3 maintenance workshop. C2 activities that have the potential to emit radioactive emissions are listed below.

- Transport of bagged failed manipulator for repair within C3 workshop
- Transport of containerized failed equipment for repair within C3 workshop
- Transport of containerized failed equipment for storage at the BOF
- Transport of containerized miscellaneous wastes for storage at the BOF
- Transport of personal protection equipment (PPE)
- Transport of process samples via autosampler
- Filter changeout, aerosol testing, and transport of spent filters
- Fan maintenance

### 5.2.3.2 Emission Unit PT-S1

The exhaust from the C3 ventilation system is vented through emission unit PT-S1. The C3 ventilation system serves areas such as filter plant rooms, exhaust fan rooms, bulge rooms, workshops, maintenance areas, and monitoring areas. The emissions from those areas are vented through emission unit PT-S1 or cascaded into C5 areas and then vented through emission unit PT-S2.

Access into a C3 area will be via a C2/C3 subchange room. For C3 areas such as those described above, air will be cascaded from C2 areas, through transfer grilles in the C2/C3 subchange room, and into the C3 areas. When a sufficient amount of air cannot be cascaded into a C3 area, a dedicated C2 supply may be provided with a damper on the C2 supply duct, which will close in the event of a loss of C3 extract.

C3 designated areas such as the bulge rooms and maintenance areas that have more potential for contamination are cascaded directly into neighboring C5 areas via filtered inbleeds. These specific C3 areas are described as part of the C5 ventilation system (see section 5.2.3.3). The C3 exhaust system fans are interlocked with the C5 exhaust fans and will shut down in the event of a failure of the C5 exhaust system.

Table 5-1 is a list of locations and planned activities within the C3 areas. This table also identifies the C3 areas that cascade into C5 areas. As shown in Table 5-1, most of the activities will be completed in areas that cascade to the C5 ventilation system.

### 5.2.3.3 Emission Unit PT-S2

The exhaust from the C5 ventilation system is vented through emission unit PT-S2. The C5 ventilation system serves the process areas of the facilities where radioactive waste materials are stored and handled.

To help maintain contamination control, the pressure within C5 areas is maintained at a lower level than C2 or C3 areas.

The areas served by the C5 ventilation system receive air via engineered inbleeds designed to cascade a given amount of air necessary to meet the design needs. The primary purpose of this cascade ventilation system is to enhance control and confinement of radioactive materials provided by the building structural barriers or other process enclosures. Additional design criteria affecting the amount of airflow include removal of space heat loads. Confinement is also enhanced by maintaining the C5 areas at a significantly greater negative pressure with respect to all other areas. The inbleed systems provide a passive design feature that allows these pressure differentials to be established, which, in turn, also allows the cascade system to function.

Inbleed systems vary in complexity depending on the type of system served, size of the system, and functional design requirements. Components may include balancing and isolation dampers (or a valve on smaller systems) and associated ductwork (or piping on smaller systems). The inbleed isolation dampers are used to isolate the inbleed housing during filter changes. In addition to the functions described above, the inbleed systems may be used to provide supplementary cooling and fire boundary isolation. When serving these functions, cooling coils, fire dampers, and smoke-actuated or gravity backdraft dampers are included in the system. Inbleed systems are used in a variety of locations including personnel access points (C2/C3 subchanges) to C3 areas that cascade to C5 areas, valve and pump bulges, and gloveboxes. Typically, the subchange cascade flow from C2/C3 to C3/C5 will be a minimum of 2100 cubic feet per minute (cfm). However, the flow rates for other inbleed systems such as the bulge inbleed from C3 to C5 will vary.

To enhance the C5 ventilation system reliability and minimize the possibility for contamination migration to zones of lesser contamination potential (due to flow reversals), the C5 exhaust fans are provided with a source of backup power. The C5 exhaust fans are also interlocked to the exhaust fans serving the C3 and C2 areas of the building. This interlock shuts the C3 and C2 exhaust fans down upon loss of C5 exhaust fan service. Likewise, the C3 and C2 exhaust fans will not start without an operating C5 exhaust system. C5 area differential pressures are monitored and maintained to established setpoints by a ventilation control system, adjustable speed fan drives, and modulating volume control dampers. See Figure 5-10 and Figure 5-11 for examples of the inbleed systems.

The following sections describe the emission sources within C3 or C5 areas that are vented through emission unit PT-S2.

#### 5.2.3.3.1 Pretreatment Plant Hot Cell

The pretreatment hot cell will be located in the central portion of the pretreatment plant, and will stretch nearly the entire length of the building.

The process equipment will be remotely handled in case of failure and be removed by an overhead crane or powered manipulator. Manipulators assist in the decontamination and remote repair. The unit also contains a crane and powered manipulator repair area. The failed equipment will be placed inside containers and transported through a series of airlock and shield doors to a truck load area on the outside of the building.

Process equipment, such as pumps, valves, jumpers, and filters, will be located in this area. Activities performed in this area will include the removal and staging of failed, remote-handled process equipment

prior to decontamination, repair, and packaging of waste for disposal. Jumpers connecting process equipment may leak waste when the jumper connection is broken.

#### 5.2.3.3.2 Pretreatment Plant Filter Cave

The pretreatment filter cave will contain HEPA filters and high efficiency mist eliminators (HEMEs) filters. The cave is located in the southeast corner of the building at the 56-foot (ft) level.

Within the filter cave, an overhead crane or power manipulator is used to change out HEPA and HEME filters, transport in-cave equipment, and handle any tooling necessary to perform maintenance and operational tasks.

Additionally, a dedicated hands-on equipment maintenance area will be located at the east end of the cave. This area is separated from the filter cave by a set of equipment access shield doors. The area contains access platforms, decontamination equipment, fixtures, and tooling necessary to perform identified maintenance activities and also serves as an access route for importing clean filters into the cave. The overhead crane or power manipulator will be parked in the maintenance area when not being used in-cave.

Spent filters and HEME elements are size-reduced into a disposal container prior to being exported from the cave. The disposal container is lowered through an access hatch in the floor of the cave and into a waste drum. The drum is then lidded, swabbed, and assayed prior to being exported from the building.

#### 5.2.3.3.3 Pretreatment In-Cell Maintenance and Decontamination

Remote-controlled maintenance activities will be performed in the in-cell maintenance and decontamination area. The activities performed within this area will include equipment decontamination, equipment disassembly, and size reduction. Failed equipment may be placed into a container for disposal or transported to the C3 workshop area for repair.

#### 5.2.3.3.4 Pretreatment Plant C3 Workshop

Hands-on equipment maintenance, including decontamination, size reduction, and packaging of spent equipment, may be performed in the C3 workshop. This area will consist of the interim storage, lag storage, manipulator decontamination and repair, waste packaging, tool cribs, and subchange rooms. This area will include hatches to import or export spent equipment. An overhead crane will facilitate movement of equipment and removal or placement of the spent equipment in the waste containers. Table 5-1 outlines activities performed in the pretreatment plant C3 workshop.

## 5.3 LAW Vitrification Plant

The function of this system is to convert blended waste slurry and glass formers into molten glass. The LAW melter system design is based on operating two joule-heated ceramic melters and associated systems. The average annual throughput for the LAW melters under this submittal is 1825 metric tons per year (2010 US tons per year). Sections 5.3.1 through 5.3.4 describe the LAW vitrification processes.

The LAW vitrification plant will have five separate emission units: ILAW-C2, LV-C2, LV-S1, LV-S2, and LV-S3 (see Figure 5-6). The emissions from the ILAW container storage area are vented through emission unit ILAW-C2. Emission units LV-C2, LV-S1, and LV-S2 will consist of exhausts from plant

building ventilation systems. The emission source for emission unit LV-S3 is offgases from LAW melter and process vessels. The proposed radionuclide emission controls and emission rates are provided in section 6 and section 13 of this submittal.

Section 5.3.1 describes the emission sources that are vented through emission unit ILAW-C2. Section 5.3.2 describes the emission sources that are vented through emission unit LV-S3. Section 5.3.4 describes the maintenance or waste management activities performed in the LAW vitrification plant. The emissions from those activities are vented through emission units LV-C2, LV-S1, and LV-S2.

### 5.3.1 Emission Unit ILAW-C2

After lidding and decontamination, the immobilized LAW (ILAW) containers will be swabbed and surveyed for loose surface contamination prior to transport to the ILAW container storage area. The ILAW containers will remain in storage until they are shipped to the disposal location. The ILAW containers are considered sealed sources. The emissions from residual surface contamination on the ILAW containers are vented through emission unit ILAW-C2.

### 5.3.2 Emission Unit LV-S3

#### 5.3.2.1 LAW Melter Feed System (C5)

Treated LAW feed will be analyzed to determine the glass additive formulation for the conversion of the waste to glass. The glass additives specified in the formulation will be weighed and blended in the LAW glass former feed system, and subsequently mixed with the treated LAW waste. The LAW glass former feed system has no potential to emit radioactive air emissions. The mixture of glass formers and treated LAW waste becomes the LAW melter feed.

The LAW melter feed will be transferred to each melter by air displacement slurry pumps. The pumps will transfer the slurry from the feed vessel to the melter utilizing air as the motive force. The melter feed nozzles will be installed in the melter lid for introduction of slurry over the melt pool cold cap. Each feed nozzle will be individually supplied from a separate pump to reduce the likelihood of line plugging. The feed nozzles will be water-cooled to prevent drying the feed before it reaches the melter. Water flushes will be used to clear the feed lines as necessary.

The feed rate to the melter pool will be determined based on the average plenum temperature in the melter. The plenum temperatures will be controlled in the range of between approximately 300 °C to 500 °C (572 °F to 932 °F). The plenum thermocouples will be used to monitor plenum temperature and change the rate of feeding to the melter.

#### 5.3.2.2 LAW Melters (C5)

Each of the two LAW melters will have a single internal molten glass chamber with a rectangular surface area. The melters will be lined with refractory material designed to withstand corrosion by molten glass. The energy for the melt will be delivered by three sets of electrodes mounted on opposite walls of the glass pool. The glass will be discharged through either of two discharge chambers located within one of the long axis walls of the melter. The lid of the melter will be composed of a layer of refractory backed by a corrosion-resistant metal plate and support structure. The lid will also support the components that will be submerged in the melt pool and suspended in the melter plenum.

Melter Containment System

The refractory will be part of the melter containment and can be thought of as two separate sections. One section will be the refractory in contact with the molten glass pool, and the other refractory section will surround the gas space above the glass pool, which is commonly referred to as the plenum. The glass pool refractory, in conjunction with active cooling provided by a water jacket, will provide glass containment, thermal insulation, and electrical isolation. There is a steep temperature gradient through the refractory that "freezes" glass midway within the refractory wall. The refractory is held under compression with special bolts so that no gaps exist in the joints that would allow molten glass penetration. The plenum refractory will be primarily designed to resist thermal shock, resist corrosion by offgases, and resist corrosion by splashed feed and glass. There are two refractory thermowells to monitor the condition of the melter structure. The thermowells are located at a joint between the two refractory layers. The containment shells are designed to prevent glass leaks in the unlikely event of refractory failure.

The primary corrosion controls within the LAW vitrification plant are temperature control and material selection. For example, sulfate will be diverted into the LAW melter feed and is thus a corrosion concern primarily in the LAW melter. The glass compositions have been designed so that most of the sulfate is incorporated into the glass. However, $SO_2$ gases will still be evolved from decomposition of sulfate in the cold cap region. Because of this exposure, the metal type used in these areas will be resistant to sulfur corrosion. The melter bubblers and level detection tubes will be constructed of sulfur corrosion resistant materials, such as Inconel 690.

High temperature sulfate corrosion may be a concern in the melter and the film cooler. However, under normal operating conditions, the offgas temperature within the film cooler will be less than approximately 316 °C (600 °F), which is below the temperature at which sulfate corrosion occurs. It should be noted that condensation is not expected because the temperature will normally be greater than 120 °C (250 °F). Therefore, corrosion from liquid acids will not be a concern within the film cooler.

Acidic solutions will be present within an SBS and the associated condensate vessels. These vessels will be constructed of Hastelloy C-22. The SBS waste collection vessel will be constructed of a 6 % molybdenum alloy and the associated cooling jackets will be constructed of 304 L stainless steel. The wet electrostatic precipitator (WESP), which is downstream from the SBS system, will also be constructed of a 6 % molybdenum alloy. The 316 L stainless steel will be used for the construction of all components downstream from the WESP. Hastelloy, molybdenum alloy, and 316 L stainless steel are known to be resistant to pitting and stress corrosion. Uniform corrosion is expected to be negligible within the LAW vitrification plant based on operating conditions and planned vessel materials of construction.

The LAW melters will operate under a cascaded ventilation system. The melter plenum will be maintained at a vacuum with offgas system blowers and controlled injection of air into the offgas line near the melter exhaust. The flowrate of the injection air will be automatically controlled, based on melter plenum pressure, so that a relatively constant melter pressure is maintained even as the melter offgas generation rate fluctuates. This will ensure containment and avoid pressurization.

The melter shell will also contain a set of drains located in the baseplate, one in the space between the shell and the enclosure and one between the shell and the glass pool refractory. The drains will prevent the backup of water in the event of a cooling water leak or the uncontrolled addition of water from other

sources. Each drain will have a sealing mechanism to prevent the inward flow of air due to melter vacuum and a leak detection system.

The LAW melter will be enclosed with welded steel plate. Shielding will be incorporated by increasing the bottom plate thickness. Access panels will be provided in the enclosure. When removed, these panels will allow access to the jack-bolts, electrodes, electrode thermocouples, and viewing cameras. Access panels will only be opened during cold commissioning. The melter enclosure consists of the lid and baseplate as well as the structure needed to support the lid and provides a gas barrier between the refractory and the enclosure. The melter enclosure will be designed to allow operation of the melter at a negative pressure with air in-leakage from the annular space surrounding the melter. The annular space is the space between the LAW melter and the melter enclosure. This air within the annular space is a C5 area and is ventilated to the C5 ventilation system. The air in-leakage to the melter is caused by the pressure differential between the annular space and the melter. The air in-leakage minimizes the likelihood of deposition of corrosive materials, that is, sodium borate, sodium chloride, and lithium borate, inside the spaces between the gas barrier and the refractory.

Joule Heating

The heat for melter startup will be provided by temporarily installed radiant electric heaters mounted through the lid of the melter. These heaters will melt the starter charge of frit sufficiently to make it conductive between the melter's joule-heating electrodes. When a conducting path is established, the melter will be heated in a controlled manner by passing more and more current between the electrodes through the glass (a process known as joule-heating). When the melter reaches the operating temperature, the startup heaters will be removed and slurry feeding will start.

No radioactive air emissions will be generated when the radiant heaters are removed after initial startup because the process fluid is not radioactive. Removal of the heater from the melter is performed with an air sweep into the melter that prevents significant releases of nonradioactive contaminants. The air sweep is drawn into the offgas system.

The joule-heating system will contain the melter electrodes, melter electrode power supplies, melter glass pool thermocouples, and the melter electrode control system.

The electrode configuration for each LAW melter will consist of three pairs of plate electrodes mounted parallel to each other on the long axis of the melter. The electrodes will have forced-air-cooled electrode extensions. The extensions will penetrate the side of the melter below the glass level to minimize the effects of thermal expansion and to minimize the potential for sulfate corrosion. Active cooling of the extensions and the use of a water-cooling jacket will prevent glass from migrating through the refractory package adjacent to the electrode extension penetrations. Power to the electrodes will be single-phase alternating current applied across opposing electrodes. The nominal melter glass pool temperature is 950 °C to 1250 °C (1742 °F to 2282 °F). This will be measured with thermocouples in thermowells submerged into the pool at various locations. The power to the electrodes will be regulated to maintain the temperature at the nominal value.

Glass Discharge System

Each LAW melter will have two identical and independently operated glass discharge systems located adjacent to each other on a long side of the melter. The glass discharge systems will include the melter

glass level detectors, canister glass level detection, riser, airlift lance, trough, and a heated discharge chamber.

The glass discharge from the melter will be initiated by injecting air or an inert gas at the bottom of the airlift riser. As the gas disengages in the glass it will entrain glass in the riser to the inlet of the trough. The glass will then flow into the waste container. The rate of glass discharge will be controlled by adjusting the rate at which the air and gas mixture is injected into the bottom of the riser.

The starting and stopping of the glass discharge will be based on the level of glass in the melter. It is desired to maintain the glass level in the melt pool to within an approximate 2-inch band to reduce thermal stresses on the refractory. Glass discharge operations will be monitored using a camera system to observe the glass pour stream. The level in the waste canister will also be monitored to prevent overfilling.

LAW Container Pour Handling System

Each of the two LAW melters will have two glass discharges that operate independently. Each melter discharge will be provided with a glass pour cell under the melter cell and associated features for filling a container with the glass. The melter will normally alternate filling containers in each pour cell. After a container is filled in one pour cell, the melter will begin filling the next container in the other pour cell, although containers can be filled in the same pour cell. Each pour cell will be physically isolated from the others for maintenance access. The container pour handling system will handle and position product containers for filling with ILAW. The major pieces of equipment include the container turntable, container elevator, wheeled transfer carts, and monorail hoists.

Container Turntable, Container Elevator, Glass Pour Seal Head

A container turntable will be provided in each pour cell for handling containers. The turntable can accommodate three containers and rotates to position them at three stations: the container import and export station, the container fill station, and the container cooling station. At each container location in the turntable there will be a lower overpack section that will locate the containers and provide support. Containers remain in the overpack during the elevating and glass filling cycle.

After containers are filled and cooled, the turntable rotates to the import and export station where container changeout will occur. The cooled, full product containers will be removed from the turntable and replaced with empty containers. Once the empty container's lid has been removed, the turntable will be rotated to position the empty container at the fill station. The container elevator will raise the empty container and lower overpack up to the glass pour seal head for container filling. At the upper position a lock bolt will be engaged to maintain elevator position during the container fill cycles.

The elevator will be equipped with features to provide a weight of the product container being supported. Weight measurements will be used to verify that a container is present and that it is not full of glass. The weight must be between established minimum and maximum values for glass pouring to occur. Additionally, the weight measurement can indicate that container filling is occurring and provide the rate of glass pouring. The elevator weight measurement is not intended to give an accurate weight of the container; it is merely used as an indication of container presence and condition.

The glass pour seal head will be the interface between the melter discharge and the product container during glass pouring. The seal head will consist of metal bellows that are connected to the melter

discharge, with the other end of the bellows open for connection to product containers. During the time that containers are filled and awaiting welding of a permanent lid, the containers are unsealed within a C5 ventilation area.

The container will be filled using several pours. The pour process will occur more quickly than glass can be made in the melter, resulting in lag time between pours. Rapid pouring will allow molten glass to flow out to all edges of the container. Following the final glass pour batch, the container will remain in position to provide initial container cooling and containment of final glass discharges. The elevator lock will then be retracted and the container lowered to the turntable. The turntable will again be rotated, placing the recently filled container at the cooling station. The container cooling will continue while another container undergoes the fill cycle. Once cooled, the container will be rotated back to the import and export station and the process will be repeated.

The decontaminated glass containers will be swabbed and surveyed for loose surface contamination prior to transport to the ILAW container storage area. If contamination exceeds the target levels, the container will be reworked through $CO_2$ decontamination process or a fixative will be applied to the outer surface of the container prior to transport to the ILAW container storage area. The ILAW containers will remain in storage until they are shipped to the disposal location.

### 5.3.3 Emission Units LV-C2, LV-S1, and LV-S2

The building ventilation zones for the LAW vitrification plant will be divided into four numbered zones: C1 through C5 (C4 is not used). The higher number indicates greater contamination potential and, therefore, a requirement for a greater degree of control or restriction. Zones classified as C5 will have the potential for the greatest contamination. Zones classified as C1 will be those areas that have no risk of contamination, such as equipment rooms and offices. The emissions from C2, C3, and C5 areas will be vented through emission units LV-C2, LV-S1, and LV-S2, respectively.

Confinement will be achieved by maintaining the lowest pressure for areas with greatest contamination potential, with airflows cascading from least to greatest contamination potential. The principle of a cascade system, in which air passes through more than one ventilation zone, effectively reduces the number of separate ventilation streams and, hence, the amount of air requiring treatment.

The confinement provided by physical barriers is enhanced by the ventilation system, which creates a pressure gradient and causes air to flow through engineered routes from an area of lower contamination potential to an area of higher contamination potential.

#### 5.3.3.1 Emission Unit LV-C2

The exhaust from the C2 ventilation system is vented through emission unit LV-C2. A portion of the air supplied to the C2 areas will be cascaded into adjacent C3 areas with the rest being directly exhausted by the C2 exhaust system. C2 areas can normally be accessed in street clothes, and do not require personal protective equipment. The C2 exhaust system fans are interlocked with the C5 fans and will shut down in the event of a failure of the C5 exhaust system to prevent flow reversal.

The C2 ventilation system serves the non-process operating areas, such as hallways, instrument control and instrumentation room, and electrical and mechanical equipment rooms. Access from C2 areas into a C3 area will be via a C2/C3 subchange room. Therefore, the majority of C2 designated areas have no potential to emit radioactive emissions. However, radioactive emissions may result from C2 areas that

are used as transport path for packaged secondary wastes to the outside or failed equipment to the C3 maintenance workshop. C2 activities that have the potential to emit radioactive emissions are listed below.

- Transport of bagged failed manipulator for repair within C3 workshop
- Transport of packaged failed melter for storage at the BOF
- Transport of packaged melter consumables
- Transport of containerized failed equipment for storage at the BOF
- Transport of containerized miscellaneous wastes for storage at the BOF
- Transport of process samples via autosampler
- Transport of PPE
- Filter changeout, aerosol testing, and transport of spent filters
- Fan maintenance

### 5.3.3.2 Emission Unit LV-S1

The exhaust from the C3 ventilation system is vented through emission unit LV-S1. The C3 ventilation system serves areas such as filter plant rooms, exhaust fan rooms, bulge rooms, workshops, maintenance areas, and monitoring areas. Access into a C3 area will be via a C2/C3 subchange room. For C3 areas such as those described above, air will be cascaded from C2 areas, through transfer grilles in the C2/C3 change room, and into the C3 areas.

When a sufficient amount of air cannot be cascaded into a C3 area, a dedicated C2 supply may be provided with a damper on the C2 supply duct, which will close in the event of a loss of C3 extract. The C3 exhaust system fans are interlocked with the C5 exhaust fans and will shut down in the event of a failure of the C5 exhaust system.

There are also C3 designated areas that are not vented through the C3 ventilation system. Instead, these C3 areas cascade directly into a neighboring C5 area. These specific C3 areas are more correctly described as part of the C5 ventilation system (section 5.3.4.3). These C3 areas are listed in the description of the C5 ventilation system, emission unit LV-S2. Examples include the cart and crane maintenance areas in the LAW vitrification plant.

Table 5-2 is a list of locations and planned activities within the C3 workshop areas. Activities performed in this area will include decontamination, size reduction, and packaging of spent equipment. Simple decontamination of components will be performed to allow contact handling. Waste streams generated within the workshop will be volume-reduced as necessary by means of disassembly or other suitable means to fit standard packaging such as drums or boxes.

Other emission sources to emission unit LV-S1 are described below.

#### 5.3.3.2.1 LAW LSM Gallery

The LAW locally shielded melter (LSM) gallery will house two LAW melters. This area is located in the south side of the plant. The emission from this area will be vented through C3 air ventilation system.

The LAW melter is contained within a shielded metal enclosure that is integral to the melter while it is active and out-of-service.

When the LSM has reached the end of its operating life, it will be disconnected from all systems. Prior to being moved out of the LAW vitrification plant on rollers, if the melter is going to be placed in the WTP out-of-service melter storage area, all penetrations on the existing enclosure will be welded or closure plates will be welded to the LAW melter. The final package will result in an airtight sealed source that will not produce radioactive emissions. The melter will then be exported from the building and staged for receipt. The melter will be delivered to the LAW out-of-service melter storage area. If the LAW melter is to be transported immediately for macroencapsulation, it will be prepared for transportation prior to removal from the LAW vitrification plant.

#### 5.3.3.2.2 LAW Process Cell Charge Floor

The process cell charge floor, located at the 28 ft elevation, is designated as a C3 area. The process cell charge floor contains pump bulges, valve bulges, and air racks. Bulges are enclosures that provide shielding to personnel during process operation and allow vulnerable or failure-prone components to be located outside the process environment. The cell wall provides shielding between the cell and the bulge interior. The bulge includes shielding and contamination control as needed, depending on the process fluid within the bulge piping. A typical bulge consists of a metal frame attached to the cold-side wall of a process cell; the frame is used to support the piping and components as well as the shielding plates (usually steel), which are bolted to the frame.

The process cell charge floor is an annex above the process cell where routine maintenance operations can be carried out on some process equipment without having to enter the wet process cell. Valves and pumps in the bulges will receive preventative maintenance. Valve bulges have access ports for valve replacements. Valves in the bulges allow process streams to be routed between the various melter feed preparation vessels and melter feed vessels in the event of melter shutdown or off-normal conditions. Personnel access to process cells will normally not be permitted. During specific maintenance activities, the area may be down-posted for access. The process cell charge floor contains access hatches which may be removed to facilitate these C5 process cell maintenance activities.

#### 5.3.3.2.3 LAW Vitrification Plant General Waste Collection Areas

Disposal of miscellaneous mixed waste streams created during operation will be accomplished by packaging at the point of generation. Localized collection points and disposal routes will be established at logical and optimal locations to accommodate maintenance and operations. Waste containers will be transferred to a staging area where packages will be weighed, labeled, and decontaminated for non-fixed contamination, if needed, prior to export. The packaged waste forms will then be transferred to the central waste storage area, prior to transfer to a permitted treatment, storage, and disposal (TSD) facility for final disposal.

### 5.3.3.3 Emission Unit LV-S2

The exhaust from the C5 ventilation system is vented through emission unit LV-S2. The C5 ventilation system serves the process areas of the facilities where radioactive waste materials are stored and handled. To help maintain contamination control, the pressure within C5 areas is maintained at a lower level than C2 or C3 areas.

The areas served by the C5 ventilation system receive air via engineered inbleeds designed to cascade a given amount of air necessary to meet the design needs. The primary purpose of this cascade ventilation system is to enhance control and confinement of radioactive materials provided by the building structural barriers or other process enclosures. Additional design criteria affecting the amount of airflow includes removal of space heat loads. Confinement is also enhanced by maintaining the C5 areas at a significantly greater negative pressure with respect to all other areas. The inbleed systems provide a passive design feature that allows these pressure differentials to be established, which, in turn, also allows the cascade system to function.

Inbleed systems vary in complexity depending on the type of system served, size of the system, and functional design requirements. Components may include balancing and isolation dampers (or a valve on smaller systems) and associated ductwork (or piping on smaller systems). The inbleed isolation dampers are used to isolate the inbleed housing during filter changes. In addition to the functions described above, the inbleed systems may be used to provide supplementary cooling and fire boundary isolation. When serving these functions, cooling coils, fire dampers, and smoke actuated or gravity backdraft dampers are included in the system. Inbleed systems are used in a variety of locations including personnel access points (C2/C3 subchanges) to C3 areas that cascade to C5 areas, valve and pump bulges, and gloveboxes. Typically, the subchange cascade flow from C2/C3 to C3/C5 will be a minimum of 2100 cfm. However, the flow rates for other inbleed systems such as the bulge inbleed from C3 to C5 will vary.

To enhance the C5 ventilation system reliability and minimize the possibility for contamination migration to zones of lesser contamination potential (due to flow reversals), the C5 exhaust fans are provided with a source of backup power. The C5 exhaust fans are also interlocked to the exhaust fans serving the C3 and C2 areas of the building. This interlock shuts the C3 and C2 exhaust fans down upon loss of C5 exhaust fan service. Likewise, the C3 and C2 exhaust fans will not start without an operating C5 exhaust system. C5 area differential pressures are monitored and maintained to established setpoints by a ventilation control system, adjustable speed fan drives, and modulating volume control dampers. See Figure 5-10 and Figure 5-11 for examples of the inbleed systems.

The following sections describe the emission sources, within C3 or C5 areas, that are vented through emission unit LV-S2.

#### 5.3.3.3.1 LAW LSM

The LAW melter is enclosed in an integral shielding and secondary containment "enclosure". The LAW melter shell will consist of the lid and baseplate as well as the structure needed to support the lid and provide a gas barrier between the refractory and the enclosure. The melter shell will be designed to allow operation of the melter at a negative pressure with air in-leakage from the annular space surrounding the melter. The annular space is within the melter enclosure and is a C5 area. This area is ventilated to the C5 ventilation system. The air in-leakage to the melter is caused by the pressure differential between the annular space and the melter. The air in-leakage minimizes the likelihood of deposition of corrosive materials such as sodium borate, sodium chloride, and lithium borate inside the spaces between the gas barrier and the refractory.

#### 5.3.3.3.2 LAW LSM Consumables

Melter consumables will be removed from the melter in the LSM gallery. Melter consumable items include those that require routine and non-routine maintenance and provide necessary functions to continue melter operations. The routine consumable items will be bubbler assemblies. The individual

bubblers will be removed from the melter using the consumable change-out box (CCB). The spent bubblers are then transferred via the CCB to an export gate at the west end of the melter gallery. Once docked onto the gate, the bubbler will be incrementally fed into a shearing machine that downsizes the tube sections of the bubbler into small pieces. The consumable shearing and drum filling operations are performed inside a glovebox that is vented directly to the C5 ventilation system after prefiltration of the exhaust stream.

The small pieces of bubbler tube and the castable portion are contained in a drum, which will be the final disposal package. The consumable shearing and drum filling operations are performed inside a glovebox that is vented directly to the C5 ventilation system after prefiltration of the exhaust stream. New bubbler assemblies will be shipped to the plant and will be installed into the melter. Refractory thermocouples, airlifts, level detectors, feed nozzles, and film coolers will be considered non-routine and are replaced on an as-needed basis.

##### 5.3.3.3.3 LAW Container Handling System

The emissions from the pour cave will be vented through the C5 ventilation system.

Each of the two LAW melters will have two glass discharges that operate independently. Each melter discharge will be provided with a glass pour cell under the melter cell and associated features for filling a container with the ILAW.

A description of the LAW container pour cave is provided in section 5.3.2.2.

##### 5.3.3.3.4 Process Cells

The process cell vessels described in section 5.3.2.1 will be located within various process cells. The emissions from these process cells are vented through the C5 ventilation system.

#### 5.3.3.4 Immobilized Glass Container Decontamination and Monitoring (C5 with Containers Present)

After the ILAW container has been cooled and sealed, it will be decontaminated using carbon dioxide ($CO_2$) blasting. The target smearable contamination level for ILAW containers is not to exceed 2200 dpm/100 $cm^2$ for $\beta/\gamma$ emitters and 220 dpm/100 $cm^2$ for $\alpha$ emitters. The $CO_2$ blasting activities are performed in the decontamination booths located on the 3 ft level in closed cells. Removal of the effluent from the decontamination booth will be achieved using a hood wrapped around the nozzles and ILAW container. The spent $CO_2$ is exhausted by a duct and downstream fans will pull the $CO_2$ gas, contaminants and capture air through the hood in order to keep it from resettling on the ILAW container or in the room. There is a HEPA filter located upstream from the fans in order to minimize ductwork contamination and associated impacts on fan maintenance activities. After passing through the fan, the stream will be sent to the C5 ventilation system, which includes two stages of HEPA filtration.

## 5.4 HLW Vitrification Plant

The function of this system will be to convert blended waste slurry and glass formers into molten glass. The average annual throughput for the HLW melter is 2190 metric tons per year (2410 US tons per year). Sections 5.4.1 through 5.4.4 describe the HLW vitrification processes.

The HLW vitrification plant will consist of eight separate emission units: IHLW-S1, HV-C2, HV-C2R, HV-S1, HV-S2, HV-S3A, HV-S3B, and HV-S4 (see Figure 5-7). The emissions from the IHLW canister storage area are vented through emission unit IHLW-S1. The emission sources to emission units HV-C2, HV-C2R, HV-S1, and HV-S2 will consist of exhausts from plant building ventilation systems. The emission sources to emission units HV-S3A and HV-S3B will consist of offgases from HLW melters and process vessels. The emissions from HLW RFDs and PJMs will be vented through emission unit HV-S4. The proposed radionuclide emission controls and emission rates are provided in section 6 and section 13 of this submittal.

Section 5.4.1 describes the emission sources that are vented through emission unit IHLW-S1. Sections 5.4.2 and 5.4.3 describe the emission sources from the HLW vitrification processes. These emissions are vented through emission units HV-S3A, HV-S3B, and HV-S4. Section 5.4.4 describes the maintenance or waste management activities. The emissions from those activities are vented through emission units HV-C2, HV-C2R, HV-S1, and HV-S2.

### 5.4.1 Emission Unit IHLW-S1

After lidding and decontamination, the immobilized HLW (IHLW) canisters will be swabbed and surveyed for loose surface contamination prior to transport to the IHLW canister storage area. The IHLW canisters will remain in storage until they can be shipped to the disposal location. The IHLW canisters are considered sealed sources and a request for sealed source determination for the glass material is provided in Appendix A of this submittal. The emissions from residual surface contamination on the IHLW canisters will be vented to emission unit IHLW-S1.

### 5.4.2 Emission Units HV-S3A and HV-S3B

The systems described below for emission unit HV-S3A also apply to emission unit HV-S3B since the two HLW vitrification process systems are the same in design and function.

#### 5.4.2.1 HLW Melter Feed System (C5)

Treated HLW feed will be analyzed to determine the glass additive formulation for the conversion of the waste to glass. The glass additives specified in the formulation will be weighed and blended in the HLW glass former feed system, and subsequently mixed with the treated HLW waste. The HLW glass former feed system has no potential to emit radioactive air emissions. The mixture of glass formers and treated HLW waste becomes the HLW melter feed.

The HLW melter feed will be transferred to each melter by air displacement slurry pumps. The pumps will transfer the slurry from the feed vessel to the melter utilizing air as the motive force. The melter feed nozzles will be installed in the melter lid for introduction of slurry over the melt pool cold cap. Each feed nozzle will be individually supplied from a separate pump to reduce the likelihood of line plugging. The feed nozzles will be insulated with ceramics to prevent drying the feed before it reaches the melter. Water flushes will be used to clear the feed lines as necessary.

The feed rate to the melter pool will be determined based on the average plenum temperature in the melter. The plenum temperatures will be controlled in the range of between 300 °C and 500 °C (572 °F and 932 °F). The plenum thermocouples will be used to monitor plenum temperature and change the rate of feeding to the melter.

### 5.4.2.2 HLW Melters (C5)

The two HLW melters will each have a single internal glass chamber with a rectangular surface area. The melters will be lined with refractory material designed to withstand corrosion by molten glass. The energy for the melt will be delivered by three sets of electrodes mounted on opposite walls of the glass pool and bottom. The nominal melter glass pool temperature will be between 950 °C and 1250 °C (1742 °F and 2282 °F). The glass will be discharged through either of two discharge chambers located within one of the long axis walls of the melters. The steel casing for the melter area will be provided with water cooling to maintain a thermal gradient in the bricks for corrosion control, prevent migration of glass through the bricks, and reduce heat load to the process cell. The lid of the HLW melters will be sealed to the melter shell in order to provide gas containment. The lid will provide a support structure through which sub-components can be mounted for submersion in the melt pool and suspension in the melter plenum. Penetrations, primarily on the lid, through the outer shell are sealed by appropriate fittings that allow remote removal and replacement. The HLW melters will be remotely operated and maintained.

Melter Containment System

The refractory will be part of the melter containment and can be thought of as two separate sections. One section will be the refractory in contact with the molten glass pool, and the other refractory section will surround the gas space above the glass pool, which is commonly referred to as the plenum. The glass pool refractory, in conjunction with active cooling provided by a water jacket, will provide glass containment, thermal insulation, and electrical isolation. There is a steep temperature gradient through the refractory that "freezes" glass midway within the refractory wall. The refractory is held under compression with special bolts so that no gaps exist in the joints that would allow molten glass penetration. The plenum refractory will be primarily designed to resist thermal shock, resist corrosion by offgases, and resist corrosion by splashed feed and glass. There are two refractory thermowells to monitor the condition of the melter structure. The thermowells are located at a joint between the two refractory layers. The containment shells are designed to prevent glass leaks in the unlikely event of refractory failure.

The primary corrosion control within the HLW vitrification plant is material selection. For example, acidic solutions will be present within an SBS and the associated condensate vessels. These vessels will be constructed of Hastelloy C-22. The SBS waste collection vessel will be constructed of Hastelloy C-22 and the associated cooling jackets will be constructed of 304 L stainless steel. The WESP and the HEME, which are downstream from the SBS system, will also be constructed of a 6 % molybdenum alloy. The 316 L stainless steel will be used for the construction of all components downstream from the WESP or the HEME. Hastelloy, molybdenum alloy, and 316 L stainless steel are known to be highly resistant to pitting and stress corrosion. Uniform corrosion is expected to be negligible within the HLW vitrification plant based on stated operating conditions and planned vessel materials of construction.

The melter shell will consist of the lid and baseplate, as well as the structure needed to support the lid. The melter shell is designed to allow operation of the melter at a negative pressure with air in-leakage from the melter cave. The pressure differential between the melter cave and the inside of the melter forms the air in-leakage. The air in-leakage reduces the deposition of corrosive materials, that is, sodium borate and lithium borate, to the spaces between the gas barrier and the refractory.

The HLW melter will be operated under a cascaded ventilation system. The melter plenum will be maintained at a vacuum with offgas system blowers and controlled injection of air into the offgas line near the melter exhaust. The flowrate of the injection air will be automatically controlled, based on

melter plenum pressure, so that a relatively constant melter pressure is maintained even as the melter offgas generation rate fluctuates. This will ensure containment and avoid pressurization.

The melter shell will have a drain located in the baseplate between the shell and the glass pool refractory. The drain will prevent the backup of water in the event of a cooling water leak or the uncontrolled addition of water from other sources. The drain will have a sealing mechanism to prevent the inward flow of air due to melter vacuum and a leak detection system.

Joule Heating

The heat for the HLW melter startup will be provided by temporarily installed radiant electric heaters mounted through the lid of the melter. These heaters will melt the starter charge of frit sufficiently to make it conductive between the melter's joule-heating electrodes. When a conducting path is established, the melter will be heated in a controlled manner by passing more and more current between the electrodes through the glass. Slurry feeding will start when the melter reaches its operating temperature.

No radioactive air emissions will be generated when the radiant heaters are removed after initial startup because the process fluid is not radioactive. Removal of the heater from the melter is performed with an air sweep into the melter that prevents significant releases of contaminants. The air sweep is drawn into the offgas system.

The joule-heating system will contain the melter electrodes, electrode power supplies, melter glass pool thermocouples, and the electrode control system.

The electrode configuration for each HLW melter will consist of three plate electrodes, two mounted on opposite sides of the melter and one on the bottom. The electrodes will be cooled by forced air and have forced-air-cooled electrode extensions. The extensions will penetrate the side of the melter below the glass level to minimize the effects of thermal expansion and to minimize the potential for sulfate corrosion. Active cooling of the extensions and the use of a water-cooling jacket will prevent glass from migrating through the refractory package adjacent to the electrode extension penetrations. Power to the electrodes will be single-phase alternating current applied across opposing electrodes. The nominal glass melt pool temperature will be between 950 °C and 1250 °C (1742 °F and 2282 °F). This will be measured with thermocouples in thermowells submerged into the pool at various locations. The power to the electrodes will be regulated to maintain the temperature at the nominal value.

Glass Discharge System

Each HLW melter will have two identical and independently operated glass discharge systems located adjacent to each other on a long side of the melter. The glass discharge systems will include the melter glass level detectors, canister glass level detection, riser, airlift lance, trough, and a heated discharge chamber.

The glass discharge from the melter will be initiated by injecting air or an inert gas at the bottom of the airlift riser. As the gas bubbles rise in the glass, they will entrain glass in the riser to the inlet of the trough. The glass will then flow into the waste canister. The rate of glass discharge will be controlled by adjusting the rate at which the air and gas mixture is injected into the bottom of the riser.

The starting and stopping of the glass discharge will be based on the level of glass in the melter. It is desired to maintain the glass level in the melt pool to within an approximate 1-inch band to reduce

thermal stresses on the refractory. Glass discharge operations will be monitored using a camera system to observe the glass pour stream. The level in the waste canister will be also monitored using infrared thermal imaging and gamma level detectors to prevent overfilling.

HLW Canister Handling System

The pour tunnels will be located south of the melter caves and run in the north-south direction. A cart and rail system will extend further under the melter cave, allowing a standby cart to be positioned under the melter when the process cart is in the pour position. The rails will be isolated from the melter cave with steel contamination control barriers. The cart decontamination areas will be located south of the melter caves and north of the pour tunnel cart maintenance room.

When a canister is required for filling of the IHLW, it will be taken out of the buffer rack in the canister handling cave using the canister handling cave crane and transferred above the appropriate pour tunnel hatch. The hatch will be opened and the canister handling cave crane will load the empty canister into the pour tunnel cart. The grapple will be released and raised, and the hatch will be closed. The cart will travel north until it is position under the pour spout. The pour spout and drip tray assembly connect the canister to the melter discharge chamber to confine glass drips, prevent foreign materials from entering the canister, and confine glass off-gassing. The canister and cart will "push" the drip tray to the pour position where the position sensor will stop the cart travel and line up with the melter discharge chamber and pour trough. The pour spout will be lowered onto the canister flange, and the canister will be filled with IHLW.

After completion of filling, the canister remains at the pour spout for approximately 1 hour to allow a "skin" to form over the glass, which provides a seal to prevent additional offgassing. The pour spout will then be retracted and the cart will be unlocked and moved back. This sequence will also return the drip tray to the closed position when the canister is moved from under the pour spout. The filled canister will be allowed to cool prior to removal from the pour tunnel. The cart will then be moved south in the pour tunnel until it is beneath the canister handling cave hatch. The hatch will be opened, the canister handling cave crane will remove the full canister, and the hatch will be closed. The filled canister will then be cooled in cooling racks in preparation for welding the lid in place.

### 5.4.3 Emission Unit HV-S4

Exhaust from the RFD/PJMs will be vented through emission unit HV-S4. RFD/PJMs will provide for the maintenance-free pulsed or metered transfer of liquids or slurries throughout the treatment process. A reverse flow diverter does not need to be fully submerged in order to remove the contents of a vessel, and it maintains a small and predictable volume of tank contents following its use. Operation of the reverse flow diverter is described in section 5.2.2.

### 5.4.4 Emission Units HV-C2, HV-C2R, HV-S1, and HV-S2

The building ventilation zones for the HLW vitrification plant will be divided into four numbered zones: C1 to C5 (C4 is not used). The higher number indicates greater contamination potential and, therefore, a requirement for a greater degree of control or restriction. Zones classified as C5 will have the potential for the greatest contamination. Zones classified as C1 will be those areas that have no risk of contamination, such as equipment rooms and offices.

Confinement will be achieved by maintaining the lowest pressure for areas with greatest contamination potential, with airflows cascading from areas of least to greatest contamination potential. The principle of a cascade system, in which air passes through more than one ventilation zone, effectively reduces the number of separate ventilation streams and, hence, the amount of air requiring treatment.

The confinement provided by physical barriers is enhanced by the ventilation system, which creates a pressure gradient and causes air to flow through engineered routes from an area of lower contamination potential to an area of higher contamination potential.

### 5.4.4.1 Emission Units HV-C2 and HV-C2R

The exhaust from the C2 ventilation system is vented through emission units HV-C2 and HV-C2R. A portion of the air supplied to the C2 areas will be cascaded into adjacent C3 areas with the rest being directly exhausted by the C2 exhaust systems. Emission unit HV-C2 will handle air from C2 areas that can normally be accessed in street clothes and do not require personal protective equipment. Emission unit HV-C2R will handle air from a reagent storage area. The C2 exhaust system fans are interlocked with the C5 fans and will shut down in the event of a failure of the C5 exhaust system to prevent flow reversal.

The C2 ventilation system serves the non-process operating areas, such as hallways, instrument control and instrumentation room, and electrical and mechanical equipment rooms. Access from C2 areas into a C3 area will be via a C2/C3 subchange room. Therefore, the majority of C2 designated areas have no potential to emit radioactive emissions. However, radioactive emissions may result when C2 areas are used as transport paths for packaged secondary wastes to the outside or failed equipment to the C3 maintenance workshop. C2 activities that have the potential to emit radioactive emissions are listed below.

- Transport of bagged failed manipulator for repair within C3 workshop
- Transport of packaged failed melter for storage at the BOF
- Transport of packaged melter consumables
- Transport of containerized failed equipment
- Transport of containerized miscellaneous wastes
- Transport of PPE
- Transport of process samples via autosampler
- Filter changeout, aerosol testing, transport of spent filters, and spent silver mordenite cartridges
- Fan maintenance

### 5.4.4.2 Emission Unit HV-S1

The exhaust from the C3 ventilation system is vented through emission unit HV-S1. The C3 ventilation system serves areas such as filter plant rooms, exhaust fan rooms, bulge rooms, workshops, maintenance areas, and monitoring areas. Access into a C3 area will be via a C2/C3 subchange room. For C3 areas such as those described above, air will be cascaded from C2 areas, through transfer grilles in the C2/C3 change room, and into the C3 areas.

When a sufficient amount of air cannot be cascaded into a C3 area, a dedicated C2 supply may be provided with a damper on the C2 supply duct, which will close in the event of a loss of C3 extract. The C3 exhaust system fans are interlocked with the C5 exhaust fans and will shut down in the event of a failure of the C5 exhaust system.

An HLW vitrification plant C3 workshop will be located in the northeast side of the HLW vitrification plant. The emissions from this area will be vented through the C3 air ventilation system. Waste management activities performed in this area will include decontamination, size reduction, and packaging of spent equipment. Equipment will be transported to the unit contained in bags, shielded casks, or in a standard waste box. In the workshop, the equipment will be decontaminated to enable "hands-on" maintenance. Spent equipment parts will be bagged and placed in drums or standard waste boxes for disposal. Size reduction may be performed to facilitate packaging. Other spent equipment will be packaged in drums or standard waste boxes. Table 5-3 is a list of locations and planned activities within the C3 areas.

There are also C3 designated areas that are not vented through the C3 ventilation system. Instead, these C3 areas cascade directly into a neighboring C5 area. These specific C3 areas are described as part of the C5 ventilation system. These C3 areas are listed in the description of the C5 ventilation system provided below.

### 5.4.4.3 Emission Unit HV-S2

The exhaust from the C5 ventilation system is vented through emission unit HV-S2. The C5 ventilation system serves the process areas of the facilities where radioactive waste materials are stored and handled. To help maintain contamination control, the pressure within C5 areas is maintained at a lower level than C2 or C3 areas.

The areas served by the C5 ventilation system receive air via engineered inbleeds designed to cascade a given amount of air necessary to meet the design needs. The primary purpose of this cascade ventilation system is to enhance control and confinement of radioactive materials provided by the building structural barriers or other process enclosures. Additional design criteria affecting the amount of airflow includes removal of space heat loads. Confinement is also enhanced by maintaining the C5 areas at a significantly greater negative pressure with respect to all other areas. Inbleed systems are used in a variety of locations including personnel access points (C2/C3 subchanges) to C3 areas that cascade to C5 areas, valve and pump bulges, and gloveboxes. Typically, the subchange cascade flow from C2/C3 to C3/C5 will be a minimum of 2100 cfm. However, the flow rates for other inbleed systems such as the bulge inbleed from C3 to C5 will vary.

Inbleed systems vary in complexity depending on the type of system served, size of the system, and functional design requirements. Components may include balancing and isolation dampers (or a valve on smaller systems), and associated ductwork (or piping on smaller systems). The inbleed isolation dampers are used to isolate the inbleed housing during filter changes. In addition to the functions described above, the inbleed systems may be used to provide supplementary cooling and fire boundary isolation. When serving these functions, cooling coils, fire dampers, and smoke-actuated or gravity-backdraft dampers are included in the system. Inbleed systems are used in a variety of locations including personnel access points to C3 areas that cascade to C5 areas, valve and pump bulges, and gloveboxes.

To enhance the C5 ventilation system reliability and minimize the possibility for contamination migration to zones of lesser contamination potential (due to flow reversals), the C5 exhaust fans are provided with a

source of backup power. The C5 exhaust fans are also interlocked to the exhaust fans serving the C3 and C2 areas of the building. This interlock shuts the C3 and C2 exhaust fans down upon loss of C5 exhaust fan service. Likewise, the C3 and C2 exhaust fans will not start without an operating C5 exhaust system. C5 area differential pressures are monitored and maintained to established setpoints by a ventilation control system, adjustable speed fan drives, and modulating volume control dampers. See Figure 5-10 and Figure 5-11 for examples of the inbleed systems.

The following sections describe the emission sources within C3 or C5 areas that are vented through emission unit HV-S2.

#### 5.4.4.3.1 IHLW Canister Decontamination and Monitoring

After filling, the cooled IHLW canister will be decontaminated, swabbed, and monitored prior to transfer to the IHLW canister storage area. The IHLW canister decontamination is located in the C5 decontamination/swab and monitor cave. The decontamination target levels for the IHLW product canister are 22,000 dpm/100 $cm^2$ for beta and gamma, and 2000 dpm/100 $cm^2$ for alpha emitting radionuclides.

A filled, cooled, and welded IHLW canister will be initially washed in a sealed vessel using medium-pressure demineralized water to remove loose contamination. Loose contamination will be captured in the sealed vessel. The area where the sealed vessel is located is served by the C5 ventilation system.

After the demineralized water wash, the canister will be decontaminated by chemically etching a thin layer of steel from the canister surface, using cerium ion in a dilute nitric acid solution. The canister will then be washed with nitric acid, followed by a second washing with demineralized water. The canister will remain in the sealed vessel to dry, while the decontamination fluids are pumped into a separate decontamination vessel to which hydrogen peroxide is added to neutralize remaining cerium ion. Potential emissions from the decontamination fluids in the decontamination vessels will be treated through the HLW vessel vent treatment system.

After decontamination and drying, the canister will be swab-sampled using an automated power manipulator and analyzed. If the contamination level is within acceptable limits, the IHLW container will be transferred to the IHLW canister storage area. IHLW canisters that exceed the contamination limits will be returned to the decontamination and swabbing station for further processing.

#### 5.4.4.3.2 HLW Melter Cave

The two HLW melter caves will be located in the central portion of the HLW vitrification plant. The emissions from these areas will be vented through the C5 ventilation system.

Activities performed in the melter caves will include the dismantling and packaging of spent consumables and decontamination. The types of spent consumables will include waste recirculators, lid heaters, and thermocouples and jumpers. When spent consumables are ready for change-out, they will be placed on a consumable storage rack while awaiting size reduction. The consumables will be reduced in size by dismantling or cutting the spent equipment, or both. This process will be remotely conducted on tables in the melter cave. The spent consumables will be placed in baskets and lowered into containers in a transfer tunnel that will pass under the HLW melter cave. Airlock cells will be used for packing or unpacking melters.

In case of a HLW melter failure, the melter will be evaluated for meeting the receiving treatment, storage, and disposal (TSD) facility's waste acceptance criteria, particularly in terms of the radiological contamination in the HLW glass residue present in the melter, before it is placed in an overpack. The overpack will provide a shielded disposal container for the spent melter. After the outside surfaces of the overpack have been checked for radiological contamination and decontaminated as required, the out-of-service melter and its overpack will be moved through the melter airlock and placed on the transporter, to be moved out of the HLW vitrification plant through the rollup doors. Decontamination of the overpack in the airlock, before it is exported, will be done manually using moist cloths. Water spray will also be provided as a contingency.

#### 5.4.4.3.3 HLW Vitrification Plant Filter Cave

The HLW filter cave will contain HEPA filters associated with the C5 ventilation and the melter offgas ventilation systems. The cave is located on the 0 ft level.

Within the filter cave, an overhead crane or power manipulator is used to change out the HEPA filters, transport in-cave equipment, and handle any tooling necessary to perform maintenance and operational tasks.

Additionally, a dedicated hands-on equipment maintenance area will be located at the east end of the cave. This area is separated from the filter cave by a set of equipment access shield doors. The area contains access platforms, decontamination equipment, fixtures and tooling necessary to perform identified maintenance activities and also serves as an access route for importing clean filters into the cave. The overhead crane or power manipulator will be parked in the maintenance area when not being used in-cave.

Spent HEPA filters are size-reduced into a disposal container prior to being exported from the cave. The disposal container is lowered through an access hatch in the floor of the cave and into a waste drum. The drum is then lidded, swabbed, and assayed prior to being exported from the building.

#### 5.4.4.3.4 Radioactive Solid Waste Handling

The HLW vitrification plant drum transfer tunnel will stretch east to west, nearly the entire length of the HLW vitrification plant. The emissions from this area will be vented through the C5 ventilation system.

At the filter cave and the melter caves, drums will be positioned under the filter cave/melter cave export well and the drum transfer cart will be locked into position. The containment between the filter cave/melter cave and the drum transfer tunnel will be maintained by an engineered air-gap between the top of the drum and the underside of the export well. A loaded basket will then be lowered into the drum, using the filter cave/melter cave handling equipment. The drum will then be lowered and transferred to the drum lidding station, where the outer lid will be replaced and crimped onto the drum.

Prior to transporting to the waste storage area, the drums will be swabbed for contamination along their bottom, sides, and lid interface. Viewing windows will be positioned to allow for the evaluation of the swabbing process. The swabs will be monitored for radiological contamination in an external glovebox. If surface contamination exceeds the accepted limits, the drum will be repeatedly vacuum-cleaned, swabbed, and washed with wet swabs until the radiological limits have been met. Drums will be transported by means of an overhead bridge crane and drum grapple. The drums will be lowered through

the swabbing and monitoring system floor hatch into an open transport cask. The cask lid will be replaced and the cask will be monitored for gamma radiation shine paths before it is transferred to the import/export area by means of the cask transfer cart. The cask will then be transferred to the truck bay by an overhead crane for shipment to the central waste storage area.

#### 5.4.4.3.5 HLW Vitrification Plant In Cell Maintenance

HLW vitrification plant cells will contain the melters, melter feed preparation and feed vessels, and certain offgas system components. Overhead cranes, hoists, master-slave and power manipulators will be the primary equipment used to carry out various replacement, size-reduction, and packaging tasks. Auxiliary tools will include impact wrenches, nut-runners, and hydraulic shears. The emissions from these areas will be vented through the C5 ventilation system.

Maintenance activities will include dismantling and size reduction of spent melter components or consumables for export out of the cave in waste containers. Various size-reduction tools will be used to cut down the equipment. The waste will be placed on a sorting table for screening and segregation prior to packaging and export.

Melter replacement will generally be preceded by an alternate glass removal step. Lid heaters will keep the glass pool at the desired temperature ranges. Air and vacuum lines will be inserted to draw the molten glass into an attached canister. The failed melter will be disconnected and prepared for transport out of the cave.

A consumable bucket, equipped with interchangeable lid cutouts called templates, will be used to import and export melter consumables. HLW melter feed process system vessels will be organized such that power manipulators can disconnect connections and prepare failed vessels and components for export. Components of the HLW melter offgas systems found in these caves will also be organized for similar activities.

The C3/C5 air lock, which houses the decontamination tanks and a crane decontamination area above the C3/C5 airlock will also be used for the decontamination of equipment before hands-on maintenance in the crane maintenance area. In the decontamination room, the crane and equipment will be decontaminated with a demineralized high-pressure wash water spray. Non-organic detergents or acid solvents may also be used, if needed. Wash water will be collected by a sump.

## 5.5 Analytical Laboratory

The onsite analytical laboratory (lab) will have three emission units: LB-C2, LB-S1, and LB-S2. The building ventilation air associated with general laboratory work areas or offices will be vented through emission unit LB-C2. The emissions from various radiological laboratory fume hoods and the hot cells will be vented through emission units LB-S1 and LB-S2, respectively.

The preparation and analysis of sample material is performed by two systems: the analytical hot cell laboratory equipment system (AHL), and the analytical radiological laboratory equipment system (ARL), also know as rad labs. Methods and equipment selected for laboratory analyses will be conducted and used in accordance with applicable requirements.

Figure 5-12 depicts the ventilation of each system and the flow of samples through the lab. System descriptions are summarized below. The proposed radionuclide emission controls and emission rates are provided in section 6 and section 13 of this submittal.

### 5.5.1 Emission Unit LB-S1

The following subsections describe the emission sources to emission unit LB-S1.

#### 5.5.1.1 Analytical Radiological Laboratory Equipment System (Rad Labs)

The radiological laboratories (rad labs) are designed to support the preparation and analysis of low-to-moderately radioactive samples from the LAW vitrification plant. The rad labs also support the analyses of PT and HLW samples collected and diluted in the hot cell facility. Samples are manually transferred from the hot cell facility to the rad labs. The rad labs are capable of receiving manually transported low-to-moderate activity sample aliquots from the production facilities.

Specifically, the rad labs include the facilities and equipment required to support the following types of activities:

- Total organic and inorganic analyses
- Quantitation of metals and anions
- Organic quantitation
- Radionuclide separation and counting
- Sample receipt and (manual) transport
- X-ray fluorescence spectrometry and X-ray diffraction analysis
- Distillation/titration
- Ultraviolet and visible spectroscopy
- Fourier transformation infrared spectrometry (FT-IR)
- Preparation of glass samples for elemental analysis
- General physical properties analysis

#### 5.5.1.2 Laboratory Maintenance

The analytical laboratory maintenance shop provides space for performing preventive and corrective maintenance on laboratory equipment. There are two shops, located in different potential radioactive contamination areas. The C3 shop allows decontamination, maintenance, and storage of contaminated equipment such as hot cell manipulators. The C3 maintenance shop is ventilated to the C3 ventilation system. The C2 shop provides space for the maintenance of equipment that is not expected to be radioactively contaminated such as electrical components, utilities systems components, and instruments, and is ventilated to the C2 ventilation system. Table 5-4 provides a list of maintenance activities to be performed in the laboratory maintenance shops.

#### 5.5.1.3 Radioactive Solid Waste Management

Solid and organic lab pack wastes from the rad lab areas are accumulated in the individual labs until they are transferred to the laboratory drum storage area for waste consolidation and volume reduction. Waste

consolidation is completed in the volume reduction and lab pack rooms adjacent to the drum storage area. Waste volume reduction is completed in the fully enclosed drum compaction units, which are ventilated to the C3 ventilation system. Lab pack activities are completed inside of a fume hood, which is ventilated to the C3 ventilation system. Waste drums are managed on spill pallets in the drum storage area prior to transfer to a permitted TSD facility. The drum storage area is ventilated to the C2 ventilation system.

#### 5.5.1.4 Radioactive Liquid Waste Disposal

Liquid effluents from rad labs flow to the laboratory area sink drain collection vessel. Effluents collected in this vessel include rad lab fume hood cupsink drains, lab sinks, health physics technician personnel decontamination showers and sinks, and the hot cell access area air lock floor drains. The laboratory area sink drain collection vessel and the hot cell drain collection vessel are transferred to the pretreatment plant for processing. The laboratory area sink drain collection vessel is ventilated to the C3 ventilation system.

### 5.5.2 Emission Unit LB-S2

The following subsections describe the emission sources to emission unit LB-S2.

#### 5.5.2.1 Autosampling System (ASX)

The sampling will be performed by a computer-controlled autosampler system. A fixed volume of sample will be collected and transferred into a sample bottle or vial and then automatically transferred into a sample carrier. Sample carriers are then pneumatically transferred to either the laboratory hot cell or radiological laboratory depending on where the sample was collected. The ASX system is divided into two systems, a high-activity sampling system and a low activity sampling system. The high activity sampling system collects and pneumatically transfers samples from the PT and HLW vitrification plants to the receipt cell within the hot cell laboratory. Samples collected from the LAW vitrification plant are pneumatically transferred directly to the radiological laboratory.

#### 5.5.2.2 Sample Receipt from the Pneumatic Transport System

Containerized samples are transported pneumatically to the appropriate receipt location by the computer-controlled autosampler system located in the lab marshalling room. The marshalling room consists of several cubicles that house the equipment necessary to:

- Store sample bottles and carriers
- Send sample bottles (in carriers) from the two systems to the pretreatment, HLW vitrification, and LAW vitrification plants
- Identify each sample and measure the associated radioactivity
- Decontaminate sample carriers

The emissions from this activity are vented through emission unit LB-S1.

#### 5.5.2.3 Analytical Hot Cell Laboratory Equipment System (AHL)

The analytical hot cell laboratory equipment system is designed to provide sample preparation, dilution, and dissolution required to support the analyses of production samples collected at the pretreatment and HLW vitrification facilities. This series of hot cells is capable of accepting samples taken automatically

from each of the production facilities (using pneumatic transport) and it is also capable of accepting samples that are transported manually. Some of these samples are transported to the hot cells or to the rad labs either directly, after dilution, or after stripping off the radioactive content.

Specifically, the analytical hot cell laboratories will include facilities and equipment required to perform the following activities:

- Sample receipt and transport
- Dilution, fusion, and acid digestion required to prepare samples for subsequent analysis
- Extraction for organic analyses
- General physical properties analysis
- Waste collection and transport

#### 5.5.2.4 Radioactive Solid Waste Management

Small volumes of solid waste are accumulated in the hot cells until the quantity is sufficient to fill a waste drum. Waste from the individual hot cells is then transferred to a waste management cell where waste management, consolidation, and waste packaging activities are conducted. The waste cell contains tools and equipment to complete size reduction and container void fill. These solid wastes as well as organic lab pack wastes are transferred into waste drums using a bagless transfer system. Depending on waste type, the drums are filled with the appropriate volume of void fill/adsorbent material and closed. Ventilation flow from the hot cell area, including the waste cell, is routed to the C5 HEPA filtration system.

#### 5.5.2.5 Radioactive Liquid Waste Disposal

Liquid effluent collected from hot cell cupsinks, hot cell fume hood drains, ASX carrier decontamination, and the C3 maintenance glovebox drain, flow directly to the hot cell drain collection vessel. Effluent from the laboratory area sink collection vessel and the hot cell drain collection vessel are transferred to the pretreatment plant for processing or recycling. The hot cell drain collection vessel is ventilated to the C5 ventilation system.

### 5.5.3 Emission Unit LB-C2

The building ventilation air associated with general laboratory work areas or offices will be vented through emission unit LB-C2.

#### 5.5.3.1 Radioactive Liquid Waste Disposal (RLD)

The floor drain collection vessel collects, contains, and transfers non-contaminated liquid effluent. This vessel collects effluent from radiological laboratory floor drains, eyewash, and safety shower equipment. The vessel also collects effluent from the C2 area floor drains located in areas such as the marshalling room, laboratory area corridors, hot cell bay area, and the filter room. Administrative procedures and periodic sampling will be used to ensure that the liquid effluent going to this vessel is not contaminated. Although the floor drain collection vessel is identified as a part of the RLD system, it is not designed or permitted to manage radiological or dangerous wastes. If a spill or release were to occur that

contaminated this tank, the tank would be discharged to the laboratory area sink collection vessel and be decontaminated prior to being returned to service.

Depending on process needs, the review of operating records, and analytical sampling results, effluent from the floor drain collection vessel can either be discharged to the laboratory area sink collection vessel or be diverted to the balance of facilities, nonradioactive liquid discharge system. The floor drain collection vessel is ventilated to the C2 ventilation system.

## 5.6 Balance of Facilities

The balance of facilities (BOF) will include, by definition, support systems and utilities required for the waste treatment processes within the pretreatment, LAW vitrification and HLW vitrification plants, and the analytical laboratory. The BOF areas that handle radionuclide material are:

- Central waste storage area
- LAW out-of-service melter storage area
- HLW out-of-service melter storage area

These BOF areas are described below.

### 5.6.1 Central Waste Storage Area

The central waste storage area will be used to store containerized secondary waste from the process facilities. Secondary waste will include mixed low-level radioactive waste and consumable wastes from the LAW and HLW melters. This area will contain only closed, non-vented containers such as drums and burial boxes. Under normal operating conditions, closed, non-vented containers are not expected to produce radioactive emissions.

### 5.6.2 Out-of-Service Melter Storage Areas

There will be two out-of-service melter storage areas. One of the storage areas is used primarily to store out-of-service LAW melters prior to transferring to a permitted TSD facility. The LAW melter is constructed in a shielded metal enclosure that is integral to the melter. Prior to being moved out of the LAW vitrification building for placement in the storage area, all penetrations on the existing melter enclosure will be welded or an overpack will be welded to the LAW melter. This will result in an airtight sealed source that will not produce radioactive emissions.

The other storage area is used primarily to manage out-of-service HLW melters. After their service life, these melters will be containerized in a welded steel overpack. This will result in an airtight sealed source that will not produce radioactive emissions.

Under normal operation, the out-of-service melter storage area will not emit radionuclide emissions, as the out-of-service melter packages will be sealed sources. A request for approval of sealed source determination is provided in Appendix A of this submittal.

### 5.6.3 Other Balance of Facilities

The remaining BOF facilities listed below will not manage radionuclide materials or produce radionuclide emissions.

- Administration building
- Chiller and compressor
- Plant cooling tower
- Diesel generators
- Field erected tanks
- Fire water pumps and fire water tanks
- Fuel oil pump house
- Glass formers storage building
- Guardhouse
- Non-dangerous, nonradioactive liquid effluent tank area
- Melter assembly building
- Steam plant
- Switchgear buildings
- Wet chemical storage building
- Water treatment building

Table 5-1 Pretreatment Maintenance and Waste Management Activity Summary

| Task Description | To Pretreatment C3 Shop[a] | IN-SITU Activities |
|---|---|---|
| Pump Maintenance[b] | X | |
| Valve Maintenance[b] | X | |
| Condenser Maintenance[b] | | X (non-radioactive) |
| Samplers[d] | X | |
| Demister/Evaporator Pad Change-out[b] | | X (non-radioactive) |
| Aerosol Testing | | X |
| Fan Maintenance | X | X |
| Filter Change-out[c] | | X |

a Emissions from the pretreatment C3 workshop are cascaded to the C5 ventilation system.

b Maintenance within bulges may include maintenance or repair of pumps, valves, and other items. These items may be flushed or decontaminated prior to removal or worked in place, if appropriate.

c Spent filters will be disposed following filter change-out using approved maintenance and radiological procedures.

d Samplers will be decontaminated prior to transfer to the C3 workshop.

**Table 5-2 LAW Vitrification Plant Maintenance and Waste Management Activity Summary**

| Task Description | LAW C3 Shop | IN-SITU Activities |
|---|---|---|
| Exhaust Fan Maintenance | X | X |
| Aerosol Testing | | X |
| Melter Replacement | | X |
| Bubbler Replacement with CCB | | X |
| Conveyor Maintenance | | X |
| Tool Maintenance | X | |
| RAD Waste Handling | | X |
| Crane Preventative Maintenance/Inspection | | X |
| Equipment Preventative Maintenance | | X |
| Decontamination | | X |
| Manipulator Repair[d] | X | |
| Valve Repair | X | |
| Air Displacement Slurry Pump Repair | | X |
| SBS Pump Repair | | X |
| Sump Pump Repair | | X |
| Dip Tube Maintenance | | X |
| Agitator Maintenance | | X |
| Size Reduction Activities[a] | | X |
| CCB Repairs | X | |
| Decontamination Activities | X | X |
| HEPA Change-out[c] | | X |
| Bulge Preventative Maintenance[b] | X | |
| Charcoal Filter Change-out | | X (potentially non-radioactive) |
| Fan Maintenance | X | |
| Scrubber Maintenance | | X |

a Appropriate engineered controls will be used to cascade the emissions to the C5 ventilation system.

b Maintenance within bulges may include maintenance or repair of pumps, valves, and other items. These items may be flushed or decontaminated prior to removal or worked in place, if appropriate.

c Spent filters will be disposed following filter change-out using approved maintenance and radiological procedures.

d Manipulators will be pulled and transferred to the C3 workshop for decontamination. Once the contamination levels are reduced to within acceptable limits for hands-on maintenance, the manipulator will be repaired using approved maintenance and radiological procedures.

**Table 5-3 HLW Vitrification Plant Maintenance and Waste Management Activity Summary**

| Task Description | HLW C3 Shop | IN-SITU Activities |
|---|---|---|
| Fan Maintenance | X | |
| Booster Fan Preheater Maintenance | X | |
| Cutting, Grinding, & Welding[a] | X | |
| Hydraulic Shearing[a] | X | |
| MSM Repair[b, d] | X | |
| Valve Repair and Maintenance[c] | X | |
| Manipulator/Equipment Storage[d] | X | |
| Auto Sampler Repair[e] | X | |
| Routine Preventative Maintenance | X | |
| Breaker Preventative Maintenance | X | |
| Agitator Maintenance | | X |
| Switch Gear Maintenance | X | |

a Appropriate engineered controls will be used to cascade the emissions to the C5 ventilation systems.

b MSM = master-slave manipulator.

c Maintenance within bulges may include maintenance or repair of pumps, valves, and other items. These items may be flushed or decontaminated prior to removal or worked in place, if appropriate.

d Manipulators will be pulled and transferred to the C3 workshop for decontamination. Once the contamination levels are reduced to within acceptable limits for hands-on maintenance, the manipulator will be repaired using approved maintenance and radiological procedures.

e Samplers will be decontaminated prior to transfer to the C3 workshop.

**Table 5-4 Analytical Laboratory Maintenance and Waste Management Activity Summary**

| Task Description | Lab C3 Shop | IN-SITU Activities |
|---|---|---|
| Filter Change-out[a] | | X |
| Manipulator Repair[b] | X | X |
| Valve Maintenance | X | X |
| Pump Maintenance | X | X |
| Exhaust Fan Maintenance | X | X |

a Spent filters will be disposed following filter change-out using approved maintenance and radiological procedures.

b Manipulators requiring extensive repairs will be pulled and transferred to the C3 workshop for decontamination. Once the contamination levels are reduced to within acceptable limits for hands-on maintenance, the manipulator will be repaired using approved maintenance and radiological procedures.

**Figure 5-1 WTP Simplified Flow Diagram**

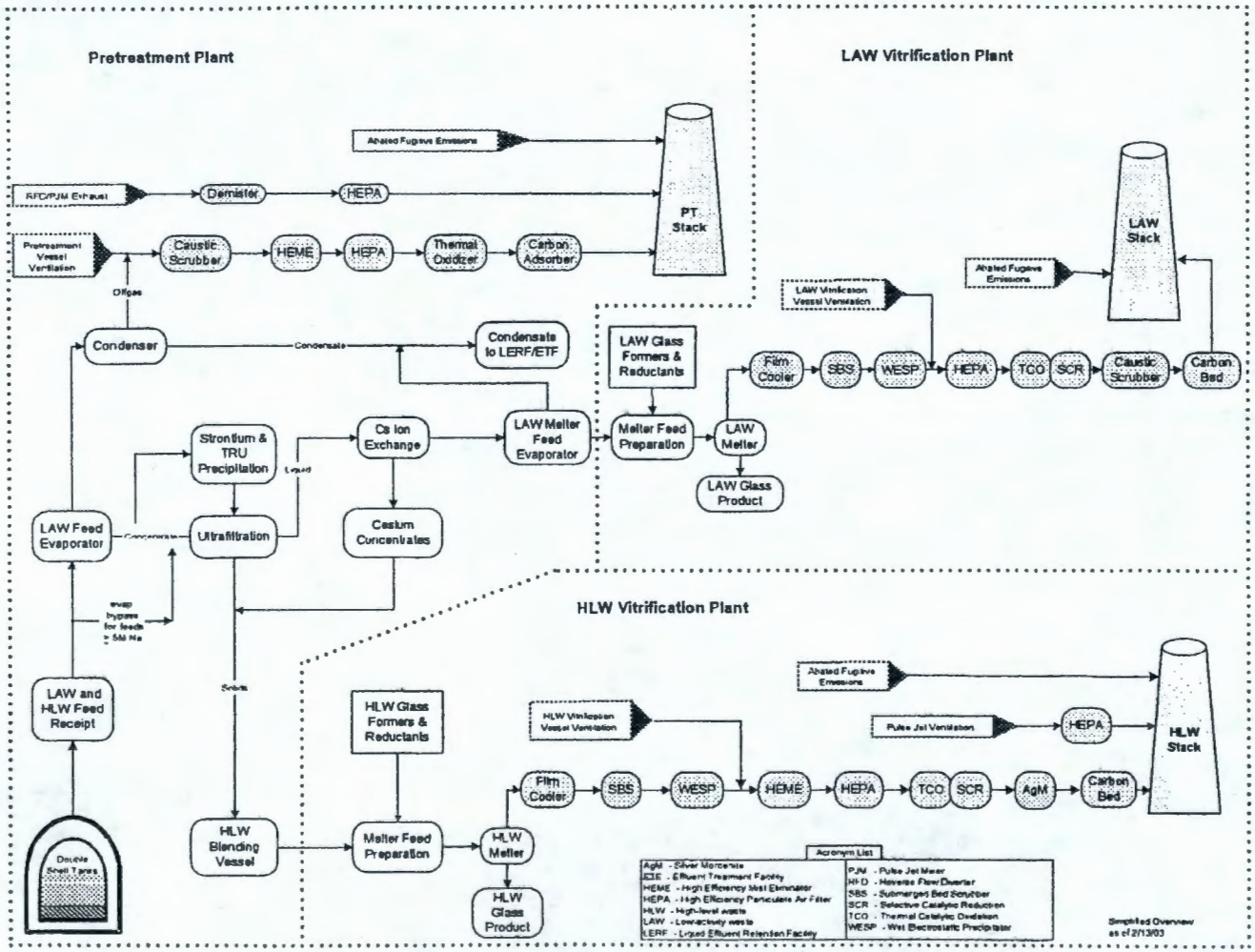




Best Available Copy

**Figure 5-2 Pretreatment Simplified Flow Diagram**

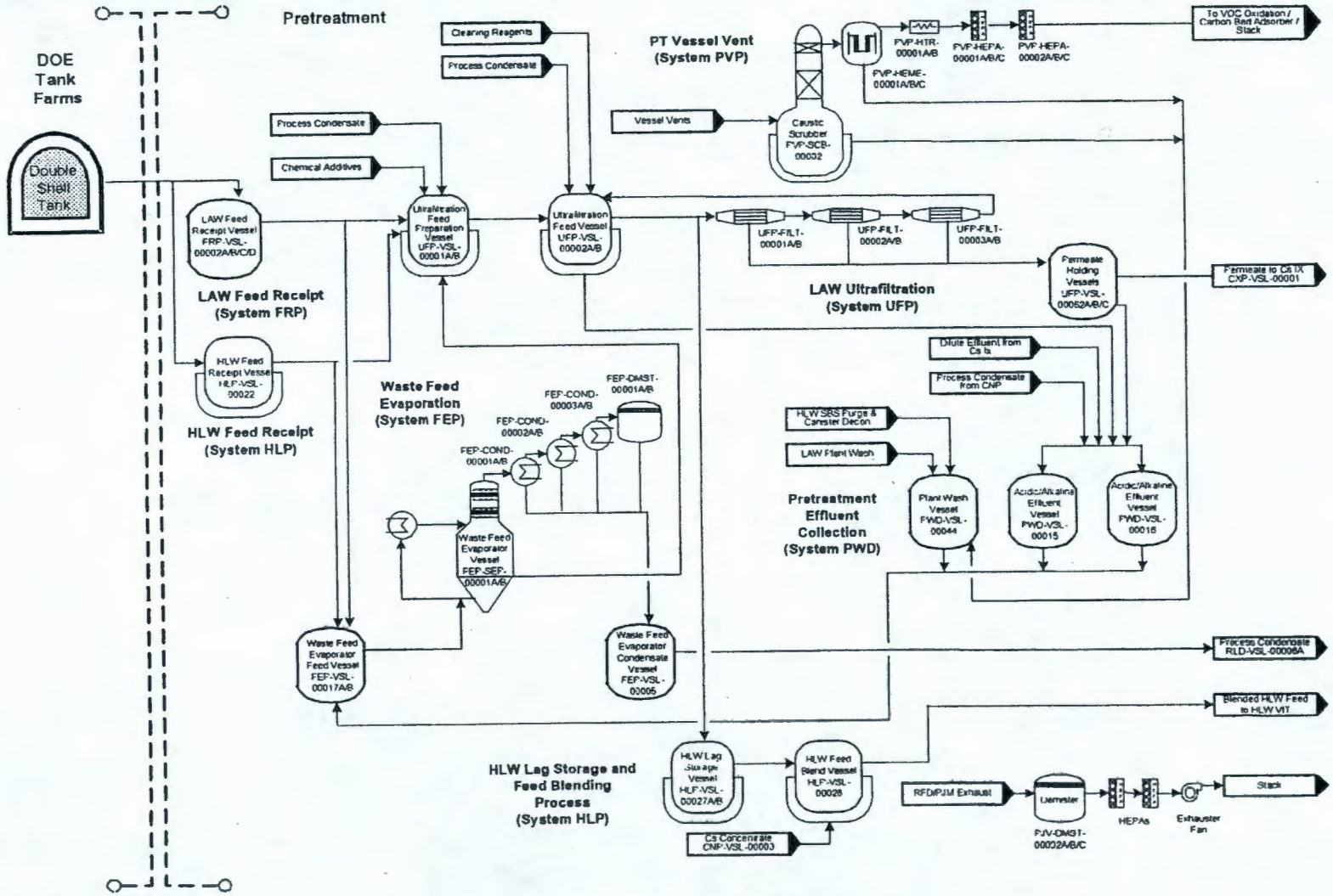




Best Available Copy

Figure 5-2 Pretreatment Simplified Flow Diagram, Continued

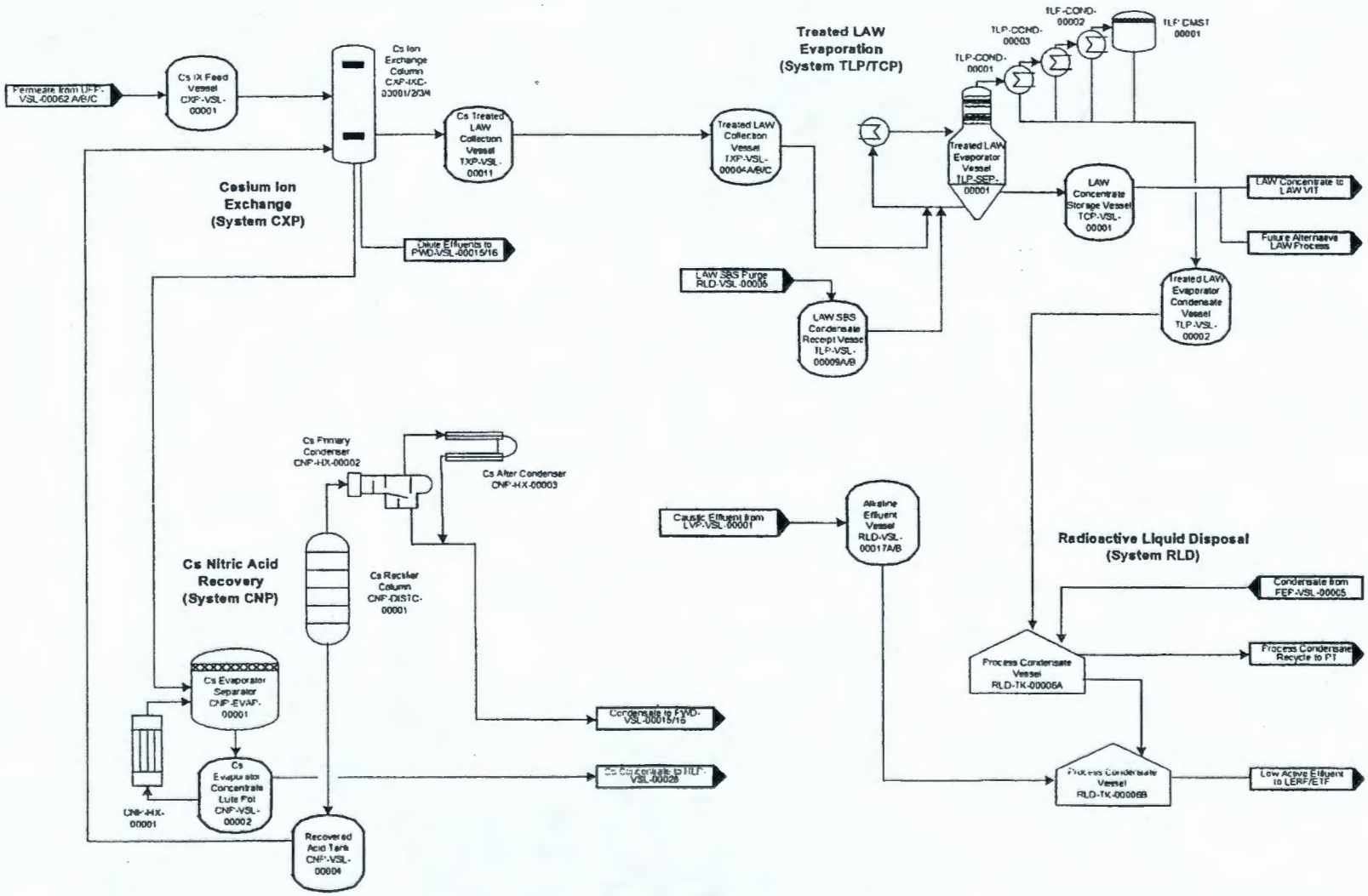


Best Available Copy

**Figure 5-3 LAW Vitrification Simplified Flow Diagram**

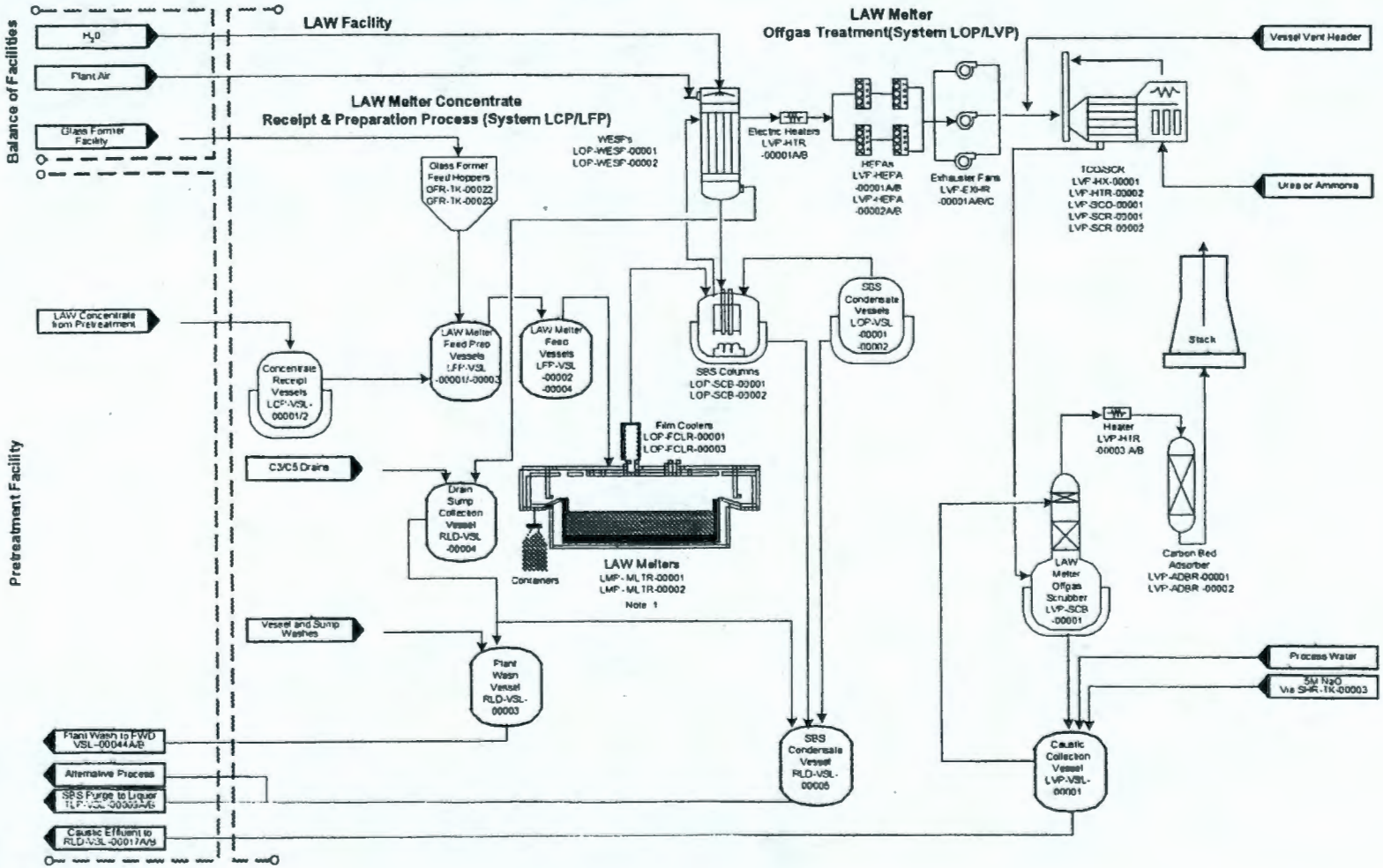


Notes:
1. For this diagram one melter system is shown but assumes a total of two LAW melter systems of identical capacity.

Best Available Copy

Figure 5-4 HLW Vitrification Simplified Flow Diagram

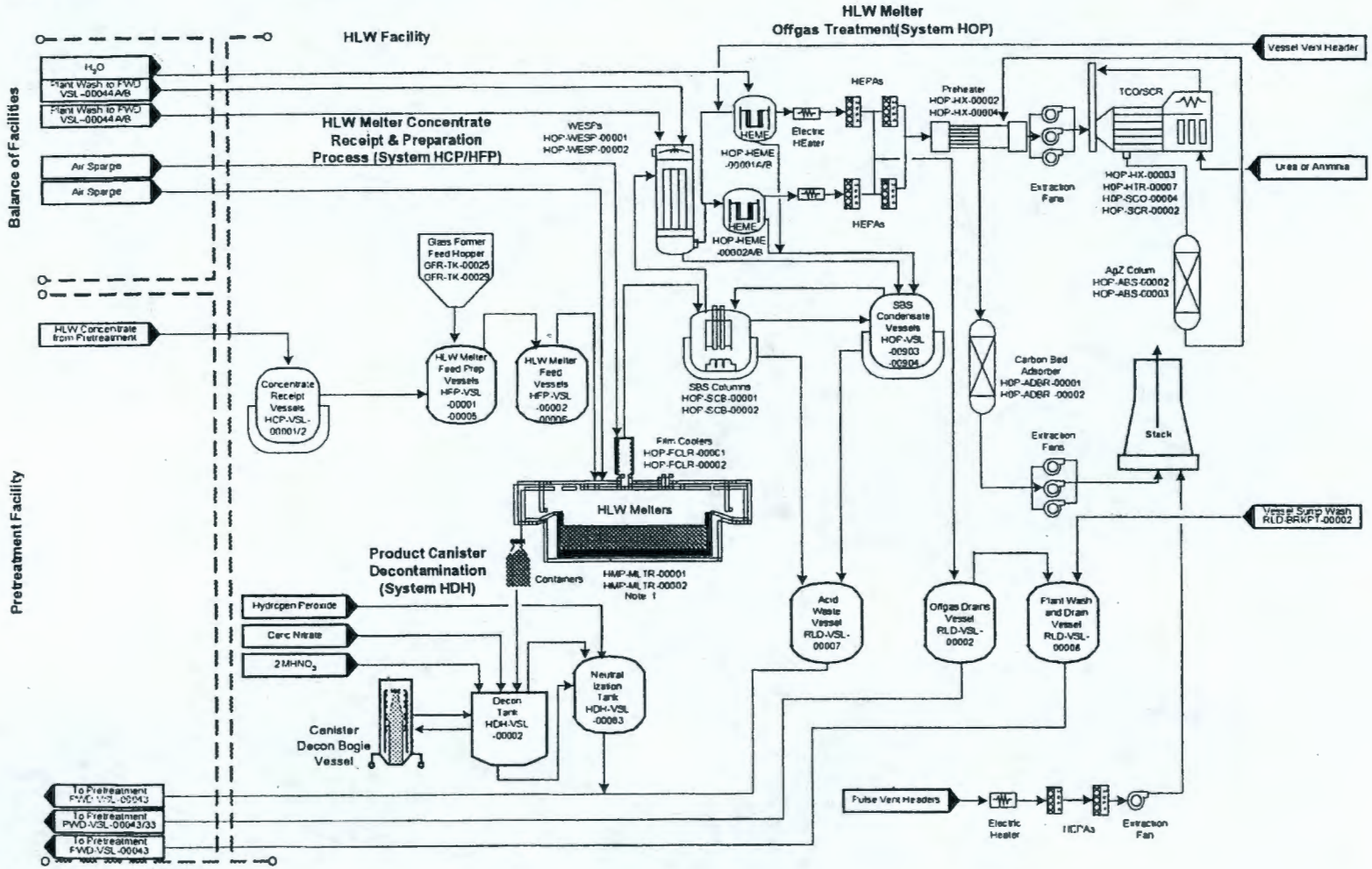


Notes:
1. For this diagram one melter system is shown
but assumes a total of two HLW melter systems of identical capacity.

Best Available Copy

**Figure 5-5 Pretreatment Plant Emission Units**

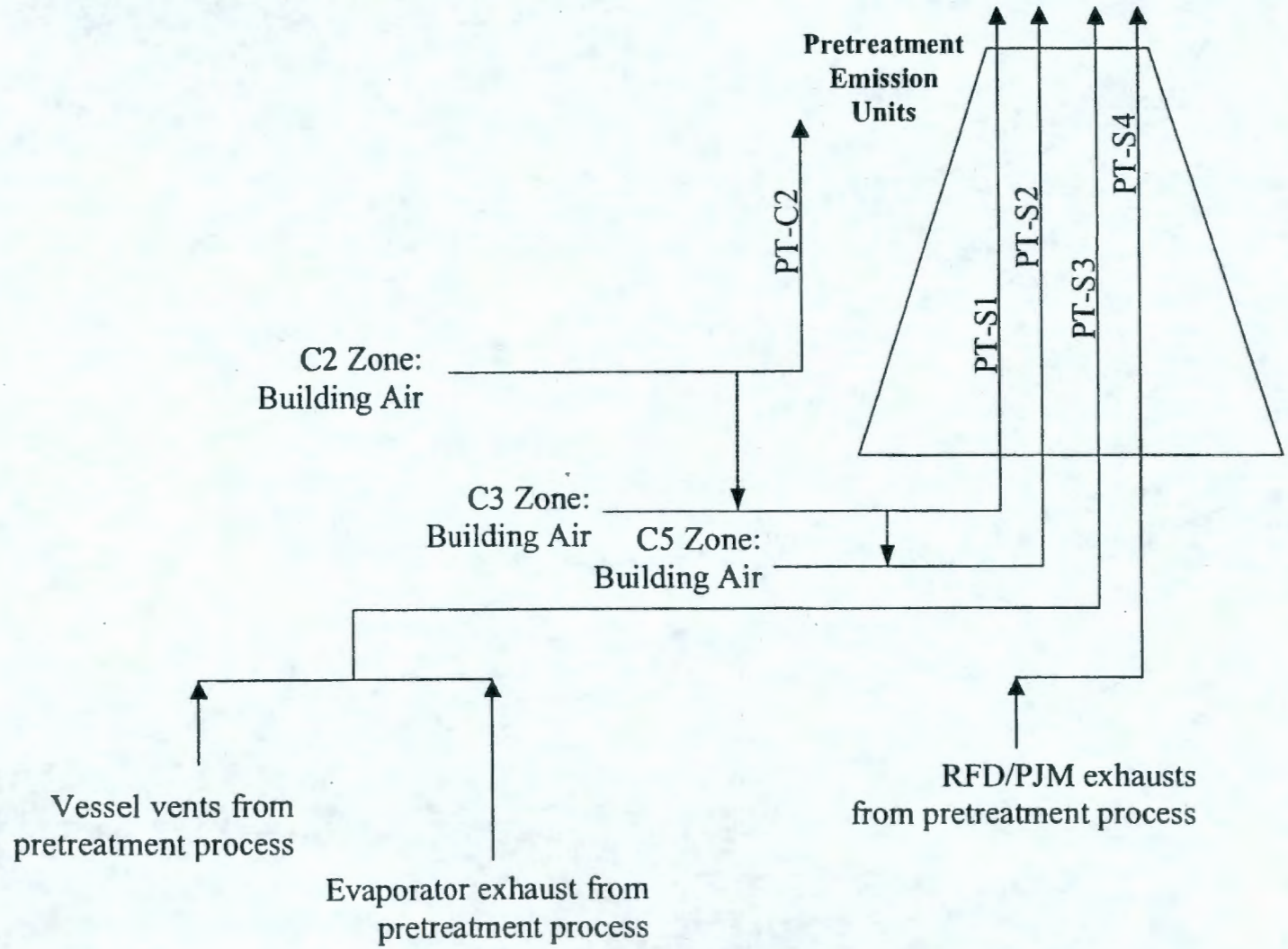

**Figure 5-6 LAW Vitrification Plant Emission Units**

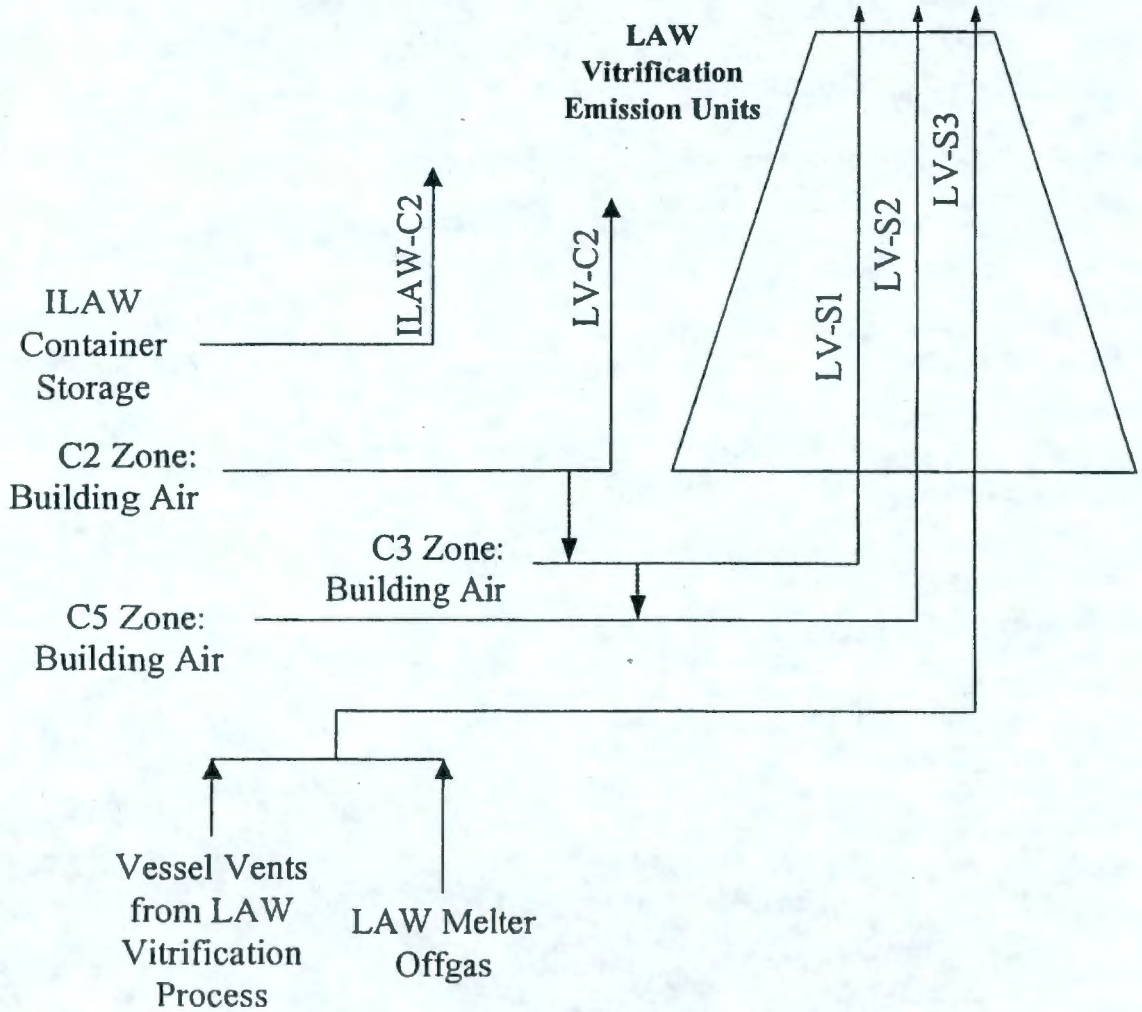

**Figure 5-7 HLW Vitrification Plant Emission Units**

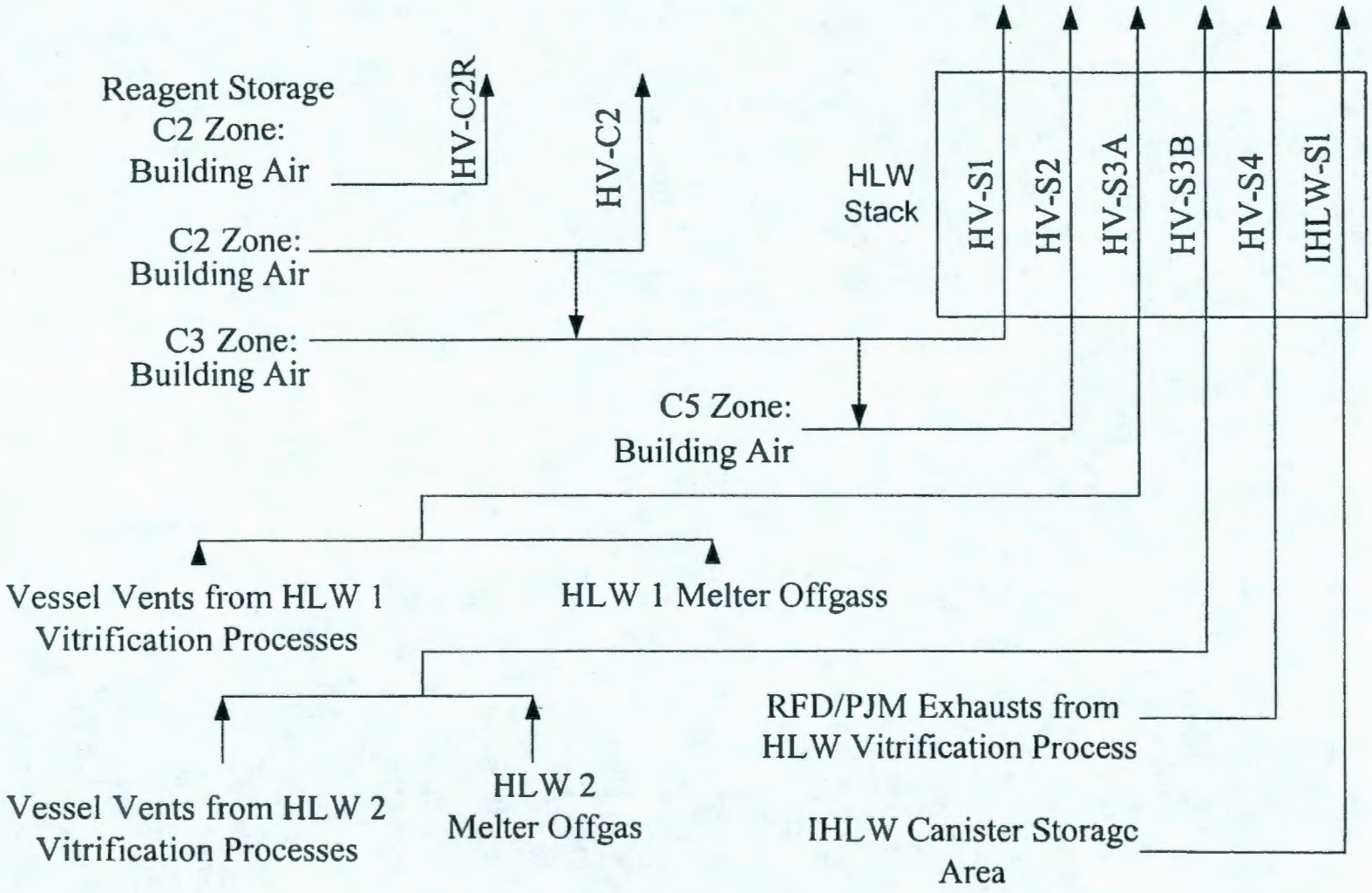

Figure 5-8 WTP Emission Unit Configuration - Top Views

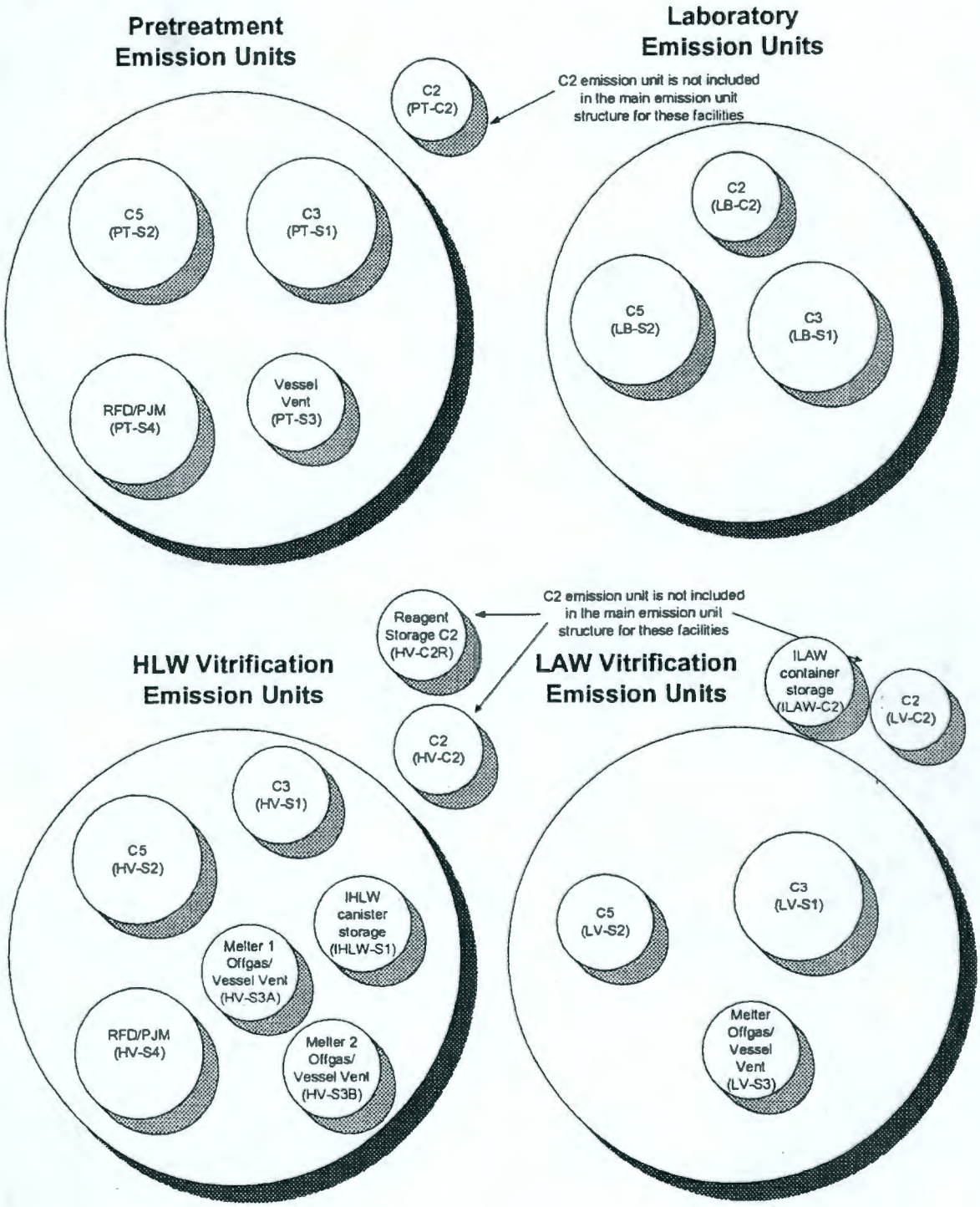


Best Available Copy

**Figure 5-9 Typical Arrangement of a Reverse Flow Diverter**

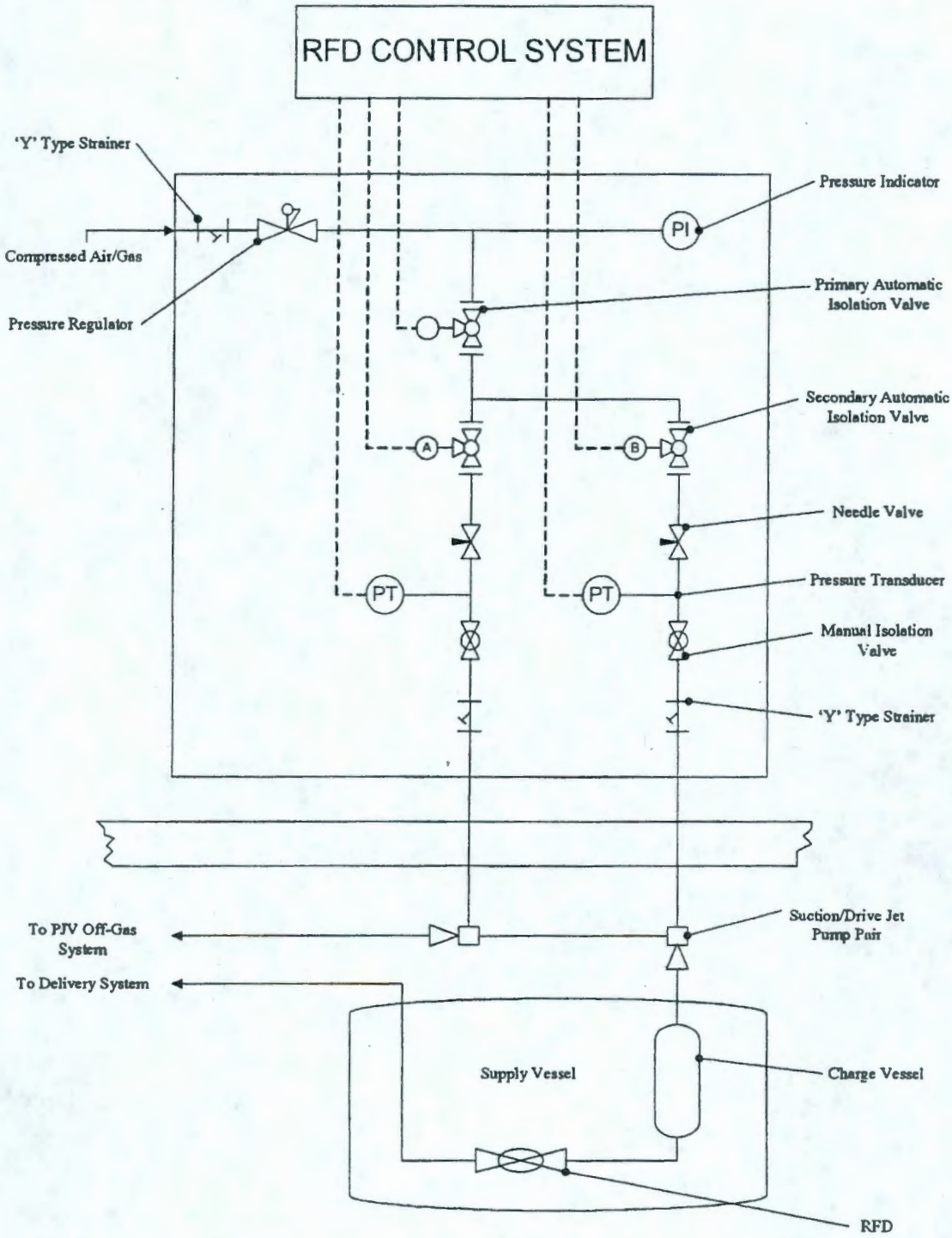

**Figure 5-10 Example Inbleed System: C3/C5 to C5 Inbleeds**

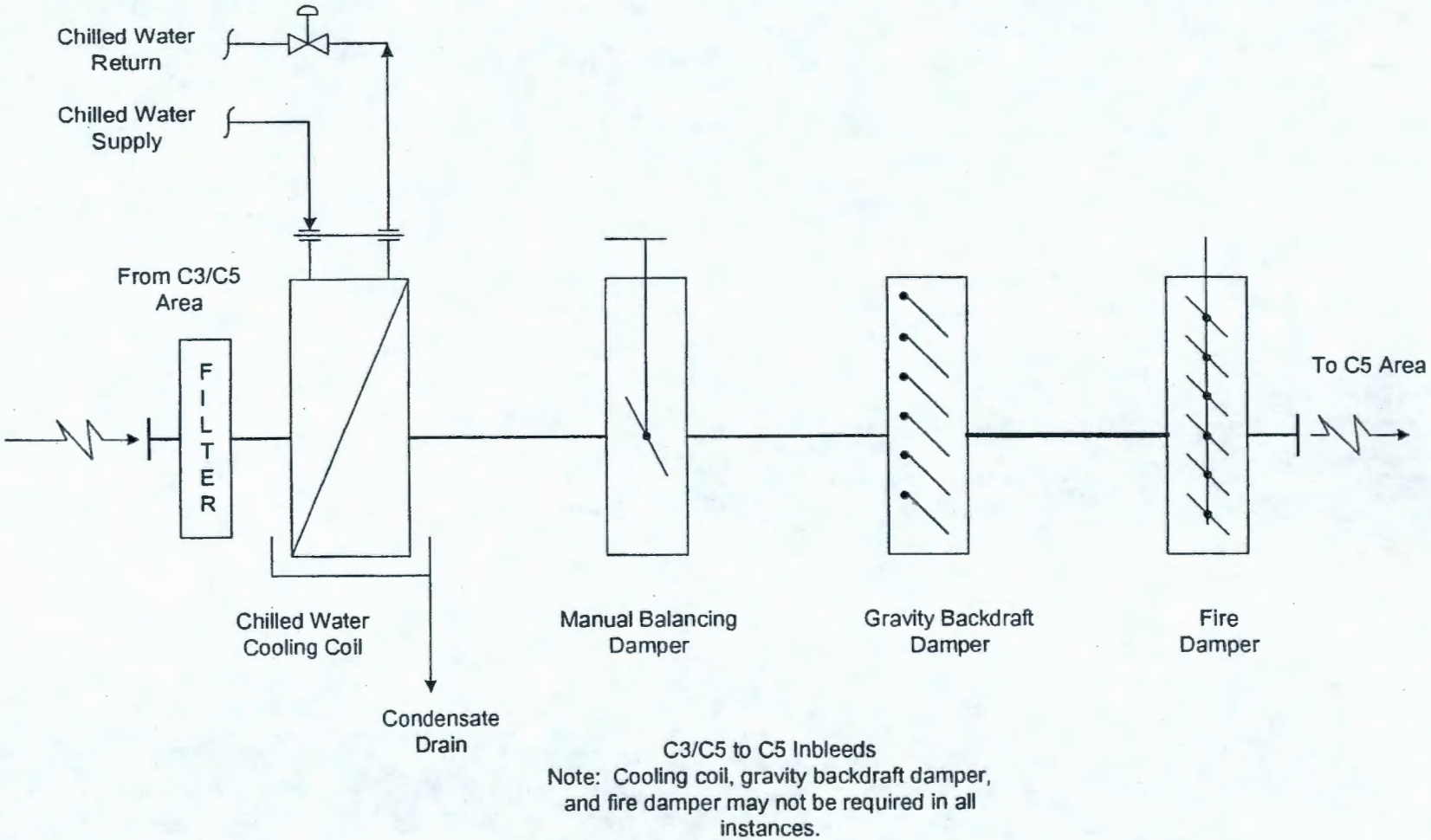

**Figure 5-11 Example Bulge Inbleed System**

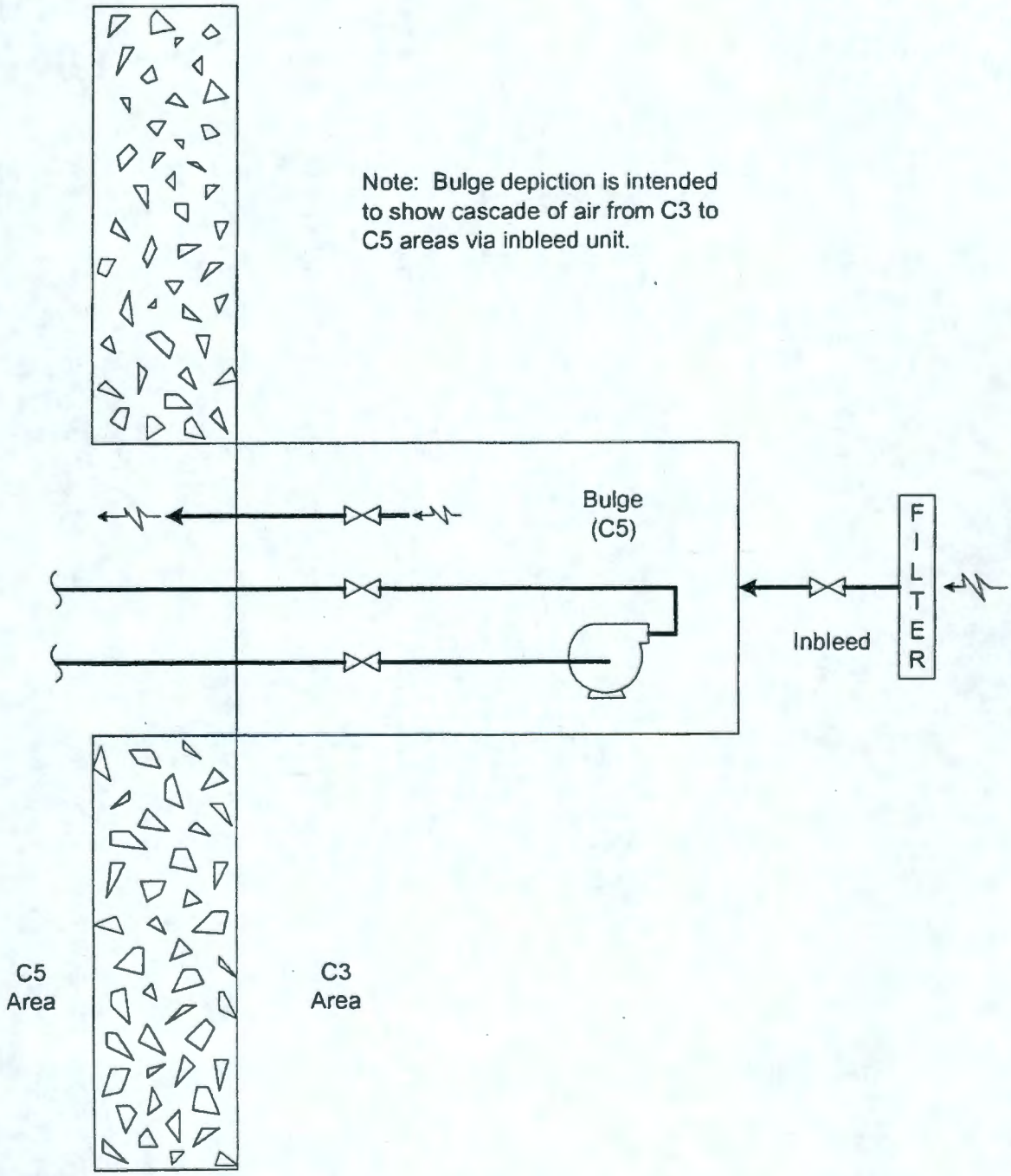

**Figure 5-12 Analytical Laboratory Ventilation System Diagram**

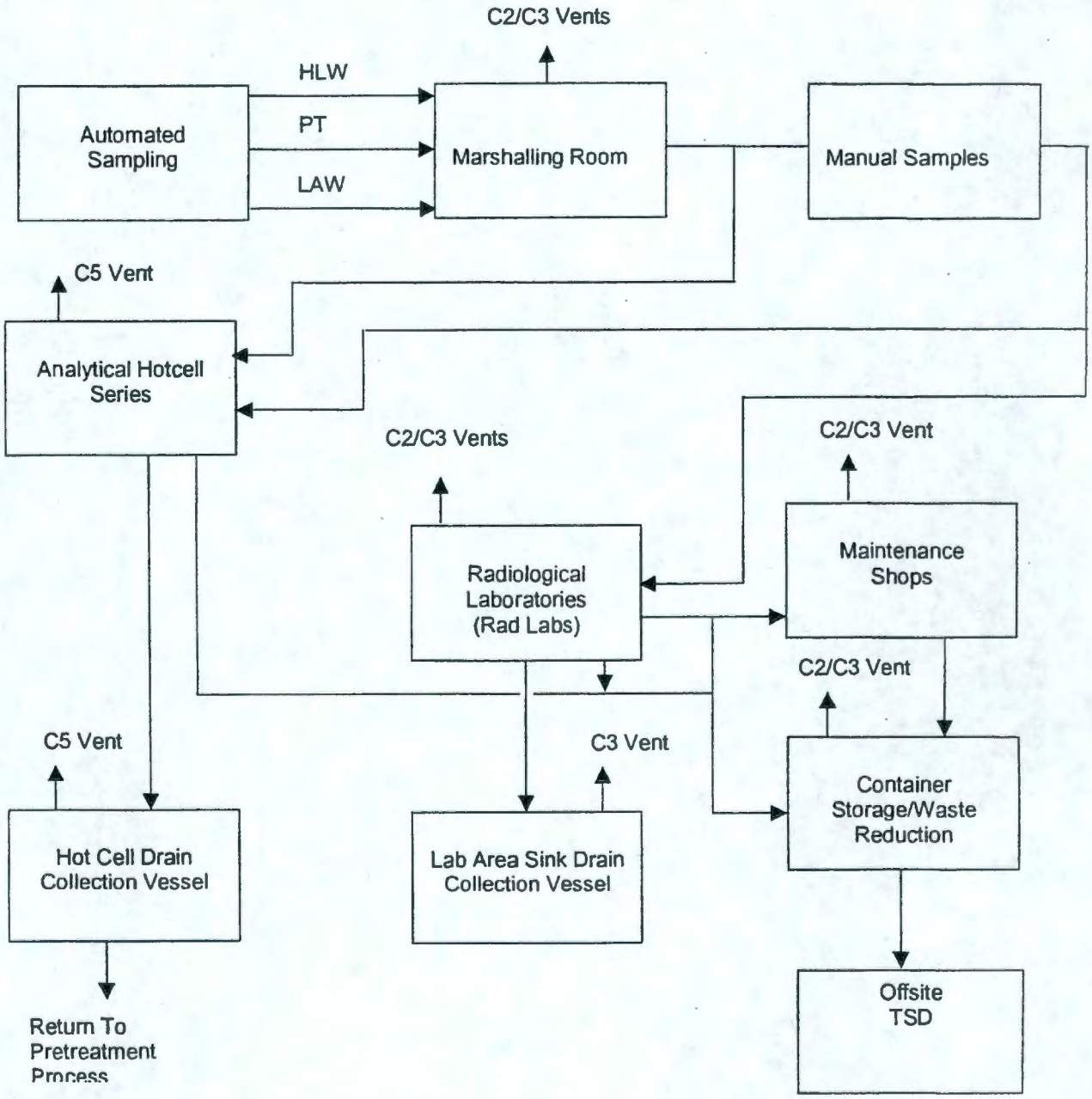

## Contents

6 Proposed Radionuclide Controls ..... 6-1

6.1 Summary of BARCT Analyses ..... 6-1

6.2 Proposed Offgas Treatment Systems for WTP ..... 6-2

6.2.1 Proposed Pretreatment Plant Offgas and Ventilation Treatment Systems ..... 6-2
6.2.2 Redundant System Design ..... 6-4
6.2.3 Proposed LAW Vitrification Plant Offgas Treatment ..... 6-5
6.2.4 Proposed HLW Vitrification Plant Offgas System ..... 6-10
6.2.5 Melter Offgas Maintenance Bypass Systems ..... 6-15
6.2.6 HLW Pulse Ventilation System (Emission Unit HV-S4) ..... 6-17
6.2.7 Immobilized HLW Glass Canister Storage (Emission Unit IHLW-S1) ..... 6-17
6.2.8 Proposed WTP Building Ventilation ..... 6-17
6.2.9 Proposed Analytical Laboratory Offgas System ..... 6-18
6.2.10 Proposed Balance of Facility Offgas Controls ..... 6-19

## Tables

Table 6-1 Results of the Radionuclide Control Analyses ..... 6-21

Table 6-2 Annual Average Volumetric Offgas Flow Rates for Emissions Sources ($m^3/s$) ..... 6-23

## Figures

Figure 6-1 Ventilation Block Diagram Pretreatment Building Ventilation C2, C3, and C5 Area Ventilation ..... 6-24

Figure 6-2 Ventilation Block Diagram LAW Vitrification Building C2, C3, and C5 Area Ventilation ..... 6-25

Figure 6-3 Ventilation Block Diagram HLW Vitrification Building C2, C3, and C5 Area Ventilation ..... 6-26

Figure 6-4 HEPA Filter Design Arrays Details for Emission Unit PT-C2 ..... 6-27

Figure 6-5 HEPA Filter Design Arrays Details for Emission Unit LV-C2 ..... 6-28

Figure 6-6 HEPA Filter Design Arrays Details for Emission Units HV-C2 and HV-C2R ..... 6-29

Figure 6-7 HEPA Filter Design Arrays Details for Emission Unit PT-S1 ..... 6-30

Figure 6-8 HEPA Filter Design Arrays Details for Emission Unit LV-S1 ..... 6-31

Figure 6-9 HEPA Filter Design Arrays Details for Emission Unit HV-S1 ..... 6-32

Figure 6-10 HEPA Filter Design Arrays Details for Emission Unit PT-S2 ..... 6-33

Figure 6-11 HEPA Filter Design Arrays Details for Emission Unit LV-S2 ..... 6-34

Figure 6-12 HEPA Filter Design Arrays Details for Emission Unit HV-S2 ..... 6-35

Figure 6-13 HEPA Filter Design Arrays Details for Emission Unit LB-S2 ..... 6-36
Figure 6-14 HEPA Filter Design Arrays Details for Emission Unit LB-S1 ..... 6-37
Figure 6-15 HEPA Filter Design Arrays Details for Emission Unit LB-C2 ..... 6-38

# 6 Proposed Radionuclide Controls

Best available radionuclide control technology (BARCT) is required by the Washington Sate Department of Health (WDOH) for the construction of Hanford Tank Waste Treatment and Immobilization Plant (WTP) under WAC 246-247-040[3]. A top-down BARCT analysis was performed to select the appropriate controls for radionuclide emissions from the WTP. The BARCT analysis (24590-WTP-RPT-ENV-01-004) was performed for each source of radionuclide gases and particulate matter emissions within the WTP. The analysis was performed based on applicable state and federal regulations and guidance. This section provides the conclusion of the BARCT analysis and the proposed offgas control systems. Table 6-1 presents the proposed BARCT systems and the overall decontamination factors for WTP. The expected annual average volumetric offgas flow rates for the WTP are presented in Table 6-2.

## 6.1 Summary of BARCT Analyses

As shown in Table 6-1, high-efficiency particulate air (HEPA) filters are proposed as BARCT for the primary control of radioactive particulates and aerosols. The BARCT analyses were based on single-stage HEPA filtration with a decontamination factor (DF) of 2000 (or removal efficiency of 99.95 %) and two-stage HEPA filtration with a DF of 200,000 (or 99.9995 %). The pretreatment, LAW, and HLW offgas systems contain additional control equipment. This equipment is included in the proposed system for a variety of reasons. For example, the offgases from LAW and HLW melters are characterized as high-temperature streams. Therefore, it was determined that additional equipment, such as quenching and mist elimination equipment, will be required to protect the HEPA filters in the HLW and LAW vitrification plants. Other equipment is included to control other constituents of potential concern (COPCs), such as organic emissions. Some of this equipment also removes particulates and aerosols. Table 6-1 also provides the overall DF of the radioactive particulate and aerosol air emission systems.

Iodine-129 ($^{129}I$) and carbon-14 ($^{14}C$) are included in the BARCT evaluation for radionuclide gases. As shown in Table 6-1, a caustic scrubber with a removal efficiency of 99 % is proposed as BARCT for the control of $^{129}I$ for the LAW vitrification plant, and a silver mordenite adsorber with a removal efficiency of 99.9 % is proposed as BARCT for the HLW vitrification plant.

The $^{14}C$ emissions are below 0.1 mrem/yr (approximately 2E-02 mrem/yr or lower) for the majority of the process offgas streams, with the exception of the LAW melter offgas (emission unit LV-S3). The LAW vitrification offgas treatment system has incorporated a caustic scrubber for acid and $^{129}I$ gases removal. The caustic scrubber is designed to give a $^{129}I$ removal of 99 % but less than 10 % removal efficiency for the $^{14}C$ gas. Although a higher $^{14}C$ gas removal is possible by operating the caustic scrubber at a higher pH value (pH of 14.7), additional caustic scrubbing or an adsorption sieve would be necessary to accommodate the amount of $CO_2$ gases. The BARCT analysis evaluated the environmental and economic impacts of design and operation to remove additional $^{14}C$ gas from the LAW melter offgas. Based on the unacceptable environmental and economic impacts, it is proposed to control the $^{14}C$ emission through what is removed by operating the caustic scrubber to remove acid and $^{129}I$ gases plus continuous stack sampling.

## 6.2 Proposed Offgas Treatment Systems for WTP

This BARCT analysis provides recommendations for the control of radionuclide particulates and aerosols as well as radionuclide gases. The need to protect the proposed BARCT, such as the HEPA filters and silver mordenite unit, was an integral part of the design philosophy and was reflected in the selection and placement of treatment equipment. One example of this is the removal of acid gas or poisoning reagents as early in the offgas control system as is practicable. For example, a catalytic reduction unit will be located upstream from the silver mordenite unit to prevent fouling of the unit from $NO_x$ emissions. This section briefly describes the proposed offgas treatment systems for abatement of radionuclide emission sources from the WTP.

### 6.2.1 Proposed Pretreatment Plant Offgas and Ventilation Treatment Systems

The pretreatment plant will consist of five separate emission units: PT-C2, PT-S1, PT-S2, PT-S3, and PT-S4 that will emit radionuclide emissions. The emission sources to emission units PT-C2, PT-S1, and PT-S2 will be from the plant building ventilation systems. The offgases from those three streams are expected to be particulate at normal temperature. The emission sources to emission unit PT-S3 will consist of offgases from pretreatment process vessels and the evaporators. The emission sources to emission unit PT-S4 will consist of exhausts from the reverse flow diverters (RFDs) and pulsed jet mixers (PJMs). Those streams are expected to contain particulates, volatile organics, and acid gases at normal temperature. This section describes the proposed offgas treatment systems for emission units PT-S3 and PT-S4. Section 6.2.6 provides the proposed controls for emission units PT-C2, PT-S1, and PT-S2.

For emission unit PT-S3, the process vessel vents will be treated through a caustic scrubber, high-efficiency mist eliminator (HEME), a volatile organic compounds oxidation unit, and carbon bed adsorbers. These vessel vent discharges will include evaporator offgas. This offgas will be processed through condensers and the non-condensable gases will be routed to the vessel ventilation treatment system. For emission unit PT-S4, the RFD/PJM exhausts will be treated through demisters and HEPA filters.

The following provides descriptions of the pretreatment offgas and exhaust treatment components:

- Air inlet (air purge system)
- Collection (exhaust piping system)
- Vessel vent caustic scrubber
- HEMEs and pre-heaters
- Demisters
- Volatile organic compounds oxidation unit
- Carbon bed adsorbers

<u>Air Inlet (Air Purge System)</u>

Because the pretreatment process system design will be essentially an airtight design, the overall gas exhaust flow (except for evaporation, boiling, etc.) will be directly dependent on the air purge rates provided to each individual process vessel.

Continuous air purge to process vessels will be the primary control strategy for radiolytic-produced hydrogen. Additional airflow above the minimum hydrogen control rate may be introduced to each vessel to help balance the system and ensure that all vessels are obtaining the minimum required flow. Additional airflow above the minimum for hydrogen dilution will also be introduced to individual vessels to remove heat by evaporative cooling. This function will help prevent boiling of self-heating tanks during an extended shutdown.

The air inlet header system will be fitted with balance and control valves to regulate flow and a flow measurement device. Each inlet header will obtain air, at atmospheric pressure, from a C3 area and flow to a group of tanks. The supply lines will be designed for the desired balance and total flow regulated at the inlet by the valves.

Collection (Exhaust Piping System)

From the individual process vessels, a vent line will route exhaust to a subheader, usually one for each cell or group of vessels within a cell. The connection to the subheaders from the process vessels will be arranged, where possible, to maintain airflow from normally lower activity vessels to (or past) normally higher activity level vessels. This will help prevent contamination of lower activity vessels due to potential reverse flow or in-breathing. The subheader locations and the overall flow scheme will also be influenced by the plant layout and by the physical location of the major vessel vent headers.

Final sizing of the individual exhaust vent lines will be determined by airflow, process pump capacities for filling vessels, and other potential pressurization scenarios. The individual exhaust vent lines, the subheaders, and the headers will also be sized to minimize overall pressure drop and help balance the system.

Vessel Vent Caustic Scrubber

The vessel vent exhaust streams will be collected for treatment in the caustic scrubber. The scrubber will remove radioactive aerosols, acid gases, and $NO_x$ emissions. The caustic scrubber will be a column with a bed filled with packing material. Sodium hydroxide solution will flow down through the bed while the offgas enters the bottom and is drawn up through packing and caustic solution. Contact between the gas and the liquid in the bed will cause a portion of the $NO_x$ in the vent gas to dissolve and form sodium nitrate. The scrubbing liquor will collect in the sump of the column and the excess will overflow to the pretreatment effluent collection.

After leaving the scrubber, the offgas will flow to the HEMEs. The HEMEs will prevent droplet carryover. Positioning the scrubber upstream of the HEMEs will saturate the gas flow and enable the HEMEs to avoid damage from dry operation. The scrubber will be provided with a bypass line and valve. The bypass function will permit continued operation of the hydrogen control system in the unlikely event that the scrubber becomes plugged or disabled, or during maintenance activities. Waste feed processing will be halted prior to initiating use of the bypass line.

High Efficiency Mist Eliminators and Pre-heater

The HEME will be composed of regenerable deep-bed fiber filters configured in an annular shape to remove fine aerosols. Gas will flow from the outside to the inside hollow core, where the treated gas will exit at the top and the liquid will collect at the sealed bottom in a drainpipe. The HEME will operate wet so that as the liquid aerosols accumulate they will form a liquid film on the filter element and then drop to

the drainpipe. Intermittent water spraying of the filter elements will be used to treat the vessel vent offgas stream.

Three separate HEMEs will be used to treat the vessel vent offgas streams. This configuration will permit washing of each HEME while it is offline. The HEME effluent will be discharged to a drain vessel and then to an effluent vessel.

After treatment in a HEME, the vessel ventilation offgas stream will be heated by the hot air injection system prior to processing through the oxidation unit. The hot air injection system will draw air through HEPA filters from a C3 area. The air will be heated with an electric inline heater so that the combined air stream will be above its dewpoint to prevent condensation in the HEPA filters.

Demisters

The demister vessels will be provided with a number of segmented filter elements that are configured to form a set of long cylindrical filter candles to remove fine aerosols under dry operating conditions. The RFD/PJM exhausts will flow from the outside to the inside hollow core, from which the clean gases will exit at the top.

Three separate demisters will be used to treat the RFD/PJM exhausts. This configuration will allow periodic washing of each demister while it is offline. The washing fluid will be discharged to a drain collection vessel.

After treatment in the demisters, the RFD/PJM exhausts will be mixed with heated C3 area air to maintain a desired relative humidity prior to treatment through the HEPA filters.

Volatile Organic Compound Oxidation Unit

A skid-mounted volatile organic compounds (VOCs) oxidation unit will remove VOCs from the vessel vent stream. This unit will oxidize the VOCs to carbon dioxide, water, and a small amount of acid gases. The skid will be comprised of a heat recovery exchanger, an electric heater, and a residence time chamber for the VOC unit.

The vessel vent stream will be preheated in the heat recovery unit using heat recycled from the thermal oxidation unit offgas. The electric heater will be used to further heat the vessel vent stream to the temperature required at the inlet of the thermal oxidation unit.

Carbon Bed Adsorbers

Two parallel carbon beds will be provided after the oxidation unit. The carbon beds will further reduce volatile organic compounds from the offgas stream. The volatile organic compounds oxidation unit is designed to remove most of the volatile organic compounds from the vessel vent, and the carbon beds will remove the remaining volatile organic compounds. Normal operation will be one unit online while the other is in maintenance and regeneration mode.

### 6.2.2 Redundant System Design

As discussed in section 6.2.1, the proposed controls of radionuclide emissions from the pretreatment processes will include the following equipment:

- Caustic scrubber
- HEME
- HEPA

Redundant systems will be incorporated into the pretreatment offgas treatment systems for HEMEs and HEPA filters. Redundant systems will not be provided for the caustic scrubber because the only sudden failure associated with the caustic scrubber unit may be the failure of the recirculation pump. The WTP design includes a backup recirculation pump to prevent such failure. Other possible failures may be due to plugging of packing material with precipitated solids and corrosion of the caustic scrubber vessel. The plugging of the packing material is expected to be a slow process and adequate time would be available to idle the melter for caustic scrubber maintenance. Leakage due to corrosion may be possible if the offgas stream is not compatible with the caustic scrubber material of construction. The WTP caustic scrubber unit will be constructed of materials that will be compatible with the expected offgas stream. Material compatibility study data will be used to aid the final material selection for the caustic scrubber unit. The WTP operation will include periodic visual inspections for signs of corrosion. Corrective action will be taken when appropriate.

### 6.2.3 Proposed LAW Vitrification Plant Offgas Treatment

The LAW vitrification plant will consist of five emission units, LV-C2, LV-S1, LV-S2, LV-S3, and ILAW-C2, that have potential to emit radionuclides. The emission sources to emission units LV-C2, LV-S1, LV-S2, and ILAW-C2 will consist of offgases from plant building ventilation systems. The offgases from those streams are expected to be particulate at normal temperature. The emission sources to emission unit LV-S3 will consist of offgases from the LAW melters and process vessels. This stream is expected to contain particulates, radioactive gases, volatile organics, and acid gases at relatively high temperature and moisture content. Sections 6.2.3.1 and 6.2.3.2 describe the proposed LAW vitrification plant offgas treatment systems for emission unit LV-S3. The ILAW container storage area, emission unit ILAW-C2, is discussed in section 6.2.3.3. Section 6.2.6 provides the proposed controls for emission units LV-C2, LV-S1, and LV-S2.

#### 6.2.3.1 Proposed LAW Melter Offgas System (Emission Unit LV-S3)

The proposed LAW melter offgas system will consist of the following systems:

- LAW primary offgas treatment system
- LAW secondary offgas treatment system

Melter offgas will be generated from the vitrification of LAW in the two joule-heated ceramic melters. The rate of generation of gases in the melter will be dynamic and not steady state. The melters will generate offgas resulting from decomposition, oxidation, and vaporization of feed material. Constituents of the offgas include:

- Nitrogen oxides ($NO_x$)
- Chloride, fluoride, and sulfur as oxides, acid gases, and salts
- Radionuclide particulates and aerosols

In addition, the LAW melters will generate small quantities of other volatile compounds including $^{129}I$, $^{14}C$, tritium ($^{3}H$), and organics.

The purpose of the LAW offgas system is to cool and treat the melter offgas and vessel ventilation offgas to a level that is protective of human health and the environment. The offgas system must also provide a confinement boundary that will prevent vapor release to the melter enclosure. The design of the melter offgas systems needs to accommodate changes in offgas flow from each melter without allowing variations in the flow from one melter to impact the other melter.

Separate systems will be provided for the initial decontamination of offgas from each melter. This is known as the primary offgas treatment system. The primary offgas system is designed to handle intermittent surges of seven times steam flow and three times non-condensable flow from feed. The primary system will consist of a film cooler, SBS, and a wet electrostatic precipitator (WESP). This system will cool the offgas and remove particulates.

Additionally, an extra line from the melter to the SBS will be provided in case restrictions occur in the primary offgas line. This extra line will be composed of a film cooler and a butterfly valve as the isolation device. As soon as the melter vacuum decreases to a set point, the butterfly valve will actuate and offgas flow will pass through the extra line to the SBS, thereby preventing melter pressurization. In the event that the melter surge is much higher than the system is designed to handle, a pressure relief device will act as the pressure relief point venting the offgas to the wet process cell.

The vessel ventilation header will be combined with the offgases from the WESPs and routed to the secondary offgas treatment system. The secondary offgas system will be designed to handle maximum sustained flow rate from the two melters, assuming both melters are operating. The system will be capable of operating effectively if only one melter is running. The secondary offgas system will consist of HEPA filters with preheater, exhausters, a catalytic oxidizer/reducer unit, and a caustic scrubber. The following sections provide descriptions of melter offgas treatment components.

#### 6.2.3.1.1 LAW Primary Offgas Process System

The purpose of the primary offgas treatment system is to cool the offgas and remove aerosols generated by the melter. The primary components will consist of a film cooler, SBS, and a wet electrostatic precipitator.

Film Cooler

The function of the film cooler is to cool the offgas below the particulate sticking temperature to minimize solids deposition on the offgas piping walls. The offgas will exit the melter and mix with air or steam/air mixture in the offgas film cooler. Each melter will have a film cooler. The film cooler will be a double-walled pipe designed to introduce injected gas axially along the walls of the offgas pipe through a series of holes or slots in the inner wall.

Submerged Bed Scrubber (SBS)

Each LAW melter will have a dedicated SBS. After each film cooler, the offgas will enter the SBS column for further cooling and solids removal. The SBS will be a passive device designed for aqueous scrubbing of entrained radioactive particulate from melter offgas, cooling and condensation of melter vapor emissions, and interim storage of condensed fluids. It will also quench the offgas to a desired

discharge temperature through the use of cooling coils/jacket. The offgas will exit the SBS in thermal equilibrium with the scrubbing solution.

The SBS will have two offgas inlets, one for the normal operations line and one for the standby line. The offgas will enter the SBS through the appropriate inlet pipe that runs down through the center of the bed to the packing support plate. The bed-retaining walls will extend below the support plate, creating a lower skirt that will allow release of the gas underneath the packing. The entire bed will be suspended off the floor of the SBS to allow the scrubbing solution to circulate freely through the bed. After release of the gas beneath the packing, the injected offgas will then bubble up through the packed bed. The rising gas bubbles will also cause the scrubbing liquid to circulate up through the packed bed, resulting in a general recirculation of the scrubbing solution. The packing will break larger bubbles into smaller ones to increase the gas-to-water contacting surface, thereby increasing particulate removal and heat transfer efficiencies. The warmed scrubbing solution will then flow downward outside of the packed bed through cooling coils/jacket.

The scrubbed offgas will discharge through the top of the SBS and will be routed to the wet electrostatic precipitator for further particulate removal.

Wet Electrostatic Precipitator (WESP)

The SBS offgas will be routed to the WESP for removal of aerosols including submicron sizes. Each melter system will have a dedicated wet electrostatic precipitator. The offgas will enter at the top of the unit and pass through a distribution plate. The distributed saturated gas will then flow downward through the tubes. The tubes will act as positive electrodes. Each of the tubes will have a single negatively charged electrode, which runs down the center of the tube. A high voltage, direct current transformer will supply power to the electrodes. A strong electric field will be generated along the electrodes giving a negative charge to the aerosols passing through the tubes. The negatively charged particles will move toward the positively charged tube walls for collection. Collected particles will then be washed from the tube walls along with collected mists. As the gas passes through the tubes, the first particles captured will be the water droplets. As the water droplets gravity drain through the electrode tubes, the collected particles will be washed off and the liquid is drained to the WESP dished bottom area. A water spray may be used periodically to facilitate washing collected aerosols from the tubes. The tube drain and wash solution will drain to a collection vessel.

#### 6.2.3.1.2 Standby Primary Offgas Treatment System

The standby line will consist of an offgas duct from the melter to the SBS, an isolating valve, and a relief device. The standby offgas duct will extend to the bottom of the SBS packed bed, identical to the main offgas line. It will be the same size as the main offgas line, thus providing a doubling of flow cross-section for melter-generated gases. During an unlikely event of melter surge beyond design basis, the pressure relief device valve will open, providing an alternative path for the melter offgas to flow.

#### 6.2.3.1.3 Vessel Ventilation Offgas Treatment

The vessel ventilation offgas system will prevent migration of waste contaminates into the process cells and operating areas. It will do this by maintaining the various LAW process vessels under a slight vacuum relative to the cell. The composition of the ventilation air is expected to be primarily air with slight chemical and radioactive particulate contamination.

The vessel ventilation air will be combined with the melter offgas prior to entering the secondary offgas system HEPA filter preheater. The combined air streams will be treated together in the remaining sections of the secondary offgas treatment systems. A pressure control device will be used to regulate the pressure between the vessel ventilation offgas system and the melter offgas system.

#### 6.2.3.1.4 LAW Secondary Offgas/Vessel Vent Process System

The melter offgas stream that is treated through the primary offgas system will be combined with the vessel ventilation offgas stream and treated through the LAW secondary offgas system. This system will remove the remaining particulate, miscellaneous acid gases, $NO_x$, and volatile organic compounds. Major components in the system include the HEPA preheaters and filters, catalytic oxidizer and reducer unit, and a caustic scrubber. Descriptions of those components are provided below.

HEPA Preheaters, Filters, and Exhauster

Next, the offgas will be heated, using an electric preheater, to a temperature above the gas stream's dew point and then passed through a two-stage HEPA filtration to provide high-efficiency submicron removal. The offgas will be heated to avoid condensation in the HEPA filters. The HEPA filters will provide a combined particulate removal efficiency greater than 99.9995 %. When the differential pressure drops or radiation levels across the filters become too high, they will be remotely changed out. The system is comprised of two HEPA filter trains. The offgas passes through one filter train while the other remains available as an installed backup.

Catalytic Oxidizer/Reducer Unit

To remove volatile organic compounds and $NO_x$ in the offgas stream, a catalyst unit with a combined thermal catalytic oxidizer unit and a $NO_x$ selective catalytic reduction unit will be used. These units will incorporate a heat recovery exchanger, an electric heater, a thermal catalyst oxidation bed, and a $NO_x$ selective catalytic reduction bed. In this catalyst skid, organic compounds will be oxidized to carbon dioxide ($CO_2$), water vapor, and possibly acid gases (depending on the halogenated volatile organic compound present in the stream). Also, $NO_x$ will be reacted with ammonia to reduce it to nitrogen gas and water vapor. The catalytic reduction unit will have little effect in removing particulate radionuclides that may be present in the offgas. However, particulate radionuclides will have been removed upstream by HEPA filtration.

As the offgas enters the unit, it will travel through the heat recovery unit, which is a plate heat exchanger. The heating medium used will be the exhaust from the catalytic oxidizer/reducer unit. The cool offgas will enter the cold side of the heat recovery unit, then pass through an electric heater to bring the temperature up to that required for the volatile organic compound catalyst to operate.

The volatile organic compound catalyst column will operate at a somewhat lower temperature than the $NO_x$ catalyst; therefore, it will be placed at the beginning of the unit. This arrangement will also prevent the formation of $NO_x$ through the volatile organic compound catalyst from the oxidation of ammonia, which will be added after the gas goes through the volatile organic compound catalyst. Depending on the concentrations of volatile organic compounds, some offgas heating will occur through the volatile organic compound catalyst, as the reactions occurring will be exothermic.

After the volatile organic compound catalyst, the offgas will enter a chamber where either ammonia or a urea solution will be injected through an atomized spray and allowed to mix with the offgas. Urea, an

ammonia source, will be added so that the $NO_x$ reduction reactions can be carried out. Two sets of $NO_x$ catalyst modules are required to achieve the required removal efficiency of greater than 98 %. The offgas will be treated through the first set of $NO_x$ catalyst modules. After the first module, more ammonia or urea will be injected into the stream to allow further conversion in the second set. The offgas will then go through the second catalyst module. Reduction of $NO_x$ is an exothermic reaction and significantly increases the offgas temperature. This hot offgas will then enter the hot side of the heat recovery unit to heat the incoming offgas. The cooled offgas stream will then be directed to the caustic scrubber for iodine removal, acid gas removal, and final cooling.

Caustic Scrubber

The caustic scrubber will treat the melter offgas by removing $^{129}I$ and acid gases and provide final offgas cooling. Some of the process-generated $CO_2$ will also be removed in this scrubber. The $CO_2$ gas will be neutralized to sodium bicarbonate.

The offgas stream will enter the bottom of the scrubber and flow upward through a packed bed. Contaminates in the offgas stream will be absorbed into the liquid stream through interaction of the gas, liquid, and packing media. To neutralize the collected acid gases, a sodium hydroxide solution will be added. The treated offgas will then be discharged through a mist eliminator. After the caustic scrubber, the offgas will be vented to the environment via emission unit LV-S3.

### 6.2.3.2 Redundant System Design

As discussed in section 6.2.3.1, the proposed controls of radionuclide emissions from the LAW vitrification processes will include SBS, WESP, and HEPA filters. Redundant systems will be incorporated into the LAW offgas treatment system for the HEPA filters. However, redundant systems will not be provided for the SBS and WESP within the LAW vitrification plant.

The SBS is a passive device whose potential failure modes are slow and detectable by changes in operating parameters such as pressure differentials. Typical failure may be due to solids accumulation on the packed bed material. If the packed bed begins to accumulate solids, the pressure differential will increase. This would be a slow process, since the amount of solids in the offgas is relatively low. Furthermore, available data has shown that solids accumulation does not have significant impact on the SBS's efficiency. The pilot SBS unit has performed within acceptable range when pressure drops have increased as much as 50 %. The WTP SBS will be constructed with material that is compatible with the offgas stream and condensate. Material compatibility study data will be used to aid the final material selection for SBS. WTP will conduct periodic visual inspections for signs of corrosion and take appropriate corrective actions.

The WESP unit has been demonstrated to be highly reliable in both commercial and nuclear applications. For example, WESP units have been in service for approximately 14 years at the Sellafield vitrification facility in the United Kingdom without requiring maintenance. Leakage due to corrosion may be possible if the offgas stream is not compatible with the WESP unit's material of construction. The WTP WESP unit will be constructed of a material that is compatible with the expected offgas stream. Material compatibility study data will be used to aid the final material section for the WESP unit. The WTP operation will include periodic visual inspections for signs of corrosion. Corrective action will be taken when appropriate. Another possible failure is the fouling of the WESP electrodes. This type of failure is expected to be slow occurring and detectable by voltage and current changes.

#### 6.2.3.3 Immobilized LAW Glass Container Storage (Emission Unit ILAW-C2)

The decontaminated immobilized LAW (ILAW) containers will be stored at the ILAW container storage canister area, which will be located adjacent to the LAW vitrification plant.

The ILAW containers will be constructed of steel that is physically and chemically compatible with the glass waste. All of the ILAW containers will be decontaminated and sealed through welding. A request for sealed source determination of the vitrified glass is provided in Appendix A of this submittal. Visual inspection will be conducted to ensure complete enclosure. Under normal operating conditions, the ILAW containers are not expected to produce significant radioactive emissions from the residual surface contamination. The BARCT analysis evaluated the environmental and economic impacts of controls to reduce the expected emissions. Based on unacceptable environmental and economic impacts, it is proposed to control the potential emissions through planned ILAW container decontamination processes.

### 6.2.4 Proposed HLW Vitrification Plant Offgas System

The HLW vitrification plant will consist of eight separate emission units, HV-C2, HV-C2R, HV-S1, HV-S2, HV-S3A, HV-S3B, HV-S4, and IHLW-S1, which will emit radionuclide emissions. The emission sources to emission units HV-C2, HV-C2R, HV-S1, HV-S2, and IHLW-S1 will consist of offgases from plant building ventilation systems. The offgases from those streams are expected to be particulate at normal temperature. The emission source to emission unit HV-S3A and HV-S3B will consist of offgases from HLW melters and process vessels. This stream is expected to contain particulates, radioactive gases, volatile organics, and acid gases at relatively high temperature and moisture content. The emissions from HLW RFD and PJMs will be vented through emission unit HV-S4. This stream is expected to be particulate at normal temperature. Emissions from IHLW canister storage area will be vented through emission unit IHLW-S1. Sections 6.2.4.1 and 6.2.4.2 provide a description of the proposed control system for emission units HV-S3A, HV-S3B, and HV-S4. Section 6.3.4.4 describes the proposed control for emission unit IHLW-S1. Section 6.2.6 provides the proposed controls for emission units HV-C2, HV-C2R, HV-S1, and HV-S2.

#### 6.2.4.1 Proposed HLW Melter Offgas Systems (Emission Units HV-S3A and HV-S3B)

The HLW melter offgas treatment process system will consist of the following systems:

- HLW primary offgas treatment system
- HLW secondary offgas treatment system
- HLW RFD/PJM exhaust treatment system

Melter offgas will be generated from the vitrification of HLW in the two joule-heated ceramic melters. The rate of generation of gases in the melters is dynamic and not steady state. The melters will generate offgas resulting from decomposition, oxidation, and vaporization of feed material. Constituents of the offgas will include:

- Nitrogen oxides ($NO_x$)
- Chloride, fluoride, and sulfur as oxides, acid gases, and salts
- Radionuclide particulates and aerosols

In addition, the HLW melters will generate small quantities of other volatile compounds including $^{129}I$, $^{14}C$, $^{3}H$, and volatile organic compounds. The $^{14}C$ and $^{3}H$ emissions will be in the form of $CO_2$ and water, respectively.

The purpose of the HLW offgas treatment process system is to cool and treat the melter offgas and vessel ventilation offgas to a level that is protective of human health and the environment. The offgas system must also provide a confinement boundary that will control melter pressure and prevent vapor release to the plant. The design of the melter offgas system must accommodate changes in offgas flow from the melter without causing the melter to pressurize.

Initial decontamination of offgas from the melter will be provided by the primary offgas treatment system. This primary offgas system is designed to handle intermittent surges of seven times steam flow and three times non-condensable flow from feed. The primary system will consist of a film cooler, SBS, a wet electrostatic precipitator, and a high efficiency mist eliminator and HEPAs. This system will cool the offgas and remove particulates.

Additionally, an extra line from the melter to the SBS will be provided in the unlikely case that the primary offgas line plugs. This extra line will include a valve as the isolation device. As soon as the melter vacuum decreases to a set point, the valve will be actuated and offgas flow will pass through the extra line to the SBS, thereby preventing melter pressurization. In the event that the melter surge is much higher than the system is designed to handle, a relief device will vent the offgas to the melter cell.

The vessel ventilation header will join the primary offgas system after the wet electrostatic precipitator. After the HEPAs, the offgas will be routed to the secondary offgas treatment system. The offgas received through the vessel ventilation system will consist primarily of air, water vapor, and minor amounts of aerosols generated by the agitation or movement of vessel contents.

The secondary offgas system is designed to handle maximum sustained flowrate from the melter. The secondary offgas system will consist of a heat recovery unit, exhausters, a catalytic oxidizer/reducer unit, and a silver mordenite adsorption unit. The following sections provide descriptions of major melter offgas treatment components. The two HLW melters will each have a dedicated offgas treatment process system, and the following descriptions apply to both of the melter offgas treatment process systems.

#### 6.2.4.1.1 Primary Melter Offgas Treatment System

The purpose of the primary offgas treatment system is to cool the melter offgas and to remove aerosols generated by the melter and from the vessel ventilation air. This treatment system will consist of a film cooler, an SBS, a wet electrostatic precipitator, a high-efficiency mist eliminator, an electric heater, and high-efficiency particulate air filters.

Film Cooler

The function of the film cooler is to cool the offgas below the glass sticking temperature to minimize solids deposition on the offgas piping walls. The offgas will exit the melter and be mixed with air in the offgas film cooler. Each melter will have a film cooler. The film cooler will be a double-walled pipe designed to introduce injected gas axially along the walls of the offgas pipe through a series of holes or slots in the inner wall.

A mechanical reamer may be mounted on the film cooler to periodically remove solids build-up on the inner film cooler wall. The reaming device (wire brush or drill) would be periodically inserted into the film cooler for mechanical solids removal.

Submerged Bed Scrubber (SBS)

The offgas from the HLW melter will be further treated by an SBS. The offgas will enter the SBS column for cooling and solids removal. The SBS will be a passive device designed for aqueous scrubbing of entrained particulate from melter offgas, cooling and condensation of melter vapor emissions, and interim storage of condensed fluids. It will also quench the offgas to a desired discharge temperature. The scrub solution is cooled through the use of cooling coils/jacket. The offgas will leave the SBS in thermal equilibrium with the scrubbing solution.

The SBS will have two offgas inlets, one for the normal operations line and one for the standby line. The offgas will enter the SBS through the appropriate inlet pipe that will run down through the center of the bed to the packing support plate. The bed-retaining walls will extend below the support plate, creating a lower skirt that will allow the formation of a gas bubble underneath the packing. The entire bed will be suspended off the floor of the SBS to allow the scrubbing solution to circulate freely through the bed. After formation of the gas bubble beneath the packing, the injected offgas will then bubble up through the packed bed. The rising gas bubbles will also cause the scrubbing liquid to circulate up through the packed bed, resulting in a general recirculation of the scrubbing solution. The packing will break larger bubbles into smaller ones to increase the gas-to-water contacting surface, thereby increasing particulate removal and heat transfer efficiencies. The warmed scrubbing solution will then flow downward outside of the packed bed. The vessel is provided with cooling coils and a jacket to remove heat. The scrubbed offgas will discharge through the top of the SBS and be routed to the wet electrostatic precipitator for further particulate removal.

Wet Electrostatic Precipitator (WESP)

The SBS offgas will be routed to the WESP for removal of aerosols, including submicron sizes. The offgas will enter at the bottom of the unit and may pass through a distribution plate. The distributed saturated gas will then flow upward through the tubes. The tubes will act as positive electrodes. Each of these tubes will have a single negatively charged electrode, which runs down the centerline of each tube. A high voltage, direct current transformer will supply the power to the electrodes. A strong electric field generated along the electrodes will give a negative charge to the aerosols. The negatively charged particles will move toward the positively charged tube walls for collection. Collected particles will then be washed from the tube walls along with collected mists. As the gas passes through the tubes, the first particles captured will be the water droplets. As the water droplets gravity drain through the electrode tubes, the collected particles will be washed off and the liquid is drained to the WESP dished bottom area. A water spray may be used periodically to facilitate washing of collected aerosols from the tubes. The tube drain and wash solution will drain to a collection vessel.

High Efficiency Mist Eliminator (HEME)

Further removal of radioactive aerosols will be accomplished using the HEME. This reduces the dust-loading rate on the HEPA filters. An HEME has a removal efficiency of greater than 99 % for aerosols down to the submicron size. As the offgas passes through the HEME, the liquid droplets and other aerosols within the offgas will interact with HEME filaments. As the aerosols contact the filaments, they will adhere to the filament's surface by surface tension. As the droplets agglomerate and grow, they

eventually acquire enough mass to fall by gravity to the bottom of the unit, thus overriding the original surface tension, friction with the filaments, and the gas velocity. The agglomerated droplets will be collected in the bottom of the HEME. The condensate will be collected and gravity drain into an SBS condensate vessel. As the condensate flows down through the filter bed, a washing action will be generated that will help wash collected solids from the filter elements. However, some solids may accumulate in the bed over time, causing the pressure drop across the filter to increase. When the pressure drop across the HEME reaches a predefined level, it will be washed with process water to facilitate removal of accumulated solids. Some insoluble solids may remain, and their accumulation will eventually lead to the replacement of the HEME filter elements.

HEPA Preheaters, Filters, and Exhauster

Next, the offgas will be heated using an electric preheater to a temperature above the gas stream's dew point and then pass through a dual set of HEPA filters to provide high-efficiency submicron removal. The offgas will be heated to avoid condensation in the HEPA filters. The HEPA filters will provide a combined particulate removal efficiency greater than 99.9995 %. When the differential pressure drops across the filters become too high, they will be remotely changed out. The system will be comprised of two parallel heaters and HEPA filter trains. The offgas will pass through one train while the other remains available as an installed backup.

#### 6.2.4.1.2 Standby Primary Offgas Treatment System

The standby line will consist of an offgas duct from the melter to the SBS, an isolation valve, and a pressure relief device. The standby offgas duct will extend to the bottom of the SBS packed bed, identical to the main offgas line. It will be the same size as the main offgas line, thus providing a doubling of flow cross-section for melter-generated gases. During an unlikely event of melter surge beyond design basis, the pressure relief device valve will open rapidly, providing an alternative path for the offgas to flow. With this alternative routing, pressure control on the melter plenum can be maintained.

#### 6.2.4.1.3 Vessel Ventilation Offgas Treatment

The vessel ventilation offgas system will prevent migration of waste contaminates into the process cells and operating areas. It will do this by maintaining the various HLW process vessels under a slight vacuum relative to the cell. The composition of the ventilation air is expected to be primarily air with slight chemical and radioactive particulate contamination.

The vessel ventilation air will be combined with the melter offgas prior to entering the primary offgas system HEMEs. The combined air streams will be treated together in the remaining sections of the primary and secondary offgas treatment systems. A pressure control device will be used to regulate the pressure between the vessel ventilation offgas system and the melter offgas system.

#### 6.2.4.1.4 Secondary Offgas Treatment System

The combined primary offgas stream and vessel ventilation offgas stream will be discharged to the secondary offgas treatment system. The secondary offgas system will treat the combined offgas to a level protective of human health and the environment. Specifically, the secondary offgas treatment system will remove radioactive iodine, volatile organic compounds, and acid gases, as required, to meet the facilities' air discharge requirements. The secondary offgas treatment system will consist of an organic thermal catalytic oxidizer unit, $NO_x$ selective catalytic reduction unit, and a silver mordenite column.

Catalytic Oxidizer/Reducer Unit

To remove volatile organic compounds and $NO_x$ in the offgas stream, a catalyst unit with a combined thermal catalytic oxidizer unit and a $NO_x$ selective catalytic reduction unit will be used. These units will incorporate a heat recovery exchanger, an electric heater, a thermal catalyst oxidation bed, and a $NO_x$ selective catalytic reduction bed. In this catalyst skid, organic compounds will be oxidized to carbon dioxide ($CO_2$), water vapor, and possibly acid gases (depending on the halogenated volatile organic compounds present in the stream). Also, $NO_x$ will be reacted with ammonia to reduce it to nitrogen gas and water vapor. The catalytic reduction unit will have little effect in removing particulate radionuclides that may be present in the offgas. However, particulate radionuclides will have been removed upstream by HEPA filtration.

As the offgas enters the unit, it will travel through the heat recovery unit, which is a plate heat exchanger. The heating medium used will be the exhaust from the catalytic oxidizer/reducer unit. The cool offgas will enter the cold side of the heat recovery, then pass through an electric heater to bring the temperature up to that required for the volatile organic compound catalyst to operate.

The volatile organic compound catalyst column will operate at the same temperature as the $NO_x$ catalyst. This arrangement will also prevent the formation of $NO_x$ through the volatile organic compound catalyst from the oxidation of ammonia, which will be added after the gas goes through the volatile organic compound catalyst. Depending on the concentrations of volatile organic compounds, some offgas heating will occur through the volatile organic compound catalyst, as the reactions occurring will be exothermic.

After the volatile organic compound catalyst, the offgas will enter a chamber where ammonia will be injected through an atomized spray and allowed to mix with the offgas. The $NO_x$ catalyst modules are required to achieve the required removal efficiency of greater than 95 %. The offgas will be treated through the first set of $NO_x$ catalyst modules. The offgas will then go through the second catalyst module. Reduction of $NO_x$ is an exothermic reaction and significantly increases the offgas temperature. This hot offgas will then enter the hot side of the heat recovery unit to heat the incoming offgas. The cooled offgas stream will then be directed to the silver mordenite adsorber for iodine removal and acid gas removal.

Silver Mordenite Adsorber

The silver mordenite adsorber will be present to remove halogens. Silver mordenite will be an absorbent in the form of cylindrical pellets contained in cartridges. The absorbent is expected to lose effectiveness over time and will require replacement. Halogens will react with the silver in the bed and be trapped within the matrix. Loading will begin at the front of the silver mordenite beds and progressively load the silver through the column until breakthrough is reached at the end of the column. Absorption reactions occur within a reaction zone (or mass transfer zone) that varies in length depending on the temperature of the bed and the gas velocity through the bed. The adsorber unit structure will be similar to that in a carbon bed absorber. The adsorber unit will not be a tank-like structure, but will instead be a bank of cartridges through which the gas stream will be directed. The absorbent cartridges allow for manual removal and replacement when required or after a predetermined life span and will be sized to fit into standard waste drums for disposal.

#### 6.2.4.2 Redundant System Design Consideration

As presented in section 6.2.4.1, the proposed controls of radionuclide emissions from the HLW vitrification processes will include SBS, WESP, HEME, HEPAs, and the silver mordenite adsorption units. These systems exist in both redundant and non-redundant arrangements. The HEME and HEPA filter systems have been designed to provide for redundancy. Two HEMEs will be arranged to allow one system to handle the offgas while one system is available as backup. The HEPA filters will be comprised of two parallel heaters and HEPA filter trains where the offgas will pass through one train while the other remains available as an installed backup.

At this time, redundant system design will not be provided for the SBS, WESP, or the silver mordenite adsorption unit. The following discusses the non-redundant design approach for those systems.

The SBS is a passive device whose potential failure modes are slow and detectable by changes in operating parameters such as pressure differentials. Typical failure may be due to solids accumulation on the packed bed material. If the packed bed begins to accumulate solids, the pressure differential will increase. This would be a slow process, since the amount of solids in the offgas is relatively low. Adequate time would be available to idle the melter and activate the maintenance bypass. Furthermore, available data has shown that solids accumulation does not have significant impact on the SBS's efficiency. The pilot SBS unit has performed within acceptable range when pressure drops have increased as much as 50 %. The WTP SBS will be constructed with material that is compatible with the offgas stream and condensate. Material compatibility study data will be used to aid the final material selection for SBS.

The WESP unit has been demonstrated to be highly reliable in both commercial and nuclear applications. For example, WESP units have been in service for approximately 14 years at the Sellafield vitrification facility in the United Kingdom without requiring maintenance. Leakage due to corrosion may be possible if the offgas stream is not compatible with the WESP unit's material of construction. The WTP WESP unit will be constructed of a material that is compatible with the expected offgas stream. Material compatibility study data will be used to aid the final material section for the WESP unit. The WTP operation will include periodic visual inspections for signs of corrosion. Corrective action will be taken when appropriate. Another possible failure is the fouling of the WESP electrodes. This type of failure is expected to be slow occurring and detectable by voltage and current changes.

The silver mordenite adsorption unit has no identified mode of rapid failure. The silver mordenite media will be replaced when its decreased adsorption capacity, indicated by halogen partial breakthrough, is detected. The performance of the silver mordenite media will be monitored by the level of $^{129}I$ in the effluent. Based on the known characteristic of HLW offgas, the silver mordenite media will be replaced prior to $^{129}I$ breakthrough. Other nonradioactive halogens such as chloride (Cl) or fluoride (F) in the offgas are expected to be present at higher concentrations than $^{129}I$; therefore, the adsorption capacity of the silver mordenite will be exhausted by the nonradioactive constituents rather than the $^{129}I$. The concentration level of the nonradioactive constituents in the effluent will determine the replacement schedule of the silver mordenite media.

### 6.2.5 Melter Offgas Maintenance Bypass Systems

The vitrification offgas treatment systems will have the following maintenance bypass systems:

- Submerged bed scrubber and wet electrostatic precipitator bypass (for primary offgas treatment systems)
- Caustic scrubber or silver mordenite bypass (for secondary offgas treatment systems)

Descriptions of these bypass systems are provided below.

### 6.2.5.1 Primary Offgas Treatment Bypass

The HLW vitrification primary offgas treatment system will have a ventilation line that will bypass the film cooler, submerged bed scrubber (SBS), and the wet electrostatic precipitator (WESP) units during non-routine maintenance. This bypass is not required for routine maintenance of these units.

Prior to initiating use of the maintenance ventilation line, waste feed will be halted and the melter placed into an idle condition. The SBS and WESP will remain on-line until the cold cap has burned off. The time required to reach this level will be between 30 minutes to one hour. No waste feed will be fed to the melter when the maintenance bypass line is in use. The offgas will still be processed through the remaining treatment system that includes the high efficiency mist eliminator (for HLW vitrification plant only), HEPA filtration, caustic scrubber or silver mordenite adsorption unit, thermal catalytic oxidation, and selective catalytic reduction.

Idling emissions from the melter will mainly be heated air at a fraction of the gas volume expected during slurry feeding. Based on current understanding of the melter offgas characteristics, the resulting melter emissions during idling are expected to be substantially lower for most radioactive components, with the exception of cesium-137 ($^{137}Cs$) and technetium-99 ($^{99}Tc$).

Carbon-14 ($^{14}C$) and tritium ($^{3}H$) are not expected to be present in the melter offgas during idling. The $^{129}I$ gas is expected to decrease rapidly after melter feed is terminated; this radionuclide will be treated with caustic scrubber or silver mordenite. $^{137}Cs$ and $^{99}Tc$ may volatilize during initial melter idling. However, $^{137}Cs$ and $^{99}Tc$ are expected to be present as aerosols after being cooled in the maintenance by-pass line. The offgas leaving the melter through the film cooler is cooled to an approximate range of 200 °C to 400 °C (392 °F to 752 °F). This means it has a significant vapor pressure at high temperatures (such as in the glass melt) and therefore can evaporate from the glass. However, at temperatures present in the offgas system, the vapor pressure of $^{99}Tc$ is negligible and thus it condenses to a solid form. Normally, most of the condensed $^{99}Tc$ is captured by the SBS/WESP and is recycled back to pretreatment plant. Both the $^{137}Cs$ and $^{99}Tc$ are expected to be captured by the HEMEs and the HEPA filtration units during SBS/WESP maintenance bypass.

The overall total effective dose equivalent (TEDE) to the maximally exposed individual (MEI) resulting from the melter maintenance bypass will be lower than during normal operation.

It should be noted that the LAW vitrification processes will consist of two identical primary offgas systems. In the event that one of the two systems is undergoing maintenance, the LAW melter offgas from both melters will be treated through the active primary offgas system.

### 6.2.5.2 Secondary Offgas Treatment Bypass

Both the LAW and HLW vitrification offgas treatment systems will have a maintenance ventilation line that will bypass the caustic scrubber or the silver mordenite adsorption unit. The caustic scrubber will be

used primarily for $^{129}I$ gas control within the LAW vitrification plant and the silver mordenite adsorption unit will be used to control $^{129}I$ gas within the HLW vitrification plant.

Prior to initiating use of the maintenance ventilation line, waste feed will be halted and the melter placed into an idle condition. The caustic scrubber or the silver mordenite will remain online until the cold cap has burned off. The time required to reached this level will be between 30 minutes to one hour. No waste feed will be fed to the melter when the maintenance bypass line is in use.

For this bypass system, $^{129}I$ gas is the only gaseous radionuclide of concern. Based on current understanding of the melter offgas characteristics, the $^{129}I$ gas is expected to decrease rapidly (less than 10 minutes) after melter feed is terminated. Carbon-14 ($^{14}C$) and tritium ($^{3}H$) gases are not expected to be present in the melter offgas during idling. Particulate radionuclides will not be a concern during caustic scrubber or silver mordenite adsorption unit maintenance.

The overall TEDE to the MEI resulting from this maintenance bypass system will be lower than during normal operation.

### 6.2.6 HLW Pulse Ventilation System (Emission Unit HV-S4)

Gaseous emissions will be produced by the RFDs and PJMs that will be used to mix wastes within the HLW vitrification plant. The exhausts from the RFDs and PJMs throughout the HLW vitrification plant will be collected in the pulse ventilation system headers. This exhaust will potentially be contaminated with aerosols and particulates. Electric preheaters will eliminate liquid aerosols and reduce the relative humidity of the gas stream, as necessary, before it encounters the system HEPA filters. The gas will pass through HEPA filters to remove particulates that may be present. When the differential pressure drop across the filters becomes too high, they will be remotely changed out.

### 6.2.7 Immobilized HLW Glass Canister Storage (Emission Unit IHLW-S1)

The decontaminated IHLW canisters will be stored at the IHLW canister storage area, which will be located in the HLW vitrification plant.

The IHLW containers will be constructed of steel. The steel will be physically and chemically compatible with the glass waste. All of the IHLW canisters will be decontaminated and sealed through welding. A request for sealed source determination of the vitrified glass is provided in Appendix A of this submittal. Visual inspection will be conducted to ensure complete closure. Under normal operating conditions, the IHLW canisters are not expected to produce significant radioactive emissions from residual surface contamination. The BARCT analysis evaluated the environmental and economic impacts of controls to reduce the expected emissions. Based on unacceptable environmental and economic impacts, it is proposed to control the potential emissions through planned IHLW canister decontamination processes.

### 6.2.8 Proposed WTP Building Ventilation

The proposed controls for WTP building ventilation systems are described below. Figures 6-1 through 6-3 present the overall ventilation diagrams for the pretreatment, LAW vitrification, and HLW vitrification plants.

#### 6.2.8.1 Emission Units PT-C2, LV-C2, HV-C2, and HV-C2R

Emissions from WTP C2 areas are vented through emission units PT-C2, LV-C2, HV-C2, and HV-C2R. The C2 areas will consist of non-process operating areas, access corridors, and control or instrumentation and electrical rooms. Filtered air will be supplied to these areas by the C2 supply system and will be cascaded into adjacent C3 areas or HEPA filtered and exhausted by the C2 exhaust system. Figures 6-4 through 6-6 present the ventilation diagrams identifying the HEPA filter design arrays for emission units PT-C2, LV-C2, and HV-C2, and HV-C2R, respectively.

#### 6.2.8.2 Emission Units PT-S1, LV-S1, and HV-S1

The emissions from WTP C3 areas that are not cascaded to the C5 areas are vented through emission units PT-S1, LV-S1, and HV-S1. The C3 areas will consist of filter plant rooms, workshops, maintenance areas, and monitoring areas. Access from a C2 area to a C3 area will be via a C2/C3 subchange room. The C3 ventilation system is passed through a single-stage HEPA filtration system and vented to the atmosphere. Figures 6-7 through 6-9 present the ventilation diagrams identifying the HEPA filter design arrays for emission units PT-S1, LV-S1, and HV-S1, respectively.

#### 6.2.8.3 Emission Units PT-S2, LV-S2, and HV-S2

Emission units PT-S2, LV-S2, and HV-S2 are used to vent emissions from C5 exhaust ventilation systems serving the PT, LAW, and HLW plants respectively. The building areas and operations activities served by these C5 systems are described in section 5. Emission control devices for each of these systems are two stages of HEPA filtration. Figure 6-10 through Figure 6-12present the ventilation diagrams identifying the HEPA filter design arrays for emission units PT-S2, LV-S2, and HV-S2, respectively. Two design features are also provided to enhance reliability of the confinement feature provided by the C5 exhaust fans. First, a backup power source is available upon loss of normal site power. Second, C5 fan interlocks prevent operation of C3 and C2 exhaust fans upon loss of C5 fan service.

### 6.2.9 Proposed Analytical Laboratory Offgas System

The WTP analytical laboratory will provide support for WTP process control samples and select tank farm waste acceptance samples. Regulatory analysis for air, liquid, soil, and sludge samples and tank farm grab samples will be completed by a subcontract laboratory. Radionuclide particulate and aerosols are expected in the analytical laboratory exhaust systems due to the handling and analysis of various samples.

The WTP laboratory will be composed of analytical hot cell laboratory equipment system (AHL) and analytical radiological laboratory equipment system (ARL). Sample conveyance systems will automatically transport samples from the other process plants to the analytical laboratory. High-activity samples will be managed in a hot cell area that will contain hot cells dedicated to sample receipt, sample fusion, acid digestion, and dilution to support specific analytical techniques or functions in the analytical radiological laboratories. The hot cell exhaust will be handled as C5 ventilation system and the exhausts from C5 ventilation will be vented through emission unit LB-S2. This stream will be filtered through a two-stage HEPA filtration system (see Figure 6-13).

The analytical radiological laboratory will support analyses of low and medium radioactive samples. Each laboratory will have specific analytical equipment to perform the intended function. Fume hoods within these laboratories will be handled by the C3 ventilation system and vented through emission unit

LB-S1. This stream is processed through a one-stage HEPA filtration (see Figure 6-14). The building ventilation air associated with general laboratory work areas or offices will be vented through emission unit LB-C2. This stream is processed through a one-stage HEPA filtration system (see Figure 6-15).

### 6.2.10 Proposed Balance of Facility Offgas Controls

The BOF areas that handle radioactive material are:

- Central waste storage area
- LAW out-of-service melter storage area
- HLW out-of-service melter storage area

Central Waste Storage Area

The central waste storage area is designed to store routine secondary waste from process plants. The wastes will be packaged and containerized using commercially available boxes and drums. Vented containers will not be allowed at the central waste storage area. Under normal operating conditions, all waste boxes or drums will be totally enclosed and are not expected to have radioactive emissions. Building air exhaust treatment is not proposed for the central waste storage area.

LAW Out-of-Service Melter Storage Area

The LAW out-of-service melter will be stored at the LAW out-of-service storage area. The LAW melters are designed to include a roller or wheel assembly that will be used to move the melters in and out of the LAW vitrification building. Out-of-service melters will be disconnected from the offgas system, feed lines, electrical lines, and instrumentation. The LAW melter will be locally shielded within a steel enclosure. Prior to being moved out of the LAW vitrification building, the shielding container will be welded closed to provide a totally sealed container. Therefore, there will not be radioactive emissions from out-of-service melters or the storage area, and no additional emissions control will be required. A request for sealed source determination from WDOH is included in Appendix A of this submittal.

During export activities, the LAW melter will be moved to the LAW melter packaging airlock where the exterior surfaces of the LAW melter will be radiologically surveyed and necessary decontamination performed utilizing manual decontamination methods. In order to access the LAW melter enclosure bottom surface, a decontamination hatch will be located in the LAW melter packaging airlock floor that will allow operators to radiologically survey and decontaminate as necessary.

HLW Out-of-Service Melter Storage Area

The HLW out-of-service melter will be stored at the HLW out-of-service melter storage area. The melter will be containerized in a steel overpack. The overpack will provide a sealed, shielded disposal container for the out-of-service melter. The melter package will be totally enclosed and airtight. Therefore, there will not be radioactive emissions from out-of-service HLW melters or the storage area, and no additional emissions control will be required. A request for sealed source determination from WDOH is included in this submittal.

Prior to placement into the overpack, approximately over 91 % of the total IHLW will be removed. If needed, decontamination of the overpack will be done manually using moist cloths. Water spray will also

be provided as a contingency. After the outside surfaces of the overpack have been checked for radiological contamination and decontaminated as required, the out-of-service HLW melter and its overpack will be moved through the melter airlock and placed on the transporter to be moved out of the HLW vitrification plant through the rollup doors.

Prior to disposal, the melter will be stored in the melter storage building. If a melter fails to meet the disposal criteria, it will be stored until the HLW vitrification plant operating conditions are suitable for the melter to be returned to the HLW vitrification plant for breakdown.

**Table 6-1 Results of the Radionuclide Control Analyses**

| Facility | Emission Unit | Unabated Emission Sources | Proposed Controls and Decontamination Factors | | | |
|---|---|---|---|---|---|---|
| | | | Particulates and Aerosols | Particulate and Aerosol Overall DF | Radioactive Gas | Radioactive Gas Overall DF |
| Pretreatment | PT-S1 | C3 zone building air | HEPA[a] | 2.00E+03 | NA | NA |
| | PT-S2 | C5 zone building air | HEPA[b] | 2.00E+05 | NA | NA |
| | PT-S3 | Process vessel vent<br>LAW evaporator offgas<br>LAW melter evaporator offgas | HEPA[b]<br>caustic scrubber<br>HEME condenser | 2.65E+07 | NA | NA |
| | PT-S4 | RFD/PJM exhausts | HEPA[b]<br>demister | 1E+06 | NA | NA |
| | PT-C2 | C2 zone building air | HEPA[a] | 2.00E+03 | NA | NA |
| LAW Vitrification | ILAW-C2 | ILAW container storage | No controls | NA | NA | NA |
| | LV-S1 | C3 zone building air | HEPA[a] | 2.00E+03 | NA | NA |
| | LV-S2 | C5 zone building air | HEPA[b] | 2.00E+05 | NA | NA |
| | LV-S3 | LAW melter offgas/<br>Process vessel vent | HEPA[b]<br>SBS<br>WESP | 4.99E+07 | Caustic scrubber | 100 |
| | LV-C2 | C2 zone building air | HEPA[a] | 2.00E+03 | NA | NA |

**Table 6-1 Results of the Radionuclide Control Analyses**

| Facility | Emission Unit | Unabated Emission Sources | Proposed Controls and Decontamination Factors | | | |
|---|---|---|---|---|---|---|
| | | | Particulates and Aerosols | Particulate and Aerosol Overall DF | Radioactive Gas | Radioactive Gas Overall DF |
| HLW Vitrification | HV-S1 | C3 zone building air | HEPA[a] | 2.00E+03 | NA | NA |
| | IHV-S1 | IHLW canister storage | No controls | NA | NA | NA |
| | HV-S2 | C5 zone building air | HEPA[b] | 2.00E+05 | NA | NA |
| | HV-S3A and HV-S3B | HLW melter offgas/ Process vessel vent | HEPA[b]<br>SBS<br>HEME<br>WESP | 3.20E+09 | Silver mordenite adsorber | 1.00E+03 |
| | HV-S4 | RFD/PJM exhausts | HEPA[b] | 2.00E+05 | NA | NA |
| | HV-C2 and HV-C2R | C2 zone building air | HEPA[a] | 2.00E+03 | NA | NA |
| Analytical Laboratory | LB-S1 | C3 zone building air | HEPA[a] | 2.00E+03 | NA | NA |
| | LB-S2 | C5 zone building air | HEPA[b] | 2.00E+05 | NA | NA |
| | LB-C2 | C2 zone building air | HEPA[a] | 2.00E+03 | NA | NA |

a Single-stage HEPA filtration system

b Two-stage HEPA filtration system

Table 6-2 Annual Average Volumetric Offgas Flow Rates for Emissions Sources ($m^3/s$)

| Source | Pretreatment | LAW | HLW | Laboratory |
|---|---|---|---|---|
| C2 vent air | 18.9 | 19.9 | 42.5 | 2.6 |
| C3 vent air | 21.9 | 22.1 | 26.1 | 37.9 |
| C5 vent air | 30.7 | 22.6 | 25.0 | 9.4 |
| Vessel/evap exhaust | 1.1 | NA | NA | NA |
| RFD/PJM exhaust | 20.3 | NA | 1.9 | NA |
| Melter offgas | NA | 2.4 | 0.9 | NA |

NA – not applicable: does not apply to this emission source.

Figure 6-1 Ventilation Block Diagram Pretreatment Building Ventilation C2, C3, and C5 Area Ventilation

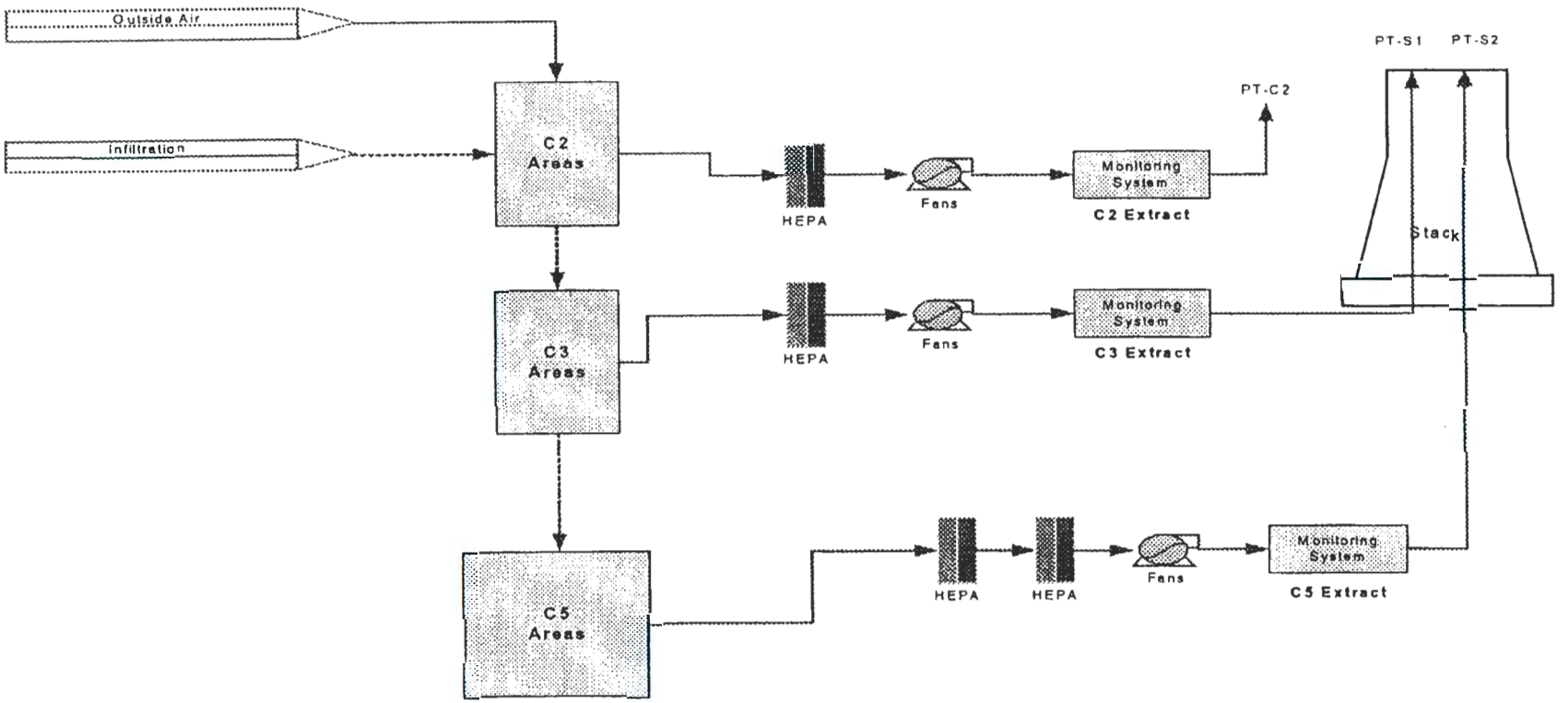




Best Available Copy



Best Available Copy

**Figure 6-2 Ventilation Block Diagram LAW Vitrification Building C2, C3, and C5 Area Ventilation**

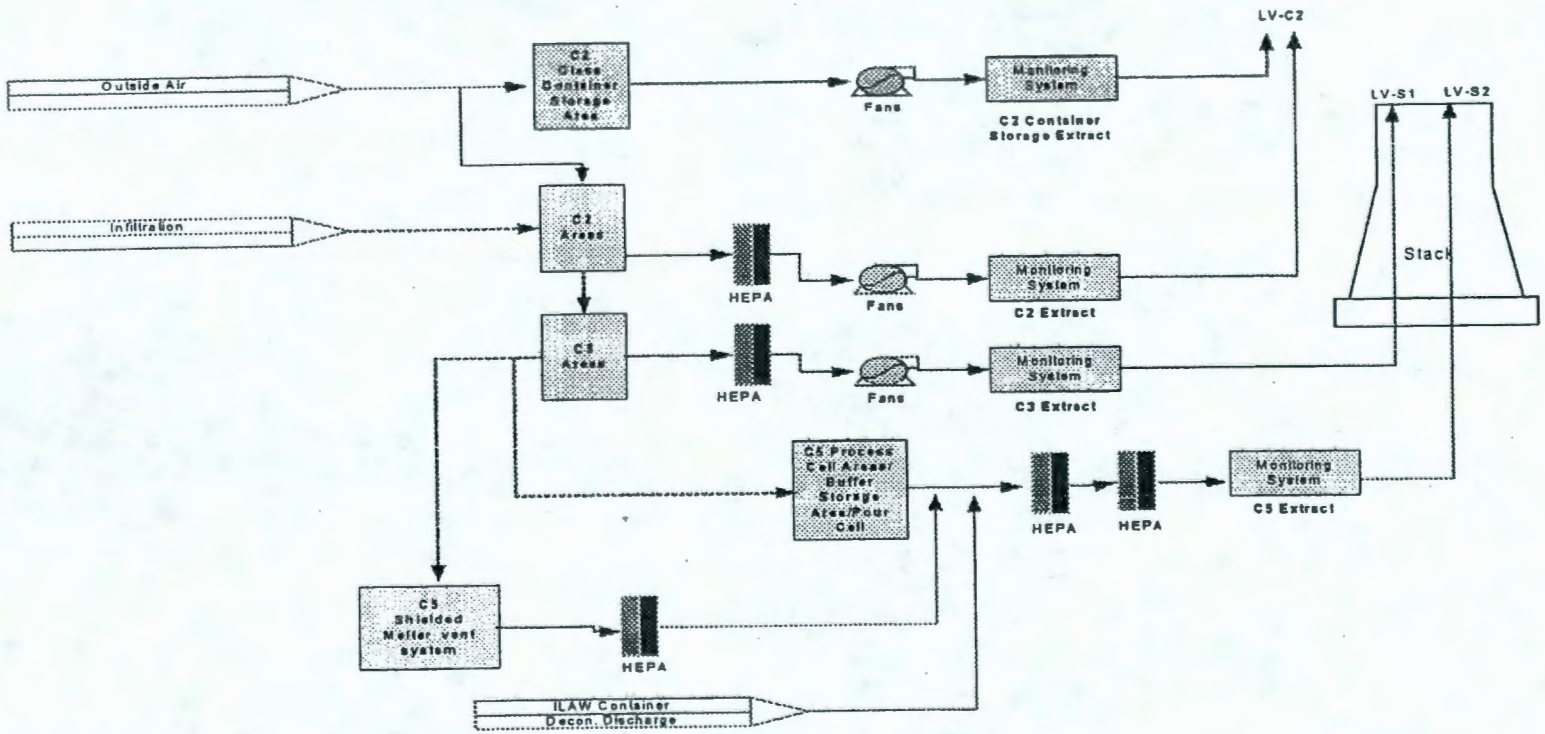


Best Available Copy



Best Available Copy

Figure 6-3 Ventilation Block Diagram HLW Vitrification Building C2, C3, and C5 Area Ventilation

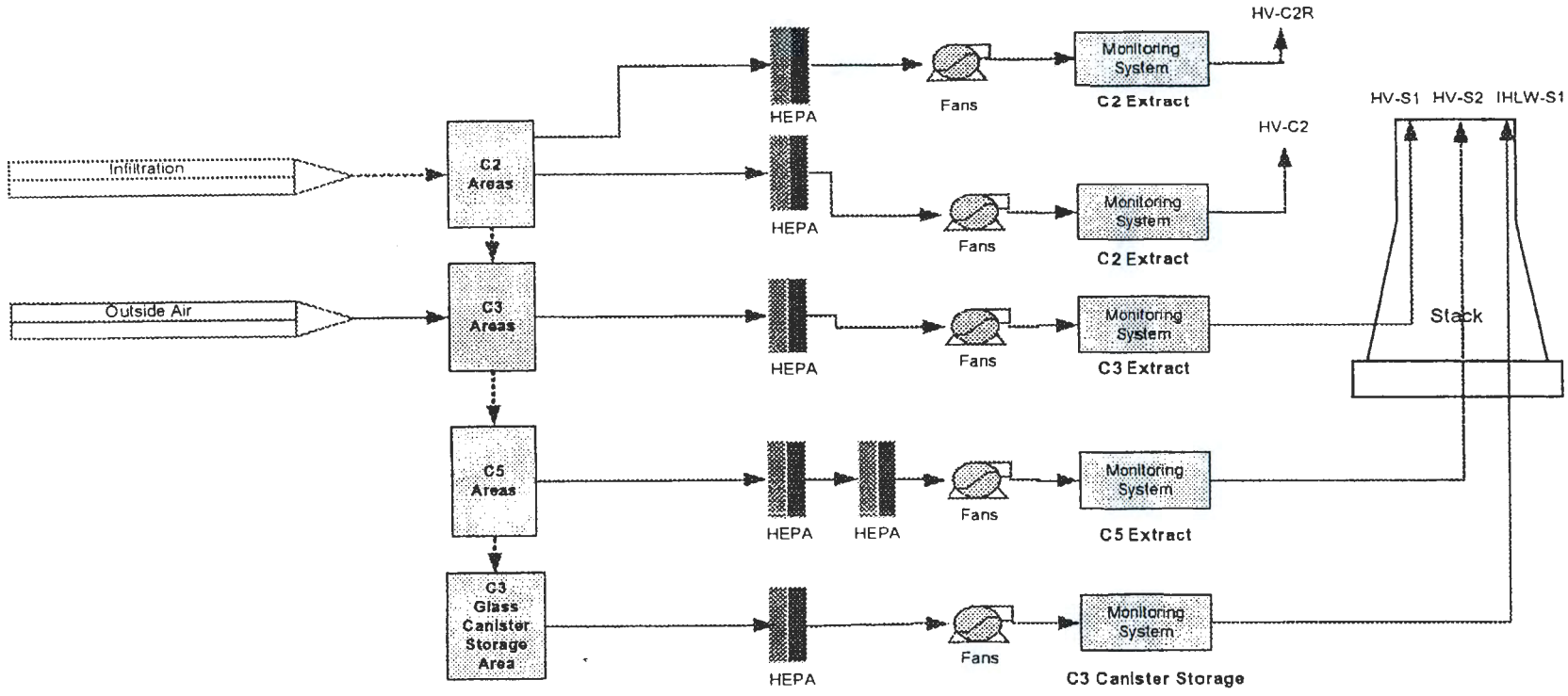


Best Available Copy



Best Available Copy

**Figure 6-4 HEPA Filter Design Arrays Details for Emission Unit PT-C2**

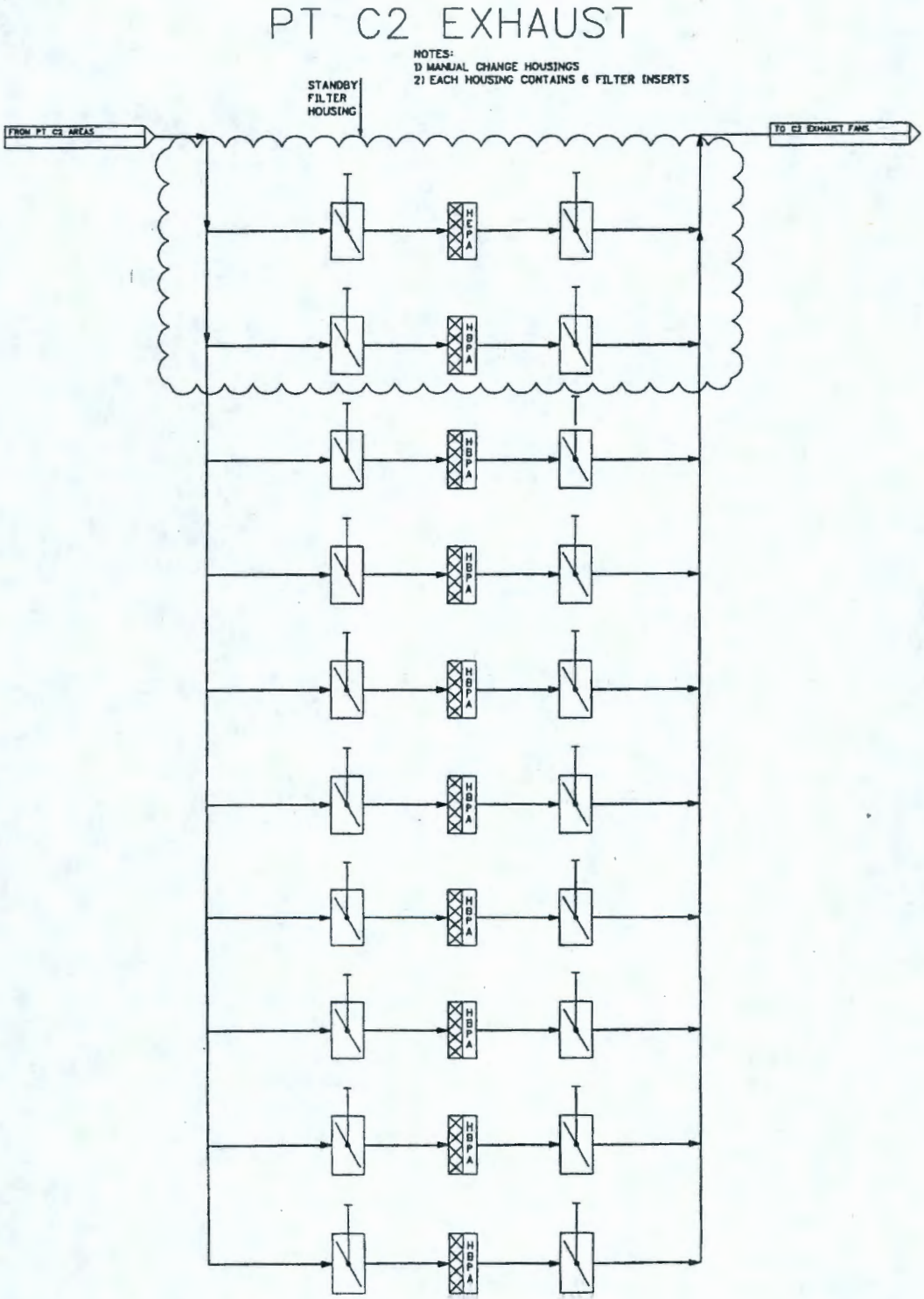

**Figure 6-5 HEPA Filter Design Arrays Details for Emission Unit LV-C2**

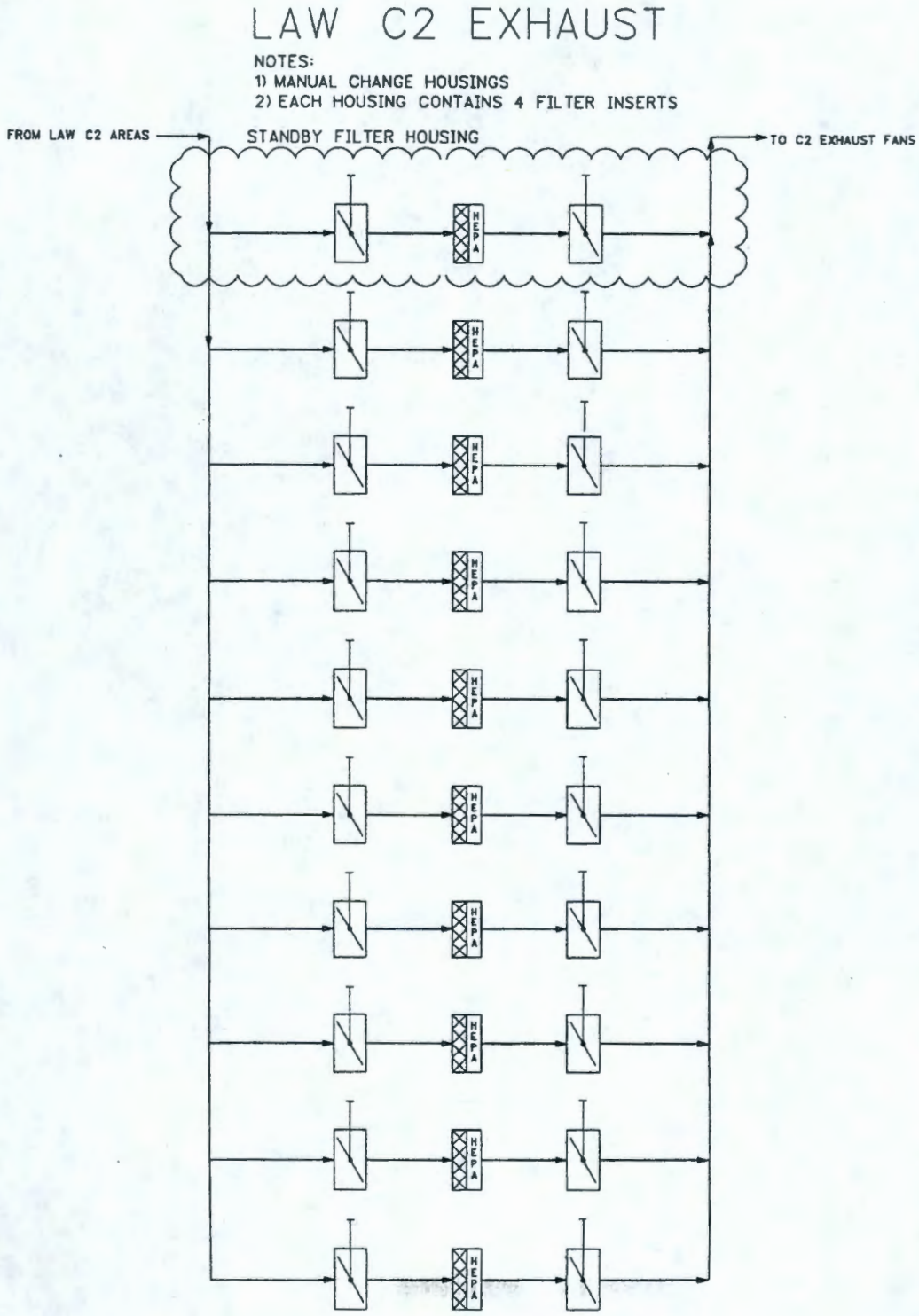

**Figure 6-6 HEPA Filter Design Arrays Details for Emission Units HV-C2 and HV-C2R**

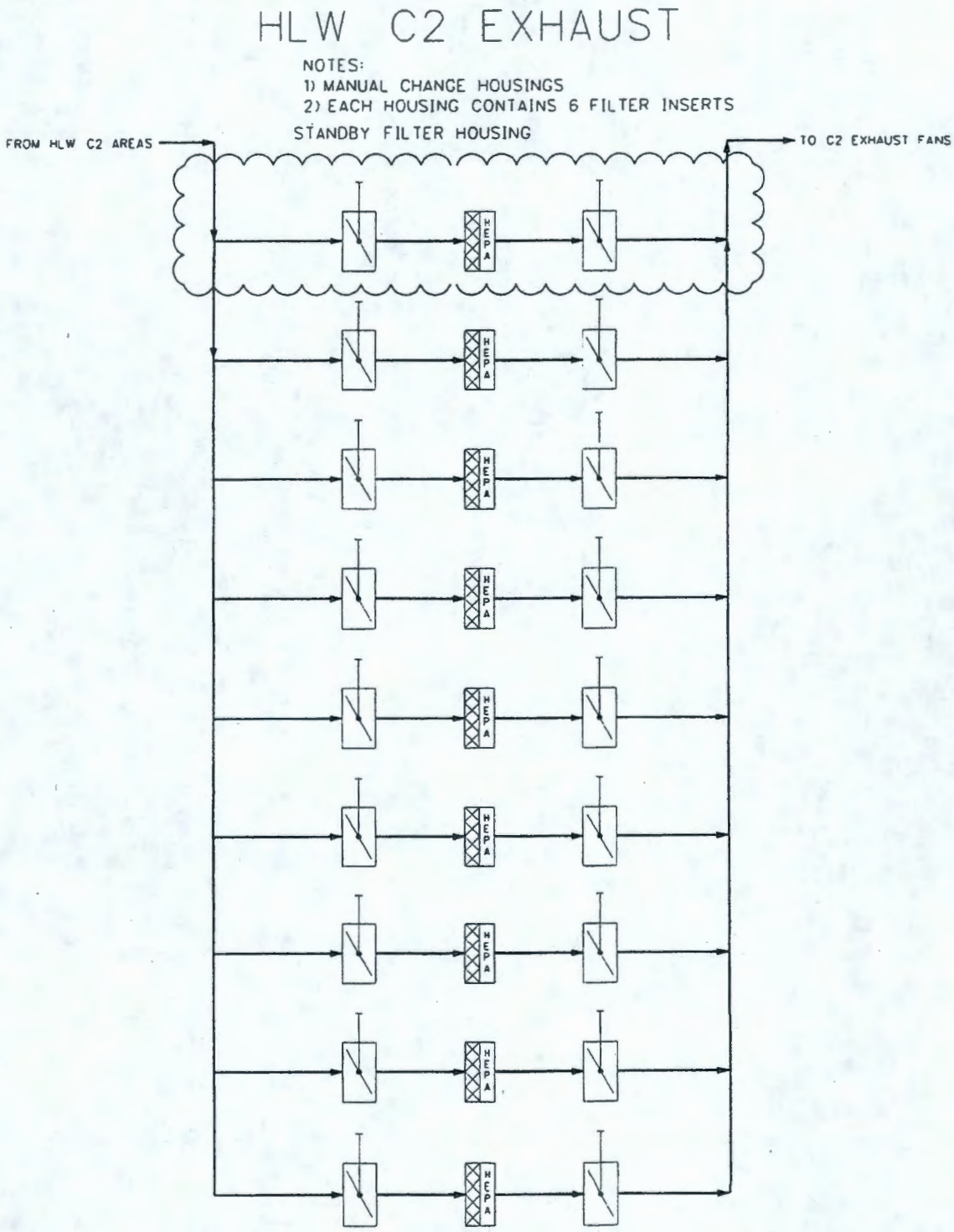

**Figure 6-7 HEPA Filter Design Arrays Details for Emission Unit PT-S1**

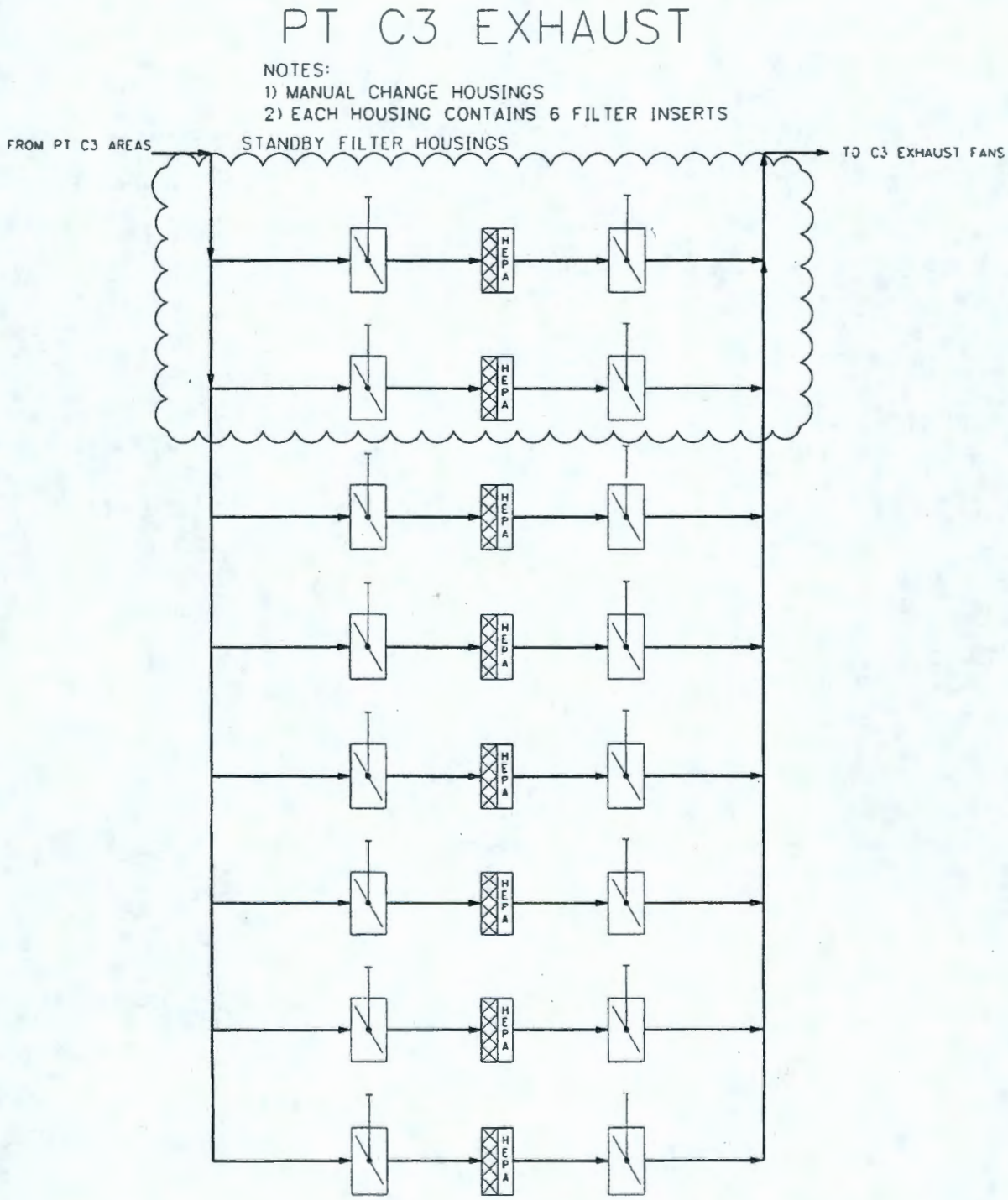

**Figure 6-8 HEPA Filter Design Arrays Details for Emission Unit LV-S1**

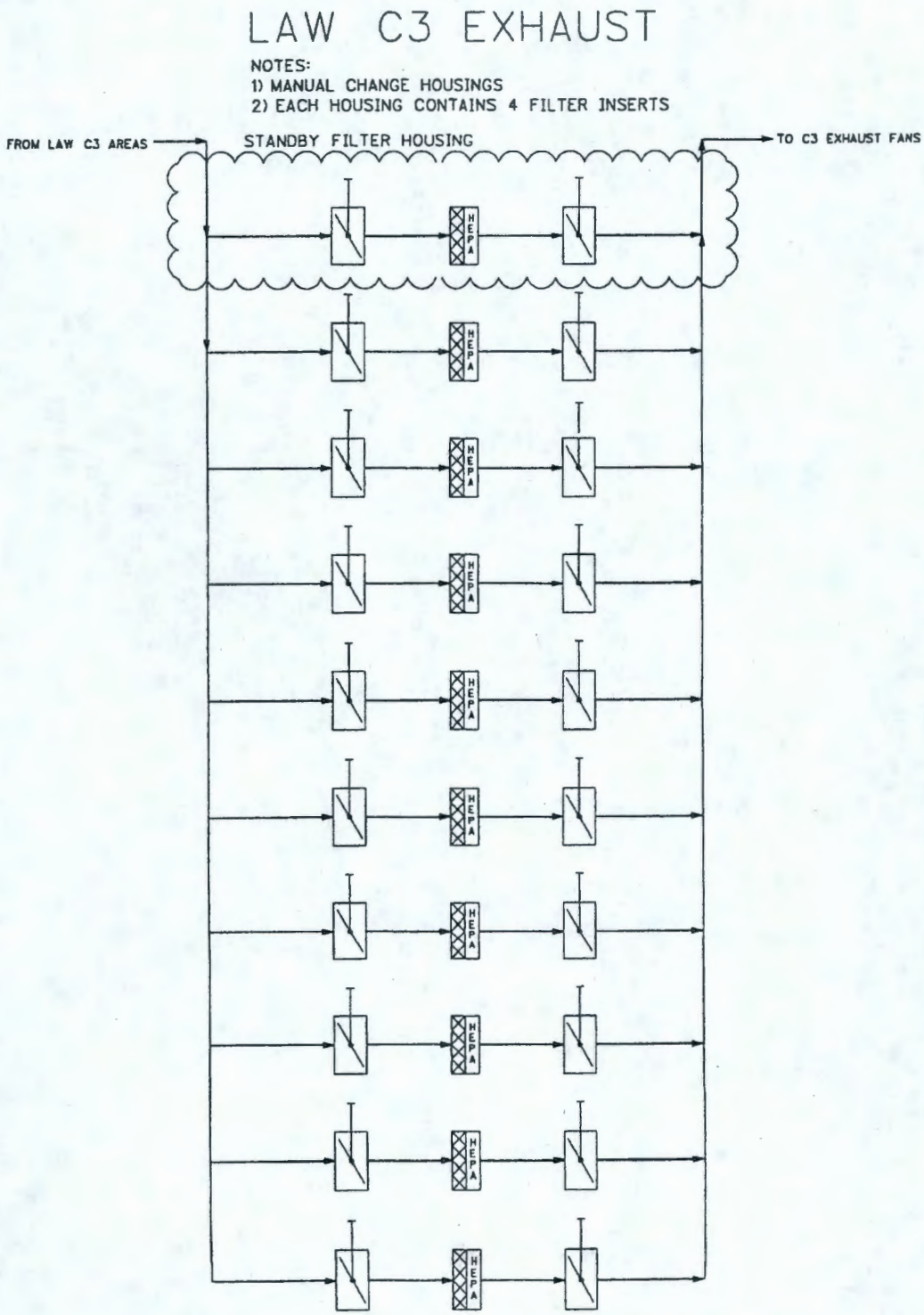

**Figure 6-9 HEPA Filter Design Arrays Details for Emission Unit HV-S1**

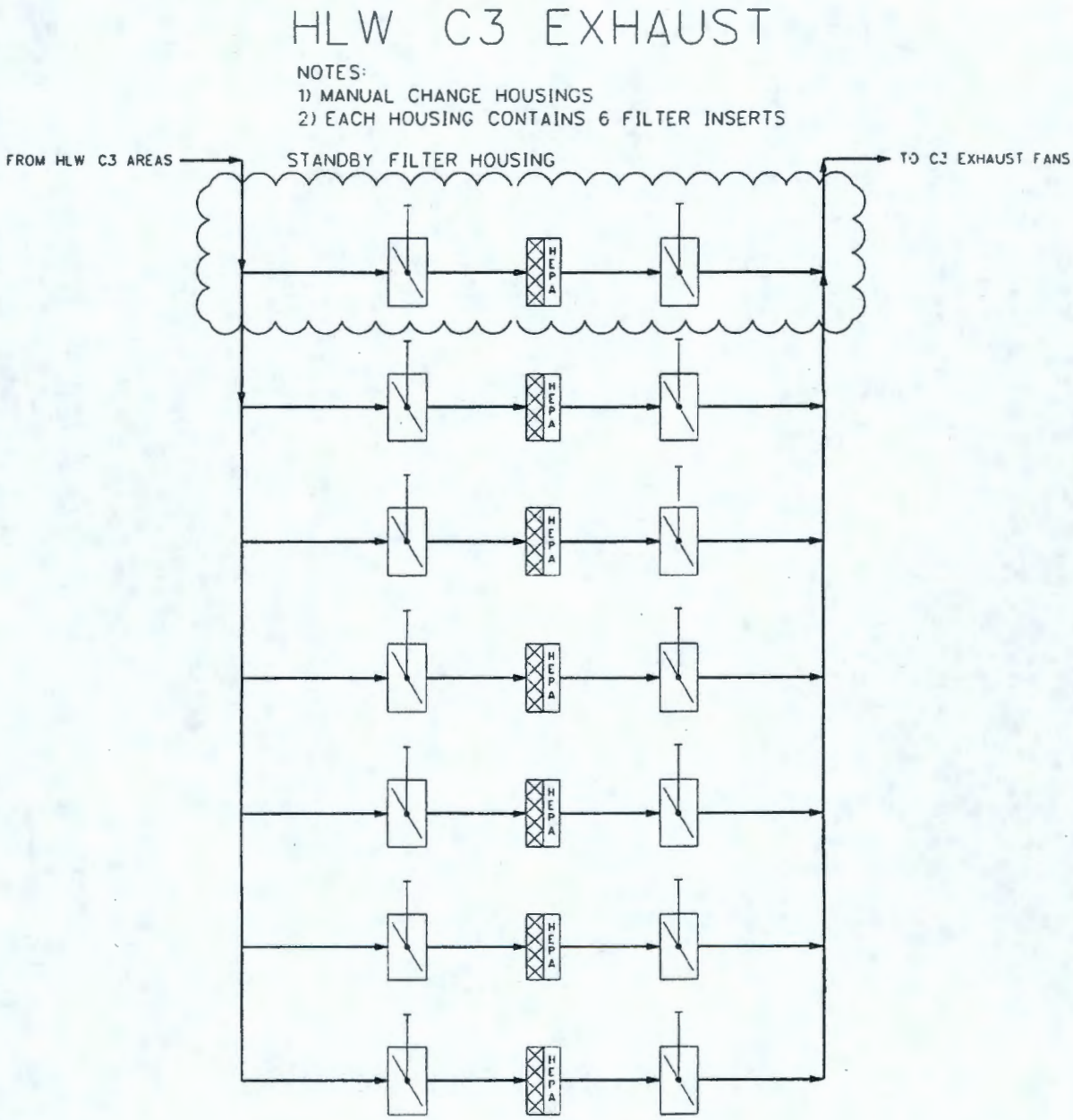

**Figure 6-10 HEPA Filter Design Arrays Details for Emission Unit PT-S2**

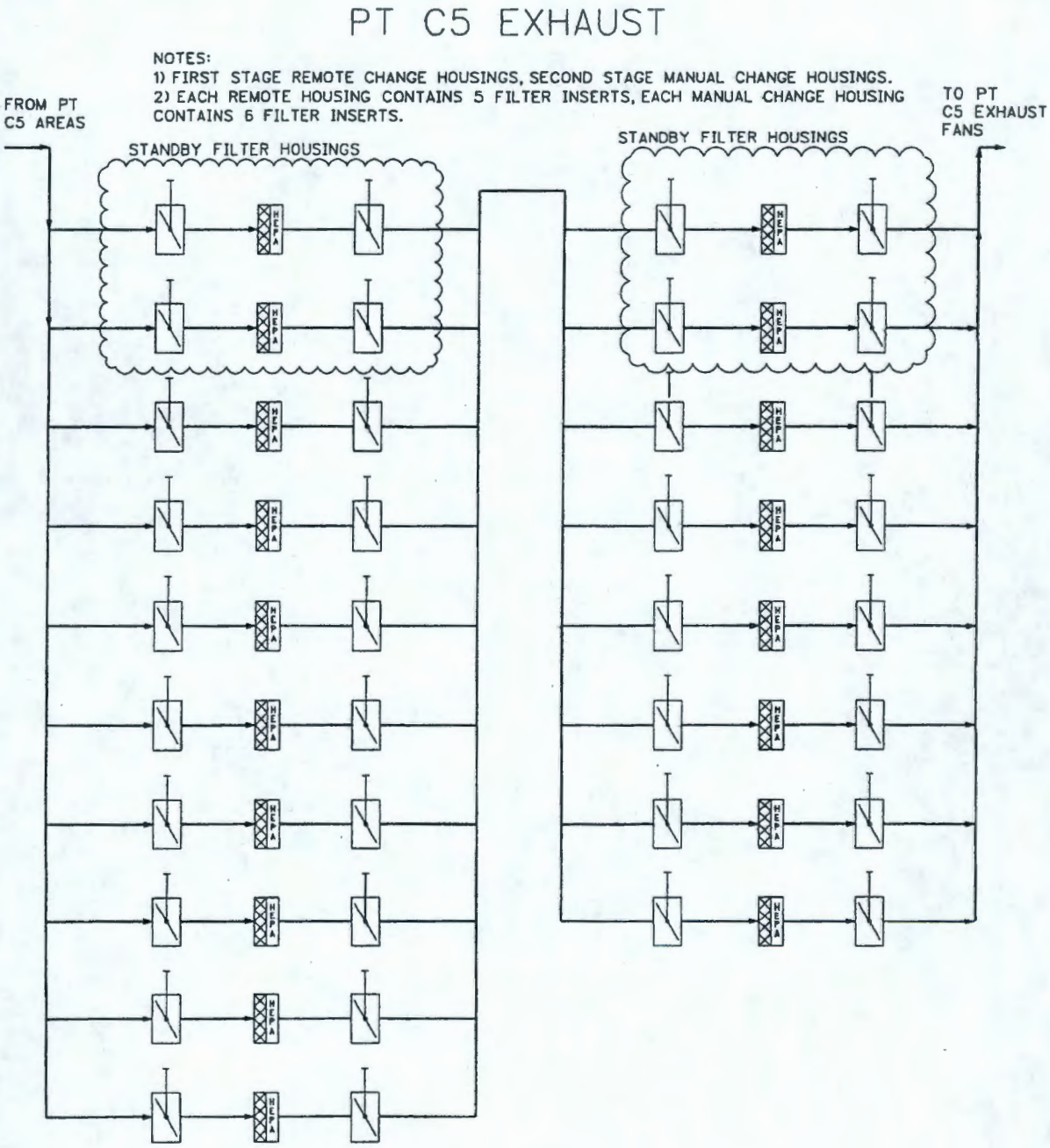

**Figure 6-11 HEPA Filter Design Arrays Details for Emission Unit LV-S2**

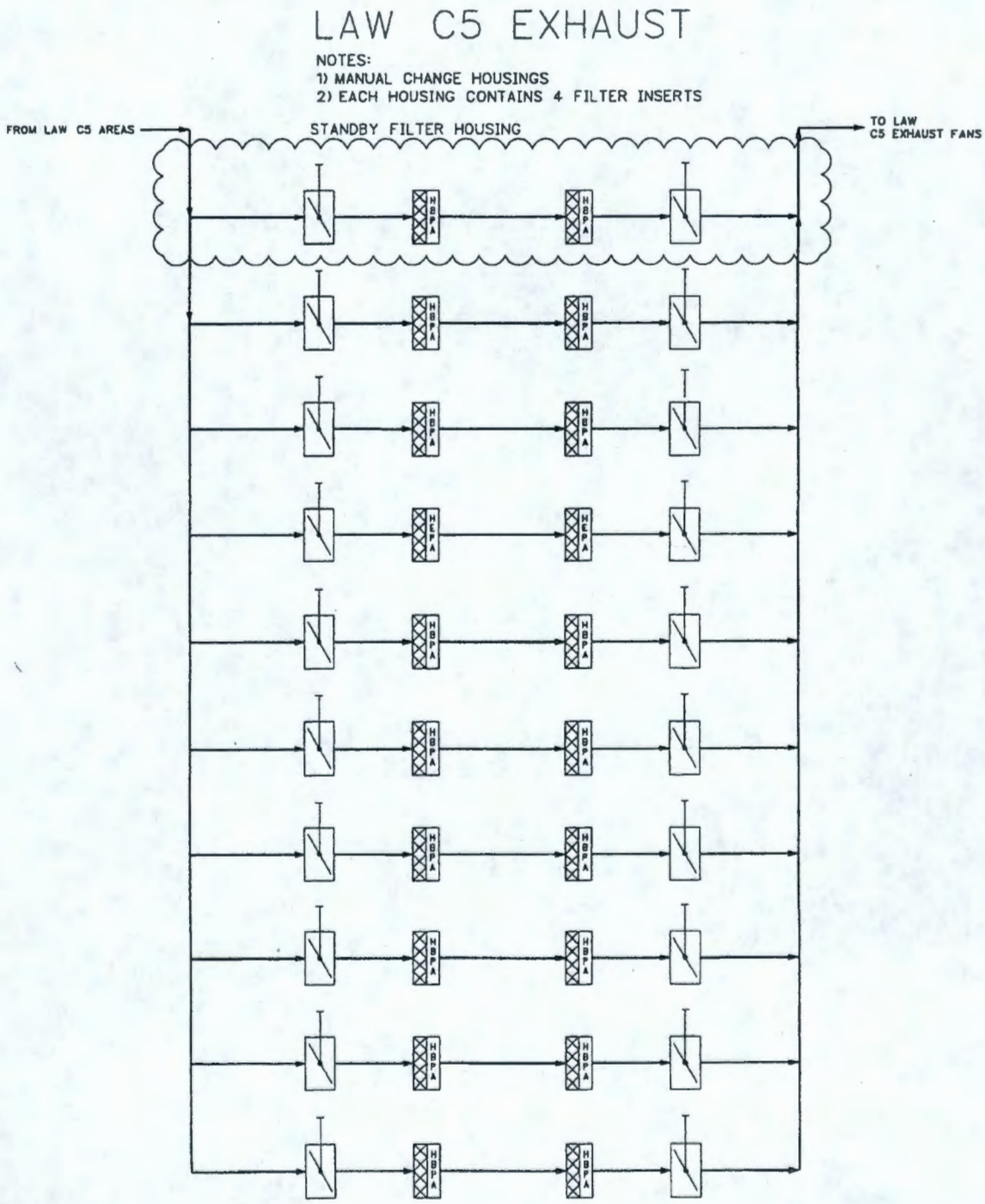

**Figure 6-12 HEPA Filter Design Arrays Details for Emission Unit HV-S2**

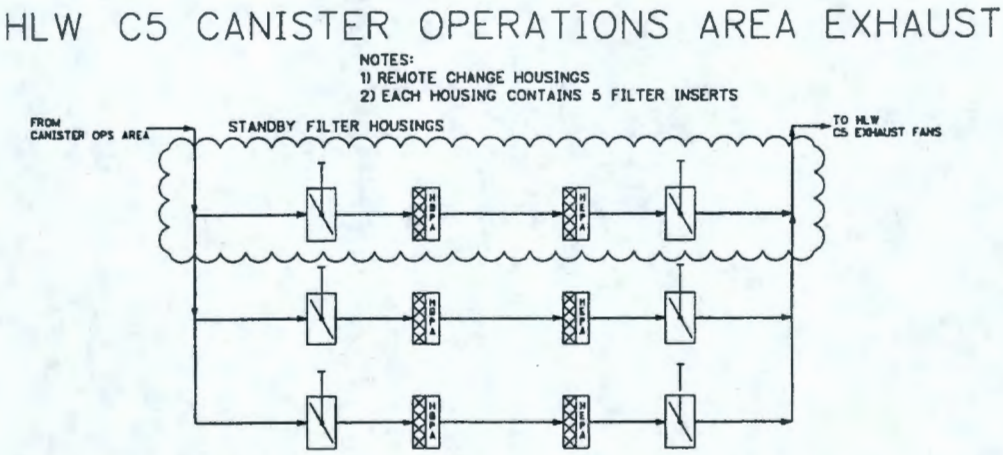


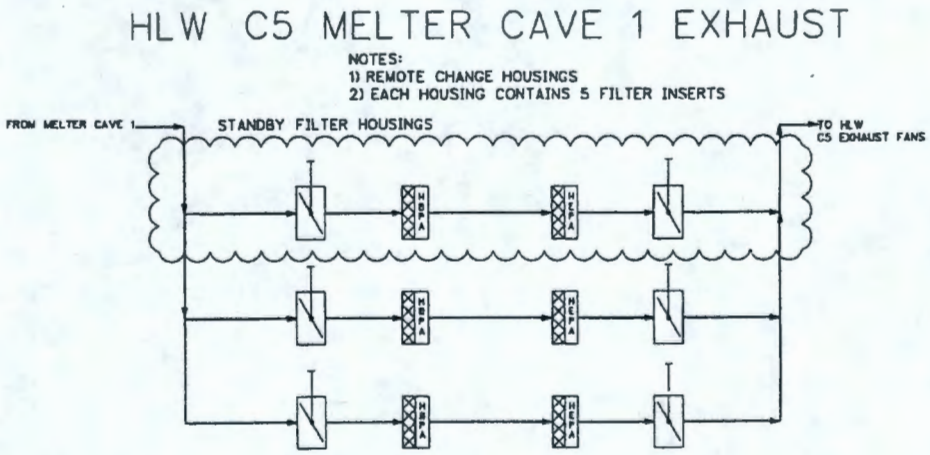


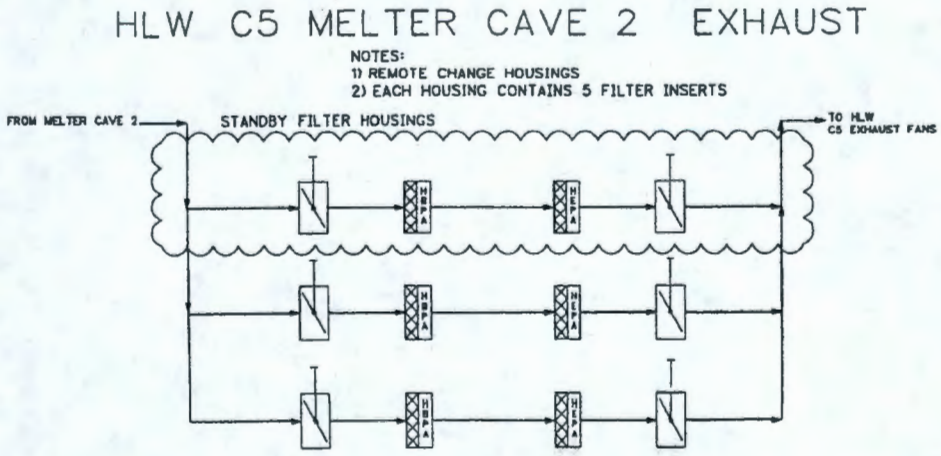

**Figure 6-13 HEPA Filter Design Arrays Details for Emission Unit LB-S2**

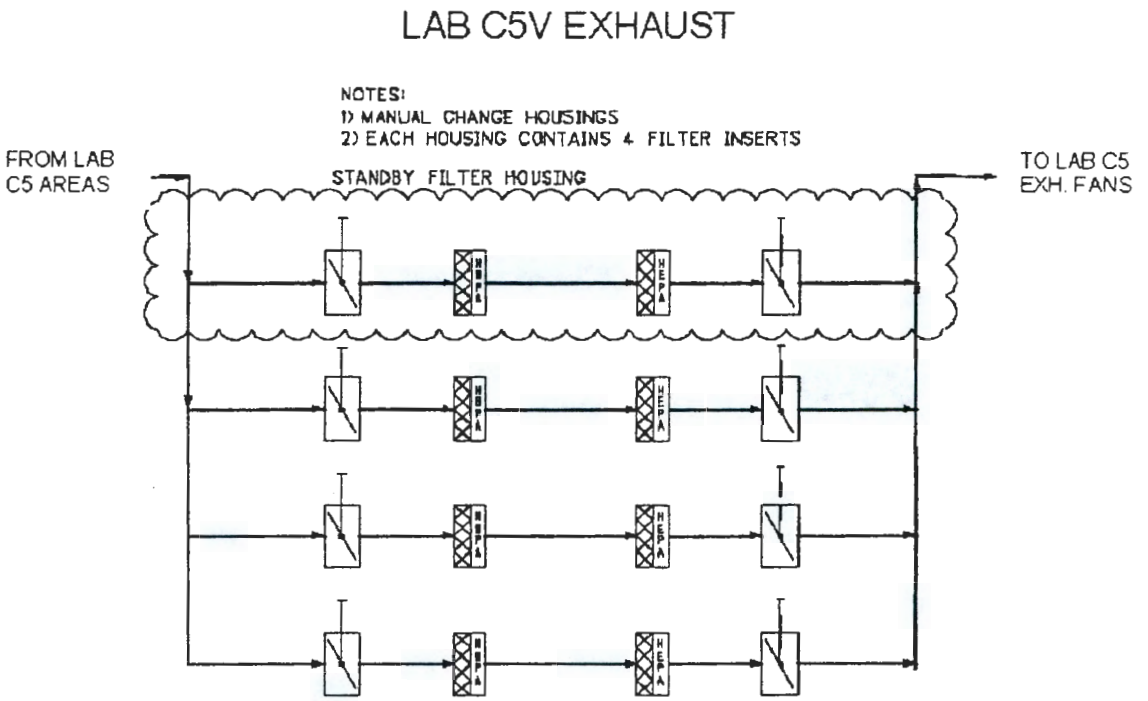

**Figure 6-14 HEPA Filter Design Arrays Details for Emission Unit LB-S1**

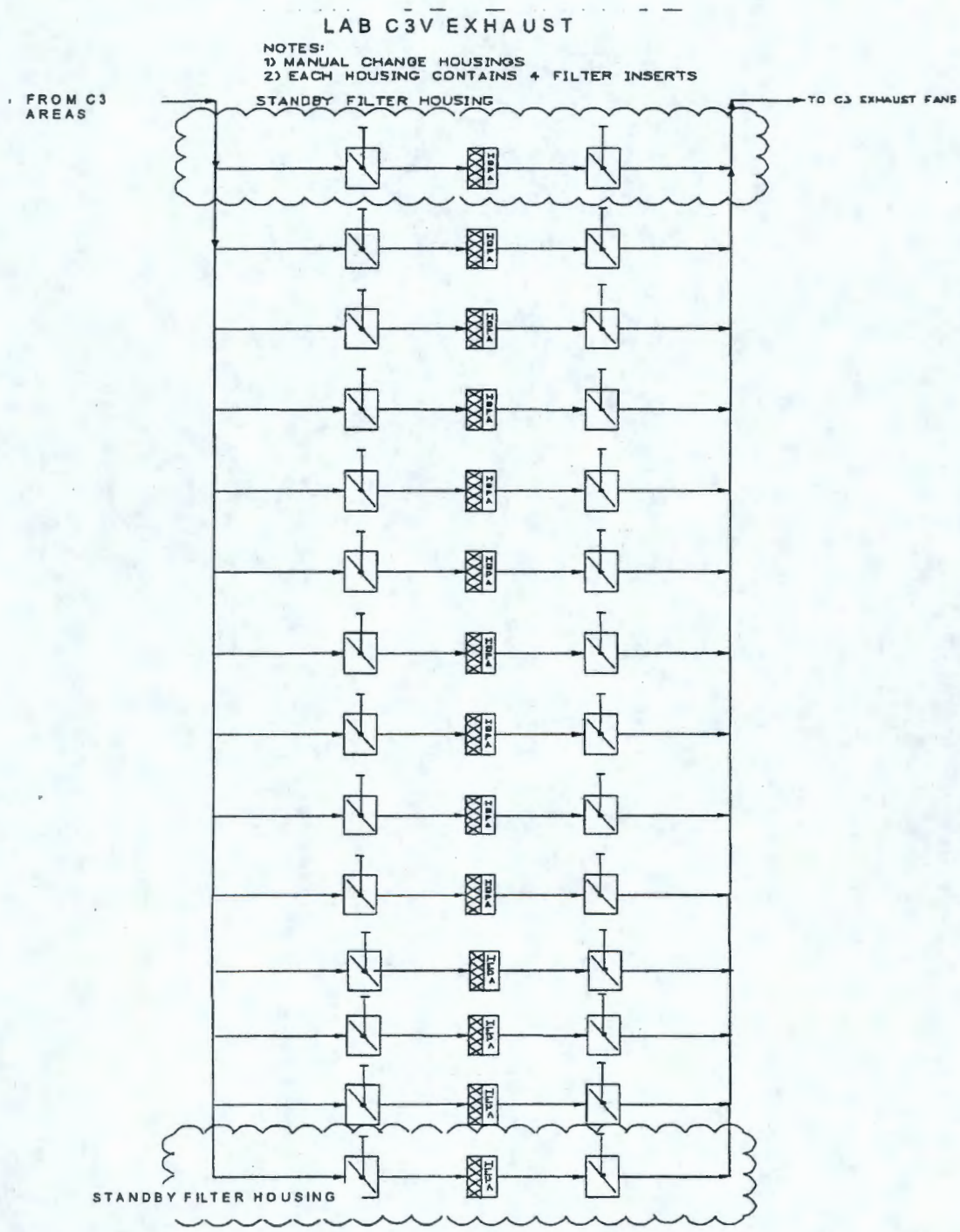

**Figure 6-15 HEPA Filter Design Arrays Details for Emission Unit LB-C2**

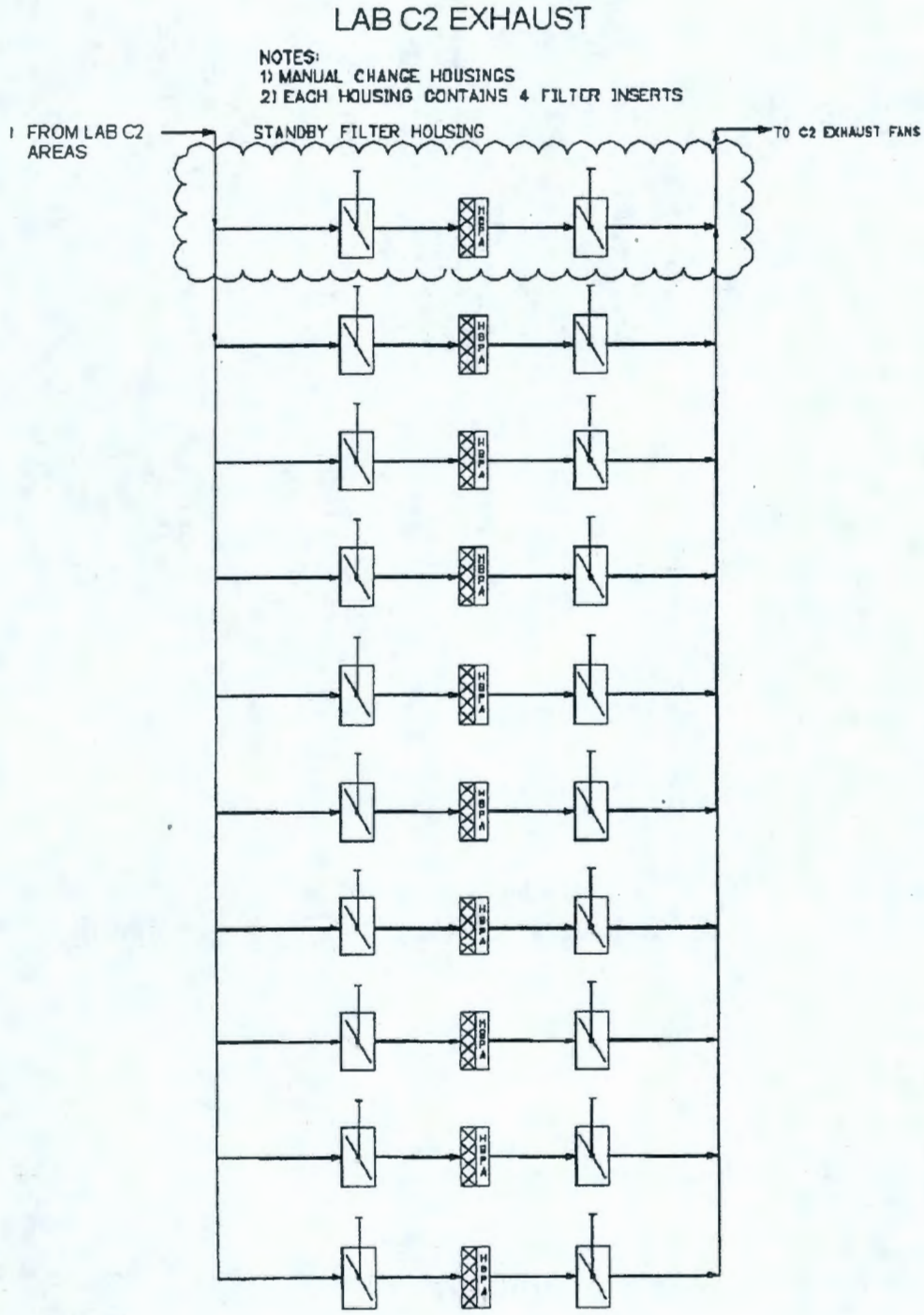

## Contents

7 Drawings of Controls ..... 7-1

# 7 Drawings of Controls

Please see simplified process flow diagrams provided in section 5 of this submittal.

## Contents

8 Radionuclides of Concern ..... 8-1

# 8 Radionuclides of Concern

Please see section 15 of this submittal.

## Contents

9 Monitoring ..... 9-1
9.1 System Overview ..... 9-1
9.2 Monitoring Methods and Equipment ..... 9-1
9.3 Compliance with ANSI N13.1 1999 ..... 9-2
9.3.1 Sample Probe Location and Design ..... 9-2
9.3.2 Sample Lines ..... 9-3
9.3.3 Flow Measurement Equipment ..... 9-3
9.3.4 Radiological Monitoring Equipment Layout and Enclosures ..... 9-3

## Tables

Table 9-1 WTP Emission Unit Sampling and Monitoring ..... 9-4

## Figures

Figure 9-1 Example Sampling System Layout for Pretreatment Emission Units - Side View ..... 9-5
Figure 9-2 Example Sampling System Layout for HLW Emission Units (Top View at 49 Ft Level) ..... 9-6
Figure 9-3 Example Sampling System Layout for LAW Emission Units (Top View at 48 Ft Level) ..... 9-7

# 9 Monitoring

## 9.1 System Overview

There are three main process plants (pretreatment, LAW vitrification, and HLW vitrification) and an analytical laboratory within the Hanford Tank Waste Treatment and Immobilization Plant (WTP). Each of these buildings will be provided with nuclear and radiological ventilation systems and monitoring equipment. The balance of facilities (BOF) areas will not have building monitoring systems.

## 9.2 Monitoring Methods and Equipment

The proposed WTP monitoring and sampling system fully complies with applicable sections of 40 CFR 61.93 requirements and American National Standards Institute (ANSI) N13.1, *Sampling and Monitoring Releases of Airborne Radioactive Substances from the Stacks and Ducts of Nuclear Facilities* (ANSI 1999) standards. The proposed monitoring and sampling parameters for each of the WTP emission units are presented in Table 9-1.

The WTP monitoring and sampling program is developed based on the ANSI N13.1 potential impact categories (PICs). Continuous air monitoring (CAM) for total $\alpha$ and total $\beta/\gamma$ and continuous sampling for particulate radionuclides will be performed on emission units with the potential effective dose equivalent (PEDE) to the maximally exposed individual (MEI) of greater than 5 millirem per year (mrem/yr).

Isotopic analysis of collected sample filters for those emission units will be conducted on individual radionuclides that have a potential to emit (PTE) of greater than 0.1 mrem/yr, contribute greater than 10 % of the potential effective dose equivalent for a release point, or contribute greater than 25 % of the effective dose equivalent to the MEI after controls. For example, isotopic analysis for $^{137}Cs$ will be performed on emission unit PT-S3 because the potential effective dose equivalent is greater than 10 %. Isotopic analysis for $^{14}C$ will be performed on emission unit LV-S3 because the effective dose equivalent to the MEI after controls for $^{14}C$ is greater than 25 %. Laboratory established analytical detection limits will be used for isotopic analyses.

For particulate radionuclides, monitoring will be performed by continuously drawing air through the record sampling system. Record samplers will have a filter paper to collect particulate samples. For sampling of $^{14}C$, a gaseous radionuclide, the sample air will be continuously drawn through a sampling system that consists of a series of glass vials containing a suitable collection media such as phenylethylamine or ethanolamine for collection of $CO_2$ gas. The vials will be taken to the analytical laboratory for quantification of $^{14}C$. The collected samples will be extracted and analyzed offline in an analytical laboratory in accordance with 40 CFR 61, Appendix B, Method 114.

Continuous sampling for particulate radionuclides will be performed on emission units with the TEDE to the MEI of greater than 0.1 millirem per year (mrem/yr). Isotopic analysis for those emission units will be conducted on individual radionuclides that have a PTE of greater than 0.1 mrem/yr, contribute greater than 10 % of the potential effective dose equivalent for a release point, or contribute greater than 25 % of the effective dose equivalent to the MEI after controls. Periodic confirmatory sampling for total $\alpha$ and total $\beta/\gamma$ particulate radionuclides will be performed on emission units with the TEDE to the MEI of less than 0.1 millirem per year (mrem/yr).

The sampling system will interface with the plant information network, which will maintain a long term (minimum of 5 years) archive for the emission unit discharge data and generate reports detailing the results of the flue discharge monitoring to support the reporting requirements of 40 CFR 61 and WAC 246-247.

## 9.3 Compliance with ANSI N13.1 1999

The emissions unit discharge sampling and monitoring system will consist of the following components, as applicable to their PIC category described in section 9.2:

- Sample probes and lines
- Stack flow measurement and control equipment
- Vacuum system
- Gross radiological particulate monitoring equipment
- Record sampling equipment
- Alarm
- Data recorders
- Sample flow measurement and control equipment

The sampling and monitoring arrangements shall comply with applicable sections of ANSI N13.1 standards (ANSI 1999).

### 9.3.1 Sample Probe Location and Design

The sample probes will be provided to collect a representative sample of the air in the duct and allow the sample to be routed to the instrumentation enclosures housing the sample collection instruments. The layout of the sample probe will follow Environmental Protection Agency (EPA) guidance in 40 CFR 60, Appendix A, Test Method 1, and comply with ANSI N13.1 (ANSI 1999) standards.

Table 4 within section 5 of ANSI N13.1 (ANSI 1999) details the acceptance criteria for a sampling location. Prior to any on-plant testing to confirm and document that the criteria have been satisfied, careful consideration will be given to the design of the ducting and the location of emission unit sampling systems. This will ensure the following:

- At each point, the flow will be stable, well-mixed, and representative of the effluent being discharged
- The flow will not exhibit excessive angularity or swirl
- Temperature range and variations in effluent flow rate will be understood
- Temperature range and variations in effluent flow rate will not present a problem for testing and maintenance activities

Pretreatment sampling ports will be located along the vertical ducting. LAW and HLW sampling ports will be located along the horizontal ducting. Examples of the proposed monitoring and sampling system layouts for pretreatment, HLW, and LAW emission units are illustrated in Figures 9-1 through 9-3. Testing in accordance with ANSI standards will be conducted to confirm that emission unit sampling

points will be located where there are no cyclonic or swirling air flow patterns. The design will minimize the lengths of sample lines and provide accessible locations for testing and routine maintenance activities. For samples taken from horizontal ducts, the main concern is the risk that particles will settle due to gravity and will stratify. However, the air velocities are expected to be quite high (up to 3500 feet per minute) in the sample ducts, which will eliminate potential particle settling. The sampling probe will be located where it can be demonstrated that the contaminants are well mixed and the flow is fully developed.

The aspiration and transmission ratios will be within the prescribed limits as recommended by section 6.3.1 of ANSI N13.1 (ANSI 1999). WTP plants to use ANSI N13.1 (ANSI 1999) compliant single shrouded probes.

### 9.3.2 Sample Lines

The sample lines will be provided to transport the air sample from the probe to the measurement instrument in the enclosure for monitoring or sampling. The lengths of the sample lines and number of bends will be minimized to reduce transmission losses. Wherever possible, the enclosures will be located in close proximity to the ventilation ducts. Sample line bends will have a curvature ratio (radius of curvature of the bend divided by the tube diameter) of at least 5.0.

Sample lines will be heat traced and insulated for instances where condensation of the sample may occur. The arrangement of sample probes, sample lines, and monitors will be modeled in accordance with section B2 of ANSI N13.1 (ANSI 1999) to confirm the transmission losses within the overall systems are within the acceptable limits (< 50 %) as defined in ANSI N13.1 (ANSI 1999).

### 9.3.3 Flow Measurement Equipment

Flow measurement instruments will be provided in accordance with ANSI N13.1 (ANSI 1999) standards. Continuous flow measurement instruments will be provided for emission units with the PEDE to the MEI of greater than 5 mrem/yr. Periodic confirmatory measurement of flows will be performed for the remaining emission units. The techniques selected will be of the low maintenance type and will be designed to facilitate calibration and testing. Flow measurements are designed to achieve an accuracy of at least 90 % (uncertainty of less than 10 %) in accordance with ANSI N13.1 (ANSI 1999). The accuracy achieved will be confirmed in detail design and by calibration or testing.

### 9.3.4 Radiological Monitoring Equipment Layout and Enclosures

The control and instrument panels are located as close as possible to the sample points to minimize the length of sample lines. Enclosures will be provided as necessary to house the radiometric instrumentation and associated equipment. Associated equipment will include isolation valves, flow adjustment, flow metering, and vacuum pumps, which will be used to pull air from the ducts through the radiometric instrumentation.

**Table 9-1 WTP Emission Unit Sampling and Monitoring**

| Facility | Emission Unit | CAM | Record Sampling and Isotopic Analysis[b] |
|---|---|---|---|
| Pretreatment | PT-C2 | NA | Periodic confirmatory measurement for gross α and β/γ. |
| | PT-S1 | NA | Periodic confirmatory measurement for gross α and β/γ. |
| | PT-S2[a] | CAM for gross α, β/γ | $^{90}Sr$, $^{137}Cs$, $^{241}Am$ |
| | PT-S3 | CAM for gross α, β/γ | $^{241}Am$, $^{243}Cm$, $^{244}Cm$, $^{137}Cs$*, $^{3}H$, $^{239}Pu$, $^{90}Sr$ |
| | PT-S4 | CAM for gross α, β/γ | $^{241}Am$, $^{60}Co$, $^{243}Cm$, $^{244}Cm$, $^{137}Cs$, $^{154}Eu$, $^{129}I$, $^{238}Pu$, $^{239}Pu$, $^{240}Pu$, $^{241}Pu$, $^{125}Sb$, $^{90}Sr$, $^{90}Y$, $^{231}Pa$, $^{227}Ac$ |
| LAW Vitrification | ILAW-C2 | NA | Periodic confirmatory measurement for gross α and β/γ. |
| | LV-C2 | NA | Periodic confirmatory measurement for gross α and β/γ. |
| | LV-S1 | NA | Periodic confirmatory measurement for gross α and β/γ. |
| | LV-S2[a] | NA | $^{241}Am$, $^{90}Sr$ |
| | LV-S3 | CAM for gross α, β/γ | $^{241}Am$, $^{14}C$, $^{60}Co$, $^{137}Cs$, $^{152}Eu$, $^{154}Eu$, $^{155}Eu$, $^{129}I$, $^{239}Pu$, $^{240}Pu$, $^{125}Sb$, $^{151}Sm$, $^{90}Sr$, $^{99}Tc$, $^{233}U$, $^{90}Y$, $^{106}Ru$*, $^{231}Pa$, $^{227}Ac$, $^{228}Ra$, $^{229}Th$, $^{93}Zr$, $^{93m}Nb$ |
| HLW Vitrification | IHLW-S1 | NA | Periodic confirmatory measurement for gross α and β/γ. |
| | HV-C2 | NA | Periodic confirmatory measurement for gross α and β/γ. |
| | HV-S1 | NA | Periodic confirmatory measurement for gross α and β/γ. |
| | HV-S2[a] | CAM for gross α, β/γ | $^{241}Am$, $^{90}Sr$ |
| | HV-S3A | CAM for gross α, β/γ | $^{241}Am$, $^{14}C$, $^{60}Co$, $^{243}Cm$, $^{244}Cm$, $^{137}Cs$*, $^{152}Eu$, $^{154}Eu$, $^{155}Eu$, $^{129}I$, $^{237}Np$, $^{238}Pu$, $^{239}Pu$, $^{240}Pu$, $^{241}Pu$, $^{125}Sb$, $^{151}Sm$, $^{90}Sr$, $^{99}Tc$, $^{90}Y$, $^{106}Ru$, $^{134}Cs$, $^{232}U$, $^{231}Pa$, $^{227}Ac$, $^{243}Am$, $^{242}Cm$, $^{229}Th$ |
| | HV-S3B | CAM for gross α, β/γ | $^{241}Am$, $^{14}C$, $^{60}Co$, $^{243}Cm$, $^{244}Cm$, $^{137}Cs$*, $^{152}Eu$, $^{154}Eu$, $^{155}Eu$, $^{129}I$, $^{237}Np$, $^{238}Pu$, $^{239}Pu$, $^{240}Pu$, $^{241}Pu$, $^{125}Sb$, $^{151}Sm$, $^{90}Sr$, $^{99}Tc$, $^{90}Y$, $^{106}Ru$, $^{134}Cs$, $^{232}U$, $^{231}Pa$, $^{227}Ac$, $^{243}Am$, $^{242}Cm$, $^{229}Th$ |
| | HV-S4 | NA | Periodic confirmatory measurement for gross α and β/γ. |
| Analytical Laboratory | LB-C2 | NA | Periodic confirmatory measurement for gross α and β/γ. |
| | LB-S1 | NA | Periodic confirmatory measurement for gross α and β/γ. |
| | LB-S2 | NA | $^{241}Am$, $^{90}Sr$ |

a Record sampling isotopic analysis for building ventilation air and laboratory air is determined as follows: $^{241}Am$ for α, $^{90}Sr$ for β, $^{137}Cs$ for γ emitters

b Record sampling isotopic analysis for constituents that are greater than 0.1 mrem/yr or 10 % of the potential to emit (PTE) TEDE to the MEI or greater than 25 % of the TEDE to MEI after controls

Figure 9-1 Example Sampling System Layout for Pretreatment Emission Units - Side View

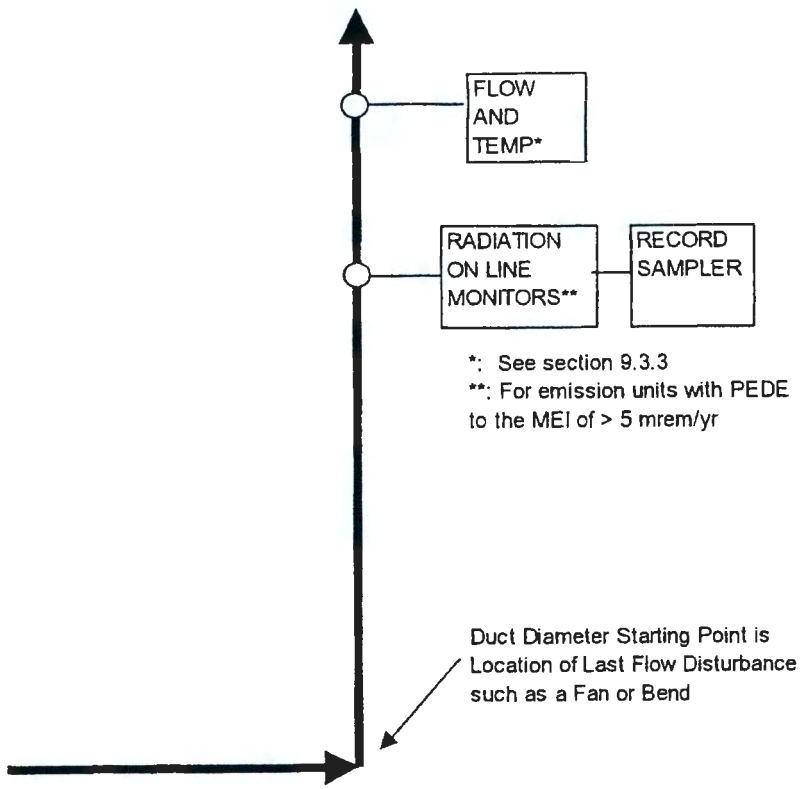

**Figure 9-2 Example Sampling System Layout for HLW Emission Units (Top View at 49 Ft Level)**

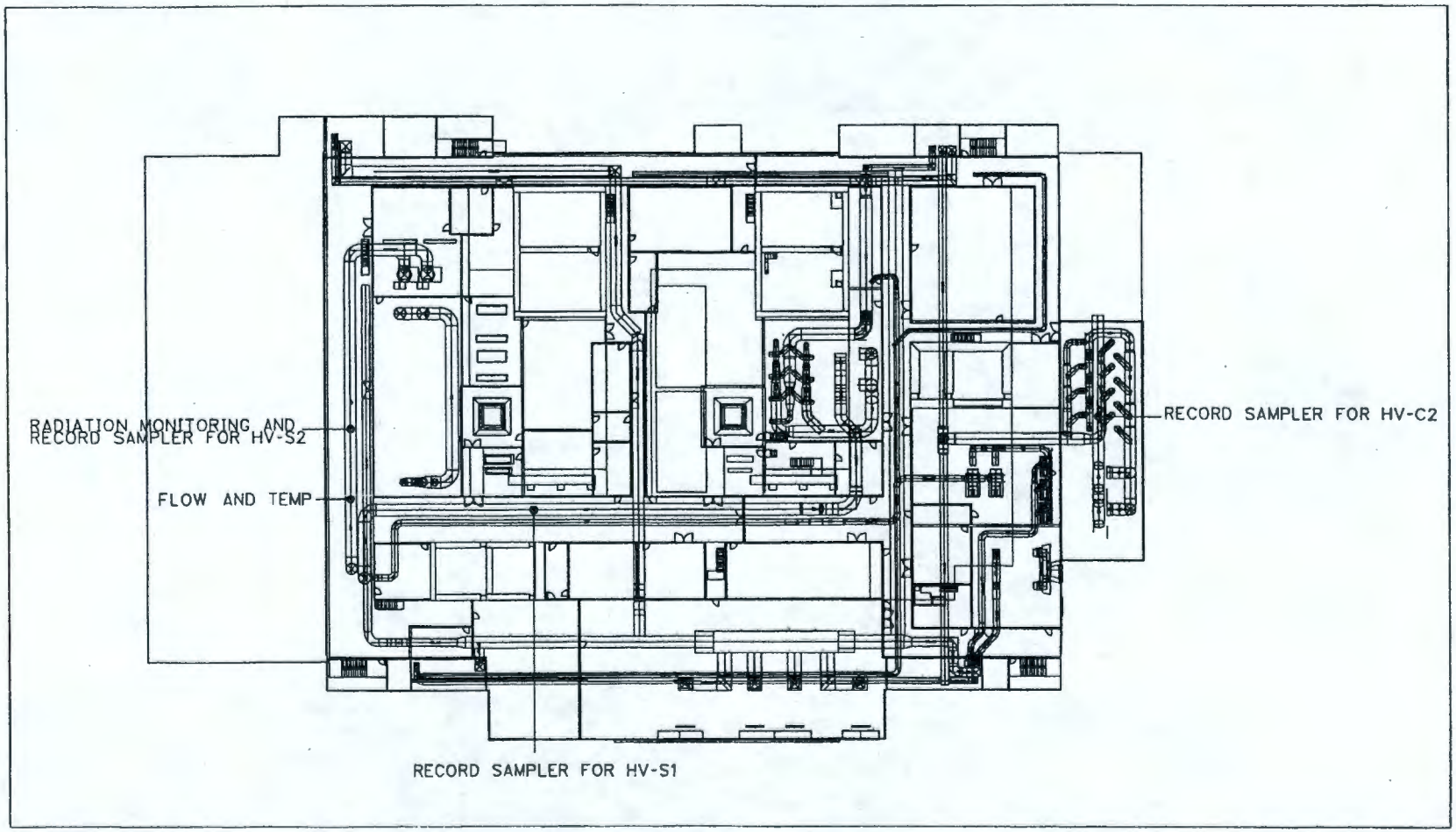


Best Available Copy

Figure 9-3 Example Sampling System Layout for LAW Emission Units (Top View at 48 Ft Level)

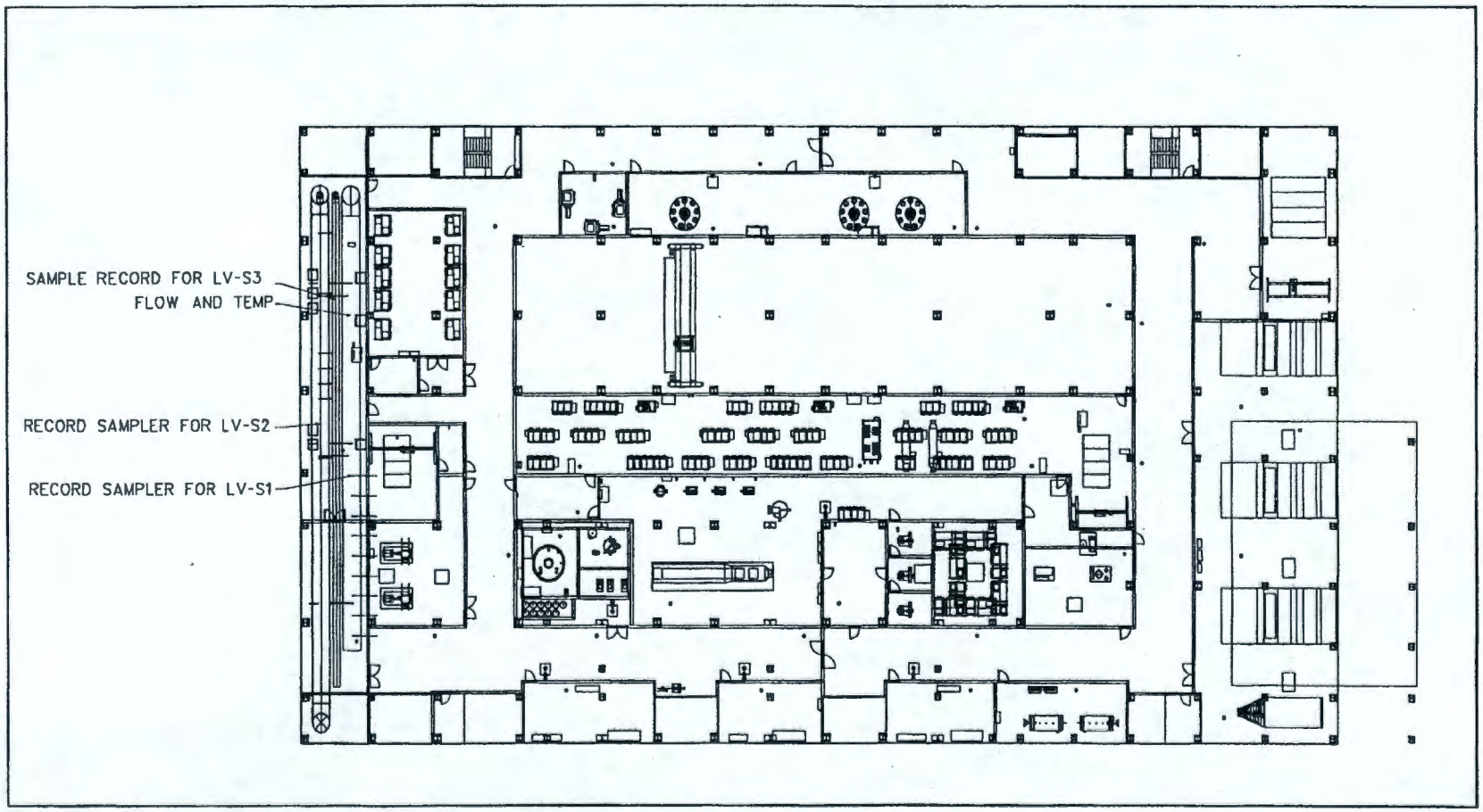

## Contents

10 Annual Possession Quantity ..... 10-1

## Tables

Table 10-1 Annual Possession Quantities for Radionuclides for Pretreatment, LAW Vitrification, and HLW Vitrification Processes ..... 10-2

Table 10-2 Annual Possession Quantities for Radionuclides in the Pretreatment Building Ventilation System ..... 10-5

Table 10-3 Annual Possession Quantities for Radionuclides in the LAW Vitrification Building Ventilation System ..... 10-6

Table 10-4 Annual Possession Quantities for Radionuclides in the HLW Vitrification Building Ventilation System ..... 10-7

Table 10-5 Annual Possession Quantities for Radionuclides in the Analytical Laboratory ..... 10-8

# 10 Annual Possession Quantity

The Hanford Tank Waste Treatment and Immobilization Plant (WTP) will have 21 emission units as described in section 5 of this submittal. The annual possession quantity (APQ) has been determined for each emission unit and these values are presented in Table 10-1 through Table 10-5. The APQ values for pretreatment, LAW vitrification, and HLW vitrification process emission units are based on feed concentrations in the *Emission Maximum Case Runs with Updated Parameters* (24590-WTP-MRQ-PT-03-002, Rev 0). The APQ values for process building ventilation areas and laboratory ventilation areas were derived from calculations utilizing bounding radionuclide estimates. The anticipated activities that may contribute to APQ in building and laboratory ventilation areas are described in section 5 of this submittal. The ILAW and IHLW glass canisters may potentially have residual radioactive surface contamination. The following is a summary of the approach used to determine the APQ values provided in this section:

- The APQs for emission units PT-S3, PT-S4, LV-S3, HV-S3A, HV-S3B, and HV-S4 were calculated based on the anticipated waste concentrations to be processed through pretreatment, LAW vitrification, and HLW vitrification processes. The assumed throughput rates to LAW and HLW vitrification processes are 50 metric tons per day and 6 metric tons per day, respectively.
- The APQs for emission units PT-C2, PT-S1, LV-C2, LV-S1, HV-C2, HV-C2R, and HV-S1 represent the APQs for the WTP C2 and C3 zone building ventilation systems. The APQs were calculated based on the anticipated smearable surface contamination for each ventilation area.
- The APQs for emission units PT-S2, LV-S2, and HV-S2 represent the APQs for the C5 zone building ventilation system. The APQs for LV-S2 and HV-S2 were calculated based on vitrified glass volume and estimated glass concentrations. The APQs for PT-S2 were based on anticipated releases during waste transfer operations in pretreatment C5 areas.
- The APQs for the emission units ILAW-C2 and IHLW-S1 were calculated based on the anticipated annual throughput and the potential residual surface contamination on the decontaminated containers.
- The APQs for the analytical laboratory (emission units LB-C2, LB-S1, and LB-S2) were calculated based on the anticipated laboratory sample concentrations and volumes.

**Table 10-1 Annual Possession Quantities for Radionuclides for Pretreatment, LAW Vitrification, and HLW Vitrification Processes**

| CAS Number | Radionuclide | APQ (Ci/yr) | | | | | |
|---|---|---|---|---|---|---|---|
| | | Emission Unit PT-S3 | Emission Unit PT-S4 | Emission Unit LV-S3 | Emission Unit HV-S3A | Emission Unit HV-S3B | Emission Unit HV-S4 |
| 14596-10-2 | Americium-241 | 3.53E+05 | 3.53E+05 | 4.76E+02 | 3.54E+05 | 3.54E+05 | 3.54E+05 |
| 14762-75-5 | Carbon-14 | 3.94E+02 | 3.94E+02 | 3.34E+02 | 5.89E+01 | 5.89E+01 | 5.89E+01 |
| 10198-40-0 | Cobalt-60 | 3.97E+04 | 3.97E+04 | 4.74E+02 | 3.94E+04 | 3.94E+04 | 3.94E+04 |
| 15757-87-6 | Curium-243 | 1.17E+04 | 1.17E+04 | 1.27E+00 | 1.18E+04 | 1.18E+04 | 1.18E+04 |
| 13981-15-2 | Curium-244 | 8.81E+03 | 8.81E+03 | 1.36E+00 | 8.84E+03 | 8.84E+03 | 8.84E+03 |
| 10045-97-3 | Cesium-137 | 3.38E+07 | 3.38E+07 | 5.07E+03 | 3.49E+07 | 3.49E+07 | 3.49E+07 |
| 14683-23-9 | Europium-152 | 3.70E+03 | 3.70E+03 | 1.66E+03 | 2.05E+03 | 2.05E+03 | 2.05E+03 |
| 15585-10-1 | Europium-154 | 2.10E+05 | 2.10E+05 | 5.49E+03 | 2.05E+05 | 2.05E+05 | 2.05E+05 |
| 14391-16-3 | Europium-155 | 1.24E+05 | 1.24E+05 | 9.46E+03 | 1.15E+05 | 1.15E+05 | 1.15E+05 |
| 10028-17-8 | Tritium | 5.19E+03 | 5.19E+03 | 1.64E+02 | 1.81E+03 | 1.81E+03 | 1.81E+03 |
| 15046-84-1 | Iodine-129 | 5.16E+00 | 5.16E+00 | 4.27E+00 | 1.77E+00 | 1.77E+00 | 1.77E+00 |
| 13981-37-8 | Nickel-63 | 2.18E+04 | 2.18E+04 | 3.04E+03 | 1.90E+04 | 1.90E+04 | 1.90E+04 |
| 13994-20-2 | Neptunium-237 | 2.91E+02 | 2.91E+02 | 1.02E+00 | 2.91E+02 | 2.91E+02 | 2.91E+02 |
| 13981-16-3 | Plutonium-238 | 1.37E+03 | 1.37E+03 | 2.76E+00 | 1.38E+03 | 1.38E+03 | 1.38E+03 |
| 15117-48-3 | Plutonium-239 | 1.22E+04 | 1.22E+04 | 3.22E+01 | 1.22E+04 | 1.22E+04 | 1.22E+04 |
| 14119-33-6 | Plutonium-240 | 6.71E+02 | 6.71E+02 | 5.55E+00 | 6.69E+02 | 6.69E+02 | 6.69E+02 |
| 14119-32-5 | Plutonium-241 | 8.63E+04 | 8.63E+04 | 1.37E+02 | 8.66E+04 | 8.66E+04 | 8.66E+04 |
| 14234-35-6 | Antimony-125 | 1.53E+05 | 1.53E+05 | 2.54E+04 | 1.29E+05 | 1.29E+05 | 1.29E+05 |
| 15715-94-3 | Samarium-151 | 7.36E+05 | 7.36E+05 | 3.14E+05 | 4.25E+05 | 4.25E+05 | 4.25E+05 |
| 15832-50-5 | Tin-126 | 7.96E+02 | 7.96E+02 | 1.90E+02 | 6.09E+02 | 6.09E+02 | 6.09E+02 |
| 10098-97-2 | Strontium-90 | 4.03E+07 | 4.03E+07 | 1.03E+06 | 3.96E+07 | 3.96E+07 | 3.96E+07 |
| 14133-76-7 | Technetium-99 | 6.86E+04 | 6.86E+04 | 4.10E+02 | 1.02E+05 | 1.02E+05 | 1.02E+05 |

**Table 10-1 Annual Possession Quantities for Radionuclides for Pretreatment, LAW Vitrification, and HLW Vitrification Processes**

| CAS Number | Radionuclide | APQ (Ci/yr) | | | | | |
|---|---|---|---|---|---|---|---|
| | | Emission Unit PT-S3 | Emission Unit PT-S4 | Emission Unit LV-S3 | Emission Unit HV-S3A | Emission Unit HV-S3B | Emission Unit HV-S4 |
| 7440-29-1 | Thorium-232 | 3.85E+00 | 3.85E+00 | 7.04E-01 | 3.16E+00 | 3.16E+00 | 3.16E+00 |
| 13968-55-3 | Uranium-233 | 1.79E+01 | 1.79E+01 | 1.31E+01 | 4.85E+00 | 4.85E+00 | 4.85E+00 |
| 13966-29-5 | Uranium-234 | 2.12E+01 | 2.12E+01 | 7.60E+00 | 1.36E+01 | 1.36E+01 | 1.36E+01 |
| 15117-96-1 | Uranium-235 | 1.30E+00 | 1.30E+00 | 2.93E-01 | 1.01E+00 | 1.01E+00 | 1.01E+00 |
| 13982-70-2 | Uranium-236 | 1.37E+00 | 1.37E+00 | 8.79E-01 | 4.89E-01 | 4.89E-01 | 4.89E-01 |
| 7440-61-1 | Uranium-238 | 1.34E+01 | 1.34E+01 | 5.65E+00 | 7.80E+00 | 7.80E+00 | 7.80E+00 |
| 10098-91-6 | Yttrium-90 | 5.18E+07 | 5.18E+07 | 1.32E+06 | 5.10E+07 | 5.10E+07 | 5.10E+07 |
| 13967-48-1 | Ruthenium-106 | 6.10E+03 | 6.10E+03 | 6.50E+03 | 1.40E+03 | 1.40E+03 | 1.40E+03 |
| 13967-70-9 | Cesium-134 | 4.39E+03 | 4.39E+03 | 6.60E-01 | 4.54E+03 | 4.54E+03 | 4.54E+03 |
| 13981-97-0 | Barium-137m | 4.58E+06 | 4.58E+06 | 6.87E+02 | 4.73E+06 | 4.73E+06 | 4.73E+06 |
| 13982-10-0 | Plutonium-242 | 2.01E+00 | 2.01E+00 | 3.20E-03 | 2.02E+00 | 2.02E+00 | 2.02E+00 |
| 13982-63-3 | Radium-226 | 2.12E-01 | 2.12E-01 | 1.43E+00 | 2.07E-01 | 2.07E-01 | 2.07E-01 |
| 14158-29-3 | Uranium-232 | 1.90E+02 | 1.90E+02 | 1.39E+02 | 5.14E+01 | 5.14E+01 | 5.14E+01 |
| 14331-85-2 | Protactinium-231 | 2.36E+03 | 2.36E+03 | 1.59E+04 | 2.30E+03 | 2.30E+03 | 2.30E+03 |
| 14336-70-0 | Nickel-59 | 3.17E+03 | 3.17E+03 | 4.40E+02 | 2.76E+03 | 2.76E+03 | 2.76E+03 |
| 14952-40-0 | Actinium-227 | 1.07E+03 | 1.07E+03 | 7.21E+03 | 1.05E+03 | 1.05E+03 | 1.05E+03 |
| 14993-75-0 | Americium-243 | 5.51E+01 | 5.51E+01 | 7.42E-02 | 5.53E+01 | 5.53E+01 | 5.53E+01 |
| 15262-20-1 | Radium-228 | 2.22E+02 | 2.22E+02 | 1.49E+03 | 2.17E+02 | 2.17E+02 | 2.17E+02 |
| 15510-73-3 | Curium-242 | 2.26E+02 | 2.26E+02 | 2.45E-02 | 2.27E+02 | 2.27E+02 | 2.27E+02 |
| 15594-54-4 | Thorium-229 | 9.25E+00 | 9.25E+00 | 1.69E+00 | 7.59E+00 | 7.59E+00 | 7.59E+00 |
| 15751-77-6 | Zirconium-93 | 7.62E+03 | 7.62E+03 | 5.12E+04 | 7.44E+03 | 7.44E+03 | 7.44E+03 |
| 7440-03-1 | Niobium-93m | 6.86E+03 | 6.86E+03 | 4.62E+04 | 6.71E+03 | 6.71E+03 | 6.71E+03 |

Table 10-1 Annual Possession Quantities for Radionuclides for Pretreatment, LAW Vitrification, and HLW Vitrification Processes

| CAS Number | Radionuclide | APQ (Ci/yr) | | | | | |
|---|---|---|---|---|---|---|---|
| | | Emission Unit PT-S3 | Emission Unit PT-S4 | Emission Unit LV-S3 | Emission Unit HV-S3A | Emission Unit HV-S3B | Emission Unit HV-S4 |
| no cas # | Cadmium-113m3 | 1.90E+04 | 1.90E+04 | 1.09E+04 | 1.02E+04 | 1.02E+04 | 1.02E+04 |
| no cas # | Selenium-793 | 1.76E+02 | 1.76E+02 | 1.87E+02 | 4.03E+01 | 4.03E+01 | 4.03E+01 |
| **Total** | | 1.32E+08 | 1.32E+08 | 2.85E+06 | 6.59E+07 | 6.59E+07 | 1.32E+08 |

**Table 10-2 Annual Possession Quantities for Radionuclides in the Pretreatment Building Ventilation System**

| Radionuclide Emitter Type | PT Ventilation System (Ci/yr) | | |
|---|---|---|---|
| | Emission Unit PT-C2[a] | Emission Unit PT-S1[a] | Emission Unit PT-S2[b] |
| Total α | 4.47E-06 | 3.14E-05 | 1.22E+05 |
| Total β/γ | 2.23E-04 | 3.14E-03 | NA |
| Total β | NA | NA | 5.47E+07 |
| Total γ | NA | NA | 4.95E+07 |
| **Total** | **2.28E-04** | **3.17E-03** | **1.04E+08** |

a [a]Based on anticipated alpha and beta-gamma surface contamination.

b [b]Based on potential releases from maintenance or operation activities.

Table 10-3 Annual Possession Quantities for Radionuclides in the LAW Vitrification Building Ventilation System

| Radionuclide Emitter Type | LAW Ventilation System (Ci/yr) | | | |
|---|---|---|---|---|
| | Emission Unit LV-C2 [a] | Emission Unit LV-S1[a] | Emission Unit LV-S2 [b] | Emission Unit ILAW-C2[c] |
| Total α | 1.95E-06 | 2.55E-02 | 1.67E+03 | 2.39E-04 |
| Total β/γ | 9.75E-05 | 2.58E+00 | NA | 2.39E-03 |
| Total β | NA | NA | 1.45E+05 | NA |
| Total γ | NA | NA | 6.39E+03 | NA |
| **Total** | **9.95E-05** | **2.61E+00** | **1.53E+05** | **2.63E-03** |

a Based on anticipated alpha and beta-gamma surface contamination.

b Based on potential releases from vitrified glass product.

c Based on potential canister residual surface contamination.

**Table 10-4 Annual Possession Quantities for Radionuclides in the HLW Vitrification Building Ventilation System**

| Radionuclide Emitter Type | HLW Ventilation System (Ci/yr) | | | | |
|---|---|---|---|---|---|
| | Emission Unit HV-C2 [a] | Emission Unit HV-C2R [a] | Emission Unit HV-S1 [a] | Emission Unit HV-S2 [b] | Emission Unit IHLW-S1 [c] |
| Total α | 3.27E-06 | 3.27E-06 | 3.58E-03 | 4.72E+05 | 2.68E-04 |
| Total β/γ | 1.21E-03 | 1.21E-03 | 1.36E-01 | NA | 2.95E-03 |
| Total β | NA | NA | NA | 9.18E+07 | NA |
| Total γ | NA | NA | NA | 1.97E+07 | NA |
| **Total** | **1.21E-03** | **1.21E-03** | **1.39E-01** | **1.12E+08** | **3.22E-03** |

a Based on anticipated alpha and beta-gamma surface contamination.

b Based on potential releases from vitrified glass product.

c Based on potential canister residual surface contamination.

Table 10-5 Annual Possession Quantities for Radionuclides in the Analytical Laboratory

| Radionuclide Emitter Type | Analytical Laboratory (Ci/yr) | | |
|---|---|---|---|
| | Emission Unit LB-C2 | Emission Unit LB-S1 | Emission Unit LB-S2 |
| Total α | 4.03E+00 | 4.03E+00 | 4.03E+00 |
| Total β | 1.08E+03 | 1.08E+03 | 1.08E+03 |
| Total γ | 2.85E+02 | 2.85E+02 | 2.85E+02 |
| **Total** | **1.37E+03** | **1.37E+03** | **1.37E+03** |

# Contents

11 Physical Form ..... 11-1

# 11 Physical Form

Please see *Radioactive Air Emissions Notice of Construction Permit Application for the River Protection Project - Waste Treatment Plant* (24590-WTP-RPT-ENV-01-008, Rev 1).

# Contents

12 Release Form ..... 12-1

# 12 Release Form

Please see *Radioactive Air Emissions Notice of Construction Permit Application for the River Protection Project - Waste Treatment Plant* (24590-WTP-RPT-ENV-01-008, Rev 1).

# Contents

13 Release Rates.....13-1

# 13 Release Rates

Please see section 15 of this submittal.

## Contents

14 Location of the Maximally Exposed Individual.....14-1

# 14 Location of the Maximally Exposed Individual

Please see section 15 of this submittal.

## Contents

15 Total Effective Dose Equivalent to the Maximally Exposed Individual ..... 15-1

15.1 Radionuclide Modeling Approach ..... 15-1
15.1.1 Air Dispersion Parameters ..... 15-1
15.1.2 Dose Assessment Parameters ..... 15-2

15.2 Location of the MEI ..... 15-2

15.3 Unabated Radionuclide Dose Calculations ..... 15-3

15.4 Abated Radionuclide Dose Calculations ..... 15-3

15.5 Analysis and Conclusions ..... 15-3

## Tables

Table 15-1 CAP88-PC Modeled Stack Release Parameters from the WTP by Facility and Emission Unit ..... 15-4

Table 15-2 Radionuclide Emissions and Individual and Total Effective Dose Equivalents for Pretreatment Emission Unit PT-S3 ..... 15-5

Table 15-3 Radionuclide Emissions and Individual and Total Effective Dose Equivalents for Pretreatment Emission Unit PT-S4 ..... 15-8

Table 15-4 Radionuclide Emissions and Individual and Total Effective Dose Equivalents for LAW Vitrification Emission Unit LV-S3 ..... 15-11

Table 15-5 Radionuclide Emissions and Individual and Total Effective Dose Equivalents for HLW Vitrification Emission Units HV-S3A and HV-S3B* ..... 15-14

Table 15-6 Radionuclide Emissions and Individual and Total Effective Dose Equivalents for HLW Vitrification Emission Unit HV-S4 ..... 15-17

Table 15-7 Radionuclide Emissions and Individual and Total Effective Dose Equivalents for Pretreatment Building Ventilation Emission Unit PT-C2 ..... 15-20

Table 15-8 Radionuclide Emissions and Individual and Total Effective Dose Equivalents for Pretreatment Building Ventilation Emission Unit PT-S1 ..... 15-21

Table 15-9 Radionuclide Emissions and Individual and Total Effective Dose Equivalents for Pretreatment Building Ventilation Emission Unit PT-S2 ..... 15-22

Table 15-10 Radionuclide Emissions and Individual and Total Effective Dose Equivalents for LAW Building Ventilation Emission Unit LV-C2 ..... 15-23

Table 15-11 Radionuclide Emissions and Individual and Total Effective Dose Equivalents for LAW Building Ventilation Emission Unit LV-S1 ..... 15-24

Table 15-12 Radionuclide Emissions and Individual and Total Effective Dose Equivalents for LAW Building Ventilation Emission Unit LV-S2 ..... 15-25

Table 15-13 Radionuclide Emissions and Individual and Total Effective Dose Equivalents for LAW Building Ventilation Emission Unit ILAW-C2 Canister Storage ..... 15-26

Table 15-14 Radionuclide Emissions and Individual and Total Effective Dose Equivalents for HLW Building Ventilation Emission Unit HV-C2 ..... 15-27

Table 15-15 Radionuclide Emissions and Individual and Total Effective Dose Equivalents for HLW Building Ventilation Emission Unit HV-C2R ..... 15-28

Table 15-16 Radionuclide Emissions and Individual and Total Effective Dose Equivalents for HLW Building Ventilation Emission Unit HV-S1 ..... 15-29

Table 15-17 Radionuclide Emissions and Individual and Total Effective Dose Equivalents for HLW Building Ventilation Emission Unit HV-S2 ..... 15-30

Table 15-18 Radionuclide Emissions and Individual and Total Effective Dose Equivalents for HLW Building Ventilation Emission Unit IHLW-S1 Canister Storage ..... 15-31

Table 15-19 Radionuclide Emissions and Individual and Total Effective Dose Equivalents for Laboratory Stack Emission Unit LB-C2 ..... 15-32

Table 15-20 Radionuclide Emissions and Individual and Total Effective Dose Equivalents for Laboratory Stack Emission Unit LB-S1 ..... 15-33

Table 15-21 Radionuclide Emissions and Individual and Total Effective Dose Equivalents for Laboratory Stack Emission Unit LB-S2 ..... 15-34

## Figures

Figure 15-1 Wind Rose and Wind Speed Histogram for the Hanford Stability Array (STAR) Meteorological Data Set, 200 East Area ..... 15-35

# 15 Total Effective Dose Equivalent to the Maximally Exposed Individual

## 15.1 Radionuclide Modeling Approach

The total effective dose equivalent (TEDE) to the maximally exposed individual (MEI) resulting from the operation of the Hanford Tank Waste Treatment and Immobilization Plant (WTP) was calculated using *Clean Air Act Assessment Package - Personal Computer* (CAP88-PC) (EPA 1988) model. The CAP88-PC model is an Environmental Protection Agency (EPA) approved computer model for estimation of dose from radionuclide emission releases to the atmosphere. The EPA and the US Department of Energy (DOE) developed the CAP88-PC model for the purpose of demonstrating compliance with radionuclide emissions to air under 40 CFR Part 61, *National Emission Standards for Hazardous Air Pollutants* (NESHAPS). The CAP88-PC model is a mathematical program that integrates procedures for calculating environmental transport and dose estimation of radionuclide emissions.

The CAP88-PC model provides a methodology for assessments of both collective populations and maximally exposed individuals. An individual run type was selected to assess "worst-case" dose levels at the MEI location, because collective doses are distributed over the population and therefore may result in lower dose estimates.

### 15.1.1 Air Dispersion Parameters

The CAP88-PC model uses a modified Gaussian plume equation to estimate the dispersion of radionuclides in air, but does not include topographic effects such as elevated terrain. The results of the air dispersion analysis are sector-averaged air concentrations used in the dose estimation.

Plume Rise

The plume rise is added to the actual physical stack height to determine the effective stack height. The plume centerline is shifted from the physical height to the effective stack height as it moves downward. The plume rise can be calculated in the model by assuming either a momentum or buoyant-driven plume. The plume rise from release points with stack gas temperatures that are the same as, or near, ambient air temperature will be dominated by the plume's momentum. Because most radionuclide releases at the WTP, including all ventilation area release points, are at or near ambient air temperature, the momentum flux option was used to calculate plume rise.

Meteorological Data

The CAP88-PC modeling was performed using a composite 14-year sector-averaging stability array (STAR) meteorological data set for 1983 through 1996. The array includes annual-average frequencies for 8 wind speed categories for 16 wind directions and each Pasquill atmospheric stability category. The meteorological data was obtained from the Hanford 200 East Area (Station 6), an onsite Hanford meteorological station. Wind speed data was collected at a standard 10-meter anemometer height. The prevailing wind direction is from the west-northwest, so that the radionuclide emissions will primarily be transported in easterly and southerly directions from the WTP Site. A wind-rose and wind speed histogram of the STAR meteorological data set is provided in Figure 15-1.

Modeling input parameters were assumed to be 16 centimeters per year for annual precipitation and 12 °C for ambient air temperature. The mixing height was assumed to be 1000 meters.

Release Point Source Data

Stack-specific release characteristics were used for modeling each emission unit identified at the WTP that would release, or have the potential to release, radionuclides. Stack height, stack diameter, and stack gas exit velocities are summarized in Table 15-1. Using the stack release parameters, and dose assessment parameters discussed below, unit dose conversion factors were calculated by the model for each emission unit.

Radionuclide Emission Rates

The unabated and abated radionuclide emission rates presented were used to determine the dose results. The effective dose equivalent for each radionuclide was determined for both unabated and abated radionuclide emissions by multiplying the emission rates by the correlating dose conversion factors from the modeling output. Doses calculated for individual radionuclides by emission unit were summed to determine a TEDE for the emission unit. Emissions, dose conversion factors, and doses for each emission unit are presented in Tables 15-2 through 15-21 of this section.

### 15.1.2 Dose Assessment Parameters

Dose and risk are estimated using inhalation and ingestion intake rates combined with air and ground surface concentrations and dose and risk conversion factors.

Model Default-Parameter Values

The CAP88-PC modeling was performed using Hanford-specific default values, as agreed upon by DOE and the WDOH (Conklin 2001) for use in support of notices of construction for the WTP as required by WAC 246-247-060 and WAC 246-247-110(2). The CAP88-PC model also allows for the assessment of dose based on different food scenarios for the intake of vegetables, beef, and milk. The CAP88-PC model was run using a "local" food source for offsite receptors that assumes all food is grown at the location of the receptor, and therefore maximizes the potential exposure due to the presence of vegetable gardens and meat- or milk-producing animals in unrestricted areas surrounding the WTP. A regional food source was used for onsite receptors, which assumes all food is produced within the assessment area (that is, within 80 kilometers of the source).

## 15.2 Location of the MEI

Screening runs using the CAP88-PC model were performed to identify the wind direction and distance that produced the highest TEDE. A receptor grid was developed that extended in each wind direction to the nearest public access location, location along the Columbia River, or Hanford property boundary. The modeling showed that the prevailing wind direction (see Figure 15-1) strongly transports the radionuclides in the east-southeast direction, so the highest doses occur in that sector. Two receptor locations in the east-southeast direction were considered: the Energy Northwest facility and the nearest offsite location along the property boundary. The MEI was determined to be the property boundary, which used a local food source. Once the wind direction and distance to the MEI were determined, the CAP88-PC model was rerun to obtain individual dose estimates contributed by each radionuclide.

## 15.3 Unabated Radionuclide Dose Calculations

The unabated TEDE to the MEI contributed by each radionuclide for each emission unit is presented in Tables 15-2 through 15-21. The percent contribution of each radionuclide to the unabated TEDE is also presented.

## 15.4 Abated Radionuclide Dose Calculations

The abated TEDE at the MEI contributed by each radionuclide for each emission unit is presented in Tables 15-2 through 15-21. The percent contribution of each radionuclide to the abated TEDE is also presented.

## 15.5 Analysis and Conclusions

Unabated Dose

As shown in Table 15-5, the HLW vitrification process results in the highest unabated TEDE. An unabated dose of 2.77E + 04 mrem/yr is expected from emission unit HV-S3A or HV-S3B. This is followed by the LAW vitrification and pretreatment processes. $^{90}$Sr is the greatest contributor (45 %) to the unabated TEDE for emission unit HV-S3A or HV-S3B.

For the emissions from WTP building ventilation systems, the C5 air has the highest predicted unabated TEDE to the MEI, with C2 and C3 air having significantly lower unabated dose levels. For laboratory emissions, the C5 zone exhaust has the highest predicted unabated TEDE.

Abated Dose

The TEDE to the MEI from abated sources takes into account the removal of radionuclide emissions from the exhaust streams through the use of the proposed emission control equipment. Using abated radionuclide emission rates, the predicted combined TEDE to the MEI for WTP is 0.35 mrem/yr. The highest abated TEDE to the MEI for WTP process emission units is 2.88E-01 mrem/yr from LAW vitrification (emission unit LV-S3). This is followed by the doses from HLW vitrification and pretreatment processes. $^{14}$C is the largest contributor (92 %) to the TEDE from the LAW vitrification processes.

For emissions from WTP building ventilation system, the C5 air has the highest predicted abated TEDE to the MEI. For laboratory emissions, the C2 and C3 zone exhausts have the highest predicted abated TEDE, but laboratory abated doses are very low overall.

Table 15-1 CAP88-PC Modeled Stack Release Parameters from the WTP by Facility and Emission Unit

| Facility | Emission Unit | Stack Height (meters) | Stack Diameter (meters) | Stack Gas Exit Velocity (meters per second) |
|---|---|---|---|---|
| Pretreatment | PT-C2 | 39.32 | 1.16 | 17.78 |
| | PT-S1 | 60.96 | 1.25 | 17.78 |
| | PT-S2 | 60.96 | 1.48 | 17.78 |
| | PT-S3 | 60.96 | 0.28 | 17.78 |
| | PT-S4 | 60.96 | 1.21 | 17.78 |
| LAW | LV-C2 | 23.77 | 1.19 | 17.78 |
| | ILAW-C2 | 23.77 | 1.02 | 17.78 |
| | LV-S1 | 60.96 | 1.26 | 17.78 |
| | LV-S2 | 60.96 | 1.27 | 17.78 |
| | LV-S3 | 60.96 | 0.32 | 30.48 |
| HLW | HV-C2 | 28.96 | 1.74 | 17.78 |
| | HV-S1 | 60.96 | 1.37 | 17.78 |
| | IHLW-S1 | 60.96 | 0.66 | 17.18 |
| | HV-S2 | 60.96 | 1.34 | 17.78 |
| | HV-S3 | 60.96 | 0.26 | 17.78 |
| | HV-S4 | 60.96 | 0.37 | 17.78 |
| LAB | LB-C2 | 22.86 | 1.16 | 17.78 |
| | LB-S1 | 22.86 | 1.65 | 17.78 |
| | LB-S2 | 22.86 | 0.82 | 17.78 |

**Table 15-2 Radionuclide Emissions and Individual and Total Effective Dose Equivalents for Pretreatment Emission Unit PT-S3**

| CAS Number | Radionuclide | Unabated Emission (Ci/yr) | Abated Emission (Ci/yr) | DCF (mrem/Ci) | Unabated Dose (mrem/yr) | Percent Contribution (%) | Abated Dose (mrem/yr) | Percent Contribution (%) |
|---|---|---|---|---|---|---|---|---|
| 14596-10-2 | Americium-241 | 1.24E+00 | 9.31E-09 | 6.48E+00 | 8.04E+00 | 37.23% | 6.03E-08 | 0.01% |
| 14762-75-5 | Carbon-14 | 5.48E-03 | 5.48E-03 | 8.19E-04 | 4.49E-06 | 0.00% | 4.49E-06 | 0.44% |
| 10198-40-0 | Cobalt-60 | 2.05E-01 | 1.54E-09 | 1.38E-01 | 2.83E-02 | 0.13% | 2.12E-10 | 0.00% |
| 15757-87-6 | Curium-243 | 5.92E-02 | 4.44E-10 | 4.35E+00 | 2.57E-01 | 1.19% | 1.93E-09 | 0.00% |
| 13981-15-2 | Curium-244 | 4.44E-02 | 3.33E-10 | 3.42E+00 | 1.52E-01 | 0.70% | 1.14E-09 | 0.00% |
| 10045-97-3 | Cesium-137 | 2.19E+02 | 1.64E-06 | 1.48E-02 | 3.24E+00 | 15.01% | 2.43E-08 | 0.00% |
| 14683-23-9 | Europium-152 | 2.38E-02 | 1.78E-10 | 1.36E-01 | 3.23E-03 | 0.01% | 2.43E-11 | 0.00% |
| 15585-10-1 | Europium-154 | 7.71E-01 | 5.79E-09 | 1.10E-01 | 8.48E-02 | 0.39% | 6.37E-10 | 0.00% |
| 14391-16-3 | Europium-155 | 4.96E-01 | 3.73E-09 | 4.42E-03 | 2.19E-03 | 0.01% | 1.65E-11 | 0.00% |
| 10028-17-8 | Tritium | 1.20E+02 | 9.54E+01 | 1.05E-05 | 1.26E-03 | 0.01% | 1.00E-03 | 97.96% |
| 15046-84-1 | Iodine-129 | 7.93E-05 | 2.38E-05 | 6.81E-01 | 5.40E-05 | 0.00% | 1.62E-05 | 1.59% |
| 13981-37-8 | Nickel-63 | 9.83E-02 | 7.38E-10 | 1.44E-04 | 1.42E-05 | 0.00% | 1.06E-13 | 0.00% |
| 13994-20-2 | Neptunium-237 | 1.48E-03 | 1.11E-11 | 5.91E+00 | 8.72E-03 | 0.04% | 6.55E-11 | 0.00% |
| 13981-16-3 | Plutonium-238 | 4.83E-03 | 3.63E-11 | 3.92E+00 | 1.89E-02 | 0.09% | 1.42E-10 | 0.00% |
| 15117-48-3 | Plutonium-239 | 4.29E-02 | 3.22E-10 | 4.23E+00 | 1.81E-01 | 0.84% | 1.36E-09 | 0.00% |
| 14119-33-6 | Plutonium-240 | 2.39E-03 | 1.79E-11 | 4.23E+00 | 1.01E-02 | 0.05% | 7.59E-11 | 0.00% |
| 14119-32-5 | Plutonium-241 | 3.03E-01 | 2.28E-09 | 6.67E-02 | 2.02E-02 | 0.09% | 1.52E-10 | 0.00% |
| 14234-35-6 | Antimony-125 | 7.06E-01 | 5.30E-09 | 1.46E-02 | 1.03E-02 | 0.05% | 7.74E-11 | 0.00% |
| 15715-94-3 | Samarium-151 | 4.63E+00 | 3.48E-08 | 3.86E-04 | 1.79E-03 | 0.01% | 1.34E-11 | 0.00% |
| 15832-50-5 | Tin-126 | 4.04E-03 | 3.04E-11 | 1.82E-03 | 7.36E-06 | 0.00% | 5.52E-14 | 0.00% |
| 10098-97-2 | Strontium-90 | 1.49E+02 | 1.12E-06 | 6.29E-02 | 9.34E+00 | 43.27% | 7.01E-08 | 0.01% |

**Table 15-2 Radionuclide Emissions and Individual and Total Effective Dose Equivalents for Pretreatment Emission Unit PT-S3**

| CAS Number | Radionuclide | Unabated Emission (Ci/yr) | Abated Emission (Ci/yr) | DCF (mrem/Ci) | Unabated Dose (mrem/yr) | Percent Contribution (%) | Abated Dose (mrem/yr) | Percent Contribution (%) |
|---|---|---|---|---|---|---|---|---|
| 14133-76-7 | Technetium-99 | 5.60E-01<br>(5.73E-01) [c] | 4.20E-09<br>(4.31E-09) [c] | 1.26E-02 | 7.05E-03<br>(7.22E-03) [c] | 0.03% | 5.29E-11<br>(5.43E-11) [c] | 0.00% |
| 7440-29-1 | Thorium-232 | 2.57E-05 | 1.93E-13 | 4.07E+00 | 1.05E-04 | 0.00% | 7.86E-13 | 0.00% |
| 13968-55-3 | Uranium-233 | 2.27E-04 | 1.70E-12 | 1.61E+00 | 3.65E-04 | 0.00% | 2.74E-12 | 0.00% |
| 13966-29-5 | Uranium-234 | 1.86E-04 | 1.40E-12 | 1.59E+00 | 2.96E-04 | 0.00% | 2.22E-12 | 0.00% |
| 15117-96-1 | Uranium-235 | 9.63E-06 | 7.23E-14 | 1.52E+00 | 1.46E-05 | 0.00% | 1.10E-13 | 0.00% |
| 13982-70-2 | Uranium-236 | 1.61E-05 | 1.21E-13 | 1.50E+00 | 2.41E-05 | 0.00% | 1.81E-13 | 0.00% |
| 7440-61-1 | Uranium-238 | 1.19E-04 | 8.90E-13 | 1.41E+00 | 1.67E-04 | 0.00% | 1.26E-12 | 0.00% |
| 10098-91-6 | Yttrium-90 | 1.91E+02 | 1.43E-06 | 1.82E-04 | 3.47E-02 | 0.16% | 2.61E-10 | 0.00% |
| 13967-48-1 | Ruthenium-106 | 5.88E-02 | 4.41E-10 | 8.22E-03 | 4.83E-04 | 0.00% | 3.63E-12 | 0.00% |
| 13967-70-9 | Cesium-134 | 2.85E-02 | 2.14E-10 | 5.60E-02 | 1.60E-03 | 0.01% | 1.20E-11 | 0.00% |
| 13981-97-0 | Barium-137m | 2.97E+01 | 2.23E-07 | 1.15E-12 | 3.41E-11 | 0.00% | 2.56E-19 | 0.00% |
| 13982-10-0 | Plutonium-242 | 7.06E-06 | 5.30E-14 | 4.02E+00 | 2.84E-05 | 0.00% | 2.13E-13 | 0.00% |
| 13982-63-3 | Radium-226 | 1.23E-06 | 9.27E-15 | 2.47E-01 | 3.05E-07 | 0.00% | 2.29E-15 | 0.00% |
| 14158-29-3 | Uranium-232 | 2.41E-03 | 1.81E-11 | 5.65E+00 | 1.36E-02 | 0.06% | 1.02E-10 | 0.00% |
| 14331-85-2 | Protactinium-231 | 1.37E-02 | 1.03E-10 | 5.90E+00 | 8.10E-02 | 0.38% | 6.08E-10 | 0.00% |
| 14336-70-0 | Nickel-59 | 1.42E-02 | 1.07E-10 | 1.71E-04 | 2.44E-06 | 0.00% | 1.83E-14 | 0.00% |
| 14952-40-0 | Actinium-227 | 6.24E-03 | 4.68E-11 | 7.55E+00 | 4.71E-02 | 0.22% | 3.54E-10 | 0.00% |
| 14993-75-0 | Americium-243 | 1.94E-04 | 1.45E-12 | 6.49E+00 | 1.26E-03 | 0.01% | 9.44E-12 | 0.00% |
| 15262-20-1 | Radium-228 | 1.29E-03 | 9.70E-12 | 1.04E-01 | 1.34E-04 | 0.00% | 1.01E-12 | 0.00% |
| 15510-73-3 | Curium-242 | 1.14E-03 | 8.55E-12 | 2.10E-01 | 2.39E-04 | 0.00% | 1.80E-12 | 0.00% |
| 15594-54-4 | Thorium-229 | 5.39E-05 | 4.04E-13 | 7.93E+00 | 4.27E-04 | 0.00% | 3.21E-12 | 0.00% |
| 15751-77-6 | Zirconium-93 | 4.43E-02 | 3.33E-10 | 6.68E-04 | 2.96E-05 | 0.00% | 2.22E-13 | 0.00% |

**Table 15-2 Radionuclide Emissions and Individual and Total Effective Dose Equivalents for Pretreatment Emission Unit PT-S3**

| CAS Number | Radionuclide | Unabated Emission (Ci/yr) | Abated Emission (Ci/yr) | DCF (mrem/Ci) | Unabated Dose (mrem/yr) | Percent Contribution (%) | Abated Dose (mrem/yr) | Percent Contribution (%) |
|---|---|---|---|---|---|---|---|---|
| 7440-03-1 | Niobium-93m | 4.00E-02 | 3.00E-10 | 1.13E-03 | 4.52E-05 | 0.00% | 3.39E-13 | 0.00% |
| no cas # | Cadmium-113m [3] | 1.38E-01 | 1.04E-09 | 0.00E+00 | 0.00E+00 | 0.00% | 0.00E+00 | 0.00% |
| no cas # | Selenium-79 [3] | 1.69E-03 | 1.27E-11 | 0.00E+00 | 0.00E+00 | 0.00% | 0.00E+00 | 0.00% |
| | Total | 7.17E+02 | 9.54E+01 | na | 2.16E+01 | 100.00% | 1.02E-03 | 100.00% |

Notes:

a The unit dose conversion factor is used to calculate both unabated and abated individual doses.

b The CAP88-PC (EPA 1998) dose model does not currently accommodate these radionuclides; therefore, zero dose values are shown here. Based on emission rates, these radionuclides would have a minor impact on TEDE results.

c The emissions and related doses without the technetium ion exchange systems are shown in parenthesis. As shown in this table, the resulting emissions and doses with and without the technetium ion exchange systems are similar for this emission unit.

**Table 15-3 Radionuclide Emissions and Individual and Total Effective Dose Equivalents for Pretreatment Emission Unit PT-S4**

| CAS Number | Radionuclide | Unabated Emission (Ci/yr) | Abated Emission (Ci/yr) | DCF (mrem/Ci) | Unabated Dose (mrem/yr) | Percent Contribution (%) | Abated Dose (mrem/yr) | Percent Contribution (%) |
|---|---|---|---|---|---|---|---|---|
| 14596-10-2 | Americium-241 | 2.13E+01 | 2.13E-05 | 5.91E+00 | 1.26E+02 | 39.33% | 1.26E-04 | 18.66% |
| 14762-75-5 | Carbon-14 | 3.57E-02 | 3.57E-02 | 7.42E-04 | 2.65E-05 | 0.00% | 2.65E-05 | 3.92% |
| 10198-40-0 | Cobalt-60 | 2.41E+00 | 2.41E-06 | 1.28E-01 | 3.09E-01 | 0.10% | 3.09E-07 | 0.05% |
| 15757-87-6 | Curium-243 | 7.09E-01 | 7.09E-07 | 3.97E+00 | 2.81E+00 | 0.88% | 2.81E-06 | 0.42% |
| 13981-15-2 | Curium-244 | 5.31E-01 | 5.31E-07 | 3.12E+00 | 1.66E+00 | 0.52% | 1.66E-06 | 0.25% |
| 10045-97-3 | Cesium-137 | 2.77E+03 | 2.77E-03 | 1.37E-02 | 3.79E+01 | 11.84% | 3.79E-05 | 5.62% |
| 14683-23-9 | Europium-152 | 2.82E-01 | 2.82E-07 | 1.26E-01 | 3.55E-02 | 0.01% | 3.55E-08 | 0.01% |
| 15585-10-1 | Europium-154 | 1.28E+01 | 1.28E-05 | 1.02E-01 | 1.31E+00 | 0.41% | 1.31E-06 | 0.19% |
| 14391-16-3 | Europium-155 | 7.82E+00 | 7.82E-06 | 4.09E-03 | 3.20E-02 | 0.01% | 3.20E-08 | 0.00% |
| 10028-17-8 | Tritium | 3.01E-01 | 3.01E-01 | 9.48E-06 | 2.85E-06 | 0.00% | 2.85E-06 | 0.42% |
| 15046-84-1 | Iodine-129 | 4.72E-04 | 4.72E-04 | 6.90E-01 | 3.26E-04 | 0.00% | 3.26E-04 | 48.22% |
| 13981-37-8 | Nickel-63 | 1.43E+00 | 1.43E-06 | 1.33E-04 | 1.91E-04 | 0.00% | 1.91E-10 | 0.00% |
| 13994-20-2 | Neptunium-237 | 1.76E-02 | 1.76E-08 | 5.39E+00 | 9.48E-02 | 0.03% | 9.48E-08 | 0.01% |
| 13981-16-3 | Plutonium-238 | 8.30E-02 | 8.30E-08 | 3.58E+00 | 2.97E-01 | 0.09% | 2.97E-07 | 0.04% |
| 15117-48-3 | Plutonium-239 | 7.36E-01 | 7.36E-07 | 3.86E+00 | 2.84E+00 | 0.89% | 2.84E-06 | 0.42% |
| 14119-33-6 | Plutonium-240 | 4.07E-02 | 4.07E-08 | 3.86E+00 | 1.57E-01 | 0.05% | 1.57E-07 | 0.02% |
| 14119-32-5 | Plutonium-241 | 5.21E+00 | 5.21E-06 | 6.08E-02 | 3.17E-01 | 0.10% | 3.17E-07 | 0.05% |
| 14234-35-6 | Antimony-125 | 1.02E+01 | 1.02E-05 | 1.35E-02 | 1.38E-01 | 0.04% | 1.38E-07 | 0.02% |
| 15715-94-3 | Samarium-151 | 5.56E+01 | 5.56E-05 | 3.52E-04 | 1.96E-02 | 0.01% | 1.96E-08 | 0.00% |
| 15832-50-5 | Tin-126 | 5.48E-02 | 5.48E-08 | 1.68E-03 | 9.21E-05 | 0.00% | 9.21E-11 | 0.00% |
| 10098-97-2 | Strontium-90 | 2.48E+03 | 2.48E-03 | 5.82E-02 | 1.44E+02 | 45.08% | 1.44E-04 | 21.39% |
| 14133-76-7 | Technetium-99 | 6.75E+00 | 6.75E-06 | 1.17E-02 | 7.89E-02 | 0.02% | 7.89E-08 | 0.01% |

**Table 15-3 Radionuclide Emissions and Individual and Total Effective Dose Equivalents for Pretreatment Emission Unit PT-S4**

| CAS Number | Radionuclide | Unabated Emission (Ci/yr) | Abated Emission (Ci/yr) | DCF (mrem/Ci) | Unabated Dose (mrem/yr) | Percent Contribution (%) | Abated Dose (mrem/yr) | Percent Contribution (%) |
|---|---|---|---|---|---|---|---|---|
| 7440-29-1 | Thorium-232 | 2.57E-04 | 2.57E-10 | 3.71E+00 | 9.54E-04 | 0.00% | 9.54E-10 | 0.00% |
| 13968-55-3 | Uranium-233 | 1.55E-03 | 1.55E-09 | 1.46E+00 | 2.26E-03 | 0.00% | 2.26E-09 | 0.00% |
| 13966-29-5 | Uranium-234 | 1.55E-03 | 1.55E-09 | 1.45E+00 | 2.24E-03 | 0.00% | 2.24E-09 | 0.00% |
| 15117-96-1 | Uranium-235 | 8.90E-05 | 8.90E-11 | 1.39E+00 | 1.24E-04 | 0.00% | 1.24E-10 | 0.00% |
| 13982-70-2 | Uranium-236 | 1.14E-04 | 1.14E-10 | 1.37E+00 | 1.56E-04 | 0.00% | 1.56E-10 | 0.00% |
| 7440-61-1 | Uranium-238 | 1.01E-03 | 1.01E-09 | 1.29E+00 | 1.30E-03 | 0.00% | 1.30E-09 | 0.00% |
| 10098-91-6 | Yttrium-90 | 3.19E+03 | 3.19E-03 | 1.67E-04 | 5.32E-01 | 0.17% | 5.32E-07 | 0.08% |
| 13967-48-1 | Ruthenium-106 | 6.00E-01 | 6.00E-07 | 7.53E-03 | 4.52E-03 | 0.00% | 4.52E-09 | 0.00% |
| 13967-70-9 | Cesium-134 | 3.60E-01 | 3.60E-07 | 5.18E-02 | 1.86E-02 | 0.01% | 1.86E-08 | 0.00% |
| 13981-97-0 | Barium-137m | 3.75E+02 | 3.75E-04 | 1.09E-12 | 4.09E-10 | 0.00% | 4.09E-16 | 0.00% |
| 13982-10-0 | Plutonium-242 | 1.21E-04 | 1.21E-10 | 3.67E+00 | 4.45E-04 | 0.00% | 4.45E-10 | 0.00% |
| 13982-63-3 | Radium-226 | 1.31E-05 | 1.31E-11 | 2.27E-01 | 2.96E-06 | 0.00% | 2.96E-12 | 0.00% |
| 14158-29-3 | Uranium-232 | 1.64E-02 | 1.64E-08 | 5.16E+00 | 8.46E-02 | 0.03% | 8.46E-08 | 0.01% |
| 14331-85-2 | Protactinium-231 | 1.45E-01 | 1.45E-07 | 5.38E+00 | 7.81E-01 | 0.24% | 7.81E-07 | 0.12% |
| 14336-70-0 | Nickel-59 | 2.08E-01 | 2.08E-07 | 1.58E-04 | 3.29E-05 | 0.00% | 3.29E-11 | 0.00% |
| 14952-40-0 | Actinium-227 | 6.60E-02 | 6.60E-08 | 6.88E+00 | 4.54E-01 | 0.14% | 4.54E-07 | 0.07% |
| 14993-75-0 | Americium-243 | 3.33E-03 | 3.33E-09 | 5.91E+00 | 1.97E-02 | 0.01% | 1.97E-08 | 0.00% |
| 15262-20-1 | Radium-228 | 1.37E-02 | 1.37E-08 | 9.54E-02 | 1.30E-03 | 0.00% | 1.30E-09 | 0.00% |
| 15510-73-3 | Curium-242 | 1.36E-02 | 1.36E-08 | 1.92E-01 | 2.62E-03 | 0.00% | 2.62E-09 | 0.00% |
| 15594-54-4 | Thorium-229 | 5.69E-04 | 5.69E-10 | 7.23E+00 | 4.12E-03 | 0.00% | 4.12E-09 | 0.00% |
| 15751-77-6 | Zirconium-93 | 4.69E-01 | 4.69E-07 | 6.10E-04 | 2.86E-04 | 0.00% | 2.86E-10 | 0.00% |
| 7440-03-1 | Niobium-93m | 4.23E-01 | 4.23E-07 | 1.04E-03 | 4.39E-04 | 0.00% | 4.39E-10 | 0.00% |
| no cas # | Cadmium-113m [3] | 1.58E+00 | 1.58E-06 | 0.00E+00 | 0.00E+00 | 0.00% | 0.00E+00 | 0.00% |

**Table 15-3 Radionuclide Emissions and Individual and Total Effective Dose Equivalents for Pretreatment Emission Unit PT-S4**

| CAS Number | Radionuclide | Unabated Emission (Ci/yr) | Abated Emission (Ci/yr) | DCF (mrem/Ci) | Unabated Dose (mrem/yr) | Percent Contribution (%) | Abated Dose (mrem/yr) | Percent Contribution (%) |
|---|---|---|---|---|---|---|---|---|
| no cas # | Selenium-79 [3] | 1.73E-02 | 1.73E-08 | 0.00E+00 | 0.00E+00 | 0.00% | 0.00E+00 | 0.00% |
| | Total | 8.94E+03 | 3.46E-01 | na | 3.20E+02 | 100.00% | 6.75E-04 | 100.00% |

Notes:

a The unit dose conversion factor is used to calculate both unabated and abated individual doses.

b The CAP88-PC (EPA 1998) dose model does not currently accommodate these radionuclides; therefore, zero dose values are shown here. Based on emission rates, these radionuclides would have a minor impact on TEDE results.

**Table 15-4 Radionuclide Emissions and Individual and Total Effective Dose Equivalents for LAW Vitrification Emission Unit LV-S3**

| CAS Number | Radionuclide | Unabated Emission (Ci/yr) | Abated Emission (Ci/yr) | DCF (mrem/Ci) | Unabated Dose (mrem/yr) | Percent Contribution (%) | Abated Dose (mrem/yr) | Percent Contribution (%) |
|---|---|---|---|---|---|---|---|---|
| 14596-10-2 | Americium-241 | 2.38E+00 | 2.98E-08 | 6.32E+00 | 1.50E+01 | 1.29% | 1.88E-07 | 0.00% |
| 14762-75-5 | Carbon-14 | 3.34E+02 | 3.34E+02 | 7.97E-04 | 2.66E-01 | 0.02% | 2.66E-01 | 92.22% |
| 10198-40-0 | Cobalt-60 | 2.37E+00 | 1.85E-07 | 1.35E-01 | 3.20E-01 | 0.03% | 2.50E-08 | 0.00% |
| 15757-87-6 | Curium-243 | 6.36E-03 | 7.97E-11 | 4.24E+00 | 2.70E-02 | 0.00% | 3.38E-10 | 0.00% |
| 13981-15-2 | Curium-244 | 6.82E-03 | 8.54E-11 | 3.33E+00 | 2.27E-02 | 0.00% | 2.84E-10 | 0.00% |
| 10045-97-3 | Cesium-137 | 1.69E+02 | 1.17E-05 | 1.45E-02 | 2.45E+00 | 0.21% | 1.70E-07 | 0.00% |
| 14683-23-9 | Europium-152 | 8.28E+00 | 1.04E-07 | 1.33E-01 | 1.10E+00 | 0.09% | 1.38E-08 | 0.00% |
| 15585-10-1 | Europium-154 | 2.75E+01 | 3.44E-07 | 1.08E-01 | 2.97E+00 | 0.26% | 3.71E-08 | 0.00% |
| 14391-16-3 | Europium-155 | 4.73E+01 | 5.92E-07 | 4.33E-03 | 2.05E-01 | 0.02% | 2.56E-09 | 0.00% |
| 10028-17-8 | Tritium | 1.64E+02 | 2.33E+01 | 1.02E-05 | 1.67E-03 | 0.00% | 2.38E-04 | 0.08% |
| 15046-84-1 | Iodine-129 | 3.89E+00 | 3.24E-02 | 6.85E-01 | 2.66E+00 | 0.23% | 2.22E-02 | 7.69% |
| 13981-37-8 | Nickel-63 | 3.41E+01 | 1.45E-06 | 1.41E-04 | 4.81E-03 | 0.00% | 2.04E-10 | 0.00% |
| 13994-20-2 | Neptunium-237 | 1.02E-02 | 1.28E-10 | 5.76E+00 | 5.89E-02 | 0.01% | 7.37E-10 | 0.00% |
| 13981-16-3 | Plutonium-238 | 1.38E-02 | 1.73E-10 | 3.82E+00 | 5.27E-02 | 0.00% | 6.59E-10 | 0.00% |
| 15117-48-3 | Plutonium-239 | 1.61E-01 | 2.02E-09 | 4.12E+00 | 6.64E-01 | 0.06% | 8.31E-09 | 0.00% |
| 14119-33-6 | Plutonium-240 | 2.78E-02 | 3.48E-10 | 4.12E+00 | 1.14E-01 | 0.01% | 1.43E-09 | 0.00% |
| 14119-32-5 | Plutonium-241 | 6.87E-01 | 8.61E-09 | 6.50E-02 | 4.47E-02 | 0.00% | 5.59E-10 | 0.00% |
| 14234-35-6 | Antimony-125 | 2.54E+02 | 3.12E-05 | 1.43E-02 | 3.64E+00 | 0.31% | 4.47E-07 | 0.00% |
| 15715-94-3 | Samarium-151 | 1.57E+03 | 1.97E-05 | 3.76E-04 | 5.91E-01 | 0.05% | 7.40E-09 | 0.00% |
| 15832-50-5 | Tin-126 | 9.51E-01 | 1.19E-08 | 1.78E-03 | 1.69E-03 | 0.00% | 2.12E-11 | 0.00% |
| 10098-97-2 | Strontium-90 | 1.03E+04 | 1.29E-04 | 6.15E-02 | 6.32E+02 | 54.38% | 7.90E-06 | 0.00% |

**Table 15-4 Radionuclide Emissions and Individual and Total Effective Dose Equivalents for LAW Vitrification Emission Unit LV-S3**

| CAS Number | Radionuclide | Unabated Emission (Ci/yr) | Abated Emission (Ci/yr) | DCF (mrem/Ci) | Unabated Dose (mrem/yr) | Percent Contribution (%) | Abated Dose (mrem/yr) | Percent Contribution (%) |
|---|---|---|---|---|---|---|---|---|
| 14133-76-7 | Technetium-99 | 1.37E+02<br>(4.05E+03)[c] | 8.76E-06<br>(2.59E-04)[c] | 1.24E-02 | 1.69E+00<br>(5.02E+01)[c] | 0.15%<br>(4.15%)[c] | 1.09E-07<br>(3.21E-06)[c] | 0.00%<br>(0.00%)[c] |
| 7440-29-1 | Thorium-232 | 3.52E-03 | 4.41E-11 | 3.96E+00 | 1.39E-02 | 0.00% | 1.74E-10 | 0.00% |
| 13968-55-3 | Uranium-233 | 6.53E-02 | 8.18E-10 | 1.56E+00 | 1.02E-01 | 0.01% | 1.28E-09 | 0.00% |
| 13966-29-5 | Uranium-234 | 3.80E-02 | 4.76E-10 | 1.55E+00 | 5.89E-02 | 0.01% | 7.38E-10 | 0.00% |
| 15117-96-1 | Uranium-235 | 1.47E-03 | 1.84E-11 | 1.48E+00 | 2.17E-03 | 0.00% | 2.72E-11 | 0.00% |
| 13982-70-2 | Uranium-236 | 4.40E-03 | 5.51E-11 | 1.46E+00 | 6.42E-03 | 0.00% | 8.04E-11 | 0.00% |
| 7440-61-1 | Uranium-238 | 2.83E-02 | 3.54E-10 | 1.38E+00 | 3.90E-02 | 0.00% | 4.88E-10 | 0.00% |
| 10098-91-6 | Yttrium-90 | 1.32E+04 | 1.65E-04 | 1.78E-04 | 2.35E+00 | 0.20% | 2.94E-08 | 0.00% |
| 13967-48-1 | Ruthenium-106 | 1.09E+03 | 1.81E-05 | 8.02E-03 | 8.70E+00 | 0.75% | 1.45E-07 | 0.00% |
| 13967-70-9 | Cesium-134 | 2.20E-02 | 1.53E-09 | 5.48E-02 | 1.21E-03 | 0.00% | 8.37E-11 | 0.00% |
| 13981-97-0 | Barium-137m | 2.29E+01 | 1.59E-06 | 1.13E-12 | 2.59E-11 | 0.00% | 1.80E-18 | 0.00% |
| 13982-10-0 | Plutonium-242 | 1.60E-05 | 2.00E-13 | 3.92E+00 | 6.27E-05 | 0.00% | 7.85E-13 | 0.00% |
| 13982-63-3 | Radium-226 | 4.75E-03 | 7.93E-11 | 2.42E-01 | 1.15E-03 | 0.00% | 1.92E-11 | 0.00% |
| 14158-29-3 | Uranium-232 | 6.93E-01 | 8.68E-09 | 5.51E+00 | 3.82E+00 | 0.33% | 4.78E-08 | 0.00% |
| 14331-85-2 | Protactinium-231 | 5.29E+01 | 8.82E-07 | 5.75E+00 | 3.04E+02 | 26.16% | 5.07E-06 | 0.00% |
| 14336-70-0 | Nickel-59 | 4.95E+00 | 2.10E-07 | 1.67E-04 | 8.26E-04 | 0.00% | 3.50E-11 | 0.00% |
| 14952-40-0 | Actinium-227 | 2.40E+01 | 4.01E-07 | 7.35E+00 | 1.77E+02 | 15.20% | 2.95E-06 | 0.00% |
| 14993-75-0 | Americium-243 | 3.71E-04 | 4.65E-12 | 6.32E+00 | 2.35E-03 | 0.00% | 2.94E-11 | 0.00% |
| 15262-20-1 | Radium-228 | 4.97E+00 | 8.30E-08 | 1.01E-01 | 5.02E-01 | 0.04% | 8.38E-09 | 0.00% |
| 15510-73-3 | Curium-242 | 1.22E-04 | 1.53E-12 | 2.05E-01 | 2.51E-05 | 0.00% | 3.14E-13 | 0.00% |
| 15594-54-4 | Thorium-229 | 2.07E-01 | 3.46E-09 | 7.73E+00 | 1.60E+00 | 0.14% | 2.67E-08 | 0.00% |
| 15751-77-6 | Zirconium-93 | 1.71E+02 | 2.85E-06 | 6.51E-04 | 1.11E-01 | 0.01% | 1.85E-09 | 0.00% |

**Table 15-4 Radionuclide Emissions and Individual and Total Effective Dose Equivalents for LAW Vitrification Emission Unit LV-S3**

| CAS Number | Radionuclide | Unabated Emission (Ci/yr) | Abated Emission (Ci/yr) | DCF (mrem/Ci) | Unabated Dose (mrem/yr) | Percent Contribution (%) | Abated Dose (mrem/yr) | Percent Contribution (%) |
|---|---|---|---|---|---|---|---|---|
| 7440-03-1 | Niobium-93m | 1.54E+02 | 2.57E-06 | 1.10E-03 | 1.69E-01 | 0.01% | 2.82E-09 | 0.00% |
| no cas # | Cadmium-113m[3] | 1.09E+03 | 4.24E-05 | 0.00E+00 | 0.00E+00 | 0.00% | 0.00E+00 | 0.00% |
| no cas # | Selenium-79[3] | 3.13E+01 | 5.22E-07 | 0.00E+00 | 0.00E+00 | 0.00% | 0.00E+00 | 0.00% |
| | Total | 2.89E+04 | 3.57E+02 | na | 1.16E+03 | 100.00% | 2.88E-01 | 100.00% |

Notes:

a The unit dose conversion factor is used to calculate both unabated and abated individual doses.

b The CAP88-PC (EPA 1998) dose model does not currently accommodate these radionuclides; therefore, zero dose values are shown here. Based on emission rates, these radionuclides would have a minor impact on TEDE results.

c The emissions and related doses without the technetium ion exchange systems are shown in parenthesis. As shown in this table, the resulting abated dose with and without the technetium ion exchange systems contributed near 0 % to the overall dose for this emission unit.

**Table 15-5 Radionuclide Emissions and Individual and Total Effective Dose Equivalents for HLW Vitrification Emission Units HV-S3A and HV-S3B***

| CAS Number | Radionuclide | Unabated Emission (Ci/yr) | Abated Emission (Ci/yr) | DCF (mrem/Ci) | Unabated Dose (mrem/yr) | Percent Contribution (%) | Abated Dose (mrem/yr) | Percent Contribution (%) |
|---|---|---|---|---|---|---|---|---|
| 14596-10-2 | Americium-241 | 8.85E+02 | 1.24E-07 | 6.49E+00 | 5.75E+03 | 20.76% | 8.02E-07 | 0.00% |
| 14762-75-5 | Carbon-14 | 2.94E+01 | 2.94E+01 | 8.21E-04 | 2.42E-02 | 0.00% | 2.42E-02 | 94.44% |
| 10198-40-0 | Cobalt-60 | 9.84E+01 | 7.70E-08 | 1.38E-01 | 1.36E+01 | 0.05% | 1.06E-08 | 0.00% |
| 15757-87-6 | Curium-243 | 2.95E+01 | 4.12E-09 | 4.36E+00 | 1.29E+02 | 0.46% | 1.79E-08 | 0.00% |
| 13981-15-2 | Curium-244 | 2.21E+01 | 3.09E-09 | 3.43E+00 | 7.58E+01 | 0.27% | 1.06E-08 | 0.00% |
| 10045-97-3 | Cesium-137 | 5.82E+05 | 4.05E-04 | 1.49E-02 | 8.68E+03 | 31.36% | 6.03E-06 | 0.02% |
| 14683-23-9 | Europium-152 | 5.13E+00 | 7.16E-10 | 1.36E-01 | 6.98E-01 | 0.00% | 9.74E-11 | 0.00% |
| 15585-10-1 | Europium-154 | 5.13E+02 | 7.16E-08 | 1.10E-01 | 5.64E+01 | 0.20% | 7.87E-09 | 0.00% |
| 14391-16-3 | Europium-155 | 2.88E+02 | 4.01E-08 | 4.43E-03 | 1.27E+00 | 0.00% | 1.78E-10 | 0.00% |
| 10028-17-8 | Tritium | 9.06E+02 | 9.11E+01 | 1.05E-05 | 9.51E-03 | 0.00% | 9.57E-04 | 3.74% |
| 15046-84-1 | Iodine-129 | 8.04E-01 | 6.70E-04 | 6.80E-01 | 5.47E-01 | 0.00% | 4.56E-04 | 1.78% |
| 13981-37-8 | Nickel-63 | 1.07E+02 | 5.04E-08 | 1.44E-04 | 1.54E-02 | 0.00% | 7.26E-12 | 0.00% |
| 13994-20-2 | Neptunium-237 | 7.28E-01 | 1.02E-10 | 5.93E+00 | 4.32E+00 | 0.02% | 6.02E-10 | 0.00% |
| 13981-16-3 | Plutonium-238 | 3.44E+00 | 4.81E-10 | 3.93E+00 | 1.35E+01 | 0.05% | 1.89E-09 | 0.00% |
| 15117-48-3 | Plutonium-239 | 3.05E+01 | 4.26E-09 | 4.24E+00 | 1.29E+02 | 0.47% | 1.81E-08 | 0.00% |
| 14119-33-6 | Plutonium-240 | 1.67E+00 | 2.33E-10 | 4.24E+00 | 7.09E+00 | 0.03% | 9.90E-10 | 0.00% |
| 14119-32-5 | Plutonium-241 | 2.16E+02 | 3.02E-08 | 6.68E-02 | 1.45E+01 | 0.05% | 2.02E-09 | 0.00% |
| 14234-35-6 | Antimony-125 | 6.45E+02 | 7.93E-07 | 1.47E-02 | 9.49E+00 | 0.03% | 1.17E-08 | 0.00% |
| 15715-94-3 | Samarium-151 | 1.06E+03 | 1.48E-07 | 3.87E-04 | 4.11E-01 | 0.00% | 5.73E-11 | 0.00% |
| 15832-50-5 | Tin-126 | 1.52E+00 | 2.13E-10 | 1.83E-03 | 2.79E-03 | 0.00% | 3.89E-13 | 0.00% |
| 10098-97-2 | Strontium-90 | 1.98E+05 | 2.77E-05 | 6.30E-02 | 1.25E+04 | 45.13% | 1.74E-06 | 0.01% |
| 14133-76-7 | Technetium-99 | 1.71E+04<br>(1.49E+04)[c] | 1.10E-05<br>(2.96E-05)[c] | 1.27E-02 | 2.17E+02<br>(1.89E+02)[c] | 0.78%<br>(0.68%[c]) | 1.39E-07<br>(3.76E-07)[c] | 0.00%<br>(0.00%)[c] |

**Table 15-5 Radionuclide Emissions and Individual and Total Effective Dose Equivalents for HLW Vitrification Emission Units HV-S3A and HV-S3B***

| CAS Number | Radionuclide | Unabated Emission (Ci/yr) | Abated Emission (Ci/yr) | DCF (mrem/Ci) | Unabated Dose (mrem/yr) | Percent Contribution (%) | Abated Dose (mrem/yr) | Percent Contribution (%) |
|---|---|---|---|---|---|---|---|---|
| 7440-29-1 | Thorium-232 | 7.89E-03 | 1.10E-12 | 4.08E+00 | 3.22E-02 | 0.00% | 4.49E-12 | 0.00% |
| 13968-55-3 | Uranium-233 | 1.21E-02 | 1.69E-12 | 1.61E+00 | 1.95E-02 | 0.00% | 2.72E-12 | 0.00% |
| 13966-29-5 | Uranium-234 | 3.41E-02 | 4.76E-12 | 1.59E+00 | 5.42E-02 | 0.00% | 7.56E-12 | 0.00% |
| 15117-96-1 | Uranium-235 | 2.53E-03 | 3.53E-13 | 1.52E+00 | 3.85E-03 | 0.00% | 5.37E-13 | 0.00% |
| 13982-70-2 | Uranium-236 | 1.22E-03 | 1.71E-13 | 1.50E+00 | 1.83E-03 | 0.00% | 2.56E-13 | 0.00% |
| 7440-61-1 | Uranium-238 | 1.95E-02 | 2.72E-12 | 1.42E+00 | 2.77E-02 | 0.00% | 3.87E-12 | 0.00% |
| 10098-91-6 | Yttrium-90 | 2.55E+05 | 3.55E-05 | 1.82E-04 | 4.64E+01 | 0.17% | 6.47E-09 | 0.00% |
| 13967-48-1 | Ruthenium-106 | 1.15E+02 | 2.13E-11 | 8.23E-03 | 9.44E-01 | 0.00% | 1.76E-13 | 0.00% |
| 13967-70-9 | Cesium-134 | 7.57E+01 | 5.26E-08 | 5.61E-02 | 4.25E+00 | 0.02% | 2.95E-09 | 0.00% |
| 13981-97-0 | Barium-137m | 7.89E+04 | 5.48E-05 | 1.15E-12 | 9.07E-08 | 0.00% | 6.30E-17 | 0.00% |
| 13982-10-0 | Plutonium-242 | 5.04E-03 | 7.03E-13 | 4.03E+00 | 2.03E-02 | 0.00% | 2.83E-12 | 0.00% |
| 13982-63-3 | Radium-226 | 3.45E-04 | 6.42E-14 | 2.48E-01 | 8.56E-05 | 0.00% | 1.59E-14 | 0.00% |
| 14158-29-3 | Uranium-232 | 1.29E-01 | 1.79E-11 | 5.67E+00 | 7.29E-01 | 0.00% | 1.02E-10 | 0.00% |
| 14331-85-2 | Protactinium-231 | 3.84E+00 | 7.14E-10 | 5.91E+00 | 2.27E+01 | 0.08% | 4.22E-09 | 0.00% |
| 14336-70-0 | Nickel-59 | 1.55E+01 | 7.31E-09 | 1.71E-04 | 2.65E-03 | 0.00% | 1.25E-12 | 0.00% |
| 14952-40-0 | Actinium-227 | 1.74E+00 | 3.24E-10 | 7.56E+00 | 1.32E+01 | 0.05% | 2.45E-09 | 0.00% |
| 14993-75-0 | Americium-243 | 1.38E-01 | 1.93E-11 | 6.50E+00 | 8.99E-01 | 0.00% | 1.25E-10 | 0.00% |
| 15262-20-1 | Radium-228 | 3.61E-01 | 6.72E-11 | 1.04E-01 | 3.76E-02 | 0.00% | 6.99E-12 | 0.00% |
| 15510-73-3 | Curium-242 | 5.67E-01 | 7.92E-11 | 2.11E-01 | 1.20E-01 | 0.00% | 1.67E-11 | 0.00% |
| 15594-54-4 | Thorium-229 | 1.51E-02 | 2.80E-12 | 7.95E+00 | 1.20E-01 | 0.00% | 2.23E-11 | 0.00% |
| 15751-77-6 | Zirconium-93 | 1.24E+01 | 2.31E-09 | 6.69E-04 | 8.30E-03 | 0.00% | 1.54E-12 | 0.00% |
| 7440-03-1 | Niobium-93m | 1.12E+01 | 2.08E-09 | 1.13E-03 | 1.26E-02 | 0.00% | 2.35E-12 | 0.00% |

**Table 15-5 Radionuclide Emissions and Individual and Total Effective Dose Equivalents for HLW Vitrification Emission Units HV-S3A and HV-S3B***

| CAS Number | Radionuclide | Unabated Emission (Ci/yr) | Abated Emission (Ci/yr) | DCF (mrem/Ci) | Unabated Dose (mrem/yr) | Percent Contribution (%) | Abated Dose (mrem/yr) | Percent Contribution (%) |
|---|---|---|---|---|---|---|---|---|
| no cas # | Cadmium-113m [3] | 5.08E+02 | 1.81E-07 | 0.00E+00 | 0.00E+00 | 0.00% | 0.00E+00 | 0.00% |
| no cas # | Selenium-79 [3] | 3.31E+00 | 6.15E-13 | 0.00E+00 | 0.00E+00 | 0.00% | 0.00E+00 | 0.00% |
| | Total | 1.13E+06 | 1.21E+02 | na | 2.77E+04 | 100.00% | 2.56E-02 | 100.00% |

*HV-S3A and HV-S3B have the same radionuclide emissions and individual and total effective dose equivalents.

Notes:

a The unit dose conversion factor is used to calculate both unabated and abated individual doses.

b The CAP88-PC (EPA 1998) dose model does not currently accommodate these radionuclides; therefore, zero dose values are shown here. Based on emission rates, these radionuclides would have a minor impact on TEDE results.

c The emissions and related doses without the technetium ion exchange systems are shown in parenthesis. As shown in this table, the resulting emissions and doses with and without the technetium ion exchange systems are similar for this emission unit.

**Table 15-6 Radionuclide Emissions and Individual and Total Effective Dose Equivalents for HLW Vitrification Emission Unit HV-S4**

| CAS Number | Radionuclide | Unabated Emission (Ci/yr) | Abated Emission (Ci/yr) | DCF (mrem/Ci) | Unabated Dose (mrem/yr) | Percent Contribution (%) | Abated Dose (mrem/yr) | Percent Contribution (%) |
|---|---|---|---|---|---|---|---|---|
| 14596-10-2 | Americium-241 | 3.76E-05 | 1.88E-10 | 6.42E+00 | 2.41E-04 | 39.23% | 1.21E-09 | 34.99% |
| 14762-75-5 | Carbon-14 | 5.89E-09 | 5.89E-09 | 8.11E-04 | 4.77E-12 | 0.00% | 4.77E-12 | 0.14% |
| 10198-40-0 | Cobalt-60 | 4.18E-06 | 2.09E-11 | 1.37E-01 | 5.73E-07 | 0.09% | 2.87E-12 | 0.08% |
| 15757-87-6 | Curium-243 | 1.25E-06 | 6.26E-12 | 4.32E+00 | 5.41E-06 | 0.88% | 2.70E-11 | 0.78% |
| 13981-15-2 | Curium-244 | 9.39E-07 | 4.69E-12 | 3.39E+00 | 3.18E-06 | 0.52% | 1.59E-11 | 0.46% |
| 10045-97-3 | Cesium-137 | 4.97E-03 | 2.49E-08 | 1.47E-02 | 7.31E-05 | 11.88% | 3.65E-10 | 10.59% |
| 14683-23-9 | Europium-152 | 2.18E-07 | 1.09E-12 | 1.35E-01 | 2.94E-08 | 0.00% | 1.47E-13 | 0.00% |
| 15585-10-1 | Europium-154 | 2.18E-05 | 1.09E-10 | 1.09E-01 | 2.37E-06 | 0.39% | 1.19E-11 | 0.34% |
| 14391-16-3 | Europium-155 | 1.22E-05 | 6.11E-11 | 4.39E-03 | 5.36E-08 | 0.01% | 2.68E-13 | 0.01% |
| 10028-17-8 | Tritium | 2.18E-06 | 2.18E-06 | 1.04E-05 | 2.27E-11 | 0.00% | 2.27E-11 | 0.66% |
| 15046-84-1 | Iodine-129 | 5.06E-10 | 5.06E-10 | 6.82E-01 | 3.45E-10 | 0.00% | 3.45E-10 | 10.00% |
| 13981-37-8 | Nickel-63 | 2.17E-06 | 1.09E-11 | 1.43E-04 | 3.10E-10 | 0.00% | 1.55E-15 | 0.00% |
| 13994-20-2 | Neptunium-237 | 3.09E-08 | 1.54E-13 | 5.86E+00 | 1.81E-07 | 0.03% | 9.05E-13 | 0.03% |
| 13981-16-3 | Plutonium-238 | 1.46E-07 | 7.31E-13 | 3.89E+00 | 5.69E-07 | 0.09% | 2.84E-12 | 0.08% |
| 15117-48-3 | Plutonium-239 | 1.30E-06 | 6.48E-12 | 4.20E+00 | 5.44E-06 | 0.88% | 2.72E-11 | 0.79% |
| 14119-33-6 | Plutonium-240 | 7.10E-08 | 3.55E-13 | 4.19E+00 | 2.98E-07 | 0.05% | 1.49E-12 | 0.04% |
| 14119-32-5 | Plutonium-241 | 9.19E-06 | 4.59E-11 | 6.61E-02 | 6.07E-07 | 0.10% | 3.04E-12 | 0.09% |
| 14234-35-6 | Antimony-125 | 1.45E-05 | 7.26E-11 | 1.45E-02 | 2.11E-07 | 0.03% | 1.05E-12 | 0.03% |
| 15715-94-3 | Samarium-151 | 4.51E-05 | 2.25E-10 | 3.83E-04 | 1.73E-08 | 0.00% | 8.63E-14 | 0.00% |
| 15832-50-5 | Tin-126 | 6.46E-08 | 3.23E-13 | 1.81E-03 | 1.17E-10 | 0.00% | 5.85E-16 | 0.00% |
| 10098-97-2 | Strontium-90 | 4.45E-03 | 2.23E-08 | 6.24E-02 | 2.78E-04 | 45.16% | 1.39E-09 | 40.28% |
| 14133-76-7 | Technetium-99 | 5.30E-05 | 2.65E-10 | 1.25E-02 | 6.62E-07 | 0.11% | 3.31E-12 | 0.10% |
| 7440-29-1 | Thorium-232 | 3.35E-10 | 1.68E-15 | 4.03E+00 | 1.35E-09 | 0.00% | 6.75E-15 | 0.00% |

**Table 15-6 Radionuclide Emissions and Individual and Total Effective Dose Equivalents for HLW Vitrification Emission Unit HV-S4**

| CAS Number | Radionuclide | Unabated Emission (Ci/yr) | Abated Emission (Ci/yr) | DCF (mrem/Ci) | Unabated Dose (mrem/yr) | Percent Contribution (%) | Abated Dose (mrem/yr) | Percent Contribution (%) |
|---|---|---|---|---|---|---|---|---|
| 13968-55-3 | Uranium-233 | 5.15E-10 | 2.57E-15 | 1.59E+00 | 8.18E-10 | 0.00% | 4.09E-15 | 0.00% |
| 13966-29-5 | Uranium-234 | 1.45E-09 | 7.23E-15 | 1.57E+00 | 2.27E-09 | 0.00% | 1.14E-14 | 0.00% |
| 15117-96-1 | Uranium-235 | 1.07E-10 | 5.37E-16 | 1.50E+00 | 1.61E-10 | 0.00% | 8.06E-16 | 0.00% |
| 13982-70-2 | Uranium-236 | 5.19E-11 | 2.59E-16 | 1.49E+00 | 7.73E-11 | 0.00% | 3.87E-16 | 0.00% |
| 7440-61-1 | Uranium-238 | 8.28E-10 | 4.14E-15 | 1.40E+00 | 1.16E-09 | 0.00% | 5.80E-15 | 0.00% |
| 10098-91-6 | Yttrium-90 | 5.72E-03 | 2.86E-08 | 1.80E-04 | 1.03E-06 | 0.17% | 5.15E-12 | 0.15% |
| 13967-48-1 | Ruthenium-106 | 5.55E-07 | 2.78E-12 | 8.15E-03 | 4.53E-09 | 0.00% | 2.26E-14 | 0.00% |
| 13967-70-9 | Cesium-134 | 6.46E-07 | 3.23E-12 | 5.56E-02 | 3.59E-08 | 0.01% | 1.80E-13 | 0.01% |
| 13981-97-0 | Barium-137m | 6.73E-04 | 3.37E-09 | 1.14E-12 | 7.67E-16 | 0.00% | 3.84E-21 | 0.00% |
| 13982-10-0 | Plutonium-242 | 2.14E-10 | 1.07E-15 | 3.99E+00 | 8.54E-10 | 0.00% | 4.27E-15 | 0.00% |
| 13982-63-3 | Radium-226 | 2.16E-11 | 1.08E-16 | 2.45E-01 | 5.28E-12 | 0.00% | 2.64E-17 | 0.00% |
| 14158-29-3 | Uranium-232 | 5.46E-09 | 2.73E-14 | 5.60E+00 | 3.06E-08 | 0.00% | 1.53E-13 | 0.00% |
| 14331-85-2 | Protactinium-231 | 2.40E-07 | 1.20E-12 | 5.85E+00 | 1.40E-06 | 0.23% | 7.01E-12 | 0.20% |
| 14336-70-0 | Nickel-59 | 3.15E-07 | 1.57E-12 | 1.70E-04 | 5.35E-11 | 0.00% | 2.67E-16 | 0.00% |
| 14952-40-0 | Actinium-227 | 1.09E-07 | 5.45E-13 | 7.48E+00 | 8.15E-07 | 0.13% | 4.08E-12 | 0.12% |
| 14993-75-0 | Americium-243 | 5.87E-09 | 2.94E-14 | 6.43E+00 | 3.77E-08 | 0.01% | 1.89E-13 | 0.01% |
| 15262-20-1 | Radium-228 | 2.26E-08 | 1.13E-13 | 1.03E-01 | 2.32E-09 | 0.00% | 1.16E-14 | 0.00% |
| 15510-73-3 | Curium-242 | 2.41E-08 | 1.20E-13 | 2.08E-01 | 5.01E-09 | 0.00% | 2.51E-14 | 0.00% |
| 15594-54-4 | Thorium-229 | 9.41E-10 | 4.70E-15 | 7.86E+00 | 7.39E-09 | 0.00% | 3.70E-14 | 0.00% |
| 15751-77-6 | Zirconium-93 | 7.75E-07 | 3.87E-12 | 6.62E-04 | 5.13E-10 | 0.00% | 2.56E-15 | 0.00% |
| 7440-03-1 | Niobium-93m | 6.98E-07 | 3.49E-12 | 1.12E-03 | 7.82E-10 | 0.00% | 3.91E-15 | 0.00% |
| no cas # | Cadmium-113m[3] | 2.33E-06 | 1.16E-11 | 0.00E+00 | 0.00E+00 | 0.00% | 0.00E+00 | 0.00% |

**Table 15-6 Radionuclide Emissions and Individual and Total Effective Dose Equivalents for HLW Vitrification Emission Unit HV-S4**

| CAS Number | Radionuclide | Unabated Emission (Ci/yr) | Abated Emission (Ci/yr) | DCF (mrem/Ci) | Unabated Dose (mrem/yr) | Percent Contribution (%) | Abated Dose (mrem/yr) | Percent Contribution (%) |
|---|---|---|---|---|---|---|---|---|
| no cas # | Selenium-79[3] | 1.60E-08 | 8.00E-14 | 0.00E+00 | 0.00E+00 | 0.00% | 0.00E+00 | 0.00% |
| | Total | 1.60E-02 | 2.27E-06 | na | 6.15E-04 | 100.00% | 3.45E-09 | 100.00% |

Notes:

a The unit dose conversion factor is used to calculate both unabated and abated individual doses.

b The CAP88-PC (EPA 1998) dose model does not currently accommodate these radionuclides; therefore, zero dose values are shown here. Based on emission rates, these radionuclides would have a minor impact on TEDE results.

**Table 15-7 Radionuclide Emissions and Individual and Total Effective Dose Equivalents for Pretreatment Building Ventilation Emission Unit PT-C2**

| Radionuclide | Emissions (Ci/yr) | | Unit DCF (mrem/Ci) | Selected Individual Dose (mrem/yr) | | | |
|---|---|---|---|---|---|---|---|
| | Unabated | Abated | | Unabated | Percent Contribution | Abated | Percent Contribution |
| Total α | 4.47E-09 | 2.23E-12 | 7.99E+00 | 3.57E-08 | 68% | 1.79E-11 | 68% |
| Total β/γ | 2.23E-07 | 1.12E-10 | 7.54E-02 | 1.68E-08 | 32% | 8.42E-12 | 32% |
| **Total** | **2.28E-07** | **1.14E-10** | **na** | **5.26E-08** | **100.00%** | **2.63E-11** | **100.00%** |

Note:
The unit dose conversion factor is used to calculate both unabated and abated individual doses.

**Table 15-8 Radionuclide Emissions and Individual and Total Effective Dose Equivalents for Pretreatment Building Ventilation Emission Unit PT-S1**

| Radionuclide | Emissions (Ci/yr) | | Unit DCF (mrem/Ci) | Selected Individual Dose (mrem/yr) | | | |
|---|---|---|---|---|---|---|---|
| | Unabated | Abated | | Unabated | Percent Contribution | Abated | Percent Contribution |
| Total α | 3.14E-08 | 1.57E-11 | 5.88E+00 | 1.85E-07 | 50% | 9.23E-09 | 99% |
| Total β/γ | 3.14E-06 | 1.57E-09 | 5.80E-02 | 1.82E-07 | 50% | 9.10E-11 | 1% |
| **Total** | **3.17E-06** | **1.58E-09** | **na** | **3.67E-07** | **100.00%** | **1.83E-10** | **100.00%** |

Note:
The unit dose conversion factor is used to calculate both unabated and abated individual doses.

**Table 15-9 Radionuclide Emissions and Individual and Total Effective Dose Equivalents for Pretreatment Building Ventilation Emission Unit PT-S2**

| Radionuclide | Emissions (Ci/yr) | | Unit DCF (mrem/Ci) | Selected Individual Dose (mrem/yr) | | | |
|---|---|---|---|---|---|---|---|
| | Unabated | Abated | | Unabated | Percent Contribution | Abated | Percent Contribution |
| Total α | 2.44E+01 | 1.22E-04 | 5.75E+00 | 1.40E+02 | 16% | 7.02E-04 | 16% |
| Total β | 1.09E+04 | 5.47E-02 | 5.69E-02 | 6.22E+02 | 69% | 3.11E-03 | 69% |
| Total γ | 9.91E+03 | 4.95E-02 | 1.34E-02 | 1.33E+02 | 15% | 6.64E-04 | 15% |
| **Total** | **2.09E+04** | **1.04E-01** | **na** | **8.95E+02** | **100.00%** | **4.48E-03** | **100.00%** |

Note:
The unit dose conversion factor is used to calculate both unabated and abated individual doses.

**Table 15-10 Radionuclide Emissions and Individual and Total Effective Dose Equivalents for LAW Building Ventilation Emission Unit LV-C2**

| Radionuclide | Emissions (Ci/yr) | | Unit DCF (mrem/Ci) | Selected Individual Dose (mrem/yr) | | | |
|---|---|---|---|---|---|---|---|
| | Unabated | Abated | | Unabated | Percent Contribution | Abated | Percent Contribution |
| Total α | 1.95E-09 | 9.75E-13 | 1.03E+01 | 2.01E-08 | 69% | 1.00E-11 | 69% |
| Total β/γ | 9.75E-08 | 4.88E-11 | 9.45E-02 | 9.22E-09 | 31% | 4.61E-12 | 31% |
| **Total** | **9.95E-08** | **4.97E-11** | **na** | **2.93E-08** | **100.00%** | **1.47E-11** | **100.00%** |

Note:
The unit dose conversion factor is used to calculate both unabated and abated individual doses.

Table 15-11 Radionuclide Emissions and Individual and Total Effective Dose Equivalents for LAW Building Ventilation Emission Unit LV-S1

| Radionuclide | Emissions (Ci/yr) | | Unit DCF (mrem/Ci) | Selected Individual Dose (mrem/yr) | | | |
|---|---|---|---|---|---|---|---|
| | Unabated | Abated | | Unabated | Percent Contribution | Abated | Percent Contribution |
| Total α | 1.28E-05 | 6.38E-09 | 5.88E+00 | 7.51E-05 | 50% | 3.75E-08 | 50% |
| Total β/γ | 1.29E-03 | 6.44E-07 | 5.80E-02 | 7.48E-05 | 50% | 3.74E-08 | 50% |
| **Total** | **1.30E-03** | **6.51E-07** | **na** | **1.50E-04** | **100.00%** | **7.49E-08** | **100.00%** |

Note:
The unit dose conversion factor is used to calculate both unabated and abated individual doses.

**Table 15-12 Radionuclide Emissions and Individual and Total Effective Dose Equivalents for LAW Building Ventilation Emission Unit LV-S2**

| Radionuclide | Emissions (Ci/yr) | | Unit DCF (mrem/Ci) | Selected Individual Dose (mrem/yr) | | | |
|---|---|---|---|---|---|---|---|
| | Unabated | Abated | | Unabated | Percent Contribution | Abated | Percent Contribution |
| Total α | 3.89E-02 | 1.94E-07 | 5.83E+00 | 2.29E-01 | 54% | 1.14E-06 | 54% |
| Total β | 3.38E+00 | 1.69E-05 | 5.75E-02 | 1.96E-01 | 46% | 9.81E-07 | 46% |
| Total γ | 1.49E-01 | 7.43E-07 | 1.36E-02 | 2.04E-03 | <1% | 1.02E-08 | <1% |
| **Total** | **3.57E+00** | **1.78E-05** | **na** | **4.27E-01** | **100.00%** | **2.13E-06** | **100.00%** |

Note:
The unit dose conversion factor is used to calculate both unabated and abated individual doses.

**Table 15-13 Radionuclide Emissions and Individual and Total Effective Dose Equivalents for LAW Building Ventilation Emission Unit ILAW-C2 Canister Storage**

| Radionuclide | Emissions (Ci/yr) | | Unit DCF (mrem/Ci) | Selected Individual Dose (mrem/yr) | | | |
|---|---|---|---|---|---|---|---|
| | Unabated | Abated | | Unabated | Percent Contribution | Abated | Percent Contribution |
| Total α | 2.39E-07 | 2.39E-07 | 1.03E+01 | 2.46E-06 | 92% | 2.46E-06 | 92% |
| Total β/γ | 2.39E-06 | 2.39E-06 | 9.45E-02 | 2.26E-07 | 8% | 2.26E-07 | 8% |
| **Total** | **2.63E-06** | **2.63E-06** | **na** | **2.68E-06** | **100.00%** | **2.68E-06** | **100.00%** |

Note:
The unit dose conversion factor is used to calculate both unabated and abated individual doses.

**Table 15-14 Radionuclide Emissions and Individual and Total Effective Dose Equivalents for HLW Building Ventilation Emission Unit HV-C2**

| Radionuclide | Emissions (Ci/yr) | | Unit DCF (mrem/Ci) | Selected Individual Dose (mrem/yr) | | | |
|---|---|---|---|---|---|---|---|
| | Unabated | Abated | | Unabated | Percent Contribution | Abated | Percent Contribution |
| Total α | 3.14E-09 | 1.57E-12 | 8.71E+00 | 2.74E-08 | 68% | 1.37E-11 | 68% |
| Total β/γ | 1.57E-07 | 7.86E-11 | 8.13E-02 | 1.28E-08 | 32% | 6.39E-12 | 32% |
| **Total** | **1.60E-07** | **8.02E-11** | **na** | **4.02E-08** | **100.00%** | **2.01E-11** | **100.00%** |

Note:
The unit dose conversion factor is used to calculate both unabated and abated individual doses.

**Table 15-15 Radionuclide Emissions and Individual and Total Effective Dose Equivalents for HLW Building Ventilation Emission Unit HV-C2R**

| Radionuclide | Emissions (Ci/yr) | | Unit DCF (mrem/Ci) | Selected Individual Dose (mrem/yr) | | | |
|---|---|---|---|---|---|---|---|
| | Unabated | Abated | | Unabated | Percent Contribution | Abated | Percent Contribution |
| Total α | 1.27E-10 | 6.35E-14 | 8.71E+00 | 1.11E-09 | 68% | 5.53E-13 | 68% |
| Total β/γ | 6.35E-09 | 3.18E-12 | 8.13E-02 | 5.16E-10 | 32% | 2.58E-13 | 32% |
| **Total** | **6.48E-09** | **9.53E-12** | **na** | **1.63E-09** | **100.00%** | **8.11E-13** | **100.00%** |

Note:
The unit dose conversion factor is used to calculate both unabated and abated individual doses.

**Table 15-16 Radionuclide Emissions and Individual and Total Effective Dose Equivalents for HLW Building Ventilation Emission Unit HV-S1**

| Radionuclide | Emissions (Ci/yr) | | Unit DCF (mrem/Ci) | Selected Individual Dose (mrem/yr) | | | |
|---|---|---|---|---|---|---|---|
| | Unabated | Abated | | Unabated | Percent Contribution | Abated | Percent Contribution |
| Total α | 1.80E-06 | 8.99E-10 | 5.83E+00 | 1.05E-05 | 73% | 5.24E-09 | 73% |
| Total β/γ | 6.85E-05 | 3.43E-08 | 5.75E-02 | 3.94E-06 | 27% | 1.97E-09 | 27% |
| **Total** | **7.03E-05** | **3.52E-08** | **na** | **1.44E-05** | **100.00%** | **7.21E-09** | **100.00%** |

Note:
The unit dose conversion factor is used to calculate both unabated and abated individual doses.

**Table 15-17 Radionuclide Emissions and Individual and Total Effective Dose Equivalents for HLW Building Ventilation Emission Unit HV-S2**

| Radionuclide | Emissions (Ci/yr) | | Unit DCF (mrem/Ci) | Selected Individual Dose (mrem/yr) | | | |
|---|---|---|---|---|---|---|---|
| | Unabated | Abated | | Unabated | Percent Contribution | Abated | Percent Contribution |
| Total α | 5.74E+00 | 2.87E-05 | 5.83E+00 | 3.35E+01 | 33% | 1.67E-04 | 33% |
| Total β | 1.12E+03 | 5.59E-03 | 5.75E-02 | 6.43E+01 | 64% | 3.21E-04 | 64% |
| Total γ | 2.39E+02 | 1.20E-03 | 1.36E-02 | 3.26E+00 | 3% | 1.63E-05 | 3% |
| **Total** | **1.36E+03** | **6.82E-03** | **na** | **1.01E+02** | **100.00%** | **5.05E-04** | **100.00%** |

Note:
The unit dose conversion factor is used to calculate both unabated and abated individual doses.

**Table 15-18 Radionuclide Emissions and Individual and Total Effective Dose Equivalents for HLW Building Ventilation Emission Unit IHLW-S1 Canister Storage**

| Radionuclide | Emissions (Ci/yr) | | Unit DCF (mrem/Ci) | Selected Individual Dose (mrem/yr) | | | |
|---|---|---|---|---|---|---|---|
| | Unabated | Abated | | Unabated | Percent Contribution | Abated | Percent Contribution |
| Total α | 2.68E-07 | 2.68E-07 | 5.83E+00 | 1.56E-06 | 90% | 1.56E-06 | 90% |
| Total β/γ | 2.95E-06 | 2.95E-06 | 5.75E-02 | 1.69E-07 | 10% | 1.69E-07 | 10% |
| **Total** | **3.22E-06** | **3.22E-06** | **na** | **1.73E-06** | **100.00%** | **1.73E-06** | **100.00%** |

Note:
The unit dose conversion factor is used to calculate both unabated and abated individual doses.

**Table 15-19 Radionuclide Emissions and Individual and Total Effective Dose Equivalents for Laboratory Stack Emission Unit LB-C2**

| Radionuclide | Emissions (Ci/yr) | | Unit DCF (mrem/Ci) | Selected Individual Dose (mrem/yr) | | | |
|---|---|---|---|---|---|---|---|
| | Unabated | Abated | | Unabated | Percent Contribution | Abated | Percent Contribution |
| Total α | 4.03E-04 | 2.02E-07 | 1.03E+01 | 4.15E-03 | 28% | 2.08E-06 | 28% |
| Total β | 1.08E-01 | 5.38E-05 | 9.45E-02 | 1.02E-02 | 68% | 5.08E-06 | 68% |
| Total γ | 2.85E-02 | 1.43E-05 | 2.23E-02 | 6.36E-04 | 4% | 3.19E-07 | 4% |
| **Total** | **1.37E-01** | **6.83E-05** | **na** | **1.50E-02** | **100.00%** | **7.48E-06** | **100.00%** |

Note:
The unit dose conversion factor is used to calculate both unabated and abated individual doses.

**Table 15-20 Radionuclide Emissions and Individual and Total Effective Dose Equivalents for Laboratory Stack Emission Unit LB-S1**

| Radionuclide | Emissions (Ci/yr) | | Unit DCF | Selected Individual Dose (mrem/yr) | | | |
|---|---|---|---|---|---|---|---|
| | Unabated | Abated | (mrem/Ci) | Unabated | Percent Contribution | Abated | Percent Contribution |
| Total α | 4.03E-04 | 2.02E-07 | 9.68E+00 | 3.90E-03 | 28% | 1.96E-06 | 28% |
| Total β | 1.08E-01 | 5.38E-05 | 8.93E-02 | 9.64E-03 | 68% | 4.80E-06 | 68% |
| Total γ | 2.85E-02 | 1.43E-05 | 2.11E-02 | 6.01E-04 | 4% | 3.02E-07 | 4% |
| **Total** | **1.37E-01** | **6.83E-05** | **na** | **1.41E-02** | **100.00%** | **7.06E-06** | **100.00%** |

Note:
The unit dose conversion factor is used to calculate both unabated and abated individual doses.

**Table 15-21 Radionuclide Emissions and Individual and Total Effective Dose Equivalents for Laboratory Stack Emission Unit LB-S2**

| Radionuclide | Emissions (Ci/yr) | | Unit DCF (mrem/Ci) | Selected Individual Dose (mrem/yr) | | | |
|---|---|---|---|---|---|---|---|
| | Unabated | Abated | | Unabated | Percent Contribution | Abated | Percent Contribution |
| Total α | 3.63E-03 | 1.81E-08 | 1.08E+01 | 3.92E-02 | 28% | 1.95E-07 | 28% |
| Total β | 9.69E-01 | 4.84E-06 | 9.85E-02 | 9.54E-02 | 68% | 4.77E-07 | 68% |
| Total γ | 2.57E-01 | 1.28E-06 | 2.32E-02 | 5.96E-03 | 4% | 2.97E-08 | 4% |
| **Total** | **1.23E+00** | **6.14E-06** | **na** | **1.41E-01** | **100.00%** | **7.02E-07** | **100.00%** |

Note:
The unit dose conversion factor is used to calculate both unabated and abated individual doses.

**Figure 15-1** Wind Rose and Wind Speed Histogram for the Hanford Stability Array (STAR) Meteorological Data Set, 200 East Area

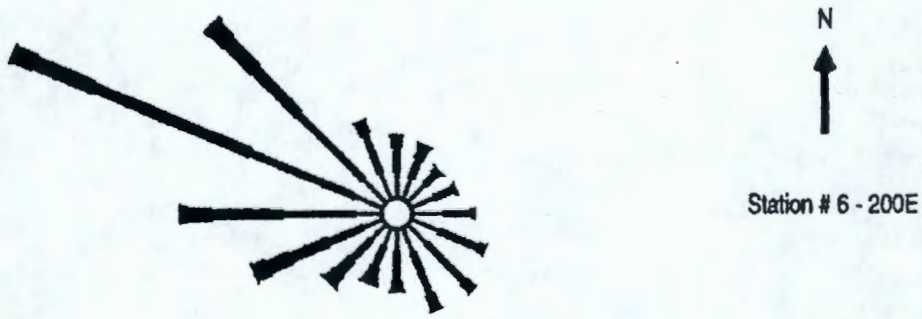


(a) Wind Rose

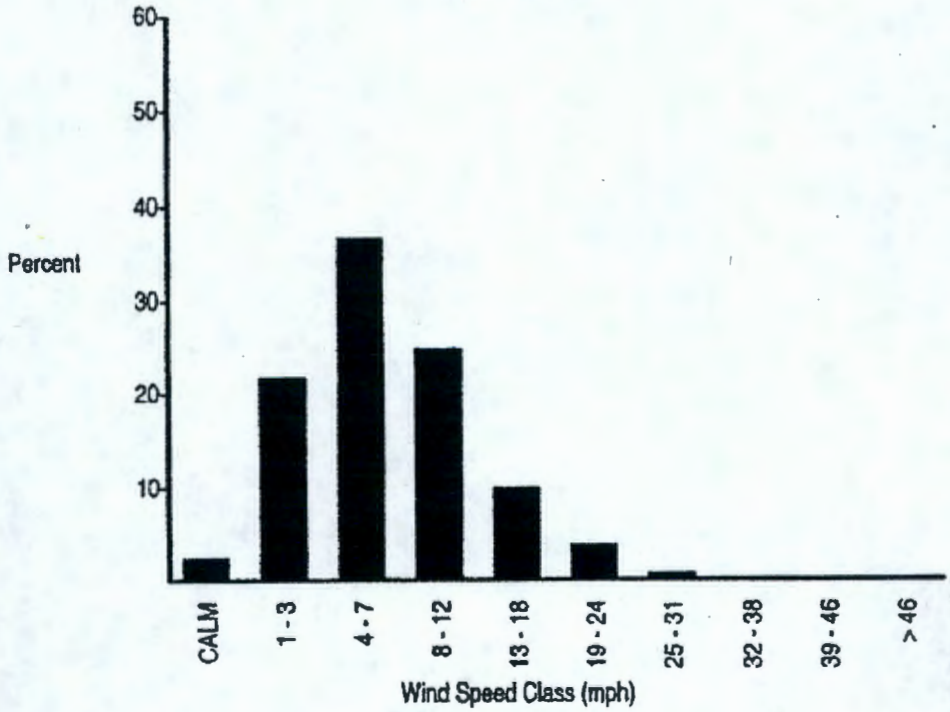


(b) Wind Speed Histogram

## Contents

16 Cost Factors of Control Technology Components.....16-1

# 16 Cost Factors of Control Technology Components

Please see *Radioactive Air Emissions Notice of Construction Permit Application for the River Protection Project – Waste Treatment Plant* (24590-WTP-RPT-ENV-01-008, Rev 1).

# Contents

17 Duration or Lifetime ..... 17-1

# 17 Duration or Lifetime

Please see *Radioactive Air Emissions Notice of Construction Permit Application for the River Protection Project - Waste Treatment Plant* (24590-WTP-RPT-ENV-01-008, Rev 1).

# Contents

18 Standards ..... 18-1

# 18 Standards

The WTP compliance strategy for all emission units with a potential to emit radionuclides is to design, procure, and install components and systems in compliance with applicable standards. The WTP design and testing code compliance strategy is documented in the following reports:

- *WDOH Code Compliance Matrix for PTF HVAC Systems* (24590-PTF-RPT-ENG-02-002, Rev A)
- *WDOH Code Compliance Matrix for LAW HVAC Systems* (24590-LAW-RPT-ENG-02-001, Rev A)
- *WDOH Code Compliance Matrix for HLW HVAC Systems* (24590-HLW-RPT-ENG-02-003, Rev A)
- *WDOH Code Compliance Matrix for LAB HVAC Systems* (24590-LAB-RPT-ENG-02-001, Rev A)
- *Washington State Department of Health Code Compliance Matrices for the Waste Treatment Plant Process Gas Treatment Systems* (24590-WTP-RPT-ENG-02-015, Rev B)

Where a deviation to the standard is identified, Washington State Department of Health approval of the deviation will be requested and obtained prior to "hot" (radioactive) operation of the system or component.

Compliance with procedures and specifications for effluent monitoring and instrumentation specified in ANSI N13.1 (ANSI 1999) is discussed in section 9 of this submittal.

# Contents

19 References ..... 19-1
19.1 Codes and Standards ..... 19-1
19.2 Project Documents ..... 19-1
19.3 Other Documents ..... 19-2

# 19 References

## 19.1 Codes and Standards

10 CFR 1021. *National Environmental Policy Act Implementing Procedures*, as amended.

40 CFR 60. Appendix A, Test Method 1, *Sample and Velocity Traverses for Stationary Sources*, Code of Federal Regulations, as amended.

40 CFR 61. *National Emission Standards for Hazardous Air Pollutants*, Code of Federal Regulations, as amended.

ANSI. 1999. *Sampling and Monitoring Releases of Airborne Radioactive Substances from the Stacks and Ducts of Nuclear Facilities*, ANSI N13.1, 1999. American National Standards Institute, New York, New York, USA.

ASME. 1989. *Quality Assurance Program Requirements for Nuclear Facilities*, ASME/ANSI NQA-1, 1989. American Society of Mechanical Engineers International, New York, New York, USA.

ASME. 1995. *Testing of Nuclear Air Treatment Systems*, ASME/ANSI N510, 1995. American Society of Mechanical Engineers International, New York, New York, USA.

ASME. 1996. *Nuclear Power Plant Air-Cleaning Units and Components*, ASME/ANSI N509, 1996. American Society of Mechanical Engineers International, New York, New York, USA.

ASME. 1997. *Code on Nuclear Air and Gas Treatment*, ASME/ANSI AG-1, 1997. American Society of Mechanical Engineers International, New York, New York, USA.

RCW 43.21C. *State Environmental Policy Act*, Revised Code of Washington, as amended.

WAC 197-11. *State Environmental Policy Act Rules*, Washington Administrative Code, as amended.

WAC 246-247. *Radiation Protection-Air Emissions*, Washington Administrative Code, as amended.

## 19.2 Project Documents

24590-WTP-DWPA-01-001, Rev 1, *WTP Dangerous Waste Permit Application.*

24590-WTP-RPP-NS-01-001, Rev 1, *Criticality Evaluation Safety Report for the RPP-WTP.*

24590-WTP-RPT-ENV-01-004, Rev 0, *Best Available Radionuclide Control Technology Analysis for the WTP.*

24590-WTP-RPT-ENV-01-008, Rev 1, *Radioactive Air Emissions Notice of Construction Permit Application for the River Protection Project - Waste Treatment Plant.*

24590-PTF-RPT-ENG-02-002, Rev A, *WDOH Code Compliance Matrix for PTF HVAC Systems.*

24590-LAW-RPT-ENG-02-001, Rev A, *WDOH Code Compliance Matrix for LAW HVAC Systems.*

24590-HLW-RPT-ENG-02-003, Rev A, *WDOH Code Compliance Matrix for HLW HVAC Systems.*

24590-LAB-RPT-ENG-02-001, Rev A, *WDOH Code Compliance Matrix for LAB HVAC Systems.*

24590-WTP-RPT-ENG-02-015, Rev B, *Washington State Department of Health Code Compliance Matrices for the Waste Treatment Plant Process Gas Treatment Systems.*

Berrios. 2001. *Emissions Model Validation for Permit Applications*, CCN 022835, Meeting Minutes, 7 September 2001.

RPT-W375-ES00001, Rev 1, *Integrated Emissions Baseline Report for the River Protection Project-Waste Treatment Plant.*

24590-WTP-MRQ-PT-03-002, Rev 0, *Emissions Maximum Case Runs with Updated Parameters.*

## 19.3 Other Documents

Conklin. 2001. Letter from Conklin AW, State of Washington Department of Health, Division of Radiation Protection, to Hebdon J, US Department of Energy, Regulatory Compliance and Analysis Division, AIR 01-308, 29 March 2001.

EPA. 1998. *Clean Air Act Assessment Package - Personal Computer*, CAP88-PC, Version 2.0, 1998, Radiation Risk Assessment, US Environmental Protection Agency, Washington, DC, USA.