START

0033084

SEP 15 1992

# ENGINEERING DATA TRANSMITTAL

(14)

Page 1 of 1

1. EDT 152998

Sta. 21

| 2. To: (Receiving Organization) | 3. From: (Originating Organization) | 4. Related EDT No.: |
|---|---|---|
| Tank Farm Environmental Engineering (77300) | Waste Tank/Systems Integrity Assessments | N/A |
| 5. Proj./Prog./Dept./Div.: WTSO&R 70000/77300 | 6. Cog. Engr.: W. J. Karwoski | 7. Purchase Order No.: N/A |
| 8. Originator Remarks: Release of WHC-SD-WM-ER-126 Rev 0 | | 9. Equip./Component No.: N/A |
| | | 10. System/Bldg./Facility: 241-AW Tank Farm |
| 11. Receiver Remarks: | | 12. Major Assm. Dwg. No.: N/A |
| | | 13. Permit/Permit Application No.: N/A |
| | | 14. Required Response Date: N/A |

DEC 1993 RECEIVED EPIC

9413147.0010

15. DATA TRANSMITTED

| (A) Item No. | (B) Document/Drawing No. | (C) Sheet No. | (D) Rev. No. | (E) Title or Description of Data Transmitted | (F) Impact Level | (G) Reason for Transmittal | (H) Originator Disposition | (I) Receiver Disposition |
|---|---|---|---|---|---|---|---|---|
| 1 | WHC-SD-WM-ER-126 | | 0 | Structural Integrity Evaluation of 241-AW Tank Farm Dangerous Waste Storage Tank Facilities | 2 ESQ WJK 7/20/92 | 2 | 1 | |
| | | | | | | | | |
| | | | | | | | | |
| | | | | | | | | |

16. KEY

| Impact Level (F) | Reason for Transmittal (G) | Disposition (H) & (I) |
|---|---|---|
| 1, 2, 3, or 4 (see MRP 5.43) | 1. Approval 2. Release 3. Information 4. Review 5. Post-Review 6. Dist. (Receipt Acknow. Required) | 1. Approved 2. Approved w/comment 3. Disapproved w/comment 4. Reviewed no/comment 5. Reviewed w/comment 6. Receipt acknowledged |

17. SIGNATURE/DISTRIBUTION (See Impact Level for required signatures)

| (G) Reason | (H) Disp. | (J) Name | (K) Signature | (L) Date | (M) MSIN | (J) Name | (K) Signature | (L) Date | (M) MSIN | (G) Reason | (H) Disp. |
|---|---|---|---|---|---|---|---|---|---|---|---|
| 4 | 1 | Cog.Eng. W. J. Karwoski | WJKarwoski | 7/9/92 | H5-53 | | | | | | |
| 4 | 1 | Cog. Mgr. K. V. Scott | KVScott | 7/9/92 | H5-52 | | | | | | |
| 4 | 1 | QA D. C. Board | Hyamanda | 7/16/92 | S1-57 | | | | | | |
| 4 | 1 | Safety M. N. Islam | TJMartin | 7-16-92 | R3-08 | | | | | | |
| ~~4~~ | ~~1~~ | ~~Env. B. G. Erlandson~~ | WJK | 7/20/92 | B2-19 | | | | | | |
| 4 | 1 | TFEE Mgr. G. T. Berlin | GTB | 8/15/92 | R1-62 | | | | | | |
| 4 | 1 | ESA Mgr. R. B. Pan | R.B.P. | 7/9/92 | H5-53 | | | | | | |

| 18. | 19. | 20. | 21. DOE APPROVAL (if required) |
|---|---|---|---|
| WJKarwoski 7/9/92 W. J. Karwoski | WJK 8/11/92 ~~G. T. Berlin~~ M.A. McLaughlin M.A. McLAUGHLIN | KVScott K. V. Scott | Ltr. No. |
| Signature of EDT Originator / Date | Authorized Representative for Receiving Organization / Date | Cognizant/Project Engineer's Manager / Date 8/27/92 | ☐ Approved ☐ Approved w/comments ☐ Disapproved w/comments |

BD-7400-172-2 (07/89) (EF) GEF097

BD-7400-172-1 (02/8

# SUPPORTING DOCUMENT

1. Total Pages 114

2. Title

Structural Integrity Evaluation of AW Tank Farm Dangerous Waste Storage Tank Facilities

3. Number

WHC-SD-WM-ER-126

4. Rev No.

0

5. Key Words

241-AW Tank Farm
241-AW Double Shell Tanks
241-AW Waste Transfer Piping
WAC-173-303-640 (2)

APPROVED FOR PUBLIC RELEASE

9/14/92 DSolis

6. Author


Name: W. J. Karwoski

W J Karwoski
Signature

Organization/Charge Code Equipment Stress Analysis/23480/N131N


7. Abstract


The report objective is to evaluate the structural integrity of AW Tank Farm facilities to determine if the facilities will collapse, rupture or fail from structural fault under normal operating conditions and, therefore, not satisfy WAC-173-303-640(2) regulations. The report emphasized the six double-shell tanks' design, construction and operation. The Tank Farm structural integrity is evaluated based on a review of historical reports for the facility design, construction, and operation. Important principal national design and construction codes and design criteria or portions thereof are compared with revised codes and criteria to determine if the principal design parameter values and methods have changed.



8. PURPOSE AND USE OF DOCUMENT - This document was prepared for use within the U.S. Department of Energy and its contractors. It is to be used only to perform, direct, or integrate work under U.S. Department of Energy contracts. This document is not approved for public release until reviewed.

PATENT STATUS - This document copy, since it is transmitted in advance of patent clearance, is made available in confidence solely for use in performance of work under contracts with the U.S. Department of Energy. This document is not to be published nor its contents otherwise disseminated or used for purposes other than specified above before patent approval for such release or use has been secured, upon request, from the U.S. Department of Energy, Patent Attorney, Richland Operations Office, Richland, WA.

DISCLAIMER - This report was prepared as an account of work sponsored by an agency of the United States Government. Neither the United States Government nor any agency thereof, nor any of their employees, nor any of their contractors, subcontractors or their employees, makes any warranty, express or implied, or assumes any legal liability or responsibility for the accuracy, completeness, or any third party's use or the results of such use of any information, apparatus, product, or process disclosed, or represents that its use would not infringe privately owned rights. Reference herein to any specific commercial product, process, or service by trade name, trademark, manufacturer, or otherwise, does not necessarily constitute or imply its endorsement, recommendation, or favoring by the United States Government or any agency thereof or its contractors or subcontractors. The views and opinions of authors expressed herein do not necessarily state or reflect those of the United States Government or any agency thereof.


RELEASE STAMP

OFFICIAL RELEASE BY WHC (14)
DATE SEP 15 1992
Sta. 21

9. Impact Level 2 ESQ

WJK 7/20/92



9413147.0011

9413147.0012

# STRUCTURAL INTEGRITY EVALUATION

# OF

# 241-AW TANK FARM

# DANGEROUS WASTE STORAGE

# TANK FACILITIES

Prepared By: W. J. Karwoski 7/9/92
W. J. Karwoski, Principal Engineer
Equipment Stress Analysis

Reviewed By: Ruben Mendoza 7-9-92
R. E. Mendoza, Engineer
Equipment Stress Analysis

Approved By: R. B. Pan 7/9/92
R. B. Pan, Manager
Equipment Stress Analysis

Approved By: K V Scott 7/9/92
K. V. Scott, Manager
Waste Tank/Systems Integrity Assessments

# DESIGN VERIFICATION METHOD

The need for design verification has been reviewed with the method selected as indicated below: (WP #23480-81).

| | |
|---|---|
| x | Independent Review |
| | Alternate Calculations |
| | Qualification Testing |
| | Formal Design Review |

R. B. Pan
Cognizant/Project/Design Manager

SD #WHC-SD-WM-ER-126

ECN # N/A

DWG(S) # N/A

9413147.0013

# CHECKLIST FOR INDEPENDENT REVIEW

Document Reviewed STRUCTURAL INTEGRITY ASSESSMENT OF 241-AW TANK FARM DANGEROUS WASTE STORAGE TANK FACILITIES

Author W. J. Karwoski

| Yes | No | N/A | |
|---|---|---|---|
| [✓] | [ ] | [ ] | Problem completely defined. |
| [✓] | [ ] | [ ] | Necessary assumptions explicitly stated and supported. |
| [ ] | [ ] | [✓] | Are computer analysis applications documented in the report per EP 2.1? (Code, version, hardware, input, output files) |
| [ ] | [ ] | [✓] | Is the software verification documentation either referenced or included in the report? |
| [ ] | [ ] | [✓] | Computer code error reports reviewed for impact, if any. |
| [ ] | [ ] | [✓] | Data used in calculations explicitly stated in document. |
| [✓] | [ ] | [ ] | Data checked for consistency with original source information as applicable. |
| [ ] | [ ] | [✓] | Mathematical derivations checked, including dimensional consistency of results. |
| [ ] | [ ] | [✓] | Models appropriate and used within range of validity or use outside range of established validity justified. |
| [ ] | [ ] | [✓] | Hand calculations checked for errors. |
| [ ] | [ ] | [✓] | Code run streams correct and consistent with analysis documentation. |
| [ ] | [ ] | [✓] | Acceptability limits on analytical results applicable and supported. Limits checked against sources. |
| [✓] | [ ] | [ ] | Safety margins consistent with good engineering practices. |
| [✓] | [ ] | [ ] | Conclusions consistent with analytical results and applicable limits. |
| [✓] | [ ] | [ ] | Results and conclusions address all points required in the problem statement. |

Ruben Mendoza 7-9-92

R. E. Mendoza, Reviewer Date

Rev. 1 9/90

CONTENTS

PAGE

1.0 PURPOSE . . . . . 1

2.0 OBJECTIVE . . . . . 1

3.0 SCOPE . . . . . 1

4.0 INTRODUCTION . . . . . 4

5.0 BACKGROUND . . . . . 6
5.1 DESIGN, CONSTRUCTION AND OPERATION . . . . . 6
5.1.1 Design . . . . . 6
5.1.2 Construction . . . . . 9
5.1.3 Operation. . . . . 9
5.1.4 Other Considerations . . . . . 10

6.0 ANALYSES . . . . . 11
6.1 PRE- AND POST-CONSTRUCTION DESIGN ANALYSIS OF DSTS (ITEMS 1 THROUGH 6) . . . . . 11
6.2 241-AW CLEAN-OUT BOXES (COBS) 1-12 ANALYSES (ITEM 7) . . . . . 15
6.3 PROCESS PIPING AND DRAIN LINE ANALYSES (ITEMS 8, 9, 10, 11) . 15
6.4 241-AW 101-106 CENTRAL, ANNULUS, DRAIN AND FEED PUMP PITS (ITEM 12) . . . . . 16
6.5 THREE-IN. DRAIN LINES (ITEMS 13, 14, 15, 16) . . . . . 17

7.0 DISCUSSION OF DESIGN STANDARDS . . . . . 18

8.0 CONCLUSIONS . . . . . 21

9.0 REFERENCES . . . . . 22

10.0 TABLES . . . . . 26

APPENDICES

A OVERVIEW OF TANK DESIGN CODE . . . . . A-1

B REPORT ON STRESS ANALYSIS OF 241-AW TANK FARM PIPING AS FOUND IN THE B-120 PROJECT RECORDS . . . . . B-1

C M-24 PIPE CODE FOR B 120 PROJECT . . . . . C-1

TABLES

1 Summary of Bases for Tank Design Criteria . . . . . 27

2 Design Requirements Versus Applicable Design Standard or Code . . . . . 30

3 Operational Specifications and Standards - Underground Storage Tanks . . . . . 35



9413147.0015

This page intentionally left blank.

9413147.0016

# STRUCTURAL INTEGRITY EVALUATION OF AW TANK FARM DANGEROUS WASTE STORAGE TANK FACILITIES

## 1.0 PURPOSE

This report provides a structural integrity evaluation of AW Tank Farm dangerous waste storage tank facilities in support of the Integrity Assessment Report that is required by WAC 173-303-640(2). The Integrity Assessment Report will bring together (with the results of this report) the results of investigations on waste characteristics, corrosion protection, tank system age, tank system inspections, and leak tests.

9413147.0017

## 2.0 OBJECTIVE

The objective of this report is to evaluate the structural integrity of the AW Tank Farm dangerous waste storage tank facilities with respect to the codes and standards used to design, construct, and operate the tank system. The structural integrity of the tank facilities ensures that the tank system will not collapse, rupture, or fail from structural fault or lack of strength under normal operating conditions.

## 3.0 SCOPE

The structural integrity evaluation is performed on the principal structural components of the tank system that are judged to be compliant with WAC 173-303-640(2)(WHC-SD-WM-WP-057).

1. Tank 241-AW-101
2. Tank 241-AW-102
3. Tank 241-AW-103
4. Tank 241-AW-104
5. Tank 241-AW-105
6. Tank 241-AW-106

7. 241-AW Clean-Out Boxes (COBs) 1-12 and 30
8. Slurry Lines 162 through 169 (161 is out of service), 509 and 510
9. Supernatant Lines 219, 220, 261-272, 274, 609, 610, V-021, V-022 and V-023
10. Drain Lines 334, 335, 361, and 369
11. Process Waste Lines 471-476
12. 241-AW 101-106 Central, Annulus, Drain and Feed Pump Pits
13. 3-in. Drains to Central Pump Pits 01A, 02A, 03A, 04A, 05A, 06A
14. 3-in. Drains to Annulus Pump Pits 01B, 02B, 03B, 04B, 05B, 06B
15. 3-in. Drains to Feed Pump Pit 02E
16. 3-in. Drain to Drain Pit 02D

The description of the structural components for the reference tank system, previously listed items 1-16, is given in the Integrity Assessment Plan for AW Tank Farm (WHC-SD-WM-WP-057) and in the Facility Description Manual for 241-AW Tank Farm (FDM-T-200-00001, Rev. 8). The tank system's structural integrity is evaluated through an investigative review of the documents of record (admissible records) controlling the design, procurement, construction, operation, and supporting analyses of the tank system structural components. The principal areas of investigation are:

- Design Criteria
- Design Specifications
- Procurement Specifications
- Construction Specifications
- Design Analysis
- Operational Specifications and Tank System Performance History
- Current Design Practices.

Emphasis is given to evaluating the structural integrity of the double-shell waste storage tanks.[1]

9413147.0019

[1]Double-shell AW Farm radioactive waste storage tanks are fabricated as three concentric tanks. The free-standing primary tank contains the waste material. The secondary tank, five feet larger in diameter than the primary tank, creates a surrounding space called the annulus. The completely enclosed annulus serves as a containment barrier if the primary tank should leak. The annulus is ventilated and constantly monitored for evidence of primary tank leakage. The third tank is a concrete shell that encloses both primary and secondary tanks.

9413147.0020

# 4.0 INTRODUCTION

The investigative process is based on reviewing documents that contain information pertinent to the structural integrity of the AW Tank Farm. References to support the structural integrity evaluation are obtained from several sources.

Records Holding Area--The Records Holding Area maintains quality assurance documents of completed projects. Documents for the design, procurement, construction, and some of the post construction analyses for AW Tank Farm, Project B-120, are held in the Records Holding Area files.

Central Files--Central Files maintains all documents cleared for release or distribution internally, externally, and sponsor-limited. Some documents for B-120 project (AW Tank Farm) design analysis, construction, and post construction analyses are held in Central Files.

Tank Farms Surveillance Analysis and Support (TFSAS)--TFSAS maintains operating records for the tank farms. The operating records consist of measurements of operating parameters, operating specifications and standards, operating variances, "off-normal" reports, and change notices. In general, TFSAS maintains a quantitative and descriptive chronological history of operations at the AW Tank Farm.

Other sources of data include:

- Contractor/Vendor Information Files
- Waste Information Data System
- Environmental Data Management Center
- Pacific Northwest Laboratory Library
- Engineering Drawing Files.

The Tank Farms Information Center (TFIC) is used to interrogate those data, reference, or document sources by direct reference or keyword title searches. By that means, historical documents were retrieved.

In the following report, first the design criteria and construction specifications for the AW Tank Farm are presented. Administrative controls and operating history of the farm are also reviewed. Compliance to the design criteria by specifications, national codes or standards and studies,

and operational limits are shown in tables. Second, whatever structural analyses could be found are cited and discussed for each of the facilities within the scope of this report. Third, the effect of design code and criteria revisions is discussed for the key parameters controlling the AW facility design. Last, the conclusions are presented.

9413147.0021

# 5.0 BACKGROUND

Design of the 241-AW tank farm was started in February, 1976 and completed in April, 1977. Construction activity was started in March, 1976 and completed in August, 1979. Operational testing of all mechanical and instrument systems was completed and the tanks put in operation in July, 1980.

## 5.1 DESIGN, CONSTRUCTION AND OPERATION

### 5.1.1 Design

Design of AW tank farm facilities was performed based on preliminary conceptual design report (ARH-CD-177), functional design criteria (ARH-CD-362), and a conceptual design report (ARH-CD-377). The functional design criteria (FDC) document cited the regulations, codes, and standards to which the facility must be designed and constructed. In general, the FDC cited through reference the latest edition of Occupational Safety and Health Standards, and "national consensus" codes and standards as developed by American Society of Mechanical Engineering, American Concrete Institute, American National Standards Institute, and the Institute of Electrical and Electronic Engineers. As in 1975, that practice has been and is continued in FDCs today. The FDC also gave the principal design criteria. The storage tank design criteria are given in Table 1. By designing the tank system to those criteria, structural compatibility with the stored waste is ensured.

The conceptual design report was followed by the design, procurement, and construction specifications.

The principal documents that controlled the design, procurement, and construction of the tank farm facilities were the following:

- B-120-C1, Construction Specification For the 241-AW Tank Farm Site Preparation
- B-120-C2, Construction Specification For the 241-AW Tank Farm Excavation
- B-120-C3, Construction Specification For the 241-AW Tank Farm Foundations
- B-120-C4, Construction Specification For the 241-AW Tank Farm Primary and Secondary Steel Tanks
- B-120-C5, Construction Specification For the 241-AW Tank Farm Concrete Tank Shells
- B-120-C6, Construction Specification For the 241-AW Tank Farm Backfill



9413147.0022

- B-120-C7, Construction Specification For the 241-AW Tank Farm Completion

- B-120-D1, Design Specification For Primary and Secondary Steel Tanks 241-AW Tank Farm.

Those documents cited national codes and standards such as ASME, Section VIII, Division 2, ACI 318, ASME B31.1, and Hanford Plant Standards as requirements for materials, design, and construction practices.

Before 1975, seven double-shell dangerous waste storage tanks had been designed, constructed, and operated in the AY-, AZ-, and SY-Tank Farms without significant problems. To increase conservatism in tank design, the following improvements were made while utilizing the basic design of the previous double-shell tanks.

1. A waste tank bottom flatness tolerance was developed to reduce localized stresses in the tank bottom.

2. A higher strength steel was used for both the primary tank and the secondary steel liners. The design temperature was raised to 350° F from 250° F for the previous tanks because high temperature evaporation processes were being considered. The primary and secondary steel tanks were fabricated with ASTM A-537, Class I carbon steel plate. On previous double-shell tanks constructed at Hanford, ASTM A-516 and ASTM A-515 steels were used. The yield strength of ASTM A-537 steel at 350° F (177° C) is 39,000 psi ($2.7 \times 10^3$ kg/cm$^2$) while the yield strength of A-516 and A-515 steel is 30,000 psi ($2.1 \times 10^3$ kg/cm$^2$) at 350° F (177° C).

3. Tank bottom plate patterns and fabrication sequences were designed to be less susceptible to fabrication deformations to reduce local stresses.

4. Airflow through the annulus for cooling the primary tank was increased.

5. Dome strength was increased by providing more J-bolts in the dome.

6. More reinforcing steel was installed in the concrete dome for resisting thermal stresses.

7. More comprehensive analysis based on the expected operating conditions was performed.

To establish the double-shell tank design bases or methodology, several national codes were reviewed and none were entirely suitable for the design of tanks to store radioactive wastes at the Hanford Site. It was determined that Section VIII, Division 2 of the ASME Code would provide an adequate basis for documentation, design, fabrication and inspection (see Appendix A) of the double-shell tanks. That portion of the ASME code provides for tank design by analyses. The design specification, B-120-D1, was written with the ASME code as a basis. Construction specification B-120-C4 was written for the primary and secondary steel tanks and construction specification B-120-C5 was written for the concrete shell. Construction specification B-120-C4 imposed additional restrictions or criteria on the ASME code allowables.

Construction specification B-120-C7 was written for the other reinforced concrete structures, central-, annulus-, feed-pits, etc., and the process piping.

Table 2 shows where the design specifications, construction specifications, and other studies satisfied the design criteria requirements for the double-shell tanks.

9413147.0024

### 5.1.2 Construction

During construction of the double-shell tanks, tank system components that could affect the integrity of the tanks were examined for compliance with those specifications (B-120-D1, B-120-C4, and B-120-C7) according to inspection requirements in the construction specifications. Results of the inspections were kept in daily logs, summary checklists, detailed daily checklists, and test reports. These results were submitted to the project file as required by an inspection plan. Where non-conformance with specifications was identified, the problems were resolved before proceeding with construction.

### 5.1.3 Operation

As construction of the tank system was completed, specifications and standards were written to define process and operating limits that comply with the design criteria. The specifications and standards (operating specifications or process specifications) for waste composition, liquid level, dome loading, pressures and temperatures were similar to existing 241-AY and 241-AZ double-shell tanks (RHO-MA-151, Section D, RHO-MA-151, Section G). Operating guidelines were established for radiation levels in the ventilation air, temperatures in tank interior, temperatures in the structural concrete, fill levels, etc. (see Table 3). The operating parameters were constantly monitored.

When operational limits[2] are approached or exceeded, the facts are reported as an "off-normal condition/event report," or an "operating limit deviation report." A review of historical reports showed that the design criteria for the double-shell tanks have not been violated and that no leaks from the primary containment system occurred due to structural failure under normal conditions.[3]

At present, operating specifications for AW Tank Farm are given in OSD-T-151-00007. Surveillance data of operating parameters (criteria) is analyzed as per Westinghouse Hanford Company approved procedures by Tank Farm Surveillance Analysis and Support (TFSAS). The surveillance data is analyzed for anomalies, trends, and departures from steady state. Reporting on these events is controlled by Westinghouse Hanford Company approved procedures for "occurrence reporting" by the degree of significance. Surveillance data is reported by TFSAS in quarterly reports. Through the operating specifications and surveillance reporting the tank farm is under rigid administrative control.

A review of the control manuals, procedures, reports, and operating procedures gave strong evidence that the tank system design criteria will not be violated in the future.

Operational safety aspects of AW tank farm double-shell waste storage tanks were analyzed in detail and incorporated into safety analysis reports (ARH-CD-719 and SD-WM-SAR-016). Those reports were reviewed; no problems relating to the structural integrity of the tank system were identified.

### 5.1.4 Other Considerations

Some of the Tank Farms 28 double shell tanks store waste that retains the hydrogen gas generated in the waste and then periodically release the gas. There is concern that upon release of the hydrogen an explosive gas mixture may exist. AW-Tank Farm double-shell tanks are not known or suspected of retaining hydrogen gas (WHC-EP-0377). On another issue, some tanks contain ferrocyanide salts that may lead to explosive conditions. AW-Tank Farm double-shell tanks do not contain ferrocyanide salts (WHC-EP-0422).

---

[2]Operational limits are set below design criteria so that corrective action is taken before design criteria are exceeded.

[3]The primary carrier pipe in slurry line 161 was damaged and taken out of service after non-neutralized waste was transferred through it; secondary containment was not breached. This was an unusual occurrence caused by violation of operating procedures that has since been controlled through corrective action (SD-WM-SAR-016). Slurry line 161 is not in service and it is not part of Part B permit application for Double-Shell Tank System Dangerous Waste.



9413147.0025

# 6.0 ANALYSES

## 6.1 PRE- AND POST-CONSTRUCTION DESIGN ANALYSIS OF DSTS (ITEMS 1 THROUGH 6)

Analyses of the primary and secondary steel tanks with reinforced concrete encasements were conducted by Basic Technology, Inc., as tank designer for U.S. Steel, and URS/John A. Blume & Associates, Engineers.

Basic Technology, Inc. Tank Analyses--The design specification, B-120-D1, required the tank designer, Basic Technology, Inc., to determine the structural integrity of the tanks during construction for an operational life of 50 years. The following loads were analyzed.

Construction Phase Loads

- Wind loads
- Stress relief
- Hydrostatic test loads
- Concrete placement loads.

Operational Loads

- Liquid level cycling (fatigue)
- Thermal cycling
- Thermal growth restraint
- Static loads
  - Internal ullage space pressures
  - Tank contents static head
  - Dynamic loads (safe shutdown earthquake).

The requirements for the stress analysis were as follows:

1. The stress analysis techniques to be employed were in accordance with those established by ASME Section VIII, Division 2, Appendix 4.

2. The maximum allowable stress intensity was defined in ASME Section VIII, Division 2, Appendix 4, except as per B-120-C4 that imposed the following additional constraints:



9413147.0025

a. The principal tension stresses on the inner surface of the primary tank should not exceed 0.9 times the ASME Code allowable yield strength of the material at the applicable temperature when subjected to operational loads during its service life.

b. The principal stresses in the primary tank should not exceed 0.75 times the ASME Code allowable yield strength of the material at the applicable temperature when subjected to construction loads.

3. The stress analysis of the tanks is based on the construction loads or load combinations listed below.

   a. Wind loads acting alone on primary tanks.

   b. Wind loads acting alone on secondary tanks.

   c. Wind loads and stress relief loads acting on the primary tanks. For this load condition, the designer verified that the stress relief operation would not result in any permanent deformation that would cause the stress levels to exceed the allowable when the tank is subsequently subjected to the operating load.

   d. Wind loads and hydrostatic test loads acting on the primary tank.

   e. Concrete pour loads acting alone.

4. The stress analysis of the tanks was based on the operational load combinations listed below.

   a. Thermal growth restraint loads plus static loads acting on the secondary tanks.

   b. Thermal growth restraint loads plus static loads plus dynamic loads acting on the primary tanks. Liquid level cycling loads and thermal cycling loads were evaluated and included with the other loads listed in this subparagraph.

The results of those analyses were documented in a stress report (RHO-R-18) certified by two registered Professional Engineers competent in the field of storage tanks and/or pressure vessel design. The results of the seismic analysis were presented separately in a supplement design report (RHO-R-19).



9413147.0027

URS/John A. Blume & Associates, Engineers' Tank Analyses--Since 1971, URS/John A. Blume & Associates, Engineers (URS/Blume), under contract to Vitro Engineering Corporation (Vitro), had been conducting studies using the finite element method of analysis of the waste storage tanks at the Hanford Site. The first of these studies, gravity and seismic load analyses of the 241-AZ tanks, was conducted in 1971, and the second, analyses of the 241-SY tanks for gravity, seismic, and thermal loads, was conducted in 1974. In 1976, URS/Blume began studies of the 241-AW tanks. In these finite element studies, a single double-shell tank and surrounding soil was modeled with axisymetric elements. The effects of neighboring tanks and non-axisymetric soil profile were ignored. With these fundamental approximations and assumptions, the computed gravity and seismic results were expected to be conservative. The finite element model was driven by an acceleration time designed to produce a response spectrum equivalent to the safe shutdown earthquake design spectrum (RHO-C-60). Those studies were conducted in four phases.

- Phase I consisted of a preliminary structural review of the 241-AW tanks proposed at that time. Although the proposed tanks were essentially identical to the existing 241-AZ and 241-SY tanks, the differences in design criteria used for the AW tanks prevented the results of the analysis of the AZ and SY tanks from being directly applicable (ARH-R-218).

- Phase II included more detailed analyses of the proposed 241-AW tanks for long-term dead, live, and thermal loads. The tanks were also analyzed for their ability to withstand the safe-shutdown earthquake (SSE) ground motions (ARH-R-219).

- Phase III analyses were of various details of the 241-AW tanks, particularly the steel tank knuckles and the concrete tank connections. Phase III also included an update of the previous analyses (RHO-C-17).

- Phase IV consisted of analyses of the 241-AW tanks for new design loadings and an investigation of the possibility of buckling and yielding of the steel plate of the primary steel tanks under negative vapor pressure (vacuum loading) (RHO-C-60).

In Phase IV, the primary steel structure of the 241-AW tank was analyzed for:

- The hydrostatic loads and the hydrodynamic loads due to the safe shutdown earthquake for a liquid level of 35 feet, 2 inches and a maximum specific gravity of 1.7.



9413147.0028

- The thermal loads due to a liquid level of 35 feet, 2 inches and a maximum liquid temperature of 350° F.
- The loads due to relative displacements at the top and bottom supports of the primary steel structure induced by thermal-creep displacements in the tank's concrete shell.
- The loads due to internal negative pressures (vacuum loading).

The results of the previous thermal cycling and creep analyses, as well as the seismic and gravity load analyses, were used in the Phase IV analyses. To analyze the effects of thermal creep, the temperature gradient for the higher liquid level was developed proportionally from the old data.

For all the loads, the longitudinal and circumferential stresses throughout the primary steel structure, the stress intensities, and the magnitude and location of the maximum stresses were calculated.

Another task for Phase IV was to investigate the problems of buckling and yielding in the steel pate under vacuum loading. For that analysis, the dead load of the primary steel structure was considered, and the tank was assumed to have three inches of water and at an ambient temperature of 70° F. The longitudinal and circumferential stresses throughout the tank, including the flat plate, for various vacuum loading conditions were calculated.

Phase IV Conclusions and Recommendations (RHO-C-60):

"The stress intensities calculated for the primary steel tank were, in general, well below the allowable values. However, under the long-term and seismic loads, the computed stress is over the value of the yield stress at the upper knuckle. When seismic loading is not considered for the upper knuckle, this stress is reduced by as much as 60 percent. The lower knuckle region also showed stress value that is over the 39 ksi yield value at 350° F when a rigid support was assumed. Such an assumption, however, is very conservative and will give the upper bound stress value near the lower knuckle region. If an elastic support is assumed, stresses are found to be quite below the yield value.

It has been determined that a potential for buckling exists at the tank base. To study this buckling problem in greater depth, it is recommended that a nonlinear large displacement approach be used to rigorously consider the buckling phenomena. In such an approach, the nonlinear structural behavior between the primary tank base and the insulating



9413147.0029

concrete should also be adequately modelled by nonlinear gap elements. A suitable computer program should then be chosen which can capture nonlinear structural responses with large displacement formulation for the buckling analyses."

For the concerns identified in the Phase IV analyses, no follow-on structural analyses were discovered. At this time, additional structural analyses are planned (see WHC-EP-0403). These new analyses will evaluate double shell tank interaction during seismic events, temperature and pressure induced buckling, and the effects of new seismic design and evaluation guidelines. This is done as part of Tank Farms continuing self-assessment.

9413147.0030

## 6.2 241-AW CLEAN-OUT BOXES (COB) 1-12 ANALYSES (ITEM 7)

The boxes are 2 ft outside diameter cylindrically shaped and constructed of carbon steel plate ASTM A36, 1/4-in. thick. The floor plate is 3/4-in. thick ASTM A36, and the cover is 12 gauge carbon steel sheet metal ASTM A569. The riser is 3 ft-12 in. long Schedule 40 pipe ASTM A53.

The clean-out box assemblies were analyzed per ASME Section VIII, Division I for a hydrostatic test pressure of 90 psi and found to be adequate (see Appendix B[4]). The 2 in. encasement lines connecting the clean-out box assemblies to the process lines were investigated for thermal stress using the criteria outlined in ASME B31.1, paragraph 119.7.1, Section A.3. The encasement line design was found to be adequate for a temperature of "340° F." The 1 in. flush lines located inside the clean-out box were modified (source in Appendix B).

The clean-out boxes were taken out of service (source FDM-T-020-00002, Rev. A-1). For further discussion, see WHC-SD-WM-WP-057, Section 5.3.4.

## 6.3 PROCESS PIPING AND DRAIN LINE ANALYSES (ITEMS 8, 9, 10, 11)

Design and analysis of the process piping was done as per ASME B31.1 1977 edition. All process pipelines are pipe-in-pipe, Schedule 40 carbon steel except for V-021, V-022, V-023, and SN-274, which are Schedule 40 stainless steel lines (primary) encased in Schedule 40 carbon steel lines (secondary).

---

[4]COB 30 was not explicitly analyzed, but it is similar to COBs 1-12 and, therefore, could be qualified by similarity.

Process piping is used for two purposes: transporting product from the 242-A Evaporator to the tanks, and transferring material between tanks.

The process piping system description is given in FDM-T-200-00001. All process lines have a minimum average slope of 0.25 percent to assure proper drainage. The primary lines are encased with a secondary pipe (encasement) as an added precaution against leakage to the environment. All piping is designed to accommodate thermal expansion. The encasements are sized to permit movement of the primary line.

The process piping is all full-penetration butt-welded according to qualified (approved) procedure by certified welders. After fabrication, all welds are visually, dye-penetrant, and radiographically inspected. In addition, all piping is hydrostatically tested at 1-1/2 times the design pressure.

After all pipe fabrication is completed and accepted, the piping is covered with a minimum of 2.5 ft. (0.76 m) of earth to provide radiation shielding.

Thermal analyses and seismic analyses were performed on typical process piping and drainline configurations. A description of the analyses and results is given in Appendix B. The following piping was not specifically addressed in the analyses (no other analyses discovered).

From Item #8: SL 169, SL 509, SL 510.

From Item #9: SN 271, SN 609, SN 610, V-021, V-022, V-023.

From Item #10: DR 361, DR 369.

Although those piping systems were not specifically analyzed (no analyses have been discovered), the piping systems could be judged adequate by similarity of pipe materials and configurations with accepted piping.

## 6.4 241-AW 101-106 CENTRAL, ANNULUS, DRAIN AND FEED PUMP PITS (ITEM 12)

All these facilities were built to national codes and standards as required by construction specification B-120-C7. No analyses of these facilities was discovered.

Central Pump Pits--The reinforced concrete pit is 16 ft x 10 ft x 6 ft (LxWxD) with 1 ft. thick walls and floor. The cover block is 20 in. thick.

The floor of each pit is sloped toward a 3 in. unencased floor drain that drains liquids back to the tank via unencased 12 in. primary riser No. 3. (FDM-T-200-00001.)

Annulus Pump Pits--The reinforced concrete pit is 7 ft x 7 ft x 11 ft 7 in. with 1 ft. thick walls and floor. The cover block is 20 in. thick. There is a 3 in. unencased floor drain DR-M24 that drains into pump riser No. 20 that terminates in the annulus (FDM-T-200-00001).

Drain Pit (102-AW-021)--The drain pit is located on top of Tank 102-AW. This pit, measuring 8 ft by 12 ft 8 in. by 11 ft, is covered with three 20-in. thick cover blocks. Each cover block is approximately 4 ft 6 in. by 8 ft 11 in.

Feed Pump Pit 102-AW-02E--Because Tank 102-AW feeds supernatant to the 242-Evaporator/Crystallizer for slurry production, the tank includes feed pump pit 102-AW-02E. The feed pump pit is 9 ft square and 9 ft, 11 in. deep, has 12-in. thick reinforced concrete walls, and a 20-in. thick reinforced concrete cover block.

9413147.0032

No seismic or stress analyses for those structures was discovered although they were constructed as per the B-120-C7 specification.

## 6.5 THREE-INCH DRAIN LINES (ITEMS 13, 14, 15, 16)

Three-Inch Drains To Central Pump Pits 01A-06A (Item 13)--Central pump pits contain a 3 in. unencased floor drain DR-M24[5] that drains liquids back to the tank via a 12 in. unencased primary riser.

Three-Inch Drains To Annulus Pump Pits 01B-06B (Item 14)--These drains are 3 in. unencased floor drains DR M24[5] that drain into the pump riser that terminates in the annulus.

Three-Inch Drains To Feed Pump Pit 02E (Item 15)--This is a 3 in. unencased floor drain DR-M24[5] that drains to tank 102 via a tank riser.

Three-Inch Drains To Drain Pit 02D (Item 16)--These drain lines are the same drain lines in Item 10:

- 3-in. encased DR 361 - from valve pit AW-A.
- 3-in. encased DR 369 - from valve pit AW-B.

---

[5]DR-M24 denotes a drain (DR) line which meets the specification of Pipe Code M24. (see Appendix C).

The 3-in. drain lines in items 13 through 16 were not analyzed (no analyses discovered). Other 3-in. drain lines built as per pipe code M24 and construction specification B-120-C7 had been analyzed (see previous section entitled "Process Piping and Drain Line Analyses"). Items 13 through 16 could be judged acceptable to ASME B31.1 by comparison.

9413147.0033

## 7.0 DISCUSSION OF DESIGN STANDARDS

The principal design codes or standards, and evaluation criteria governing the design and construction of the AW-Tank Farm double-shell tanks and other AW-Tank Farm facilities are discussed below. In the discussion, the original design standards are contrasted with existing or current design standards:

1. ASME Code for Steel Tank Design

   - Original--ASME Boiler and Pressure Vessel Code, Section VIII, Division 2 - 1974 Edition.

   - Existing--ASME Boiler and Pressure Vessel Code, Section VIII, Division 2 - 1989 Edition.

**Discussion**

Parts AD, AM and Appendices 1, 4, and 5 of the ASME Code apply to tank design analyses. The controlling parameters for the DST primary and secondary steel tank liners are:

   - The allowable stress intensities for ASTM A-537 Class I carbon steel plate at 350° F are found in Tables ACS-1 (tension) and ACS-2 (yield) of the ASME code.

   - The combination of stress components, stress intensity factors (Part AD), and allowable limits on stress intensities are found in Appendix A (Mandatory Design Based On Stress Analysis), Part 4-130 (Basic Stress Intensity Limits), Figure 4-130.1, Stress Categories and Limits On Stress Intensity of the ASME code.

For all those parameters, identical values are found in the text of the design reports (RHO-R-18, RHO-R-19, RHO-C-60) and 1989 ASME Code edition. In a thorough comparison of the 1971 and 1989 editions of the ASME code, it was also determined that these principal parts of the code had not changed (WHC-SD-WM-ES-215, Rev. 0).

2. American Concrete Institute Code for Reinforced Concrete

   - Original--ACI 318-71 Building Code Requirements For Reinforced Concrete - 1971 Edition.

   - Existing--ACI 318-89 Building Code Requirements For Reinforced Concrete - 1989 Edition with Commentary ACI 318R-89.



9413147.0034

9413147.0035

**Discussion**

The controlling parameter for the DST concrete encasements and other AW Tank Farm concrete structures are:

- The concrete modulus of elasticity based on concrete strength found in Chapter 8 of both editions.
- The design strength capacity or strength reduction factors found in Chapter 9 of both editions.
- The required strength, combinations of loads, and load intensity factors found in Chapter 9 of both editions.
- The design strength for steel reinforcement found in Chapter 9 of both editions.

For all those parameters, identical values are found by direct comparison in the 1971 and 1989 ACI-318 code editions.

3. DOE-RL Design Criteria

- Original--DOE-RL Order 6430.1B, *Hanford Plant Standards*, "Standard Design Criteria (SDC) 4.1," Rev. 7, U.S. Department of Energy-Richland Operations Office, Richland, Washington, February, 1974.
- Existing--DOE-RL Order 6430.1B, *Hanford Plant Standards*, "Standard Design Criteria (SDC) 4.1," Rev. 11, U.S. Department of Energy-Richland Operations Office, Richland, Washington, September, 1989.

**Discussion**

When combined with dead and service loading criteria, the controlling parameter for the DST, piping systems, and other reinforced concrete structures (high hazard facilities) is the safe shutdown earthquake response spectra. In the 1974 edition, the response spectra is anchored to the 0.25 *g* zero period horizontal acceleration (ZPA), whereas, in the 1989 edition, the response spectra is anchored to the 0.2 *g* ZPA. The reduction in response spectra translates into a wider margin of safety for the DST and piping than originally had been analytically demonstrated.

4. Piping Design Code

- Original--ASME B31.1 - 1977 Power Piping.
- Existing--ASME B31.1 - 1989 Power Piping.

**Discussion**

The 1977 edition was not available. The parameter values in Tables 1 and 2 and elsewhere in the text of Appendix B are identical to those found in the 1989 edition. Therefore, the parameter values originally used are unchanged in the current version of ASME B 31.1 - 1989 Edition.

9413147.0036

## 8.0 CONCLUSIONS

The double-shell tanks and their ancillary facilities are conservatively designed using national codes, standards, and Hanford Site criteria as the design bases. All design specification, design criteria, construction records and operating records undergo careful review and checking. The control and checking of design, procurement and construction products ensures that the facilities comply with national codes, standards, and design specifications. Often, it has been analytically demonstrated that the design of the double shell tanks and transfer piping and drain systems provides margins of safety against failures. Those margins of safety are under continuing evaluation as new design and evaluation guidelines are formulated.

Control and monitoring of operating parameters ensures that design bases criteria are not exceeded. Corrective action is taken where needed. The Site conducts ongoing tests, investigations, and reviews to ensure operations and maintenance of the facilities are done properly. There are 10 years of operating history with no history of dangerous waste leaks from structural failure of the primary containment system[3] or facilities.

Current applicable codes and standards are essentially the same as the design bases in key areas of design and construction. Based on current knowledge it is concluded that collapse, rupture, or failure from structural failure from design, construction, or operational fault in the tank facilities is not imminent and is not reasonably probable for the remainder of the tank design life.

9413147.0037

## 9.0 REFERENCES

ASME *Boiler and Pressure Vessel Code*, Section VIII, Division, 2, American Society of Mechanical Engineers, New York, New York, 1989 Edition.

ASME *Boiler and Pressure Vessel Code*, Section VIII, Division 2 - 1974 Edition American Society of Mechanical Engineers, New York, New York, 1976.

ASME B31.1-1977, *Power Piping*, American Society of Mechanical Engineers, New York, New York, 1977.

AMSE B31.1 - 1989 *Power Piping* American Society of Mechanical Engineers, New York, New York, 1989.

ACI 318-71 *Building Code Requirements for Reinforced Concrete*, American Concrete Institute, Detroit, Michigan, 1971.

ACI 318-89 *Building Code Requirements For Reinforced Concrete* - 1989 Edition with Commentary, ACI 318R-89, American Concrete Institute, Detroit, Michigan, 1989.

ACI 318-71 Building Code Requirements For Reinforced Concrete - 1971 Edition.

ARH-CD-177, *Preliminary Conceptual Design Description Additional Double-Shell Waste Storage Tanks (Project No. BB-76-RL-008)*, H.W. Gerrish Jr., Atlantic Richfield Hanford Company, Richland, Washington, December 11, 1974.

ARH-CD-362, June 30, 1975, *Functional Design Criteria - Additional High-Level Waste Storage Facilities*, Rev. 2, K.H. Tanaka, Atlantic Richfield Hanford Company, Richland, Washington.

ARH-CD-377, 1975, *Conceptual Design Report - Additional High-Level Waste Storage Facilities*, K.H. Tanaka, Atlantic Richfield Hanford Company, Richland, Washington.

ARH-CD-719 , *Operational Safety Analysis Report, Double-Shell Waste Storage Tanks*, J.E. Mirabella, Atlantic Richfield Company, Richland, Washington, May 1977, Richland, Washington.

ARH-R-218, Structural Evaluation of Proposed 241-AW Tanks: Phase I - Investigation of Effects of Criteria Changes, prepared by URS/John A. Blume and Associates, Engineers, for Vitro Engineering, Richland, Washington, February 1976, Atlantic Richfield Hanford Company, Richland, Washington.



9413147.0038

ARH-R-219, Analysis of Underground Waste Storage Tanks 241-AW at Hanford, Washington, John A. Blume and Associates Engineers for Vitro Engineering, Richland, Washington, July 1976. Atlantic Richfield Hanford Company, Richland, Washington.

B-120-C1, *Construction Specification For the 241-AW Tank Farm Site Preparation*, prepared by Vitro Engineering Corporation, Richland, Washington for U.S. Department of Energy, February 1976.

B-120-C2, *Construction Specification For the 241-AW Tank Farm Excavation*, prepared by Vitro Engineering Corporation, Richland, Washington for U.S. Department of Energy, February 1976.

B-120-C3, *Construction Specification For the 241-AW Tank Farm Foundations*, prepared by Vitro Engineering Corporation, Richland, Washington for U.S. Department of Energy, May 1976.

B-120-C4, *Construction Specification for Primary and Secondary Steel Tanks - Project B-120, 241-AW Tank Farm*, prepared by Vitro Engineering Corporation, Richland, Washington for U.S. Department of Energy, April 1976.

B-120-C5, *Construction Specification For the 241-AW Tank Farm Concrete Tank Shells*, prepared by Vitro Engineering Corporation, Richland, Washington for U.S. Department of Energy, July 1977.

B-120-C6, *Construction Specification For the 241-AW Tank Farm Backfill*, prepared by Vitro Engineering Corporation, Richland, Washington for U.S. Department of Energy, March 1977.

B-120-C7, *Construction Specification For the 241-AW Tank Farm Completion*, prepared by Vitro Engineering Corporation, Richland, Washington for U.S. Department of Energy, October 1977.

B-120-D1, *Design Specification For Primary and Secondary Steel Tanks - Project B-120, 214-AW Tank Farm*, prepared by Vitro Engineering Corporation, Richland, Washington for U.S. Department of Energy, April 1976.

DOE-RL Order 6430.1B, *Hanford Plant Standards*, "Standard Design Criteria (SDC) 4.1," Rev. 11, U.S. Department Of Energy-Richland Operations Office, Richland, Washington, September 1989.

DOE-RL Order 6430.1B, *Hanford Plant Standards*, "Standard Design Criteria (SDC) 4.1," Rev. 7, U.S. Department Of Energy-Richland Operations Office, Richland, Washington, February 1974.

FDM-T-020-00002, Rev. A1, Waste Transfer and Routing Facilities Facility Description Manuel, prepared by Process Engineering Department, Research and Engineering, Rockwell Hanford Company, Richland, Washington, March 1985.



9413147.0039

FDM-T-200-00001, Rev. B-0, 241-AW Tank Farm Facility Description Manual, prepared by Process Engineering Department, Research and Engineering, Rockwell Hanford Company, Richland, Washington, September 1986.

Letter No. 8122, H. P. Shaw, Atlantic Richfield Hanford Company, to Mr. O. J. Elgert, Director, U. S. Energy Research and Development Administration, Richland Operations Office, subject: *Design Construction and Operation of Double-Shell Tanks, Fiscal Years Years 1976, 1977, and 1978*, dated November 5, 1976.

OSD-T-151-00007, Rev. G2, *Operating Specifications for 241-AN, AW, AY, AZ and SY Tank Farms*, G.L. Dunford, Westinghouse Hanford Company, Richland, Washington, November 1989.

RHO-C-17, *Additional Analyses of Underground Waste Storage Tanks 241-AW, Hanford, Washington*, John A. Blume and Associates, Engineers, for Vitro Engineering, Richland, Washington, May 1978.

RHO-C-60, *A Comprehensive Summary of the Analysis of the 241-AW Underground Waste Storage Tanks, Hanford, Washington*, John A. Blume and Associates, Engineers, for Vitro Engineering, Richland, Washington, July 1981.

RHO-MA-151, Section D, January 31, 1977, *Specifications and Standards for the Operation of 242-A Evaporator-Crystallizer and Associated Waste Storage Tanks*, Rockwell Hanford Company, Richland, Washington.

RHO-MA-151, Section G, June 11, 1980, *Process Specifications for the Operation of 241-AW and 241-AN Tank Farms*, Gary Dukelow, Rockwell Hanford Company, Richland, Washington.

RHO-R-18, "Design Report USERDA Double-Walled Waste Storage Tanks For Tank Farm No. 241-AW," Vol. 1, prepared by Basic Technology, Inc. for Rockwell Hanford Operations, Richland, Washington, February, 1977.

RHO-R-19, "Supplemental Design Report Of USERDA Waste Storage Primary Tank For Tank Farm No. 241-AW at Hanford," Vol. 1, prepared by Basic Technology, Inc. for Rockwell Hanford Operations, Richland, Washington, December, 1976.

SD-WM-SAR-016, May 16, 1986, Koontz, R.L., et al., Double-Shell Tank Farm Facility (241-AN, AW, AP, and SY) Safety Analysis Report, Westinghouse Hanford Company, Richland, Washington.

WAC-173-303-640, *Dangerous Waste Regulations, "Tank Systems,"* Washington Administrative Code, Washington State Department of Ecology, Olympia, Washington.

WHC-EP-0377, Rev 1, *"Safety Improvement Plan - Hydrogen in Waste Tanks,"* W. D. Leggett et al, Westinghouse Hanford, Company, Richland, Washington, September 1990.

WHC-EP-0403, *Waste Tank Properties and Contents Program Plan*, C. DeFigh-Price, Westinghouse Hanford Company, Richland, Washington, June 1991.

WHC-EP-0422, Rev 1, *"A Plan to Implement Remediation of Waste Tank Safety Issues at the Hanford Site,"* G. R. Wilson and I. E. Reep, Westinghouse Hanford Company, Richland, Washington, December 1991.

WHC-SD-WM-ES-215, Rev 0, *"Differences Between 1971 and 1989 Editions of the ASME Boiler and Pressure Vessel Code Section VIII, Division 2,"* N. K. Julyk for Westinghouse Hanford Company, Richland, Washington, June 1992.

WHC-SD-WM-WP-057, *Integrity Assessment Plan for 241-AW Tank Farm and Designated Ancillary Equipment*, Howard R. Gardner, Westinghouse Hanford Company, Richland, Washington, July 1990.

9413147.0041

# 10.0 TABLES

The following tables summarize the design basis criteria and specifications that were used to control the design, construction, and operation of the primary tank, secondary tank, and concrete encasement so that the design bases criteria have not been and are not exceeded.

9413147.0012

Table 1. Summary of Bases for Tank Design Criteria (after letter No. 8122)

| Design criteria element | Criteria value | Basis and comments |
|---|---|---|
| Primary Tank Capacity | 1,000,000 gal. (SPG 2.0) or 1,144,000 gal. (SPG 1.7) | ♦ Volume selected because it was the maximum volume experienced with single- and double-shell Hanford tanks.<br><br>♦ Present 75' diameter tanks have a proven free-standing, self-supporting dome design. |
| Specific Gravity | 2.0 (max.) | ♦ Justification of tanks was primarily for terminal liquor, Sp.G.1.60.<br>♦ However, slurry service is foreseen and the maximum combined solids and liquids Sp.G. would be 2.0<br>♦ This is based on the weighted average of 60 volume percent solids and 40 percent liquids with solids Sp.G. ranging from 2.26 to 2.51. |
| pH | 8 to 14 | ♦ Based on the dilute to concentrated caustic nature of Hanford wastes that are stored in carbon steel tanks.<br>♦ pH greater than 7 precludes storage of acid waste which would require more expensive stainless steel tanks.<br>♦ Caustic concentrations from concentrated wastes are expected to be from 2 M to not greater than 8 M. |
| Temperature of Concrete | 350 °F | ♦ Based on transfer of heat in the waste and considered potential high-temperature processes such as wiped film evaporation with a product temperature greater than 300 °F.<br><br>♦ A 350 °F temperature was specified for the first four double-shell tanks (AY & AZ) which were designed for high-level radioactive boiling wastes. |

Table 1. Summary of Bases for Tank Design Criteria (after letter No. 8122)

| Design criteria element | Criteria value | ·sis and comments |
|---|---|---|
| Heat Generation | 1,000,000 Btu/Hr. | ♦ Based on the concentration of 6.0 Ci/gal of $^{137}Cs$ which was derived from the maximum estimated design in the minimum anticipated volume.<br><br>♦ Rate is conservative due to the fact that the rate will decrease the longer the waste is stored. |
| Corrosion | 1 mil/yr. | ♦ A conservative average general corrosion allowance based on laboratory data that indicated corrosion rates up to 0.6 mil/yr for 8 M caustic (synthetic) waste solutions at temperatures up to 95 °C.<br><br>♦ Based on 50-year tank life, general corrosion would be less than 10 percent, which is within design allowances.<br><br>♦ Basis is conservative because waste will cool with age and decay. Laboratory data indicated corrosion less than 0.1 mil/yr at 25 °C.<br><br>♦ Stress corrosion cracking (SSC) has not yet been demonstrated on test samples with these solutions.<br><br>♦ Tanks still require stress relief (PWHT) to minimize potential for SSC. |

Table 1. Summary of Bases for Tank Design Criteria (after letter No. 8122)

| Design criteria element | Criteria value | Basis and comments |
|---|---|---|
| Pressure<br>Positive<br>Negative | <br>+ 60 in.<br>- 6 in. water | ♦ Pressure and vacuum were based on criteria and experience with former tanks.<br><br>♦ These criteria have been adequate and are applicable to new tanks.<br><br>♦ Pressure excursions can result from uneven heating caused by hot spots or chemical mixing.<br><br>♦ A slight vacuum is required on all tanks for vapor containment. |
| Seismic | 0.25 g horiz.<br>0.17 g vert.<br>(SSE) | ♦ Earthquake loads for category 1 facilities required designs for the SSE to ensure a safe and orderly shutdown of the facility prior to May, 1989.<br><br>♦ The design basis for the ground acceleration is stated in ERDA-1538, "Final Environmental Statement Waste Management Operation Hanford Reservation, Richland, Washington," December, 1975, Volume 2, Appendix 11.3-C. |
| Reinforced Concrete Tank with Secondary Liner (Tank)<br>Pressure<br>Temperature<br>Heat Generation<br>Seismic | Same as for Primary Tank | Same as for Primary Tank. |
| Dead Load | 6.5 ft. earthcover | ♦ Earthcover was based on radiation shielding requirements over the tank and facilities on top of the tank. |
| Live Load | 40 lb/ft$^2$ uniform,<br>50T concentrated | ♦ Live loading on the tank was based on previous tank criteria which allows for a crane plus the heaviest movable equipment. |

Table 2. Design Requirements Versus Applicable Design Standard or Code (after letter No. 8122).

| Design requirements | Specification section[6] | Applicable standard/ code/study/criteria | Remarks |
|---|---|---|---|
| Design Code | I.A., et al. | ASME Code, Section VIII, Div. 2 | ♦ No other section of the ASME Code or other Standards require a more rigorous stress analysis.<br>♦ The intent of requiring a Section VII, Div. 2 tank is to provide a product that is superior to any tank previously built at Hanford. |
| Tank Configuration | I.C.2 | ARH-CD-362 | ♦ This configuration has been shown to fulfill design requirements. |
| Construction Loads | | | ♦ The worst case combination will be considered. |
| a. Wind | II.C.1.a | HPS SDC-4.1 | ♦ This is consistent with the Uniform Building Code for construction wind loads (UBC-2308). |
| b. Stress Relief | II.C.1.b | Section VIII, Div. 2, Article F-4 | ♦ The design is to consider the tank integrity during Post-Weld Heat Treatment (PWHT) (one hour @ 400 °F. |
| c. Hydrostatic | II.C.1.c | Result of Designer's Analysis | ♦ This load will be much lower than service conditions. |
| d. Concrete Placement | II.C.2.d | B-120-C4 | ♦ Maximum allowable stress during concrete placement will be 18 ksi. |

Table 2. Design Requirements Versus Applicable Design Standard or Code (after letter No. 8122).

| Design requirements | Specification section[6] | Applicable standard/ code/study/criteria | Remarks |
|---|---|---|---|
| Operational Loads | | | ♦ The worst case combination will be considered. |
| a. 1,000,000 gallons at 2 spgr | II.A. | ARH-CD-362 | ♦ Specific gravity of maximum expected waste solution. |
| b. 350 °F in concrete | I.C.4.f | ARH-CD-362 | ♦ Maximum temperature based on future processes and expected product heat generation rate. Conservative. |
| c. Liquid Level Cycling | II.C.2.a | 241-AW SOP/s | ♦ Standard Operating Procedures will maintain operating conditions below design conditions. |
| d. Thermal Cycling | II.C.2.b | ARH-1601 | ♦ Conservative. SOP's will maintain operating conditions below design conditions. |
| e. Thermal Growth Restraint at Steel-Concrete Tangent Point | II.c | JABE-VITRO-07 | ♦ These values are yet to be determined. |
| f. Internal Pressure | II.C.2.d | ARH-1601 | ♦ Conservative. Pressure limits defined in operating standards are well below design limits. |
| g. Dynamic Loads<br>1. SSE<br>2. Dynamic Analysis<br>3. Hydrodynamic Effects | II.C.2.e<br>II.C.2.e<br>II.C.2.e | ERDA 1538<br>HPS SDC-4.1<br>TID-7024 | ♦ "Final Environmental Statement, Waste Management Operations Hanford Reservation, Richland, Washington," December, 1975.<br>♦ Employs accepted analysis techniques. |

Table 2. Design Requirements Versus Applicable Design Standard or Code (after letter No. 8122).

| Design requirements | Specification section[6] | Applicable standard/ code/study/criteria | Remarks |
|---|---|---|---|
| Stress Analysis Requirements | II.D | ASME Section VIII, Div. II | ♦ Allowable stress intensities shall be as defined in ASME Section VIII, Div. 2, Appendix 4. |
| a. Operational Stresses limited to (+) .9fy on wetted surface | II.D. | BCL study for the American Gas Association (reference not found) | ♦ To protect against SCC. The current estimate of the stress level in the AW Tanks is +0.61 $f_y$ for ASTM A537 steel. $f_y$ = yield stress. |
| b. Construction stresses limited to (+) .75 fy | II.D.4 | BCL study for the American Gas Association (reference not found) | ♦ To prevent plastic deformation during construction. |
| c. Designer verification that deformations after PWHT do not result in stresses that exceed allowables. | II.D.5.c | BNWL-B-475 | ♦ To protect against stress corrosion cracking (SCC). The fabricator will be required to support the lower knuckle during post-weld heat treating (PWHT). |
| Material Requirements | III. | ASME, Section VIII, Div. 2, Part AM | |
| a. ASTM A-537 Class I Steel | III.A | ASTM-A-547, ASTM A-20 | ♦ To provide increased strength and margin of safety against SCC. To allow for flatness tolerances that will be easier, less costly to meet. |
| b. Ultrasonic Testing | III.A | ASTM-A-578, Level II | ♦ To provide additional material quality control. |

Table 2. Design Requirements Versus Applicable Design Standard or Code (after letter No. 8122).

| Design requirements | Specification section[6] | Applicable standard/ code/study/criteria | Remarks |
|---|---|---|---|
| Specific Design Requirements | | | |
| a. All welded construction | IV.A. | Fabrication Experience | ♦ To provide superior leak tightness and corrosion resistance. |
| b. Minimum allowable plate thickness | IV.C. | JABE-VITRO-05 | ♦ These thicknesses have been verified by Blume as adequate. |
| c. .050" corrosion allowance | IV.D. | ARHCO tests | ♦ Conservative. |
| d. Circular lower knuckle section | IV.G. | VITRO-R-350 | ♦ To lower tank susceptibility to bottom deformation. |
| e. Tank bottoms shall be welded from the top side only | IV.H | VITRO-R-350 | ♦ To lower tank susceptibility to bottom deformation. |
| Post-Weld Heat Treatment | I.5, II.C.1.b. | Section VIII, Div. 2, Article F-4 | ♦ To relieve residual fabrication stresses and therefore minimize SCC |
| Heat Generation Rate (100,000 Btu's/hr) | I.4.e,f | ARH-CD-438 | ♦ Conservative.<br>♦ An HVAC system has been designed by Vitro to remove the anticipated heat. |
| Design Life (50 Years) | I.A, I.C.4.d | ARH-CD-362 | ♦ Conservative. Present anticipated use is less than 20 years. |
| The maximum time a secondary tank will contain waste solution will be one week | I.4.c.d | ARH-CD-362 | ♦ Waste in secondary tank would be pumped to a spare tank. |

Table 2. Design Requirements Versus Applicable Design Standard or Code (after letter No. 8122).

| Design requirements | Specification section[6] | Applicable standard/ code/study/criteria | Remarks |
|---|---|---|---|
| Bottom flatness tolerances | | BNWL-CD-480<br>Vitro-R-350 Letter, July 9, 1976, M. Vagins to J. F. Albaugh | ♦ Development work by BNW for 241-SY Tanks. |

Table 3. Operational Specifications and Standards - Underground Storage Tanks (after letter No. 8122).

| Variable | Limits[1] Specification[2] | Limits[1] Standard[3] | Purpose | Measurement Method | Measurement Frequency |
|---|---|---|---|---|---|
| Underground Storage Tanks | | | | | |
| Tank Composition | | | | | |
| a. pH | Minimum 8.0 | Minimum 9.0 | Protect steel tank linings | Sample or knowledge of feed | Each feed source |
| b. Sodium Molarity in Aging Waste | Maximum 6M | Maximum 5M | For sludge temperature control | Sample | As needed for admin. control |
| c. Organic Material in Tanks | No separable organic phase | Same as Spec. | Reduce potential for tank pressurization Corrosion Control | Sample or knowledge of feed | Each feed source |
| d. Nitrite Concentration | ≥500 ppm | ≥600 ppm | Corrosion Control | Sample or knowledge of feed | Each feed source |
| e. Nitrate Concentration | ≤6M | ≤5M | Corrosion Control | Sample or knowledge of feed | Each feed source |
| f. Sodium Hydroxide Concentration | ≤7M | <6M | | Sample or knowledge of feed | Each feed source |
| g. Radiolytic Hydrogen | Maximum 2% of vapor volume | Maximum 1% of vapor volume | Prevent explosive atmosphere | Sample or administrative control | Each feed source |
| h. Fissile Concentration | ≤0.05 gm/gal. | Same as Spec. | Criticality Prevention | Sample or knowledge of feed | Each feed source |
| i. Total Fissile Material | ≤50 kg per tank | Same as Spec. | Criticality Prevention | a) Sample analyses<br>b) Administrative Controls | a) Prior to use as slurry receivers<br>b) Each waste batch |
| Tank Liquid Levels | ≤30.4'(365") | ≤30.2'(362") | Prevent Overfilling | FIC or Manual Tape Reading | Each Shift |
| Liquid Level Changes<br>Reference: Volumes 1 and 2, February 1976, Tank Farm Surveillance, and C.M. Walker, "Waste Storage Tank Status and Leak Detection Criteria." | | | | | |

Table 3. Operational Specifications and Standards - Underground Storage Tanks (after letter No. 8122).

| Variable | Limits[1] Specification[2] | Standard[3] | Purpose | Measurement Method | Frequency |
|---|---|---|---|---|---|
| Unexplained Transfer Liquid Level Discrepancies | Min. -1.5" (4175 gal.) | Min. -1.0" (2750) gal.) | Leak Detection | FIC or Manual Tape Readings | First hour and every two hours thereafter during each transfer |
| Dome Loading - Soil Cover | <7' | <7' | Prevent Structural Damage to Dome | Survey. Maximum allowable soil depth to be indicated on tank riser or pit | Each additional disruption of soil (backfill permit required) |
| - Additional Live Or Equipment Loads | ≤50 Tons | ≤40 Tons | Prevent Structural Damage to Dome | Administrative Control | Review prior to each addition of equipment |
| Vapor Space Pressure | Max. 60" wg. | Max. 10" wg. | Contamination Control | Pressure Gauge | Each Shift |
| | Min. -6" wg. | Min. -3" wg. | Tank Protection | Pressure Gauge | Each Shift |
| Annulus Pressure | Max. 9" wg. | Max. 4" wg. | Tank Protection | Pressure Gauge | Each Shift |
| | Min. 6" wg. | Min. -3" wg. | Tank Protection | Pressure Gauge | Each Shift |
| Temperatures - Liquid | Max. 230 °F | Max. 210 °F | Offgas Control | Thermocouples | Monthly for static tanks - Daily for active tanks |
| - Solids | Max. 350 °F | Max. 300 °F | Protection of Concrete | | |

Table 3. Operational Specifications and Standards - Underground Storage Tanks (after letter No. 8122).

| Variable | Limits[1] Specification[2] | Limits[1] Standard[3] | Purpose | Measurement Method | Measurement Frequency |
|---|---|---|---|---|---|
| Temperature Gradients | | | | | |
| - Solution Temperature | 5 °F per day or 40 °F per 8 days | 5 °F per day or 40 °F per 8 days | Prevent structural damage to tank | Thermocouples | Each shift during transfer or as specified by Tank Farm Engineering |
| - Concrete Temperature | 5 °F per day | 5 °F per day | Prevent structural damage to tank | Thermocouples | Each shift during transfer or as specified by TFPE |
| - Concrete Δ T | ≤30 °F/foot of concrete thickness in tank walls or dome | ≤30 °F/foot of concrete thickness in tank walls or dome | Prevent structural damage to tank | Thermocouple pairs | Twice per day |
| Hydrostatic Head - At Tank Wall | Max. 660" wg. | Max. 660" wg. | Prevent structural damage to tank | LL (in) x Spg | If Spg > 1.67 |

[1]May not be current, but generally applicable over life of operation.

[2]Specification: The specification limits are set to prevent excessive corrosion and minimize structural stresses that the tanks and associated facilities are subjected to during operation.

[3]Standard: Standards are process and operating limits established as control points which, when exceeded, provide warning of an approaching specification limit.

# APPENDIX A

## OVERVIEW OF TANK DESIGN CODE

9413147.0054

Reference Letter: Abstracted from Attachment II of letter from H. P. Shaw, Atlantic Richfield Hanford Company, to Mr. L. J. Adams, Director, U. S. Energy Research & Development Administration, Richland Operations Office, Re: Project B-120, *Additional High-Level Waste Storage and Handling Facilities, Basis for Design Considerations*, dated April 29, 1976.

## OVERVIEW OF TANK DESIGN

There is no code or licensing guideline to follow in the design and construction of waste storage tanks. Strictly speaking, ASME Section III addresses requirements for the construction of nuclear power plant items, while ASME Section VIII covers requirements for construction of pressure vessels. The waste storage tanks built at Hanford do not fall within either of these classifications.

After reviewing several codes, it was decided that Section VIII, Division 2, of the ASME Code would best meet the required design, construction and quality requirements for these tanks. The result of the design and analysis effort required by the Code will be the most complete analytic study of this tank configuration to date. With the subsequent construction of these tanks to Section VIII, Division 2, requirements, the intent is that the tanks will be equivalent to a Section VIII Code stamped vessel.

Section VIII and Section III combine primary and secondary stresses in the same manner. The allowable stress intensities are also the same for identical grades of steel. Section III differs from Section VIII in that it requires an analysis of conditions that might occur in a nuclear power plant (emergency, upset and faulted conditions). These conditions would not apply to waste storage tanks.

Section VIII, Division 2, is consistent with the Quality Assurance requirements called out for previous tanks constructed at Hanford. Section VIII Division 2, does not call out all requirements found in Section III. Implementing the quality assurance requirements of Section III would increase the cost of these tanks to an amount greater than appropriated. Section III is designed to provide the full traceability, material control and independent third-party inspection required for a reactor pressure vessel. It is not felt that these controls are needed to build tanks that will satisfy projected service requirements.

For these two basic reasons, Section VIII, Division 2, was chosen for the design and construction of the 241-AW Tank Farm. It is felt that Section VIII, Division 2, will provide the necessary design, construction and quality requirements for the tanks, without imposing superfluous and wasteful requirements.

The intent of requiring a Section VIII, Division 2, tank is to provide a product that is superior to any tank previously built at Hanford. (Section VIII, Division 1, does not provide a stress analysis that includes the impact of secondary stresses on the vessel. It also allows higher stress intensities. Only partial radiographic examination and no magnetic particle examination is required with Section VIII, Division 1.)



9413147.0055

9413147.0056

# APPENDIX B

## REPORT ON STRESS ANALYSIS OF 241-AW TANK FARM PIPING AS FOUND IN THE B-120 PROJECT RECORDS

(With Notations By W. J. Karwoski)

This page intentionally left blank.

9413147.0057

# STRESS ANALYSIS OF

# THE

# 241-AW TANK FARM PIPING

G.W. WYATT

AUGUST 1978

9413147.0059

# STRESS REPORT

## Project B-120

## Table of Contents

Abstract

I. Objective

II. Summary of Conclusions

III. Discussion and Results

A. Thermal Analysis

(1) Process Piping

(2) Steam Piping

(3) Jumper Assemblies

(4) Clean-Out Box

B. Seismic Analysis

IV. References

V. List of Drawings

VI. Appendix

A. Isometric Sketches

B. Computer Runs

C. Hand Calculations - Piping

D. Hand Calculations - Clean-Out Box

9413447.0059

# STRESS REPORT

# 241 TANK FARM

# PROJECT B-120

## ABSTRACT

This report covers the stress analysis for the process piping, clean-out box assemblies, steam piping and jumper assemblies in the 241 AW Tank Farm. Piping systems that connect the 241 AW Farm to the 241 Evaporator Building and to the 241 A Farm are also analyzed.

9413147.0060

## I. OBJECTIVE

The objective of this report is to demonstrate that the process and steam piping as designed meets all the criteria requirements as outlined in Atlantic Richfield Hanford Company (ARHCO) document #ARH-CD-362.
The thermal analysis for all process piping and jumper assemblies was made using the computer program MEL-21. A seismic analysis was performed on certain representative piping runs and the results are presented in Section III.B. of this report. Where detailed analysis was not performed, the system was judged acceptable by Section 119.7.1 A.1 and A.2 of ANSI B31.1. 1989 Edn. SAME, WB.
This section of the Code allows systems to be judged by comparison with previously analyzed systems and/or piping systems duplicating a successfully operating installation.

## II. SUMMARY AND CONCLUSIONS

The results of this report include a thermal analysis of the process piping, steam piping, clean-out box assemblies and jumper assemblies, and a seismic analysis of certain representative pipe runs.

Table I gives the summary of the thermal analysis performed on the piping systems and jumper assemblies. This Table includes the pipeline and jumper identification, computer problem file name and maximum anticipated stress. Table II gives piping material properties and stress allowables used in the analysis. The analysis verified that the thermal stress levels reached in the piping systems and jumper assemblies are below allowable limits.

Section III.B. contains a seismic analysis of the piping systems in the B-120 Tank Farm. This analysis is divided into three parts. Part I investigates the effects of a seismic event on typical "S" bends in the piping systems. Part II investigates the effects of a seismic event on the straight sections of pipe. Part III investigates the effects of relative building motions that would occur in the B-120 Tank Farm during seismic activity. The analysis verified that the stress levels reached in the piping systems during a seismic event are below allowable limits.

9413147.0061

## III. DISCUSSION AND RESULTS

### A. THERMAL ANALYSIS

#### 1. Process Piping

The process lines were analyzed for stresses resulting from thermal expansion. The slurry lines have a maximum normal operating temperature of 200° F. The maximum normal operating temperature of the supernatant lines is 275° F. All process lines are capable of being steam cleaned with 100 psig saturated steam at 340° F. The temperature used in the thermal analysis of the process piping was, therefore, 340° F.

All process lines were analyzed using the MEL-21 computer program. The 2 in. slurry lines are encased by 4 in. secondary lines and the 3 in. supernatant lines are encased by 6 in. secondary lines. This was done to ensure the containment of possible leaks in the primary pipes. Since the highest stresses occur in the pipes with the largest

TABLE II

Encasement Process Pipe (4 in. and 6 in. nominal pipe)

Material - ASTM A53 Seamless GRB

1989 EDIT. SAME, WJK

Allowable Stress (Hot and Cold) - 15,000 psi

Allowable Expansion Stress - 37,500 psi

Young's Modulus - e = 27.9 x $10^6$ psi

Coefficient of Thermal - - 1.81 Mills/in.

Expansion

Poisson's Ratio - = .300

Encased Slurry Lines (2 in. nominal pipe)

Material - ASTM A53 seamless GRB

Allowable Stress (Hot and Cold) - 15,000 psi

Allowable Expansion Stress - 34,468 psi

Young's Modulus - e = 27.9 x $10^6$ psi

Coefficient of Thermal - = 1.31 Mills/in.

Expansion

Poisson's Ratio - = .300

Encased Supernatant Lines (3 in. nominal pipe)

Material - ASTM A53 Seamless GRB

Allowable Stress (Hot and Cold) - 15,000 psi

Allowable Expansion Stress - 35,444 psi

Young's Modulus - e = 27.9 x $10^6$ psi

Coefficient of Thermal - = 1.31 Mills/In.

Expansion

Poisson's Ratio - = .300



9413147.0062

diameter, the MEL-21 program was applied to the 4 in. and 6 in. encasement lines. This report assumes that thermal stresses in the primary pipe are the same as in the larger secondary pipe. This is a conservative assumption. For the purpose of this analysis the encasement pipes were not considered to have bubble wrap around their entire length; only at the bends. This approach gives stresses higher than would result if the 1/2 inch minimum gap around the entire length was taken under consideration.

The 10 in. drainline, 10 in. DR-335-M24, is shown on isometric sketch number ES-8120-M3. The MEL-21 computer program was applied to its 12 in. encasement for the reasons outlined above.

Table II contains the material properties used in the analysis of the process piping systems. The section of hand-written calculations, Appendix C, contains analysis relative to maximum allowable stress and expansion coefficients used in the computer program.

2. Steam Piping

The 1-1/2 in. diameter steam flush lines from flush pit 241-AW to valve pit 241-AW-A, from flush pit 241-AW to valve pit 241-AW-B, and from flush pit 241-AW to feed pump pit 241-AW-02E were analyzed by hand for thermal expansion. These pipelines were found to be adequately flexible per the criterion given in ANSI 331.1 119.7.1, A.3. These calculations are presented in Appendix C of this report.

3. Jumper Assemblies

Certain jumper assemblies were analyzed for thermal expansion. Assemblies that were similar to the ones analyzed were judged to be adequate per 331.1, Section 119.7.1, paragraph A.2.
The jumpers were analyzed using the MEL-21 computer program. The results of these analyses are shown in Table I. Table II gives the material properties used. The configurations analyzed are shown in Sketches ES-8120-M7, ES-8120-M8, ES-8120-M9, and ES-8120-M10.



9413147.0063

4. Clean-Out Box

The clean-out box assemblies were analyzed per ASME Section VIII, Division I for a hydrostatic test pressure of 90 psi and found to be adequate. (See Appendix D.) The 2 in. encasement lines connecting the clean-out box assemblies to the process lines were investigated for thermal stress using the criterion outlined in B31.1, paragraph 119.7.1, Section A.3. The encasement line design was found to be adequate for the expected maximum temperature of 340° F. The 1" flush lines located inside the clean-out box were modified per DFC #B120-170

8. SEISMIC ANALYSIS

Introduction

This section divides the seismic analysis of the piping system in the B-120 Tank Farm into three parts. In Part I, the stresses which develop in the "S" bends of the piping runs are investigated. The maximum direct stresses due to the combined effects of weight, pressure, and static seismic loads were computed using the MEL-21 computer program. These stresses were compared to the stress allowables given in paragraph 104.3.2 of ANSI B31.1.

Part II contains hand calculations to verify that the straight sections of pipe in the piping runs will withstand the axial and bending stresses that would result from a seismic event. The methods and assumptions used in this analysis were the same as those used in document JABE-VITRO-04. The calculated stresses were compared to the stress allowables defined in the ASME Boiler and Pressure Code, Section III, Division I, for a faulted condition.

Part III contains hand calculations done by Dr. Ming-Ou Chang to investigate the relative motions of the buildings in the B-120 Tank Farm that would occur during a seismic event. These relative motions were found to be small (i.e. less than .2 in.). The stresses on the piping system of the tank farm due to these motions are, therefore, considered to be negligible.



9413147.0064

## Part I - "S" Bend Analysis

Three typical "S" bends in the B-120 Tank Farm were analyzed by computer to determine the combined effect of stress due to weight, pressure, and occasional loads (i.e. seismic loads). Case "I" is a 2 in. slurry line with a design pressure of 400 psi. Case II is a 3 in. supernatant line with a design pressure of 275 psi. Case III is a 4 in. slurry line encasement with a design pressure of 0 psi. An isometric of each case is shown on page 7 and 8 of this report.

Seismic loads were applied to each case as equivalent vertical and horizontal static forces according to the formula:

$$f = 1.5\ C_p W \quad \text{(Ref. JA8E-VITRO-02, page 14)}$$

where:

$f$ = distributed equivalent static force

$w$ = distributed weight of piping and contents

$C_p$ = peak spectral response acceleration

For OBE conditions in "other locations except roof", $C_p$ = .75 g horizontal and $C_p$ = .5 g vertical. Vertical and horizontal accelerations due to a seismic event can, therefore, be computed as follows:

$$a_{vertical} = (1.5)\ (.5\ g) = .75\ g$$
$$a_{horizontal} = (1.5)\ (.75\ g) = 1.125\ g$$

These accelerations were used as shown on page 10 of this report to develop suitable computer input information.



9413147.0065

VITRO ENGINEERING CORPORATION

DESIGN ANALYSIS

FOR
LOCATION
SUBJECT

PAGE
JOB NO.
DATE
BY
CHECKED BY

CASE I

4" ENCASEMENT
FOR 2" SL-168-M25

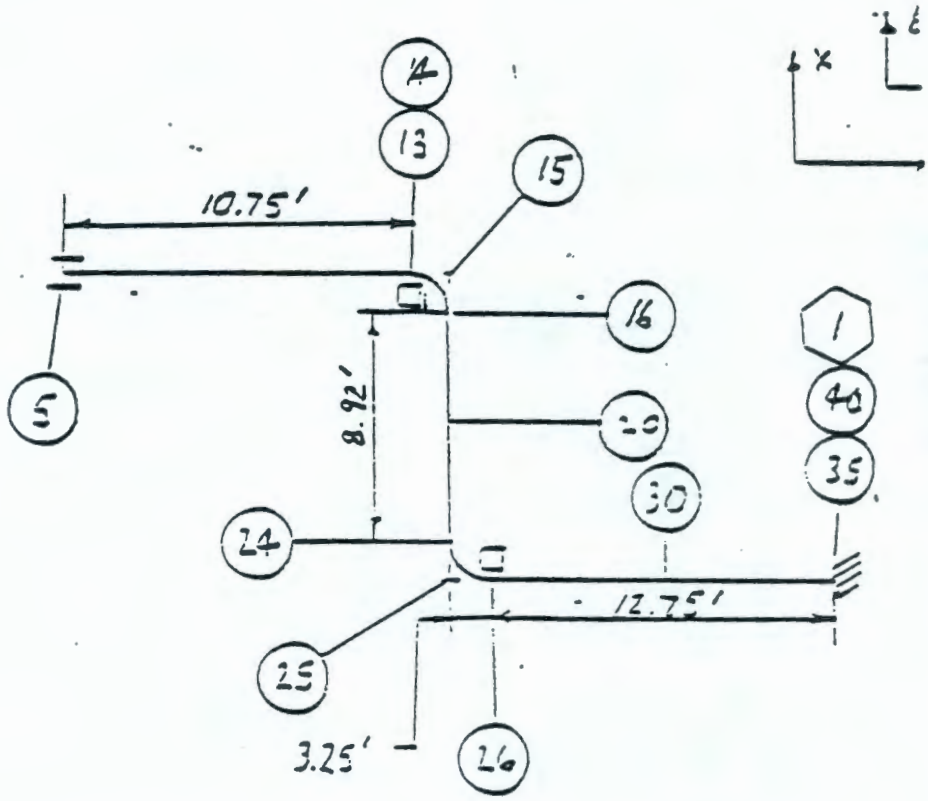


CASE II

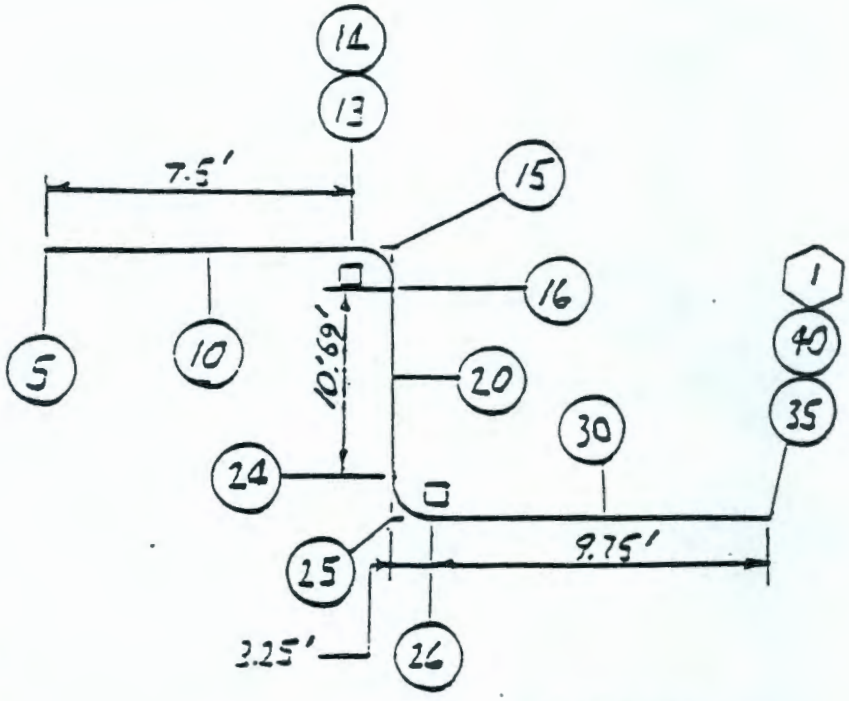


END CONDITIONS

1) FIXED - FIXED
2) FREE - FREE
3) FIXED - FREE

REFERENCE
ES-BLD-M2



9413147.0066

# DESIGN ANALYSIS

FOR
LOCATION
SUBJECT

PAGE
JOB NO.
DATE
BY
CHECKED BY

CASE III

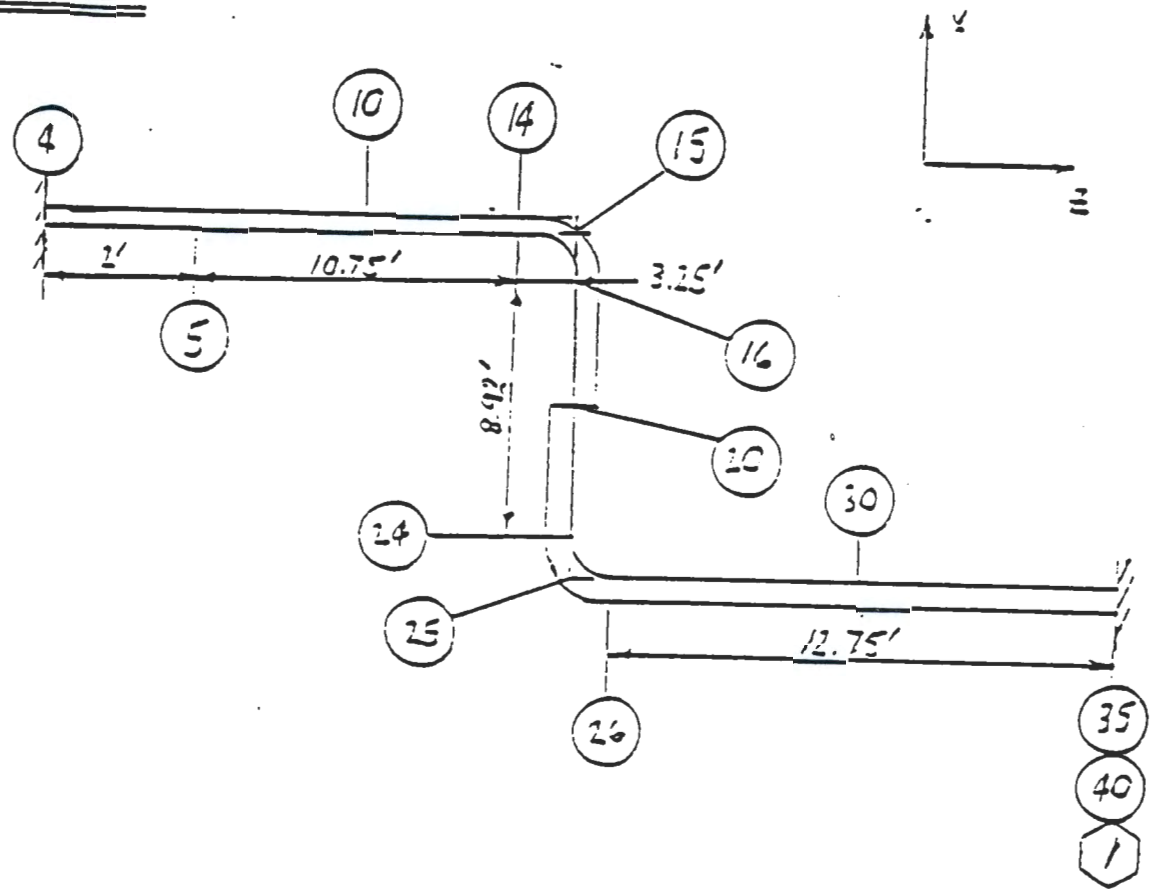


REFERENCE
ES-B120-M2

9413147.0057

Summary of Results

From ANSI 831.1, 1977 Edition, paragraph 104.8.2, it is stated in equation 12-a that:

$$\frac{PDo}{4tn} + \frac{.75\ i\ MA}{z} + \frac{.75\ i\ MB}{z} \leq K\ Sh$$

1989 EDIT. EQ. 11(A) WJK

where

$\frac{PDo}{4tn}$ = stress due to internal pressure

$\frac{.75\ i\ MA}{z}$ = stress due to weight

$\frac{.75\ i\ MB}{z}$ = stress due to occasion loads (i.e. seismic loads)

K = 1.2 for occasional loads acting less than 1% of operating period.

Sh = Allowable stress

From ANSI 831.1 Appendix A:

Sh = 15,000 psi (for A106 CS grade b) 1989 EDIT. SAME, WJK

The maximum allowable combined stress for weight, pressure, and seismic is:

(K) (Sh) = (1.2) (15,000) = 18,000 PSI 1989 EDIT. K=1.2, SAME, WJK

From Table E-1, page 10, the maximum computed direct stress was 15,705 psi (Case I).

15,705 psi < 18,000 psi

∴ These "S" bends satisfy the ANSI 831.1 requirements for combined stress due to weight, pressure and seismic loading.



9413147.0068

TABLE E-1

| Case No. | End Conditions Anchor #1 | Anchor #2 | Design Pressure | Max. Direct Stress Wt + P + EQ |
|---|---|---|---|---|
| I* | Fixed | Fixed | 400 psi | 11,583 psi |
| I* | Free | Free | 400 psi | 15,695 psi |
| I* | Free | Fixed | 400 psi | 11,564 psi |
| I* | Fixed | Free | 400 psi | 15,705 psi |
| II* | Fixed | Fixed | 275 psi | 5,156 psi |
| II* | Free | Free | 275 psi | 5,196 psi |
| II* | Free | Fixed | 275 psi | 4,980 psi |
| II* | Fixed | Free | 275 psi | 5,382 psi |
| III** | Fixed | Fixed | 0 psi | 12,082 psi |

* Note: Anchor #1 is located at Node Point #5.
Anchor #2 is located at Node Point #40.

** Note: Anchor #1 is located at Node Point #4.
Anchor #2 is located at Node Point #40

The following calculations are computer input information for the earthquake analysis of 2 in. and 3 in. encased lines in the AW-120 Tank Farm. Typical cases are shown on page 7. Earthquake loading is taken to be a static .75 g vertical and 1.125 g horizontal.

Pipe Summary

| Pipe Size | Wt/Ft | Wt/Ft ($H_2O$) | SG | Total Wt/Ft | Area of Metal |
|---|---|---|---|---|---|
| 2 in. Sch 40 pipe | 3.653 | 1.453 | 1.7 | 6.12 lb/ft | 1.074 $in^2$ |
| 3 in. Sch 40 pipe | 7.58 | 3.2 | 1.7 | 13.02 lb/ft | 2.228 $in^2$ |



9413147.0069

Earthquake Loading

| | Vertical Loading (Wt + EQ) | Horizontal Loading |
|---|---|---|
| 2" pipe | (1.75 g)( 6.12) = 10.71 | (1.125 g)( 6.12) = 6.885 LB/FT |
| 3" pipe | (1.75 g)(13.02) = 22.765 | (1.125 g)(13.02) = 14.647 LB/FT |

The vertical load is applied to the piping as a weight density in the MEL-21 program:

Weight Density = Wt/12 AM (e.p. 5.4 page 58)

Where:

Wt = Total unit weight (lb/ft)

AM = Cross-sectional area of pipe wall ($in^2$)

(1) $\frac{\text{Weight Density}}{\text{of 2 in. Pipe}} = \frac{10.71}{(12)(1.074)} = .331\ lb/in^3$ Vertical Load

(2) $\frac{\text{Weight Density}}{\text{of 3 in. Pipe}} = \frac{22.765}{(12)(2.229)} = .351\ lb/in^3$ Vertical Load

The horizontal load is applied to the piping as a uniform horizontal force (lb/in).

(1) $\frac{\text{Uniform Horizontal Force}}{\text{on the 2 in. Pipe}} = \frac{6.885}{12} = .574$ lb/in Horizontal Load

(2) $\frac{\text{Uniform Horizontal Force}}{\text{on the 3 in. Pipe}} = \frac{14.647}{12} = 1.22$ lb/in Horizontal Load

The end conditions on the piping is assumed to be:

(1) Fixed-Fixed
(2) Free-Free
(3) Fixed-Free
(4) Free-Fixed



9413147.0070

The encasement lines will now be checked for earthquake. The highest stresses are believed to be present in the smallest lines (i.e. the 4 in. encasements). A typical bend configuration is shown on page 8:

The vertical load is applied to the piping as a weight density.

$$\text{Weight Density (4 in. Pipe)} = \frac{(10.79\ \text{lb/ft})(1.75\ g\ \text{EQ Ldg.})}{(12\ \text{in/ft})(3.17\ \text{in}^2)} = .497\ \text{lb/in}^3$$

Total weight density = WD 2 in. pipe + WD 4 in. pipe

Total weight density = (.831 (from Pg. 11 + .497) = $\underline{1.328\ \text{lb/in}^3}$

The horizontal earthquake load is applied to the piping as a uniform horizontal force (lb/in).

Total horizontal force = (HF 2 in. pipe + HF 4 in. pipe)

$$\text{Total Horizontal Force} = .574\ (\text{from pg. 11}) + \frac{(10.79\ \text{lb/ft})(1.125)\ \text{EQ Ldg.}}{12\ \text{in/ft}}$$

THF = (.574 + 1.01) = 1.59 lb/in

The end conditions on the piping are assumed to be: Fixed-Fixed.

## Part II. Straight Pipe Analysis

The objective of these calculations is to determine the effects of earthquake on the straight sections of the 4 in. and 6 in. encasement in the B-120 and B-130 Tank Farms. The formulas and assumptions are the same as those used in document JABE-VITRO-04.

The following assumptions are made:

(1) The buried encasement lines deform with ground deformation and offer negligible resistance.

(2) The soil is elastic and homogeneous.

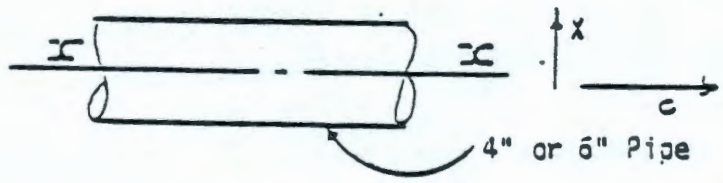


The displacement of the pipe will satisfy the equation:

$$\frac{\partial^2 X}{\partial T^2} = C^2 \frac{\partial^2 X}{\partial x^2}$$

where:

$x$ = Longitudinal axis of the pipe.

$X$ = Displacement component normal to $x$

$C$ = Ground wave velocity parallel to $x$

The curvature of the pipe = $\phi = \dfrac{\partial^2 X}{\partial x^2} = \dfrac{\ddot{X}}{C^2}$

where:

$\ddot{X}$ is the acceleration of the soil normal to $x$

The axial strain = $\varepsilon = \dfrac{\dot{X}}{C}$

where:

$\dot{X}$ = soil velocity parallel to $x$



9413147.0072

Find the maximum curvature of the pipe due to earthquake loads as follows:

$$\phi \max = \frac{\partial^2 X}{\partial x^2}\Bigg|_{\max} = \frac{\ddot{X}\max}{Vs^2}$$

where:

$Vs$ = Shear wave velocity = 550 ft/sec (Ref JABE-VITRO-04)

$\ddot{X}$ max = Maximum soil acceleration = .25 g

$$\therefore \phi \text{ Max.} = \frac{(.25)(32.2)}{(550)^2} = \underline{.267 \times 10^{-4} \text{ ft}^{-1}} \longleftarrow \phi \text{ max.}$$

Find the maximum axial strain due to earthquake loads as follows:

A. Maximum strain due to longitudinal waves is:

$$\varepsilon \text{ Long. Max.} = \frac{\dot{X} \text{ Max}}{Vp}$$

where:

$Vp$ = Longitudinal wave velocity = 1,200 ft/sec (Ref JABC-VITRO-04)

$\dot{X}$ Max. = 10 in/sec

$$\therefore \varepsilon \text{ Long. Max.} = \frac{10 \text{ in/sec}}{(1{,}200)(12) \text{ in/sec}} = \underline{.694 \times 10^{-3} \text{ in/in}} \longleftarrow \varepsilon \text{ Long. Max.}$$

B. Maximum strain due to shear waves:

If a shear wave travels at an angle $\theta$ to the longitudinal axis of the pipeline then the component of velocity parallel to the pipeline is:

$$\dot{X} = 10 \sin\theta \text{ in/sec}$$

The apparent wave velocity along the pipeline is:

$$C = \frac{Vs}{\cos\theta} = \frac{550}{\cos\theta} \text{ ft/sec}$$

The axial strain due to a shear wave is:

$$\varepsilon \text{ Shear Max.} = \frac{\dot{X}}{C} = \frac{10}{(12)(550)} \sin\theta \cos\theta$$

for $\theta = 45^0$

$$\varepsilon \text{ Shear Max.} = \frac{10}{(12)(550)} (.707)(.707) = \underline{.758 \times 10^{-3} \text{ in/in}}$$



9413117.0078

The maximum axial stress due to earthquake is calculated as follows:

$\sigma$ axial = $(E)(\varepsilon)$max.

where:

$E$ = Young's Modulus = $27.9 \times 10^6$ psi

$\varepsilon$ max = Max axial strain = $.758 \times 10^{-3}$ in/in (see B above)

$\therefore$ $\sigma$ axial = $(27.9 \times 10^6)(.758 \times 10^{-3})$ = <u>21,148 psi</u>

The maximum bending stress due to earthquake is calculated as follows:

Given that:

(1) Curvature = $\phi$ = M/EI

(2) $\sigma_B = \frac{MC}{I}$

from (1) above:

$M = \phi EI$

$\therefore \sigma_B = \frac{MC}{I} = \frac{\phi EIC}{I} = \phi EC$

$\therefore \sigma_B$ Max. = ($\phi$ Max.)(E)( C Max.)

where:

$\phi$ Max. = $.257 \times 10^{-4}$ (1/ft (see pg. 14)

C Max. = (for a 6 in. encasement line) = 6.625/2 = 3.3125 in.

$\therefore$ $\sigma$ B Max. = $(.257 \times 10^{-4})(1/12)(27.9 \times 10^6)(3.3125)$ = <u>2057 psi</u>



9413147.0074

Conclusions:

An earthquake is a faulted condition as defined in the ASME Boiler and Pressure Vessel Code, Section III, Division I, article F-1000, paragraph F1120. The maximum allowable stress as defined in this section is:

Allowable = (.7)(Su)

where:

Su = 60,000 psi (from Table I.1.1 for SA-106B CS welded pipe)

Allowable = (.7)(60,000) = 42,000 psi

The maximum stress due to a seismic event is:

Max. = axial + bending

where:

Axial = 21,148 psi (from pg. 15)

Bending = 205 psi (from pg. 15)

Max. = 21,148 + 205 = 21,353 psi  Max.

Max.  Allowable

4 and 6 in. encasement lines that are directly buried will survive a seismic event.

Most tank farm process lines are wrapped with a layer of bubble wrap, 1/2 in. thick, before being sprayed with an insulating foam. A 1/2 in. void is therefore created between the pipeline and the ground. This void effectively isolates the pipeline from axial seismic stresses. The only stresses transferred to these lines are bending stresses which are negligible. ( 205 psi).

## Part III. Relative Building and Tank Motion

Dr. Ming-Du Chang has investigated the effects of relative building and tank motion in the B-120 Tank Farm that would occur as a result of seismic activity. From this study he has concluded that the relative building and tank motion in the B-120 Tank Farm would not produce any significant increase in piping stresses. Dr. Chang's work, titled "Differential Movements at support points" is presented in Appendix C of this report.



9413147.0075

## References

1. Power Piping, ANSI B31.1.0, 1977 edition.

2 J. A. Olson and R. V. Cramer, MEL-21 Pipe Flexibility Analysis, San Francisco Bay Naval Shipyard, Mare Island.

3. K. H. Tanaka, Functional Design Criteria Additional High-Level Waste Storage Facilities (Project B-120), ARH-CD-362 dated June 30, 1975.

4. Piping and Equipment Seismic Study, Building 225B of the Waste Encapsulation Facility, Hanford Atomic Energy Reservation, JABE-VITRO-02 dated April 1971.

5. Seismic Analysis of Concrete Encasements for Proposed Buried Wastelines Area 200 East, Hanford Washington JABE-VITRO-04 dated June 1972.

9413147.0076

1586G

TABLE 1

| Item No | Pipeline or Jumper Designation | Piping Plan Drawing No. | Piping Support Drawing No. | Isometric Sketch | Computer Problem Name | Pipe / Wall Dia / Thick | Design Temp (°F) | Max Allow Stress (PSI) | Max Computed Stress (PSI) |
|---|---|---|---|---|---|---|---|---|---|
| 1 | 3" SN-262-M25 | | | | | 3.5/.216 | | | |
| | 6" SN-262-M26 Enc. | H-2-70399 | H-2-70424 | ES-B120-M2 | AW120-1 | 6.625/.280 | + 340°F | 37500 | 7697 |
| 2 | 3" SN-261-M25 | | | | | 3.5/.216 | | | |
| | 6" SN-261-M25 Enc. | H-2-70399 | H-2-70424 | ES-B120-M2 | AW120-1 | 6.625/.280 | + 340°F | 37500 | By Similarity to 1 |
| 3 | 3" SN-265-M25 | | | | | 3.5/.216 | | | |
| | 6" SN-265-M25 Enc. | H-2-70399 | H-2-70424 | ES-B120-M2 | AW120-2 | 6.625/.280 | + 340°F | 37500 | 20560 |
| 4 | 3" SN-266-M25 | | | | | 3.5/.216 | | | |
| | 6" SN-266-M25 Enc. | H-2-70399 | H-2-70424 | ES-B120-M2 | AW120-2 | 6.625/.280 | + 340°F | 37500 | By Similarity to 3 |
| 5 | 2" SL-161-M25 | | | | | 2.375/.154 | | | |
| | 4" SL-161-M25 Enc. | H-2-70399 | H-2-70424 | ES-B120-M2 | AW120-6 | 4.5/.237 | + 340°F | 37500 | 3030 |
| 6 | 2" SL-162-M25 | | | | | 2.375/.154 | | | |
| | 4" SL-162-M25 Enc. | H-2-70399 | H-2-70424 | ES-B120-M2 | AW120-6 | 4.5/.237 | + 340°F | 37500 | By Similarity to 5 |
| 7 | 2" SL-165-M25 | | | | | 2.375/.154 | | | |
| | 4" SL-165-M26 Enc. | H-2-70399 | H-2-70424 | ES-B120-M2 | AW120-7 | 4.5/.237 | + 340°F | 37500 | 22797 |
| 8 | 2" SL-168-M25 | | | | | 2.375/.154 | | | |
| | 4" SL-168-M26 Enc. | H-2-70398 | H-2-70423 | ES-B120-M2 | AW120-8 | 4.5/.237 | + 340°F | 37500 | 19170 |

TABLE 1 (Continued)

| Item No | Pipeline or Jumper Designation | Piping Plan Drawing No. | Piping Support Drawing No. | Isometric Sketch | Computer Problem Name | Pipe / Wall Dia / Thick | Design Temp (°F) | Max Allow Stress (PSI) | Max Computed Stress (PSI) |
|---|---|---|---|---|---|---|---|---|---|
| 9 | 2" SL-167-M25 | | | | | 2.375/.154 | | | |
| | 4" SL-167-M26 Enc. | H-2-70398 | H-2-70423 | ES-B120-M2 | AW120-8 | 4.5/.237 | + 340°F | 37500 | By Similarity to 8 |
| 10 | 3" SN-272-M25 | | | | | 3.5/.216 | | | |
| | 6" SN-272-M26 Enc. | H-2-70399 | H-2-70424 | ES-B120-M2 | AW120-4 | 6.625/.280 | + 340°F | 37500 | 6454 |
| 11 | 3" PW-401-M25 | | | | | 3.5/.216 | | | |
| | 6" PW-401-M26 Enc. | H-2-70397 | H-2-70422 | ES-B120-M6 | AW120-13 | 6.625/.280 | + 340°F | 37500 | 15417 |
| 12 | 2" PW-461-M25 | | | | | 2.375/.154 | | | |
| | 4" PW-461-M26 Enc. | H-2-70399 | H-2-70424 | ES-B120-M6 | AW120-15 | 4.5/.237 | 340°F | 37500 | 8427 |
| 13 | 2" PW-462-M25 | | | | | 2.375/.154 | | | |
| | 4" PW-462-M26 Enc. | H-2-70399 | H-2-70424 | ES-B120-M6 | AW120-15 | 4.5/.237 | 340°F | 37500 | By Similarity to 12 |
| 14 | 2" PW-463-M25 | | | | | 2.375/.154 | | | |
| | 4" PW-463-M26 Enc. | H-2-70399 | H-2-70424 | ES-B120-M6 | AW120-15 | 4.5/.237 | 340°F | 37500 | By Similarity to 12 |
| 15 | 2" PW-464-M25 | | | | | 2.375/.154 | | | |
| | 4" PW-464-M26 Enc. | H-2-70399 | H-2-70424 | ES-B120-M6 | AW120-15 | 4.5/.237 | 340°F | 37500 | By Similarity to 12 |
| 16 | 2" PW-465-M25 | | | | | 2.375/.154 | | | |
| | 4" PW-465-M26 Enc. | H-2-70400 | H-2-70425 | ES-B120-M6 | AW120-15 | 4.5/.237 | 340°F | 37500 | By Similarity to 12 |

TABLE 1 (Continued)

| Item No | Pipeline or Jumper Designation | Piping Plan Drawing No. | Piping Support Drawing No. | Isometric Sketch | Computer Problem Name | Pipe / Wall Dia / Thick | Design Temp (°F) | Max Allow Stress (PSI) | Max Computed Stress (PSI) |
|---|---|---|---|---|---|---|---|---|---|
| 17 | 2" PW-466-M25 | | | | | 2.375/.154 | | | |
| | 4" PW-466-M26 Enc. | H-2-70400 | H-2-70425 | ES-B120-M6 | AW120-15 | 4.5/.237 | 340°F | 37500 | By Similarity to 12 |
| 18 | 2" PW-471-M25 | | | | | 2.375/.154 | | | |
| | 4" PW-471-M26 Enc. | H-2-70399 | H-2-70424 | ES-B120-M6 | AW120-16 | 4.5/.237 | 340°F | 37500 | 20543 |
| 19 | 2" PW-472-M25 | | | | | 2.375/.154 | | | |
| | 4" PW-472-M26 Enc. | H-2-70399 | H-2-70424 | ES-B120-M6 | AW120-16 | 4.5/.237 | 340°F | 37500 | By Similarity to 16 |
| 20 | 2" PW-473-M25 | | | | | 2.375/.154 | | | |
| | 4" PW-473-M26 Enc. | H-2-70399 | H-2-70424 | ES-B120-M6 | AW120-16 | 4.5/.237 | 340°F | 37500 | By Similarity to 16 |
| 21 | 2" PW-474-M25 | | | | | 2.375/.154 | | | |
| | 4" PW-474-M26 Enc. | H-2-70399 | H-2-70424 | ES-B120-M6 | AW120-16 | 4.5/.237 | 340°F | 37500 | By Similarity to 16 |
| 22 | 2" PW-475-M25 | | | | | 2.375/.154 | | | |
| | 4" PW-475-M26 Enc. | H-2-70400 | H-2-70425 | ES-B120-M6 | AW120-16 | 4.5/.237 | 340°F | 37500 | By Similarity to 16 |
| 23 | 2" PW-476-M25 | | | | | 2.375/.154 | | | |
| | 4" PW-476-M26 Enc. | H-2-70400 | H-2-70425 | ES-B120-M6 | AW120-16 | 4.5/.237 | 340°F | 37500 | By Similarity to 16 |
| 24 | 3" SN-270-M25 | | | | | 3.5/.216 | | | |
| | 6" SN-270-M26 Enc. | H-2-70398 | H-2-70423 | ES-B120-M3 | AW120-3 | 6.625/.280 | 340°F | 37500 | 17959 |

TABLE 1 (Continued)

| Item No | Pipeline or Jumper Designation | Piping Plan Drawing No. | Piping Support Drawing No. | Isometric Sketch | Computer Problem Name | Pipe / Wall Dia / Thick | Design Temp (°F) | Max Allow Stress (PSI) | Max Computed Stress (PSI) |
|---|---|---|---|---|---|---|---|---|---|
| 25 | 3" SN-269-M25 | | | | | 3.5/.216 | | | |
| | 6" SN-269-M26 Enc. | H-2-70398 | H-2-70423 | ES-B120-M3 | AW120-3 | 6.625/.280 | 340°F | 37500 | By Similarity to 24 |
| 26 | 3" SN-220-M25 | | | | | 3.5/.216 | | | |
| | 6" SN-220-M26 Enc. | H-2-70398 | H-2-74023 | ES-B120-M3 | AW120-5 | 6.625/.280 | 340°F | 37500 | 17536 |
| 27 | 3" SN-219-M25 | | | | | 3.5/.216 | | | |
| | 6" SN-219-M26 Enc. | H-2-70398 | H-2-70423 | ES-B120-M3 | AW120-5 | 6.625/.280 | 340°F | 37500 | By Similarity to 26 |
| 28 | 10" DN-335-M24 | | | | | 10.75/.365 | | | |
| | 12" DN-335-M26 Enc. | H-2-70398 | H-2-70423 | ES-B120-M3 | AW120-10 | 12.75/.406 | 340°F | 37500 | 17543 |
| 29 | 10" DN-334-M24 | | | | | 10.75/.365 | | | |
| | 12" DN-334-M26 Enc. | H-2-70398 | H-2-70423 | ES-B120-M3 | AW120-10 | 12.75/.406 | 340°F | 37500 | By Similarity to 28 |
| 30 | 3" V008-M21 | | | | | 3.5/.216 | | | |
| | 6" V008-M26 Enc. | H-2-70400 | H-2-70422 | ES-B120-M3 | AW120-11 | 6.625/.280 | 340°F | 37500 | 12127 |
| 31 | 3" V005-M21 | | | | | 3.5/.216 | | | |
| | 6" V005-M26 Enc. | H-2-70400 | H-2-70422 | ES-B120-M3 | AW120-11 | 6.625/.280 | 340°F | 37500 | By Similarity to 30 |
| 32 | 3" V007-M21 | | | | | 3.5/.216 | | | |
| | 6" V007-M26 Enc. | H-2-70400 | H-2-70422 | ES-B120-M3 | AW120-11 | 6.625/.280 | 340°F | 37500 | By Similarity to 30 |

TABLE 1 (Continued)

| Item No | Pipeline or Jumper Designation | Piping Plan Drawing No. | Piping Support Drawing No. | Isometric Sketch | Computer Problem Name | Pipe / Wall Dia / Thick | Design Temp (°F) | Max Allow Stress (PSI) | Max Computed Stress (PSI) |
|---|---|---|---|---|---|---|---|---|---|
| 33 | 3" DR-301-M24 | | | | | 3.5/.216 | | | |
| | 6" DR-301-M26 Enc. | H-2-70397 | H-2-70422 | ES-0120-M13 | AW120-17 | 6.625/.280 | 340°F | 37500 | 15555 |
| 34 | 3" SN-267-M25 | | | | | 3.5/.216 | | | |
| | 6" SN-267-M26 Enc. | H-2-70399 | H-2-70424 | ES-0120-M13 | AW120-18 | 6.625/.280 | 340°F | 37500 | 5052 |
| 35 | 3" SN-268-M25 | | | | | 3.5/.216 | | | |
| | 6" SN-268-M26 Enc. | H-2-70399 | H-2-70424 | ES-0120-M13 | AW120-19 | 6.615/.280 | 340°F | 37500 | 10353 |
| 36 | 3" DR-317-M24 | | | | | 3.5/.216 | | | 15555 |
| | 6" DR-317-M26 Enc. | H-2-70397 | H-2-70422 | ES-0120-M13 | AW120-17 | 6.625/.280 | 340°F | 37500 | |
| 37 | 3" DR-307-M24 | | | | | 3.5/.216 | | | |
| | 6" DR-307-M26 Enc. | H-2-70397 | H-2-70422 | ES-0120-M13 | AW120-17 | 6.625/.280 | 340°F | 37500 | By Similarity to 36 |
| 38 | 3" DR-311-M24 | | | | | 3.5/.216 | | | |
| | 6" DR-311-M26 Enc. | H-2-70397 | H-2-70422 | ES-0120-M13 | AW120-17 | 6.625/.280 | 340°F | 37500 | By Similarity to 36 |
| 39 | 3" SN-263-M25 | | | | | 3.5/.216 | | | |
| | 6" SN-263-M26 Enc. | H-2-70399 | H-2-70424 | ES-0120-M13 | AW120-20 | 6.625/.280 | 340°F | 37500 | 7672 |
| 40 | 2" SL-164-M25 | | | | | 2.375/.154 | | | |
| | 4" SL-164-M26 Enc. | H-2-70399 | H-2-70424 | ES-0120-M13 | AW120-21 | 4.5/.237 | 340°F | 37500 | 5974 |
| 41 | 2" SL-163-M25 | | | | | 2.375/.154 | | | |
| | 4" SL-163-M26 Enc. | H-2-70399 | H-2-70424 | ES-0120-M13 | AW120-21 | 4.5/.237 | 340°F | 37500 | By Similarity to 40 |

TABLE 1 (Continued)

| Item No | Pipeline or Jumper Designation | Piping Plan Drawing No. | Piping Support Drawing No. | Isometric Sketch | Computer Problem Name | Pipe / Wall Dia / Thick | Design Temp (°F) | Max Allow Stress (PSI) | Max Computed Stress (PSI) |
|---|---|---|---|---|---|---|---|---|---|
| 42 | 2" SL-166-M25 | | | | | 2.375/.154 | | | |
| | 4" SL-166-M26 Enc. | H-2-70400 | H-2-70424 | ES-B120-M13 | AW120-23 | 4.5/.237 | 340°F | 37500 | 5437 |
| 43 | 3" SN-264-M25 | | | | | 3.5/.216 | | | |
| | 6" SN-264-M26 Enc. | H-2-70399 | H-2-70424 | ES-B120-M13 | AW120-22 | 6.625/.280 | 340°F | 37500 | 6607 |
| 44 | Jumper #21 | H-2-70457 | H-2-70431 | ES-B120-M10 | Problem #21 | 3.5/.216 | 340°F | 37500 | 35857 |
| 45 | Jumper #22 | H-2-70458 | H-2-70431 | ES-B120-M10 | Problem #22 | 3.5/.216 | 340°F | 37500 | 18925 |
| 46 | Jumper #23 | H-2-70449 | H-2-70429 | ES-B120-M10 | Problem #23 | 3.5/.216 | 340°F | 37500 | 17267 |
| 47 | Jumper #24 | H-2-70447 | H-2-70429 | ES-B120-M10 | Problem #24 | 3.5/.216 | 340°F | 37500 | 11062 |
| 48 | Jumper #25 | H-2-70454<br>H-2-70455<br>H-2-70456 | H-2070431 | ES-B120-M10 | Problem #25 | 3.5/.216 | 340°F | 37500 | 28744 |
| 49 | Jumper #26 | H-2-70469 | H-2-70432 | ES-B120-M10 | Problem #26 | 3.5/.216 | 340°F | 37500 | 11430 |
| 50 | Jumper #39 | H-2-70445 | H-2-70429 | ES-B120-M10 | Problem #39 | 3.5/.216 | 340°F | 37500 | 23276 |
| 51 | Jumper #40 | H-2-70466<br>H-2-70467<br>H-2-70468 | H-2-70432 | ES-B120-M10 | Problem #40 | 3.5/.216<br>2.375/.154 | 340°F | 37500 | 18194 |

TABLE 1 (Continued)

| Item No | Pipeline or Jumper Designation | Piping Plan Drawing No. | Piping Support Drawing No. | Isometric Sketch | Computer Problem Name | Pipe / Wall Dia / Thick | Design Temp (°F) | Max Allow Stress (PSI) | Max Computed Stress (PSI) |
|---|---|---|---|---|---|---|---|---|---|
| 52 | Jumper #27 | H-2-70471 | H-2-70464 | ES-0120-M9 | Problem #27 | 3.5/.216 | 340°F | 37500 | 21206 |
| 53 | Jumper #28 | H-2-70472 | H-2-70464 | ES-0120-M9 | Problem #28 | 3.5/.216 | 340°F | 37500 | 9209 |
| 54 | Jumper #29 | H-2-70473 | H-2-70464 | ES-0120-M9 | Problem #29 | 3.5/.216 | 340°F | 37500 | 9078 |
| 55 | Jumper #30 | H-2-70541 | H-2-70540 | ES-0120-M9 | Problem #30 | 4.5/.237 | 340°F | 37500 | 11498 |
| 56 | Jumper #31 | H-2-75042 | H-2-70540 | ES-0120-M9 | Problem #31 | 3.5/.216 | 340°F | 37500 | 5219 |
| 57 | Jumper #32 | H-2-70543 | H-2-70540 | ES-0120-M9 | Problem #32 | 3.5/.216 | 340°F | 37500 | 11577 |
| 58 | Jumper #33 | H-2-70544 | H-2-70540 | ES-0120-M9 | Problem #33 | 3.5/.216 | 340°F | 37500 | 9560 |
| 59 | Jumper #35 | H-2-70546 | H-2-70540 | ES-0120-M9 | Problem #35 | 3.5/.216 | 340°F | 37500 | 8751 |
| 60 | Jumper #36 | H-2-70441 | H-2-70461 | ES-0120-M8 | Problem #36 | 2.375/.154 | 340°F | 37500 | 5547 |
| 61 | Jumper #37 | H-2-70442 | H-2-70461 | ES-0120-M8 | Problem #37 | 2.375/.154 | 340°F | 37500 | 6161 |
| 62 | Jumper #38 | H-2-70462 | H-2-70461 | ES-0120-M8 | Problem #38 | 3.5/.216 | 340°F | 37500 | 12518 |
| 63 | Jumper #41 | H-2-70460<br>H-2-65125 | H-2-70465 | ES-0120-M8 | Problem #41 | 3.5/.216 &<br>2.375/.154 | 340°F | 37500 | 18416 |

TABLE 1 (Continued)

| Item No | Pipeline or Jumper Designation | Piping Plan Drawing No. | Piping Support Drawing No. | Isometric Sketch | Computer Problem Name | Pipe / Wall Dia / Thick | Design Temp (°F) | Max Allow Stress (PSI) | Max Computed Stress (PSI) |
|---|---|---|---|---|---|---|---|---|---|
| 64 | Jumper #42 | H-2-70459<br>H-2-65127<br>H-2-65126 | H-2-70465 | ES-0120-H0 | Problem #42 | 3.5/.216 &<br>2.375/.154 | 340°F | 37500 | 20240 |
| 65 | Jumper #43 | H-2-70450<br>H-2-69399 | H-2-70461 | ES-0120-H0 | Problem #43 | 3.5/.216 | 340°F | 37500 | 12909 |
| 66 | Jumper #44 | H-2-70535<br>H-2-70437<br>Assy #2 | | ES-0120-H7 | Problem #44 | 2.375/.154<br>& 1.9/.145 | 340°F | 37500 | 18227 |
| 67 | Jumper #45 | H-2-70434<br>H-2-70433 | | ES-0120-H7 | Problem #45 | 2.375/.154<br>& 3.5/.216 | 340°F | 37500 | 24300 |

#1506G

DESIGN ANALYSIS

FOR
LOCATION
SUBJECT

PAGE
JOB NO.
DATE
BY
CHECKED BY

9413147.0085

APPENDIX C

VITRO ENGINEERING CORPORATION
Architects & Engineers

# INTER-OFFICE MEMORANDUM

DATE June 16, 1977

TO A. W. Akerson (LOCATION OR DEPARTMENT)

FROM Ming-Du Chang MDC (LOCATION OR DEPARTMENT)

SUBJECT Piping Differential Movements at support point due to seismic load for B-120

Reference: Letter, A.W. Akerson to J.H. Kleinpeter, dated May 10, 1977

Based on assumptions described in the attached computations, the piping differential movements at support point have been completed. These differential movements at support point were very small.

Attached is a copy of computation for differential movement point due to seismic load.

MC:dn

Attachment

cc: P. Felise
JH Kleinpeter
EV Norris
EE Smith
RR Wyer
Central File



An Automation Industries, Inc. Company

9413147.0086

DESIGN ANALYSIS

FOR: BRUCO
LOCATION:
SUBJECT: Different displacement of piping supt.

PAGE: 1
JOB NO:
DATE:
BY:
CHECKED BY:

For different displacement at piping supt. point due to earthquake, there are following assumptions to be made

A. Seismic Analysis result from "Analysis of Underground Waste Storage Tank 241-AW at Hanford, Washington.. TA3E-Vitro-07 are used.

B. Assumed that stiffness of piping system is negligible in analyzing soil-structure interaction.

C. The critical anchor points at close to tank or building will be considered, because their difference of mass is large.

D. The interaction between tanks was not considered in the analysis

E. The vertical response assumed to be small



9413147.0087

# DESIGN ANALYSIS

FOR [illegible]
LOCATION
SUBJECT Different displacement at piping supp.

PAGE 2
JOB NO. [illegible]
DATE [illegible]
BY [illegible]
CHECKED BY [illegible]

| point | (sec) time | (ft) R-Displ. | (sec) time | (ft) T-Displ. | point | time | R-Displ. | time | T-Displ. |
|---|---|---|---|---|---|---|---|---|---|
| 17 | 6.5 | -5.842E-2 | 6.5 | 5.593E-2 | 4 | 6.5 | -5.646E-2 | 6.5 | 5.655E-2 |
| 19 | 6.5 | " | 6.5 | " | 7 | " | " | " | " |
| 8 | 6.5 | -5.844E-2 | 6.5 | 5.632E-2 | 5 | " | " | " | " |
| 9 | 6.5 | -5.958E-2 | 6.5 | 5.613E-2 | 2 | " | " | " | " |
| 27 | 6.5 | -5.958E-2 | 6.5 | 5.613E-2 | 21 | " | " | " | " |
| 18 | " | " | " | " | 22 | 6.5 | -5.848E-2 | 6.5 | 5.637E-2 |
| 20 | " | " | " | " | 12 | " | " | " | " |
| 6 | " | " | " | " | 14 | 6.5 | -5.240E-2 | 6.5 | 5.746E-2 |
| 25 | 6.5 | -5.461E-2 | 6.5 | 5.775E-2 | 11 | 6.5 | -5.245E-2 | 6.5 | 5.245E-2 |
| 26 | " | " | " | " | 3 | " | " | " | " |
| 24 | " | -5.853E-2 | " | 5.755E-2 | | | | | |
| 16 | " | " | " | " | | | | | |
| 15 | " | " | " | " | | | | | |
| 10 | " | " | " | " | | | | | |
| 13 | " | " | " | " | | | | | |
| 1 | 6.5 | -5.846E-2 | 6.5 | 5.205E-2 | | | | | |

point : Referring DWG H-2-70395



9413147.0088

# DESIGN ANALYSIS

FOR ARHCO
LOCATION
SUBJECT Differential displacement of piping system.

PAGE 3
JOB NO.
DATE 5/6/88
BY Chief
CHECKED BY

(1) Central pump pit to Leak detection ( refering to H-2-70425 & H-2-7042

For 2" PW-465-M25
2" PW-466-M25
2" PW-463-M25
2" PW-464-M25
2" PW-461-M25
2" PW-462-M25

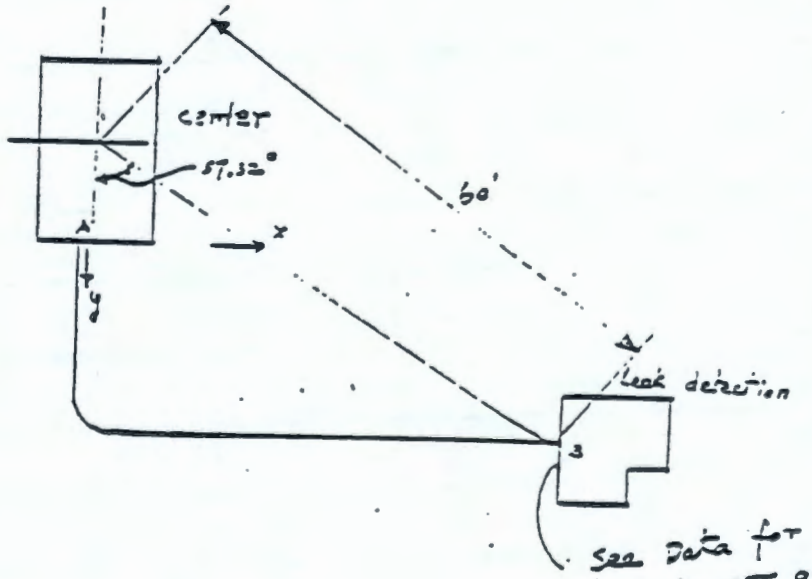


differential movement (2 to 3)

For y Excitation $\Delta Y = \left[5.248\times10^{-2} - (6.064\times10^{-2}\cos^2 57.32 + 6.104\times10^{-2}\sin^2 57.32)\right]\times 12$

$= 2.9326\times10^{-2}$ in.

For X Excitation $\Delta X = \left[5.85\times10^{-2} - (6.064\times10^{-2}\cos^2 32.68 + 6.104\times10^{-2}\sin^2 32.68)\right]\times$

$= 2.703\times10^{-2}$ in



An Automation Industries, Inc. Company

9413147.0089

DESIGN ANALYSIS

FOR ADUCO
LOCATION
SUBJECT Different displacement at piping Cpts

PAGE
JOB NO.
DATE
BY
CHECKED BY

(2) Central pump pit to Annulus pump (Referring to H-2-70424 & H-2-70425

For 2" PW - 471 - M25
PW - 472 - M25
PW - 473 - M23
PW - 474 - M25
PW - 475 - M25
PW - 476 - M25

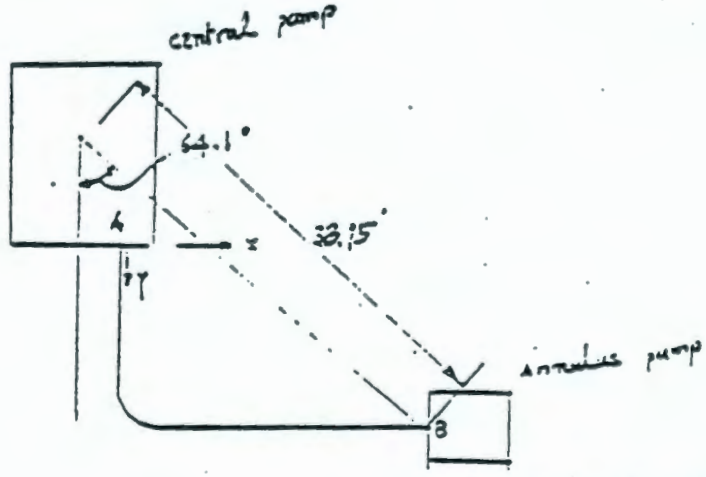


See Data for Node 335

Differential movement (A to B)

For y direction Excitation $\Delta y = \left[ 5.248 \times 10^{-2} - \left( -5.929 \times 10^{-2} \cos^2 64.1 - 5.306 \times 10^{-2} \sin^2 64.1 \right) \right] \times 12$
$= 2.223 \times 10^{-3}$ in

For x Excitation $\Delta x = \left[ 5.85 \times 10^{-2} - \left( 5.929 \times 10^{-2} \sin^2 64.1 + 5.306 \times 10^{-2} \cos^2 64.1 \right) \right] \times$
$= 6.6638 \times 10^{-3}$ in



An Automation Industries Company

9413147.0090

DESIGN ANALYSIS

FOR 12400
LOCATION
SUBJECT Different displacement at piping system

PAGE 5
JOB NO. [illegible]
DATE 5/[illegible]/87
BY [illegible]
CHECKED BY [illegible]

(3) Central pump pit to valve pit (Referring to H-2-70425 & H-2-7[illegible]

(a) For 3" SN-266-M25 & 3" SN-265-M25

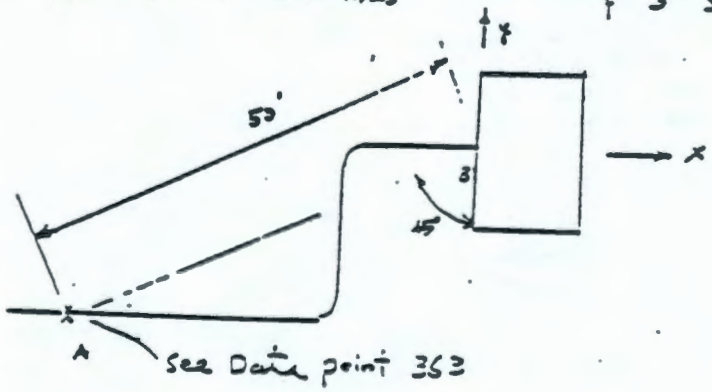


X anchor point

differential movement (A to B)

For Y Excitation $\Delta Y = \left[5.35\times10^{-2} - \left(5.112\times10^{-2}\cos^2 45 + 5.744\times10^{-2}\sin^2 45\right)\right]\times 12 = 1.32\times10^{-2}$

For X Excitation $\Delta X = \left[5.35\times10^{-2} - \left(5.112\times10^{-2}\cos^2 45 + 5.744\times10^{-2}\sin^2 45\right)\right]\times 12 = 1.29\times10^{-2}$

(b) For 3" SN-264-M25 & 3" SN-263-M25

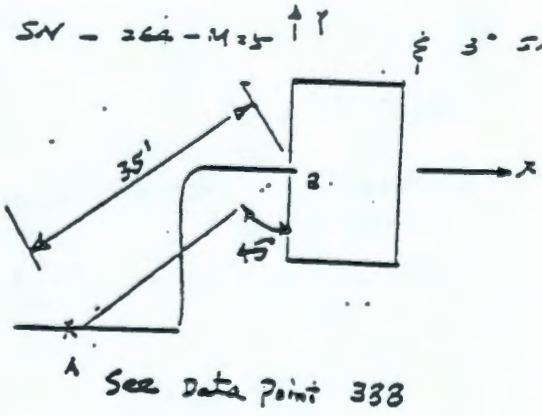


Different movement (A to B)

$\theta = 45$

For X Excitation $\Delta X = \left[5.35\times10^{-2} - \left(5.842\times10^{-2}\cos^2\theta + 5.573\times10^{-2}\sin^2\theta\right)\right]\times 12 = 1.57$

For Y Excitation $\Delta Y = \left[5.35\times10^{-2} - \left(5.842\times10^{-2}\sin^2\theta + 5.573\times10^{-2}\cos^2\theta\right)\right]\times 12 = 1.59\times$



9413147.0091

DESIGN ANALYSIS

FOR: [illegible]
LOCATION:
SUBJECT: Different displacement at piping supports

PAGE:
JOB NO.: [illegible]
DATE: 5/6/99
BY: [illegible]
CHECKED BY: [illegible]

(c) For 3" SN-262-M25 & 3" SN-261-M25

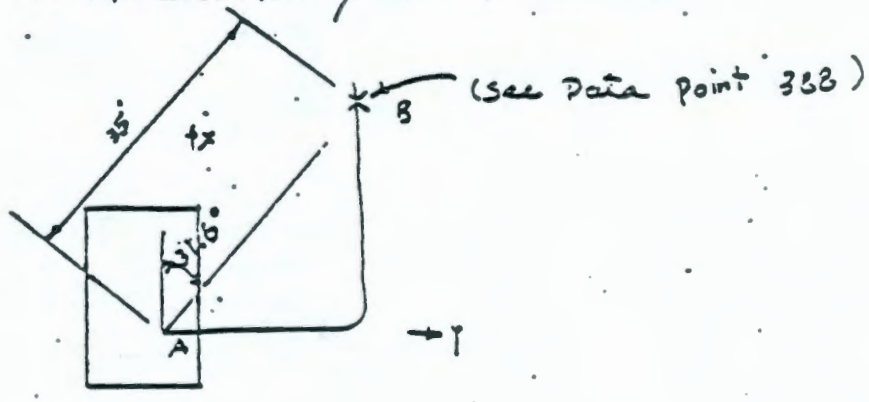


Differential movement (A to B) $\theta = 31.6$

$$\Delta y = [5.35\times10^{-2} - (5.353\times10^{-2}\times\cos^2\theta + 5.613\times10^{-2}\sin^2\theta]\times12$$
$$= 7.112\times10^{-3} \text{ inch}$$

$$\Delta x = [5.25\times10^{-2} - (5.353\times10^{-2}\times\sin^2\theta + 5.613\times10^{-2}\times\cos^2\theta]\times12$$
$$= 2.037\times10^{-2} \text{ inch}$$



An Automation Industries, Inc. Company

9413147.0092

DESIGN ANALYSIS

FOR: 3DWG
LOCATION:
SUBJECT: Differential displacement at piping Conn.

PAGE: 7
JOB NO.:
DATE:
BY:
CHECKED BY:

(4) From 242-A Building to 241-AW-A/B valve pit for 2" SL 168-M25 & 3" SL 167-M24

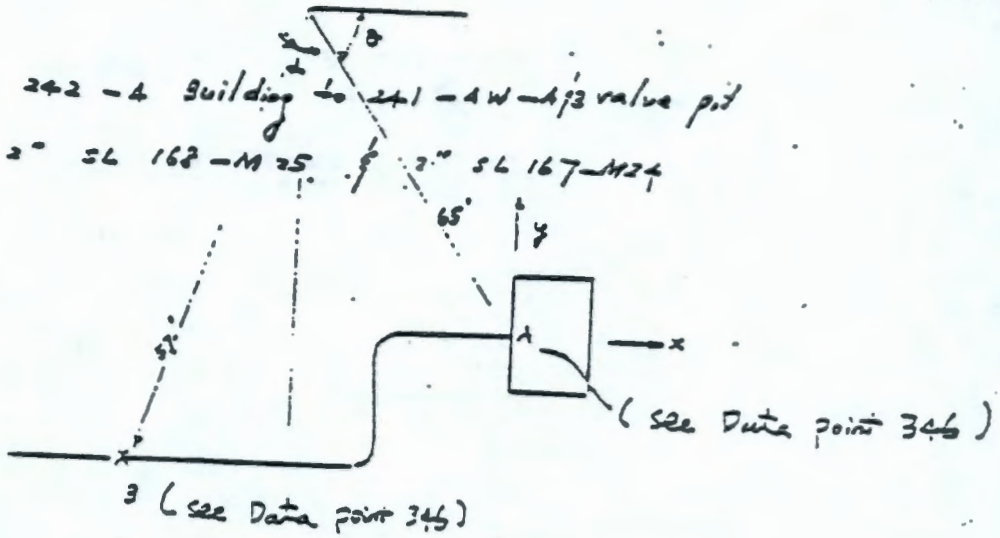


Different Movement $\theta = 49.0°$ $\alpha = 21.0°$

For X Excitation

$$\Delta X = \left[6.067\times10^{-2}\cos^2\theta + 6.123\times10^{-2}\sin^2\theta + 6.067\times10^{-2}\sin^2\alpha - 6.123\times10^{-2}\cos^2\alpha\right]x$$

$$= 1.847\times10^{-1}\ \text{IN}$$

$$\Delta Y = \left[6.067\times10^{-2}\sin^2\theta + 6.123\times10^{-2}\cos^2\theta - 6.067\times10^{-2}\cos^2\alpha - 6.123\times10^{-2}\sin^2\alpha\right]\times12$$

$$= 42\times10^{-3}\ \text{in}$$



9413147.0093

# DESIGN ANALYSIS

FOR: ARHCO
LOCATION:
SUBJECT: Different displacement at pipe [illegible]

PAGE: 3
JOB NO.: [illegible]
DATE: 5/1/[illegible]
BY: [illegible]
CHECKED BY: [illegible]

(5) Feed Pump

For 3" SN-269-M25 & 3" SN-270-M25

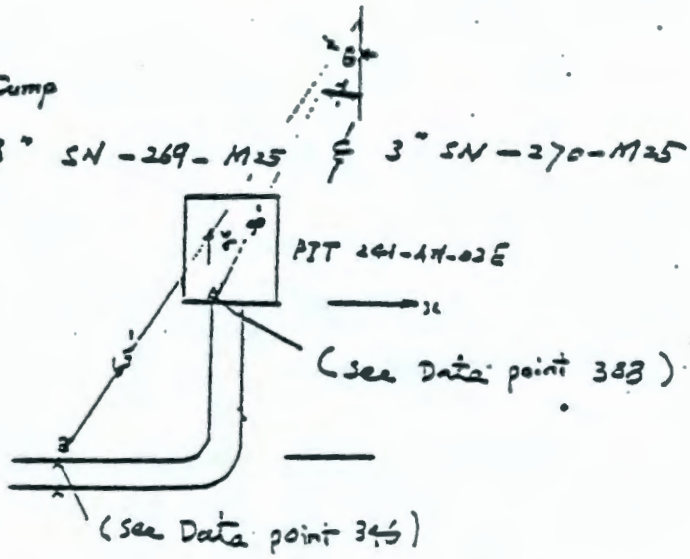


Different movement (A to 3) $\theta = 19.02°$ $\alpha = 11.76°$

$$\Delta x = \left[6.067\times10^{-2}\cos^2\theta + 6.128\times10^{-2}\sin^2\theta - 5.342\times10^{-2}\cos^2\alpha - 5.593\times10^{-2}\sin^2\alpha\right]\times12$$

$$= 2.902\times10^{-2} \text{ inch}$$

$$\Delta Y = \left[6.067\times10^{-2}\sin^2\theta + 6.128\times10^{-2}\cos^2\theta - 5.842\times10^{-2}\sin^2\alpha - 5.593\times10^{-2}\cos^2\alpha\right]\times12$$

$$= 6.218\times10^{-2} \text{ inch}$$



9413147.0094

DESIGN ANALYSIS

FOR ARHCO
LOCATION
SUBJECT Different displacement at piping supports

PAGE
JOB NO.
DATE 5/2/-7
BY
CHECKED BY

(5) From Purex tie-in to drain pit at tank #102

For 3" V009 - M21
3" V005 - M21
3" V008 - M21

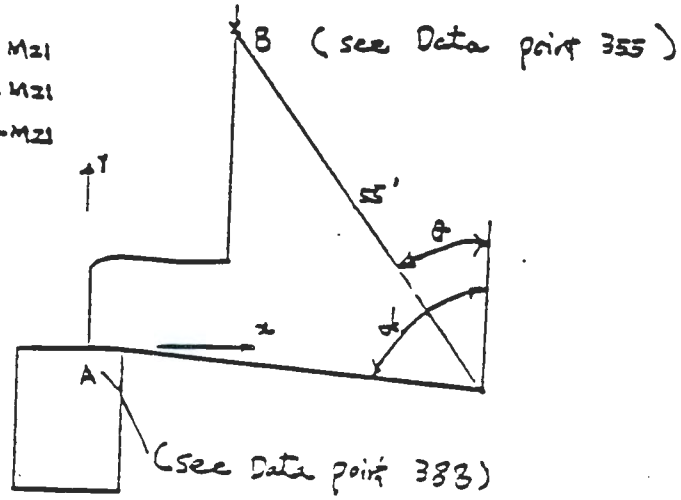


Different Movement $\theta = 63°$ $\alpha = 82.67°$

$$\Delta Y_1 = \left[6.064 \times 10^{-2} \cos^2\theta + 6.104 \times 10^{-2} \sin^2\theta - 5.558 \times 10^{-2} \cos^2\alpha - 5.613 \times 10^{-2} \sin^2\alpha\right] \times 12$$

$$= 5.39 \times 10^{-2} \text{ inch}$$

$$\Delta x = \left[6.064 \times 10^{-2} \sin^2\theta + 6.104 \times 10^{-2} \cos^2\theta - 5.558 \times 10^{-2} \sin^2\alpha - 5.612 \times 10^{-2} \cos^2\alpha\right] \times 12$$

$$= 2.79 \times 10^{-2} \text{ inch}$$

DESIGN ANALYSIS

FOR ARHCO
LOCATION
SUBJECT Different displacement of piping

PAGE
JOB NO.
DATE
BY
CHECKED BY

Referring to H-2-70423, 3" SN-270-M25 & 3" SN-269-M25

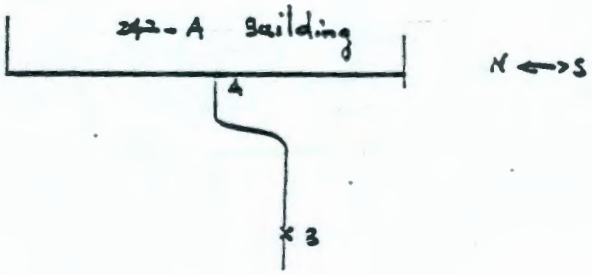


Due to lack of information of seismic analysis of 242-A-building, the simple approach is taken (considering 1st mode). The JASE-VIII Earthquake Analysis of the evaporator Facilities building 242-S is used

E-W Excitation Figure A 10

1st mode $T_1 = 0.105$

$\Rightarrow \Delta \doteq 0.02''$



9413147.0096

DESIGN ANALYSIS

FOR ARHCO
LOCATION 110 Tank Farm
SUBJECT Max Allowable Stress Table

PAGE 1 of 1
JOB NO. 513002
DATE 3-29-77
BY G Wyatt
CHECKED BY

These are the design conditions for the slurry and S in the 110 TK Farm (from ARHCO Document # CD-37)

2" Sch 40 CS ASTM A53 slurry piping

design pressure 400 psig } slurry
design temperature 200°F

design pressure 100 psig } steam (100 psi)
design temp 350°F

3" Sch 40 CS ASTM A53 supernatant piping

design pressure 275 psig } SN
design Temp 200°F

design pressure 100 psig } steam (100 psi)
design temp 350°F



9413147.0097

DESIGN ANALYSIS

PAGE 1 of 2
JOB NO. C17002
DATE 3-28-77
BY G Wyatt
CHECKED BY

FOR ARHCO
LOCATION 120 Tank Farm
SUBJECT Max Allowable Stress

The objective of these calculations is to determine the maximum allowable stress in the piping systems of the AW120 Tank Farm. All References are from the power Piping Code B31.1 1973 unless otherwise noted. Pipe is seamless carbon steel ASTM A53 GR B.

1.) Allowable Stress Range for Expansion Stresses (SE) shall not exceed Sa as given below: (B31.1 page 11)

$$S_a = f(1.25 S_c + .25 S_L)$$

where:

$S_c$: Allowable Stress cold

$S_h$: Allowable Stress hot

f: fatigue reduction factor

for A 53 grade B Carbon Steel:

$S_c = S_L = 15000$ PSI (table A-1 page 72 -22 to 650°F)

$f = 1$ for $N \leq 7000$ (table 102.3.2,C page 12)

$$\therefore S_a = (1)\left[\overset{18750}{(1.25)(15000)} + \overset{3750}{(.25)(15000)}\right] = \underline{22500 = S_a}$$

2.) For Sustained Plus Expansion Stresses (1973 Summer addenda paragraph 104.8.3

$$\cancel{\sigma_p}^{0} + \cancel{\sigma_m}^{0} + \sigma_{Th} \leq S_h + S_A$$

$$\therefore \sigma_{Th} = 15000 + 22500 = \underline{\underline{37500 \text{ PSI}}}$$



∴ The max allowable thermal stress for continuously

9413147.0098

DESIGN ANALYSIS

FOR ARHCO
LOCATION 120 Tank Farm
SUBJECT Max Allowable Stress Calcs

JOB NO. C1200-
DATE 4-26-77
BY G Wyatt
CHECKED BY

supported, unpressurized encasement lines is $\sigma_{TL}$

$$\sigma_{TL} = 37500 \text{ PSI}$$

The maximum allowable thermal stress in the 1½" Flus lines are calculated below:

$$\sigma_{pressure} + \cancel{\sigma_{weight}}^{0} + \sigma_{Thermal} \leq (S_h + S_a)$$

$$\therefore \sigma_{Thermal} \leq (S_h + S_a) - \sigma_{pressure}$$

$$\sigma_{Thermal} \leq (S_h + S_a) - \frac{PD_o}{4t}$$ (from eq 14 ANSI B31.1b 1973 page 1)

where

$P$ = design pressure = 100 PSIG

$D_o$ = outside pipe diameter = 1.9 inches

$t$ = wall thickness = .145 inches

$$\therefore \sigma_{Thermal} = 15000 + 22500 - \frac{(100)(1.9)}{4(.145)}$$

$$\sigma_{Thermal} = 15000 + 22500 - 327.6 = 37172.4 \text{ PSI}$$



9413147.0099

FOR ARHCO
LOCATION 120 AW Tank Farm
SUBJECT Max Allowable Stress Calcs

PAGE 1 of 2
JOB NO. 612907
DATE 6-27-77
BY G Wyatt
CHECKED BY

The maximum allowable thermal stress for the 2" slurry line is calculated as follows:

$$\sigma_p = \frac{PD_o}{4t_n}$$ (from ANSI B31.1b-1973 page 1)

where $\sigma_p$ = longitudinal pressure stress (PSI)

$P$ = design pressure (400 PSI)

$D_o$ = outside diameter (2.375 in)

$t_n$ = Pipe wall thickness (.154 in)

$$\therefore \sigma_p = \frac{(400)(2.375)}{4(.154)} = \underline{\underline{1542 \text{ PSI}}} \longleftarrow \sigma_p$$

$$\sigma_m = \frac{.75\, i\, M_A}{Z}$$ (from ANSI B31.1b-1973 page 1)

where $\sigma_m$ = stress due to weight

$i$ = intensification factor - (from B31.1b 1973 page 4) $i = 1.8$ for $t < 3/16$

$M_A$ = Max Bending Moment

$Z$ = section modulus (.561 in$^3$)



9413147.0100

DESIGN ANALYSIS

FOR ARHCO
LOCATION 120 Tank Farm
SUBJECT Max Allowable Stress Calcs

PAGE 2 of 2
JOB NO. 617002
DATE 4-27-77
BY G Wyatt
CHECKED BY

$M_A$ is calculated as follows:

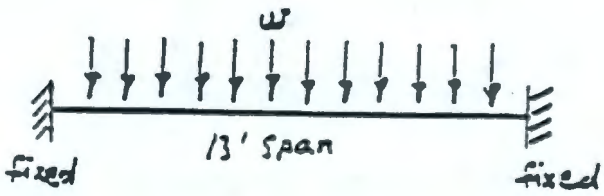


If the loading diagram is assumed to be as indicated above then:

$$M_A = \frac{w\ell^2}{12}$$ (Ref: Manual of steel construction 7th Ed page 2-203)

where $\ell = (13)(12) = 156$ inches

$w = (\text{wt of pipe}/\text{in}) + (\text{wt of contents}/\text{in})$

$$w = \frac{3.653 + 1.7(1.453)}{12} = .51 \text{ lb/in}$$

$$M_A = \frac{(.51)(156)^2}{12} = 1034.8 \text{ lb-in} \quad \text{say } 1035 \text{ lb-in}$$

$$\therefore \sigma_m = \frac{(.75)(1.8)(1035)}{.561} = \underline{\underline{2490.\ \text{PSI}}} \longleftarrow \sigma_m$$

$$\therefore \sigma_{th} \le S_h + S_a - \sigma_p - \sigma_m = 15000 - 22500 - 1542 - 2490$$

$$\Rightarrow \quad \sigma_{tl} = \underline{\underline{33468\ \text{PSI}}} \longleftarrow 2'' \text{ encased lines}$$



9413147.0101

DESIGN ANALYSIS

PAGE 3 of 5
JOB NO. 612002
DATE 4-27-77
BY G. Wyatt
CHECKED BY

FOR ARHCO
LOCATION 120 Tank Farm
SUBJECT Max Allowable Stress Calcs

The maximum allowable thermal stress for the 3" supernatant lines is calculated as follows:

$$\sigma_p = \frac{PD_o}{4t_n}$$ (from ANSI B31.16-1973 page 1)

where $\sigma_p$ = longitudinal pressure stress (PSI)
$P$ = design pressure (275 PSI)
$D_o$ = outside diameter (3.5 inches)
$t_n$ = Pipe wall thickness (.216 inch)

$$\therefore \sigma_p = \frac{(275)(3.5)}{4(.216)} = \underline{\underline{1114 \text{ PSI}}} \longleftarrow \sigma_p$$

$$\sigma_m = \frac{.75\, i\, M_A}{Z}$$ (from ANSI B31.16-1973 page 1)

where $\sigma_m$ = stress due to weight
$i$ = intensification factor - (from B31.16 1973 page 4) $i = 1$ for butt welds with t > 3/16
$M_A$ = Max Bending Moment
$Z$ = section modulus (1.724 in³)



9413147.0102

DESIGN ANALYSIS

PAGE 8 of 8
JOB NO. C17002
DATE 8-27-77
BY G Wyatt
CHECKED BY

FOR ARHCO
LOCATION 120 Tank Farm
SUBJECT Max Allowable Stress Calcs

$M_A$ is calculated as follows:

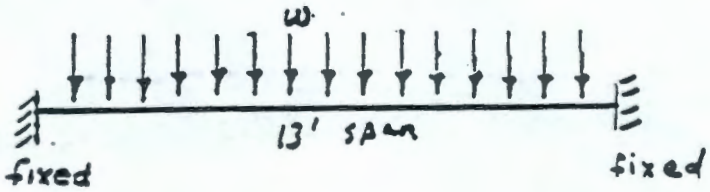


If the loading diagram is assumed to be as indicated above then:

$$M_A = \frac{w\,l^2}{12}$$ (Ref: Manual of Steel Construction ; Page 2-203)

where $l = (13)(12) = 156$ inches

$w$ = (wt of pipe/FT) + (Wt of contents/FT)

$$\therefore w = 7.38 + 3.2(1.7) = \frac{12.82}{12} = \underline{1.068\ \text{lb/in}}$$
SG

$$M_A = \frac{1.068\,(156)^2}{12} = 2165.9 \text{ in-lbs} \quad \text{say } 2166 \text{ in-lbs}$$

$$\sigma_m = \frac{.75(1)(2166)}{1.724} = \underline{942\ \text{PSI}}$$

$$\sigma_{Th} \le S_h + S_A - \sigma_p - \sigma_m = 15000 + 22500 - 7114 - 942 = 3544$$

$$\sigma_{Th} = \underline{\underline{3544}} \longleftarrow \text{3" encased lines}$$



9413147.0103

DESIGN ANALYSIS

PAGE 1 of 1
JOB NO. C12092
DATE 1-29-77
BY G. Wyatt
CHECKED BY

FOR ARHCO
LOCATION 130 Tank Farm
SUBJECT Expansion Coefficient

The objective of these calculations is to determine the expansion coefficient for A53 carbon steel at 340 °F.

$$\varepsilon = A\,\Delta T \times 10^3$$

where:

$\varepsilon$ = Thermal Expansion [mills/inch]

A = Mean Coefficient of Thermal Expansion (from B31.1-1973 Appendix B page 125).

$\Delta T$ = Temperature difference from 70°F

| | | |
|---|---|---|
| 70 | 6.07 | |
| 340 | x | |
| 400 | 6.82 | |

$$\frac{270}{330} = \frac{x}{.75} \Rightarrow x = .614$$

$$\therefore A = 6.07 + .614 = \frac{6.68}{10^6} \text{ in/in °F}$$

$$\therefore \varepsilon = (6.68)(340 - 70)(10^3) = 1.805 \text{ Mills/inch}$$

Say 1,810 Mills/inch



9413147.0104

DESIGN ANALYSIS

PAGE 1 of 3
JOB NO. 612002
DATE 3-16-77
BY G Wyatt
CHECKED BY

FOR ARHCO
LOCATION AW 120 Tank Farm
SUBJECT Calculation of weight Density

I) weight density of 3" Sch 40 pipe full of 1.75G fluid

weight of Pipe/ft = 7.58 lbs
weight of fluid/ft = (3.2)(1.7) = 5.44 lbs
cross-sectional area of pipe = 2.228 in²

∴ $W_T$ = 7.58 + 5.44 = 13.02 lb/ft
∴ $A_m$ = 2.228 in²

$\rho = W_T/12A_m = 13.02/12(2.228) = .487$ lb/in³

II) Weight density of 2" sch 40 pipe full of 1.25G fluid

weight of Pipe/ft = 3.653 lb/ft
weight of fluid/ft = (1.453)(1.7) = 2.47 lb/ft
cross-sectional area of Pipe = 1.074 in²

∴ $W_T$ = 3.653 + 2.47 = 6.123 lb/ft
$A_m$ = 1.074 in²

$\rho = W_T/12(A_m) = \frac{6.123}{(12)(1.074)} = .475$ lb/in³



III) Weight Density of 1½" Sch40 pipe full of 1.7 SG fluid
weight of pipe/ft = 2.10 lb/ft

9413147.0105

DESIGN ANALYSIS

FOR ARHCO
LOCATION AW 120 Tank Farm
SUBJECT Calculation of weight Density

PAGE 2 of 3
JOB NO. C12002
DATE 3-16-77
BY G Wyatt
CHECKED BY

weight of fluid /ft = (.882)(1.7) = 1.5 lb/ft

cross-sectional area of pipe = .799 in²

∴ Wt = 2.718 + 1.5 = 4.218 lb/ft

$A_m$ = .799 in²

ρ = $W_T/12(A_m)$ = 4.218/12(.799) = .440 lb/in³

IV) Weight Density of 3" ball valve (3 way) full of 1.75 fluid. Assume the valves are sections of pipe 5 in long x 5 in OD x 3 in ID. Total weight of valve = 9

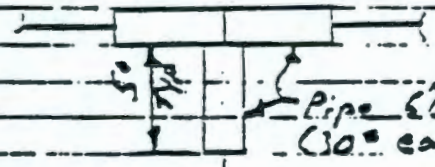


weight of fluid/ft = (3.04)(1.7) = 5.17 lb/ft

weight of value /ft = [90/15][12] = 72 lb/ft

Cross-sectional area of value = π/4 (5² − 3²) = 21.2 in²

∴ ρ = $W_T/12A_m$ = 77.57/(12)(21.6) = .298 lb/in³

V) Weight Density of 2" 3way ball valve full of 1.75G fluid. Assume the valves are sections of pipe 3.5 in Long x 3" OD x 2.44 ID



9413147.0106

DESIGN ANALYSIS

PAGE 3 of 3
JOB NO. C12002
DATE 3-16-77
BY G Wyatt
CHECKED BY

FOR ARHCO
LOCATION AZ120 Tank Farm
SUBJECT Calculations of weight Density

weight of fluid / ft = (2.026)(1.7) = 3.44 lb/ft

weight of valve / ft = (35/105)(12) = 40 lb/ft

cross-sectional area of valve = $\pi/4\,(3^2 - 2.44^2)$ = 2.39 in²

$\rho = WT/12A_m$ = 43.44/12(2.39) = 1.5 lb/in³



9413147.0107

DESIGN ANALYSIS

PAGE 1 of 2
JOB NO. C12002
DATE 2-12-77
BY G Wyatt
CHECKED BY

FOR ARHCO
LOCATION 241 AW Tank Farm
SUBJECT Value Equivalents

The objective of these calculations is to determine an equivalent pipe "size" to be used as a computer model (MEL-21 Program) of a 2" and 3" 3 way ball valve

1) 3"-3 way Ball Valve:

(1) weight 90 lbs Per Dwg No. ES-B120-M7

(2) Length 10 inches Per Dwg No. ES-B120-M7 Pick #4

(3) weight of Steel = 490 lb/ft³ Manual of Steel Const 7th.

Pipe OD = 6"

Pipe wt. = 90/3 = 3

$$\rho \frac{l\pi}{4}(d_o^2 - d_I^2) = wt$$

$$\therefore \frac{\overset{1.113}{(490)}(5)(\pi)}{(12)^3(4)}\overset{36}{(6^2 - d_I^2)} = 30 = d_I = \sqrt{\frac{40.05 - 30}{1.113}} = 3$$

∴ a 3" 3 way ball valve can be modeled as 3 section of steel pipe with OD = 6" ID = 3" and l = 5"

2) For a 2"-3 way Ball Valve:



9413147.0108

DESIGN ANALYSIS

PAGE 1 of 2
JOB NO. C12002
DATE 2-17-77
BY G Wyatt
CHECKED BY

FOR ARHCO
LOCATION 241 AW Tank Farm
SUBJECT Valve Equivalents

(1) weight 35 lbs Per Dwg. No ES-B120-M7

(2) length 7 inches Per Dwg. No ES-B120-M7

$$\frac{\rho l \pi}{4}(d_o^2 - d_I^2 = w\tau)$$

$$\therefore \frac{(490)(3.5)(\pi)}{(12)^3(4)}(3^2 - d_I^2) = 35/3$$

$$\Rightarrow d_I = \sqrt{\frac{71.65 - 7.01}{.229}} = 2.44 \text{ inches}$$

$\therefore$ a 2" 3 way ball valve can be modeled as 3 sections of steel pipe with OD = 3", ID = 2.44", and $l$ = 3.5"

Valve Model



9413147.0109

## INTRODUCTION

THE FOLLOWING ARE HAND CALCULATIONS TO DETERMINE THE THERMAL FLEXIBILITY OF THE STEAM FLUSH LINES INDICATED BELOW, FOR ISOMETRICS SEE DWG Nº ES-B170-M13.

I 1½" C.S. FLUSH LINE FROM FLUSH PIT 241-AW TO VALVE PIT 241-AW-A.

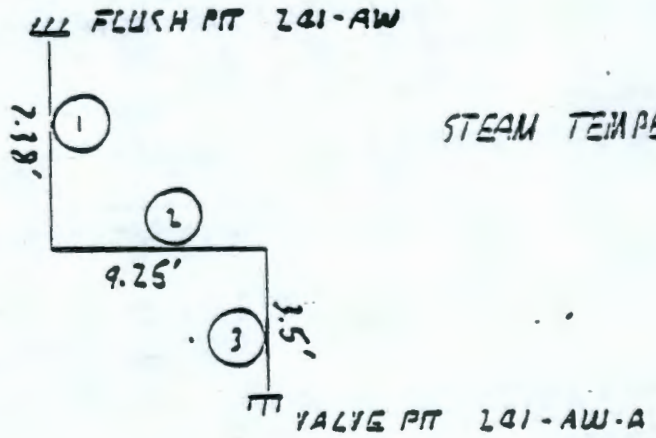


STEAM TEMPERATURE = 340°F

FOR CARBON STEEL @ 340°F [REF ANSI B31.1 1977 ED]

$\alpha = 6.682 \times 10^{-6}$ IN/IN °F

(1) $\Delta = [6.688 \text{ IN/IN °F}][12 \text{ IN/FT}][7.38 \text{ FT}][340-70 \text{ °F}] \times$

$\therefore \Delta = \underline{.16 \text{ IN}}$ ←

(2) $\Delta = [6.682 \times 10^{-6}][12][9.25][270] = \underline{.2 \text{ IN}}$ ←

(3) $\Delta = [6.688 \times 10^{-6}][12][3.5][270] = \underline{.075 \text{ IN}}$ ←

SINCE THE THERMAL EXPANSIONS OF SEGMENT 1, 2, & 3 ARE L THAN ½ IN. A BUBBLE WRAP COVERING OF ½ IN. WILL BE ADEQUATE FOR THIS LINE.



9413147.0110

THE LINE WILL BE CHECKED FOR FLEXIBILITY AS FOLLOWS

$$\frac{DY}{[L-U]^2} \leq .03 \quad \text{[REF ANSI B31.1 PARA 119.7.1.A2]}$$

WHERE

D = PIPE OD = 1½"
Y = RESULTANT OF MOVEMENTS [IN]
L = DEVELOPED LENGTH OF LINE [FT]
U = ANCHOR DISTANCE [FT]

$L = 7.38 + 9.25 - 3.5 = 20.13$ FT

$U = \sqrt{[7.38 + 3.5]^2 + [9.25]^2} = 14.28$ FT

$Y = U\alpha = [14.28]\underbrace{[6.628 \times 10^{-6}][12][210]}_{.0216} = .309$ IN

$$\frac{[1.5][.309]}{[20.13 - 14.28]^2} = .014$$

SINCE .014 < .03 THIS LINE IS ADEQUATELY FLEXIBLE PER B31.1 PARAGRAPH 119.7.1 A2

II 1½" CS FLUSH LINE FROM FLUSH PIT 241-AW TO VALVE PIT 241-AW-B

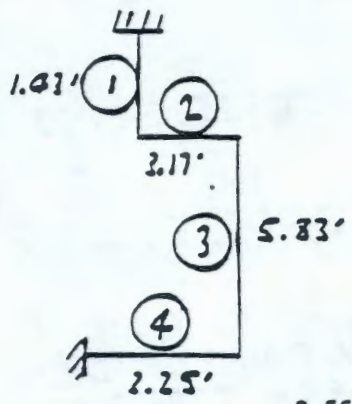


(1) $\Delta = [.022 \text{ IN/FT}][1.43] = .03$ IN

(2) $\Delta = [.022][3.17] = .068$ IN

(3) $\Delta = [.022][5.83] = .125$ IN

(4) $\Delta = [.022][3.25] = .07$ IN



SINCE THE THERMAL EXPANSIONS OF SEGMENTS 1 THRU 4 ARE

DESIGN ANALYSIS

FOR RHO
LOCATION
SUBJECT B110 TE FARM

PAGE 3 OF 5
JOB NO. B12003
DATE 4-17-78
BY G WYATT
CHECKED BY [illegible]

ADEQUATE FOR THIS LINE.

$D = 1\frac{1}{2}$ IN

$L = 1.43 + 3.17 + 5.83 + 3.25 = 13.68$ FT

$U = \sqrt{[3.25 - 3.17]^2 - [5.83 + 1.43]^2} = 7.26$ FT

$Y = U\alpha = [7.26][.0216] = .157$ IN

$$\frac{[1.5][.157]}{[13.68 - 7.26]^2} = .006'$$

SINCE .006 < .03 THIS LINE IS ADEQUATELY FLEXIBLE PER B31.1 PARAGRAPH 19.7.1 A2

III 1½" CS FLUSH LINE FROM FLUSH PIT 241-AW TO FEED PUMP PIT 241-AW-01E

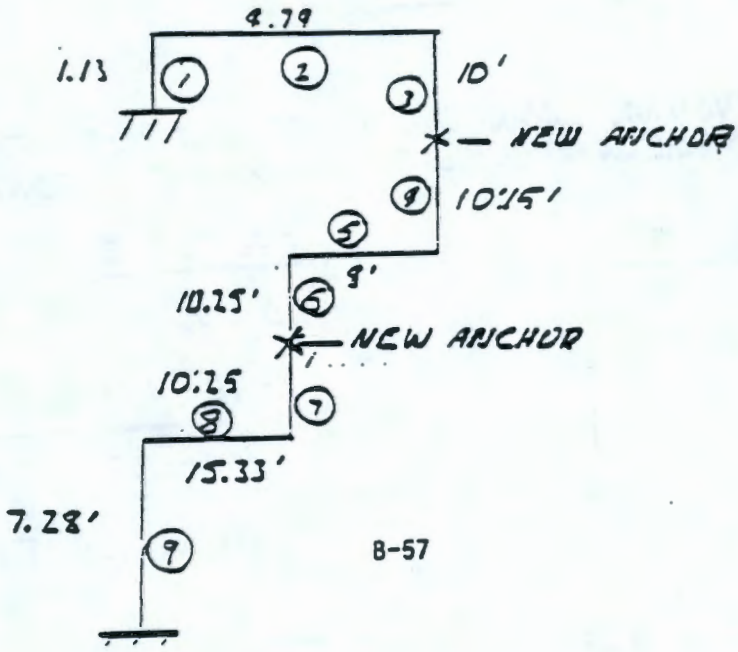




9413147.0112

DESIGN ANALYSIS

FOR RHO
LOCATION
SUBJECT B17D TK FARM

PAGE 4 OF 5
JOB NO. B17003
DATE 4-17-78
BY G WYATT
CHECKED BY AC

(1) $\Delta = [.0227][1.13] = .024$ IN

(2) $\Delta = [.0227][4.79] = .12$ IN

(3) $\Delta = [.0227][10] = .22$ IN

(4) $\Delta = [.0227][10.15] = .22$ IN

(5) $\Delta = [.0227][8] = .176$ IN

(6) $\Delta = [.0227][10.25] = .23$ IN

(7) $\Delta = [.0227][10.25] = .23$ IN

(8) $\Delta = [.0227][15.33] = .34$ IN

(9) $\Delta = [.0227][7.28] = .16$ IN

SINCE ALL THERMAL EXPANSIONS ABOVE ARE LESS THAN .5 IN, 1/2 IN. OF BUBBLE WRAP WILL BE ADEQUATE FOR THIS LINE

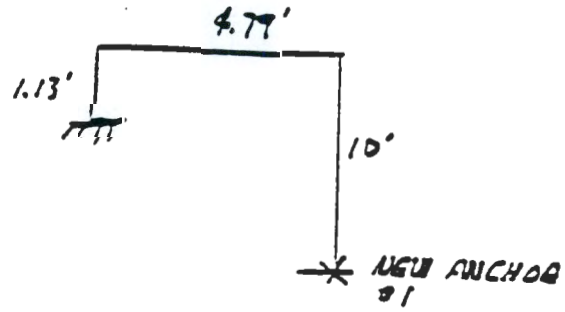


SECTION I

$\Delta = 1/2$ IN

$L = 10 + 4.79 + 1.13 = 15.92$ FT

$U = \sqrt{[10-1.13]^2 + [4.79]^2} = 10.$

$Y = (U)(\Delta) = [10.08][.0216] = .217$

$\therefore \frac{\Delta Y}{L-U]^2} = \frac{[1.5][.217]}{[15.92-10.08]^2} = .0095$



9413147.0113

DESIGN ANALYSIS

FOR RHO
LOCATION
SUBJECT B110 TK FARM

PAGE 5 OF 5
JOB NO. B17003
DATE 4-17-79
BY G WYATT
CHECKED BY [illegible]

## SECTION II

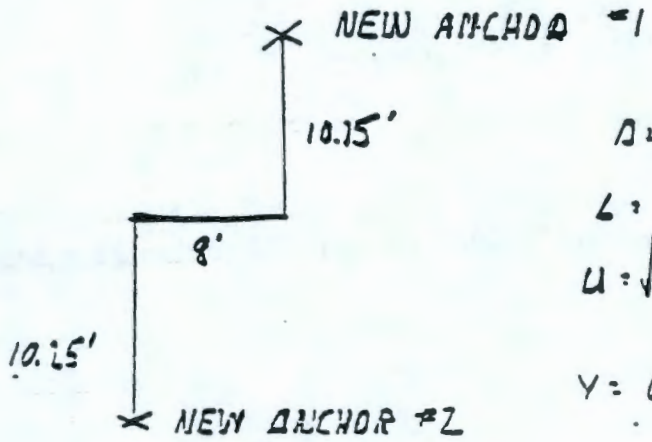


D = 1.5 IN

L = 10.15 + 8 + 10.25 = 28.4 F

U = $\sqrt{[10.15 + 10.25]^2 + 8^2}$ = 21.9

Y = [21.9][.0216] = .47

$$\frac{DY}{[L-U]^2} = \frac{[1.5][.47]}{[28.4-21.9]^2} = \underline{\underline{.016}} \longleftarrow$$

## SECTION III

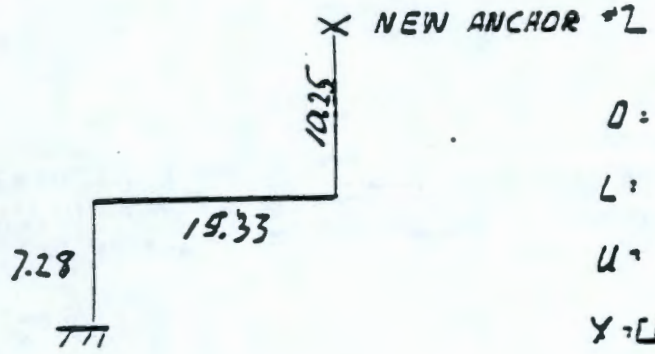


D = 1.5 IN

L = 10.25 + 15.33 + 7.28 = 32.86

U = $\sqrt{(17.53)^2 + (15.33)^2}$ = 23.28

Y = [U][.6] = [23.28][.0216] = .5

$$\frac{DY}{[L-U]^2} = \frac{[1.5][.5]}{[32.86-23.28]^2} = \underline{\underline{.008}} \longleftarrow$$



SINCE .0095 , .016 AND .008 ARE ALL LESS THAN .03 THIS FLUSH LINE IS ADEQUATELY FLEXIBLE PER ANSI B31.1 PARAGRAPH 119.7.1 A2.

9413147.0114

# DESIGN ANALYSIS

FOR RHO
LOCATION 241-A & AW TANK FARM
SUBJECT 3" DR-374-M24 TO NEW BLDG

PAGE 1/3
JOB NO. C12003-300
DATE 5/15/73
BY A W BORKED
CHECKED BY G WINN

PROBLEM: PERFORM STRESS ANALYSIS OF 3" DR-374-M24 LINE TO 272-AW BUILDING.

SOLUTION: USE MEL-21 COMPUTOR CODE

REFERENCES:

ANSI B31.1 - 1977 EDITION - 1977 SUMMER ADD., "POWER PIPING"

CONTENTS: PAGE

ANALYSIS
DETERMINE MEL INPUT 2
SCHEMATIC 3

SUMMARY OF RESULTS:

THE MAXIMUM DEFLECTION IS 2.12", BUBBLE WRAP REQUIRED 19 FT. EACH SIDE. THE MAXIMUM STRESS IS 17,169 PSI (PER COMPUTOR RUN AWB10SA), WELL BELOW THE ALLOWABLE OF 22500 PSI.



9413147.0115

— DETERMINE INPUT FOR MEL —

THERMAL EXPANSION:

$$\Delta l = A \Delta T$$

LET $\Delta T = 340 - 70 = 270°F$ (340° ASSUMES 100 PSIG SAT. STM IN LINE)

$$A = 6.689 \times 10^{-6} \text{ IN/IN-°F} \quad (B31.1, \text{APP. B})$$

$$\Delta l = (270)(6.688 \times 10^{-6}) = \underline{1.81 \times 10^{-3} \text{ IN/IN}}$$

POISSON'S RATIO PER B31.1, 119.63,

$$\mu = \underline{0.3}$$

MODULUS OF ELASTICITY PER B31.1, APP. C,

$$E_{C,U} = \underline{27.9 \times 10^6 \text{ PSI}}$$

ALLOWABLE STRESS PER B31.1, PARA 102.3.2C,

$$S_A = f(1.25 S_c + .25 S_h)$$

WHERE $f = 1$
$S_c = S_h = 15000$ PSI (B31.1 APP A)

$$S_A = \underline{22{,}500 \text{ PSI}}$$



9413147.0116

VITRO ENGINEERING CORPORATION HC-SD-WM-ER-126
REVISION 0

# DESIGN ANALYSIS

PAGE 3/3
JOB NO. C12003-300
DATE 5/15/78
BY A W BJORKEGA
CHECKED BY G L [illegible]
5-17-78

FOR RHO
LOCATION 241-A & AW TANK FARMS
SUBJECT 3" OR-374-M24 TO NEW BLDG

SCHEMATIC
PER DWG H-2-70422

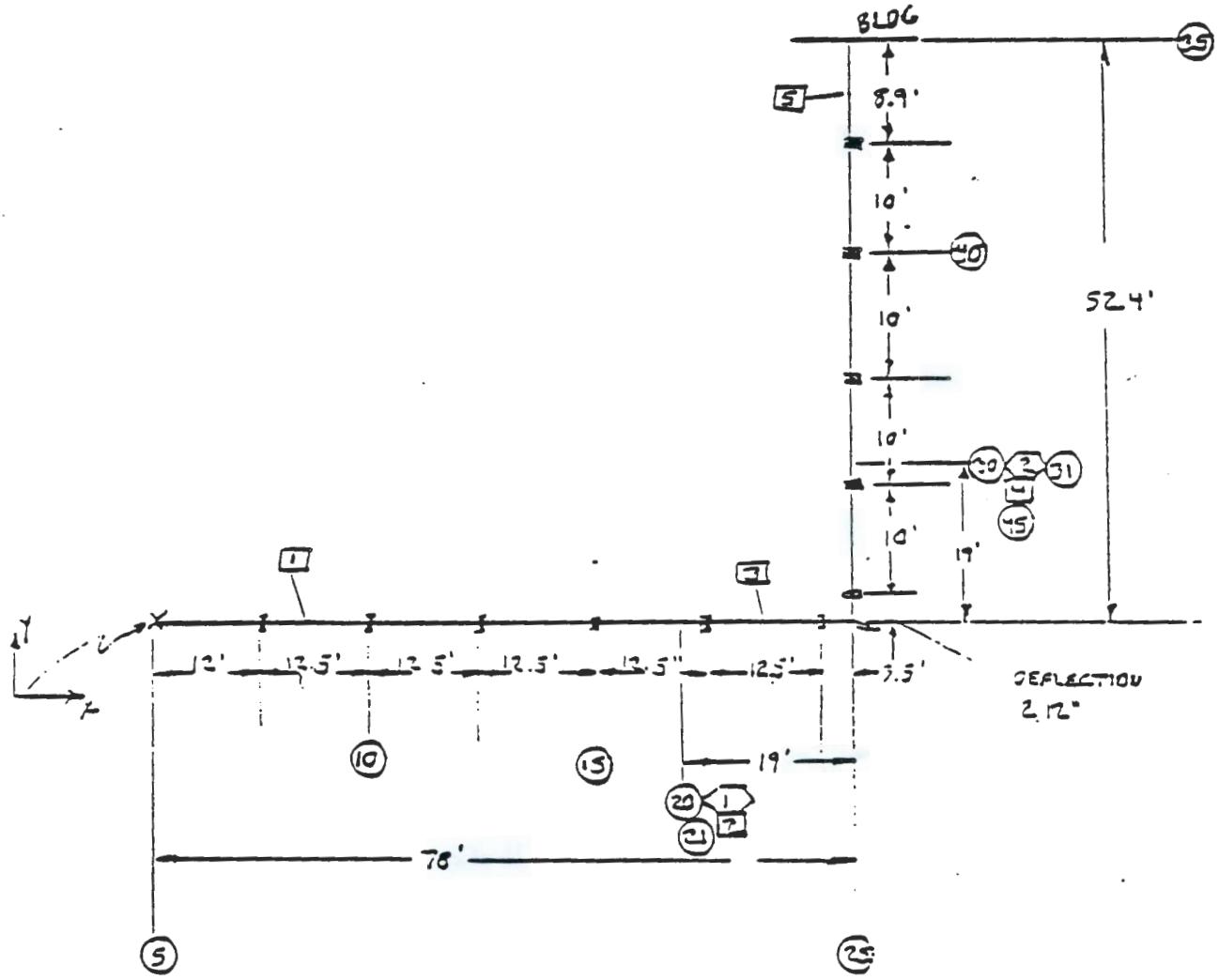


MAXIMUM STRESS PER RUN AWB10SA IS 17,169 PSI

DESIGN ANALYSIS

FOR
LOCATION
SUBJECT

PAGE
JOB NO.
DATE
BY
CHECKED BY

9413147.0118

APPENDIX D

DESIGN ANALYSIS

FOR ARHCO
LOCATION 100 AW TK Farm
SUBJECT CDB Stress Analysis

JOB NO. C11002
DATE 6-18-77
BY G. Wyatt
CHECKED BY [illegible]

The Objective of these calculations is to show that the clean out box as shown on Dwg H-2-70418 is adequate designed for a hydrostatic test pressure of 90 psi

{ hydro test pressure = 90 PSI
{ Ref Dwg H-2-70418

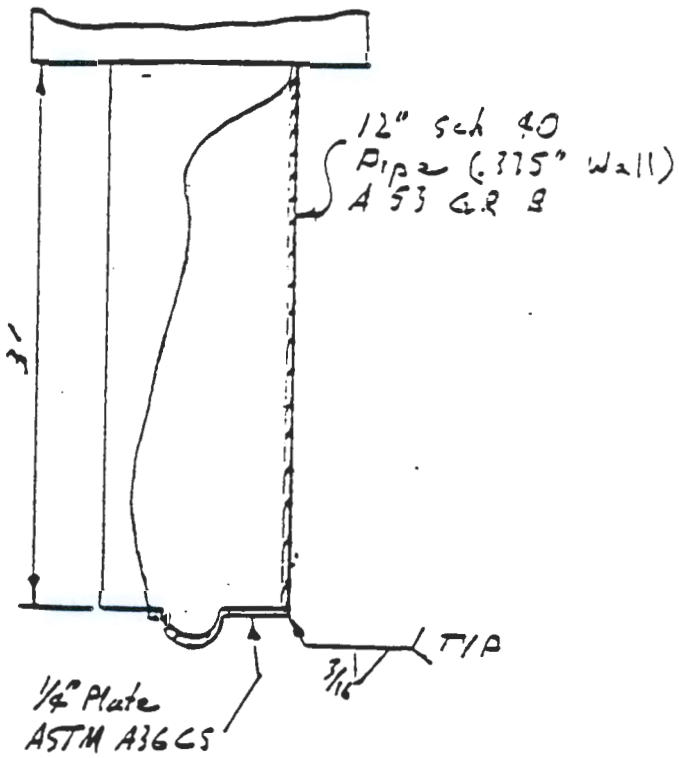


For cylindrical shells under internal pressure the required shell thickness is given by the following: (Sec VIII Div I UG-27)

$$t = \frac{PR}{SE - .6P}$$ circumferential stress

where P = Design pressure = 90 PSI (Sec VIII Div I)
R = inside radius = 6 inches



9413147.0119

DESIGN ANALYSIS

FOR ARHCO
LOCATION 170 AW TK Farm
SUBJECT COB Stress Analysis

PAGE 2 of 3
JOB NO. C12002
DATE 6-19-77
BY G Wyatt
CHECKED BY [illegible]

S = Max allowable stress = 12700 (-20 to 550°F Table UCS-

E = Joint Efficiency = 1 (See UCS-27 page 119)

$$\therefore \quad t = \frac{(90)(6)}{(12700(1)) - (.6)(600)} = .0437''$$

360

$$.0437'' < .375''$$

There fore a Cleanout Box constructed of 12" Sch 40 CS Pi is OK.

The ends of the Cleanout Box are assumed to be flat unstayed Heads and are analyzed per UG-34.

The minimum required thickness of flat unstayed circul. heads shall be calculated by the following: (UG-34 (2))

$$t = d\sqrt{CP/S}$$

where d = 12 inches
C = .5
P = 90 PSI
S = 12600 PSI (Table UCS

$$\therefore \quad t = 12\sqrt{\frac{(.5)(90)}{12600}} = 12(.0594) = .71''$$

$$.75'' > .71''$$

∴ 3/4" thick heads are adequate per Sect VIII Division I



9413147.0120

DESIGN ANALYSIS

FOR ARHCO
LOCATION 120 AW TK Farm
SUBJECT COB Stress Analysis

PAGE 3 of 3
JOB NO. B-100
DATE 9-2-77
BY G Wyatt
CHECKED BY [illegible]

The 2 in encasement line is now checked for thermal stress per B31.1 paragraph 119.7 section A.3 as follows:

$$\frac{DY}{(L-U)^2} \leq .03$$

where

D = nominal pipe size

Y = Resultant of movem to be absorbed

L = Developed length o

U = Anchor distance

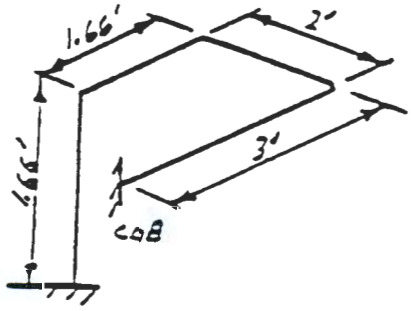


Process Line

— D = 2"

— L = 8.33 ft

$U = \sqrt{(1.34)^2 + (2)^2 + (1.66)^2} \Rightarrow$

— U = 2.92 ft

Y = (Δ)(L) =

Δ @ 340°F = 2.172 in/100 ft

— ∴ Y = $\frac{(2.172)(2.92)}{100}$ = .063 in

$$\therefore \frac{DY}{(L-U)^2} = \frac{(2)(.063)}{(8.33-2.92)^2} = .0043 < .03$$

∴ The 2" encasement is ok per this criteria



9413147.0121

9413147.0122

# APPENDIX C

## M-24 PIPE CODE FOR B 120 PROJECT

This page intentionally left blank.

9413147.0123

PIPE CODE M-24

| Service: | Max. Operating Pressure: | Max. Operating Temp.: |
|---|---|---|
| Drains | .20 psig | 200 F |

| | | |
|---|---|---|
| Sizes | 1" thru 6" | 8", 10" and 12" |
| Pipe Grade | Carbon steel, ASTM A53, Type S, Grade B, or ASTM A106, Grade B | |
| Wall Thickness | Schedule 40 | Schedule 20 (0.250" wall) |
| Fittings | Wrought carbon steel, ASTM A234, Gr. WPB, butt-welding per ANSI B16.9. Schedule to match pipe. | |
| Flanges | 150# forged steel, ASTM A181, Gr. 2, or ASTM A105 weld neck per ANSI B16.5. Bore to match pipe I.D. | |
| Bolting | Carbon steel, heavy hex head series bolts and nuts per ASTM A307, Grade B. | |
| Gaskets | Compressed asbestos sheet 1/16" thick. Garlock No. 900. Use full face gasket with flat face flanges. | |

9413147.0124

# DISTRIBUTION SHEET

WHC-SD-WM-RPT-061
REV. 0

To: Fluid Systems Engineering

From: System Structural Integrity Assessments

Date: 03/19/93

Project Title/Work Order:

Visual Examination of Tank Annuli of the 241-AN Tank Farm

EDT No.: 140954 ECN No.:

| Name | MSIN | With Attachment | EDT/ECN & Comment | EDT/ECN Only |
|---|---|---|---|---|
| E. Biebesheimer | R1-51 | X | | |
| L. D. Blackburn | H5-67 | X | | |
| W. C. Carlos | H5-52 | X | | |
| D. J. Green | H5-53 | X | | |
| J. P. Hauptmann | S2-03 | X | | |
| R. Malhan | S1-57 | X | | |
| V. D. Maupin | R1-51 | X | | |
| M. A. Mclaughlin | H5-34 | X | | |
| T. L. Moore | H5-09 | X | | |
| K. L. Morris | H5-09 | X | | |
| D. C. Pfluger | H5-52 | X | | |
| R. S. Popielarcyk | R1-30 | X | | |
| L. Ruffin | R2-95 | X | | |
| E. B. Schwenk | H5-52 | X | | |
| K. V. Scott | H5-52 | X | | |
| D. B. Smet | X5-52 | X | | |
| J. D. Thomson | R1-30 | X | | |
| F. R. Vollert | H5-09 | X | | |
| E. J. Walter (5) | H5-52 | X | | |
| Central Files (Orig. + 3 copies) | L8-04 | X | | |
| ~~Station 21~~ | ~~H5-51~~ | | | ~~X~~ |
| ~~IRA Clearance~~ | ~~H4-17~~ | ~~X~~ | | |

9413147.0125

MAY 28 1993 (20) Sta. 21

# ENGINEERING DATA TRANSMITTAL



1. EDT 140954

| | | |
|---|---|---|
| 2. To: (Receiving Organization) Fluids Systems Engineering | 3. From: (Originating Organization) System Structural Integrity Assessment | 4. Related EDT No.: N/A |
| 5. Proj./Prog./Dept./Div.: W23460/N13AB | 6. Cog. Engr.: E. J. Walter | 7. Purchase Order No.: N/A |
| 8. Originator Remarks: The photographs in the final issue will be color xeroxed. | | 9. Equip./Component No.: N/A |
| | | 10. System/Bldg./Facility: 241-AN |
| 11. Receiver Remarks: | | 12. Major Assm. Dwg. No.: N/A |
| | | 13. Permit/Permit Application No.: N/A |
| | | 14. Required Response Date: 03/31/93 |

15. DATA TRANSMITTED

| (A) Item No. | (B) Document/Drawing No. | (C) Sheet No. | (D) Rev. No. | (E) Title or Description of Data Transmitted | (F) Impact Level | (G) Reason for Transmittal | (H) Originator Disposition | (I) Receiver Disposition |
|---|---|---|---|---|---|---|---|---|
| 1 | WHC-SD-WM-RPT-061 | | 0 | Visual Examination of Tank Annuli at the 241-AN Tank Farm | 3EQ | 1 | 1 | |
| | | | | | | | | |
| | | | | | | | | |
| | | | | | | | | |
| | | | | | | | | |

16. KEY

| Impact Level (F) | Reason for Transmittal (G) | Disposition (H) & (I) |
|---|---|---|
| 1, 2, 3, or 4 (see MRP 5.43) | 1. Approval 2. Release 3. Information 4. Review 5. Post-Review 6. Dist. (Receipt Acknow. Required) | 1. Approved 2. Approved w/comment 3. Disapproved w/comment 4. Reviewed no/comment 5. Reviewed w/comment 6. Receipt acknowledged |

17. SIGNATURE/DISTRIBUTION (See Impact Level for required signatures)

| (G) Reason | (H) Disp. | (J) Name | (K) Signature | (L) Date | (M) MSIN | (J) Name | (K) Signature | (L) Date | (M) MSIN | (G) Reason | (H) Disp. |
|---|---|---|---|---|---|---|---|---|---|---|---|
| 1 | 1 | Cog.Eng. E. J. Walter | EJ Walter | 5/14/93 | H5-52 | | | | | | |
| 1 | 1 | Cog. Mgr. K. V. Scott | KVScott | 3-31-93 | H5-52 | | | | | | |
| 1 | 1 | QA R. Malhan | R. Malhan | 4/20/93 | S1-57 | | | | | | |
| 1 | 1 | F. R. Vollert | F.R. Vollert | 5/3/93 | H5-09 | | | | | | |
| 1 | 1 | D. C. Pfluger | DC Pfluger | 3/29/93 | S6-12 | | | | | | |
| 1 | 1 | L. Ruffin | L Ruffin | 4-26-93 | R1-51 | | | | | | |

| 18. | 19. | 20. | 21. DOE APPROVAL (if required) |
|---|---|---|---|
| E. J. Walter<br>EJ Walter 5/14/93<br>Signature of EDT Originator Date | M. A. McLAUGHLIN<br>M.A. McLaughlin 5/18/93<br>Authorized Representative for Receiving Organization Date | K. V. Scott<br>KVScott 5/20/93<br>Cognizant/Project Engineer's Manager Date | Ltr. No.<br>[] Approved<br>[] Approved w/comments<br>[] Disapproved w/comments |

BD-7400-172-2 (07/89) (EF) GEF097

9413147.0125

| Date Received: 5/20/93 DS | INFORMATION RELEASE REQUEST | Reference: WHC-CM-3-4 |
|---|---|---|

Complete for all Types of Release

**Purpose**

- [] Speech or Presentation
  - [] Full Paper
  - [] Summary
  - [] Abstract
  - [] Visual Aid
- [] Speakers Bureau
- [] Poster Session
- [] Videotape

(Check only one suffix)

- [] Reference
- [X] Technical Report
- [] Thesis or Dissertation
- [] Manual
- [] Brochure/Flier
- [] Software/Database
- [] Controlled Document
- [] Other

ID Number (include revision, volume, etc.): WHC-SD-WM-RPT-061, Rev. 0

List attachments: N/A

Date Release Required: 03/31/93

Title: Visual Examination of Tank Annuli at the 241-AN Tank Farm

Unclassified Category: UC-

Impact Level: 3EQ

New or novel (patentable) subject matter? [X] No [] Yes
If "Yes", has disclosure been submitted by WHC or other company?
[] No [] Yes Disclosure No(s).

Information received from others in confidence, such as proprietary data, trade secrets, and/or inventions?
[X] No [] Yes (Identify)

Copyrights? [X] No [] Yes
If "Yes", has written permission been granted?
[] No [] Yes (Attach Permission)

Trademarks?
[] No [X] Yes (Identify) Kodak (pg.7)

Complete for Speech or Presentation

Title of Conference or Meeting: N/A

Group or Society Sponsoring:

Date(s) of Conference or Meeting:

City/State:

Will proceedings be published? [] Yes [] No
Will material be handed out? [] Yes [] No

Title of Journal:

CHECKLIST FOR SIGNATORIES

| Review Required per WHC-CM-3-4 | Yes | No | Reviewer - Signature Indicates Approval: Name (printed) | Signature | Date |
|---|---|---|---|---|---|
| Classification/Unclassified Controlled Nuclear Information | [] | [X] | | | |
| Patent - General Counsel | [X] | [] | S.W. Bergman | per Bergman | 5/24/93 |
| Legal - General Counsel | [X] | [] | | | |
| Applied Technology/Export Controlled Information or International Program | [] | [X] | | | |
| WHC Program/Project | [] | [X] | | | |
| Communications | [] | [X] | | | |
| RL Program/Project | Email [ ] | [X] | A. Denot states this document does not require review per E. Williams DS. | | 5/24/93 |
| Publication Services | [X] | [ ] | This solid for D. Hastings 5/26/93 DS | | |
| Other Program/Project | [] | [X] | | | |

Information conforms to all applicable requirements. The above information is certified to be correct.

| | Yes | No |
|---|---|---|
| References Available to Intended Audience | [X] Review with Williams 5/26/93 DS | [X] |
| Transmit to DOE-HQ/Office of Scientific and Technical Information | [] | [X] |

Author/Requestor (Printed/Signature): E. J. Walter, Eugene J. Walter, Date: 3/19/93

Intended Audience: [] Internal [] Sponsor [X] External

Responsible Manager (Printed/Signature): K. V. Scott, K V Scott, Date: 3/31/93

INFORMATION RELEASE ADMINISTRATION APPROVAL STAMP

Stamp is required before release. Release is contingent upon resolution of mandatory comments.

APPROVED FOR RELEASE — OFFICIAL DOCUMENT — NS — Date 5/26/93

Date Cancelled

Date Disapproved

9413147.0127

BD-7600-062 (08/91) WEF074

Part 1

# SUPPORTING DOCUMENT

1. Total Pages 2236

| 2. Title | 3. Number | 4. Rev No. |
|---|---|---|
| Visual Examination of Tank Annuli at the 241-AN Tank Farm | WHC-SD-WM-RPT-061 | 0 |

| 5. Key Words | 6. Author |
|---|---|
| Double-Shell Tank Examination, CCTV, WAC, Video Inspection System, Annulus Examination, Tank Integrity Assessment | Name: E. J. Walter<br>EJ Walter<br>Signature<br>Organization/Charge Code W23460/N13AB |

APPROVED FOR PUBLIC RELEASE
5/26/93 N. Solin


7. Abstract

This document records the results of the examination of the annuli of the double-shell tanks at the 241-AN Tank Farm. This examination supports the "not unfit for use" assessment of the tanks in accordance with the Washington Administrative Code 173-303-640(2).


8. PURPOSE AND USE OF DOCUMENT - This document was prepared for use within the U.S. Department of Energy and its contractors. It is to be used only to perform, direct, or integrate work under U.S. Department of Energy contracts. This document is not approved for public release until reviewed.

PATENT STATUS - This document copy, since it is transmitted in advance of patent clearance, is made available in confidence solely for use in performance of work under contracts with the U.S. Department of Energy. This document is not to be published nor its contents otherwise disseminated or used for purposes other than specified above before patent approval for such release or use has been secured, upon request, from the Patent Counsel, U.S. Department of Energy Field Office, Richland, WA.


DISCLAIMER - This report was prepared as an account of work sponsored by an agency of the United States Government. Neither the United States Government nor any agency thereof, nor any of their employees, nor any of their contractors, subcontractors or their employees, makes any warranty, express or implied, or assumes any legal liability or responsibility for the accuracy, completeness, or any third party's use or the results of such use of any information, apparatus, product, or process disclosed, or represents that its use would not infringe privately owned rights. Reference herein to any specific commercial product, process, or service by trade name, trademark, manufacturer, or otherwise, does not necessarily constitute or imply its endorsement, recommendation, or favoring by the United States Government or any agency thereof or its contractors or subcontractors. The views and opinions of authors expressed herein do not necessarily state or reflect those of the United States Government or any agency thereof.


9. Impact Level 3EQ

10. RELEASE STAMP

OFFICIAL RELEASE BY WHC
DATE MAY 28 1993
Sta. 21


9413147.0128

WHC-SD-WM-RPT-061
REV. 0

# VISUAL EXAMINATION OF TANK ANNULI AT THE 241-AN TANK FARM

March 1993

9413147.0129

Prepared By: E J Walter 3-19-93
E. J. Walter, Principal Engineer — Date
System Structural Integrity Assessments

Reviewed By: DC Pfluger 3/29/93
D. C. Pfluger, Senior Engineer — Date
System Structural Integrity Assessments

Approved By: K V Scott 3/31/93
K. V. Scott, Manager — Date
System Structural Integrity Assessments

WESTINGHOUSE HANFORD COMPANY
For The
U.S. Department of Energy
Richland Field Office (RL)

CONTENTS

PAGE

1.0 INTRODUCTION . . . . . 1

2.0 OBJECTIVES . . . . . 1

3.0 SCOPE . . . . . 1

4.0 CCTV EXAMINATION EQUIPMENT AND PROCEDURES . . . . . 2

5.0 GENERAL OBSERVATIONS . . . . . 3

FIGURE 1 - TYPICAL ARRANGEMENT FOR ANNULUS EXAMINATION OF THE 241-AN DOUBLE-SHELL TANKS . . . . . 4

TABLE 1 - LIST OF 241-AN TANK ANNULUS EXAMINATION TAPES . . . . . 5

6.0 CONCLUSIONS AND RECOMMENDATIONS . . . . . 6
6.1 CONCLUSIONS . . . . . 6
6.2 RECOMMENDATIONS . . . . . 7

7.0 REFERENCES . . . . . 8

APPENDIX - Instructions for Visual Examination of the Tank Annuli of the Double-Shell Tanks

ATTACHMENT 1 - Photograph, Annulus Tank 241-AW-101

ATTACHMENT 2 - Examination Photographs

ATTACHMENT 3 - Video Examination Record - Double-Shell Tank Annulus 241-AN Tanks

9413147.0130

# VISUAL EXAMINATION OF TANK ANNULI AT THE 241-AN TANK FARM

## 1.0 INTRODUCTION

The *Tank Farm Project Tank Integrity Assessment Program Plan*, WHC-SD-WM-AP-017, Rev. 0, (WHC 1991) identifies the tasks to be performed during the assessment of the existing tank system which stores or treats dangerous waste. This assessment is in response to the requirements defined by the Washington State Department of Ecology's *Dangerous Waste Regulations*, Washington Administrative Code (WAC) 173-303-640(2). Closed-circuit television (CCTV) examinations in the annuli of the 241-AN tanks has been performed as required by the integrity assessment program plan. The results of the examinations have been reviewed and are reported in this document.

## 2.0 OBJECTIVES

The objectives of the visual examinations are to determine whether there is visual evidence of leakage of liquid waste from the primary-shell and degradation and corrosion of the primary- and secondary-shells, to provide a record of surface conditions as a baseline for subsequent examinations, to evaluate the environmental corrosiveness of the environment of the primary- and secondary-shell surfaces, and to survey the annulus for surface conditions and hardware that could restrict or obstruct access for the performance of non-destructive examinations planned.

## 3.0 SCOPE

The CCTV examinations were conducted via two 4-in. pipe dome risers about 180° apart in each of the seven 241-AN double-shell tanks (DST); see Table 1. The camera was lowered through the risers into the annuli. The visible surfaces of the primary- and secondary-steel tanks and the insulating concrete were examined, and all images were recorded on video tape. Verification check sheets were completed during the CCTV examinations to provide an examination record. An examination review report for the CCTV video tape and examination records has been completed for the annuli listed below:

241-AN-101, risers 17E and 17L
241-AN-102, risers 17E and 17L
241-AN-103, risers 17A and 17H
241-AN-104, risers 17B and 17H
241-AN-105, risers 17D and 17K
241-AN-106, risers 17C and 17H
241-AN-107, risers 17C and 17H.



9413147.0131

## 4.0 CCTV EXAMINATION EQUIPMENT AND PROCEDURES

The *Acceptance Test Report for Double-Shell Tank Inspections*, WHC-SD-WM-ATR-018, (WHC 1992) demonstrates the acceptability of the CCTV examination system. The acceptance test report provides the following description of the equipment and activities for DST inspections. The examination system consists of a remotely operated video camera suspended on aluminum rods. The tilt capability of the camera is 65° up and 90° down from the horizontal plane. The horizontal pan range is approximately 340°. The camera is equipped with lights of variable intensity. The camera is qualified to examine from a distance of 20 ft (6.09 m) at which resolution is equivalent to that attainable by direct visual examination. Direct visual examination is equivalent to resolving a 1/32 in. (0.079-cm) line on an 18 percent neutral gray card at a distance of 24 in. (60.9-cm). This standard is taken from the *Rules for In-Service Inspection of Nuclear Power Plant Components*, Section XI, ASME Boiler and Pressure Vessel Code (ASME 1989).

9413147.0132

Electronic position encoders provide real-time digital position reference of the CCTV images in the annulus. The view of the examination camera was monitored during the examination. The focus, zoom, lighting, and speed of the camera were adjusted to provide the optimum examination with the equipment available. When a condition required more detailed examination, extra effort was made to obtain clear images. Additional detail regarding the equipment used and inspection procedure is available in *CCTV Examination Operating Procedure for the Double-Shell Tanks*, WHC-SD-WM-TCP-003, Rev. 0 (WHC 1992).

The maximum gamma radiation exposure rates in roentgens per hour (R/hr) encountered by the equipment in the 241-AN tank farm annuli are listed as follows:

241-AN-101 - 1 R/hr
241-AN-102 - 50 R/hr
241-AN-103 - 30 R/hr
241-AN-104 - 40 R/hr
241-AN-105 - 30 R/hr
241-AN-106 - 30 R/hr
241-AN-107 - 40 R/hr.

The camera was lowered through the designated risers into the annulus. The examination began with the camera at approximately 25 ft (7.6 m) below the top of the riser and continued in 4-ft (1.2-m) increments to a depth where the bottom knuckle of the primary-shell can be viewed. A continuous vertical strip of the surface of the primary- and the secondary-shell was examined from the 25 ft (7.6 m) depth to and including the secondary-shell bottom of the annulus. Approximately 18 percent of the primary-shell surface and 30 percent of the secondary-shell surface were examined in each tank. Figure 1, depicts the viewing position of and the area covered by the camera in the annulus.

The primary-shell surface coverage is limited by the curvature. The secondary-shell coverage is limited by the range of the camera, which is 20 ft (6.09m).

## 5.0 GENERAL OBSERVATIONS

As previously noted, the video examination was monitored at the site. Areas requiring more detailed examination were revisited until the examination was considered adequate. In these observations all forms of corrosion or oxidation of the inner or outer shell surfaces will be described as rust.

Photograph #093974-28CN, Attachment 1, provides a reference view of the surface of the 241-AN-101 primary-shell taken in 1980 before the tank was placed in service. The surface condition has not changed much.

The 241-AN video tapes listed in Table 1 were viewed by an accredited second-party examination, through the System Structural Integrity Assessment group, to provide recorded, independent review observations (Attachment 3). Rust does exist one many areas. The accumulation of rust was always greater at the welds and the adjacent heat-affected area. The degree of rust varies from tank to tank, but is more marked between the primary- and secondary-shells. Without exception, the progress of rust on the secondary-shell exceeds the progress of rust on the primary-shell.

In several areas on both primary- and secondary-shell surfaces, condensation appears to have existed. Stains from a small water puddle were observed on the floor of the annulus in the area of the leak-detector sensor. Whether the source of this puddle was condensation or leakage from outside the secondary tank has not been determined.

The CCTV video tape shows airborne particles in motion. The loose mill scale on the annulus floor indicates a greater loss of mill scale from the secondary-shell than the primary-shell.

Attachment 3 describes areas of corrosion, markings, and blemishes that were observed and cannot be accounted for. None are thought to reflect significant degradation of the tank integrity. There was no discernable degradation of the concrete insulation between bottoms of the primary- and secondary-shells.

9413147.0133

FIGURE 1 - TYPICAL ARRANGEMENT FOR ANNULUS EXAMINATION OF THE 241-AN DOUBLE-SHELL TANKS

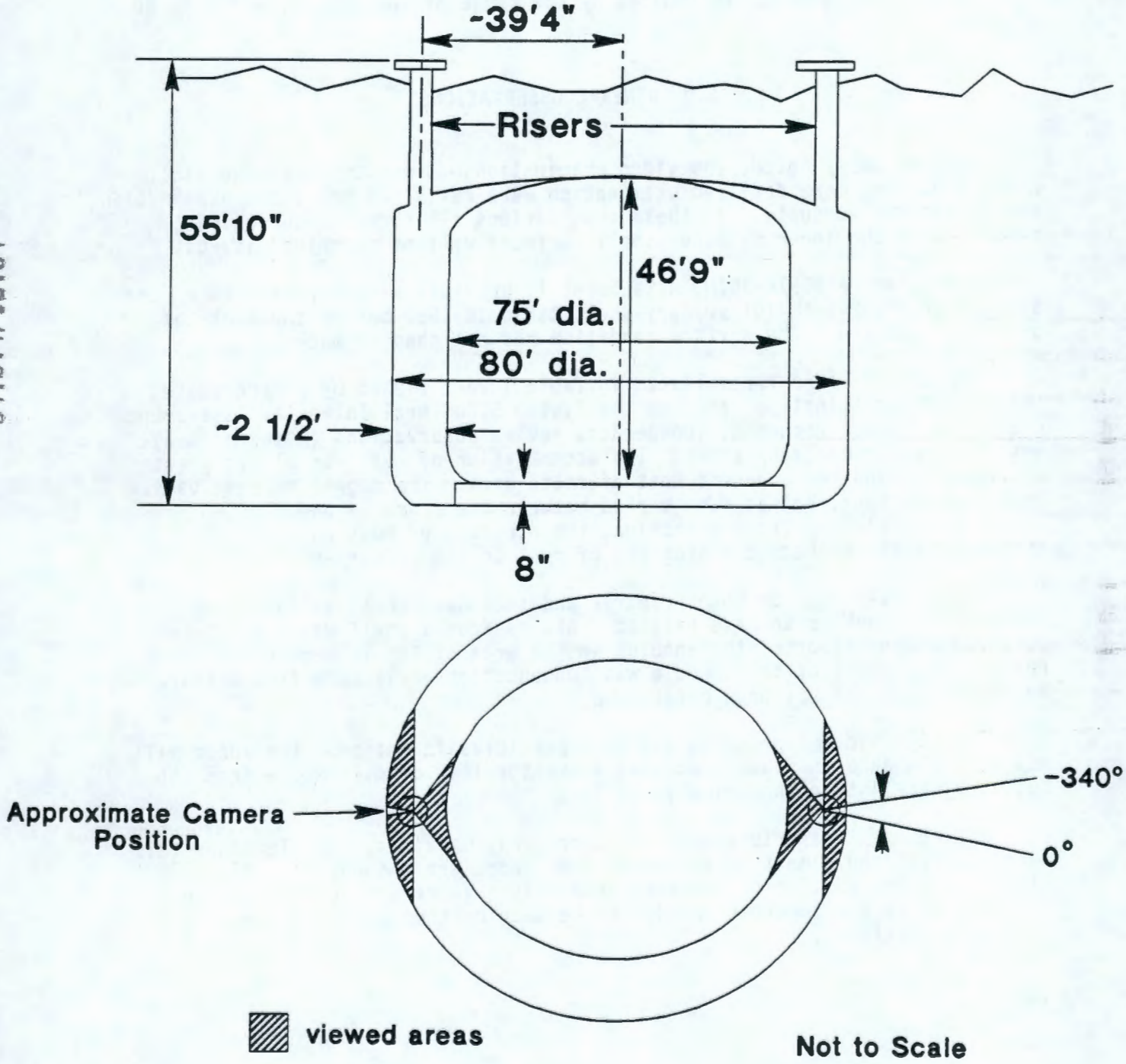


9413147.0134

TABLE 1

LIST OF 241-AN TANK ANNULUS EXAMINATION TAPES
(All tapes reviewed by E. J. Walter)

| Examination tape no. | Examination access riser* | Examination date | Examination depth range (inches) | Date reviewed |
|---|---|---|---|---|
| 1 | 241-AN-101-17E | 04/15/92<br>04/16/92 | 300-648 | 11/19/92 |
| 2 | 241-AN-101-17L | 04/21/92 | 300-644 | 12/02/92 |
| 3 | 241-AN-104-17B | 04/22/92 | 300-642 | 12/07/92 |
| 4 | 241-AN-105-17D | 04/23/92 | 300-642 | 12/09/92 |
| 5 | 241-AN-104-17H | 04/24/92 | 300-642 | 12/10/92 |
| 6 | 241-AN-105-17K | 04/24/92 | 300-642 | 12/11/92 |
| 7 | 241-AN-102-17E | 05/14/92 | 300-636 | 12/14/92 |
| 8 | 241-AN-103-17H | 05/07/92<br>05/11/92 | 300-636 | 12/14/92 |
| 9 | 241-AN-103-17A | 05/12/92 | 300-636 | 12/14/92 |
| 10 | 241-AN-102-17L | 05/12/92<br>05/13/92 | 300-636 | 12/15/92 |
| 11 | 241-AN-106-17H | 05/18/92 | 300-636 | 12/15/92 |
| 12 | 241-AN-107-17C | 05/19/92 | 300-636 | 12/16/92 |
| 13 | 241-AN-106-17C | 05/26/92 | 300-636 | 12/16/92 |
| 14 | 241-AN-107-17H | 05/21/92 | 300-636 | 12/17/92 |

*Reference SD-RE-TI-093, *Double-Shell Underground Waste Storage Tanks, Riser Survey.*

9413147.0135

There is evidence that liquid has drained down the inner and outer surfaces on at least two separate occasions. The evidence of the earlier draining is the corrosion pattern, especially on the outer surface. The corrosion covers a large portion of the surface with some panels showing more corrosion than others, and there are islands where mill scale remains. Evidence of the second draining is a whitish residue that streaks down the height of both the inner and outer tank surfaces, originating in the haunch region. This whitish substance, which generally overlays the rust or mill scale crust, does not appear either to have initiated or accelerated the corrosion process.

Attachment 2 includes three photographs taken from the 241-AN CCTV video tape. Photograph A2-2 is a view of a suspicious area in a vertical weld in the haunch area of the secondary-shell. This weld was made from the external side with a backing plate on the side of the weld viewed by the camera. The camera zooms in on a short segment of the weld seam in the backing plate (Photograph A2-3). This photograph shows a crater-like configuration in the backing plate. Study of this crater led to the conclusion that it had been formed during construction; it appears not to be a threat to the integrity of the weld seam at this time.

Photograph A2-4 is a view of a horizontal weld and two adjoining plates in the primary-shell. This photograph depicts the surface condition of the adjoining plates. The general corrosion on the upper plate has progressed further than that on the lower plate, which retains most of its mill scale. One reason for drawing attention to this condition is to point out that the difference in the degree of corrosion on the two adjoining plates probably reflects corrosion that had begun before the plates were jointed and that has not progressed appreciably since.

## 6.0 CONCLUSIONS AND RECOMMENDATIONS

### 6.1 CONCLUSIONS

The review found no primary-shell leakage, degradation, or defect that would cause any of the tanks or the insulating concrete to be unfit for service. The reviewer believes that the portion of the 241-AN tank surface area examined was adequate to determine that the tanks are not unfit for service.

9413147.0136

## 6.2 RECOMMENDATIONS

- A Kodak[1] color bar should be used inside the annulus or before an annulus is entered to establish a more accurate color comparison.

- The humidity in the annulus should be maintained at 70 percent or less to reduce the potential for corrosion or rust. See *Metals Handbook* (1987, p.511) and Shreir (1963, p.2.11) for the effects of atmospheric factors on corrosion. Precautions should be taken to keep water out of the annulus.

- A comparison examination of these same tank areas should be included in the subsequent periodic integrity assessments of these tanks.

- Long-term plans should evaluate the need to perform examinations through other risers. Based upon the findings a ten year interval ought to be adequate between examinations.

[1]Kodak is a registered trademark of the Eastman Kodak Company.



9413147.0137

## 7.0 REFERENCES

Shreir, L. L., 1963, *Corrosion*, Volume 1, John Wiley & Sons, New York, New York.

Metals Handbook, 1987, *Corrosion*, Ninth Edition, Volume 13, ASM International, Metals Park, Ohio.

Eacker, J. A., 1991, *Tank Farm Project Tank Integrity*, WHC-SD-WM-AP-017, Rev. 0, Westinghouse Hanford Company, Richland, Washington.

Ecology, 1990, "Dangerous Waste Regulations," *Washington Administrative Code*, Chapter 173-303, as amended, Washington State Department of Ecology, Olympia, Washington.

Sumsion, M. L., 1992, *The Acceptance Test Report for Double-Shell Tank Inspections*, WHC-SD-WM-ATR-018, Westinghouse Hanford Company, Richland, Washington.

ASME, "Rules for In-Service Inspection of Nuclear Power Plant Components Section XI," *American Society of Mechanical Engineers Boiler and Pressure Vessel Code*, American Society of Mechanical Engineers, New York, New York.

Sumsion, M. L., 1991, *CCTV Examination Operating Procedure for Double-Shell Tanks*, WHC-SD-WM-TCP-003, Rev. 0, Westinghouse Hanford Company, Richland, Washington.

Walter, E. J., 1992, *Acceptance Test Procedure for Double-Shell Tank Inspections*, WHC-SD-WM-ATP-018, Rev. 0, Westinghouse Hanford Company, Richland, Washington.

Weiss, E. V., 1983, *Double-Shell Underground Waste Storage Tanks - Riser Survey*, SD-RE-TI-093, Rev. 0, Rockwell Hanford Operations, Richland, Washington.

9413147.0138

# APPENDIX

February 9, 1993

## INSTRUCTIONS FOR VISUAL EXAMINATION OF THE TANK ANNULI OF THE DOUBLE-SHELL TANKS

## 1.0 PURPOSE

This instruction provides the procedure for performing visual examinations of the tank annuli of the double-shell tanks in the tank farms in the 200 Areas.

## 2.0 SCOPE

The scope of this instruction includes the prerequisites for performing the examination, performance of the examination, and preparation of a report.

## 3.0 RESPONSIBILITIES

### 3.1 ENGINEERING SURVEILLANCE AND TESTING GROUP

The Engineering Surveillance and Testing group is responsible for providing the examination system, for qualifying the examination system, and for performing the examination.

### 3.2 SYSTEM STRUCTURAL INTEGRITY ASSESSMENTS

The System Structural Integrity Assessments group is responsible for providing the examination requirements, examination oversight, qualified evaluators, and an evaluation and report of the examination results.

## 4.0 REQUIREMENTS

The requirement for performing the visual examination of the primary- and secondary tank surfaces from within the annulus using closed circuit television is found in the *Tank Farm Project Tank Integrity Assessment Program Plan*, WHC-SD-WM-AP-017.



9413147.0139

Qualification of the closed circuit television (CCTV) system is required through the *Acceptance Test Procedure for Double-Shell Tank Inspections*, WHC-SD-WM-ATP-018 and the *Acceptance Test Report for Double-Shell Tank Inspections*, WHC-SD-WM-ATR-018.

The visual examination shall be performed in accordance with the *CCTV Examination Operating Procedure for the Double-Shell Tanks*, WHC-SD-WM-TCP-003.

The evaluation and report shall include information as available to meet the following objective.

> "The objective of visual examination is to determine whether there is evidence of leakage of liquid waste from the primary-shell into the annulus, to check for leakage through the secondary-shell, provide a baseline record for subsequent examinations, evaluate the corrosiveness of the environment of the primary- and secondary-shell surfaces, and to provide a survey of the annulus for material surface condition and for hardware inside the annulus that could restrict or obstruct the performance of non-destructive material examinations being planned."

9413147.0140

## 5.0 PROCEDURE

### 5.1 PRE-EXAMINATION ACTIVITIES

The pre-examination activities, such as scheduling, permits, and safety reviews shall be performed in accordance with the *CCTV Examination Operating Procedure for the Double-Shell Tanks*, WHC-SD-WM-TCP-003.

### 5.2 EXAMINATION PERFORMANCE

The visual examination of the double-shell tank annuli shall be performed in accordance with the *CCTV Examination Operating Procedure for the Double-Shell Tanks*, WHC-SD-WM-TCP-003. This operating procedure includes the following:

- The scope of the examination
- The systematic viewing procedure
- General areas to be included in the examination
- Guidelines identifying conditions that may receive more detailed examination
- Verification check sheets used as examination record

The temperature and radiation dose rate in the annuli is also measured and recorded to prevent the use of examination equipment that may not be compatible with the annulus environment.

## 5.3 EXAMINATION REPORT

The examination report should include the following information.

- Describe the configuration and construction of the double-shell tanks, specifically in the annulus area.
- Describe the methods and the equipment used to perform the visual examination.
- Review the *Acceptance Test Procedure for Double-Shell Tank Inspections*, WHC-SD-WM-ATP-018, the *Acceptance Test Report for Double-Shell Tank Inspections*, WHC-SD-WM-ATR-018, and the *CCTV Examination Operating Procedure for the Double-Shell Tanks*, WHC-SD-WM-TCP-003.
- Review the completed check sheets and environmental information recorded during the examination. Be alert for record of any unusual findings, such as leakage or other abnormalities.
- Review the video tapes and record findings in a manner that enables a second independent party to readily access and view the section of the tape from which a specific finding was recorded.
- Prepare a report from these recorded findings and examination records that responds to the objectives and requirements stated above.
- Issue the report in accordance with the requirements of the *Standard Engineering Practices*, WHC-CM-6-1.

9413147.0141

# ATTACHMENT 1

## Photograph, Annulus Tank 241-AW-101

9413147.0142

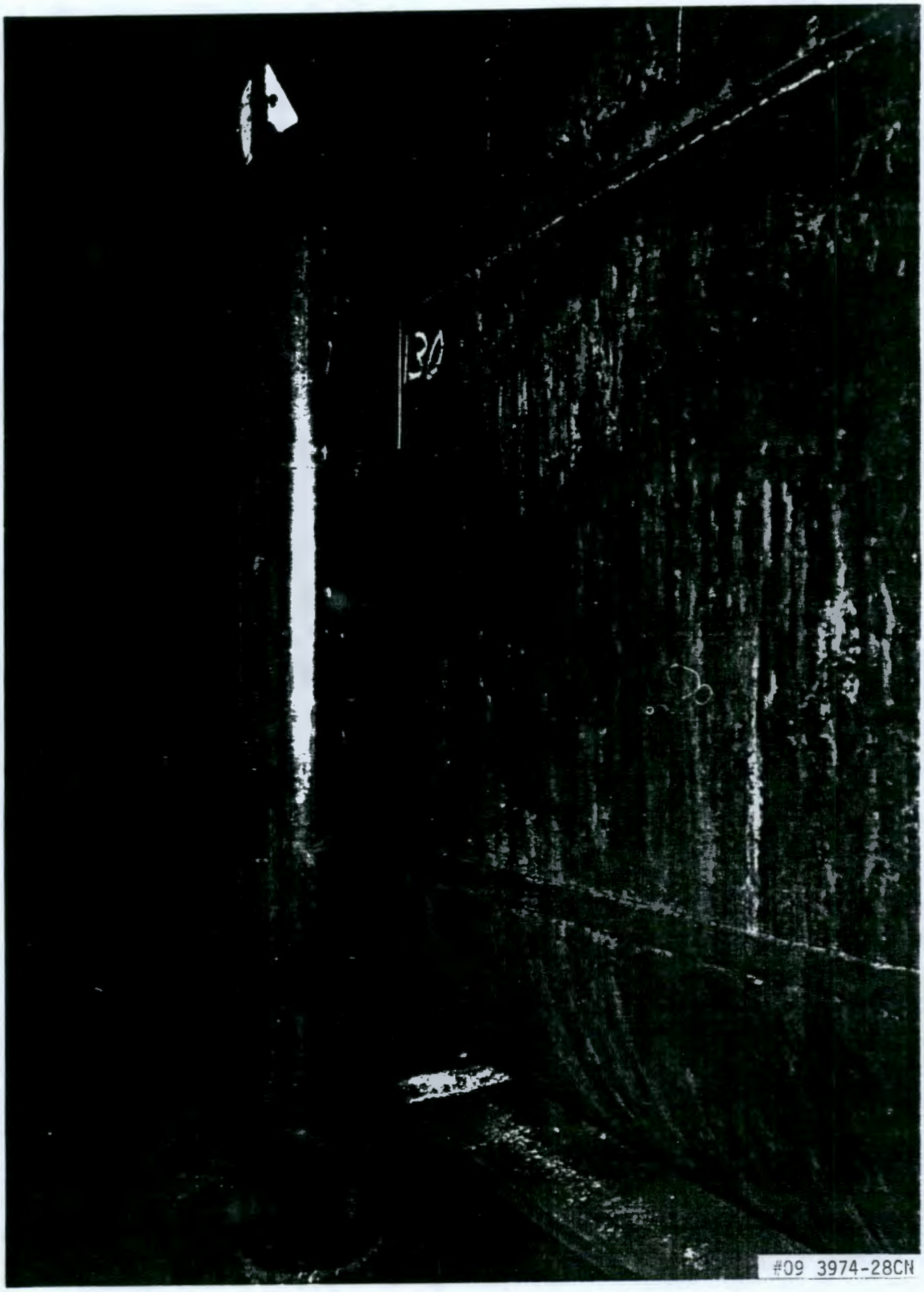


9413147.0143

# ATTACHMENT 2

## Examination Photographs

9413147.0144

9413147.0145

9413147.0146

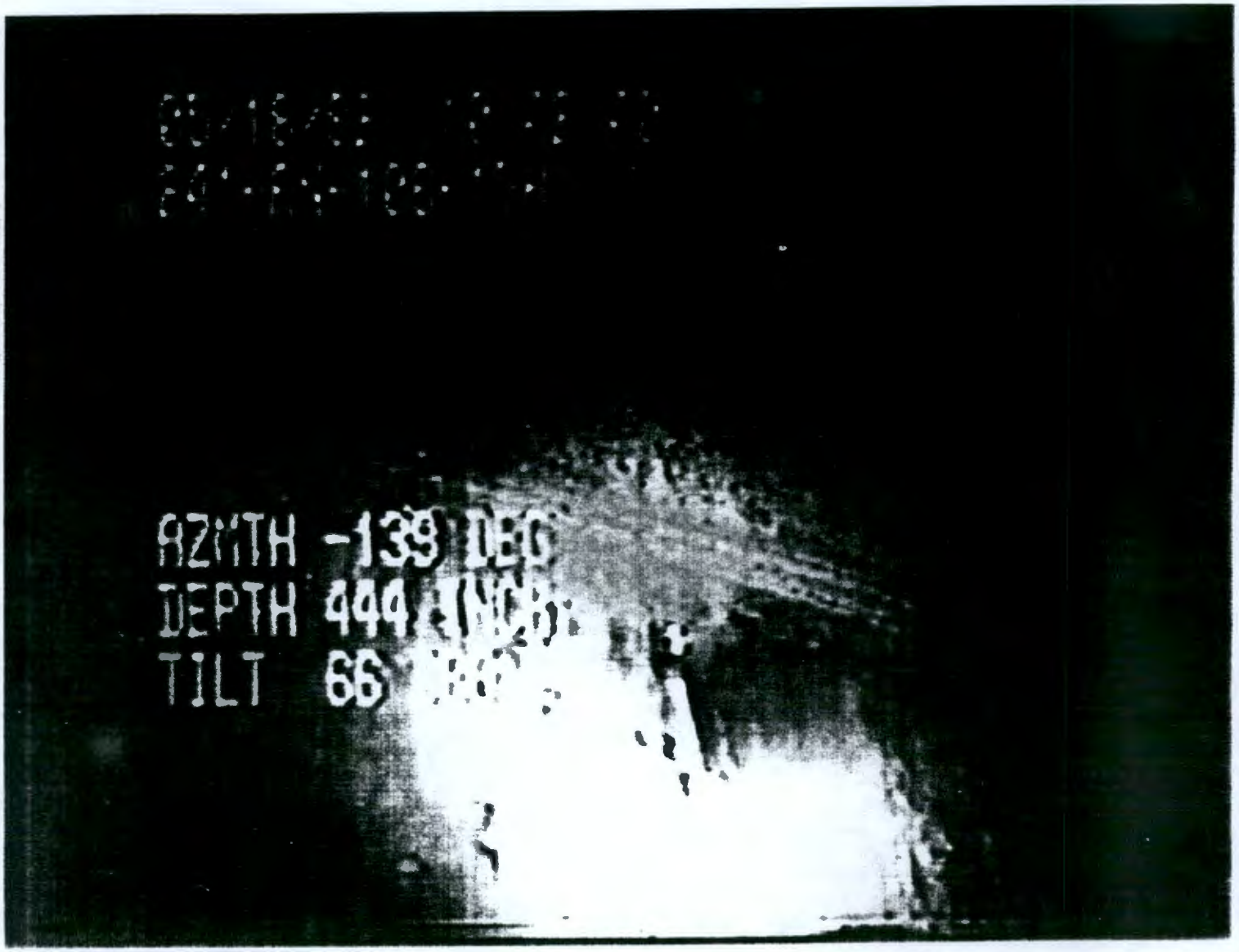


9413147.0147

# ATTACHMENT 3

## Video Examination Record - Double-Shell Tank Annulus
## 241-AN Tanks

9413147.0148

# Video Examination Record - Double-Shell Tank Annulus

Date: 11/19/92

Tank Number: 241-AN-101-17E  Examination Date: 04/16/92  Tape Number: AN #1

Reviewer: E. J. Walter/ EJ Walter (Print/Signature)

| Tape Time | | Complementary Information | | | Reviewer Comments |
|---|---|---|---|---|---|
| Hr | Min | Azim. (Deg.) | Depth (in.) | Tilt (Deg.) | |
| 8 | 45 | 0 | 300 | -0 | Start |
| | | 0 | 300 | -76° | A flake of mill scale, several square inches in size appears to have fallen off the outer shell surface. |
| 9 | 57 | -40 | 300 | 71 | A dark spot on the outer surface and lighter circular spots are noticed in the haunch area. |
| * | * | -200 | 300 | 15 | Remnants of a thermocouple welded or soldered to inner shell surface are observed. A majority of the mill scale remains attached to the inner annulus surface. |
| * | * | -240 | 300 | 69 | The area along and below the circumferential weld to the haunch is rusted moderately. Areas above this weld retain much of the mill scale. |
| * | * | -20 | 444 | 47 | A small patch of heavier than normal rust not related to a weld is in view. There is not enough detail to draw conclusions. |
| 1 | 21 | -40 | 492 | -32 | The ventilation pipe surface does not appear to be as weathered as the shell surfaces. |

*Not Shown



9413147.0149

## Video Examination Record - Double-Shell Tank Annulus

Date: 11/19/92

Tank Number: 241-AN-101-17E  Examination Date: 04/16/92  Tape Number: AN #1

Reviewer: E. J. Walter/ E J Walter (Print/Signature)

| Tape Time | | Complementary Information | | | Reviewer Comments |
|---|---|---|---|---|---|
| Hr | Min | Azim. (Deg.) | Depth (in.) | Tilt (Deg.) | |
| 1 | 58 | -200 | 588 | -40 | There is a stain on the annulus floor that appears to have been a puddle of water. It is located near the group of conduits which fan out toward their various destinations. |
| 2 | 12 | -190 | 648 | 5 | The concrete pad beneath the primary vessel does not appear to be degrading. The outer wall shows more general corrosion and corrosion along the welds than the inner wall. Chalk marks, in some cases appear to have been made since the corrosion occurred. |



9413147.0150

# Video Examination Record - Double-Shell Tank Annulus

Date: 12/02/92

Tank Number: 241-AN-101-17L  Examination Date: 04/21/92  Tape Number: AN #2

Reviewer: E. J. Walter/ E J Walter (Print/Signature)

| Tape Time | | Complementary Information | | | Reviewer Comments |
|---|---|---|---|---|---|
| Hr | Min | Azim. (Deg.) | Depth (in.) | Tilt (Deg.) | |
| 9 | 57 | 0 | 300 | 62 | On the outer wall the parent material above the circumferential weld has significant mill scale in place while the material surface below this circumferential weld has significant flaking of mill scale. |
| 10 | 27 | -20 | 396 | -59 | In the distance it appears that a circular weld, possibly a fabrication access port, was made in the lower section of the outside wall. |
| 1 | 12 | -20 | 492 | -68 | An insect or a particle of some sort passed by the camera. |
| 1 | 36 | -20 | 588 | -30 | A support, presumably from construction scaffolding appears to be partially jerked loose from the secondary wall. |
| 1 | 41 | -120 | 588 | -36 | There appears to be a horizontal surface irregularity, a small rust line. Attention should be given to this area during the next exam. |
| 1 | 58 | -45 | 644 | -6 | Summary - outer wall surface shows significantly more flaking and rust, especially along the welds and heat affected zone, than the inner vessel surfaces. The instrumentation penetration joint near the bottom of the vessel looked crude, but no evidence of leakage. The insulating concrete looked OK. Annulus floor has a heavy dusting of fallen mill scale. |



9413147.0151

# Video Examination Record - Double-Shell Tank Annulus

Date: 12/07/92

Tank Number: 241-AN-104-17B  Examination Date: 04/22/92  Tape Number: AN #3

Reviewer: E. J. Walter/ E.J. Walter (Print/Signature)

| Tape Time | | Complementary Information | | | Reviewer Comments |
|---|---|---|---|---|---|
| Hr | Min | Azim. (Deg.) | Depth (in.) | Tilt (Deg.) | |
| 9 | 22 | -12 | 300 | -6 | Start. |
| 9 | 33 | -207 | 300 | 84 | As in other areas, there are run markings on the inner vessel surface apparently originating at the intersection between the secondary and primary vessel, in the haunch region. These light colored markings, possibly from concrete leak thru, extend from the top to the bottom, but do not appear to have a degrading effect on the surface. |
| 9 | 43 | -20 | 348 | 42 | A strip of material, possibly plastic tape, is stuck on the outer annulus surface. |
| 10 | 01 | -60 | 396 | 720 | Both inner and outer surfaces have evidence that some liquid drained down at some prior time. Evidence of related corrosion at the whitish residue was not observed. |
| 2 | 07 | -61 | 642 | -10 | The annulus floor has a heavy dusting of mill scale, rust & a few pieces of rock-like substance. The insulating concrete looked okay. The inner surface had less rusting than the outer surface. Significant degradation of the vessel walls due to rusting was not apparent. |



9413147.0152

# Video Examination Record - Double-Shell Tank Annulus

Date: 12/09/92

Tank Number: 241-AN-105-17D  Examination Date: 04/23/92  Tape Number: AN #4

Reviewer: E. J. Walter/ EJWalter (Print/Signature)

| Tape Time | | Complementary Information | | | Reviewer Comments |
|---|---|---|---|---|---|
| Hr | Min | Azim. (Deg.) | Depth (in.) | Tilt (Deg.) | |
| 10 | 03 | 0 | 300 | -84 | Start. |
| 10 | 20 | -20 | 300 | 84 | It appears that a rivulet in the haunch portion of the outer shell has corroded thru the mill scale to an unknown extent, but degradation is not thought to be serious. Perhaps this is caused by ongoing leakage of surface water into the annulus. The image is similar in size and shape to a weld joint. |
| 13 | 25 | -140 | 444 | -59 | A thermocouple, welded or brazed to the surface of the primary vessel is in view. |
| 13 | 35 | -33 | 492 | -68 | Corrosion or splattered foreign material possibly concrete, is seen on the conduit. It is of similar color to the galvanized conduit. |
| 14 | 31 | -30 | 642 | -11 | The leak detector probe appears to be static and possibly touching the annulus floor. The probes in other tanks, in at least some cases had a pendulum motion and did not appear to touch the annulus floor. There is evidence of a small dried puddle at the sensor. The annulus floor has a heavy dusting of mill scale, rust and a few particles of unknown origin. END. |



9413147.0153

# Video Examination Record - Double-Shell Tank Annulus

Date: 12/10/92

Tank Number: 241-AN-104-17H  Examination Date: 04/24/92  Tape Number: AN #5

Reviewer: E. J. Walter/ E.J. Walter (Print/Signature)

| Tape Time | | Complementary Information | | | Reviewer Comments |
|---|---|---|---|---|---|
| Hr | Min | Azim. (Deg.) | Depth (in.) | Tilt (Deg.) | |
| 9 | 22 | 0 | 300 | -52 | Start. |
| 9 | 33 | -180 | 300 | 75 | Discoloration of the outer vessel in the haunch area is noticed but not thought to be of significance. The camera zoomed in well on this area. |
| 1 | 28 | -27 | 642 | 2 | A length of conduit or tubing, ~1", is lying on the annulus floor. An object, appearing to be a roll of white tape was seen on the floor in the opposite direction. |
| 1 | 33 | -9 | 642 | 0 | END. |



9413147.0154

# Video Examination Record - Double-Shell Tank Annulus

Date: 12/11/92

Tank Number: 241-AN-105-17K  Examination Date: 04/27/92  Tape Number: AN #6

Reviewer: E. J. Walter/ EJ Walter (Print/Signature)

| Tape Time | | Complementary Information | | | Reviewer Comments |
|---|---|---|---|---|---|
| Hr | Min | Azim. (Deg.) | Depth (in.) | Tilt (Deg.) | |
| 9 | 04 | 0 | 300 | -68 | Start. |
| 9 | 07 | -40 | 300 | 82 | The haunch of the outer vessel has a patched discoloration thought to be residue from a dried water puddle collected from rain before this section was welded into place. |
| 13 | 05 | -80 | 540 | -58 | Most of the mill scale on the primary vessel surface remains in place and a lesser amount of the mill scale on the outer vessel is in place. |
| 13 | 37 | -108 | -642 | 3 | There is residue, whitish in color and dried, remaining on the insulation pad. Through runs are seen going down both the inner and outer walls, evidence of this liquid or material on the annulus floor is near non-existent. Perhaps the floor has been since cleaned. |
| 13 | 40 | -75 | 642 | -23 | The metal form around the insulation pad has flaking rust, but this should not be significant. |
| 13 | 41 | -9 | 642 | -9 | END. |



9413147.0155

# Video Examination Record - Double-Shell Tank Annulus

Date: 12/14/92

Tank Number: 241-AN-102-17E  Examination Date: 05/14/92  Tape Number: AN #7

Reviewer: E. J. Walter/ EJWalter (Print/Signature)

| Tape Time | | Complementary Information | | | Reviewer Comments |
|---|---|---|---|---|---|
| Hr | Min | Azim. (Deg.) | Depth (in.) | Tilt (Deg.) | |
| 9 | 17 | 0 | 300 | -81 | Start. |
| 9 | 21 | -40 | 300 | 79 | The camera is panning in on a spot in the haunch area which appears to have been discolored by puddle of water. |
| 9 | 46 | -120 | 348 | 13 | Both inner and outer (more so) surfaces show general corrosion with a significant amount of the mill scale no longer in place. It is noted that the white residue, originating in the area where the outer haunch meets the primary vessel and running downward over both inner and outer surface, appears to have occurred AFTER most of the corrosion or rusting. |
| 1 | 33 | -80 | 5882 | -51 | A carbuncle looking blemish appears on the inner surface. It appears to be a protrusion from surface, roughly 1" diameter. It is not adjacent to a weld or other suspect indication. |
| 1 | 57 | -7 | 636 | 8 | The annulus floor has a heavy dusting of flakes of rust & mill scale. Both the inner and outer surfaces have more general rusting than normally seen. However, degradation is not thought to have a significant effect on the vessel integrity. |



9413147.0156

# Video Examination Record - Double-Shell Tank Annulus

Date: 12/14/92

Tank Number: 241-AN-103-17H  Examination Date: 05/07/92 & 05/11/92  Tape Number: AN #8

Reviewer: E. J. Walter/ E J Walter (Print/Signature)

| Tape Time | | Complementary Information | | | Reviewer Comments |
|---|---|---|---|---|---|
| Hr | Min | Azim. (Deg.) | Depth (in.) | Tilt (Deg.) | |
| 13 | 40 | 0 | 300 | -38 | Start. |
| 13 | 41 | 0 | 300 | 36 | There is a discoloration at the lower end of a vertical weld in the haunch segment of the outer surface. The origin or cause of the discoloration is not understood. |
| 9 | 42 | -40 | 348 | -21 | Continuation from yesterday - Cross-hatch markings are noticed on one of the inner surface panels. The vertical weld appears to be crusty with rust but the image is not clear. |
| 1 | 26 | -159 | 348 | 39 | The contour of the inner surface corrosion is as if a liquid draining from top toward bottom had caused it. |
| 2 | 21 | -20 | 540 | -28 | A rather heavy coating of rust along a circumferential weld and extending below the weld is seen. The image definition is not as clear as desired. |
| 2 | 36 | -20 | 588 | -26 | In the distance, on the floor of the annulus, appears an indication of a drip from above. |
| 2 | 58 | -43 | 636 | -4 | A white substance probably residue from the material that drained from top of vessel, is on the isolation pad and on the annulus floor. There is no obvious problem with this substance. |



9413147.0157

# Video Examination Record - Double-Shell Tank Annulus

Date: 12/14 & 12/15/92

Tank Number: 241-AN-103-17A  Examination Date: 05/12/92  Tape Number: AN #9

Reviewer: E. J. Walter/ E J Walter (Print/Signature)

| Tape Time | | Complementary Information | | | Reviewer Comments |
|---|---|---|---|---|---|
| Hr | Min | Azim. (Deg.) | Depth (in.) | Tilt (Deg.) | |
| 9 | 00 | 0 | 300 | -65 | Start. |
| 9 | 01 | -20 | 300 | -29 | Particles appear to be flowing upward and toward the camera. Origin or cause is unknown. |
| 9 | 44 | -220 | 396 | 70 | The rust on a vertical weld and heat affected area appears more advanced than normal. Perhaps the camera position magnifies the effect. |
| 10 | 08 | -60 | 492 | 3 | There are chicken wire configured markings on the inner vessel surface, possibly a result of the heat treatment. |
| 10 | 41 | -26 | 588 | -88 | A pile of whitish substance is noticed on the annulus floor. |
| 10 | 50 | -200 | 588 | -76 | The surface of the vent pipe suggests that the annulus may have been filled with liquid to a depth of ~9", judging by the sediment marking on the 4" vent pipe. The vent pipe shows negligible corrosion. |
| 11 | 03 | -15 | 636 | 0 | The camera panned on the steel isolation pad form. This steel form is showing heavy flakes of rust. The annulus floor had a heavy dusting of mill scale & rust. |



9413147.0158

# Video Examination Record - Double-Shell Tank Annulus

Date: 12/15/92

Tank Number: 241-AN-102-17L  Examination Date: 05/12 & 05/13/92  Tape Number: AN #10

Reviewer: E. J. Walter/ EJWalter (Print/Signature)

| Tape Time | | Complementary Information | | | Reviewer Comments |
|---|---|---|---|---|---|
| Hr | Min | Azim. (Deg.) | Depth (in.) | Tilt (Deg.) | |
| 1 | 43 | -1 | 300 | -66 | Start. |
| 1 | 45 | -20 | 300 | 20 | The area above the outer vessel circumferential weld to the haunch shows minor corrosion with the mill scale in place and area below this weld shows general corrosion and most of the mill scale is gone. |
| 1 | 55 | -200 | 300 | 85 | There are yellowish patches of discoloration of unknown origin in the haunch of the outer vessel. Evidence of corrosion in the patch areas are not found. |
| 9 | 41 | -38 | 492 | -66 | The leak detector has a pendulum action and it appears that a wet spot exists just below the sensor. |
| 10 | 25 | -80 | 588 | 67 | During the past few feet it appeared that a small insect was walking across the lens of the camera. |
| 10 | 40 | -35 | 636 | 11 | The leak detector is swinging less than 1" off the floor, the dark spot mentioned earlier may be caused by sensor's pendulum motion. |
| 10 | 42 | -144 | 636 | 6 | There is a discoloration on the primary vessel surface, origin unknown. |
| 10 | 44 | -10 | 636 | 1 | There is a discoloration in the weld area of the lowest circumferential weld of the outside wall, origin unknown. The annulus floor has a heavy dusting of mill scale and rust debris. |



9413147.0159

# Video Examination Record - Double-Shell Tank Annulus

Date: 12/15/92

Tank Number: 241-AN-106-17H  Examination Date: 05/18/92  Tape Number: AN #11

Reviewer: E. J. Walter/ E J Walter (Print/Signature)

| Tape Time | | Complementary Information | | | Reviewer Comments |
|---|---|---|---|---|---|
| Hr | Min | Azim. (Deg.) | Depth (in.) | Tilt (Deg.) | |
| 9 | 28 | 0 | 300 | -27 | Start. |
| 9 | 29 | -20 | 300 | 53 | A vertical weld in the haunch outer wall has evidence of excessive rusting in a local area just above the circumferential weld junction. The cause is unknown but is possible due to weld repair or weld procedure irregularity. There is no evidence of leakage. |
| 10 | 46 | -200 | 444 | 18 | There is evidence of 2 sets of numerous runs of liquid down the surface of the inner and outer walls. The earlier set of liquid runs resulted in a pattern of corrosion, especially on the outer surface. The second or latter run resulted in a whitish residue which does not appear to have initiated or accelerated the corrosion process. |
| 1 | 55 | -10 | 636 | -28 | The annulus floor has a heavy dusting of mill scale and rust. As in previous observations, a larger portion of the outer surface mill scale has disappeared. No significant degradation of the inner or outer walls was ascertained. |



9413147.0160

## Video Examination Record - Double-Shell Tank Annulus

Date: 12/16/92

Tank Number: 241-AN-107-17C  Examination Date: 05/19/92  Tape Number: AN #12

Reviewer: E. J. Walter/ EJWalter (Print/Signature)

| Tape Time | | Complementary Information | | | Reviewer Comments |
|---|---|---|---|---|---|
| Hr | Min | Azim. (Deg.) | Depth (in.) | Tilt (Deg.) | |
| 8 | 55 | 0 | 300 | -56 | Start. |
| 8 | 58 | 0 | 300 | 56 | There is evidence of general corrosion beginning and including the circumferential weld at the lower end of the outer vessel haunch and continuing downward. Corrosion above this weld is significantly lighter. |
| 1 | 30 | -10 | 636 | 0 | The dust, mill scale and rust on the annulus floor appears to be greater than observed in most cases.<br>General Comment: The residue of numerous and varied runs has effectively masked the primary shell surface in these areas. |



9413147.0161

## Video Examination Record - Double-Shell Tank Annulus

Date: 12/16/92

Tank Number: 241-AN-106-17C  Examination Date: 05/26/92  Tape Number: AN #13

Reviewer: E. J. Walter/ EJWalter (Print/Signature)

| Tape Time | | Complementary Information | | | Reviewer Comments |
|---|---|---|---|---|---|
| Hr | Min | Azim. (Deg.) | Depth (in.) | Tilt (Deg.) | |
| 8 | 44 | 0 | 300 | -69 | Start. |
| 1 | 42 | -84 | 636 | 12 | A blemish is noted on the tank surface. It's origin is unknown, possibly an arc or a thermocouple sensor welded to the tank. It is circled with a white marker, which indicates that it received attention earlier. Its significance is inconclusive. |
| 1 | 43 | -84 | 636 | -36 | Observations have been typical, more general corrosion on outer surface than the inner. No specific significant degradation was noticed.. |



9413147.0162

## Video Examination Record - Double-Shell Tank Annulus

Date: 12/17/92

Tank Number: 241-AN-107-17H  Examination Date: 05/21/92  Tape Number: AN #14

Reviewer: E. J. Walter/ EJWalter (Print/Signature)

| Tape Time | | Complementary Information | | | Reviewer Comments |
|---|---|---|---|---|---|
| Hr | Min | Azim. (Deg.) | Depth (in.) | Tilt (Deg.) | |
| 9 | 59 | 0 | 300 | -58 | Start. |
| 10 | 02 | -20 | 300 | 54 | It appears that there are longitudinal voids of significant size in the backup bar on the vertical weld in the haunch. The camera panned in on one void to give more visibility to the void. It is concluded that this condition was evaluated and accepted during construction. Possibly these voids resulted from irregular welding procedures and suck back during welding. |
| 10 | 31 | -220 | 348 | 30 | An unknown small creature crawling on the inner surface was observed. |
| 13 | 02 | -120 | 492 | --- | A fly-like insect was observed. |
| 13 | 55 | -18 | 636 | 4 | The annulus floor has a heavy dusting of mill scale and rust with larger diverse particles mixed in. Most of the outer surface mill scale is gone, due to corrosion. The inner surface is corroded to a lesser degree. |



9413147.0163

# DISTRIBUTION SHEET

WHC-SD-WM-RPT-076
REV. 0

To: Tank Farms Technical Assessments

From: System Structural Integrity Assessments

Date: Sept. 1993

Project Title/Work Order:

VISUAL EXAMINATION REPORT FOR TANK ANNULI AT THE 241-SY TANK FARM

EDT No.: 140989

ECN No.:

| Name | MSIN | With Attachment | EDT/ECN & Comment | EDT/ECN Only |
|---|---|---|---|---|
| L. D. Blackburn | H5-67 | X | | |
| W. C. Carlos | H5-52 | X | | |
| R. A. Dodd | R1-51 | X | | |
| D. J. Green | H5-53 | X | | |
| J. Harris (5) | H5-52 | X | | |
| J. P. Hauptmann | S2-03 | X | | |
| R. Malhan | S1-57 | X | | |
| V. D. Maupin | R1-51 | X | | |
| M. A. McLaughlin | H5-34 | X | | |
| D. C. Pfluger | H5-52 | X | | |
| R. S. Popielarcyk | R1-30 | X | | |
| D. L. Powell Jr. | L6-13 | X | | |
| L. Ruffin | R2-95 | X | | |
| E. B. Schwenk | H5-52 | X | | |
| K. V. Scott | H5-52 | X | | |
| D. B. Smet | X5-52 | X | | |
| J. D. Thomson | R1-30 | | | X |
| F. R. Vollert | H5-09 | X | | |
| E. J. Walter | H5-52 | X | | |
| Central Files (Orig. + 3 copies) | L8-04 | X | | |
| ~~Station 21~~ | ~~H5-51~~ | | | ~~X~~ |
| ~~IRA Clearance~~ | ~~H4-17~~ | ~~X~~ | | |

9413147.0164

| Date Received: 9/22/93 | INFORMATION RELEASE REQUEST | Reference: WHC-CM-3-4 |
|---|---|---|

**Complete for all Types of Release**

| Purpose | | ID Number (include revision, volume, etc.) |
|---|---|---|
| [] Speech or Presentation<br>[] Full Paper<br>[] Summary<br>[] Abstract<br>[] Visual Aid<br>[] Speakers Bureau<br>[] Poster Session<br>[] Videotape<br>(Check only one suffix) | [] Reference<br>[X] Technical Report<br>[] Thesis or Dissertation<br>[] Manual<br>[] Brochure/Flier<br>[] Software/Database<br>[] Controlled Document<br>[] Other | WHC-SD-WM-RPT-076, Rev. 0<br>List attachments.<br>N/A<br>Date Release Required<br>09/20/93 |

| Title | Unclassified Category | Impact Level |
|---|---|---|
| VISUAL EXAMINATION REPORT FOR TANK ANNULI AT THE 241-SY TANK FARM | UC- | K3Q |

| | |
|---|---|
| New or novel (patentable) subject matter? [X] No [] Yes<br>If "Yes", has disclosure been submitted by WHC or other company?<br>[] No [] Yes Disclosure No(s). | Information received from others in confidence, such as proprietary data, trade secrets, and/or inventions?<br>[X] No [] Yes (Identify) |
| Copyrights? [X] No [] Yes<br>If "Yes", has written permission been granted?<br>[] No [] Yes (Attach Permission) | Trademarks?<br>[] No [X] Yes (Identify) Kodak (pg. 8) |

**Complete for Speech or Presentation**

| Title of Conference or Meeting | Group or Society Sponsoring |
|---|---|
| | |

| Date(s) of Conference or Meeting | City/State | Will proceedings be published? | Will material be handed out? |
|---|---|---|---|
| | | [] Yes [] No | [] Yes [] No |

Title of Journal

**CHECKLIST FOR SIGNATORIES**

| Review Required per WHC-CM-3-4 | Yes | No | Reviewer - Signature Indicates Approval: Name (printed) | Signature | Date |
|---|---|---|---|---|---|
| Classification/Unclassified Controlled Nuclear Information | [] | [X] | | | |
| Patent - General Counsel | [X] | [] | SW Berglin | PER OGC MEMO | 2/4/93 |
| Legal - General Counsel | [X] | [] | SW Berglin | PER OGC MEMO | 2/4/93 |
| Applied Technology/Export Controlled Information or International Program | [] | [X] | | | |
| WHC Program/Project | [] | [X] | | | |
| Communications | [] | [X] | | | |
| RL Program/Project | [] | [X] | No Review Required Per telecon | | 9/21/93 |
| Publication Services | [X] | [] | DJ Hastings | per telecon | 9/20/93 |
| Other Program/Project | [] | [X] | | | |

Information conforms to all applicable requirements. The above information is certified to be correct.

| | Yes | No |
|---|---|---|
| References Available to Intended Audience | [X] | [] |
| Transmit to DOE-HQ/Office of Scientific and Technical Information | [] | [X] |

Author/Requestor (Printed/Signature) Date

J. Harris 9/20/93

Intended Audience

[] Internal [] Sponsor [X] External

Responsible Manager (Printed/Signature) Date

K. V. Scott 9/21/93

**INFORMATION RELEASE ADMINISTRATION APPROVAL STAMP**

Stamp is required before release. Release is contingent upon resolution of mandatory comments.

APPROVED FOR RELEASE OFFICIAL NS 9/22/93

| Date Cancelled | Date Disapproved |
|---|---|
| | |

9413147.0165

ID Number WHC-SD-WM-RPT-076, Rev. 0

| Lead Author | Phone | MSIN | Other Author(s) or Requestor |
|---|---|---|---|
| J. Harris | 6-3838 | H5-52 | None |
| **Project or Program** | **Lead Org Code** | | **Sponsor Agency (DOE, DOT, NRC, USGS, etc.)** |
| Tank Farm | 23460 | | DOE |
| **Editor** D. J. Hastings | **Phone** 6-9185 | **MSIN** H6-31 | **DOE/HQ Program (DP, EH, EM, NE, etc.)** EM |

| Mandatory Comments (Only mandatory comments are to be documented. All other comments should be made on a copy of the information submitted for review and returned to the author.) | Reviewer Name & Signature | Date | Resolution | Reviewer Name & Signature | Date |
|---|---|---|---|---|---|
| | | | | | |
| | | | | | |
| | | | | | |
| | | | | | |
| | | | | | |
| | | | | | |
| | | | | | |
| | | | | | |
| | | | | | |
| | | | | | |
| | | | | | |
| | | | | | |
| | | | | | |

Legends/Notices/Markings (required per WHC-CM-3-4 or guidance organization.) (Reviewer initials)

| | Affix Yes | Affix No | | Affix Yes | Affix No |
|---|---|---|---|---|---|
| Applied Technology | [ ] | [ ] | Predecisional Information | [ ] | [ ] |
| Business-Sensitive Information | [ ] | [ ] | Programmatic Notice | | |
| Computer Software Notice | [ ] | [ ] | Proprietary Information | [ ] | [ ] |
| Copyright License Notice | [ ] | [ ] | Purpose and Use | [ ] | [ JDS ] |
| Export Controlled Information | [ ] | [ ] | Thesis/Dissertation | [ ] | [ ] |
| Legal Disclaimer | [ JDS ] | [ ] | Trademark Disclaimer | [ ] | [ ] |
| Limited Disclosure | [ ] | [ ] | Unclassified Controlled Nuclear Information/Official Use Only | [ ] | [ ] |
| Patent Status | [ ] | [ JDS ] | | | |

N/A

Responsible Manager (Printed/Signature)

Additional Information

9413147.0166

SEP 22 1993
Sta. 21 : 20

# ENGINEERING DATA TRANSMITTAL

Page 1 of 1

1. EDT 140999

| | | |
|---|---|---|
| 2. To: (Receiving Organization) Fluids Systems Engineering | 3. From: (Originating Organization) System Structural Integrity Assessment | 4. Related EDT No.: 140954 |
| 5. Proj./Prog./Dept./Div.: W23460/N13AB | 6. Cog. Engr.: J. Harris | 7. Purchase Order No.: N/A |
| 8. Originator Remarks: The photographs in the final issue will be color xeroxed. | | 9. Equip./Component No.: N/A |
| | | 10. System/Bldg./Facility: 241-SY |
| 11. Receiver Remarks: | | 12. Major Assm. Dwg. No.: N/A |
| | | 13. Permit/Permit Application No.: N/A |
| | | 14. Required Response Date: 09/03/93 |

9413147.0167

15. DATA TRANSMITTED

| (A) Item No. | (B) Document/Drawing No. | (C) Sheet No. | (D) Rev. No. | (E) Title or Description of Data Transmitted | (F) Impact Level | (G) Reason for Transmittal | (H) Originator Disposition | (I) Receiver Disposition |
|---|---|---|---|---|---|---|---|---|
| 1 | WHC-SD-WM-RPT-076 | | 0 | Visual Examination of Tank Annuli at the 241-SY Tank Farm | ~~24~~ 3QA | 1 | 1 | |
| | | | | | | | | |
| | | | | | | | | |
| | | | | | | | | |
| | | | | | | | | |

16. KEY

| Impact Level (F) | Reason for Transmittal (G) | Disposition (H) & (I) |
|---|---|---|
| 1, 2, 3, or 4 (see MRP 5.43) | 1. Approval 2. Release 3. Information 4. Review 5. Post-Review 6. Dist. (Receipt Acknow. Required) | 1. Approved 2. Approved w/comment 3. Disapproved w/comment 4. Reviewed no/comment 5. Reviewed w/comment 6. Receipt acknowledged |

17. SIGNATURE/DISTRIBUTION (See Impact Level for required signatures)

| (G) Reason | (H) Disp. | (J) Name | (K) Signature | (L) Date | (M) MSIN | (J) Name | (K) Signature | (L) Date | (M) MSIN | (G) Reason | (H) Disp. |
|---|---|---|---|---|---|---|---|---|---|---|---|
| 1 | 1 | Cog.Eng. J. Harris | | 9/9/93 | H5-52 | | | | | | |
| 1 | 1 | Cog. Mgr. K. V. Scott | | 9/9/93 | H5-52 | | | | | | |
| 1 | 1 | QA R. Malhan | | 9/14/93 | S1-57 | | | | | | |
| 1 | 1 | D. L. Powell | | 9/14/93 | L4-32 | | | | | | |
| 1 | 1 | F. R. Vollert | | 9/20/93 | H5-09 | | | | | | |
| 1 | 1 | E. J. Walter | | Aug. 30, 1993 | H5-52 | | | | | | |
| 1 | 1 | M. E. Rutkes | | 9/14/93 | R1-51 | | | | | | |

| 18. | 19. | 20. | 21. DOE APPROVAL (if required) |
|---|---|---|---|
| J. Harris 9/9/93 Signature of EDT Originator Date | M. A. McLaughlin 9/20/93 Authorized Representative for Receiving Organization Date | K. V. Scott 9/17/93 Cognizant/Project Engineer's Manager Date | Ltr. No. [] Approved [] Approved w/comments [] Disapproved w/comments |

BD-7400-172-2 (07/89) (EF) GEF097

BD-7400-172-1 (07/91)

# SUPPORTING DOCUMENT

1. Total Pages 42

| 2. Title | 3. Number | 4. Rev No. |
|---|---|---|
| VISUAL EXAMINATION REPORT FOR TANK ANNULI AT THE 241-SY TANK FARM | WHC-SD-WM-RPT-076 | 0 |

5. Key Words

Double-Shell Tank Examination, CCTV, WAC, Video Inspection System, Annulus Examination, Tank Integrity Assessment

6. Author

Name: J. Harris

Signature

Organization/Charge Code 23460/N13AB


7. Abstract

This document records the results of the examination of the annuli of the double-shell tanks at the 241-SY Tank Farm. This examination supports the "not unfit for use" assessment of the tanks in accordance with the Washington Administrative Code 173-303-640(2).


APPROVED FOR PUBLIC RELEASE
9/22/93 N. Adler


8. PURPOSE AND USE OF DOCUMENT - This document was prepared for use within the U.S. Department of Energy and its contractors. It is to be used only to perform, direct, or integrate work under U.S. Department of Energy contracts. This document is not approved for public release until reviewed.

PATENT STATUS - This document copy, since it is transmitted in advance of patent clearance, is made available in confidence solely for use in performance of work under contracts with the U.S. Department of Energy. This document is not to be published nor its contents otherwise disseminated or used for purposes other than specified above before patent approval for such release or use has been secured, upon request, from the Patent Counsel, U.S. Department of Energy Field Office, Richland, WA.

DISCLAIMER - This report was prepared as an account of work sponsored by an agency of the United States Government. Neither the United States Government nor any agency thereof, nor any of their employees, nor any of their contractors, subcontractors or their employees, makes any warranty, express or implied, or assumes any legal liability or responsibility for the accuracy, completeness, or any third party's use or the results of such use of any information, apparatus, product, or process disclosed, or represents that its use would not infringe privately owned rights. Reference herein to any specific commercial product, process, or service by trade name, trademark, manufacturer, or otherwise, does not necessarily constitute or imply its endorsement, recommendation, or favoring by the United States Government or any agency thereof or its contractors or subcontractors. The views and opinions of authors expressed herein do not necessarily state or reflect those of the United States Government or any agency thereof.


9. Impact Level A 3Q

10. RELEASE STAMP

OFFICIAL RELEASE BY WHC
DATE SEP 22 1993
Sta. 21


9413147.0168

WHC-SD-WM-RPT-076
REV. 0

# VISUAL EXAMINATION REPORT FOR TANK ANNULI AT THE 241-SY TANK FARM

AUGUST 1993

9413147.0169

Prepared By: _____ 9/9/93
J. Harris, Principal Engineer — Date
System Structural Integrity Assessments

Examination Engineer: _____ 9/14/93
D. L. Powell Jr., Engineering Technician — Date
Equipment Testing Laboratory

Reviewed By: _____ 9/9/93
E. J. Walter — Date
System Structural Integrity Assessments

Approved By: _____ 9/9/93
K. V. Scott, Manager — Date
System Structural Integrity Assessments

WESTINGHOUSE HANFORD COMPANY
For The
U.S. Department of Energy
Richland Field Office

## CONTENTS

PAGE

1.0 INTRODUCTION . . . . . 1

2.0 OBJECTIVE . . . . . 1

3.0 SCOPE . . . . . 2

4.0 CCTV EXAMINATION EQUIPMENT AND PROCEDURES . . . . . 3

5.0 GENERAL OBSERVATIONS . . . . . 6

6.0 CONCLUSIONS AND RECOMMENDATIONS . . . . . 7
6.1 CONCLUSIONS . . . . . 7
6.2 RECOMMENDATIONS . . . . . 8

7.0 REFERENCES . . . . . 9

ATTACHMENT 1 - Verification Check Sheets . . . . . A1-1

ATTACHMENT 2 - Photograph, Annulus, Tank 241-SY-101 . . . . . A2-1

ATTACHMENT 3 - Examination Photographs . . . . . A3-1

ATTACHMENT 4 - Video Review Record - Double-Shell Tank Annulus 241-SY Tanks . . . . . A4-1

## FIGURES

FIGURE 1 - Typical Arrangement for Annulus Examination of the Double-Shell Tanks . . . . . 5

9413147.0170

# VISUAL EXAMINATION REPORT FOR TANK ANNULI AT THE 241-SY TANK FARM

## 1.0 INTRODUCTION

The Washington State Department of Ecology's *Dangerous Waste Regulations*, Washington Administrative Code (WAC) 173-303-640(2) (a) has provisions for integrity assessments of tank systems. This section of the WAC states:

> "For each existing tank system, the owner or operator must determine that the tank system is not leaking or is unfit for use."

Additionally the WAC states that the written assessment, to be kept on file at the facility, will be reviewed and certified by an independent, qualified registered professional engineer, in accordance with WAC 173-303-810-(13)(a). These regulations are applicable to the hazardous portion of wastes stored in the various facilities of the Tank Farm Project.

The *Tank Farm Project Tank Integrity Assessment Program Plan*, WHC-SD-WM-AP-017, Rev. 0, identifies the tasks to be performed during the assessment of the existing tank system which are regulated by the WAC. The Tank Farm Project Tank Integrity Assessment Program Plan describes the components to be assessed and the examinations, tests, analysis, data management and reporting requirements.

Closed circuit television (CCTV) examination of select areas of the annulus of the tanks was performed and the results of the examinations have been reviewed as required by the integrity assessment program plan. The findings of those reviews are contained in this report. This report satisfies the visual examination requirements of the Tank Farm Project Tank Integrity Assessment Program Plan.

## 2.0 OBJECTIVE

The objective of the program plan is to determine if the tank system is "not leaking" or is "unfit for use", in order to satisfy the WAC requirements.

The program plan requires this examination to assess the degradation and corrosion of the primary and secondary shells, to provide a record of surface conditions as a baseline for subsequent examinations, to identify the present state of corrosion of the primary and secondary shell walls in the annulus, and to survey the annulus for surface conditions and hardware that could restrict or obstruct access for the performance of other non-destructive examinations.

9413147.0171

Further, this type of examination is able and intended to detect visible cracks, potential leak sites, and other physical impairments. This report in accordance with the objective of the program plan, documents how the examination was conducted, the observations and the conclusions.

## 3.0 SCOPE

The visual examinations were conducted in two phases.

9413147.0172

**PHASE I**

A CCTV camera was lowered via two 4-in. pipe dome risers approximately 180° apart in each of the three 241-SY double shell tanks (DST); see Table 1, thereby providing access to the tank annulus.

The visible surfaces of the primary and secondary steel tanks and the insulating concrete were examined by an examination engineer, and all images were recorded on video tape. Verification check sheets were completed during the CCTV examinations by the examination engineer to provide an examination record. See Attachment 1.

**PHASE II**

A review of the video tape was performed after completion of the initial examination of the three tanks in the farm. Review observation records for the CCTV video tapes have been completed (see Attachment 4) for the annuli listed below:

241-SY-101, riser 18D and 18J
241-SY-102, riser 18C and 18H
241-SY-103, riser 18B and 18G

9413147.0173

TABLE 1

LIST OF 241-SY TANK ANNULUS EXAMINATION TAPES
(All tapes reviewed by J. Harris)

| Exam Tape # | Exam Access Riser* | Exam Date | Exam Depth Range (in.) | Date Reviewed |
|---|---|---|---|---|
| 1A | 241-SY-102-18H | 11/24/92 | 300-588 | 02/02/93 |
| 1B | 241-SY-102-18H | 11/25/92 | 588-635 | 02/11/93 |
| 2 | 241-SY-102-18C | 11/30/92 | 300-636 | 01/28/93 |
| 3 | 241-SY-101-18J | 12/02/92 | 300-636 | 01/25/93 |
| 4A | 241-SY-101-18D | 12/02/92 | 300-636 | 01/26/93 |
| 4B | 241-SY-101-18D-3 and 9B-3,4 | 12/30/92 | 396-492 | 01/26/93 |
| 5 | 241-SY-103-18G | 12/03/92 | 300-636 | 02/11/93 |
| 6 | 241-SY-103-18B | 12/04/92 | 300-636 | 02/01/93 |

*Reference SD-RE-TI-093, *Double-Shell Underground Waste Storage Tanks, Riser Survey.*

## 4.0 CCTV EXAMINATION EQUIPMENT AND PROCEDURES

The *Acceptance Test Report for Double-Shell Tank Inspections*, WHC-SD-WM-ATR-018, (WHC 1992) demonstrates the acceptability of the CCTV examination system. The acceptance test report provides the following description of the equipment and activities for DST inspections. The examination system consists of a remotely operated video camera suspended on aluminum rods. The tilt capability of the camera is 65° up and 90° down from the horizontal plane. The horizontal pan range is approximately 340°. The camera is equipped with lights of variable intensity. The camera is qualified to examine from a distance of 20 ft. (6.09m) at which resolution is equivalent to that attainable by direct visual examination. Direct visual examination is equivalent to resolving a 1/32 in. (0.079-cm) line on an 18 percent neutral gray card at a distance of 24 in.(60.0-cm). This standard is taken from the *Rules for In-Service Inspection of Nuclear Power Plant Components*, Section XI, ASME Boiler and Pressure Vessel Code (ASME 1989).

Electronic position encoders were used to provide real-time digital position reference of the CCTV images in the annulus. The view of the examination camera

was monitored by the examination engineer during the examination. The focus, zoom, lighting, and speed of the camera were adjusted to provide the optimum viewing with the equipment available. If a suspected discrepancy appeared, every effort was made to obtain a clear image for review and record. Additional detail regarding the equipment used and the inspection procedure is available in *CCTV Examination Operating Procedure for the Double Shell Tanks*, WHC-SD-WM-TCP-003, Rev. 0 (WHC 1991).

The camera was lowered through the designated risers into the annulus. The examination began with the camera lowered approximately 25 feet (7.6m) below the top of the riser and continued in 4-foot (1.2m) increments to a depth where the bottom knuckle of the primary-shell could be viewed. A nearly complete vertical strip of the surface of the primary and secondary-shell was examined from the 25 foot (7.6m) depth to and including the secondary-shell bottom of the annulus.

The various risers used for access into the annuli may be located at different radii. When a riser is located closer to the outer wall, the actual degree of rotation the camera can achieve without hitting the secondary shell is reduced. The actual amount of camera rotation is shown on the video review records in Attachment 4.

Approximately 18 percent of the primary-shell surface and 30 percent of the secondary-shell surface were examined in each tank. Figure 1 depicts the viewing position of and the typical area covered by the camera in the annulus. The primary-shell surface coverage is limited by the curvature of the tank. The secondary-shell surface coverage is limited by the range of the camera, which is 20 feet (6.09m).

The radiation rates were measured at different depths in each tank annulus A calibrated R07 probe was used. The maximum gamma radiation exposure rates in roentgens per hour (R/hr) encountered by the equipment in the 241-SY tank farm annuli are listed as follows:

241-SY-101 - 33.0
241-SY-102 - 3.6
241-SY-103 - 49.0.

9413147.0174

9413147.0175

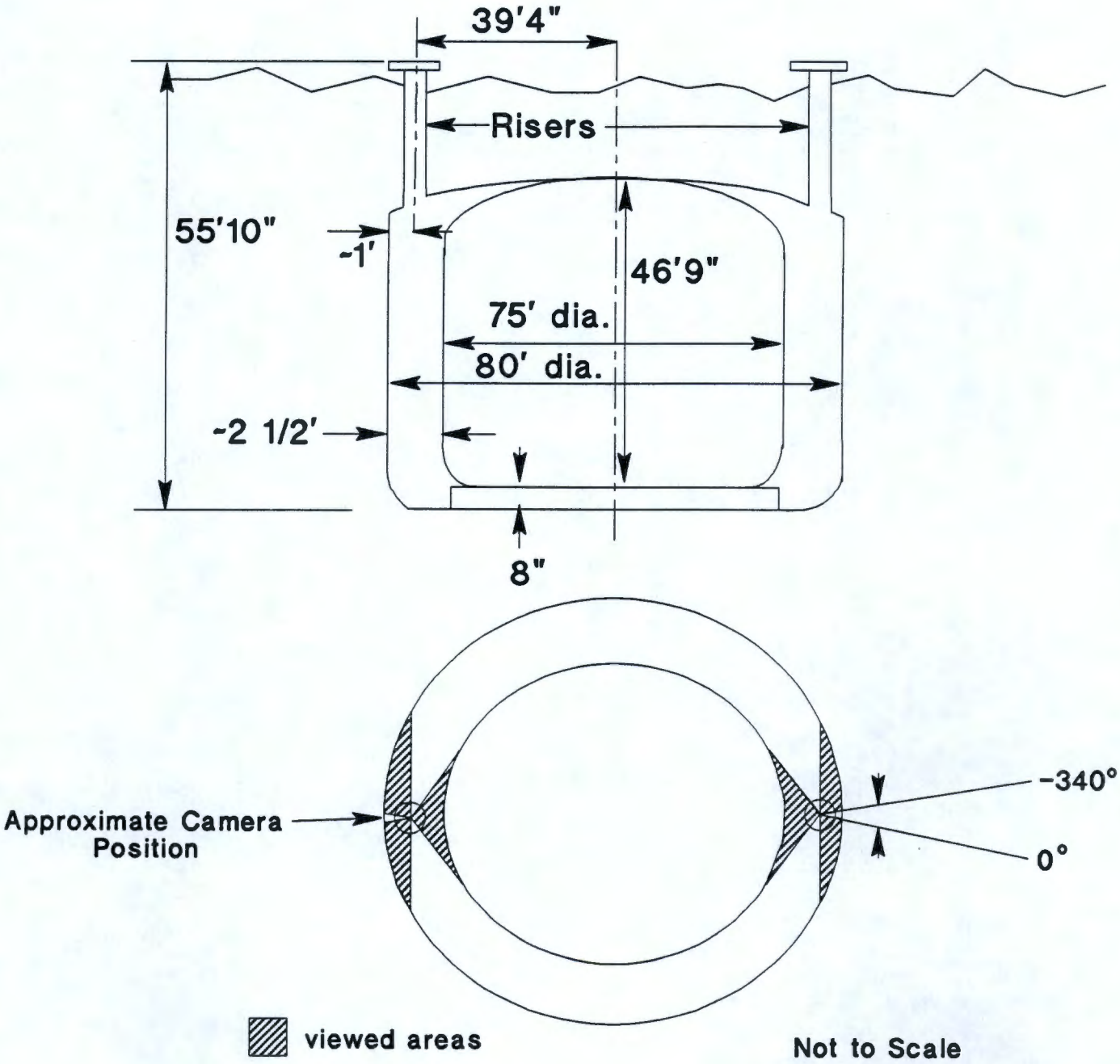


FIGURE 1. Typical Arrangement for Annulus Examination of the Double-Shell Tanks.

9413147.0176

## 5.0 GENERAL OBSERVATIONS

As previously noted, the video examination of the primary tank and secondary liner wall and the insulating concrete surfaces was accomplished using a closed circuit television (CCTV). As the examination occurred, the image was viewed on a monitor by the examination engineer at the site and recorded on a video cassette tape. Areas with indications of suspected material degradation were revisited until the examination was considered adequate.

The photograph in Attachment 2 provides a reference view of the condition of the surface of the 241-SY-101 primary shell taken after construction and before the tank was placed in service. The surface condition has not significantly changed.

The 241-SY video tapes listed in Table 1, were viewed by a certified second party examiner, through the System Structural Integrity Assessment group, to provide recorded, independent review observations (Attachment 4).

During review of tape 4A an indication was observed. As a result tape 4B was made to get a better view of the indication from a closer, more direct angle. The indication was determined to be not significant.

Rust does exist over many areas of the tank shell surfaces, however the degradation of the tanks is considered minimal. The accumulation of rust was generally greater at the welds and the adjacent heat affected zone than at other areas. The degree of rust varies from tank to tank, but more markedly between the primary and secondary-shells. Without exception, the progress of rust on the secondary-shell exceeds the progress of rust on the primary-shell.

In several areas on both primary and secondary-shell surfaces, condensation appears to have existed. Also on the secondary-shell in the haunch area there are several circular water lines with accompanying rust residue. It is believed that this rust was caused when the haunch subassemblies were inverted before assembly, and were allowed to collect rainwater and condensation (dew).

Attachment 4 describes areas of corrosion, markings and blemishes that were observed and cannot be accounted for. None are thought to reflect significant degradation of the tank integrity. Several areas of the castable refractory concrete were noted as being upset, cracked, or otherwise degraded.

There is evidence of liquid draining down the primary tank and secondary shells during at least two separate intervals. The evidence of the earlier draining is the corrosion pattern, especially on the secondary liner wall. The corrosion covers a large portion of the surface with some panels showing more corrosion residue than others and there are islands where the mill scale remains. Evidence of the second draining is a whitish residue which streaks down both shells, originating in the haunch region. This whitish residue, which generally

overlays the rust residue or mill scale, does not appear to have initiated or accelerated the corrosion process.

Attachment 3 contains photographs taken from the video tapes which depict conditions observed. Photograph A3-2 is a view of the castable refractory concrete showing the cracked, spalled, upset condition in the area extending from the primary shell tank knuckle to the refractory retaining ring. The surface of the refractory is severely degraded. Photograph A3-3 shows what appears to be multiple pores on the primary tank wall.

The 20 degree azimuth rotation of the camera when in the near horizontal position and viewing the primary shell wall straight on, often times allows an area of the tank wall to be missed from viewing.

9413147.0177

## 6.0 CONCLUSIONS AND RECOMMENDATIONS

### 6.1 CONCLUSIONS

This visual examination found no indications of primary steel shell tank leakage.

Further, this examination did not detect evidence of visible cracks, potential leak sites, or other physical impairments to the tank shells.

The apparent porosity viewed on the primary shell tank wall of SY 102 through riser 18H, does not include evidence of surface corrosion. The depth of these indications cannot be determined by remote visual examination. During future visual inspections, these indications can be explored for changes by comparison of video tape records.

The damaged refractory which is visible in the SY tank farm does not seem to have any detrimental affect on the integrity of the tanks. No primary shell settlements were observed. If this condition exists under the primary shell bottom plate not visible by this examination, there may be enough debris to partially obstruct the annulus ventilation system air flow.

9413147.0178

## 6.2 RECOMMENDATIONS

1. A Kodak[1] color bar inside the annulus would be useful for establishing a more accurate color comparison.

2. The humidity in the annulus should be maintained at 70 percent or less to reduce the potential for corrosion or rust. See *Metals Handbook* (1987, p.511) and *Shreir* (1963, p.2.11) for the effect of atmospheric factors on corrosion. Precautions should be taken to keep water out of the annulus.

3. A comparison examination of these same tank areas should be included in the subsequent periodic integrity assessments examinations of these tanks.

4. Long term plans should evaluate the need to perform future additional visual examinations through other risers. If future examinations are only to coincide with this examination, it is recommended that the examination frequency be ten years minimum.

5. The examination engineer should keep a running log of azimuth and elevation during the recording process of future visual examination.

6. The tilt range of the camera in the very high and low extremes presently captures the same area of view approximately 4 times in the course of the examination. The tilt range should be reduced to minimize this redundancy.

---

[1]Kodak is a registered trademark of the Eastman Kodak Company.

## 7.0 REFERENCES

Anderson, A. A., 1992, *Double-Shell Underground Waste Storage Tanks, Riser Survey*, SD-RE-TI-093, Westinghouse Hanford Company, Richland, Washington.

Ecology, 1990, "Dangerous Waste Regulations," *Washington Administrative Code* Chapter 173-303-640(2), as amended, Washington State Department of Ecology, Olympia, Washington.

Eacker, J. A., 1991, *Tank Farm Project Tank Integrity*, WHC-SD-WM-AP-017, Rev. 0, Westinghouse Hanford Company, Richland, Washington.

Sumsion, M. L., 1992, *The Acceptance Test Report for Double-Shell Tank Inspections*, WHC-SD-WM-ATR-018, Westinghouse Hanford Company, Richland, Washington.

ASME, *Rules for In-Service Inspection of Nuclear Power Plant Components, Section XI, 1989*, American Society of Mechanical Engineers Boiler and Pressure Vessel Code, American Society of Mechanical Engineers, New York, New York.

Sumsion, M. L., 1991, *CCTV Examination Operating Procedure for the Double Shell Tanks*, WHC-SD-TCP-003, Rev. 0, Westinghouse Hanford Company, Richland, Washington.

Metals Handbook, 1987, Corrosion, Ninth Edition, Volume 13, ASM International, Metals Park, Ohio.

Shreir, L. L., 1963, Corrosion, Volume 1, John Wiley & Sons, New York, New York.

9413147.0179

# ATTACHMENT 1

## Verification Check Sheets

9413147.0180

SY



| TANK # | LOC. I.D. | VIDEO RESOLUTION CHECK IF O.K. | COMMENTS | VERIFIED BY | DATE/ TIME |
|---|---|---|---|---|---|
| 102 SY | 18-H | ✓ | on attachment #2 | RD | 11/25/92 |
| 102 SY | 18 C | ✓ | Looks Good | RD | 11/30/92 |
| 101 SY | 18 J | ✓ | Looks Good | RD | 12/1/92 |
| 101 SY | 18 D | ✓ | on attachment #2 | RD | 12/2/92 |
| 103 SY | 18 G | ✓ | Looks Good | RD | 12/3/92 |
| 103 SY | 18 B | ✓ | Looks Good | RD | 12/4/92 |

9413147.0181

9413147.0182

## AREAS OF INTEREST EXAMINATION VERIFICATION CHECK SHEET

| INITIAL/DATE/TIME | TANK # | RISER I.D. | VIDEO TAPE I.D. # |
|---|---|---|---|
| | SY 102 | 18-H | SY-1-B SY-1-A |
| Completed RP 11/25/92 3:00 | OUTSIDE WALL OF THE PRIMARY TANK | | |
| Completed RP 11/25/92 3:00 | INSIDE WALL OF THE SECONDARY TANK | | |
| Completed RP 11/25/92 3:00 | PRIMARY TANK UPPER/LOWER KNUCKLE AREA | | |
| Completed RP 11/25/92 3:00 | SECONDARY UPPER/LOWER KNUCKLE AREA | | |
| Completed RP 11/25/92 3:00 | CONCRETE EDGE BELOW THE PRIMARY TANK | | |
| Completed RP 11/25/92 3:00 | ALL WELDS | | |
| Completed RP 11/25/92 3:00 | ANNULUS FLOOR | | |
| Completed RP 11/25/92 3:00 | EXIT OPENING OF THE SLOTS IN THE INSULATING CONCRETE UNDER THE PRIMARY TANK | | |
| Comments | Rough area @ 140 Az / +20 Ht / 348 Depth (Looks pitted) | | |

9413147.0183

## AREAS OF INTEREST EXAMINATION VERIFICATION CHECK SHEET

| INITIAL/DATE/TIME | TANK # SY 102 | RISER I.D. 18-C | VIDEO TAPE I.D. # SY-2 |
|---|---|---|---|
| Completed DD 11/30/92 2:30 | OUTSIDE WALL OF THE PRIMARY TANK | | |
| Completed DD 11/30/92 2:30 | INSIDE WALL OF THE SECONDARY TANK | | |
| Completed DD 11/30/92 2:30 | PRIMARY TANK UPPER/LOWER KNUCKLE AREA | | |
| Completed DD 11/30/92 2:30 | SECONDARY UPPER/LOWER KNUCKLE AREA | | |
| Completed DD 11/30/92 2:30 | CONCRETE EDGE BELOW THE PRIMARY TANK | | |
| Completed DD 11/30/92 2:30 | ALL WELDS | | |
| Completed DD 11/30/92 2:30 | ANNULUS FLOOR | | |
| Completed DD 11/30/92 2:30 | EXIT OPENING OF THE SLOTS IN THE INSULATING CONCRETE UNDER THE PRIMARY TANK | | |
| | | | |

9413147.0184

## AREAS OF INTEREST EXAMINATION VERIFICATION CHECK SHEET

| INITIAL/DATE/TIME | TANK # SY 101 | RISER I.D. 18J | VIDEO TAPE I.D. # SY-3 |
|---|---|---|---|
| Completed RD 12/1/92 12:00 | OUTSIDE WALL OF THE PRIMARY TANK | | |
| Completed RD 12/1/92 12:00 | INSIDE WALL OF THE SECONDARY TANK | | |
| Completed RD 12/1/92 12:00 | PRIMARY TANK UPPER/LOWER KNUCKLE AREA | | |
| Completed RD 12/1/92 12:00 | SECONDARY UPPER/LOWER KNUCKLE AREA | | |
| Completed RD 12/1/92 12:00 | CONCRETE EDGE BELOW THE PRIMARY TANK | | |
| Completed RD 12/1/92 12:00 | ALL WELDS | | |
| Completed RD 12/1/92 12:00 | ANNULUS FLOOR | | |
| Completed RD 12/1/92 12:00 | EXIT OPENING OF THE SLOTS IN THE INSULATING CONCRETE UNDER THE PRIMARY TANK | | |
| | | | |

9413147.0185

AREAS OF INTEREST EXAMINATION VERIFICATION CHECK SHEET

| INITIAL/DATE/TIME | TANK # | RISER I.D. | VIDEO TAPE I.D. # |
|---|---|---|---|
| | 101 SY | 18-D | SY-4 |
| Completed DD 12/2/92 12:00 | OUTSIDE WALL OF THE PRIMARY TANK | | |
| Completed DD 12/2/92 12:00 | INSIDE WALL OF THE SECONDARY TANK | | |
| Completed DD 12/2/92 12:00 | PRIMARY TANK UPPER/LOWER KNUCKLE AREA | | |
| Completed DD 12/2/92 12:00 | SECONDARY UPPER/LOWER KNUCKLE AREA | | |
| Completed DD 12/2/92 12:00 | CONCRETE EDGE BELOW THE PRIMARY TANK | | |
| Completed DD 12/2/92 12:00 | ALL WELDS | | |
| Completed DD 12/2/92 12:00 | ANNULUS FLOOR | | |
| Completed DD 12/2/92 12:00 | EXIT OPENING OF THE SLOTS IN THE INSULATING CONCRETE UNDER THE PRIMARY TANK | | |
| Comments #1 | Tilt 8/Az-200/Depth 396/there is a spot that appears as though it has body or height. | | |

9413147.0186

## AREAS OF INTEREST EXAMINATION VERIFICATION CHECK SHEET

| INITIAL/DATE/TIME | TANK # SY 103 | RISER I.D. 18-G | VIDEO TAPE I.D. # SY-5 |
|---|---|---|---|
| Completed DD 12/3/92/2:30 | OUTSIDE WALL OF THE PRIMARY TANK | | |
| Completed DD 12/3/92/2:30 | INSIDE WALL OF THE SECONDARY TANK | | |
| Completed DD 12/3/92/2:30 | PRIMARY TANK UPPER/LOWER KNUCKLE AREA | | |
| Completed DD 12/3/92/2:30 | SECONDARY UPPER/LOWER KNUCKLE AREA | | |
| Completed DD 12/3/92/2:30 | CONCRETE EDGE BELOW THE PRIMARY TANK | | |
| Completed DD 12/3/92/2:30 | ALL WELDS | | |
| Completed DD 12/3/92/2:30 | ANNULUS FLOOR | | |
| Completed DD 12/3/92/2:30 | EXIT OPENING OF THE SLOTS IN THE INSULATING CONCRETE UNDER THE PRIMARY TANK | | |
| | | | |

9413147.0187

## AREAS OF INTEREST EXAMINATION VERIFICATION CHECK SHEET

| INITIAL/DATE/TIME | TANK # | RISER I.D. * | VIDEO TAPE I.D. # |
|---|---|---|---|
| | SY 103 | 18-~~D~~ B | SY-6 |
| Completed 12/3/92 12:00 | OUTSIDE WALL OF THE PRIMARY TANK | | |
| Completed 12/3/92 12:00 | INSIDE WALL OF THE SECONDARY TANK | | |
| Completed 12/3/92 12:00 | PRIMARY TANK UPPER/LOWER KNUCKLE AREA | | |
| Completed 12/3/92 12:00 | SECONDARY UPPER/LOWER KNUCKLE AREA | | |
| Completed 12/3/92 12:00 | CONCRETE EDGE BELOW THE PRIMARY TANK | | |
| Completed 12/3/92 12:00 | ALL WELDS | | |
| Completed 12/3/92 12:00 | ANNULUS FLOOR | | |
| Completed 12/3/92 12:00 | EXIT OPENING OF THE SLOTS IN THE INSULATING CONCRETE UNDER THE PRIMARY TANK | | |
| | | | |

* Reference Pgs 2, 3, A1-2, & A4-16 DP 9/14/93.

ATTACHMENT 2

Photograph, Annulus, Tank 241-SY-101

9413147.0188

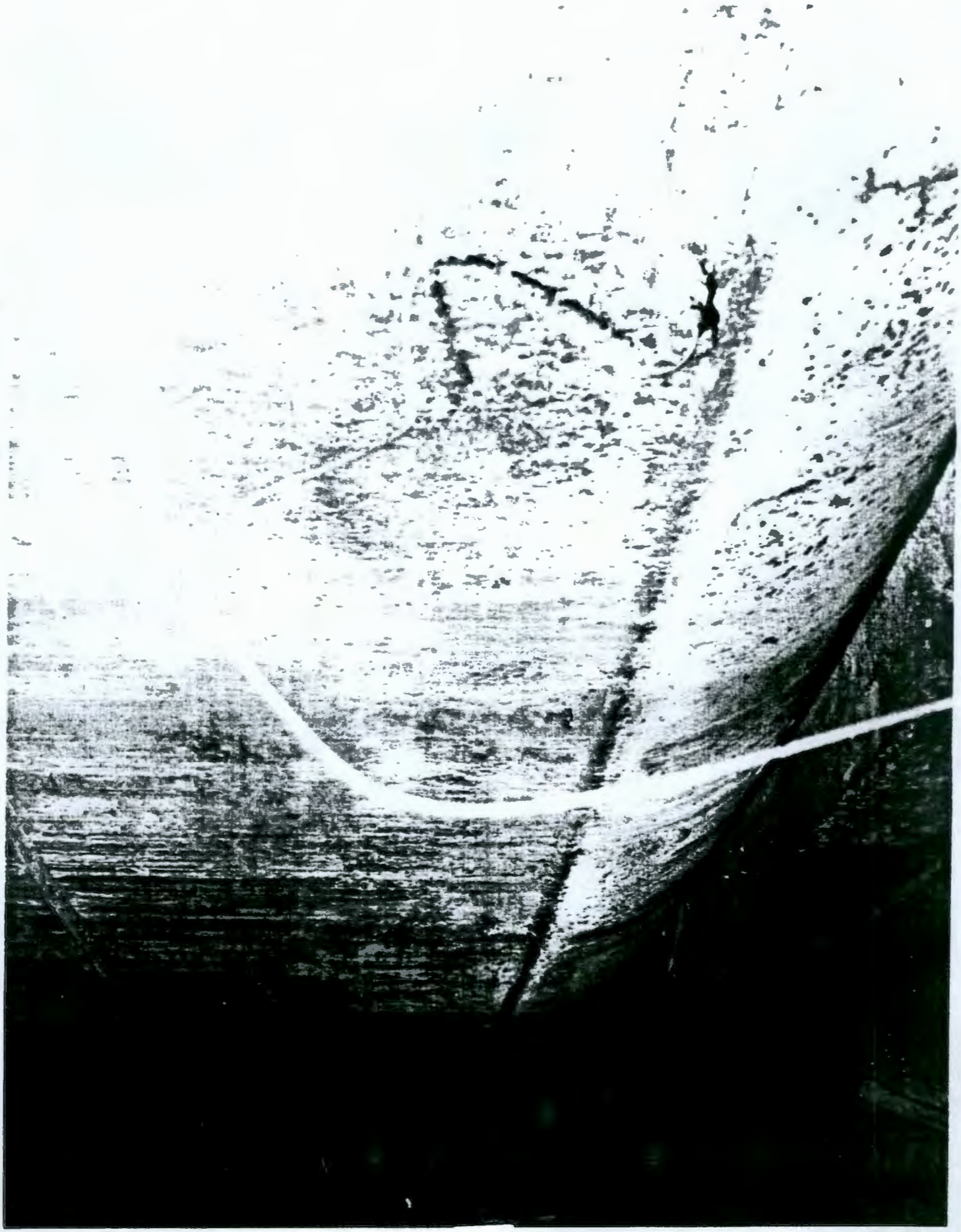

9413147.0189

# ATTACHMENT 3

## Examination Photographs

9413147.0190

241-SY-101-18J
TILT -20
AZMTH -128
DEPTH 636

11/24/92 10/52/08
241-SY-102
TILT -41 DEG
AZMTH -80 DEG
DEPTH 300 INCH

# ATTACHMENT 4

## Video Review Record - Double-Shell Tank Annulus
## 241-SY Tanks

9413147.0193

# Video Review Record - Double-Shell Tank Annulus

Review Date: 02/02/93

Tank Number: 241-SY-102-18H  Inspection Date: 11/24/92  Tape Number: #1A

Reviewer: J. Harris (Print/Signature)

| Tape Time | | VCR | Complementary Information | | | Reviewer Comments |
|---|---|---|---|---|---|---|
| Hr | Min | Time (Min-Sec) | Azim. (Deg.) | Depth (in.) | Tilt (Deg.) | |
| No Clock | | | | | | Start |
| 10 | 44 | 55 | -20 | 300 | -75 | |
| 10 | 52 | 06 | -80 | 300 | -42 | Black spots - pore like or pin hole |
| 10 | 54 | 27 | -100 | 300 | 35 | More pores |
| 10 | 55 | 49 | -100 | 300 | -53 | More pores |
| 10 | 56 | 38 | -120 | 300 | -74 | Thermocouple inclined linear scab indication |
| 10 | 56 | 57 | -120 | 300 | -37 | Weld spatter |
| 11 | 00 | 25 | -160 | 300 | -45 | Pores |
| 11 | 05 | 01 | -220 | 300 | | End |
| 13 | 26 | 28 | -20 | 348 | 85 | Start |
| 13 | 38 | 05 | -138 | 348 | 29 | Indication - round rod protruding from wall (thermocouple) |
| 13 | 44 | 28 | -213 | 348 | 82 | Construction fixture left attached to backing bar |
| 13 | 48 | 46 | -240 | 348 | | End |
| 13 | 50 | 50 | -21 | 396 | -89 | Start |
| 13 | 55 | 11 | -57 | 396 | -75 | Stain spot on floor of annulus |
| 14 | 10 | 14 | -240 | 396 | | End |

# Video Review Record - Double-Shell Tank Annulus

Review Date: 02/02/93

Tank Number: 241-SY-102-18H  Inspection Date: 11/24/92  Tape Number: #1A

Reviewer: J. Harris/ [signature] (Print/Signature)

| Tape Time | | VCR | Complementary Information | | | Reviewer Comments |
|---|---|---|---|---|---|---|
| Hr | Min | Time (Min-Sec) | Azim. (Deg.) | Depth (in.) | Tilt (Deg.) | |
| 14 | 12 | 44 | -20 | 444 | -89 | Start |
| 14 | 28 | 26 | -240 | 444 | | End |
| 14 | 33 | 37 | -20 | 492 | -88 | Start - false start 492" missing |
| 09 | 31 | 03 | -20 | 540 | -89 | Start 11/25/92 |
| 09 | 32 | 35 | -20 | 540 | -20 | Outer wall - horizontal weld ground flat |
| 09 | 48 | 33 | -240 | 540 | | End |
| 09 | 52 | 15 | -20 | 588 | -89 | Start |
| 10 | 02 | 14 | 140 | 588 | | End |

# Video Review Record - Double-Shell Tank Annulus

Review Date: 02/11/93

Tank Number: 241-SY-102-18H Sweep  Inspection Date: 11/25/92  Tape Number: #1B

Reviewer: J. Harris/ [signature] (Print/Signature)

| Tape Time | | VCR | Complementary Information | | | Reviewer Comments |
|---|---|---|---|---|---|---|
| Hr | Min | Time (Min-Sec) | Azim. (Deg.) | Depth (in.) | Tilt (Deg.) | |
| 10 | 08 | 22 | -200 | 588 | 70 | Start |
| 10 | 13 | 18 | -240 | 588 | | End |
| No Clock | | | -3 | 635 | 12 | Start |
| 10 | 24 | 52 | -43 | 635 | -5 | Clock start |
| 10 | 27 | 42 | -181 | 635 | -14 | Air passage way is not cut in steel ring |
| 10 | 30 | 50 | | 635 | | End |

# Video Review Record - Double-Shell Tank Annulus

Review Date: 01/28/93

Tank Number: 241-SY-102-18C  Inspection Date: 11/30/92  Tape Number: #2

Reviewer: J. Harris/ [signature] (Print/Signature)

| Tape Time | | VCR | Complementary Information | | | Reviewer Comments |
|---|---|---|---|---|---|---|
| Hr | Min | Time (Min-Sec) | Azim. (Deg.) | Depth (in.) | Tilt (Deg.) | |
| 10 | 9 | 00 | 0 | 300 | -85 | Start |
| 10 | 10 | 32 | -20 | 300 | 64 | Erection clip left in place -outer wall |
| 10 | 13 | 30 | -50 | 300 | 56 | Inner wall-debri deposits built up at 2 places |
| 10 | 14 | 50 | -81 | 300 | 38 | Inner wall-heavy streaming residual, white |
| 10 | 23 | 18 | -200 | 300 | 69 | Outer wall - temp fixture left attached |
| 10 | 27 | 00 | -240 | 300 | | End |
| 10 | 30 | 16 | 0 | 348 | -88 | Start |
| 10 | 36 | 16 | -100 | 348 | -60 | The wire mesh pattern of the insulation blankets can be seen |
| 10 | 37 | 35 | -120 | 348 | 10 | The wire mesh pattern of the insulation blankets can be seen |
| 10 | 44 | 17 | -240 | 348 | | End |
| 10 | 50 | 12 | -21 | 396 | -89 | Start |
| 10 | 53 | 38 | -80 | 396 | -14 | Example of missed wall area from viewing |
| 10 | 54 | 21 | -100 | 396 | -13 | Example of missed wall area from viewing |
| 10 | 54 | 32 | -100 | 396 | 27 | Horizontal weld inner wall |
| 11 | 00 | 50 | -240 | 396 | | End |
| 13 | 05 | 19 | -10 | 444 | -85 | Start |

# Video Review Record - Double-Shell Tank Annulus

Review Date: 01/28/93

Tank Number: 241-SY-102-18C  Inspection Date: 11/30/92  Tape Number: #2

Reviewer: J. Harris/ (Print/Signature)

| Tape Time | | VCR | Complementary Information | | | Reviewer Comments |
|---|---|---|---|---|---|---|
| Hr | Min | Time (Min-Sec) | Azim. (Deg.) | Depth (in.) | Tilt (Deg.) | |
| 13 | 19 | 19 | -240 | 444 | | End |
| 13 | 24 | 38 | 0 | 492 | -89 | Start |
| 13 | 37 | 01 | -240 | 492 | | End |
| 13 | 40 | 08 | -23 | 540 | -90 | Start |
| 13 | 44 | 06 | -80 | 540 | -65 | Heavy scale |
| 13 | 49 | 50 | -220 | 540 | -15 | Outer wall - backing strip |
| 13 | 51 | 11 | -240 | 540 | | End |
| 13 | 54 | 12 | -1 | 588 | -88 | Start |
| 14 | 04 | 07 | -240 | 588 | -3 | Outer wall - possible arc strike |
| 14 | 04 | 37 | -240 | 588 | | End |
| 14 | 09 | 48 | -8 | 636 | 2 | Start |
| 14 | 15 | 14 | | 636 | | End |

# Video Review Record - Double-Shell Tank Annulus

Review Date: 01/26/93

Tank Number: 241-SY-101-18J  Inspection Date: 12/02/92  Tape Number: 3

Reviewer: J. Harris (Print/Signature)

| Tape Time | | VCR | Complementary Information | | | Reviewer Comments |
|---|---|---|---|---|---|---|
| Hr | Min | Time (Min-Sec) | Azim. (Deg.) | Depth (in.) | Tilt (Deg.) | |
| 9 | 22 | | 0 | 300 | 69 | Start |
| 9 | 22 | 48 | 0 | 300 | 21 | Outer wall - elongated indications near circum. weld |
| 9 | 26 | 55 | -40 | 300 | 5 | Mill scale remaining after PWHT |
| 9 | 29 | 36 | -80 | 300 | 72 | Residue (blue) surrounding weld at "130" mark |
| 9 | 34 | 43 | -160 | 300 | 73 | Outer wall - tapered pin alignment tools left in place |
| 9 | 35 | 22 | -169 | 300 | 71 | Zoom in - backing strip clearly visible (vertical) |
| 9 | 35 | 59 | -170 | 300 | 53 | Penetration through outer wall dross/slag showing |
| 9 | 36 | 26 | -159 | 300 | 60 | Thermocouple? |
| 9 | 39 | 38 | -201 | 300 | 77 | Horizontal backing strip on outer wall |
| 9 | 43 | 58 | -200 | 300 | | Stop |
| 9 | 43 | 58 | 0 | 348 | -88 | Start |
| 9 | 46 | 20 | -40 | 348 | -4 | Thermocouple? |
| 9 | 50 | 16 | -100 | 348 | -67 | Inner wall - scale |
| 9 | 55 | | -210 | 348 | | Stop |
| 9 | 59 | 19 | 0 | 396 | -84 | Start |
| 9 | 59 | 24 | 0 | 396 | -69 | Outer wall - dark spots, possible depressions |

# Video Review Record - Double-Shell Tank Annulus

Review Date: 01/26/93

Tank Number: 241-SY-101-18J  Inspection Date: 12/02/92  Tape Number: 3

Reviewer: J. Harris (Print/Signature)

| Tape Time | | VCR | Complementary Information | | | Reviewer Comments |
|---|---|---|---|---|---|---|
| Hr | Min | Time (Min-Sec) | Azim. (Deg.) | Depth (in.) | Tilt (Deg.) | |
| 10 | 02 | 18 | -60 | 396 | 68 | Inner wall - remnants of thermocouple? |
| 10 | 07 | 03 | -140 | 396 | 0 | Blue chalk on weld |
| 10 | 10 | 58 | -190 | 396 | | Stop |
| 10 | 13 | 46 | 0 | 444 | -72 | Start |
| 10 | 14 | 07 | 1 | 444 | -30 | Dark elongated indication outer wall |
| 10 | 15 | 43 | -20 | 444 | -46 | Something hanging from inner wall (thermocouple?) |
| 10 | 16 | 02 | -12 | 444 | -70 | Outer wall - vertical row of dark elongated spots |
| 10 | 24 | 45 | -160 | 444 | -55 | Something hanging from inner wall (thermocouple?) |
| 10 | 32 | 00 | -200 | 444 | | Stop |
| 10 | | | 0 | 492 | -84 | Start |
| 10 | 32 | 21 | 1 | 492 | -26 | Outer wall - dark elongated indications (vertical) |
| 10 | 41 | 52 | -159 | 492 | -14 | Thermocouple? |
| 10 | 44 | 37 | -200 | 492 | | End |
| 13 | 10 | 03 | 0 | 540 | -86 | Start |
| 13 | 11 | 06 | 0 | 540 | 14 | Outer wall - vertical elongated dark indications |
| 13 | 21 | 33 | -180 | 540 | -27 | Outer wall - vertical elongated dark indications |
| 13 | 22 | 27 | -179 | 540 | -75 | Bottom - can top? |

# Video Review Record - Double-Shell Tank Annulus

Review Date: 01/26/93

Tank Number: 241-SY-101-18J  Inspection Date: 12/02/92  Tape Number: 3

Reviewer: J. Harris (Print/Signature)

| Tape Time | | VCR | Complementary Information | | | Reviewer Comments |
|---|---|---|---|---|---|---|
| Hr | Min | Time (Min-Sec) | Azim. (Deg.) | Depth (in.) | Tilt (Deg.) | |
| 13 | 24 | 20 | -200 | 540 | | End |
| 13 | 26 | 44 | 0 | 588 | -89 | Start |
| 13 | 39 | 47 | -210 | 588 | 60 | Unistrut welded to outer wall |
| 13 | 39 | 48 | -200 | 588 | | End |
| 13 | 46 | 58 | 0 | 636 | -5 | Start |
| 13 | 47 | 52 | -20 | 636 | -4 | Retainer ring, insulating concrete, lower knuckle |
| 13 | 49 | 55 | -161 | 636 | -21 | Thermocouple wires |
| 13 | 52 | 56 | | 636 | | End |

# Video Review Record - Double-Shell Tank Annulus

Review Date: _____

Tank Number: 241-SY-101-18D  Inspection Date: 12/02/92  Tape Number: 4A

Reviewer: J. Harris/ [signature] (Print/Signature)

| Tape Time | | VCR | Complementary Information | | | Reviewer Comments |
|---|---|---|---|---|---|---|
| Hr | Min | Time (Min-Sec) | Azim. (Deg.) | Depth (in.) | Tilt (Deg.) | |
| 09 | 06 | 36 | 0 | 300 | -87 | Start - alignment bracket left in place |
| 09 | 23 | 50 | -240 | 300 | | End |
| 09 | 29 | 04 | -20 | 348 | -88 | Start |
| 09 | 37 | 50 | -140 | 348 | -41 | Thermocouple wire attached to inner wall |
| 09 | 44 | 19 | -240 | 348 | | End |
| 09 | 48 | 16 | -15 | 396 | -66 | Start |
| 10 | 01 | 43 | -200 | 396 | 10 | Indication on inner wall - Tape 4B made to further examine area |
| 10 | 02 | 38 | -200 | 396 | 9 | White deposit, inner wall, unexplained |
| 10 | 05 | 55 | -208 | 396 | 4 | White deposit, inner wall, unexplained |
| 10 | 07 | 59 | -240 | 396 | | End |
| 10 | 11 | 21 | 3 | 444 | -88 | Start |
| 10 | 27 | 15 | -215 | 444 | | End |
| 10 | 36 | 45 | 0 | 492 | -75 | Start |
| 10 | 39 | 23 | -42 | 492 | 74 | Dark spots on outer wall |
| 10 | 50 | 52 | -200 | 492 | -6 | Thermocouple |
| 10 | 53 | 35 | -240 | 492 | | End |

# Video Review Record - Double-Shell Tank Annulus

Review Date: _____

Tank Number: 241-SY-101-18D  Inspection Date: 12/02/92  Tape Number: 4A

Reviewer: J. Harris/ _____ (Print/Signature)

| Tape Time | | VCR | Complementary Information | | | Reviewer Comments |
|---|---|---|---|---|---|---|
| Hr | Min | Time (Min-Sec) | Azim. (Deg.) | Depth (in.) | Tilt (Deg.) | |
| 12 | 55 | 46 | 0 | 540 | -81 | Start |
| 13 | 00 | 00 | -80 | 540 | -26 | Heavy scale |
| 13 | 02 | 27 | -120 | 540 | -52 | Heavy scale |
| 13 | 10 | 43 | -240 | 540 | | End |
| 13 | 13 | 35 | -20 | 588 | -88 | Start |
| 13 | 23 | 11 | -100 | 588 | 67 | Heavy scale |
| 13 | 25 | 08 | -140 | 588 | -29 | Weld joint horizontal -inner wall |
| 13 | 27 | 51 | -160 | 588 | -71 | Clip attachment |
| 13 | 32 | 32 | -200 | 588 | | End - pipe obstruction prevents further rotation |
| 13 | 38 | 00 | 0 | 636 | 18 | Start |
| 13 | 44 | 10 | | 636 | | End |

# Video Review Record - Double-Shell Tank Annulus

Review Date: 01/25/93

Tank Number: 241-SY-101-18D-3/9B3,4 Inspection Date: 12/30/92 Tape Number: 4B

Reviewer: J. Harris/ (Print/Signature)

| Tape Time | | VCR | Complementary Information | | | Reviewer Comments |
|---|---|---|---|---|---|---|
| Hr | Min | Time (Min-Sec) | Azim. (Deg.) | Depth (in.) | Tilt (Deg.) | |
| 03 | 33 | 14 | -57 | 396 | -89 | Start - Riser 18D-3 |
| 03 | 41 | 45 | | | | End |
| 04 | 48 | 56 | -206 | (396) 444 | -63 | Start |
| 04 | 50 | 15 | | 444 | | Depth readout is corrected to 444 |
| 04 | 51 | 13 | -213 | 468 | -83 | Depth corrected to 466 |
| 05 | 04 | 00 | | 468 | | End |
| 05 | 07 | 03 | 2 | 492 | -89 | Start |
| 05 | 09 | | -196 | 492 | -5 | Indication |
| 05 | 28 | 12 | | 492 | | End |
| 05 | 53 | 44 | 0 | 468 | -19 | Start - Riser 9B3,4 |
| 06 | 00 | 50 | | 468 | | End |
| 06 | 05 | 45 | -98 | 420 | 51 | Start |
| 06 | 06 | 35 | -93 | 420 | 51 | Indication |
| 06 | 12 | 15 | -107 | 420 | 17 | Indication |
| 06 | 18 | 01 | -110 | 408 | 14 | Indication |
| 06 | 18 | 56 | -109 | 396 | -11 | Indication |

# Video Review Record - Double-Shell Tank Annulus

Review Date: 01/25/93

Tank Number: 241-SY-101-18D-3/9B3,4 Inspection Date: 12/30/92 Tape Number: 4B

Reviewer: J. Harris/ _____ (Print/Signature)

| Tape Time | | VCR | Complementary Information | | | Reviewer Comments |
|---|---|---|---|---|---|---|
| Hr | Min | Time (Min-Sec) | Azim. (Deg.) | Depth (in.) | Tilt (Deg.) | |
| 06 | 19 | 49 | -109 | 384 | -29 | Indication |
| 06 | 22 | 29 | -92 | 384 | -33 | Indication |
| 06 | 28 | 23 | -114 | 372 | -48 | Indication |
| 06 | 45 | 07 | | 372 | | End |

# Video Review Record - Double-Shell Tank Annulus

Review Date: 02/11/93

Tank Number: 241-SY-103-18G  Inspection Date: 12/03/92  Tape Number: 5

Reviewer: J. Harris/ _____ (Print/Signature)

| Tape Time | | VCR | Complementary Information | | | Reviewer Comments |
|---|---|---|---|---|---|---|
| Hr | Min | Time (Min-Sec) | Azim. (Deg.) | Depth (in.) | Tilt (Deg.) | |
| 9 | 34 | 11 | -20 | 300 | -65 | Start |
| 9 | 40 | 49 | -100 | 300 | -63 | Heavy scale |
| 9 | 49 | 21 | -220 | 300 | | End |
| 9 | 53 | 54 | -20 | 348 | -90 | Start |
| 10 | 03 | 08 | -120 | 348 | 29 | Two or more indications showing heavy corrosion products with streaming flow marks on inner wall of corrosion products |
| 10 | 07 | 33 | -180 | 348 | | End |
| 10 | 16 | 35 | -20 | 396 | -89 | Start |
| 10 | 32 | 55 | -160 | 396 | 57 | Grind out porosity note on wall vertical weld area circled may have pore |
| 10 | 33 | 04 | -160 | 396 | 29 | Pore like indications in vertical & horizontal weld |
| 10 | 37 | 40 | -220 | 396 | | End |
| 10 | 40 | 09 | -20 | 444 | -88 | Start |
| 10 | 53 | 23 | -220 | 444 | | End |
| 12 | 44 | 32 | 0 | 492 | -86 | Start |
| 12 | 59 | 29 | -220 | 492 | | End |
| 13 | 01 | 34 | 0 | 540 | -87 | Start |

# Video Review Record - Double-Shell Tank Annulus

Review Date: 02/11/93

Tank Number: 241-SY-103-18G  Inspection Date: 12/03/92  Tape Number: 5

Reviewer: J. Harris/ _____ (Print/Signature)

| Tape Time | | VCR | Complementary Information | | | Reviewer Comments |
|---|---|---|---|---|---|---|
| Hr | Min | Time (Min-Sec) | Azim. (Deg.) | Depth (in.) | Tilt (Deg.) | |
| 13 | 15 | 44 | -220 | 540 | | End |
| 13 | 18 | 11 | -0 | 588 | -88 | Start |
| 13 | 32 | 19 | -220 | 588 | | End |
| 13 | 39 | 42 | 0 | 636 | 0 | Start |
| 13 | 47 | 19 | | 636 | | End |

# Video Review Record - Double-Shell Tank Annulus

Review Date: 02/01/93

Tank Number: 241-SY-103-18B  Inspection Date: 12/04/92  Tape Number: 6

Reviewer: J. Harris/ _____ (Print/Signature)

| Tape Time | | VCR | Complementary Information | | | Reviewer Comments |
|---|---|---|---|---|---|---|
| Hr | Min | Time (Min-Sec) | Azim. (Deg.) | Depth (in.) | Tilt (Deg.) | |
| 9 | 20 | 46 | 0 | 300 | -89 | Start |
| 9 | 25 | 20 | 44 | 300 | 10 | Residue deposits on inner wall |
| 9 | 27 | 34 | -60 | 300 | 43 | Zoom in - staining- inner wall |
| 9 | 39 | 29 | -240 | 300 | 85 | Backing bar outer wall |
| 9 | 39 | 41 | -240 | 300 | | End |
| 9 | 42 | 19 | -26 | 348 | -85 | Start |
| 9 | 47 | 01 | -120 | 348 | -17 | Thermocouple - inner wall |
| 9 | 52 | 14 | -220 | 348 | | End |
| 9 | 56 | 56 | 0 | 396 | -89 | Start |
| 10 | 9 | 53 | -220 | 396 | | End |
| 10 | 11 | 47 | -20 | 444 | -89 | Start |
| 10 | 21 | 30 | -220 | 444 | | End |
| 10 | 29 | 19 | -20 | 492 | -89 | Start |
| 10 | 34 | 26 | -120 | 492 | 70 | Scale, several rust spots |
| 10 | 40 | 15 | -220 | 492 | | End |
| 12 | 36 | 30 | -20 | 540 | -90 | Start |

# Video Review Record - Double-Shell Tank Annulus

Review Date: 02/01/93

Tank Number: 241-SY-103-18B  Inspection Date: 12/04/92  Tape Number: 6

Reviewer: J. Harris/ _____ (Print/Signature)

| Tape Time | | VCR | Complementary Information | | | Reviewer Comments |
|---|---|---|---|---|---|---|
| Hr | Min | Time (Min-Sec) | Azim. (Deg.) | Depth (in.) | Tilt (Deg.) | |
| 12 | 49 | 06 | -220 | 540 | | End |
| 12 | 51 | 34 | -20 | 588 | -90 | Start |
| 13 | 04 | 09 | -220 | 588 | | End |
| 13 | 08 | 46 | 10 | 636 | -10 | Start |
| 13 | 11 | 55 | -159 | 636 | -27 | Air passage way - round hole cut in steel ring |
| 13 | 14 | 30 | | 636 | | End |

# DISTRIBUTION SHEET

WHC-SD-WM-RPT-077
REV. 0

To: Tank Farms Technical Assessments

From: System Structural Integrity Assessments

Date: Sept. 1993

Project Title/Work Order:

VISUAL EXAMINATION REPORT FOR TANK ANNULI AT THE 241-AP TANK FARM

EDT No.: 140990

ECN No.:

| Name | MSIN | With Attachment | EDT/ECN & Comment | EDT/ECN Only |
|---|---|---|---|---|
| L. D. Blackburn | H5-67 | X | | |
| W. C. Carlos | H5-52 | X | | |
| R. A. Dodd | R1-51 | X | | |
| D. J. Green | H5-53 | X | | |
| J. Harris (5) | H5-52 | X | | |
| J. P. Hauptmann | S2-03 | X | | |
| R. Malhan | S1-57 | X | | |
| V. D. Maupin | R1-51 | X | | |
| M. A. McLaughlin | H5-34 | X | | |
| D. C. Pfluger | H5-52 | X | | |
| R. S. Popielarcyk | R1-30 | X | | |
| D. L. Powell Jr. | L6-13 | X | | |
| L. Ruffin | R2-95 | X | | |
| E. B. Schwenk | H5-52 | X | | |
| K. V. Scott | H5-52 | X | | |
| D. B. Smet | X5-52 | X | | |
| J. D. Thomson | R1-30 | | | X |
| F. R. Vollert | H5-09 | X | | |
| E. J. Walter | H5-52 | X | | |
| Central Files (Orig. + 3 copies) | L8-04 | X | | |
| ~~Station 21~~ | ~~H5-51~~ | | | ~~X~~ |
| ~~IRA Clearance~~ | ~~H4-17~~ | ~~X~~ | | |

9413147.0210

| Date Received: 9/22/93 | INFORMATION RELEASE REQUEST | Reference: WHC-CM-3-4 |
|---|---|---|

**Complete for all Types of Release**

| Purpose | | ID Number (include revision, volume, etc.) |
|---|---|---|
| [] Speech or Presentation<br>[] Full Paper<br>[] Summary<br>[] Abstract<br>[] Visual Aid<br>[] Speakers Bureau<br>[] Poster Session<br>[] Videotape<br>(Check only one suffix) | [] Reference<br>[X] Technical Report<br>[] Thesis or Dissertation<br>[] Manual<br>[] Brochure/Flier<br>[] Software/Database<br>[] Controlled Document<br>[] Other | WHC-SD-WM-RPT-077, Rev. 0<br>List attachments.<br>N/A<br>Date Release Required<br>09/20/93 |

| Title VISUAL EXAMINATION REPORT FOR TANK ANNULI AT THE 241-AP TANK FARM | Unclassified Category UC- | Impact Level N3Q |
|---|---|---|

| | |
|---|---|
| New or novel (patentable) subject matter? [X] No [] Yes<br>If "Yes", has disclosure been submitted by WHC or other company?<br>[] No [] Yes Disclosure No(s). | Information received from others in confidence, such as proprietary data, trade secrets, and/or inventions?<br>[X] No [] Yes (Identify) |
| Copyrights? [X] No [] Yes<br>If "Yes", has written permission been granted?<br>[] No [] Yes (Attach Permission) | Trademarks?<br>[] No [X] Yes (Identify) Kodak (pg. 8) |

**Complete for Speech or Presentation**

| Title of Conference or Meeting | Group or Society Sponsoring |
|---|---|
| | |

| Date(s) of Conference or Meeting | City/State | Will proceedings be published? [] Yes [] No<br>Will material be handed out? [] Yes [] No |
|---|---|---|

Title of Journal

**CHECKLIST FOR SIGNATORIES**

| Review Required per WHC-CM-3-4 | Yes | No | Reviewer - Signature Indicates Approval: Name (printed) / Signature / Date |
|---|---|---|---|
| Classification/Unclassified Controlled Nuclear Information | [] | [X] | |
| Patent - General Counsel | [X] | [] | SW Berglin PER OGC memo 2/4/93 |
| Legal - General Counsel | [X] | [] | SW Berglin PER OGC memo 2/4/93 |
| Applied Technology/Export Controlled Information or International Program | [] | [X] | |
| WHC Program/Project | [] | [X] | |
| Communications | [] | [X] | |
| RL Program/Project | [] | [X] | Review Required Per telecon L. Demot 9/21/93 |
| Publication Services | [X] | [] | DJ Hastings - Per telecon 9/22/93 |
| Other Program/Project | [] | [X] | |

Information conforms to all applicable requirements. The above information is certified to be correct.

| | Yes | No |
|---|---|---|
| References Available to Intended Audience | [X] | [] |
| Transmit to DOE-HQ/Office of Scientific and Technical Information | [] | [X] |

Author/Requestor (Printed/Signature) Date

J. Harris 9/20/93

Intended Audience

[] Internal [] Sponsor [X] External

Responsible Manager (Printed/Signature) Date

K. V. Scott for 9/21/93

**INFORMATION RELEASE ADMINISTRATION APPROVAL STAMP**

Stamp is required before release. Release is contingent upon resolution of mandatory comments.

APPROVED FOR RELEASE OFFICIAL DOCUMENT DS 9/22/93

| Date Cancelled | Date Disapproved |
|---|---|
| | |

9413147.0211

ID Number WHC-SD-WM-RPT-077, Rev. 0

| Lead Author | Phone | MSIN | Other Author(s) or Requestor |
|---|---|---|---|
| J. Harris | 6-3838 | H5-52 | None |
| **Project or Program** | **Lead Org Code** | | **Sponsor Agency (DOE, DOT, NRC, USGS, etc.)** |
| Tank Farm | 23460 | | DOE |
| **Editor** | **Phone** | **MSIN** | **DOE/HQ Program (DP, EH, EM, NE, etc.)** |
| D. J. Hastings | 6-9185 | H6-31 | EM |

| Mandatory Comments (Only mandatory comments are to be documented. All other comments should be made on a copy of the information submitted for review and returned to the author.) | Reviewer Name & Signature | Date | Resolution | Reviewer Name & Signature | Date |
|---|---|---|---|---|---|
| | | | | | |
| | | | | | |
| | | | | | |
| | | | | | |
| | | | | | |
| | | | | | |
| | | | | | |
| | | | | | |
| | | | | | |
| | | | | | |
| | | | | | |
| | | | | | |
| | | | | | |

Legends/Notices/Markings (required per WHC-CM-3-4 or guidance organization.) (Reviewer initials)

| | Affix Yes | Affix No | | Affix Yes | Affix No |
|---|---|---|---|---|---|
| Applied Technology | [ ] | [ ] | Predecisional Information | [ ] | [ ] |
| Business-Sensitive Information | [ ] | [ ] | Programmatic Notice | | |
| Computer Software Notice | [ ] | [ ] | Proprietary Information | [ ] | [ ] |
| Copyright License Notice | [ ] | [ ] | Purpose and Use | [ ] | WJS |
| Export Controlled Information | [ ] | [ ] | Thesis/Dissertation | [ ] | [ ] |
| Legal Disclaimer | WJS | [ ] | Trademark Disclaimer | [ ] | [ ] |
| Limited Disclosure | [ ] | [ ] | Unclassified Controlled Nuclear Information/Official Use Only | [ ] | [ ] |
| Patent Status | [ ] | WJS | | | |

N/A

Responsible Manager (Printed/Signature)

Additional Information

9413147.0212

SEP 22 1993

# ENGINEERING DATA TRANSMITTAL



1. EDT 140990

| | | |
|---|---|---|
| 2. To: (Receiving Organization) Fluids Systems Engineering | 3. From: (Originating Organization) System Structural Integrity Assessment | 4. Related EDT No.: 140954 |
| 5. Proj./Prog./Dept./Div.: W23460/N13AB | 6. Cog. Engr.: J. Harris | 7. Purchase Order No.: N/A |
| 8. Originator Remarks: The photographs in the final issue will be color xeroxed. | | 9. Equip./Component No.: N/A |
| | | 10. System/Bldg./Facility: 241-AP |
| 11. Receiver Remarks: | | 12. Major Assm. Dwg. No.: N/A |
| | | 13. Permit/Permit Application No.: N/A |
| | | 14. Required Response Date: 09/03/93 |

9413147.0213

15. DATA TRANSMITTED

| (A) Item No. | (B) Document/Drawing No. | (C) Sheet No. | (D) Rev. No. | (E) Title or Description of Data Transmitted | (F) Impact Level | (G) Reason for Transmittal | (H) Originator Disposition | (I) Receiver Disposition |
|---|---|---|---|---|---|---|---|---|
| 1 | WHC-SD-WM-RPT-077 | | 0 | Visual Examination of Tank Annuli at the 241-AP Tank Farm | ~~24~~ 3 9 ~~24~~ | 1 | 1 | |
| | | | | | | | | |
| | | | | | | | | |
| | | | | | | | | |
| | | | | | | | | |

16. KEY

| Impact Level (F) | Reason for Transmittal (G) | Disposition (H) & (I) |
|---|---|---|
| 1, 2, 3, or 4 (see MRP 5.43) | 1. Approval 2. Release 3. Information 4. Review 5. Post-Review 6. Dist. (Receipt Acknow. Required) | 1. Approved 2. Approved w/comment 3. Disapproved w/comment 4. Reviewed no/comment 5. Reviewed w/comment 6. Receipt acknowledged |

17. SIGNATURE/DISTRIBUTION (See Impact Level for required signatures)

| (G) Reason | (H) Disp. | (J) Name | (K) Signature | (L) Date | (M) MSIN | (J) Name | (K) Signature | (L) Date | (M) MSIN | (G) Reason | (H) Disp. |
|---|---|---|---|---|---|---|---|---|---|---|---|
| 1 | 1 | Cog.Eng. J. Harris | J Harris | 9/9/93 | H5-52 | | | | | | |
| 1 | 1 | Cog. Mgr. K. V. Scott | K V Scott | 9/9/93 | H5-52 | | | | | | |
| 1 | 1 | QA R. Malhan | R. Malhan | 9/14/93 | S1-57 | | | | | | |
| 1 | 1 | D. L. Powell | D L Powell | 9/14/93 | L4-32 | | | | | | |
| 1 | 1 | F. R. Vollert | F R Vollert | 9/20/93 | H5-09 | | | | | | |
| 1 | 1 | E. J. Walter | E J Walter | 9/14/93 | H5-52 | | | | | | |
| 1 | 1 | L. Ruffin | L Ruffin | 9/14/93 | R1-51 | | | | | | |

| 18. | 19. | 20. | 21. DOE APPROVAL (if required) |
|---|---|---|---|
| J. Harris J Harris 9/9/93 Signature of EDT Originator / Date | M. A. McLaughlin M. A. McLaughlin 9/20/93 Authorized Representative for Receiving Organization / Date | K. V. Scott K V Scott 9/17/93 Cognizant/Project Engineer's Manager / Date | Ltr. No. [] Approved [] Approved w/comments [] Disapproved w/comments |

BD-7400-172-2 (07/89) (EF) GEF097

BD-7400-172-1 (07/91)

# SUPPORTING DOCUMENT

1. Total Pages 63

| 2. Title | 3. Number | 4. Rev No. |
|---|---|---|
| VISUAL EXAMINATION REPORT FOR TANK ANNULI AT THE 241-AP TANK FARM | WHC-SD-WM-RPT-077 | 0 |

5. Key Words

Double-Shell Tank Examination, CCTV, WAC, Video Inspection System, Annulus Examination, Tank Integrity Assessment

6. Author

Name: J. Harris

Signature

Organization/Charge Code 23460/N13AB

7. Abstract

This document records the results of the examination of the annuli of the double-shell tanks at the 241-AP Tank Farm. This examination supports the "not unfit for use" assessment of the tanks in accordance with the Washington Administrative Code 173-303-640(2).

APPROVED FOR
PUBLIC RELEASE
9/22/93 D. Holle

8. PURPOSE AND USE OF DOCUMENT - This document was prepared for use within the U.S. Department of Energy and its contractors. It is to be used only to perform, direct, or integrate work under U.S. Department of Energy contracts. This document is not approved for public release until reviewed.

PATENT STATUS - This document copy, since it is transmitted in advance of patent clearance, is made available in confidence solely for use in performance of work under contracts with the U.S. Department of Energy. This document is not to be published nor its contents otherwise disseminated or used for purposes other than specified above before patent approval for such release or use has been secured, upon request, from the Patent Counsel, U.S. Department of Energy Field Office, Richland, WA.

DISCLAIMER - This report was prepared as an account of work sponsored by an agency of the United States Government. Neither the United States Government nor any agency thereof, nor any of their employees, nor any of their contractors, subcontractors or their employees, makes any warranty, express or implied, or assumes any legal liability or responsibility for the accuracy, completeness, or any third party's use or the results of such use of any information, apparatus, product, or process disclosed, or represents that its use would not infringe privately owned rights. Reference herein to any specific commercial product, process, or service by trade name, trademark, manufacturer, or otherwise, does not necessarily constitute or imply its endorsement, recommendation, or favoring by the United States Government or any agency thereof or its contractors or subcontractors. The views and opinions of authors expressed herein do not necessarily state or reflect those of the United States Government or any agency thereof.

9. Impact Level A 3Q

10. RELEASE STAMP

OFFICIAL RELEASE BY WHC (20)
DATE SEP 22 1993
Sta. 21

9413147.0214

WHC-SD-WM-RPT-077
REV. 0

# VISUAL EXAMINATION REPORT FOR TANK ANNULI AT THE 241-AP TANK FARM

AUGUST 1993

9413147.0215


Prepared By: _____ 9/13/93
J. Harris, Principal Engineer — Date
System Structural Integrity Assessments

Examination Engineer: _____ 9/14/93
D. L. Powell Jr., Engineering Technician — Date
Equipment Testing Laboratory

Reviewed By: _____ 9/9/93
E. J. Walter, Principal Engineer — Date
System Structural Integrity Assessments

Approved By: _____ for 9/9/93
K. V. Scott, Manager — Date
System Structural Integrity Assessments



WESTINGHOUSE HANFORD COMPANY
For The
U.S. Department of Energy
Richland Field Office

## CONTENTS

PAGE

1.0 INTRODUCTION . . . . . 1

2.0 OBJECTIVE . . . . . 1

3.0 SCOPE . . . . . 2

4.0 CCTV EXAMINATION EQUIPMENT AND PROCEDURES . . . . . 3

5.0 GENERAL OBSERVATIONS . . . . . 6

6.0 CONCLUSIONS AND RECOMMENDATIONS . . . . . 7
6.1 CONCLUSIONS . . . . . 7
6.2 RECOMMENDATIONS . . . . . 8

7.0 REFERENCES . . . . . 9

ATTACHMENT 1 - Verification Check Sheets . . . . . A1-1

ATTACHMENT 2 - Photograph, Annulus, Tank 241-AP-101 . . . . . A2-1

ATTACHMENT 3 - Examination Photographs . . . . . A3-1

ATTACHMENT 4 - Video Review Record - Doubles-Shell Tank Annulus 241-AP Tanks . . . . . A4-1

## FIGURES

FIGURE 1 - Typical Arrangement for Annulus Examination of the Double-Shell Tanks . . . . . 5

9413147.0216

# VISUAL EXAMINATION REPORT FOR TANK ANNULI AT THE 241-AP TANK FARM

## 1.0 INTRODUCTION

The Washington State Department of Ecology's *Dangerous Waste Regulations*, Washington Administrative Code (WAC) 173-303-640(2) (a) has provisions for integrity assessments of tank systems. This section of the WAC states:

> "For each existing tank system, the owner or operator must determine that the tank system is not leaking or is unfit for use."

Additionally the WAC states that the written assessment, to be kept on file at the facility, will be reviewed and certified by an independent, qualified registered professional engineer, in accordance with WAC 173-303-810-(13)(a). These regulations are applicable to the hazardous portion of wastes stored in the various facilities of the Tank Farm Project.

The *Tank Farm Project Tank Integrity Assessment Program Plan*, WHC-SD-WM-AP-017, Rev. 0, identifies the tasks to be performed during the assessment of the existing tank system which are regulated by the WAC. The Tank Farm Project Tank Integrity Assessment Program Plan describes the components to be assessed and the examinations, tests, analysis, data management and reporting requirements.

Closed circuit television (CCTV) examination of select areas of the annulus of the tanks was performed and the results of the examinations have been reviewed as required by the integrity assessment program plan. The findings of those reviews are contained in this report.

This report satisfies the visual examination requirements of the Tank Farm Project Tank Integrity Assessment Program Plan.

## 2.0 OBJECTIVE

The objective of the program plan is to determine if the tanks system is "not leaking" or is "unfit for use", in order to satisfy the WAC requirements.

The program plan requires this examination to assess the degradation and corrosion of the primary and secondary shells, to provide a record of surface conditions as a baseline for subsequent examinations, to identify the present state of corrosion of the primary and secondary shell walls in the annulus, and to survey the annulus for surface conditions and hardware that could restrict or obstruct access for the performance of other non-destructive examinations.



9413147.0217

Further, this type of examination is able and intended to detect visible cracks, potential leak sites, and other physical impairments. This report in accordance with the objective of the program plan, documents how the examination was conducted, the observations and the conclusions.

## 3.0 SCOPE

The visual examinations were conducted in two phases:

PHASE I

A CCTV camera was lowered via two 6-in. pipe dome risers approximately 180° apart in each of the eight 241-AP double-shell tanks (DST); see Table 1, thereby providing access to the tank annulus.

The visible surfaces of the primary and secondary steel tanks and the insulating concrete were examined by an examination engineer, and all images were recorded on video tape. Verification check sheets were completed during the CCTV examinations by the examination engineer to provide an examination record. See Attachment 1.

PHASE II

A review of the video tape was performed after completion of the initial examination of the eight tanks in the farm. Review observation records for the CCTV video tapes have been completed (see Attachment 4) for the annuli listed below:

241-AP-101, riser 17-54° and 236°
241-AP-102, riser 17-54° and 236°
241-AP-103, riser 17-54° and 236°
241-AP-104, riser 17-54° and 236°
241-AP-105, riser 17-54° and 236°
241-AP-106, riser 17-54° and 236°
241-AP-107, riser 17-54° and 236°
241-AP-108, riser 17-54° and 236°.

9413147.0218

TABLE 1

LIST OF 241-AP TANK ANNULUS EXAMINATION TAPES
(All tapes reviewed by J. Harris)

| Exam Tape # | Exam Access Riser* | Exam Date | Exam Depth Range (in.) | Date Reviewed |
|---|---|---|---|---|
| 1 | 241-AP-101-17-54° | 02/10/92 | 300-636 | 03/25/93 |
| 2 | 241-AP-101-17-236° | 02/11/92 | 300-636 | 03/31/93 |
| 3 | 241-AP-102-17-236° | 03/13/92 | 300-630 | 04/01/93 |
| 4 | 241-AP-102-17-54° | 02/14/92 | 300-636 | 06/07/93 |
| 5 | 241-AP-103-17-54° | 02/19/92 | 300-636 | 06/08/93 |
| 6 | 241-AP-103-17-236° | 02/21/92 | 300-636 | 06/08/93 |
| 7 | 241-AP-104-17-54° | 02/24/92 | 300-636 | 06/21/93 |
| 8 | 241-AP-104-17-236° | 02/25/92 | 300-636 | 07/07/93 |
| 9 | 241-AP-105-17-54° | 02/27/92 | 300-636 | 07/08/93 |
| 10 | 241-AP-105-17-236° | 02/28/92 | 300-636 | 07/09/93 |
| 11 | 241-AP-106-17-54° | 03/02/92 | 300-636 | 07/13/93 |
| 12 | 241-AP-106-17-236° | 03/03/92 | 300-636 | 07/14/93 |
| 13 | 241-AP-107-17-54° | 03/14/92 | 300-636 | 07/15/93 |
| 14 | 241-AP-107-17-236° | 03/06/92 | 300-636 | 07/16/93 |
| 15 | 241-AP-108-17-54° | 03/17/92 | 300-636 | 07/19/93 |
| 16 | 241-AP-108-17-236° | 03/17/92 | 300-636 | 07/19/93 |

*Reference SD-RE-TI-093, *Double-Shell Underground Waste Storage Tanks, Riser Survey*.

## 4.0 CCTV EXAMINATION EQUIPMENT AND PROCEDURES

The *Acceptance Test Report for Double-Shell Tank Inspections*, WHC-SD-WM-ATR-018, (WHC 1992) demonstrates the acceptability of the CCTV examination system. The acceptance test report provides the following description of the equipment and activities for DST inspections. The examination system consists



9413147.0219

of a remotely operated video camera suspended on aluminum rods. The tilt capability of the camera is 65° up and 90° down from the horizontal plane. The horizontal pan range is approximately 340°. The camera is equipped with lights of variable intensity. The camera is qualified to examine from a distance of 20 ft. (6.09m) at which resolution is equivalent to that attainable by direct visual examination. Direct visual examination is equivalent to resolving a 1/32 in. (0.079-cm) line on an 18 percent neutral gray card at a distance of 24 in.(60.0-cm). This standard is taken from the *Rules for In-Service Inspection of Nuclear Power Plant Components*, Section XI, ASME Boiler and Pressure Vessel Code (ASME 1989).

Electronic position encoders were used to provide real-time digital position reference of the CCTV images in the annulus. The view of the examination camera was monitored by the examination engineer during the examination. The focus, zoom, lighting, and speed of the camera were adjusted to provide the optimum viewing with the equipment available. If a suspected discrepancy appeared, every effort was made to obtain a clear image for review and record. Additional detail regarding the equipment used and the inspection procedure is available in *CCTV Examination Operating Procedure for the Double Shell Tanks*, WHC-SD-WM-TCP-003, Rev. 0 (WHC 1991).

The camera was lowered through the designated risers into the annulus. The examination began with the camera lowered approximately 25 feet (7.6m) below the top of the riser and continued in 4-foot (1.2m) increments to a depth where the bottom knuckle of the primary-shell could be viewed. A nearly complete vertical strip of the surface of the primary and secondary-shell was examined from the 25 foot (7.6m) depth to and including the secondary-shell bottom of the annulus.

The various risers used for access into the annuli may be located at different radii. When a riser is located closer to the outer wall, the actual degree of rotation the camera can achieve, without hitting the secondary shell, is reduced. The actual amount of camera rotation is shown on the video review records in Attachment 4.

Approximately 18 percent of the primary-shell surface and 30 percent of the secondary-shell surface were examined in each tank. Figure 1 depicts the viewing position of and the typical area covered by the camera in the annulus. The primary-shell surface coverage is limited by the curvature of the tank. The secondary-shell surface coverage is limited by the range of the camera, which is 20 feet (6.09m).

9413147.0220

9413147.0221

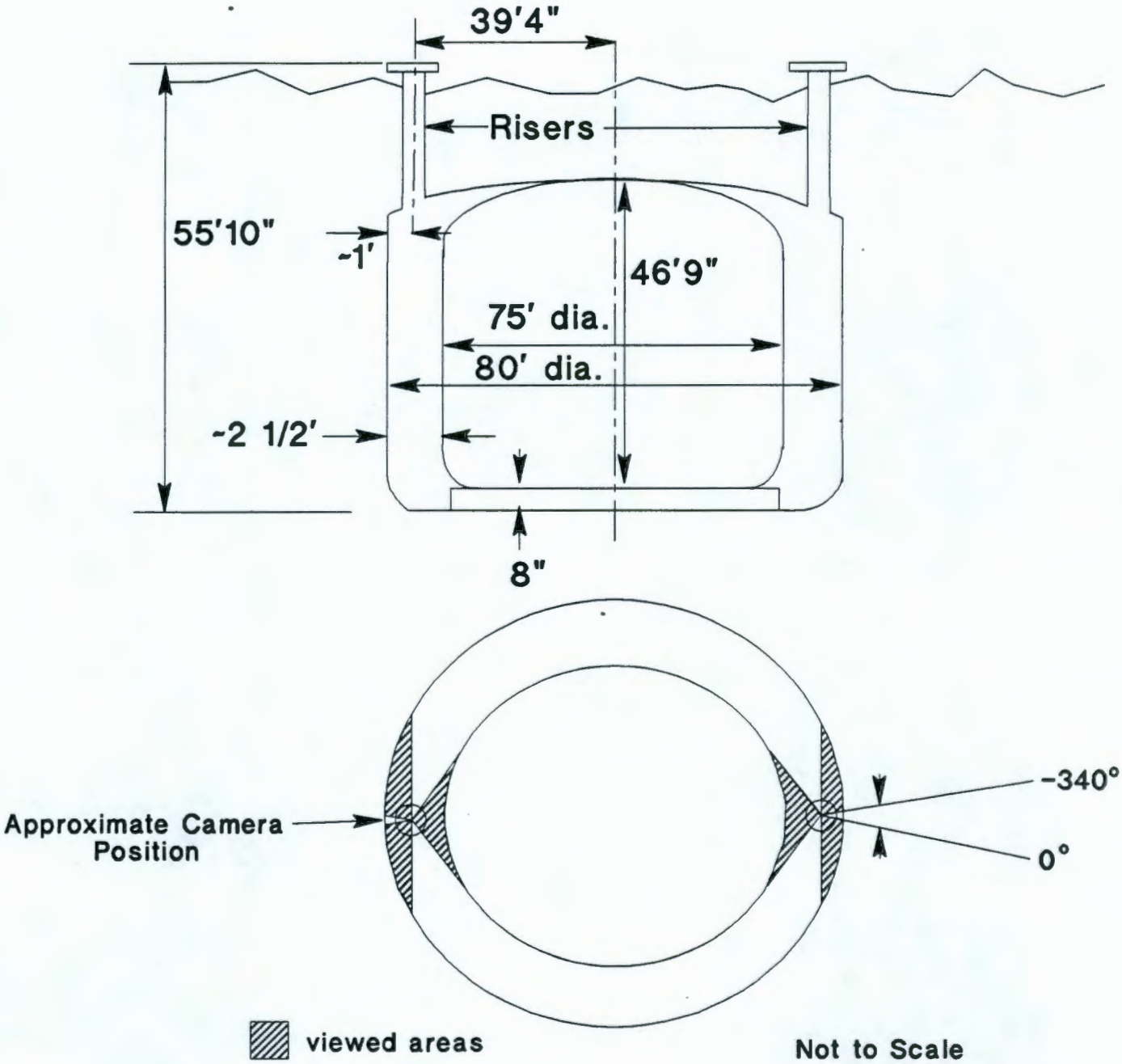


FIGURE 1. Typical Arrangement for Annulus Examination of the Double-Shell Tanks.

The radiation rates were measured at different depths in each tank annulus A calibrated R07 probe was used. The maximum gamma radiation exposure rates in roentgens per hour (R/hr) encountered by the equipment in the 241-AP tank farm annuli are listed as follows:

| | |
|---|---|
| 241-AP-101 - 0.0 | 241-AP-105 - 30.0 |
| 241-AP-102 - 30.0 | 241-AP-106 - 1.9 |
| 241-AP-103 - 20.0 | 241-AP-107 - 1.9 |
| 241-AP-104 - 30.0 | 241-AP-108 - .710. |

## 5.0 GENERAL OBSERVATIONS

As previously noted, the video examination of the primary tank and secondary liner wall and the insulating concrete surfaces was accomplished using a closed circuit television (CCTV). As the examination occurred, the image was viewed on a monitor by the examination engineer at the site and recorded on a video cassette tape. Areas with indications of suspected material degradation were revisited until the examination was considered adequate.

The photograph in Attachment 2 provides a reference view of the condition of the surface of the 241-SY-101 primary shell taken after construction and before the tank was placed in service. The SY tank photograph is included, because a similar construction photograph of the AP tank farm was unavailable. Unlike other Hanford tank farms, the 241-AP primary shell steel plates surfaces were sand blasted during construction. This process removed the original mill scale.

The 241-AP video tapes listed in Table 1, were viewed by a certified second party examiner, through the System Structural Integrity Assessment group, to provide recorded, independent review observations (Attachment 4).

Rust does exist over many areas of the tank shell surfaces, however the degradation of the tanks is considered minimal. The accumulation of rust was generally greater at the welds and the adjacent heat affected zone than at other areas. The degree of rust varies from tank to tank, but more markedly between the primary and secondary-shells. Without exception, the progress of rust on the secondary-shell exceeds the progress of rust on the primary-shell.

In several areas on both primary and secondary-shell surfaces, condensation appears to have existed. Also on the secondary-shell in the haunch area there are several circular water lines with accompanying rust residue. It is believed that this rust was caused when the haunch subassemblies were inverted before assembly, and were allowed to collect rainwater and condensation (dew).



9413147.0222

Attachment 4 describes areas of corrosion, markings and blemishes that were observed and cannot be accounted for. None are thought to reflect significant degradation of the tank integrity. Several areas of the castable refractory concrete were noted as being cracked. The cracks are radial in direction and perpendicular to the top surface. The cracks seem to be consistently spaced between the air passageways.

There is evidence of liquid draining down the primary tank and secondary shells during at least two separate intervals. The evidence of the earlier draining is the corrosion pattern, especially on the secondary liner wall. The corrosion covers a large portion of the surface with some panels showing more corrosion residue than others and there are islands where the mill scale remains. Evidence of the second draining is a whitish residue which streaks down both shells, originating in the haunch region. This whitish residue, which generally overlays the rust residue or mill scale, does not appear to have initiated or accelerated the corrosion process.

Attachment 3 contains a photograph taken from the video tapes which depict conditions observed. Photograph A3-2 is a view of the castable refractory concrete.

The 20 degree azimuth rotation of the camera when in the near horizontal position and viewing the primary shell wall straight on, often times allows an area of the tank wall to be missed from viewing.

9413147.0223

## 6.0 CONCLUSIONS AND RECOMMENDATIONS

### 6.1 CONCLUSIONS

This visual examination found no indication of primary steel shell tank leakage.

Further, this examination did not detect evidence of visible cracks, potential leak sites, or other physical impairments to the tank shells.

The cracks in the castable refractory are minor. No indications of primary shell settlements were observed. The refractory provides vertical support for the primary shell. The total vertical support for both steel shells is the reinforced concrete slab under the secondary bottom.

## 6.2 RECOMMENDATIONS

1. A Kodak[1] color bar inside the annulus would be useful for establishing a more accurate color comparison.

2. The humidity in the annulus should be maintained at 70 percent or less to reduce the potential for corrosion or rust. See *Metals Handbook* (1987, p.511) and *Shreir* (1963, p.2.11) for the effect of atmospheric factors on corrosion. Precautions should be taken to keep water out of the annulus.

3. A comparison examination of these same tank areas should be included in the subsequent periodic integrity assessment examinations of these tanks.

4. Long term plans should evaluate the need to perform future additional visual examinations through other risers. If future examinations are only to coincide with this examination, it is recommended that the examination frequency be ten years minimum.

5. The examination engineer should keep a running log of azimuth and elevation during the recording process of future visual examinations.

6. The tilt range of the camera in the very high and low extremes presently captures the same area of view approximately 4 times in the course of the examination. The tilt range should be reduced to minimize this redundancy.

9413147.0224

[1]Kodak is a registered trademark of the Eastman Kodak Company.

## 7.0 REFERENCES

Anderson, A. A., 1992, *Double-Shell Underground Waste Storage Tanks, Riser Survey*, SD-RE-TI-093, Westinghouse Hanford Company, Richland, Washington.

Ecology, 1990, "Dangerous Waste Regulations," *Washington Administrative Code* Chapter 173-303-640(2), as amended, Washington State Department of Ecology, Olympia, Washington.

Eacker, J. A., 1991, *Tank Farm Project Tank Integrity*, WHC-SD-WM-AP-017, Rev. 0, Westinghouse Hanford Company, Richland, Washington.

Sumsion, M. L., 1992, *The Acceptance Test Report for Double-Shell Tank Inspections*, WHC-SD-WM-ATR-018, Westinghouse Hanford Company, Richland, Washington.

ASME, *Rules for In-Service Inspection of Nuclear Power Plant Components, Section XI, 1989*, American Society of Mechanical Engineers Boiler and Pressure Vessel Code, American Society of Mechanical Engineers, New York, New York.

Sumsion, M. L., 1991, *CCTV Examination Operating Procedure for the Double Shell Tanks*, WHC-SD-TCP-003, Rev. 0, Westinghouse Hanford Company, Richland, Washington.

Metals Handbook, 1987, Corrosion, Ninth Edition, Volume 13, ASM International, Metals Park, Ohio.

Shreir, L. L., 1963, Corrosion, Volume 1, John Wiley & Sons, New York, New York.

9413147.0225

# ATTACHMENT 1

## Verification Check Sheets

9413147.0226

| TANK # | LOC. I.D. | VIDEO RESOLUTION CHECK IF O.K. | COMMENTS | VERIFIED BY | DATE/ TIME |
|---|---|---|---|---|---|
| AP-101 | Riser 17-54 Deg | OK ✓ | corrosion area AZMT4-4 Depth 396 | DZ Powell | 2/19/92 |
| AP-101 | Riser 17-236 Deg | ✓ | Looks clean | DZ Powell | 2/11/92 |
| AP-102 | Riser 17-236 Deg | ✓ | looks clean | DZ Powell | 2/14/92 |
| AP-102 | Riser 17-54 Deg | ✓ | looks clean | DZ Powell | 2/19/92 |
| AP-103 | Riser 17-54 Deg | ✓ | looks clean | DZ Powell | 2/20/92 |
| AP-103 | Riser 17-236-Deg | ✓ | Lower part of tank was streaked-Ok | DZ Powell | 2/21/92 |
| AP-104 | Riser 17-54-Deg | ✓ | looks clean | DZ Powell | 2/25/92 |
| AP-104 | Riser 17-236-Deg | ✓ | looks clean | DZ Powell | 2/26/92 |
| AP-105 | " 17-54 Deg | ✓ | looks clean | DZ Powell | 2/28/92 |
| AP-105 | " 17-236 Deg | ✓ | looks clean | DZ Powell | 2/28/92 |
| AP-106 | " 17-54 Deg | ✓ | looks clean | DZ Powell | 3/2/92 |
| AP-106 | " 17-236 Deg | ✓ | looks clean | DZ Powell | 3/3/92 |
| AP-107 | 17-54 Deg | ✓ | looks clean | DZ Powell | 3/5/92 |
| AP-107 | " 17-236 Deg | ✓ | looks clean | DC Larson | 3/06/92 |
| AP-108 | " 17-54 Deg | ✓ | looks clean | DZ Powell | 3/17/92 |
| AP-108 | 17-236 Deg | ✓ | looks clean | DZ Powell | 3/18/92 |
| | | | | | |
| | | | | | |
| | | | | | |
| | | | | | |
| | | | | | |
| | | | | | |
| | | | | | |
| | | | | | |
| | | | | | |
| | | | | | |

9413147.0227

9413147.0228

AREAS OF INTEREST EXAMINATION VERIFICATION CHECK SHEET

| INITIAL/DATE/TIME | TANK # | RISER I.D. | VIDEO TAPE I.D. # |
|---|---|---|---|
| RJP / 2/10/92 / 9:00AM | 241-AP-101 17-54 Deg | 17 @ 54° | AP-1 |
| Completed RJP 12/10/92 3:30 | OUTSIDE WALL OF THE PRIMARY TANK | | |
| Completed RJP 12/10/92 3:30 | INSIDE WALL OF THE SECONDARY TANK | | |
| Completed RJP 12/10/92 3:30 | PRIMARY TANK UPPER/LOWER KNUCKLE AREA | | |
| Completed RJP 12/10/92 3:30 | SECONDARY UPPER/LOWER KNUCKLE AREA | | |
| Completed RJP 12/10/92 3:30 | CONCRETE EDGE BELOW THE PRIMARY TANK | | |
| Completed RJP 12/10/92 3:30 | ALL WELDS | | |
| Completed RJP 12/10/92 3:30 | ANNULUS FLOOR | | |
| Completed RJP 12/10/92 3:30 | EXIT OPENING OF THE SLOTS IN THE INSULATING CONCRETE UNDER THE PRIMARY TANK | | |
| | | | |

AZMTH: -4
Depth : 396
tilt : -19°

Rust area w/small black lines running vertical approx 4" wide 2½" tall (outer wall)

AREAS OF INTEREST EXAMINATION VERIFICATION CHECK SHEET

| INITIAL/DATE/TIME | TANK # 241-AP-101 -17-236 Deg | RISER I.D. 17 E 236 Deg | VIDEO TAPE I.D. # AP-2 |
|---|---|---|---|
| Completed EP 12/11/92 13:00 | OUTSIDE WALL OF THE PRIMARY TANK | | |
| Completed EP 12/11/92 13:00 | INSIDE WALL OF THE SECONDARY TANK | | |
| Completed EP 12/11/92 13:00 | PRIMARY TANK UPPER/LOWER KNUCKLE AREA | | |
| Completed EP 12/11/92 13:00 | SECONDARY UPPER/LOWER KNUCKLE AREA | | |
| Completed EP 12/11/92 13:00 | CONCRETE EDGE BELOW THE PRIMARY TANK | | |
| Completed EP 12/11/92 13:00 | ALL WELDS | | |
| Completed EP 12/11/92 13:00 | ANNULUS FLOOR | | |
| Completed EP 12/11/92 13:00 | EXIT OPENING OF THE SLOTS IN THE INSULATING CONCRETE UNDER THE PRIMARY TANK | | |
| | | | |

9413147.0229

AREAS OF INTEREST EXAMINATION VERIFICATION CHECK SHEET

| INITIAL/DATE/TIME | TANK # | RISER I.D. | VIDEO TAPE I.D. # |
|---|---|---|---|
| | 241-AP-102 -17-236-Deg | 17 @ 236 Deg | AP-3 |
| Completed DD / 2-14-92 / 11:00 AM | OUTSIDE WALL OF THE PRIMARY TANK | | |
| Completed DD / 2-14-92 / 11:00 AM | INSIDE WALL OF THE SECONDARY TANK | | |
| Completed DD / 2-14-92 / 11:00 AM | PRIMARY TANK UPPER/LOWER KNUCKLE AREA | | |
| Completed DD / 2-14-92 / 11:00 AM | SECONDARY UPPER/LOWER KNUCKLE AREA | | |
| Completed DD / 2-14-92 / 11:00 AM | CONCRETE EDGE BELOW THE PRIMARY TANK | | |
| Completed DD / 2-14-92 / 11:00 AM | ALL WELDS | | |
| Completed DD / 2-14-92 / 11:00 AM | ANNULUS FLOOR | | |
| Completed DD / 2-14-92 / 11:00 AM | EXIT OPENING OF THE SLOTS IN THE INSULATING CONCRETE UNDER THE PRIMARY TANK | | |
| | | | |

NOTE: At depth 588 the encorder was not set ahead until we reached the -100 AZMTH on 588 depth.

9413147.0230

AREAS OF INTEREST EXAMINATION VERIFICATION CHECK SHEET

| INITIAL/DATE/TIME | TANK # 241-AP-102 -17-54 Deg | RISER I.D. 17 @ 54 Deg | VIDEO TAPE I.D. # AP-4 |
|---|---|---|---|
| Completed 2-19-92 / RD / 10:00 AM | OUTSIDE WALL OF THE PRIMARY TANK | | |
| Completed 2-19-92 / RD / 10:00 AM | INSIDE WALL OF THE SECONDARY TANK | | |
| Completed 2-19-92 / RD / 10:00 AM | PRIMARY TANK UPPER/LOWER KNUCKLE AREA | | |
| Completed 2-19-92 / RD / 10:00 AM | SECONDARY UPPER/LOWER KNUCKLE AREA | | |
| Completed 2-19-92 / RD / 10:00 AM | CONCRETE EDGE BELOW THE PRIMARY TANK | | |
| Completed 2-19-92 / RD / 10:00 AM | ALL WELDS | | |
| Completed 2-19-92 / RD / 10:00 AM | ANNULUS FLOOR | | |
| Completed 2-19-92 / RD / 10:00 AM | EXIT OPENING OF THE SLOTS IN THE INSULATING CONCRETE UNDER THE PRIMARY TANK | | |
| | | | |

Note: At depth 396 the encorder was not set ahead until we reached the -200 AZMTH on the 396 depth.

9413147.0231

9413147.0232

AREAS OF INTEREST EXAMINATION VERIFICATION CHECK SHEET

| INITIAL/DATE/TIME | TANK # 241-AP-103 -17-54 Deg | RISER I.D. 17 @ 54 Deg | VIDEO TAPE I.D. # AP-5 |
|---|---|---|---|
| Completed DP 12/20/92/2:30 PM | OUTSIDE WALL OF THE PRIMARY TANK | | |
| Completed DP 12/20/92/ 2:30 PM | INSIDE WALL OF THE SECONDARY TANK | | |
| Completed DP 12/20/92/2:30 PM | PRIMARY TANK UPPER/LOWER KNUCKLE AREA | | |
| Completed DP 12/20/92/2:30 PM | SECONDARY UPPER/LOWER KNUCKLE AREA | | |
| Completed DP 12/20/92/2:30 PM | CONCRETE EDGE BELOW THE PRIMARY TANK | | |
| Completed DP 12/20/92/2:30 PM | ALL WELDS | | |
| Completed DP 12/20/92/2:30 PM | ANNULUS FLOOR | | |
| Completed DP 12/20/92/2:30 PM | EXIT OPENING OF THE SLOTS IN THE INSULATING CONCRETE UNDER THE PRIMARY TANK | | |
| | | | |

AREAS OF INTEREST EXAMINATION VERIFICATION CHECK SHEET

| INITIAL/DATE/TIME | TANK # 241-AP-103 -17-236 Deg | RISER I.D. 17@236 Deg | VIDEO TAPE I.D. # AP-6 |
|---|---|---|---|
| Completed 2/21/92/2:30PM | OUTSIDE WALL OF THE PRIMARY TANK | | |
| Completed 2/21/92/2:30 PM | INSIDE WALL OF THE SECONDARY TANK | | |
| Completed 2/21/92/2:30 PM | PRIMARY TANK UPPER/LOWER KNUCKLE AREA | | |
| Completed 2/21/92/2:30 PM | SECONDARY UPPER/LOWER KNUCKLE AREA | | |
| Completed 2/21/92/2:30 PM | CONCRETE EDGE BELOW THE PRIMARY TANK | | |
| Completed 2/21/92/2:30 PM | ALL WELDS | | |
| Completed 2/21/92/2:30 PM | ANNULUS FLOOR | | |
| Completed 2/21/92/2:30 PM | EXIT OPENING OF THE SLOTS IN THE INSULATING CONCRETE UNDER THE PRIMARY TANK | | |
| | | | |

9413147.0233

9413147.0234

AREAS OF INTEREST EXAMINATION VERIFICATION CHECK SHEET

| INITIAL/DATE/TIME | TANK # 241-AP-104 17-54 Deg | RISER I.D. 17@54 Deg | VIDEO TAPE I.D. # AP-7 |
|---|---|---|---|
| Completed RD 12-25-92 1:00 PM | OUTSIDE WALL OF THE PRIMARY TANK | | |
| Completed RD 12-25-92 1:00 PM | INSIDE WALL OF THE SECONDARY TANK | | |
| Completed RD 12-25-92 1:00 PM | PRIMARY TANK UPPER/LOWER KNUCKLE AREA | | |
| Completed RD 12-25-92 1:00 PM | SECONDARY UPPER/LOWER KNUCKLE AREA | | |
| Completed RD 12-25-92 1:00 PM | CONCRETE EDGE BELOW THE PRIMARY TANK | | |
| Completed RD 12-25-92 1:00 PM | ALL WELDS | | |
| Completed RD 12-25-92 1:00 PM | ANNULUS FLOOR | | |
| Completed RD 12-25-92 1:00 PM | EXIT OPENING OF THE SLOTS IN THE INSULATING CONCRETE UNDER THE PRIMARY TANK | | |
| | | | |

9413147.0235

AREAS OF INTEREST EXAMINATION VERIFICATION CHECK SHEET

| INITIAL/DATE/TIME | TANK # | RISER I.D. | VIDEO TAPE I.D. # |
|---|---|---|---|
| | 241-AP-104 17-236 Deg | 17@236 | AP-8 |
| Completed RD /2-26-92 / 11:00AM | OUTSIDE WALL OF THE PRIMARY TANK | | |
| Completed RD /2-26-92 / 11:00 AM | INSIDE WALL OF THE SECONDARY TANK | | |
| Completed RD /2-26-92 / 11:00 AM | PRIMARY TANK UPPER/LOWER KNUCKLE AREA | | |
| Completed RD /2-26-92 / 11:00 AM | SECONDARY UPPER/LOWER KNUCKLE AREA | | |
| Completed RD /2-26-92 / 11:00 AM | CONCRETE EDGE BELOW THE PRIMARY TANK | | |
| Completed RD /2-26-92 / 11:00 AM | ALL WELDS | | |
| Completed RD /2-26-92 / 11:00 AM | ANNULUS FLOOR | | |
| Completed RD /2-26-92 / 11:00 AM | EXIT OPENING OF THE SLOTS IN THE INSULATING CONCRETE UNDER THE PRIMARY TANK | | |
| | | | |

AREAS OF INTEREST EXAMINATION VERIFICATION CHECK SHEET

| INITIAL/DATE/TIME | TANK # 241-AP-105 17-54 Deg | RISER I.D. 17 @ 54 Deg | VIDEO TAPE I.D. # AP-9 |
|---|---|---|---|
| Completed DP 12-28-92/9:30 AM | OUTSIDE WALL OF THE PRIMARY TANK | | |
| Completed DP 12-28-92/9:30 AM | INSIDE WALL OF THE SECONDARY TANK | | |
| Completed DP 12-28-92/9:30 AM | PRIMARY TANK UPPER/LOWER KNUCKLE AREA | | |
| Completed DP 12-28-92/9:30 AM | SECONDARY UPPER/LOWER KNUCKLE AREA | | |
| Completed DP 12-28-92/9:30 AM | CONCRETE EDGE BELOW THE PRIMARY TANK | | |
| Completed DP 12-28-92/9:30 AM | ALL WELDS | | |
| Completed DP 12-28-92/9:30 AM | ANNULUS FLOOR | | |
| Completed DP 12-28-92/9:30 AM | EXIT OPENING OF THE SLOTS IN THE INSULATING CONCRETE UNDER THE PRIMARY TANK | | |
| | | | |

9413147.0236

9413147.0237

AREAS OF INTEREST EXAMINATION VERIFICATION CHECK SHEET

| INITIAL/DATE/TIME | TANK # 241-AP-101 -17-236 Deg | RISER I.D. 17 @ 236 | VIDEO TAPE I.D. # AP-10 |
|---|---|---|---|
| Completed RD 12-28-92/ 2:30 PM | OUTSIDE WALL OF THE PRIMARY TANK | | |
| Completed RD 12-28-92/ 2:30 PM | INSIDE WALL OF THE SECONDARY TANK | | |
| Completed RD 12-28-92/ 2:30 PM | PRIMARY TANK UPPER/LOWER KNUCKLE AREA | | |
| Completed RD 12-28-92/ 2:30 PM | SECONDARY UPPER/LOWER KNUCKLE AREA | | |
| Completed RD 12-28-92/ 2:30 PM | CONCRETE EDGE BELOW THE PRIMARY TANK | | |
| Completed RD 12-28-92/ 2:30 PM | ALL WELDS | | |
| Completed RD 12-28-92/ 2:30 PM | ANNULUS FLOOR | | |
| Completed RD 12-28-92/ 2:30 PM | EXIT OPENING OF THE SLOTS IN THE INSULATING CONCRETE UNDER THE PRIMARY TANK | | |
| | | | |

9413147.0238

AREAS OF INTEREST EXAMINATION VERIFICATION CHECK SHEET

| INITIAL/DATE/TIME | TANK # 241-AP-106 -17-54Deg | RISER I.D. 17 @ 54 Deg | VIDEO TAPE I.D. # AP-11 |
|---|---|---|---|
| Completed 13-2-92 13:00 PM | OUTSIDE WALL OF THE PRIMARY TANK | | |
| Completed 13-2-92 13:00 PM | INSIDE WALL OF THE SECONDARY TANK | | |
| Completed 13-2-92 13:00 PM | PRIMARY TANK UPPER/LOWER KNUCKLE AREA | | |
| Completed 13-2-92 13:00 PM | SECONDARY UPPER/LOWER KNUCKLE AREA | | |
| Completed 13-2-92 12:00 PM | CONCRETE EDGE BELOW THE PRIMARY TANK | | |
| Completed 13-2-92 13:00 PM | ALL WELDS | | |
| Completed 13-2-92 13:00 PM | ANNULUS FLOOR | | |
| Completed 13-2-92 13:00 PM | EXIT OPENING OF THE SLOTS IN THE INSULATING CONCRETE UNDER THE PRIMARY TANK | | |
| | | | |

AREAS OF INTEREST EXAMINATION VERIFICATION CHECK SHEET

| INITIAL/DATE/TIME | TANK # 241-AP-106 ~~17-236~~ 17-236Deg | RISER I.D. 17@ 236Deg | VIDEO TAPE I.D. # AP-12 |
|---|---|---|---|
| Completed BP 13-3-92 / 3:00PM | OUTSIDE WALL OF THE PRIMARY TANK | | |
| Completed BP 13-3-92 / 3:00 PM | INSIDE WALL OF THE SECONDARY TANK | | |
| Completed BP 13-3-92 / 3:00 PM | PRIMARY TANK UPPER/LOWER KNUCKLE AREA | | |
| Completed BP 13-3-92 / 3:00 PM | SECONDARY UPPER/LOWER KNUCKLE AREA | | |
| Completed BP 13-3-92 / 3:00 PM | CONCRETE EDGE BELOW THE PRIMARY TANK | | |
| Completed BP 13-3-92 / 3:00 PM | ALL WELDS | | |
| Completed BP 13-3-92 / 3:00 PM | ANNULUS FLOOR | | |
| Completed BP 13-3-92 / 3:00 PM | EXIT OPENING OF THE SLOTS IN THE INSULATING CONCRETE UNDER THE PRIMARY TANK | | |
| | | | |

9413147.0239

AREAS OF INTEREST EXAMINATION VERIFICATION CHECK SHEET

| INITIAL/DATE/TIME | TANK # 241-AP-107 -17-236 Deg | RISER I.D. 17@236 Deg | VIDEO TAPE I.D. # AP-14 |
|---|---|---|---|
| Completed DP / 3-9-92 / 10:00 AM | OUTSIDE WALL OF THE PRIMARY TANK | | |
| Completed DP / 3-9-92 / 10:00 AM | INSIDE WALL OF THE SECONDARY TANK | | |
| Completed DP / 3-9-92 / 10:00 AM | PRIMARY TANK UPPER/LOWER KNUCKLE AREA | | |
| Completed DP / 3-9-92 / 10:00 AM | SECONDARY UPPER/LOWER KNUCKLE AREA | | |
| Completed DP / 3-9-92 / 10:00 AM | CONCRETE EDGE BELOW THE PRIMARY TANK | | |
| Completed DP / 3-9-92 / 10:00 AM | ALL WELDS | | |
| Completed DP / 3-9-92 / 10:00 AM | ANNULUS FLOOR | | |
| Completed DP / 3-9-92 / 10:00 AM | EXIT OPENING OF THE SLOTS IN THE INSULATING CONCRETE UNDER THE PRIMARY TANK | | |
| | | | |

9413147.0240

AREAS OF INTEREST EXAMINATION VERIFICATION CHECK SHEET

| INITIAL/DATE/TIME | TANK # | RISER I.D. | VIDEO TAPE I.D. # |
|---|---|---|---|
| | 241-AP-107 17-54 Deg | 17 @ 54 Deg | AP-13 |
| Completed RD 13-5-92 12:30 | OUTSIDE WALL OF THE PRIMARY TANK | | |
| Completed RD 13-5-92 12:30 | INSIDE WALL OF THE SECONDARY TANK | | |
| Completed RD 13-5-92 12:30 | PRIMARY TANK UPPER/LOWER KNUCKLE AREA | | |
| Completed RD 13-5-92 12:30 | SECONDARY UPPER/LOWER KNUCKLE AREA | | |
| Completed RD 13-5-92 12:30 | CONCRETE EDGE BELOW THE PRIMARY TANK | | |
| Completed RD 13-5-92 12:30 | ALL WELDS | | |
| Completed RD 13-5-92 12:30 | ANNULUS FLOOR | | |
| Completed RD 13-5-92 12:30 | EXIT OPENING OF THE SLOTS IN THE INSULATING CONCRETE UNDER THE PRIMARY TANK | | |
| | | | |

Note: At 636 Depth and -214 AZMTH there is signs of liquid that has been dripping onto the bottom of the outer wall just below the electrical box.

Note: AZMTH was not working on the last pass

9413147.0241

AREAS OF INTEREST EXAMINATION VERIFICATION CHECK SHEET

| INITIAL/DATE/TIME | TANK # 241-AP-108 17-54Deg | RISER I.D. 17@54Deg | VIDEO TAPE I.D. # AP-15 |
|---|---|---|---|
| Completed RD /3-17-92/11:00AM | OUTSIDE WALL OF THE PRIMARY TANK | | |
| Completed RD /3-17-92/11:00AM | INSIDE WALL OF THE SECONDARY TANK | | |
| Completed RD /3-17-92/11:00AM | PRIMARY TANK UPPER/LOWER KNUCKLE AREA | | |
| Completed RD /3-17-92/11:00AM | SECONDARY UPPER/LOWER KNUCKLE AREA | | |
| Completed RD /3-17-92/11:00AM | CONCRETE EDGE BELOW THE PRIMARY TANK | | |
| Completed RD /3-17-92/11:00AM | ALL WELDS | | |
| Completed RD /3-17-92/11:00AM | ANNULUS FLOOR | | |
| Completed RD /3-17-92/11:00AM | EXIT OPENING OF THE SLOTS IN THE INSULATING CONCRETE UNDER THE PRIMARY TANK | | |
| | | | |

9413147.0242

9413147.0243

AREAS OF INTEREST EXAMINATION VERIFICATION CHECK SHEET

| INITIAL/DATE/TIME | TANK # 241-AP-108 -17-236 Deg | RISER I.D. 17 @ 236 Deg | VIDEO TAPE I.D. # AP-16 |
|---|---|---|---|
| Completed DLP 3-18-92 / 10:30 AM | OUTSIDE WALL OF THE PRIMARY TANK | | |
| Completed DLP 3-18-92/10:30 AM | INSIDE WALL OF THE SECONDARY TANK | | |
| Completed DLP 3-18-92/10:30 AM | PRIMARY TANK UPPER/LOWER KNUCKLE AREA | | |
| Completed DLP 3-18-92/10:30 AM | SECONDARY UPPER/LOWER KNUCKLE AREA | | |
| Completed DLP 3-18-92/10:30 AM | CONCRETE EDGE BELOW THE PRIMARY TANK | | |
| Completed DLP 3-18-92/10:30 AM | ALL WELDS | | |
| Completed DLP 3-18-92/10:30 AM | ANNULUS FLOOR | | |
| Completed DLP 3-18-92/10:30 AM | EXIT OPENING OF THE SLOTS IN THE INSULATING CONCRETE UNDER THE PRIMARY TANK | | |
| | | | |

ATTACHMENT 2

Photograph, Annulus, Tank 241-SY-101

9413147.0244

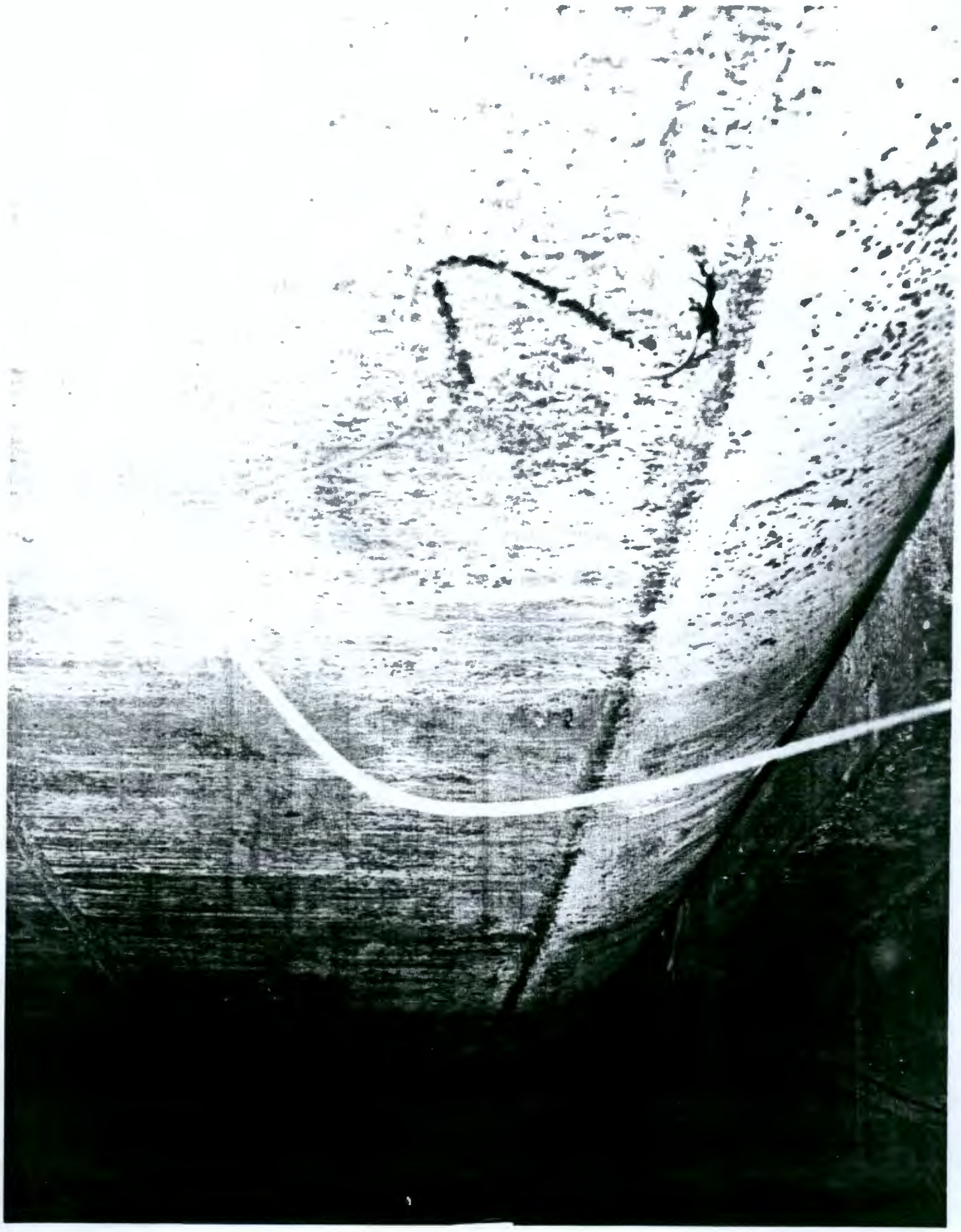

9413147.0245

# ATTACHMENT 3

## Examination Photographs

9413147.0246

02/2
:28
241-
4DEG
AZMTH -112 DEG
DEPTH 636 INCH
TILT -15 DEG

ATTACHMENT 4

Video Review Record - Doubles-Shell Tank Annulus
241-AP Tanks

9413147.0248

# Video Review Record - Double-Shell Tank Annulus

Review Date: 03/25/93

Tank Number: 241-AP-101-17-54° Inspection Date: 02/10/92 Tape Number: 1

Reviewer: J. Harris (Print/Signature)

| Tape Time | | VCR | Complementary Information | | | Reviewer Comments |
|---|---|---|---|---|---|---|
| Hr | Min | Time (Min-Sec) | Azim. (Deg.) | Depth (in.) | Tilt (Deg.) | |
| 9 | 50 | 25 | 0 | 300 | 65 | Start |
| 10 | 11 | 10 | -141 | 300 | 85 | Water lines on haunch of sec liner |
| | | | | 300 | | End |
| 10 | 33 | 05 | 0 | 348 | -87 | Start |
| 10 | 42 | 14 | 100 | 348 | 48 | Pore like Indications |
| 10 | 54 | 48 | | 348 | | End |
| 10 | 59 | 21 | 0 | 396 | -88 | Start |
| 10 | 59 | 43 | 0 | 396 | -28 | Heavy rust spot on sec liner |
| 11 | 01 | 33 | -3 | 396 | -20 | Zoom in |
| 11 | 02 | 32 | -4 | 396 | -20 | Zoom in more linear indication in rust spot |
| 13 | 17 | 59 | | 396 | | End |
| 13 | 24 | 02 | -1 | 444 | -48 | Start picture quality is very poor |
| 13 | 49 | 39 | -240 | 444 | 10 | Heavy rust scale sec liner |
| 13 | 50 | 25 | | 444 | | End |
| 14 | 02 | 30 | -4 | 492 | 38 | Start |
| 14 | 27 | 22 | | 492 | | End |

# Video Review Record - Double-Shell Tank Annulus

Review Date: 03/25/93

Tank Number: 241-AP-101-17-54° Inspection Date: 02/10/92 Tape Number: 1

Reviewer: J. Harris (Print/Signature)

| Tape Time | | VCR | Complementary Information | | | Reviewer Comments |
|---|---|---|---|---|---|---|
| Hr | Min | Time (Min-Sec) | Azim. (Deg.) | Depth (in.) | Tilt (Deg.) | |
| 14 | 32 | 41 | 0 | 540 | -87 | Start |
| 14 | 34 | 00 | 0 | 540 | 29 | Heavy rust secondary liner |
| 14 | 39 | 45 | -80 | 540 | -52 | Vertical linear indication primary tank |
| 14 | 52 | 00 | | 540 | | End |
| 14 | 56 | 30 | 0 | 588 | -70 | Start |
| 15 | 11 | | | 588 | | End |
| 15 | 13 | | 0 | 588 | | Start - depth should be 636 |
| 15 | 16 | 32 | | 588 | | End - depth should be 636 |

# Video Review Record - Double-Shell Tank Annulus

Review Date: 03/31/93

Tank Number: 241-AP-101-17-236° Inspection Date: 02/11/92 Tape Number: 2

Reviewer: J. Harris/ (Print/Signature)

| Tape Time | | VCR | Complementary Information | | | Reviewer Comments |
|---|---|---|---|---|---|---|
| Hr | Min | Time (Min-Sec) | Azim. (Deg.) | Depth (in.) | Tilt (Deg.) | |
| 9 | 51 | 25 | 0 | 300 | -90 | Start |
| 10 | 15 | 04 | | 300 | | End |
| 10 | 20 | 28 | 0 | 348 | -90 | Start |
| 10 | 44 | 42 | | 348 | | End |
| 10 | 53 | 48 | 0 | 396 | -83 | Start |
| 11 | 09 | 43 | | 396 | | End |
| 13 | 25 | 27 | 0 | 444 | -85 | Start |
| 13 | 43 | 02 | | 444 | | End |
| 13 | 56 | 33 | 0 | 492 | -83 | Start |
| 14 | 11 | 25 | | 492 | | End |
| 14 | 14 | 25 | 0 | 540 | -88 | Start |
| 14 | 27 | 34 | | 540 | | End |
| 14 | 30 | 29 | 0 | 588 | -89 | Start |
| 14 | 45 | 27 | -135 | 588 | -90 | Zoom in to annulus floor looks like heavy pit corrosion or heavy layer of flaked fallen mill scale |
| 14 | 46 | 14 | | 588 | | End |
| 14 | 46 | 14 | -90 | 635 | -89 | Start |

# Video Review Record - Double-Shell Tank Annulus

Review Date: 03/31/93

Tank Number: 241-AP-101-17-236° Inspection Date: 02/11/92 Tape Number: 2

Reviewer: J. Harris/ (Print/Signature)

| Tape Time | | VCR | Complementary Information | | | Reviewer Comments |
|---|---|---|---|---|---|---|
| Hr | Min | Time (Min-Sec) | Azim. (Deg.) | Depth (in.) | Tilt (Deg.) | |
| 14 | 53 | 25 | -60 | 636 | -31 | Outside surface of ring steel deeply corroded in three locations |
| 15 | 11 | 56 | | 636 | | End |

# Video Review Record - Double-Shell Tank Annulus

Review Date: 04/01/93

Tank Number: 241-AP-102-17-236 Inspection Date: 02/13/92 Tape Number: 3

Reviewer: J. Harris (Print/Signature)

| Tape Time | | VCR | Complementary Information | | | Reviewer Comments |
|---|---|---|---|---|---|---|
| Hr | Min | Time (Min-Sec) | Azim. (Deg.) | Depth (in.) | Tilt (Deg.) | |
| 09 | 32 | 30 | -1 | 300 | -81 | Start |
| 90 | 40 | 58 | -19 | 300 | 11 | Heavy rust scale area on outer wall |
| 10 | 49 | 27 | | 300 | | End |
| 10 | 55 | 08 | 0 | 348 | -65 | Start |
| 13 | 36 | 29 | | 348 | | End |
| 13 | 42 | 59 | 0 | 396 | -89 | Start |
| 13 | 58 | 30 | | 396 | | End |
| 14 | 01 | 55 | 0 | 444 | -89 | Start |
| 14 | 16 | 41 | | 444 | | End |
| 14 | 24 | 23 | 0 | 492 | -77 | Start |
| 09 | 55 | 04 | | 492 | | End |
| 09 | 58 | 04 | 0 | 540 | -65 | Start |
| 10 | 21 | 27 | 1 | 540 | -12 | Heavy rust spot on outer wall |
| 10 | 26 | 25 | -100 | xxx | 71 | Depth corrected to 588 |
| 10 | 37 | 29 | | 588 | | End |
| 10 | 43 | 33 | 0 | 630 | -19 | Start |

# Video Review Record - Double-Shell Tank Annulus

Review Date: 04/01/93

Tank Number: 241-AP-102-17-236 Inspection Date: 02/13/92 Tape Number: 3

Reviewer: J. Harris/ _____ (Print/Signature)

| Tape Time | | VCR | Complementary Information | | | Reviewer Comments |
|---|---|---|---|---|---|---|
| Hr | Min | Time (Min-Sec) | Azim. (Deg.) | Depth (in.) | Tilt (Deg.) | |
| 10 | 45 | 18 | -38 | 630 | -14 | Indication on pipe transverse |
| 10 | 46 | 19 | -42 | 630 | -12 | Pipe entering ring lower has coating/wrapping missing on underside |
| 10 | 46 | 19 | -42 | 630 | -12 | End |

# Video Review Record - Double-Shell Tank Annulus

Review Date: 06/07/93

Tank Number: 241-AP-102-17-54* Inspection Date: 02/14/92 Tape Number: 4

Reviewer: J. Harris/ [signature] (Print/Signature)

| Tape Time | | VCR | Complementary Information | | | Reviewer Comments |
|---|---|---|---|---|---|---|
| Hr | Min | Time (Min-Sec) | Azim. (Deg.) | Depth (in.) | Tilt (Deg.) | |
| 14 | 30 | 00 | 0 | 300 | 82 | Start |
| 14 | 31 | 35 | -187 | 300 | 84 | Rust area sec wall haunch probably caused from rain on subassembly before installation |
| 14 | 46 | 55 | | 300 | | End |
| 14 | 06 | 32 | 2 | 348 | -66 | Start |
| 14 | 18 | 38 | | 348 | | End |
| 14 | 38 | 44 | 0 | 348 | -52 | Start |
| 14 | 48 | 30 | | 396 | | Depth correction made |
| 14 | 51 | 40 | | 396 | | End |
| 14 | 54 | 51 | 0 | 444 | -66 | Start |
| 15 | 04 | 48 | | 444 | | End |
| 09 | 22 | 01 | 0 | 492 | -67 | Start |
| 9 | 38 | 28 | | 492 | | End |
| 9 | 43 | 37 | -1 | 540 | -63 | Start |
| 9 | 58 | 11 | | 540 | | End |
| 10 | 3 | 9 | 0 | 588 | -89 | Start |
| 10 | 27 | 36 | | 588 | | End |

# Video Review Record - Double-Shell Tank Annulus

Review Date: 06/07/93

Tank Number: 241-AP-102-17-54° Inspection Date: 02/14/92 Tape Number: 4

Reviewer: J. Harris/ (Print/Signature)

| Tape Time | | VCR | Complementary Information | | | Reviewer Comments |
|---|---|---|---|---|---|---|
| Hr | Min | Time (Min-Sec) | Azim. (Deg.) | Depth (in.) | Tilt (Deg.) | |
| 10 | 34 | 24 | 0 | 636 | -16 | Start |
| 10 | 35 | 20 | -84 | 636 | 2 | Pit corrosion indications on lower knuckle of primary wall |
| 10 | 37 | 27 | | 636 | | End |

# Video Review Record - Double-Shell Tank Annulus

Review Date: 06/08/93

Tank Number: 241-AP-103-17-54° Inspection Date: 02/19/92 Tape Number: 5

Reviewer: J. Harris/ (Print/Signature)

| Tape Time | | VCR | Complementary Information | | | Reviewer Comments |
|---|---|---|---|---|---|---|
| Hr | Min | Time (Min-Sec) | Azim. (Deg.) | Depth (in.) | Tilt (Deg.) | |
| 1 | 41 | 52 | 0 | 300 | -85 | Start |
| 1 | 57 | 33 | -190 | 300 | 85 | Rust residue from subassenmbly |
| 2 | 0 | 8 | | 300 | | End |
| 2 | 6 | 55 | 0 | 348 | -89 | Start |
| 2 | 20 | 04 | -240 | 348 | -69 | Heavy rust spot on secondary wall area incircled |
| 2 | 21 | 11 | | 348 | | End |
| 2 | 23 | 08 | 0 | 396 | -82 | Start |
| 2 | 36 | 38 | | 396 | | End |
| 2 | 38 | 32 | 0 | 444 | -89 | Start |
| 2 | 54 | 57 | | 444 | | End |
| 1 | 50 | 30 | 0 | 492 | -59 | Start |
| 2 | 2 | 53 | | 492 | | End |
| 2 | 5 | 15 | 0 | 540 | -89 | Start |
| 2 | 18 | 39 | | 540 | | End |
| 2 | 22 | 54 | -148 | 588 | -78 | Start |
| 2 | 23 | 53 | 0 | 588 | -87 | Start (Previous entry was false start) |

# Video Review Record - Double-Shell Tank Annulus

Review Date: 06/08/93

Tank Number: 241-AP-103-17-54° Inspection Date: 02/19/92 Tape Number: 5

Reviewer: J. Harris/ (Print/Signature)

| Tape Time | | VCR | Complementary Information | | | Reviewer Comments |
|---|---|---|---|---|---|---|
| Hr | Min | Time (Min-Sec) | Azim. (Deg.) | Depth (in.) | Tilt (Deg.) | |
| 2 | 29 | 52 | -160 | 588 | -51 | Indication lower right corner of screen directly below "4-H" |
| 2 | 34 | 6 | | 588 | | End |
| 2 | 37 | 12 | 0 | 636 | -2 | Start |
| 2 | 40 | 43 | 200 | 636 | -10 | Horizontal pipe extending from ring has odd projection extending from it (camera zoom in) |
| 2 | 40 | 47 | | 636 | | End |

# Video Review Record - Double-Shell Tank Annulus

Review Date: 06/08/93

Tank Number: 241-AP-103-17-236° Inspection Date: 01/21/92 Tape Number: 6

Reviewer: J. Harris/ (Print/Signature)

| Tape Time | | VCR | Complementary Information | | | Reviewer Comments |
|---|---|---|---|---|---|---|
| Hr | Min | Time (Min-Sec) | Azim. (Deg.) | Depth (in.) | Tilt (Deg.) | |
| 9 | 54 | 36 | 0 | 300 | -57 | Start |
| 10 | 7 | 26 | | 300 | | End |
| 10 | 13 | 14 | 0 | 348 | -90 | Start |
| 10 | 24 | 45 | | 348 | | End |
| 10 | 26 | 22 | -240 | 396 | -89 | Start |
| 10 | 39 | 19 | | 396 | | End |
| 10 | 40 | 56 | 0 | 444 | -90 | Start |
| 10 | 54 | 46 | | 444 | | End |
| 13 | 4 | 5 | 0 | 492 | -61 | Start |
| 13 | 15 | 53 | | 492 | | End |
| 13 | 18 | 9 | 1 | 540 | -89 | Start |
| 13 | 30 | 22 | | 540 | | End |
| 13 | 35 | 04 | 0 | 588 | -88 | Start |
| 13 | 56 | 10 | | 588 | | End |
| 14 | 02 | 59 | 0 | 636 | 0 | Start |
| 14 | 05 | 05 | -121 | 636 | -12 | Weld rod stub |

# Video Review Record - Double-Shell Tank Annulus

Review Date: 06/08/93

Tank Number: 241-AP-103-17-236° Inspection Date: 01/21/92 Tape Number: 6

Reviewer: J. Harris/ (Print/Signature)

| Tape Time | | VCR | Complementary Information | | | Reviewer Comments |
|---|---|---|---|---|---|---|
| Hr | Min | Time (Min-Sec) | Azim. (Deg.) | Depth (in.) | Tilt (Deg.) | |
| 14 | 06 | 44 | | 636 | | End |

# Video Review Record - Double-Shell Tank Annulus

Review Date: 06/21/93

Tank Number: 241-AP-104-17-54° Inspection Date: 02/24/92 Tape Number: 7

Reviewer: J. Harris/ (Print/Signature)

| Tape Time | | VCR | Complementary Information | | | Reviewer Comments |
|---|---|---|---|---|---|---|
| Hr | Min | Time (Min-Sec) | Azim. (Deg.) | Depth (in.) | Tilt (Deg.) | |
| 9 | 16 | 20 | 0 | 300 | -50 | Start |
| 9 | 30 | 25 | | 300 | | End |
| 9 | 47 | 48 | -1 | 348 | -68 | Start |
| 10 | 0 | 42 | | 348 | | End |
| 10 | 3 | 45 | 0 | 396 | -88 | Start |
| 10 | 16 | 40 | | 396 | | End |
| 10 | 19 | 42 | 0 | 444 | -74 | Start |
| 10 | 33 | 14 | | 444 | | End |
| 10 | 38 | 27 | 0 | 492 | -89 | Start |
| 10 | 51 | 22 | | | | End |
| 10 | 53 | 59 | 0 | 540 | -89 | Start |
| 11 | 05 | 22 | | 492 | | End |
| 12 | 49 | 48 | 0 | 588 | -85 | Start |
| 12 | 53 | 41 | 80 | 588 | -54 | Pipe 4" entering base ring has indication |
| 13 | 04 | 55 | | 588 | | End |
| 13 | 09 | 20 | 0 | 636 | 2 | Start |

# Video Review Record - Double-Shell Tank Annulus

Review Date: 06/21/93

Tank Number: 241-AP-104-17-54° Inspection Date: 02/24/92 Tape Number: 7

Reviewer: J. Harris/ (Print/Signature)

| Tape Time | | VCR | Complementary Information | | | Reviewer Comments |
|---|---|---|---|---|---|---|
| Hr | Min | Time (Min-Sec) | Azim. (Deg.) | Depth (in.) | Tilt (Deg.) | |
| 13 | 09 | 50 | -54 | 636 | -13 | ≈4" pipe entering base ring has unidentifiable cond. appears like peeling |
| 13 | 15 | 29 | -54 | 636 | -13 | End |

# Video Review Record - Double-Shell Tank Annulus

Review Date: 07/07/93

Tank Number: 241-AP-104-17-236° Inspection Date: 02/25/93 Tape Number: 8

Reviewer: J. Harris/ (Print/Signature)

| Tape Time | | VCR | Complementary Information | | | Reviewer Comments |
|---|---|---|---|---|---|---|
| Hr | Min | Time (Min-Sec) | Azim. (Deg.) | Depth (in.) | Tilt (Deg.) | |
| 02 | 23 | 38 | 0 | 300 | -86 | Start |
| 02 | 29 | 49 | -120 | 300 | -53 | Weld profile (horz inner tank) irregular |
| 02 | 31 | 39 | -140 | 300 | -49 | Weld profile (horz inner tank) irregular |
| 02 | 38 | 31 | | 300 | | End |
| 02 | 43 | 57 | 0 | 348 | -68 | Start |
| 2 | 58 | 59 | | 348 | | End |
| 8 | 49 | 06 | 0 | 396 | -52 | Start |
| 8 | 37 | 23 | -180 | 396 | -12 | None overlap example |
| 8 | 38 | 12 | -200 | 396 | -13 | None overlap example |
| 9 | 1 | 32 | | 396 | | End |
| 9 | 5 | 07 | 0 | 444 | -67 | Start |
| 9 | 20 | 05 | -239 | 444 | 70 | Sec. wall-heavy rust area concentrated (poor lighting missed this completely on first pass) |
| 9 | 20 | 15 | | 444 | | End |
| 9 | 27 | 30 | 0 | 492 | -60 | Start |
| 9 | 42 | 47 | | 492 | | End |
| 9 | 45 | 32 | 0 | 540 | -63 | Start |

# Video Review Record - Double-Shell Tank Annulus

Review Date: 07/07/93

Tank Number: 241-AP-104-17-236° Inspection Date: 02/25/93 Tape Number: 8

Reviewer: J. Harris/ (Print/Signature)

| Tape Time | | VCR | Complementary Information | | | Reviewer Comments |
|---|---|---|---|---|---|---|
| Hr | Min | Time (Min-Sec) | Azim. (Deg.) | Depth (in.) | Tilt (Deg.) | |
| 10 | 01 | 31 | | 540 | | End |
| 10 | 05 | 40 | 0 | 588 | -88 | Start |
| 10 | 20 | 47 | | 588 | | End |
| 10 | 26 | 27 | 4 | 636 | -3 | Start |
| 10 | 26 | 50 | -42 | 636 | -10 | 4" pipe has a partially peeled wrapping type material hanging from bottom of pipe. This explains earlier sitings on simular pipe |
| 10 | 31 | 04 | | 636 | | End |

# Video Review Record - Double-Shell Tank Annulus

Review Date: 07/08/93

Tank Number: 241-AP-105-17-54° Inspection Date: 02/27/92 Tape Number: 9

Reviewer: J. Harris/ (Print/Signature)

| Tape Time | | VCR | Complementary Information | | | Reviewer Comments |
|---|---|---|---|---|---|---|
| Hr | Min | Time (Min-Sec) | Azim. (Deg.) | Depth (in.) | Tilt (Deg.) | |
| 13 | 14 | 37 | 0 | 300 | -87 | Start |
| 13 | 29 | 55 | | 300 | | End |
| 13 | 35 | 30 | 0 | 348 | -66 | Start |
| 13 | 48 | 04 | | 348 | | End |
| 13 | 49 | 56 | 2 | 396 | -69 | Start |
| 14 | 15 | 00 | | 396 | | End |
| 14 | 17 | 19 | 0 | 444 | -72 | Start |
| 14 | 29 | 55 | | 444 | | End |
| 14 | 34 | 57 | 0 | 492 | -89 | Start |
| 14 | 48 | 15 | | 492 | | End |
| 14 | 49 | 49 | 0 | 540 | -63 | Start |
| 15 | 02 | 42 | | 540 | | End |
| 09 | 09 | 53 | 0 | 588 | -86 | Start |
| 09 | 25 | 21 | | 588 | | End |
| 09 | 30 | 27 | 0 | 636 | -9 | Start |
| 09 | 31 | 28 | -112 | 636 | -15 | Cracks in insulation concrete |

# Video Review Record - Double-Shell Tank Annulus

Review Date: 07/08/93

Tank Number: 241-AP-105-17-54* Inspection Date: 02/27/92 Tape Number: 9

Reviewer: J. Harris/ (Print/Signature)

| Tape Time | | VCR | Complementary Information | | | Reviewer Comments |
|---|---|---|---|---|---|---|
| Hr | Min | Time (Min-Sec) | Azim. (Deg.) | Depth (in.) | Tilt (Deg.) | |
| 09 | 38 | 13 | | 636 | | End |

# Video Review Record - Double-Shell Tank Annulus

Review Date: 07/09/93

Tank Number: 241-AP-105-17-236° Inspection Date: 02/28/92 Tape Number: 10

Reviewer: J. Harris (Print/Signature)

| Tape Time | | VCR | Complementary Information | | | Reviewer Comments |
|---|---|---|---|---|---|---|
| Hr | Min | Time (Min-Sec) | Azim. (Deg.) | Depth (in.) | Tilt (Deg.) | |
| 10 | 37 | 30 | 0 | 300 | -82 | Start |
| 10 | 42 | 17 | -206 | 300 | 41 | Zoom in-looks like tape on inner wall |
| 10 | 45 | 22 | | 300 | | End |
| 10 | 49 | 17 | 0 | 348 | -87 | Start |
| 10 | 57 | 29 | -180 | 348 | -29 | Lack of complete view |
| 10 | 58 | 20 | -200 | 348 | -3 | Lack of complete view |
| 11 | 01 | 02 | | 348 | | End |
| 12 | 48 | 43 | 0 | 396 | -69 | Start |
| 13 | 0 | 20 | -260 | 396 | | End |
| 13 | 02 | 07 | 0 | 444 | -79 | Start |
| 13 | 18 | 32 | -260 | 444 | | End |
| 13 | 22 | 40 | 0 | 492 | -80 | Start |
| 13 | 33 | 56 | -160 | 492 | -36 | Several pits |
| 13 | 39 | 45 | | 492 | | End |
| 13 | 41 | 47 | 0 | 540 | -90 | Start |
| 13 | 54 | 09 | -260 | 540 | 14 | Outer wall, base of horz. weld, streaming of white residue possible construction mark, dark spot similar to other areas in vicinity. |

# Video Review Record - Double-Shell Tank Annulus

Review Date: 07/09/93

Tank Number: 241-AP-105-17-236° Inspection Date: 02/28/92 Tape Number: 10

Reviewer: J. Harris/ (Print/Signature)

| Tape Time | | VCR | Complementary Information | | | Reviewer Comments |
|---|---|---|---|---|---|---|
| Hr | Min | Time (Min-Sec) | Azim. (Deg.) | Depth (in.) | Tilt (Deg.) | |
| 13 | 54 | 31 | | 540 | | End |
| 13 | 57 | 28 | 0 | 588 | -90 | Start |
| 14 | 15 | 50 | | 588 | | End |
| 14 | 18 | 56 | 0 | 636 | 13 | Start |
| 14 | 22 | 10 | -130 | 636 | -16 | Zoom in on airpassage way showing some insulating concret chips in passage way |
| 14 | 24 | 41 | | 636 | | End |

# Video Review Record - Double-Shell Tank Annulus

Review Date: 07/13/93

Tank Number: 241-AP-106-17-54° Inspection Date: 03/02/92 Tape Number: 11

Reviewer: J. Harris/ (Print/Signature)

| Tape Time | | VCR | Complementary Information | | | Reviewer Comments |
|---|---|---|---|---|---|---|
| Hr | Min | Time (Min-Sec) | Azim. (Deg.) | Depth (in.) | Tilt (Deg.) | |
| 12 | 59 | 27 | 0 | 300 | -64 | Start |
| 13 | 13 | 16 | | 300 | | End |
| 13 | 17 | 42 | 0 | 347 | -69 | Start |
| 13 | 31 | 18 | | 347 | | End |
| 13 | 33 | 59 | 0 | 396 | -66 | Start |
| 13 | 47 | 36 | -260 | 396 | | End |
| 13 | 50 | 41 | 0 | 442 | -77 | Start |
| 14 | 04 | 50 | -260 | 442 | | End |
| 14 | 09 | 22 | 0 | 492 | -66 | Start |
| 14 | 22 | 46 | | 492 | | End |
| 14 | 25 | 06 | 0 | 540 | -65 | Start |
| 14 | 36 | 01 | | 540 | | End |
| 14 | 40 | 12 | 0 | 588 | -90 | Start |
| 14 | 53 | 29 | | 588 | | End |
| 14 | 56 | 04 | -7 | 636 | 14 | Start |
| 15 | 00 | 30 | | 636 | | End |

# Video Review Record - Double-Shell Tank Annulus

Review Date: 07/14/93

Tank Number: 241-AP-106-17-236° Inspection Date: 03/03/92 Tape Number: 12

Reviewer: J. Harris/ (Print/Signature)

| Tape Time | | VCR | Complementary Information | | | Reviewer Comments |
|---|---|---|---|---|---|---|
| Hr | Min | Time (Min-Sec) | Azim. (Deg.) | Depth (in.) | Tilt (Deg.) | |
| 10 | 36 | 08 | 0 | 300 | -86 | Start |
| 10 | 55 | 14 | | 300 | | End |
| 12 | 50 | 25 | 0 | 348 | -71 | Start |
| 13 | 04 | 11 | -260 | 348 | | End |
| 13 | 6 | 26 | 0 | 396 | -84 | Start |
| 13 | 18 | 37 | -260 | 396 | | End |
| 13 | 27 | 19 | 0 | 444 | -89 | Start |
| 13 | 34 | 01 | | 444 | | End |
| 13 | 39 | 35 | 0 | 492 | -90 | Start |
| 13 | 51 | 41 | | 492 | | End |
| 13 | 54 | 25 | 0 | 540 | -89 | Start |
| 14 | 13 | 53 | | 540 | | End |
| 14 | 20 | 04 | 0 | 588 | -90 | Start |
| 14 | 40 | 35 | | 588 | | End |
| 14 | 45 | 06 | 07 | 636 | -1 | Start |
| 14 | 50 | 44 | | 636 | | End |

# Video Review Record - Double-Shell Tank Annulus

Review Date: 07/15/93

Tank Number: 241-AP-106-17-54° Inspection Date: 03/40/92 Tape Number: 13

Reviewer: J. Harris/ (Print/Signature)

| Tape Time | | VCR | Complementary Information | | | Reviewer Comments |
|---|---|---|---|---|---|---|
| Hr | Min | Time (Min-Sec) | Azim. (Deg.) | Depth (in.) | Tilt (Deg.) | |
| 09 | 34 | 37 | -1 | 300 | -73 | Start |
| 09 | 50 | 23 | | 300 | | End |
| 09 | 54 | 51 | 0 | 348 | -68 | Start |
| 10 | 07 | | -161 | 348 | -40 | Appears like multiple pitting |
| 10 | 13 | 42 | | 348 | | End |
| 10 | 16 | 27 | 0 | 396 | -76 | Start |
| 10 | 31 | 25 | -260 | 396 | | End |
| 10 | 33 | 52 | 0 | 444 | -67 | Start |
| 10 | 50 | 12 | | 444 | | End |
| 12 | 47 | 05 | 0 | 492 | -36 | Start |
| 12 | 59 | 54 | -165 | 492 | 64 | Unexplained transverse irr. indication |
| 13 | 05 | 52 | | 492 | | End |
| 13 | 08 | 23 | 0 | 540 | -71 | Start |
| 13 | 21 | 19 | | 540 | | End |
| 13 | 41 | 13 | 0 | 588 | -89 | Start |
| 14 | 02 | 15 | | 588 | | End |

# Video Review Record - Double-Shell Tank Annulus

Review Date: 07/15/93

Tank Number: 241-AP-106-17-54* Inspection Date: 03/40/92 Tape Number: 13

Reviewer: J. Harris/ (Print/Signature)

| Tape Time | | VCR | Complementary Information | | | Reviewer Comments |
|---|---|---|---|---|---|---|
| Hr | Min | Time (Min-Sec) | Azim. (Deg.) | Depth (in.) | Tilt (Deg.) | |
| 14 | 06 | 25 | 0 | 636 | -3 | Start |
| 14 | 12 | 16 | | 636 | | End |

# Video Review Record - Double-Shell Tank Annulus

Review Date: 07/16/93

Tank Number: 241-AP-107-17-236° Inspection Date: 03/06/92 Tape Number: 14

Reviewer: J. Harris (Print/Signature)

| Tape Time | | VCR | Complementary Information | | | Reviewer Comments |
|---|---|---|---|---|---|---|
| Hr | Min | Time (Min-Sec) | Azim. (Deg.) | Depth (in.) | Tilt (Deg.) | |
| 09 | 12 | 35 | 0 | 300 | -70 | Start |
| 09 | 27 | 29 | | 300 | | End |
| 09 | 31 | 29 | 0 | 348 | -81 | Start |
| 09 | 47 | 11 | | 348 | | End |
| 09 | 50 | 04 | 0 | 396 | -84 | Start |
| 10 | 04 | 27 | -260 | 396 | | End |
| 10 | 06 | 36 | 0 | 444 | -78 | Start |
| 10 | 21 | 00 | | 444 | | End |
| 10 | 24 | 55 | 0 | 492 | -88 | Start |
| 10 | 44 | 05 | | 492 | | End |
| 10 | 48 | 22 | 0 | 540 | -64 | Start |
| 10 | 53 | 37 | -119 | 540 | 75 | Multiple corrosion sites more numerous than normal |
| 11 | 00 | 04 | | 540 | | End |
| 09 | 28 | 41 | 0 | 587 | -90 | Start |
| 09 | 48 | 17 | | 587 | | End |
| 09 | 52 | 16 | 0 | 636 | -1 | Start |

# Video Review Record - Double-Shell Tank Annulus

Review Date: 07/16/93

Tank Number: 241-AP-107-17-236° Inspection Date: 03/06/92 Tape Number: 14

Reviewer: J. Harris/ (Print/Signature)

| Tape Time | | VCR | Complementary Information | | | Reviewer Comments |
|---|---|---|---|---|---|---|
| Hr | Min | Time (Min-Sec) | Azim. (Deg.) | Depth (in.) | Tilt (Deg.) | |
| 09 | 57 | 22 | -55 | 636 | -15 | Melted debris partially coating 4" air intake pipe |
| 09 | 58 | 00 | | 636 | | End |

# Video Review Record - Double-Shell Tank Annulus

Review Date: 07/19/93

Tank Number: 241-AP-108-17-54° Inspection Date: 03/17/92 Tape Number: 15

Reviewer: J. Harris (Print/Signature)

| Tape Time | | VCR | Complementary Information | | | Reviewer Comments |
|---|---|---|---|---|---|---|
| Hr | Min | Time (Min-Sec) | Azim. (Deg.) | Depth (in.) | Tilt (Deg.) | |
| 10 | 41 | 55 | 0 | 300 | -72 | Start |
| 10 | 58 | 01 | | 300 | | End |
| 11 | 04 | 16 | 0 | 348 | -66 | Start |
| 02 | 47 | 05 | -260 | 348 | | End |
| 09 | 16 | 22 | 0 | 396 | -53 | Start |
| 09 | 29 | 12 | | 396 | | End |
| 09 | 35 | 29 | 0 | 444 | -72 | Start |
| 09 | 51 | 18 | | 444 | | End |
| 09 | 55 | 22 | 0 | 492 | -63 | Start |
| 09 | 59 | 31 | -8 | 492 | -41 | Horz linear indication-irr. hair line |
| 10 | 11 | 13 | | 492 | | End |
| 10 | 13 | 23 | 0 | 540 | -80 | Start |
| 10 | 26 | 59 | | 540 | | End |
| 10 | 31 | 00 | 0 | 588 | -90 | Start |
| 10 | 48 | 29 | | 588 | | End |
| 10 | 52 | 50 | -2 | 636 | 68 | Start |
| 10 | 58 | 12 | | 636 | | End |

# Video Review Record - Double-Shell Tank Annulus

Review Date: 07/19/93

Tank Number: 241-AP-108-17-236° Inspection Date: 03/17/92 Tape Number: 16

Reviewer: J. Harris/ (Print/Signature)

| Tape Time | | VCR | Complementary Information | | | Reviewer Comments |
|---|---|---|---|---|---|---|
| Hr | Min | Time (Min-Sec) | Azim. (Deg.) | Depth (in.) | Tilt (Deg.) | |
| 01 | 56 | 19 | 0 | 300 | -68 | Start |
| 02 | 12 | 36 | | 300 | | End |
| 02 | 17 | 38 | 0 | 348 | -56 | Start |
| 02 | 31 | 40 | | 348 | | End |
| 02 | 33 | 13 | -2 | 396 | -89 | Start |
| 02 | 48 | 17 | | 396 | | End |
| 02 | 50 | 48 | -2 | 444 | -85 | Start |
| 03 | 0 | 45 | | 444 | | End |
| 09 | 06 | 26 | 0 | 492 | -73 | Start |
| 09 | 21 | 36 | -260 | 492 | | End |
| 09 | 23 | 49 | 0 | 540 | -86 | Start |
| 09 | 39 | 11 | | 540 | | End |
| 09 | 44 | 08 | 0 | 588 | -90 | Start |
| 10 | 09 | 56 | -260 | 588 | | End |
| 10 | 15 | 28 | -3 | 636 | 34 | Start |
| 10 | 22 | 34 | | 636 | | End |

# DISTRIBUTION SHEET

WHC-SD-WM-RPT-078
REV. 0

To: Tank Farms Technical Assessments

From: System Structural Integrity Assessments

Date: Sept. 1993

Project Title/Work Order:

VISUAL EXAMINATION REPORT FOR TANK ANNULI AT THE 241-AY/AZ TANK FARM

EDT No.: 140991

ECN No.:

| Name | MSIN | With Attachment | EDT/ECN & Comment | EDT/ECN Only |
|---|---|---|---|---|
| L. D. Blackburn | H5-67 | X | | |
| W. C. Carlos | H5-52 | X | | |
| R. A. Dodd | R1-51 | X | | |
| D. J. Green | H5-53 | X | | |
| J. Harris (5) | H5-52 | X | | |
| J. P. Hauptmann | S2-03 | X | | |
| R. Malhan | S1-57 | X | | |
| V. D. Maupin | R1-51 | X | | |
| M. A. McLaughlin | H5-34 | X | | |
| D. C. Pfluger | H5-52 | X | | |
| R. S. Popielarcyk | R1-30 | X | | |
| D. L. Powell Jr. | L6-13 | X | | |
| L. Ruffin | R2-95 | X | | |
| E. B. Schwenk | H5-52 | X | | |
| K. V. Scott | H5-52 | X | | |
| D. B. Smet | X5-52 | X | | |
| J. D. Thomson | R1-30 | | | X |
| F. R. Vollert | H5-09 | X | | |
| E. J. Walter | H5-52 | X | | |
| Central Files (Orig. + 3 copies) | L8-04 | X | | |
| ~~Station 21~~ | ~~H5-51~~ | | | ~~X~~ |
| ~~IRA Clearance~~ | ~~H4-17~~ | ~~X~~ | | |

9413147.0277

Date Received: 9/22/93

# INFORMATION RELEASE REQUEST

Reference: WHC-CM-3-4

Complete for all Types of Release

**Purpose**

[] Speech or Presentation
- [] Full Paper
- [] Summary
- [] Abstract
- [] Visual Aid

(Check only one suffix)

[] Speakers Bureau
[] Poster Session
[] Videotape

[] Reference
[X] Technical Report
[] Thesis or Dissertation
[] Manual
[] Brochure/Flier
[] Software/Database
[] Controlled Document
[] Other

ID Number (include revision, volume, etc.) WHC-SD-WM-RPT-078, Rev. 0

List attachments. N/A

Date Release Required 09/20/93

Title VISUAL EXAMINATION REPORT FOR TANK ANNULI AT THE 241-AY/AZ TANK FARM

Unclassified Category UC-

Impact Level N3Q

New or novel (patentable) subject matter? [X] No [] Yes
If "Yes", has disclosure been submitted by WHC or other company?
[] No [] Yes Disclosure No(s).

Information received from others in confidence, such as proprietary data, trade secrets, and/or inventions?
[X] No [] Yes (Identify)

Copyrights? [X] No [] Yes
If "Yes", has written permission been granted?
[] No [] Yes (Attach Permission)

Trademarks?
[] No [X] Yes (Identify) Kodak (pg. 8)

Complete for Speech or Presentation

Title of Conference or Meeting

Group or Society Sponsoring

Date(s) of Conference or Meeting

City/State

Will proceedings be published? [] Yes [] No
Will material be handed out? [] Yes [] No

Title of Journal

CHECKLIST FOR SIGNATORIES

| Review Required per WHC-CM-3-4 | Yes | No | Reviewer - Signature Indicates Approval: Name (printed) | Signature | Date |
|---|---|---|---|---|---|
| Classification/Unclassified Controlled Nuclear Information | [] | [X] | | | |
| Patent - General Counsel | [X] | [] | SW Berglin | PER OGC MEMO | 2/4/93 |
| Legal - General Counsel | [X] | [] | SW Berglin | PER OGC MEMO | 2/4/93 |
| Applied Technology/Export Controlled Information or International Program | [] | [X] | | | |
| WHC Program/Project | [] | [X] | | | |
| Communications | [] | [X] | | | |
| RL Program/Project | [] | [X] | No Review Required per telecon of Denise | | 9/21/93 |
| Publication Services | [X] | [] | DJ Hastings | per telecon | 9/22/93 |
| Other Program/Project | [] | [X] | | | |

Information conforms to all applicable requirements. The above information is certified to be correct.

| | Yes | No |
|---|---|---|
| References Available to Intended Audience | [X] | [] |
| Transmit to DOE-HQ/Office of Scientific and Technical Information | [] | [X] |

Author/Requestor (Printed/Signature) J. Harris — Date 9/20/93

Intended Audience
[] Internal [] Sponsor [X] External

Responsible Manager (Printed/Signature) K. V. Scott — Date 9/21/93

INFORMATION RELEASE ADMINISTRATION APPROVAL STAMP

Stamp is required before release. Release is contingent upon resolution of mandatory comments.

APPROVED FOR RELEASE — OFFICIAL — NS — 9/22/93

Date Cancelled

Date Disapproved

9413147.0278

BD-7600-062 (08/91) WEF074

Part 1

ID Number WHC-SD-WM-RPT-078, Rev. 0

| Lead Author | Phone | MSIN | Other Author(s) or Requestor |
|---|---|---|---|
| J. Harris | 6-3838 | H5-52 | None |
| **Project or Program** | **Lead Org Code** | | **Sponsor Agency (DOE, DOT, NRC, USGS, etc.)** |
| Tank Farm | 23460 | | DOE |
| **Editor** N. Oblis for per telecon 9/22/93 D. J. Hastings | **Phone** 6-9185 | **MSIN** H6-31 | **DOE/HQ Program (DP, EH, EM, NE, etc.)** EM |

| Mandatory Comments (Only mandatory comments are to be documented. All other comments should be made on a copy of the information submitted for review and returned to the author.) | Reviewer Name & Signature | Date | Resolution | Reviewer Name & Signature | Date |
|---|---|---|---|---|---|
| | | | | | |
| | | | | | |
| | | | | | |
| | | | | | |
| | | | | | |
| | | | | | |
| | | | | | |
| | | | | | |
| | | | | | |
| | | | | | |
| | | | | | |
| | | | | | |
| | | | | | |

Legends/Notices/Markings (required per WHC-CM-3-4 or guidance organization.) (Reviewer initials)

| | Affix Yes | Affix No | | Affix Yes | Affix No |
|---|---|---|---|---|---|
| Applied Technology | [ ] | [ ] | Predecisional Information | [ ] | [ ] |
| Business-Sensitive Information | [ ] | [ ] | Programmatic Notice | | |
| Computer Software Notice | [ ] | [ ] | Proprietary Information | [ ] | [ ] |
| Copyright License Notice | [ ] | [ ] | Purpose and Use | [ ] | [✓] |
| Export Controlled Information | [ ] | [ ] | Thesis/Dissertation | [ ] | [ ] |
| Legal Disclaimer | [✓] | [ ] | Trademark Disclaimer | [ ] | [ ] |
| Limited Disclosure | [ ] | [ ] | Unclassified Controlled Nuclear Information/Official Use Only | [ ] | [ ] |
| Patent Status | [ ] | [✓] | | | |

N/A
Responsible Manager (Printed/Signature)

Additional Information

9413147.0279

SEP 22 1993 Sta. 21

# ENGINEERING DATA TRANSMITTAL



1. EDT 140991

| | | |
|---|---|---|
| 2. To: (Receiving Organization) Fluids Systems Engineering | 3. From: (Originating Organization) System Structural Integrity Assessment | 4. Related EDT No.: 140954 |
| 5. Proj./Prog./Dept./Div.: W23460/N13AB | 6. Cog. Engr.: J. Harris | 7. Purchase Order No.: N/A |
| 8. Originator Remarks: The photographs in the final issue will be color xeroxed. | | 9. Equip./Component No.: N/A |
| | | 10. System/Bldg./Facility: 241-AY/AZ |
| 11. Receiver Remarks: | | 12. Major Assm. Dwg. No.: N/A |
| | | 13. Permit/Permit Application No.: N/A |
| | | 14. Required Response Date: 09/03/93 |

15. DATA TRANSMITTED

| (A) Item No. | (B) Document/Drawing No. | (C) Sheet No. | (D) Rev. No. | (E) Title or Description of Data Transmitted | (F) Impact Level | (G) Reason for Transmittal | (H) Originator Disposition | (I) Receiver Disposition |
|---|---|---|---|---|---|---|---|---|
| 1 | WHC-SD-WM-RPT-078 | | 0 | Visual Examination of Tank Annuli at the 241-AY/AZ Tank Farm | ~~2~~ 4 3 PGH | 4 | 1 | |

16. KEY

| Impact Level (F) | Reason for Transmittal (G) | Disposition (H) & (I) |
|---|---|---|
| 1, 2, 3, or 4 (see MRP 5.43) | 1. Approval 2. Release 3. Information 4. Review 5. Post-Review 6. Dist. (Receipt Acknow. Required) | 1. Approved 2. Approved w/comment 3. Disapproved w/comment 4. Reviewed no/comment 5. Reviewed w/comment 6. Receipt acknowledged |

17. SIGNATURE/DISTRIBUTION (See Impact Level for required signatures)

| (G) Reason | (H) Disp. | (J) Name | (K) Signature | (L) Date | (M) MSIN | (J) Name | (K) Signature | (L) Date | (M) MSIN | (G) Reason | (H) Disp. |
|---|---|---|---|---|---|---|---|---|---|---|---|
| 1 | 1 | Cog.Eng. J. Harris | | 9/9/93 | H5-52 | D. C. Pfluger | | 9/9/93 | H5-52 | 1 | 1 |
| 1 | 1 | Cog. Mgr. K. V. Scott | | 9/10/93 | H5-52 | | | | | | |
| 1 | 1 | QA R. Malhan | | 9/14/93 | S1-57 | | | | | | |
| ~~1~~ | 1 | D. L. Powell | | 9/14/93 | L4-32 | | | | | | |
| 1 | 1 | F. R. Vollert | | 9/20/93 | H5-09 | | | | | | |
| 1 | 1 | E. J. Walter | | 9/9/93 | H5-52 | | | | | | |
| 1 | 1 | ~~J.~~ L. McTees | | 9/14/93 | R1-51 | | | | | | |

| 18. | 19. | 20. | 21. DOE APPROVAL (if required) |
|---|---|---|---|
| J. Harris<br>Signature of EDT Originator — Date 9/9/93 | M. A. McLaughlin<br>Authorized Representative for Receiving Organization — Date 9/20/93 | K. V. Scott<br>Cognizant/Project Engineer's Manager — Date 9/17/93 | Ltr. No.<br>[] Approved<br>[] Approved w/comments<br>[] Disapproved w/comments |

BD-7400-172-2 (07/89) (EF) GEF097

BD-7400-172-1 (07/

9413147.0280

# SUPPORTING DOCUMENT

1. Total Pages 51

| 2. Title | 3. Number | 4. Rev No. |
|---|---|---|
| VISUAL EXAMINATION REPORT FOR TANK ANNULI AT THE 241-AY/AZ TANK FARM | WHC-SD-WM-RPT-078 | 0 |

5. Key Words

Double-Shell Tank Examination, CCTV, WAC, Video Inspection System, Annulus Examination, Tank Integrity Assessment

6. Author

Name: J. Harris

Signature

Organization/Charge Code 23460/N13AB


7. Abstract

This document records the results of the examination of the annuli of the double-shell tanks at the 241-AY/AZ Tank Farm. This examination supports the "not unfit for use" assessment of the tanks in accordance with the Washington Administrative Code 173-303-640(2).


APPROVED FOR PUBLIC RELEASE 9/22/93 N. Soler

8. PURPOSE AND USE OF DOCUMENT - This document was prepared for use within the U.S. Department of Energy and its contractors. It is to be used only to perform, direct, or integrate work under U.S. Department of Energy contracts. This document is not approved for public release until reviewed.

PATENT STATUS - This document copy, since it is transmitted in advance of patent clearance, is made available in confidence solely for use in performance of work under contracts with the U.S. Department of Energy. This document is not to be published nor its contents otherwise disseminated or used for purposes other than specified above before patent approval for such release or use has been secured, upon request, from the Patent Counsel, U.S. Department of Energy Field Office, Richland, WA.


DISCLAIMER - This report was prepared as an account of work sponsored by an agency of the United States Government. Neither the United States Government nor any agency thereof, nor any of their employees, nor any of their contractors, subcontractors or their employees, makes any warranty, express or implied, or assumes any legal liability or responsibility for the accuracy, completeness, or any third party's use or the results of such use of any information, apparatus, product, or process disclosed, or represents that its use would not infringe privately owned rights. Reference herein to any specific commercial product, process, or service by trade name, trademark, manufacturer, or otherwise, does not necessarily constitute or imply its endorsement, recommendation, or favoring by the United States Government or any agency thereof or its contractors or subcontractors. The views and opinions of authors expressed herein do not necessarily state or reflect those of the United States Government or any agency thereof.


9. Impact Level 39

10. RELEASE STAMP

OFFICIAL RELEASE BY WHC 20
DATE SEP 22 1993
Sta. 21

9413147.0281

WHC-SD-WM-RPT-078
REV. 0

# VISUAL EXAMINATION REPORT FOR TANK ANNULI AT THE 241-AY AND AZ TANK FARM

AUGUST 1993

9413147.0282


Prepared By: _____ 9/9/93
J. Harris, Principal Engineer — Date
System Structural Integrity Assessments

Examination Engineer AY: _____ 9/14/93
D. L. Powell Jr., Engineering Technician — Date
Equipment Testing Laboratory

Examination Engineer AZ: _____ 9/9/93
D. C. Pfluger, Senior Engineer — Date
System Structural Integrity Assessments

Reviewed By: _____ 9/9/93
E. J. Walter, Principal Engineer — Date
System Structural Integrity Assessments

Approved By: _____ 9/10/93
K. V. Scott, Manager — Date
System Structural Integrity Assessments



WESTINGHOUSE HANFORD COMPANY
For The
U.S. Department of Energy
Richland Field Office

## CONTENTS

PAGE

1.0 INTRODUCTION . . . . . 1

2.0 OBJECTIVE . . . . . 1

3.0 SCOPE . . . . . 2

4.0 CCTV EXAMINATION EQUIPMENT AND PROCEDURES . . . . . 3

5.0 GENERAL OBSERVATIONS . . . . . 6

6.0 CONCLUSIONS AND RECOMMENDATIONS . . . . . 7
6.1 CONCLUSIONS . . . . . 7
6.2 RECOMMENDATIONS . . . . . 8

7.0 REFERENCES . . . . . 9

ATTACHMENT 1 - Verification Check Sheets . . . . . A1-1

ATTACHMENT 2 - Photograph, Annulus, Tank 241-AY . . . . . A2-1

ATTACHMENT 3 - Examination Photographs . . . . . A3-1

ATTACHMENT 4 - Video Review Record - Doubles-Shell Tank Annulus 241-AY & AZ Tanks . . . . . A4-1

ATTACHMENT 5 - Internal Memo, DCP-93-004, Tank 101-AZ Annulus Smears . A5-1

ATTACHMENT 6 - Savannah River Site Assessment . . . . . A6-1

## FIGURES

FIGURE 1 - Typical Arrangement for Annulus Examination of the Double-Shell Tanks . . . . . 5

9413147.0283

# VISUAL EXAMINATION REPORT FOR TANK ANNULI AT THE 241-AY AND AZ TANK FARM

## 1.0 INTRODUCTION

The Washington State Department of Ecology's *Dangerous Waste Regulations*, Washington Administrative Code (WAC) 173-303-640(2)(a) has provisions for integrity assessments of tank systems. This section of the WAC states:

> "For each existing tank system, the owner or operator must determine that the tank system is not leaking or is unfit for use."

Additionally the WAC states that the written assessment, to be kept on file at the facility, will be reviewed and certified by an independent, qualified registered professional engineer, in accordance with WAC 173-303-810-(13)(a). These regulations are applicable to the hazardous portion of wastes stored in the various facilities of the Tank Farm Project.

The *Tank Farm Project Tank Integrity Assessment Program Plan*, WHC-SD-WM-AP-017, Rev. 0, identifies the tasks to be performed during the assessment of the existing tank system which are regulated by the WAC. The Tank Farm Project Tank Integrity Assessment Program Plan describes the components to be assessed and the examinations, tests, analysis, data management and reporting requirements.

Closed circuit television (CCTV) examination of select areas of the annulus of the tanks was performed and the results of the examinations have been reviewed as required by the integrity assessment program plan. The findings of those reviews are contained in this report.

This report satisfies the visual examination requirements of the Tank Farm Project Tank Integrity Assessment Program Plan.

## 2.0 OBJECTIVE

The objective of the program plan is to determine if the tank system is "not leaking" or is "unfit for use", in order to satisfy the WAC requirements.

The program plan requires this examination to assess the degradation and corrosion of the primary and secondary shells, to provide a record of surface conditions as a baseline for subsequent examinations, to identify the present state of corrosion of the primary and secondary shell walls in the annulus, and to survey the annulus for surface conditions and hardware that could restrict or obstruct access for the performance of other non-destructive examinations.

9413147.0284

Further, this type of examination is able and intended to detect visible cracks, potential leak sites, and other physical impairments. This report in accordance with the objective of the program plan, documents how the examination was conducted, the observations and the conclusions.

## 3.0 SCOPE

The visual examinations were conducted in two phases:

PHASE I

A CCTV camera was lowered via two pipe dome risers approximately 180° apart in each of the two 241-AY and AZ double-shell tanks (DST) (see Table 1), thereby providing access to the tank annulus. The AY tank farm has 3-in. risers and the AZ tank farm has 4-in. risers.

The visible surfaces of the primary and secondary steel tanks and the insulating concrete were examined by an examination engineer, and all images were recorded on video tape. Verification check sheets were completed during the CCTV examinations by the examination engineer to provide an examination record. See Attachment 1.

PHASE II

A review of the video tape was performed after completion of the initial examination of the tanks in the farms. Review observation records for the CCTV video tapes have been completed (see Attachment 4) for the annuli listed below:

241-AY-101, riser 17H and 17C
241-AY-102, riser 17C and 17H

241-AZ-101, riser 17A and 17F
241-AZ-102, riser 17A and 17F

9413147.0285

9413147.0286

Table 1

LIST OF 241-AY & AZ TANK ANNULUS EXAMINATION TAPES
(All tapes reviewed by J. Harris)

| Exam Tape # | Exam Access Riser* | Exam Date | Exam Depth Range (in.) | Date Reviewed |
|---|---|---|---|---|
| AY TANK | | | | |
| 1 | 241-AY-102-17C | 05/27/92 | 300-636 | 07/20/93 |
| 2 | 241-AY-102-17H | 05/28/92 | 300-636 | 07/21/93 |
| 3 | 241-AY-101-17H | 05/29/92 | 300-636 | 07/21/93 |
| 4 | 241-AY-101-17C | 06/01/92 | 300-636 | 07/23/93 |
| Exam Tape # | Exam Access Riser* | Exam Date | Exam Depth Range (in.) | Date Reviewed |
| AZ TANK | | | | |
| 1A | 241-AZ-101-17A | 07/23/93 | 300-636 | 08/04/93 |
| 1B | 241-AZ-101-17A | 07/26/93 | 636 | 08/04/93 |
| 2 | 241-AZ-101-17F | 07/26/93 | 300-655 | 08/05/93 |
| 3 | 241-AZ-102-17F | 07/27/93 | 300 | 08/13/93 |
| 4 | 241-AZ-102-17A | 07/30/93 | 300-660 | 08/23/93 |
| 5 | 241-AZ-101-17A | 07/28/93 | Smear Sample | 08/31/93 |

*Reference SD-RE-TI-093, *Double-Shell Underground Waste Storage Tanks, Riser Survey*.

## 4.0 CCTV EXAMINATION EQUIPMENT AND PROCEDURES

The *Acceptance Test Report for Double-Shell Tank Inspections*, WHC-SD-WM-ATR-018, (WHC 1992) demonstrates the acceptability of the CCTV examination system. The acceptance test report provides the following description of the equipment and activities for DST inspections. The examination system consists of a remotely operated video camera suspended on aluminum rods. The tilt

capability of the camera is 65° up and 90° down from the horizontal plane. The horizontal pan range is approximately 340°. The camera is equipped with lights of variable intensity. The camera is qualified to examine from a distance of 20 ft. (6.09m) at which resolution is equivalent to that attainable by direct visual examination. Direct visual examination is equivalent to resolving a 1/32 in. (0.079-cm) line on an 18 percent neutral gray card at a distance of 24 in.(60.0-cm). This standard is taken from the *Rules for In-Service Inspection of Nuclear Power Plant Components*, Section XI, ASME Boiler and Pressure Vessel Code (ASME 1989).

Electronic position encoders were used to provide real-time digital position reference of the CCTV images in the annulus. The view of the examination camera was monitored by the examination engineer during the examination. The focus, zoom, lighting, and speed of the camera were adjusted to provide the optimum viewing with the equipment available. If a suspected discrepancy appeared, every effort was made to obtain a clear image for review and record. Additional detail regarding the equipment used and the inspection procedure is available in *CCTV Examination Operating Procedure for the Double-Shell Tanks*, WHC-SD-WM-TCP-003, Rev. 0 (WHC 1991).

9413147.0287

The camera was lowered through the designated risers into the annulus. The examination began with the camera lowered approximately 25 feet (7.6m) below the top of the riser and continued in 4-foot (1.2m) increments to a depth where the bottom knuckle of the primary-shell could be viewed. A nearly complete vertical strip of the surface of the primary and secondary-shell was examined from the 25 foot (7.6m) depth to and including the secondary-shell bottom of the annulus.

The various risers used for access into the annuli may be located at different radii. When a riser is located closer to the outer wall, the actual degree of rotation the camera can achieve, without hitting the secondary shell, is reduced. The actual amount of camera rotation is shown on the video review records in Attachment 4.

Approximately 18 percent of the primary-shell surface and 30 percent of the secondary-shell surface were examined in each tank. Figure 1 depicts the viewing position of and the typical area covered by the camera in the annulus. The primary-shell surface coverage is limited by the curvature of the tank. The secondary-shell surface coverage is limited by the range of the camera, which is 20 feet (6.09m).

9413147.0288

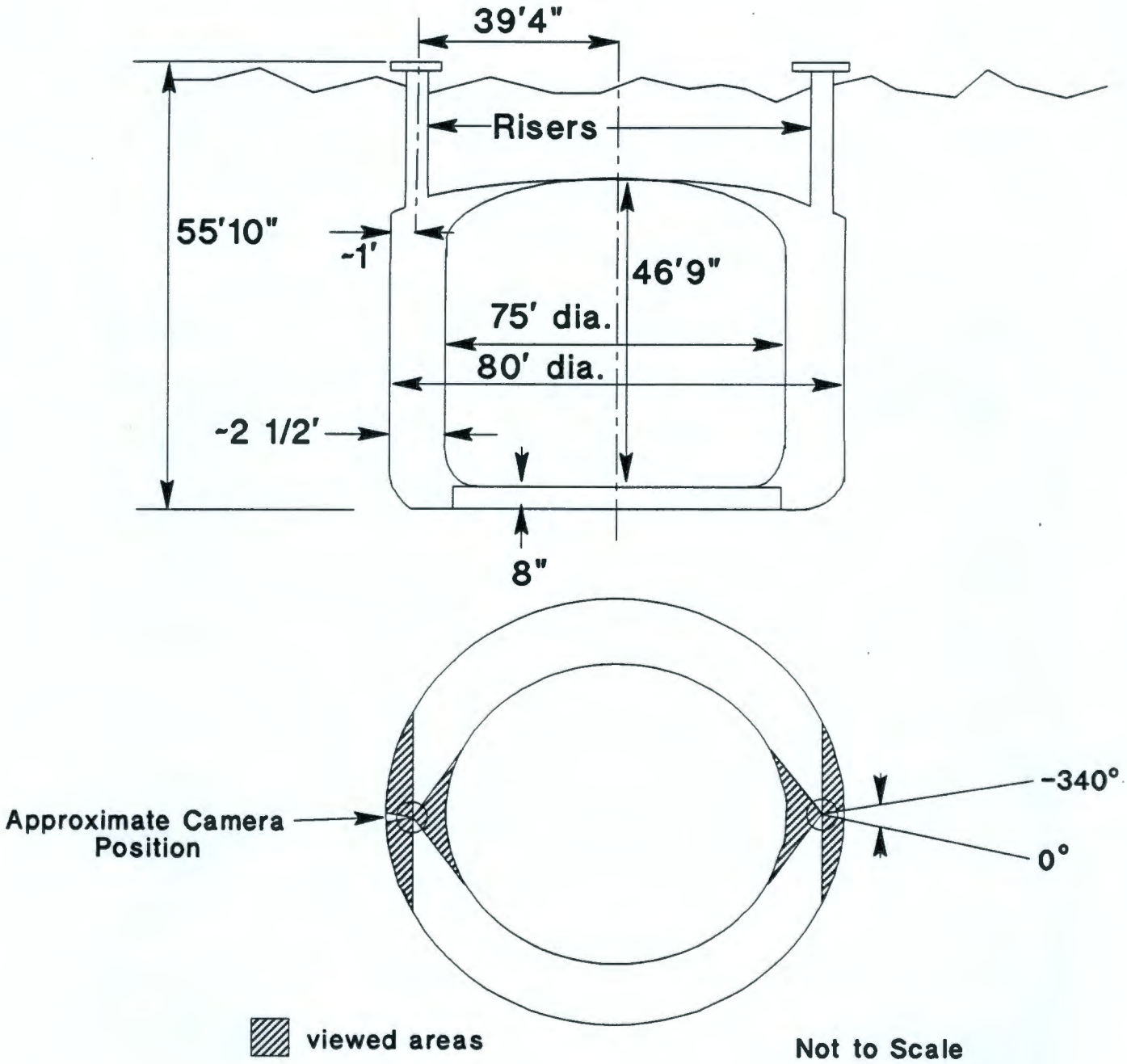


FIGURE 1. Typical Arrangement for Annulus Examination of the Double-Shell Tanks.

The radiation rates were measured at different depths in each tank annulus A calibrated R07 probe was used. The maximum gamma radiation exposure rates in roentgens per hour (R/hr) encountered by the equipment in the 241-AY & AZ tank farm annuli are listed as follows:

| | |
|---|---|
| 241-AY-101 - 45.0 | 241-AZ-101 - 250 |
| 241-AY-102 - 7.3 | 241-AZ-102 - 170 |

## 5.0 GENERAL OBSERVATIONS

As previously noted, the video examination of the primary tank and secondary liner wall and the insulating concrete surfaces was accomplished using a closed circuit television (CCTV). As the examination occurred, the image was viewed on a monitor by the examination engineer at the site and recorded on a video cassette tape. Areas with indications of suspected material degradation were revisited until the examination was considered adequate.

The photograph in Attachment 2 provides a reference view of the condition of the surface of the 241-AY-101 primary shell taken after construction and before the tank was placed in service. The surface condition has not significantly changed. A similar construction photograph for the AZ tank farm was unavailable.

The 241-AY & AZ video tapes listed in Table 1, were viewed by a certified second party examiner, through the System Structural Integrity Assessment group, to provide recorded, independent review observations (Attachment 4).

Rust does exist over many areas of the tank shell surfaces; however, the degradation of the tanks is considered minimal. The accumulation of rust was generally greater at the welds and the adjacent heat affected zone than at other areas. The degree of rust varies from tank to tank, but more markedly between the primary and secondary-shells. Without exception, the progress of rust on the secondary-shell exceeds the progress of rust on the primary-shell.

In several areas on both primary and secondary-shell surfaces, condensation appears to have existed. Also on the secondary-shell in the haunch area there are several circular water lines with accompanying rust residue. It is believed that this rust was caused when the haunch subassemblies were inverted before assembly, and were allowed to collect rainwater and condensation (dew).

Attachment 4 describes areas of corrosion, markings and blemishes that were observed and cannot be accounted for. None are thought to reflect significant degradation of the tank integrity. Some areas of the castable refractory concrete of the AZ tank farm were noted as being upset, cracked, or otherwise degraded. There is concrete type material debris on the 241-AY-101 and 102 tank annulus floors. It appears that the visible portions of the AY refractory slabs



9413147.0289

9413147.0290

have been replaced with concrete.

There is evidence of liquid draining down the primary tank and secondary shells during at least two separate intervals. The evidence of the earlier draining is the corrosion pattern, especially on the secondary liner wall. The corrosion covers a large portion of the surface with some panels showing more corrosion residue than others and there are islands where the mill scale remains. Evidence of the second draining is a whitish residue which streaks down both shells, originating in the haunch region. This whitish residue, which generally overlays the rust residue or mill scale, does not appear to have initiated or accelerated the corrosion process.

Attachment 3 contains photographs taken from the video tapes which depict conditions observed. Photograph A3-2 is a view of the castable refractory concrete showing the cracked condition in the area extending from the tank knuckle to the retaining ring. Photograph A3-3 shows the heavy debris on the annulus floor.

During the field examination of the 241-AZ-101 tank, a nontypical indication was observed near the lower knuckle region (see photograph A3-4). The examination engineer could not characterize the area. Therefore he decided to have smears taken to determine if contamination existed. Internal memorandum #DCP-93-004 (Attachment 5), discusses this activity. No contamination was detected from the two smears taken from the suspect area nor from two baseline areas. Tape 5 records the activities while the smears were taken.

Additionally, a copy of the tape showing the indications was sent to examiners at Savannah River for review. Attachment 6 is their assessment of the indication.

During the examination of the 241-AZ-101 tank through riser 17F, some of the 20 degree azimuth rotation viewing passes were not recorded on video tape and not viewed. See Attachment 4 video review record.

The 20 degree azimuth rotation of the camera when in the near horizontal position and viewing the inner wall straight on, often times allows an area of the tank wall to be missed from viewing.

## 6.0 CONCLUSIONS AND RECOMMENDATIONS

### 6.1 CONCLUSIONS

This visual examination found no indications of primary shell leakage.

Further, this examination did not detect evidence of visible cracks, potential leak sites, or other physical impairments to the tank shells.

The castable refractory damage in the AZ tank farm is minor. No primary shell tank settlement was observed. The damaged refractory does not seen to have any detrimental effect on the integrity of the tanks. If this condition exists under the primary shell bottom plate not visible by this examination, there may be enough debris to partially obstruct the annulus ventilation system air flow.

The concrete type material debris on the floor of the annulus of the AY tanks and other observations confirm that before going into service the outer two foot perimeter of both 101 & 102 AY refractory slabs were replaced with reinforced concrete. Also, the steel retention bands for these slabs were replaced, see drawing H-2-35299 (Vitro 1980).

9413147.0291

## 6.2 RECOMMENDATIONS

1. A Kodak[1] color bar inside the annulus would be useful for establishing a more accurate color comparison.

2. The humidity in the annulus should be maintained at 70 percent or less to reduce the potential for corrosion or rust. See *Metals Handbook* (1987, p.511) and *Shreir* (1963, p.2.11) for the effect of atmospheric factors on corrosion. Precautions should be taken to keep water out of the annulus.

3. A future visual comparison examination of at least these same tank areas should be conducted within about 10 years, or should be included in any other types of subsequent periodic integrity assessment examinations of these tanks.

4. Long term plans should evaluate the need to perform future additional visual examinations through other risers. If future examinations are only to coincide with this examination, it is recommended that the examination frequency be ten years minimum.

5. The examination engineer should keep a running log of azimuth and elevation during the recording process of future visual examinations.

6. The tilt range of the camera in the very high and low extremes presently captures the same area of view approximately 4 times in the course of the examination. The tilt range should be reduced to minimize this redundancy.

---

[1]Kodak is a registered trademark of the Eastman Kodak Company.

## 7.0 REFERENCES

Anderson, A. A., 1992, *Double-Shell Underground Waste Storage Tanks, Riser Survey*, SD-RE-TI-093, Westinghouse Hanford Company, Richland, Washington.

ASME, "*Rules for In-Service Inspection of Nuclear Power Plant Components, Section XI, 1989.*" American Society of Mechanical Engineers Boiler and Pressure Vessel Code, American Society of Mechanical Engineers, New York, New York.

Ecology, 1990, "Dangerous Waste Regulations," *Washington Administrative Code* Chapter 173-303-640(2), as amended, Washington State Department of Ecology, Olympia, Washington.

Eacker, J. A., 1991, *Tank Farm Project Tank Integrity*, WHC-SD-WM-AP-017, Rev. 0, Westinghouse Hanford Company, Richland, Washington.

Metals Handbook, 1987, Corrosion, Ninth Edition, Volume 13, ASM International, Metals Park, Ohio.

Shreir, L. L., 1963, Corrosion, Volume 1, John Wiley & Sons, New York, New York.

Sumsion, M. L., 1992, *The Acceptance Test Report for Double-Shell Tank Inspections*, WHC-SD-WM-ATR-018, Westinghouse Hanford Company, Richland, Washington.

Sumsion, M. L., 1991, *CCTV Examination Operating Procedure for the Double-Shell Tanks*, WHC-SD-WM-TCP-003, Rev. 0, Westinghouse Hanford Company, Richland, Washington.

Vitro 1980, *Structural Modification Insulating Concrete Plan and Details*, June 1980, Hanford Engineering Services Division of Vitro Corp. of America, Richland, Washington.

9413147.0292

# ATTACHMENT 1

## Verification Check Sheets

9413147.0293

| TANK # | LOC. I.D. | VIDEO RESOLUTION CHECK IF O.K. | COMMENTS | VERIFIED BY | DATE/ TIME |
|---|---|---|---|---|---|
| AY-102 | 17 C | ✓ | ok | RD | 5/27/92 |
| AY-102 | 17 H | ✓ | ok | RD | 5/29/92 |
| AY-101 | 17 H | ✓ | ok | RD | 6/1/92 |
| AY-101 | 17 C | ✓ | ok | RD | 6/2/92 |
| | | | | | |
| | | | | | |
| | | | | | |
| | | | | | |
| | | | | | |
| | | | | | |
| | | | | | |
| | | | | | |
| | | | | | |
| | | | | | |
| | | | | | |
| | | | | | |
| | | | | | |
| | | | | | |
| | | | | | |
| | | | | | |
| | | | | | |
| | | | | | |
| | | | | | |
| | | | | | |
| | | | | | |
| | | | | | |

9413147.0294

AREAS OF INTEREST EXAMINATION VERIFICATION CHECK SHEET

| INITIAL/DATE/TIME | TANK # AY-102 | RISER I.D. 17C | VIDEO TAPE I.D. # AY-1 |
|---|---|---|---|
| Completed RD 15-27-92/2:30 | OUTSIDE WALL OF THE PRIMARY TANK | | |
| Completed RD 15-27-92/2:30 | INSIDE WALL OF THE SECONDARY TANK | | |
| Completed RD 15-27-92/2:30 | PRIMARY TANK UPPER/LOWER KNUCKLE AREA | | |
| Completed RD 15-27-92/2:30 | SECONDARY UPPER/LOWER KNUCKLE AREA | | |
| Completed RD 15-27-92/2:30 | CONCRETE EDGE BELOW THE PRIMARY TANK | | |
| Completed RD 15-27-92/2:30 | ALL WELDS | | |
| Completed RD 15-27-92/2:30 | ANNULUS FLOOR | | |
| Completed RD 15-27-92/2:30 | EXIT OPENING OF THE SLOTS IN THE INSULATING CONCRETE UNDER THE PRIMARY TANK | | |
| | | | |

9413147.0295

AREAS OF INTEREST EXAMINATION VERIFICATION CHECK SHEET

| INITIAL/DATE/TIME | TANK # | RISER I.D. | VIDEO TAPE I.D. # |
|---|---|---|---|
| | AY-102 | 17H | AY-2 |
| Completed 15-29-92/10:15 | OUTSIDE WALL OF THE PRIMARY TANK | | |
| Completed 15-29-92/10:15 | INSIDE WALL OF THE SECONDARY TANK | | |
| Completed 15-29-92/10:15 | PRIMARY TANK UPPER/LOWER KNUCKLE AREA | | |
| Completed 15-29-92/10:15 | SECONDARY UPPER/LOWER KNUCKLE AREA | | |
| Completed 15-29-92/10:15 | CONCRETE EDGE BELOW THE PRIMARY TANK | | |
| Completed 15-29-92/10:15 | ALL WELDS | | |
| Completed 15-29-92/10:15 | ANNULUS FLOOR | | |
| Completed 15-29-92/10:15 | EXIT OPENING OF THE SLOTS IN THE INSULATING CONCRETE UNDER THE PRIMARY TANK | | |
| | | | |

9413147.0296

9413147.0297

AREAS OF INTEREST EXAMINATION VERIFICATION CHECK SHEET

| INITIAL/DATE/TIME | TANK # | RISER I.D. | VIDEO TAPE I.D. # |
|---|---|---|---|
| | AY101 | 17 H | AY-3 |
| Completed RD 16-1-92/11:00 | OUTSIDE WALL OF THE PRIMARY TANK | | |
| Completed RD 16-1-92/11:00 | INSIDE WALL OF THE SECONDARY TANK | | |
| Completed RD 16-1-92/11:00 | PRIMARY TANK UPPER/LOWER KNUCKLE AREA | | |
| Completed RD 16-1-92/11:00 | SECONDARY UPPER/LOWER KNUCKLE AREA | | |
| Completed RD 16-1-92/11:00 | CONCRETE EDGE BELOW THE PRIMARY TANK | | |
| Completed RD 16-1-92/11:00 | ALL WELDS | | |
| Completed RD 16-1-92/11:00 | ANNULUS FLOOR | | |
| Completed RD 16-1-92/11:00 | EXIT OPENING OF THE SLOTS IN THE INSULATING CONCRETE UNDER THE PRIMARY TANK | | |
| | | | |

AREAS OF INTEREST EXAMINATION VERIFICATION CHECK SHEET

| INITIAL/DATE/TIME | TANK # | RISER I.D. | VIDEO TAPE I.D. # |
|---|---|---|---|
| | AY-101 | 17C | AY-4 |
| Completed RP 16-2-92/10:30 | OUTSIDE WALL OF THE PRIMARY TANK | | |
| Completed RP 16-2-92/10:30 | INSIDE WALL OF THE SECONDARY TANK | | |
| Completed RP 16-2-92/10:30 | PRIMARY TANK UPPER/LOWER KNUCKLE AREA | | |
| Completed RP 16-2-92/10:30 | SECONDARY UPPER/LOWER KNUCKLE AREA | | |
| Completed RP 16-2-92/10:30 | CONCRETE EDGE BELOW THE PRIMARY TANK | | |
| Completed RP 16-2-92/10:30 | ALL WELDS | | |
| Completed RP 16-2-92/10:30 | ANNULUS FLOOR | | |
| Completed RP 16-2-92/10:30 | EXIT OPENING OF THE SLOTS IN THE INSULATING CONCRETE UNDER THE PRIMARY TANK | | |
| | | | |

9413147.0298

| TANK # | LOC. I.D. | VIDEO RESOLUTION CHECK IF O.K. | COMMENTS | VERIFIED BY | DATE/ TIME |
|---|---|---|---|---|---|
| 101-AZ | 17B | ✓ | Elmo camera | [illegible] | 7/22/93 10:06am |
| 101-AZ | 17A | ✓ | Panasonic " | [illegible] | 7/26/93 8:58 am |
| 101-AZ | 17F | ✓ | " | [illegible] | 7/26/93 10:33 am |
| 102-AZ | 17F | ✓ | " | [illegible] | 7/27/93 0859 |
| 101-AZ | 17A | ✓ | " smears | [illegible] | 7/28/93 |
| 102-AZ | 17A | ✓ | Panasonic Examination | [illegible] | 7/29/93 0942 |
| 102-AZ | 17A | ✓ | Elmo Exam | [illegible] | 7/30/93 1006 |
| | | | | | |
| | | | | | |
| | | | | | |
| | | | | | |
| | | | | | |
| | | | | | |
| | | | | | |
| | | | | | |
| | | | | | |
| | | | | | |
| | | | | | |
| | | | | | |
| | | | | | |
| | | | | | |
| | | | | | |
| | | | | | |
| | | | | | |
| | | | | | |
| | | | | | |
| | | | | | |

AZ-101-17B abandoned - sharp edge cut cable
A515 Gr 60 on secondary of 101-AZ (17F)



9413147.0299

AREAS OF INTEREST EXAMINATION VERIFICATION CHECK SHEET

| INITIAL/DATE/TIME | TANK # | RISER I.D. | VIDEO TAPE I.D. # |
|---|---|---|---|
| | 101-AZ | 17A | Z41-AZ-101-17A Tapes 1of2 & 2of2 |
| Completed DP 17/26/93 / 10:12am | OUTSIDE WALL OF THE PRIMARY TANK | | |
| Completed DP / 7/26/93 /10:12am | INSIDE WALL OF THE SECONDARY TANK | | |
| Completed DP / 7/26/93 /10:12am | PRIMARY TANK UPPER/LOWER KNUCKLE AREA | | |
| Completed DP / 7/26/93 /10:12am | SECONDARY UPPER/LOWER KNUCKLE AREA | | |
| Completed DP / 7/26/93 /10:12am | CONCRETE EDGE BELOW THE PRIMARY TANK | | |
| Completed DP / 7/26/93 /10:12am | ALL WELDS | | |
| Completed DP / 7/26/93 /10:12am | ANNULUS FLOOR | | |
| Completed DP 17/26/93 /10:12am | EXIT OPENING OF THE SLOTS IN THE INSULATING CONCRETE UNDER THE PRIMARY TANK | | |
| | | | |

White solid above primary lower knuckle horizontal weld.



9413147.0300

AREAS OF INTEREST EXAMINATION VERIFICATION CHECK SHEET

| INITIAL/DATE/TIME | TANK # | RISER I.D. | VIDEO TAPE I.D. # |
|---|---|---|---|
| | 101-AZ | 17F | Z41-AZ-101-17F Tape 1 of 1 |
| Completed DP / 7/26/93 / 14:51 | OUTSIDE WALL OF THE PRIMARY TANK | | |
| Completed DP / 7/26/93 / 14:51 | INSIDE WALL OF THE SECONDARY TANK | | |
| Completed DP / 7/26/93 / 14:51 | PRIMARY TANK UPPER/LOWER KNUCKLE AREA | | |
| Completed DP / 7/26/93 / 14:51 | SECONDARY UPPER/LOWER KNUCKLE AREA | | |
| Completed DP / 7/26/93 / 14:51 | CONCRETE EDGE BELOW THE PRIMARY TANK | | |
| Completed DP / 7/26/93 / 14:51 | ALL WELDS | | |
| Completed DP / 7/26/93 / 14:51 | ANNULUS FLOOR | | |
| Completed DP / 7/26/93 / 14:51 | EXIT OPENING OF THE SLOTS IN THE INSULATING CONCRETE UNDER THE PRIMARY TANK | | |
| | | | |

Very small solids at same location as 17A examination.

9413147.0301

9413147.0302

AREAS OF INTEREST EXAMINATION VERIFICATION CHECK SHEET

| INITIAL/DATE/TIME | TANK # | RISER I.D. | VIDEO TAPE I.D. # |
|---|---|---|---|
| | 102-AZ | 17F | 241-AZ-102-17F |
| Completed GP 7/27/93 1435 | OUTSIDE WALL OF THE PRIMARY TANK | | |
| Completed GP 7/27/93 1435 | INSIDE WALL OF THE SECONDARY TANK | | |
| Completed GP 7/27/93 1435 | PRIMARY TANK UPPER/LOWER KNUCKLE AREA | | |
| Completed GP 7/27/93 1435 | SECONDARY UPPER/LOWER KNUCKLE AREA | | |
| Completed GP 7/27/93 1435 | CONCRETE EDGE BELOW THE PRIMARY TANK | | |
| Completed GP 7/27/93 1435 | ALL WELDS | | |
| Completed GP 7/27/93 1435 | ANNULUS FLOOR | | |
| Completed GP 7/27/93 1435 | EXIT OPENING OF THE SLOTS IN THE INSULATING CONCRETE UNDER THE PRIMARY TANK | | |
| | | | |

9413147.0303

AREAS OF INTEREST EXAMINATION VERIFICATION CHECK SHEET

| INITIAL/DATE/TIME | TANK # | RISER I.D. | VIDEO TAPE I.D. # |
|---|---|---|---|
| | 102-AZ | 17A | 241-AZ-102-17A Tape 1 of 1 |
| Completed [illegible] / 7/30/93 / 1413 | OUTSIDE WALL OF THE PRIMARY TANK | | |
| Completed [illegible] / 7/30/93 / 1413 | INSIDE WALL OF THE SECONDARY TANK | | |
| Completed [illegible] / 7/30/93 / 1413 | PRIMARY TANK UPPER/LOWER KNUCKLE AREA | | |
| Completed [illegible] / 7/30/93 / 1413 | SECONDARY UPPER/LOWER KNUCKLE AREA | | |
| Completed [illegible] / 7/30/93 / 1413 | CONCRETE EDGE BELOW THE PRIMARY TANK | | |
| Completed [illegible] / 7/30/93 / 1413 | ALL WELDS | | |
| Completed [illegible] / 7/30/93 / 1413 | ANNULUS FLOOR | | |
| Completed [illegible] / 7/30/93 / 1413 | EXIT OPENING OF THE SLOTS IN THE INSULATING CONCRETE UNDER THE PRIMARY TANK | | |
| | | | |

# ATTACHMENT 2

## Photograph, Annulus, Tank 241-AY

9413147.0304

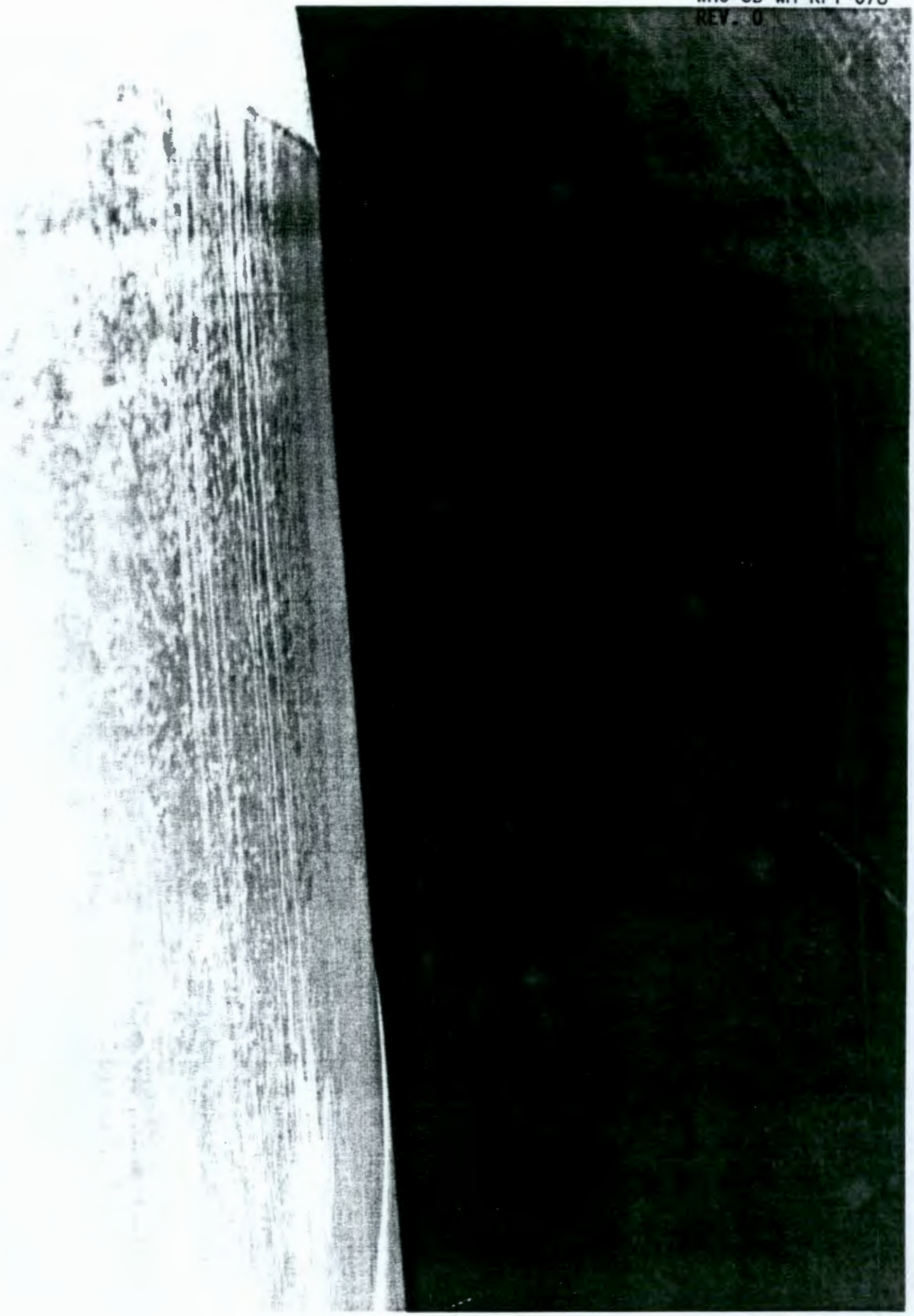

9413147.0305

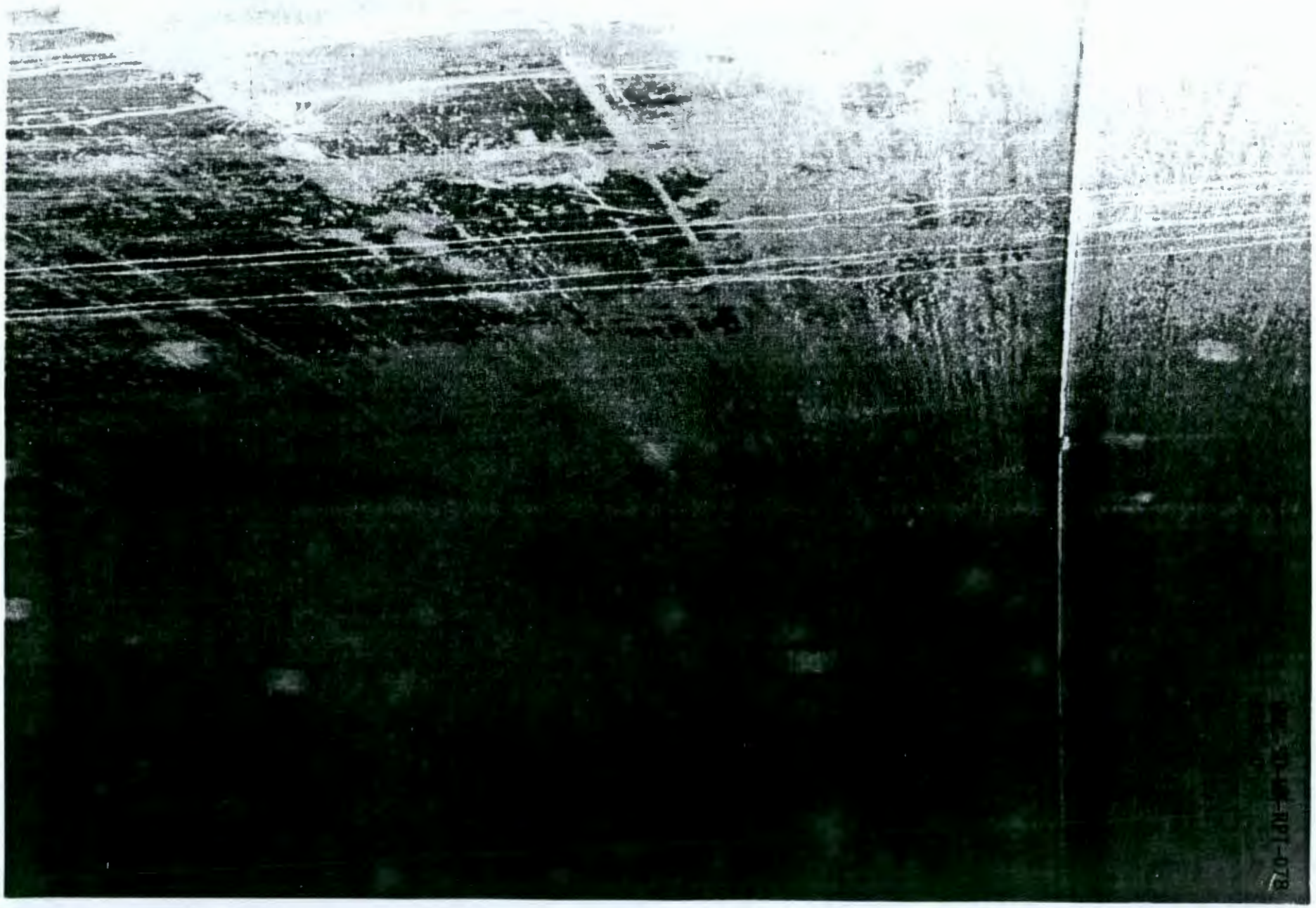
ENPT-078

# ATTACHMENT 3

## Examination Photographs

9413147.0307

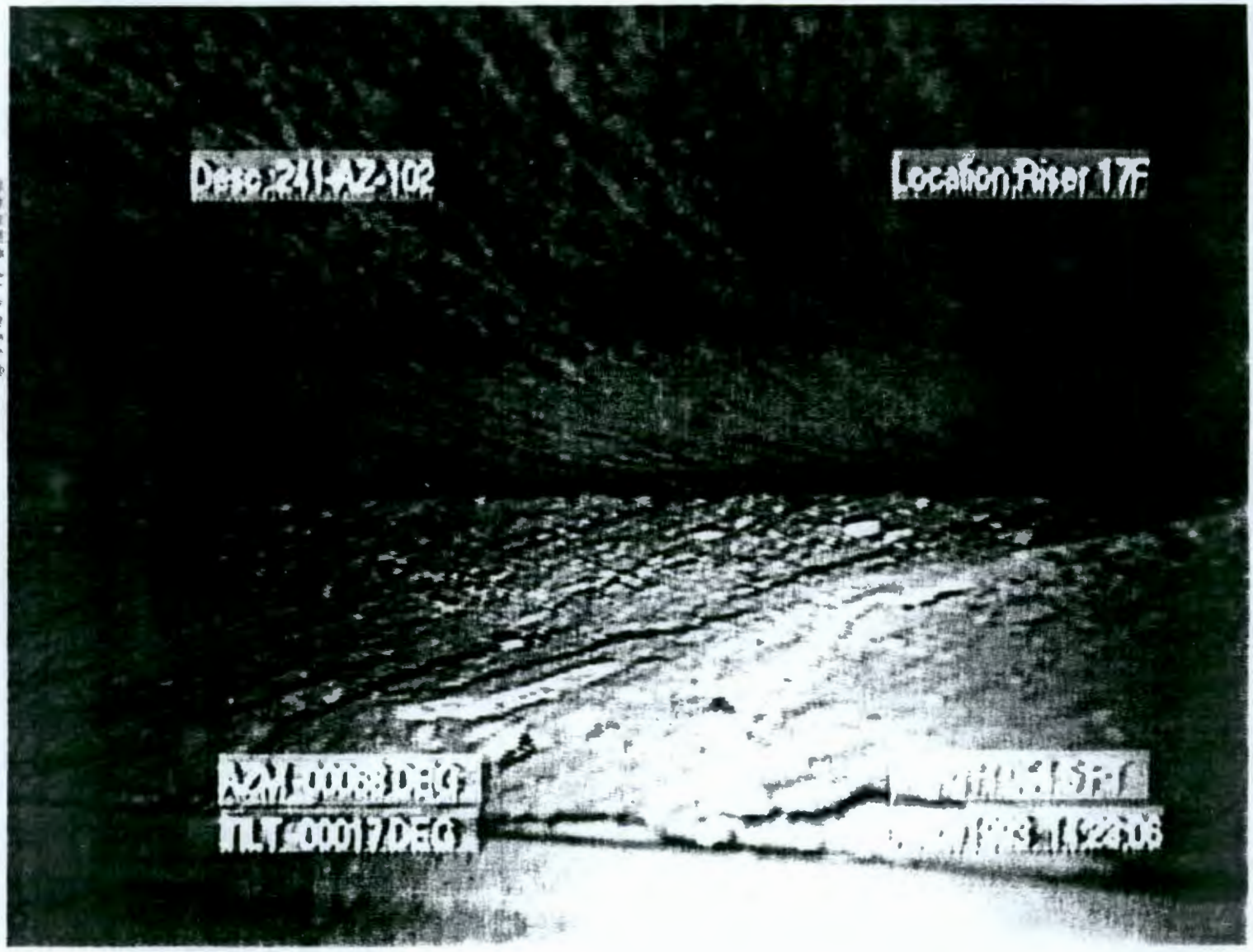


9413147.0308

9413147.0309
AZMTH =186 DEG
DEPTH 8.8 INCH
THET =13 DEG

9413147.0310

Desc:241-AZ-102
Location:RISER 17A
07/30/1993 10:16:02
DEPTH:000.0 FT

# ATTACHMENT 4

## Video Review Record - Doubles-Shell Tank Annulus
## 241-AY & AZ Tanks

9413147.0312

# Video Review Record - Double-Shell Tank Annulus

Review Date: 07/20/93

Tank Number: 241-AY-102-17C  Inspection Date: 05/27/92  Tape Number: 1

Reviewer: J. Harris J. Harris (Print/Signature)

| Tape Time | | VCR | Complementary Information | | | Reviewer Comments |
|---|---|---|---|---|---|---|
| Hr | Min | Time (Min-Sec) | Azim. (Deg.) | Depth (in.) | Tilt (Deg.) | |
| 09 | 50 | 14 | 0 | 300 | -79 | Start; difficult lighting, poor focus |
| 09 | 58 | 05 | -80 | 300 | 80 | Sheet metal strip at haunch outer tank with string, wire or cord wrapping. |
| 10 | 09 | 17 | -200 | 300 | | End |
| 10 | 14 | 10 | 0 | 348 | -67 | Start |
| 10 | 40 | 56 | -220 | 348 | | End |
| 10 | 44 | 58 | -4 | 396 | -67 | Start |
| 10 | 59 | 28 | -220 | 396 | | End |
| 12 | 51 | 40 | 0 | 444 | -70 | Start |
| 13 | 06 | 42 | -221 | 444 | 51 | Rag or paper hanging on outer wall |
| 13 | 08 | 07 | -220 | 444 | | End |
| 13 | 13 | 23 | 0 | 492 | -77 | Start |
| 13 | 26 | 38 | -191 | 492 | -64 | Debri on annulus floor |
| 13 | 29 | 25 | -220 | 492 | | End |
| 13 | 32 | 11 | 0 | 540 | -76 | Start; very little rust |
| 13 | 44 | 43 | -220 | 540 | | End |
| 13 | 48 | 58 | 0 | 588 | -89 | Start |

# Video Review Record - Double-Shell Tank Annulus

Review Date: 07/20/93

Tank Number: 241-AY-102-17C  Inspection Date: 05/27/92  Tape Number: 1

Reviewer: J. Harris D J Harris (Print/Signature)

| Tape Time | | VCR | Complementary Information | | | Reviewer Comments |
|---|---|---|---|---|---|---|
| Hr | Min | Time (Min-Sec) | Azim. (Deg.) | Depth (in.) | Tilt (Deg.) | |
| 14 | 06 | 42 | -220 | 588 | | End |
| 14 | 11 | 18 | 0 | 636 | -12 | Start; heavy debri on floor of annulus |
| 14 | 17 | 05 | 0 | 636 | -89 | End |

# Video Review Record - Double-Shell Tank Annulus

Review Date: 07/21/93

Tank Number: 241-AY-102-17H  Inspection Date: 05/28/92  Tape Number: 2

Reviewer: J. Harris (Print/Signature)

| Tape Time | | VCR | Complementary Information | | | Reviewer Comments |
|---|---|---|---|---|---|---|
| Hr | Min | Time (Min-Sec) | Azim. (Deg.) | Depth (in.) | Tilt (Deg.) | |
| 01 | 23 | 19 | 0 | 300 | -50 | Start |
| 01 | 36 | 58 | -200 | 300 | 81 | End |
| 01 | 40 | 34 | 0 | 348 | -86 | Start |
| 01 | 51 | 34 | -200 | 348 | | End |
| 01 | 56 | 45 | 0 | 396 | -78 | Start |
| 02 | 09 | 06 | -200 | 396 | | End |
| 02 | 10 | 59 | -4 | 444 | -74 | Start |
| 02 | 21 | 55 | -200 | 444 | | End |
| 08 | 56 | 13 | 0 | 492 | -57 | Start |
| 09 | 11 | 52 | -200 | 492 | | End |
| 09 | 15 | 13 | 0 | 540 | -67 | Start |
| 09 | 29 | 13 | -200 | 540 | | End |
| 09 | 33 | 32 | 0 | 588 | -89 | Start |
| 09 | 47 | 33 | -200 | 588 | | End |
| 09 | 57 | 26 | 0 | 636 | -9 | Start; heavy debri on annulus floor, wire mesh screen protector surrounding wires |
| 10 | 04 | 37 | | 636 | | End |

# Video Review Record - Double-Shell Tank Annulus

Review Date: 07/21/93

Tank Number: 241-AY-101-17H  Inspection Date: 05/29/92  Tape Number: 3

Reviewer: J. Harris/ J Harris (Print/Signature)

| Tape Time | | VCR | Complementary Information | | | Reviewer Comments |
|---|---|---|---|---|---|---|
| Hr | Min | Time (Min-Sec) | Azim. (Deg.) | Depth (in.) | Tilt (Deg.) | |
| 01 | 34 | 04 | 0 | 300 | -53 | Start |
| 01 | 54 | 25 | -179 | 300 | 36 | Side view of heavy residue - inner wall |
| 02 | 01 | 06 | | 300 | | End |
| 02 | 04 | 19 | 0 | 348 | -74 | Start |
| 02 | 16 | 24 | -200 | 348 | | End |
| 02 | 20 | 26 | 0 | 396 | -70 | Start |
| 02 | 31 | 38 | -200 | 396 | | End |
| 02 | 33 | 16 | 0 | 444 | -66 | Start |
| 02 | 44 | 52 | -199 | 444 | | End |
| 09 | 32 | 48 | 0 | 492 | -66 | Start |
| 09 | 47 | 48 | -220 | 492 | | End |
| 09 | 50 | 08 | 0 | 540 | -61 | Start |
| 10 | 03 | 46 | -220 | 540 | | End |
| 10 | 07 | 02 | -2 | 588 | -89 | Start; debri on floor |
| 10 | 24 | 57 | -220 | 588 | | End |
| 10 | 32 | 05 | -18 | 636 | -8 | Start |

# Video Review Record - Double-Shell Tank Annulus

Review Date: 07/21/93

Tank Number: 241-AY-101-17H Inspection Date: 05/29/92 Tape Number: 3

Reviewer: J. Harris (Print/Signature)

| Tape Time | | VCR | Complementary Information | | | Reviewer Comments |
|---|---|---|---|---|---|---|
| Hr | Min | Time (Min-Sec) | Azim. (Deg.) | Depth (in.) | Tilt (Deg.) | |
| 10 | 33 | 45 | -87 | 636 | -4 | Inner tank lower knuckle appears to have concrete adhering to it. |
| 10 | 34 | 33 | -152 | 636 | -5 | Air passage way openings are partially closed off by steel retainer ring. |
| 10 | 38 | 42 | | 636 | | End |

# Video Review Record - Double-Shell Tank Annulus

Review Date: 07/23/93

Tank Number: 241-AY-101-17C  Inspection Date: 06/01/92  Tape Number: 4

Reviewer: J. Harris (Print/Signature)

| Tape Time | | VCR | Complementary Information | | | Reviewer Comments |
|---|---|---|---|---|---|---|
| Hr | Min | Time (Min-Sec) | Azim. (Deg.) | Depth (in.) | Tilt (Deg.) | |
| 01 | 25 | 44 | 0 | 300 | -67 | Start |
| 01 | 39 | 45 | -180 | 300 | 37 | Loose unprotected instrumentation wires |
| 01 | 44 | 13 | -220 | 300 | | End |
| 01 | 53 | 09 | 0 | 348 | -58 | Start |
| 02 | 12 | 57 | -220 | 348 | | End |
| 02 | 15 | 01 | 0 | 396 | -50 | Start |
| 02 | 36 | 26 | -220 | 396 | | End |
| 09 | 21 | 54 | 0 | 444 | -67 | Start |
| 09 | 34 | 02 | -220 | 444 | | End |
| 09 | 38 | 58 | 2 | 492 | -74 | Start |
| 09 | 54 | 16 | -220 | 492 | | End |
| 09 | 56 | 32 | 0 | 540 | -66 | Start |
| 10 | 12 | 01 | -220 | 540 | | End |
| 10 | 15 | 20 | 0 | 588 | -89 | Start |
| 10 | 33 | 57 | -220 | 588 | | End |
| 10 | 38 | 26 | -59 | 636 | 0 | Start - debri on floor |

# Video Review Record - Double-Shell Tank Annulus

Review Date: 07/23/93

Tank Number: 241-AY-101-17C  Inspection Date: 06/01/92  Tape Number: 4

Reviewer: J. Harris (Print/Signature)

| Tape Time | | VCR | Complementary Information | | | Reviewer Comments |
|---|---|---|---|---|---|---|
| Hr | Min | Time (Min-Sec) | Azim. (Deg.) | Depth (in.) | Tilt (Deg.) | |
| 10 | 39 | 26 | -59 | 636 | -6 | Concrete on lower knuckle region |
| 10 | 44 | 14 | | 636 | | End |

# Video Review Record - Double-Shell Tank Annulus

Review Date: 08/04/93

Tank Number: 241-AZ-101-17A  Inspection Date: 07/23/93  Tape Number: 1A

Reviewer: J. Harris/J. Harris (Print/Signature)

| Tape Time | | VCR | Complementary Information | | | Reviewer Comments |
|---|---|---|---|---|---|---|
| Hr | Min | Time (Min-Sec) | Azim. (Deg.) | Depth (ft.) | Tilt (Deg.) | |
| 12 | 35 | 42 | 1 | 25 | 77 | Start |
| 12 | 59 | 54 | | | | End |
| 13 | 03 | 10 | 1 | 29 | 85 | Start |
| 13 | 19 | 24 | -200 | | | End |
| 13 | 22 | 25 | 0 | 32.9 | 69 | Start |
| 13 | 39 | 42 | -200 | | | End |
| 13 | 41 | 47 | 0 | 36.9 | 74 | Start |
| 14 | 01 | 04 | 200 | | | End |
| 14 | 06 | 13 | 1 | 41.1 | 66 | Start |
| 14 | 22 | 40 | 220 | | | End |
| 14 | 24 | 44 | 0 | 45 | 70 | Start |
| 14 | 41 | 22 | 220 | | | End |
| 14 | 43 | 59 | 0 | 49 | 81 | Start |
| 09 | 26 | 42 | 200 | | | End |
| 09 | 29 | 39 | 0 | 53 | 86 | Start |
| 09 | 30 | 28 | | | | End of tape |

# Video Review Record - Double-Shell Tank Annulus

Review Date: 08/04/93

Tank Number: 241-AZ-101-17A  Inspection Date: 07/23/93  Tape Number: 1B

Reviewer: J. Harris J. Harris (Print/Signature)

| Tape Time | | VCR | Complementary Information | | | Reviewer Comments |
|---|---|---|---|---|---|---|
| Hr | Min | Time (Min-Sec) | Azim. (Deg.) | Depth (ft.) | Tilt (Deg.) | |
| 09 | 40 | 29 | 82 | 53 | 81 | Start |
| 09 | 42 | 26 | -60 | 53 | -66 | Air passage way is not cut in steel ring |
| 09 | 45 | 48 | -108 | 53 | -29 | White deposits on inner wall above knuckle joint forming horizontal pattern |
| 09 | 52 | 47 | -180 | 53 | | End |
| 09 | 59 | 30 | -0 | 53 | -4 | Start |
| 10 | 07 | 59 | | | | End |

# Video Review Record - Double-Shell Tank Annulus

Review Date: 08/05/93

Tank Number: 241-AZ-101-17F  Inspection Date: 07/26/93  Tape Number: 2

Reviewer: J. Harris (Print/Signature)

| Tape Time | | VCR | Complementary Information | | | Reviewer Comments |
|---|---|---|---|---|---|---|
| Hr | Min | Time (Min-Sec) | Azim. (Deg.) | Depth (ft.) | Tilt (Deg.) | |
| 10 | 49 | 45 | -1 | 25 | -76 | Start |
| 11 | 03 | 01 | -206 | 25 | | End |
| 12 | 31 | 07 | 0 | 29 | -72 | Start |
| 12 | 54 | 14 | -220 | 29 | | End |
| 13 | 00 | 27 | -1 | 33.1 | -32 | Start |
| 13 | 12 | 55 | -220 | | | End |
| 13 | 14 | 44 | 1 | 37 | -36 | Start |
| 13 | 17 | 27 | 39 | 37 | -21 | Debri on outer wall |
| 13 | 27 | 34 | -220 | 37 | | End |
| 13 | 32 | 04 | 1 | 40.9 | -36 | Start |
| 13 | 39 | 28 | | | | Missed 140° Azim view |
| 13 | 44 | 10 | -220 | 41 | | End |
| 13 | 45 | 46 | 0 | 44.9 | -96 | Start |
| 14 | 06 | 10 | -220 | 45 | | End |
| 14 | 07 | 45 | -1 | 49 | -86 | Start |
| 14 | 23 | 25 | -220 | 49 | | End |

# Video Review Record - Double-Shell Tank Annulus

Review Date: 08/05/93

Tank Number: 241-AZ-101-17F  Inspection Date: 07/26/93  Tape Number: 2

Reviewer: J. Harris (Print/Signature)

| Tape Time | | VCR | Complementary Information | | | Reviewer Comments |
|---|---|---|---|---|---|---|
| Hr | Min | Time (Min-Sec) | Azim. (Deg.) | Depth (ft.) | Tilt (Deg.) | |
| 14 | 26 | 22 | -1 | 52.9 | -87 | Start |
| 14 | 37 | 03 | -220 | 53 | | End |
| 14 | 39 | 54 | 0 | 54.6 | 7 | |
| 14 | 47 | 38 | -162 | 54.6 | -23 | No slot cut in steel ring for air passage way |
| 14 | 49 | 41 | | 54.6 | -17 | End |

# Video Review Record - Double-Shell Tank Annulus

Review Date: 08/13/93

Tank Number: 241-AZ-102-17F  Inspection Date: 07/27/93  Tape Number: 3

Reviewer: J. Harris/ J. Harris (Print/Signature)

| Tape Time | | VCR | Complementary Information | | | Reviewer Comments |
|---|---|---|---|---|---|---|
| Hr | Min | Time (Min-Sec) | Azim. (Deg.) | Depth (ft.) | Tilt (Deg.) | |
| 09 | 11 | 31 | 1 | 25 | -67 | Start |
| 09 | 33 | 48 | -220 | 27 | | End |
| 09 | 37 | 51 | 70 | 31 | -86 | Start (False Start) |
| 09 | 38 | 23 | 01 | 31 | -84 | Start |
| 09 | 55 | 01 | -220 | 31 | | End |
| 09 | 57 | 00 | 1 | 35.1 | -68 | Start |
| 10 | 14 | 00 | -220 | 35 | | End |
| 13 | 08 | 28 | 0 | 39 | 68 | Start |
| 13 | 21 | 32 | -209 | 39 | -67 | Outer wall - residue from site on wall |
| 13 | 23 | 50 | -220 | 39 | | End |
| 13 | 27 | 28 | 0 | 43 | -86 | Start |
| 13 | 41 | 49 | -220 | 43 | | End |
| 13 | 43 | 49 | -4 | 47 | -77 | Start |
| 13 | 53 | 15 | -140 | | | End, -160 Azm missed |
| 13 | 53 | 57 | -180 | | | Start |
| 13 | 57 | 42 | -220 | 47 | | End |

# Video Review Record - Double-Shell Tank Annulus

Review Date: 08/13/93

Tank Number: 241-AZ-102-17F  Inspection Date: 07/27/93  Tape Number: 3

Reviewer: J. Harris J. Harris (Print/Signature)

| Tape Time | | VCR | Complementary Information | | | Reviewer Comments |
|---|---|---|---|---|---|---|
| Hr | Min | Time (Min-Sec) | Azim. (Deg.) | Depth (ft.) | Tilt (Deg.) | |
| 14 | 01 | 25 | -1 | 51 | -66 | Start |
| 14 | 06 | 45 | -80 | 51 | -72 | No cut in steel ring for air slot |
| 14 | 14 | 47 | -220 | 51 | | End |
| 14 | 21 | 17 | -8 | 54.5 | -11 | Start |
| 14 | 33 | 42 | | | | End > cracks in concrete |

# Video Review Record - Double-Shell Tank Annulus

Review Date: 08/23/93

Tank Number: 241-AZ-102-17A  Inspection Date: 07/30/93  Tape Number: 4

Reviewer: J. Harris (Print/Signature)

| Tape Time | | VCR | Complementary Information | | | Reviewer Comments |
|---|---|---|---|---|---|---|
| Hr | Min | Time (Min-Sec) | Azim. (Deg.) | Depth (ft.) | Tilt (Deg.) | |
| 10 | 15 | 03 | 0 | 0 | -82 | Start |
| 10 | 16 | 02 | -1 | 0 | 17 | Outer wall - white deposit on wall, no explanation how deposit could be at this location |
| 10 | 16 | 58 | | 25 | | Depth corrected to 25ft |
| 10 | 27 | 53 | 200 | 25 | | End |
| 10 | 31 | 04 | 0 | 29 | -92 | Start |
| 10 | 41 | 47 | -200 | 29 | | End |
| 10 | 46 | 08 | 0 | 33 | -93 | Start |
| 10 | 56 | 58 | -200 | 33 | | End |
| 12 | 38 | 51 | 1 | 37 | -93 | Start |
| 12 | 52 | 24 | -200 | 37 | | End |
| 12 | 55 | 45 | 0 | 41 | -77 | Start |
| 13 | 06 | 38 | -200 | 41 | | End |
| 13 | 08 | 41 | 0 | 45 | 827 | Start |
| 13 | 19 | 52 | -200 | 45 | | End |
| 13 | 23 | 16 | 1 | 49 | 82 | Start |
| 13 | 39 | 01 | -200 | 49 | | End |

# Video Review Record - Double-Shell Tank Annulus

Review Date: 08/23/93

Tank Number: 241-AZ-102-17A  Inspection Date: 07/30/93  Tape Number: 4

Reviewer: J. Harris J. Harris (Print/Signature)

| Tape Time | | VCR | Complementary Information | | | Reviewer Comments |
|---|---|---|---|---|---|---|
| Hr | Min | Time (Min-Sec) | Azim. (Deg.) | Depth (ft.) | Tilt (Deg.) | |
| 13 | 41 | 50 | -1 | 53 | -84 | Start |
| 13 | 50 | 37 | -140 | 53 | -63 | No cut in steel ring for air passage way |
| 13 | 53 | 53 | -200 | 53 | | End |
| 13 | 57 | 27 | -1 | 55 | -6 | Start |
| 13 | 58 | 28 | -22 | 55 | 0 | Inner wall - lower knuckle - material adhering to surface |
| 14 | 11 | 14 | | | | End |

# ATTACHMENT 5

## Internal Memo, DCP-93-004
## Tank 101-AZ Annulus Smears

9413147.0328

Westinghouse
Hanford Company

Internal
Memo

From: System Structural Integrity Assessments DCP-93-004
Phone: 376-6164 H5-52
Date: August 3, 1993
Subject: TANK 101-AZ ANNULUS SMEARS

To: M. A. McLaughlin H5-09

cc: R. A. Dodd R1.51
S. D. Godfrey R1-51
D. J. Green H5-53
R. S. Popielarczyk R1-30
K. V. Scott H5-52 KVS
J. D. Thomson R1-30
DCP:File/LB

No contamination was detected during a survey of two smears that were taken from a suspect area on the primary tank. Two background smears were also surveyed and no contamination was detected.

The suspect area was viewed during remote visual examination on July 26, 1993. The examiner (myself) could not characterize the area. I decided to use a procedure that was included in the work package to smear any suspect areas. The remote camera system was equipped with a fiberglass rod and smear pad so the pad and the area being smeared were directly in front of the camera. The smears were taken on July 28. Solid contact was made during the smearing process. The smearing was recorded on a video cassette.

D C Pfluger

D. C. Pfluger
Senior Engineer

dcp:emw

9413147.0329



54-7600-081 (2/91) (EF) GEF074
Internal Letterhead (Extended)

# ATTACHMENT 6

## Savannah River Site Assessment

9413147.0330

WESTINGHOUSE SAVANNAH RIVER COMPANY
**DON'T SAY IT - WRITE IT**

September 8, 1993

To: D. C.(Dan) Pfluger
Westinghouse Hanford Co.
ETC 2 Bldg.
2920 George Washington Way
Richland WA 99352

From: W. R.(Billy) West W.R. West
Westinghouse Savannah River Co.
Bldg. 704-8H
Aiken, SC 29808

9413147.0331

**EVALUATION OF 241-AZ-101-17A INSPECTION VIDEO**

Fred McNatt and myself have reviewed the inspection video you sent us and offer the following comments:

- The "white stains" above and below several weld seams, while not an artifact common to SRS tanks, do not resemble leak sites in our tanks.
- While analysis of a sample of the material is the only way to determine what the stains are, the smear revealing no detectable contamination provides strong evidence that it is not leaked waste.
- During initial inspections of SRS tanks, many stains were smeared(using wet swipes) and sampled while establishing baseline conditions. Subsequent inspections are compared against known conditions. Changes in conditions are investigated and resolved.

Please call me at (803) 557-1939 if I can be of further assistance.

cc: M. S. Peters, 703-F
F. G. McNatt, 704-8H

# INFORMATION RELEASE REQUEST

References: WHC-CM-3-4

COMPLETE FOR ALL TYPES OF RELEASE

**Purpose**

- [ ] Speech or Presentation
  - [ ] Full Paper
  - [ ] Summary
  - [ ] Abstract
  - [ ] Visual Aid
  - (Check only one suffix)
- [ ] Speakers Bureau
- [ ] Poster Session
- [ ] Videotape
- [ ] Reference
- [X] Technical Report
- [ ] Thesis or Dissertation
- [ ] Manual
- [ ] Brochure/Flier
- [ ] Software/Database
- [ ] Controlled Database
- [ ] Other

New ID Number:

Existing ID Number (include revision, volume, etc.): WHC-SD-WM-ER-126, Rev. 0

If previously cleared, list ID number: N/A

Date Release Required: ASAP

Title: STRUCTURAL INTEGRITY EVALUATION OF 241-AW TANK FARM DANGEROUS WASTE STORAGE TANK FACILITIES

Unclassified Category: UC-

Impact Level: 3 ESQ

COMPLETE FOR SPEECH OR PRESENTATION

Title of Journal: N/A

Group or Society Sponsoring:

Date(s) of Conference or Meeting: N/A

City/State:

Will proceedings be published? [ ] Yes [ ] No

Will material be handed out? [ ] Yes [ ] No

Title of Conference or Meeting: N/A

CHECKLIST FOR SIGNATORIES

| Review Required per WHC-CM-3-4 | Yes | No | Reviewer Name (printed) | Signature | Date |
|---|---|---|---|---|---|
| Classification/Unclassified Controlled Nuclear Information | [ ] | [✓] | | | |
| Patent - General Counsel | [✓] | [ ] | SW BERGLIN | SWBergLin | 9/10/92 |
| Legal - General Counsel | [✓] | [ ] | | | |
| Applied Technology/Export Controlled Information or International Program | [ ] | [✓] | | | |
| WHC Program | [ ] | [✓] | | | |
| Communications | [ ] | [✓] | | | |
| DOE-RL Program | [ ] | [✓] | | | |
| Publication Services | [✓] | [ ] | L. Hermann | Linda Hermann | 9/14/92 |
| Other Program | [ ] | [✓] | | | |
| References Available to Intended Audience | [X] | [ ] | W J Karwoski | W.J. KARWOSKI | 9/8/92 |
| Transmit to DOE-HQ/Office of Scientific and Technical Information | [ ] | [✓] | | | |

Information conforms to all applicable requirements. The above information is certified to be correct.

Author/Requestor (Printed/Signature) Date

W J Karwoski 7/9/92

W. J. Karwoski, Principal Engineer
Equipment Stress Analysis

Responsible Manager (Printed/Signature) Date

R. B. Pan 7/9/92

R. B. Pan, Manager
Equipment Stress Analysis

Intended Audience

[ ] Internal [ ] Sponsor [X] External

INFORMATION RELEASE ADMINISTRATION APPROVAL STAMP

Stamp is required before release. Release is contingent upon resolution of mandatory comments.

APPROVED FOR RELEASE — OFFICIAL DOCUMENT — 105 — 9/14/92

Date Received 9/8/92

DEC 1993 RECEIVED EPIC

9413147.0332

BD-7600-062 (4/90) (EF) WEF074
Information Release Request

Part 1

# DISTRIBUTION SHEET

To: Tank Farms Technical Assessments (76225)

From: Waste Tank/Systems Integrity Assessments

Date:

Project Title/Work Order:

Structural Integrity Evaluation of AW Tank Farm Dangerous Waste Storage Tank Facilities/ N131N

EDT No.: 152998 ECN No.: N/A

| Name | MSIN | With Attachment | EDT/ECN & Comment | EDT/ECN Only |
|---|---|---|---|---|
| T. J. Conrads | H5-55 | X | | |
| K. O. Fein | H5-34 | X | | |
| D. J. Green | H5-53 | | | X |
| W. J. Karwoski | H5-53 | X | | |
| M. A. McLaughlin | H5-09 | X | | |
| D. A. Moody | H5-58 | X | | |
| T. L. Moore | H5-09 | X | | |
| R. B. Pan | H5-53 | | | X |
| D. C. Pfluger | H5-52 | X | | |
| L. Ruffin | R2-95 | X | | |
| K. V. Scott | H5-52 | X | | |
| Central Files | 18-04 | 2 | | |

9413147.0333

OCT 1993
RECEIVED
Becky A. Austin