1251146
[0063819]

HNF-EP-0182
Revision 372

Waste Tank Summary Report for Month Ending December 31, 2018

Prepared for the U.S. Department of Energy
Assistant Secretary for Environmental Management

Contractor for the U.S. Department of Energy
Office of River Protection under Contract DE-AC27-08RV14800

P.O. Box 850
Richland, Washington

DOCUMENT RELEASE AND CHANGE FORM

Prepared For the U.S. Department of Energy, Assistant Secretary for Environmental Management
By Washington River Protection Solutions, LLC., PO Box 850, Richland, WA 99352
Contractor For U.S. Department of Energy, Office of River Protection, under Contract DE-AC27-08RV14800

TRADEMARK DISCLAIMER: Reference herein to any specific commercial product, process, or service by trade name, trademark, manufacturer, or otherwise, does not necessarily constitute or imply its endorsement, recommendation, or favoring by the United States government or any agency thereof or its contractors or subcontractors. Printed in the United States of America.

Release Stamp

DATE: Feb 14, 2019 HANFORD RELEASE

1. **Doc No:** HNF-EP-0182 **Rev.** 372

2. **Title:**
Waste Tank Summary Report for Month Ending December 31, 2018

3. **Project Number:** ☒ N/A

4. **Design Verification Required:** ☐ Yes ☒ No

5. **USQ Number:** ☒ N/A RPP-27195

6. **PrHA Number** **Rev.** ☒ N/A

Clearance Review Restriction Type: public

7. **Approvals**

Title	Name	Signature	Date
Clearance Review	Aardal, Janis D	*Aardal, Janis D*	02/14/2019
Document Control Approval	Hood, Evan	*Hood, Evan*	02/14/2019
Originator	Templeton, Andrew M	*Templeton, Andrew M*	01/23/2019
Other Approver	Rodgers, Matt J	*Rodgers, Matt J*	01/23/2019
Other Approver	Schofield, John	*Schofield, John*	01/24/2019
Responsible Manager	Baune, Heather L	*Baune, Heather L*	01/24/2019

8. **Description of Change and Justification**

Complete Revision – Tables and text updated each month to reflect revised status.

DOE-ORP requires this document to be revised and issued monthly.

9. **TBDs or Holds** ☒ N/A

10. **Related Structures, Systems, and Components**

a. **Related Building/Facilities** ☒ N/A
b. **Related Systems** ☒ N/A
c. **Related Equipment ID Nos. (EIN)** ☒ N/A

11. **Impacted Documents – Engineering** ☒ N/A

Document Number	Rev.	Title

12. **Impacted Documents (Outside SPF):**

N/A

13. **Related Documents** ☒ N/A

Document Number	Rev.	Title

14. **Distribution**

Name	Organization
Baide, Dan	PROCESS & INTEGRITY ENG
Baune, Heather L	TNK WST INVENTORY & CHARACTZTN
Diedesch, Samuel J	TNK WST INVENTORY & CHARACTZTN
Kadinger, Jennifer A	TNK WST INVENTORY & CHARACTZTN
Luke, Scott N	TNK WST INVENTORY & CHARACTZTN
Mendoza, Ruben E	TANK & PIPELINE INTEGRITY
Menjivar, Carolina E	TNK WST INVENTORY & CHARACTZTN
Murry, Wendy I	RECORDS SUPPORT DLA
Nguyen, Duc M	TNK WST INVENTORY & CHARACTZTN
Pappas, Alexander D	CLOSURE & INTERIM MEASURES
Piepenbring, Ben R	TANK & PIPELINE INTEGRITY
Rasmussen, Juergen H	TNK WST INVENTORY & CHARACTZTN
Rodgers, Matt J	TNK WST INVENTORY & CHARACTZTN
Schofield, John	TANK & PIPELINE INTEGRITY
Tannahill, Chris L	242-A/AW MAINTENANCE
Templeton, Andrew M	TNK WST INVENTORY & CHARACTZTN
Vanderveer, Bradley J	TNK WST INVENTORY & CHARACTZTN
Washenfelder, Dennis	TANK & PIPELINE INTEGRITY

INFORMATION CLEARANCE REVIEW AND RELEASE APPROVAL

Part I: Background Information

Title: Waste Tank Summary Report for Month Ending December 31, 2018

Publish to OSTI? ☐ Yes ☑ No

Information Category:
☐ Abstract ☐ Journal Article ☐ Summary
☐ Internet ☐ Visual Aid ☐ Software
☐ Full Paper ☑ Report ☐ Other

Trademark/Copyright "Right to Use" Information or Permission Documentation	Yes	NA
	☐	☑

Document Number: HNF-EP-0182 Revision 372 Date: January 2018

Author: Templeton, Andrew M

Part II: External/Public Presentation Information

Conference Name:

Sponsoring Organization(s): N/A

Date of Conference: Conference Location:

Will Material be Handed Out? ☐ Yes ☑ No Will Information be Published? ☐ Yes ☑ No *(If Yes, attach copy of Conference format instructions/guidance.)*

Part III: WRPS Document Originator Checklist

Description	*Yes*	*N/A*	*Print/Sign/Date*		
Information Product meets requirements in TFC-BSM-AD-C-01?	☐	☑			
Document Release Criteria in TFC-ENG-DESIGN-C-25 completed? (Attach checklist)	☑	☐	Templeton, Andrew M	02/14/2019	IDMS Data File att.
If product contains pictures, safety review completed?	☑	☐	Sheryl Roberts	01/16/2019	IDMS Data File att.

Part IV: WRPS Internal Review

Function	*Organization*	*Date*	*Print Name/Signature/Date*	
Subject Matter Expert	WRPS	02/14/2019	Templeton, Andrew M	IDMS Data File att.
Responsible Manager	WRPS	01/16/2019	Baune, Heather L	IDMS Data File att.
Other:				

Part V: IRM Clearance Services Review

Description	*Yes*	*No*	*Print Name/Signature*
Document Contains Classified Information?	☐	☒	If Answer is "Yes," ADC Approval Required Print Name/Signature/Date
Document Contains Information Restricted by DOE Operational Security Guidelines?	☐	☒	Reviewer Signature: Print Name/Signature/Date
Document is Subject to Release Restrictions? *If the answer is "Yes," please mark category at right and describe limitation or responsible organization below:*	☐	☒	Document contains: ☐ Applied Technology ☐ Protected CRADA ☐ Personal/Private ☐ Export Controlled ☐ Proprietary ☐ Procurement – Sensitive ☐ Patentable Info. ☐ OUO ☐ Predecisional Info. ☐ UCNI ☐ Restricted by Operational Security Guidelines ☐ Other (Specify)
Additional Comments from Information Clearance Specialist Review?	☐	☒	Information Clearance Specialist Approval APPROVED By Janis D. Aardal at 9:43 am, Feb 14, 2019 Print Name/Signature/Date

When IRM Clearance Review is Complete – Return to WRPS Originator for Final Signature Routing (Part VI)

INFORMATION CLEARANCE REVIEW AND RELEASE APPROVAL

Part VI: Final Review and Approvals

Description	*Approved for Release*		*Print Name/Signature*
	Yes	*N/A*	
WRPS External Affairs	☒	☐	IDMS Data File att. Britton, John C
WRPS Office of Chief Counsel	☒	☐	IDMS Data File att. Roden, Mari L
DOE – ORP Public Affairs/Communications	☒	☐	IDMS Data File att. Davis, Tonja-Maree
Other: ORP SME	☒	☐	IDMS Data File att. Johnson, Jeremy M
Other:	☐	☐	

Comments Required for WRPS-Indicate Purpose of Document:

This report is the official inventory for radioactive waste stored in underground tanks in the 200 Areas at the Hanford Site. Data that depict the status of stored radioactive waste and tank vessel integrity are contained within the report. This report provides data on each of the existing 177 large underground waste storage tanks and smaller miscellaneous underground storage tanks (MUST) and special surveillance facilities, and supplemental information regarding tank surveillance anomalies and ongoing investigations. This report is intended to meet the requirement of DOE O 435.1, Radioactive Waste Management, requiring the reporting of tank waste volumes and space utilization for the Hanford Site tank farms.

APPROVED
By Janis D. Aardal at 9:43 am, Feb 14, 2019

Approved for Public Release; Further Dissemination Unlimited

Information Release Station

Was/Is Information Product Approved for Release? ☒ Yes ☐ No

If Yes, what is the Level of Releaser? ☑ Public/Unrestricted ☐ Other (Specify) _____

Date Information Product Stamped/Marked for Release: 02/14/2019

Was/Is Information Product Transferred to OSTI? ☐ Yes ☒ No

Forward Copies of Completed Form to WRPS Originator

```
- <workflow name="(JDA) Expedite - HNF-EP-0182 Rev372_WTSR 12/31/18"
    id="235361786">
  - <task name="Clearance Process" id="0" date-initiated="20190116T0630"
      performer="Janis D Aardal" performer-id="267960" username="h0090683">
      <comments>ATTN - Due Tuesday, 1/22/19 - 3:00 PM Please approve the monthly
        revised, Waste Tank Summary Report for Month Ending December 31, 2018, by
        Andrew Templeton for public release. Thank you, Janis Aardal Information
        Clearance</comments>
    </task>
    <task name="Add XML" id="1" date-done="20190116T0630" />
    <task name="Expedite - Manager Approval" id="6" date-due="20190118T0630" date-
      done="20190116T0940" performer="Heather L Baune" performer-id="141017875"
      username="h2790307" disposition="Approve" authentication="true" />
    <task name="Expedite - Document Reviewer1" id="16" date-due="20190118T0940"
      date-done="20190116T1009" performer="John C Britton" performer-id="63214817"
      username="h0084103" disposition="Public Release" authentication="true" />
    <task name="Expedite - Document Reviewer3" id="18" date-due="20190118T0940"
      date-done="20190116T1028" performer="Sheryl K Roberts" performer-id="171787680"
      username="h0081997" disposition="Public Release" authentication="true" />
  - <task name="Expedite - Document Reviewer2" id="17" date-due="20190118T0940"
      date-done="20190204T0956" performer="Mari L Roden" performer-id="179713158"
      username="h0048955" disposition="Public Release" authentication="true">
      <comments>Page 48. "November" is misspelled.</comments>
    </task>
  - <task name="Doc Owner Clearance Review" id="13" date-due="20190205T0956" date-
      done="20190204T1227" performer="Andrew M Templeton" performer-id="1078791"
      username="h0091402" disposition="Send On" authentication="true">
      <comments>Corrected the misspelled word on Page 48. Approved to move on to
        ORP for approval.</comments>
    </task>
    <task name="Milestone 1" id="24" date-done="20190204T1228" />
  - <task name="ORP Document Reviewer1" id="57" date-due="20190206T1227" date-
      done="20190214T0831" performer="Tonja-Maree Davis" performer-id="181732204"
      username="h2711692" disposition="Public Release" authentication="true">
      <reviewer performer="Jeremy M Johnson" performer-id="140884110"
        username="h6255457" />
      <comments>Reviewer's Comments Date: 02/12/2019 12:09 PM Step Name: HNF-
        EP-0182 Revision 372 Waste Tank Summary Report for Month Ending December
        31, 2018 Performer: Johnson, Jeremy (h6255457) No comment</comments>
    </task>
  - <task name="Doc Owner Reviews ORP Comments" id="61" date-due="20190215T0831"
      date-done="20190214T0841" performer="Andrew M Templeton" performer-
      id="1078791" username="h0091402" disposition="Send On" authentication="true">
      <comments>No ORP comments to incorporate.</comments>
    </task>
    <task name="Milestone 2" id="62" date-done="20190214T0842" />
    <task name="Verify Doc Consistency" id="4" date-due="20190215T0842" date-
      done="20190214T0931" performer="Janis D Aardal" performer-id="267960"
      username="h0090683" disposition="Cleared" authentication="true" />
  </workflow>
```

HNF-EP-0182, Rev. 372

WASTE TANK SUMMARY REPORT FOR MONTH ENDING DECEMBER 31, 2018

A. M. Templeton

WASHINGTON RIVER PROTECTION SOLUTIONS
Richland, WA 99352
U.S. Department of Energy Contract DE-AC27-08RV14800

EDT/ECN:	DRCF	UC:	N/A
Cost Center:	2KL00	Charge Code:	202851
B&R Code:	N/A	Total Pages:	73

Key Words: MONTHLY REPORT, WASTE TANK SUMMARY, DST, SST

Abstract: This report is the official inventory for radioactive waste stored in underground tanks in the 200 Areas at the Hanford Site. Data that depict the status of stored radioactive waste and tank vessel integrity are contained within the report. This report is intended to meet the requirement of DOE O 435.1, Radioactive Waste Management, requiring the reporting of tank waste volume inventories and space utilization for the Hanford Site tank farms.

TRADEMARK DISCLAIMER. Reference herein to any specific commercial product, process, or service by trade name, trademark, manufacturer, or otherwise, does not necessarily constitute or imply its endorsement, recommendation, or favoring by the United States Government or any agency thereof or its contractors or subcontractors.

DATE:
Feb 14, 2019
HANFORD RELEASE

APPROVED
By Janis D. Aardal at 11:30 am, Feb 14, 2019

Release Approval Date Release Stamp

Approved For Public Release

RECORD OF REVISION

Date	Revision	Description	Changed by
1/24/2001	153	EDT-631372	B. M. Hanlon
Record of revision truncated for brevity			
4/26/2017	351	Complete revision	A. M. Templeton
6/6/2017	352	Complete revision	A. M. Templeton
6/28/2017	353	Complete revision	A. M. Templeton
7/28/2017	354	Complete revision	A. M. Templeton
8/24/2017	355	Complete revision	A. M. Templeton
9/27/2017	356	Complete revision	A. M. Templeton
10/26/2017	357	Complete revision	A. M. Templeton
11/28/2017	358	Complete revision	A. M. Templeton
12/21/2017	359	Complete revision	A. M. Templeton
1/25/2018	360	Complete revision	M. J. Rodgers
2/26/2018	361	Complete revision	A. M. Templeton
3/28/2018	362	Complete revision	A. M. Templeton
4/25/2018	363	Complete revision	A. M. Templeton
5/31/2018	364	Complete revision	A. M. Templeton
6/20/2018	365	Complete revision	A. M. Templeton
7/30/2018	366	Complete revision	A. M. Templeton
8/28/2018	367	Complete revision	A. M. Templeton
9/26/2018	368	Complete revision	A. M. Templeton
10/31/2018	369	Complete revision	A. M. Templeton
11/28/2018	370	Complete revision	A. M. Templeton
12/27/2018	371	Complete revision	A. M. Templeton
2/4/2019	372	Complete revision	A. M. Templeton

This page intentionally left blank.

HNF-EP-0182
Revision 372

Waste Tank Summary Report for Month Ending December 31, 2018

A.M. Templeton
Washington River Protection Solutions, LLC

Date Published
February 2019

Prepared for the U.S. Department of Energy
Assistant Secretary for Environmental Management

Contractor for the U.S. Department of Energy
Office of River Protection under Contract DE-AC27-08RV14800

P.O. Box 850
Richland, Washington

Approved for Public Release; Further Dissemination Unlimited

TRADEMARK DISCLAIMER

Reference herein to any specific commercial product, process, or service by trade name, trademark, manufacturer, or otherwise, does not necessarily constitute or imply its endorsement, recommendation, or favoring by the United States Government or any agency thereof or its contractors or subcontractors.

This report has been reproduced from the best available copy. Available in paper copy.

Printed in the United States of America

CONTENTS

1.0 PURPOSE AND SCOPE 1
1.1 Description of Table 1-1 Changes from Last Report 2
2.0 TANK WASTE RETRIEVAL STATUS HIGHLIGHTS 9
3.0 DOUBLE-SHELL TANKS MONTHLY SUMMARY TABLES 11
4.0 SINGLE-SHELL TANKS MONTHLY SUMMARY TABLES 15
4.1 Leak Volume Estimates 21
4.2 Water Intrusion in Single-Shell Tanks 24
5.0 MISCELLANEOUS UNDERGROUND STORAGE TANKS AND SPECIAL SURVEILLANCE FACILITIES 27
6.0 ENDNOTES AND REFERENCES 33
6.1 Report Endnotes 33
6.2 References 43

APPENDIX

APPENDIX A – GLOSSARY A-1

FIGURES

Figure 1-1. Double-Shell Tank Configuration....3
Figure 1-2. Single-Shell Tank Configuration....3
Figure 1-3. 200 East Area Tank Waste Contents....5
Figure 1-4. 200 West Area Tank Waste Contents....7

TABLES

Table 1-1. Waste Tank Summary – December 31, 2018....2
Table 2-1. Tanks in Retrieval Status....9
Table 3-1. Inventory and Status by Tanks – Double-Shell Tanks (2 pages)....11
Table 3-2. Double-Shell Tank Space Allocation, Inventory and Waste Receipts....13
Table 4-1. Inventory and Status by Tanks – Single-Shell Tanks (6 pages)....15
Table 4-2. SST Leak Volume Estimates (3 pages)....21
Table 4-3. DST Leak Volume Estimates....23
Table 4-4. Single-Shell Tanks with Confirmed Water Intrusion....24
Table 4-5. Single-Shell Tanks with Evidence of Recent Water Intrusion....25
Table 5-1. 200 East Area Miscellaneous Underground Storage Tanks and Special Surveillance Facilities (3 pages)....27
Table 5-2. 200 West Area Miscellaneous Underground Storage Tanks and Special Surveillance Facilities (3 pages)....30
Table 6-1. Waste Tank Summary Report Endnotes (10 pages)....33

TERMS

Acronyms

BBI	best-basis inventory
DCRT	double-contained receiver tank
DOE	U.S. Department of Energy
DST	double-shell tank
Ecology	State of Washington, Department of Ecology
HEPA	high-efficiency particulate air
HVAC	heating, ventilation, and air conditioning
MUST	miscellaneous underground storage tank
ORP	U.S. Department of Energy, Office of River Protection
OSD	operating specifications document
PUREX	plutonium/uranium extraction
RECUPLEX	recovery of uranium and plutonium by extraction
REDOX	reduction-oxidation
SST	single-shell tank
TWINS	Tank Waste Information Network System
WAC	Washington Administrative Code
WRPS	Washington River Protection Solutions LLC
WTP	Waste Treatment and Immobilization Plant
WVR	waste volume reduction

Units

ft	feet
gal	gallon
in.	inch
kgal	thousand gallons
Mgal	million gallons
min	minute
mo	month

This page intentionally left blank.

1.0 PURPOSE AND SCOPE

This report is the official inventory for radioactive waste stored in underground tanks in the 200 Areas at the Hanford Site. Data that depict the status of stored radioactive waste and tank vessel integrity are contained within the report. This report provides data on each of the existing 177 large underground waste storage tanks and smaller miscellaneous underground storage tanks (MUST) and special surveillance facilities, and supplemental information regarding tank surveillance anomalies and ongoing investigations. This report is intended to meet the requirement of DOE O 435.1, *Radioactive Waste Management*, requiring the reporting of tank waste volumes and space utilization for the Hanford Site tank farms.

Throughout this report, individual tanks and tank farms are referred to without the “241” preceding the tank/tank farm designator (e.g., Tank 241-C-102 is referred to as Tank C-102, and 241-A Tank Farm is referred to as A Farm).

1.1 DESCRIPTION OF TABLE 1-1 CHANGES FROM LAST REPORT

Table 1-1 summarizes the DST and SST information available in subsequent detailed tables, and identifies changes in tank and waste status that have occurred during the report period. All table endnotes are included in Section 6.1.

Table 1-1. Waste Tank Summary – December 31, 2018

Double-shell tanks	**Sound DSTs**			**DSTs with Primary Tank Leak[1]**			**DSTs with Secondary Tank Leak**		
	1 year ago	**1 mo. ago**	**Current**	**1 year ago**	**1 mo. ago**	**Current**	**1 year ago**	**1 mo. ago**	**Current**
	27	**27**	**27**	**1**	**1**	**1**	**0**	**0**	**0**
	DST Storage Capacity (Mgal)			**Waste Stored in DSTs (Mgal)**			**Available DST Storage Space (Mgal)**		
	1 year ago	**1 mo. ago**	**Current**	**1 year ago**	**1 mo. ago**	**Current**	**1 year ago**	**1 mo. ago**	**Current**
	31.5	**31.6**	**31.6**	**25.5**	**25.2**	**25.2**	**3.6**	**4.0**	**4.0**
Single-shell tanks	**Sound SSTs**			**Assumed Leaker SSTs**			**SSTs with Known Active Leaks**		
	1 year ago	**1 mo. ago**	**Current**	**1 year ago**	**1 mo. ago**	**Current**	**1 year ago**	**1 mo. ago**	**Current**
	88	**89**	**89**	**61**	**60**	**60**	**1**	**1**	**1**
	Total Waste Stored in SSTs (Mgal)			**SSTs in Formal Leak Assessment**			**SSTs with Intrusions**		
	1 year ago	**1 mo. ago**	**Current**	**1 year ago**	**1 mo. ago**	**Current**	**1 year ago**	**1 mo. ago**	**Current**
	28.6	**28.6**	**28.6**	**1**	**1**	**2**	**21**	**22**	**24**
	SSTs in Retrieval[4]			**Retrieval Operations Complete[5]**			**Retrieval Operations Complete and in Review[6]**		
	1 year ago	**1 mo. ago**	**Current**	**1 year ago**	**1 mo. ago**	**Current**	**1 year ago**	**1 mo. ago**	**Current**
	1	**0**	**0**	**15**	**16**	**16**	**1**	**1**	**1**

DST = double-shell tank. SST = single-shell tank.

Changes in the tank waste summaries listed in Table 1-1 from the previous revision of this report are summarized below.

- Based on in-tank video inspections and level data evaluation, single-shell tanks B-103 and BX-104 are determined to have intrusions.
- A formal leak assessment is currently being performed on single-shell tank SX-104.

Illustrations of the double-shell tank (DST) and single-shell tank (SST) configurations are shown in Figure 1-1 and Figure 1-2, respectively. Figure 1-3 and Figure 1-4 summarize the 200 East Area and 200 West Area tank contents by tank farm.

Figure 1-1. Double-Shell Tank Configuration

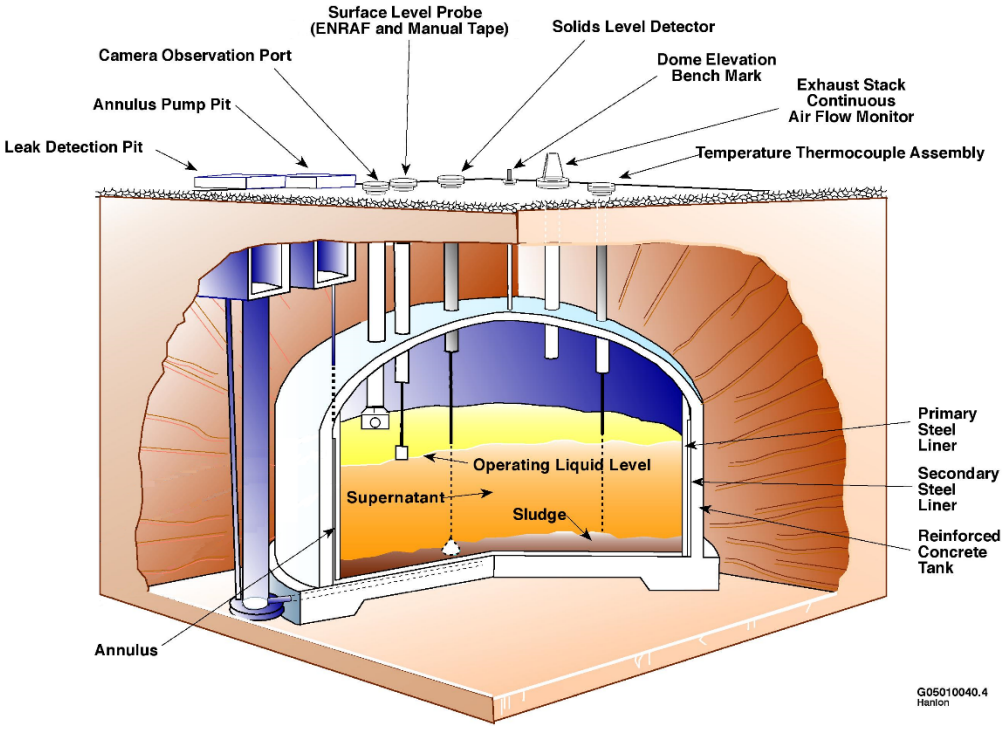

Figure 1-2. Single-Shell Tank Configuration

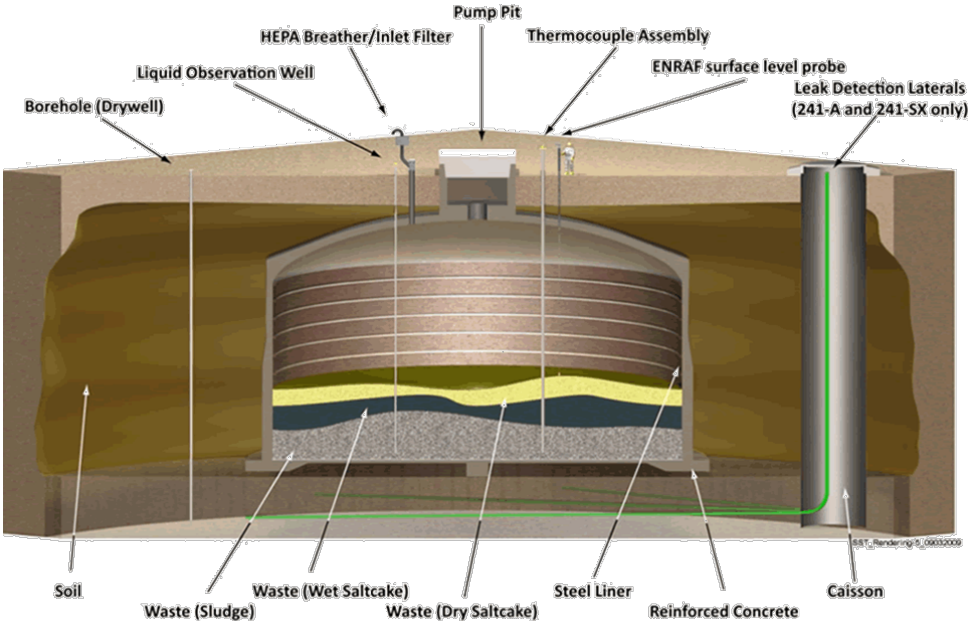

This page intentionally left blank.

Figure 1-3. 200-East Tank Waste Contents

A-Tank Farm- Constructed 1953-1955
6 @ 1,000 Kgal Tank Capacity, Single-Shell

Tank	Sludge (Kgal)	Saltcake (Kgal)	Supernatant (Kgal)
241-A-101	3	329	0
241-A-102	0	38	2
241-A-103	2	376	10
241-A-104 ■	25	0	0
241-A-105 ■	20	0	0
241-A-106	50	29	0

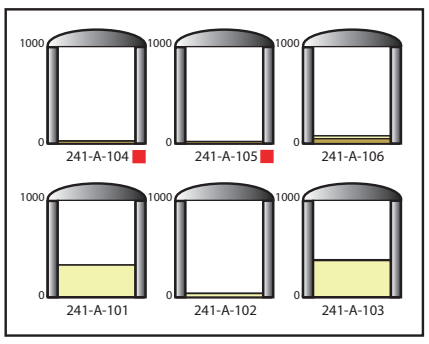

AN-Tank Farm- Constructed 1977-1980
7 @ 1,160 Kgal Tank Capacity, Double-Shell

Tank	Sludge (Kgal)	Saltcake (Kgal)	Supernatant (Kgal)
241-AN-101	635	30	196
241-AN-102	0	159	885
241-AN-103	0	510	452
241-AN-104	0	491	556
241-AN-105	0	536	586
241-AN-106	488	17	345
241-AN-107	0	240	824

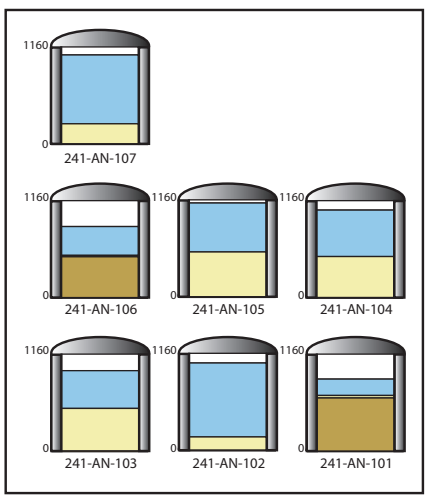

AP-Tank Farm- Constructed 1982-1986
1 @ 1,160 Kgal Tank Capacity, Double-Shell
7 @ 1,257 Kgal Tank Capacity, Double-Shell

Tank	Sludge (Kgal)	Saltcake (Kgal)	Supernatant (Kgal)
241-AP-101	0	33	1197
241-AP-102	165	0	216
241-AP-103	0	48	1076
241-AP-104	0	88	308
241-AP-105	0	102	1133
241-AP-106	0	0	430
241-AP-107	0	63	1093
241-AP-108	0	111	988

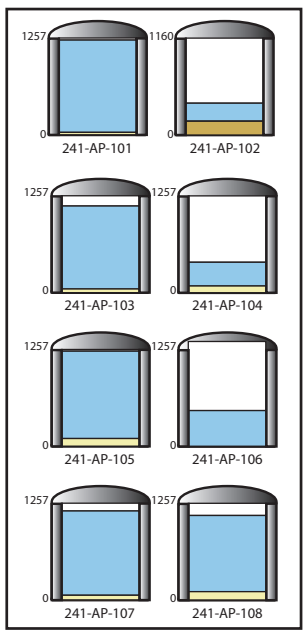

AW-Tank Farm- Constructed 1976-1980
6 @ 1,160 Kgal Tank Capacity, Double-Shell

Tank	Sludge (Kgal)	Saltcake (Kgal)	Supernatant (Kgal)
241-AW-101	0	405	731
241-AW-102	0	58	741
241-AW-103	281	40	751
241-AW-104	81	157	802
241-AW-105	248	0	686
241-AW-106	0	266	872

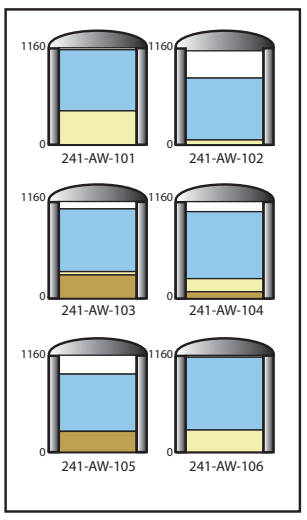

AX-Tank Farm- Constructed 1963-1965
4 @ 1,000 Kgal Tank Capacity, Single-Shell

Tank	Sludge (Kgal)	Saltcake (Kgal)	Supernatant (Kgal)
241-AX-101	2	318	0
241-AX-102	6	24	1
241-AX-103	8	96	1
241-AX-104	5	0	0

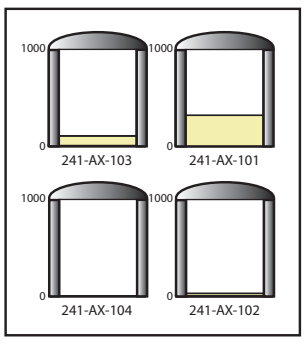

AY-Tank Farm- Constructed 1968-1970
2 @ 1,018 Kgal Tank Capacity, Double-Shell

Tank	Sludge (Kgal)	Saltcake (Kgal)	Supernatant (Kgal)
241-AY-101	105	0	837
241-AY-102 ■	8	0	3

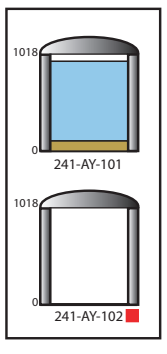

AZ-Tank Farm- Constructed 1970-1974
2 @ 1,018 Kgal Tank Capacity, Double-Shell

Tank	Sludge (Kgal)	Saltcake (Kgal)	Supernatant (Kgal)
241-AZ-101	52	0	875
241-AZ-102	104	0	691

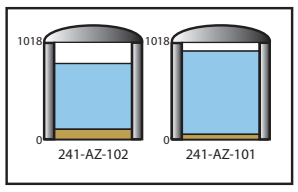

B-Tank Farm- Constructed 1943-1944
12 @ 530 Kgal Tank Capacity, Single-Shell
4 @ 55 Kgal Tank Capacity, Single-Shell

Tank	Sludge (Kgal)	Saltcake (Kgal)	Supernatant (Kgal)
241-B-101 ■	28	76	0
241-B-102	0	27	4
241-B-103 ■	1	51	0
241-B-104	309	60	0
241-B-105 ■	28	261	0
241-B-106	116	0	1
241-B-107 ■	84	72	0
241-B-108	27	58	0
241-B-109	50	71	2
241-B-110 ■	244	0	0
241-B-111 ■	215	0	5
241-B-112 ■	14	17	2
241-B-201 ■	29	0	0.3
241-B-202	27	0	2
241-B-203 ■	49	0	1
241-B-204 ■	48	0	2

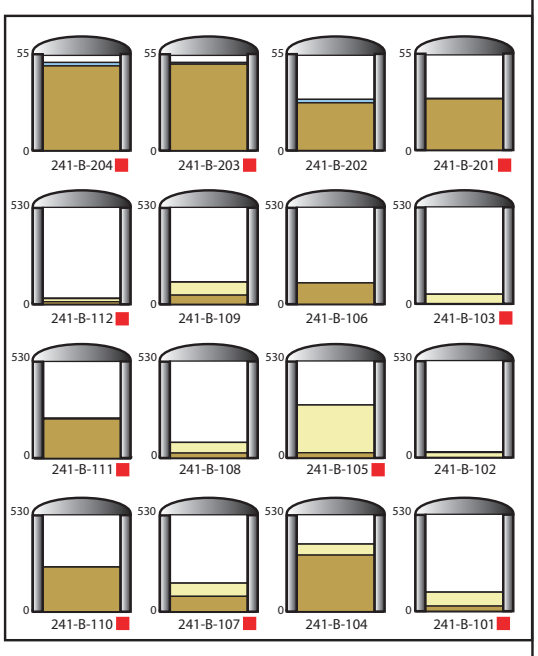

BX- Tank Farm- Constructed 1946-1947
12 @ 530 Kgal Tank Capacity, Single-Shell

Tank	Sludge (Kgal)	Saltcake (Kgal)	Supernatant (Kgal)
241-BX-101 ■	43	0	9
241-BX-102 ■	89	0	0
241-BX-103	62	0	11
241-BX-104	93	0	4
241-BX-105	42	28	0
241-BX-106	10	28	0
241-BX-107	344	0	0
241-BX-108 ■	30	0	0
241-BX-109	189	0	0
241-BX-110 ■	65	141	6
241-BX-111 ■	30	94	0
241-BX-112	158	0	0

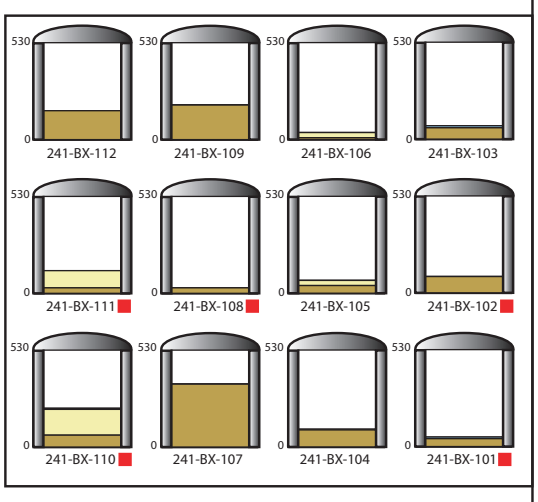

BY-Tank Farm- Constructed 1948-1949
12 @ 758 Kgal Tank Capacity, Single-Shell

Tank	Sludge (Kgal)	Saltcake (Kgal)	Supernatant (Kgal)
241-BY-101	37	329	0
241-BY-102	0	316	0
241-BY-103 ■	9	403	0
241-BY-104	43	358	0
241-BY-105 ■	48	429	0
241-BY-106 ■	30	399	0
241-BY-107 ■	16	258	0
241-BY-108 ■	44	172	0
241-BY-109	23	273	0
241-BY-110	44	304	0
241-BY-111	0	399	0
241-BY-112	2	284	0

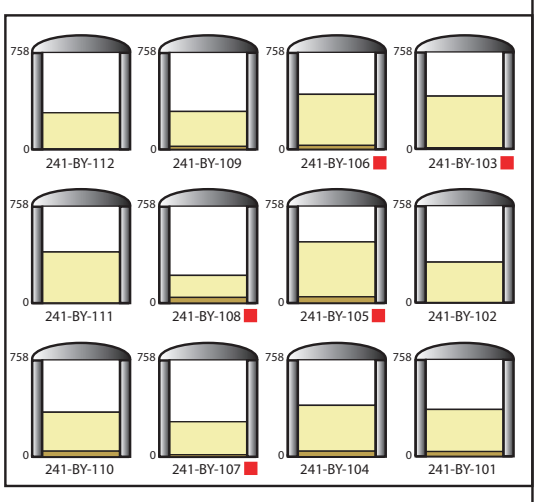

C-Tank Farm- Constructed 1943-1944
12 @ 530 Kgal Tank Capacity, Single-Shell
4 @ 55 Kgal Tank Capacity, Single-Shell

Tank	Sludge (Kgal)	Saltcake (Kgal)	Supernatant (Kgal)
241-C-101 ■	5.5	0	0
241-C-102	15.5	0	0
241-C-103	2.3	0	0.2
241-C-104	1.9	0	0
241-C-105 ■	1.5	0	0
241-C-106	2.7	0	0.1
241-C-107	10	0	0
241-C-108	3.4	0	0
241-C-109	2	0	0
241-C-110	2.1	0	0
241-C-111	4.9	0	0
241-C-112	10	0	0
241-C-201 ■	0.1	0	0
241-C-202 ■	0.1	0	0
241-C-203 ■	0.1	0	0
241-C-204 ■	0.1	0	0

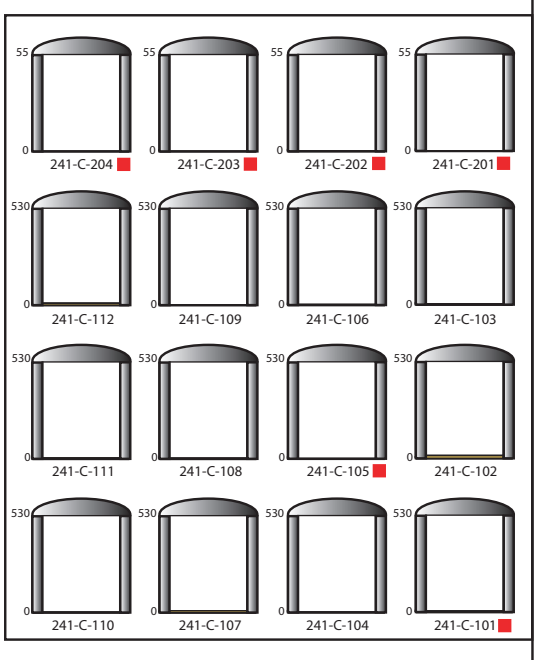

LEGEND: Sludge, Saltcake, Supernatant, Available Space, Assumed/Confirmed Leaker ■

A. M. Templeton
Data Derived From Waste Tank Summary Report Dated 12/31/2018

washington river protection solutions

Figure 1-4. 200-West Tank Waste Contents

S-Tank Farm- Constructed 1950-1951

12 @ 758 Kgal Tank Capacity, Single-Shell

Tank	Sludge (Kgal)	Saltcake (Kgal)	Supernatant (Kgal)
241-S-101	235	115	0
241-S-102	22	69	2
241-S-103	9	220	1
241-S-104	132	149	0
241-S-105	2	506	0
241-S-106	0	451	0
241-S-107	328	30	0
241-S-108	5	536	0
241-S-109	13	520	0
241-S-110	91	296	0
241-S-111	72	329	0
241-S-112	2.5	0	0.1

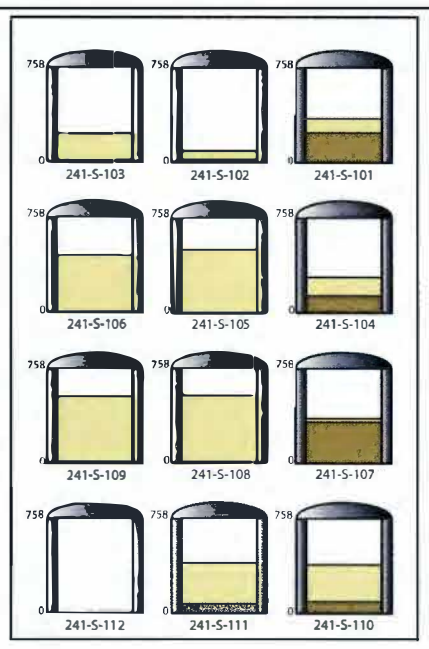

TX-Tank Farm- Constructed 1947-1948

18 @ 758 Kgal Tank Capacity, Single-Shell

Tank	Sludge (Kgal)	Saltcake (Kgal)	Supernatant (Kgal)
241-TX-101	73	14	0
241-TX-102	2	211	0
241-TX-103	0	144	0
241-TX-104	33	33	1
241-TX-105 ■	11	589	0
241-TX-106	5	386	0
241-TX-107 ■	0	27	0
241-TX-108	6	112	0
241-TX-109	359	0	0
241-TX-110 ■	37	425	0
241-TX-111	43	316	0
241-TX-112	0	627	0
241-TX-113 ■	88	546	0
241-TX-114 ■	4	518	0
241-TX-115 ■	8	536	0
241-TX-116 ■	66	499	0
241-TX-117 ■	29	597	0
241-TX-118	0	248	0

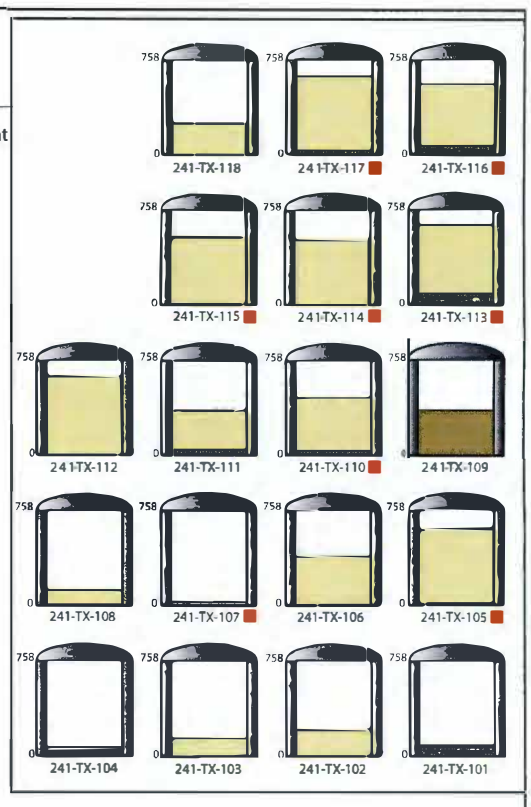

SX-Tank Farm- Constructed 1953-1955

15 @ 1,000 Kgal Tank Capacity, Single-Shell

Tank	Sludge (Kgal)	Saltcake (Kgal)	Supernatant (Kgal)
241-SX-101	141	275	0
241-SX-102	55	287	0
241-SX-103	80	519	0
241-SX-104	70	363	0
241-SX-105	63	313	0
241-SX-106	0	399	0
241-SX-107 ■	96	0	0
241-SX-108 ■	79	0	0
241-SX-109 ■	66	175	0
241-SX-110	49	9	0
241-SX-111 ■	97	20	0
241-SX-112 ■	77	0	0
241-SX-113 ■	19	0	0
241-SX-114 ■	127	31	0
241-SX-115 ■	4	0	0

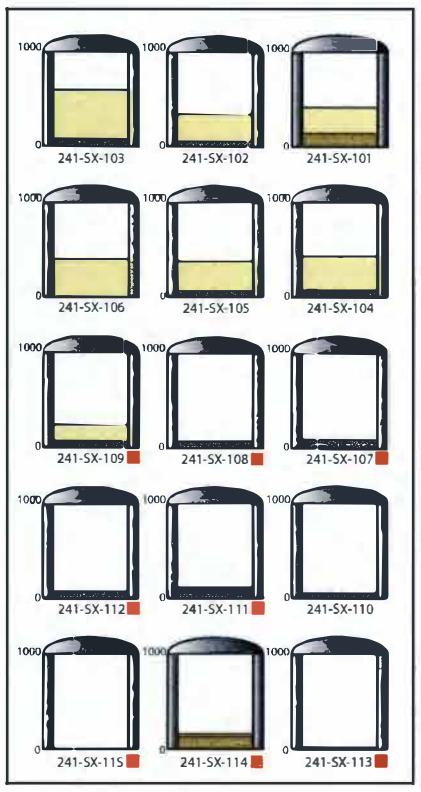

TY-Tank Farm- Constructed 1951-1952

6 @ 758 Kgal Tank Capacity, Single-Shell

Tank	Sludge (Kgal)	Saltcake (Kgal)	Supernatant (Kgal)
241-TY-101 ■	59	47	0
241-TY-102	0	61	9
241-TY-103 ■	101	51	0
241-TY-104 ■	41	0	1
241-TY-105 ■	187	0	0
241-TY-106 ■	13	0	0

SY-Tank Farm- Constructed 1974-1976

3 @ 1,160 Kgal Tank Capacity, Double-Shell

Tank	Sludge (Kgal)	Saltcake (Kgal)	Supernatant (Kgal)
241-SY-101	0	223	891
241-SY-102	220	0	320
241-SY-103	0	414	319

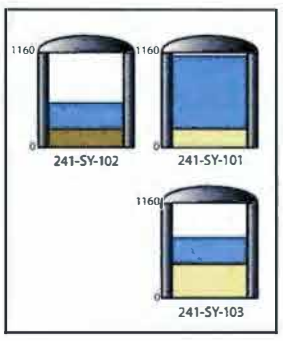

T-Tank Farm- Constructed 1943-1944

12 @ 530 Kgal Tank Capacity, Single-Shell
4 @ 55 Kgal Tank Capacity, Single-Shell

Tank	Sludge (Kgal)	Saltcake (Kgal)	Supernatant (Kgal)
241-T-101 ■	37	55	2
241-T-102	19	0	11
241-T-103 ■	23	0	3
241-T-104	310	0	0
241-T-105	92	0	0
241-T-106 ■	21	0	0
241-T-107 ■	161	0	5
241-T-108 ■	7	8	0
241-T-109 ■	0	98	0
241-T-110	369	0	1
241-T-111 ■	424	0	0
241-T-112	55	0	7
241-T-201	29	0	2
241-T-202	19	0	0
241-T-203	36	0	0
241-T-204	36	0	0

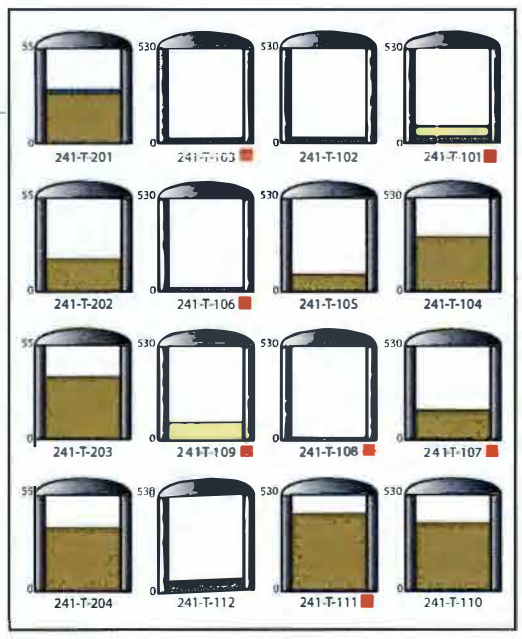

U-Tank Farm- Constructed 1943-1944

12 @ 530 Kgal Tank Capacity, Single-Shell
4 @ 55 Kgal Tank Capacity, Single-Shell

Tank	Sludge (Kgal)	Saltcake (Kgal)	Supernatant (Kgal)
241-U-101 ■	23	0	0
241-U-102	43	299	2
241-U-103	12	405	1
241-U-104 ■	45	39	0
241-U-105	32	318	0
241-U-106	0	163	2
241-U-107	16	261	0
241-U-108	29	399	0
241-U-109	32	369	0
241-U-110 ■	183	0	0
241-U-111	26	193	0
241-U-112 ■	43	0	0
241-U-201	4	0	1
241-U-202	4	0	1
241-U-203	2	0	1
241-U-204	2	0	1

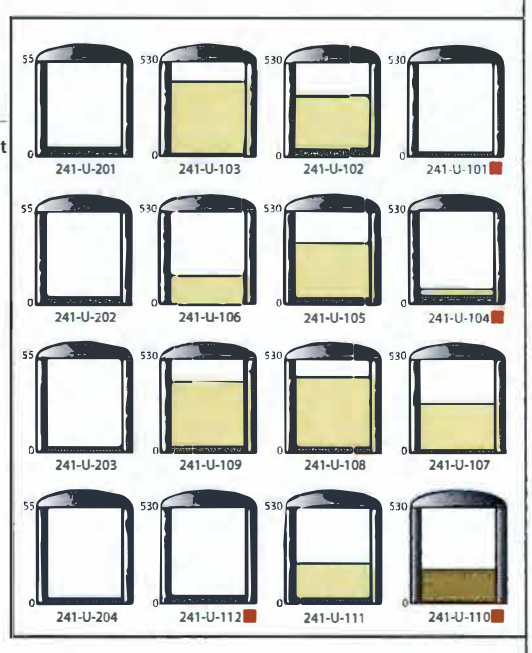

LEGEND: Sludge, Saltcake, Supernatant, Available Space, Assumed/Confirmed Leaker ■

A. M. Templeton
Data Derived From Waste Tank Summary Report Dated 12/31/2018
washington river protection solutions

2.0 TANK WASTE RETRIEVAL STATUS HIGHLIGHTS

The waste retrieval status of Hanford Tanks is summarized in Table 2-1.

Table 2-1. Tanks in Retrieval Status

Tank (241-)	Status[5]	Comments	Nominal Volume of Remaining Waste[8] (kgal)	Notes (see Section 6.1)
AY-102	Complete	Declared "Retrieved to Limit of First and Second Retrieval Technologies," 2/15/2017	11.0	(90)(5)
C-101	Complete	Declared "Retrieved to Limit of First and Second Retrieval Technologies," 9/25/2013	5.5	(5)(9)
C-102	Complete	Declared "Retrieved to Limit of First and Second Retrieval Technologies," 11/30/2015	15.5	(5)(10)
C-103	Complete	Declared "Retrieval Completed," 8/23/2006	2.5	(5)(11)
C-104	Complete	Declared "Retrieval Completed," 8/17/2012	1.9	(5)(12)
C-105	Complete	Declared "Retrieval Completed," 6/28/2018	1.5	(5)(13)
C-106	Complete/ In Review	Declared "Retrieval Completed," 12/31/2003	2.8	(6)(14)
C-107	Complete	Declared "Retrieved to Limit of Third Retrieval Technology," 9/30/2014	10.0	(5)(15)
C-108	Complete	Declared "Retrieved to Limit of Modified Sluicing Technology," 3/22/2012	3.4	(5)(16)
C-109	Complete	Declared "Retrieved to Limit of Modified Sluicing Technology," 9/12/2012	2.0	(5)(17)
C-110	Complete	Declared "Retrieval Completed," 10/30/2013	2.1	(5)(18)
C-111	Complete	Declared "Retrieval Completed," 8/29/2016	4.9	(5)(19)
C-112	Complete	Declared "Retrieval Completed," 5/29/2014	10.0	(5)(20)
C-201	Complete	Declared "Retrieval Completed," 3/23/2006	0.14	(5)(21)
C-202	Complete	Declared "Retrieval Completed," 8/11/2005	0.15	(5)(22)
C-203	Complete	Declared "Retrieval Completed," 3/24/2005	0.14	(5)(23)
C-204	Complete	Declared "Retrieval Completed," 12/11/2006	0.14	(5)(24)
S-112	Complete	Declared "Retrieval Completed," 3/2/2007	2.7	(5)(25)

This page intentionally left blank.

3.0 DOUBLE-SHELL TANKS MONTHLY SUMMARY TABLES

The DST waste inventory and tank status are summarized in Table 3-1. DST space allocation, inventory, and waste receipts are summarized in Table 3-2.

Table 3-1. Inventory and Status by Tanks – Double-Shell Tanks (2 pages)

All volume data obtained from Tank Waste Information Network System (TWINS)

Tank (241-)	Tank Integrity	Tank Level (in.)	Total Waste (kgal)	Available Space (kgal)	Waste volumes			Solids Volume Update
					Supernatant Liquid (kgal)	Sludge (kgal)	Saltcake (kgal)	
AN Farm Status								
AN-101	Sound	313	861	299	196	635	30	10/1/2018
AN-102	Sound	380	1044	116	885	0	159	4/1/2017
AN-103	Sound	350	962	198	452	0	510	10/1/2016
AN-104	Sound	381	1047	113	556	0	491	10/1/2016
AN-105	Sound	408	1122	38	586	0	536	10/1/2016
AN-106	Sound	309	850	310	345	488	17	8/1/2018
AN-107	Sound	387	1064	96	824	0	240	10/1/2018
7 tanks – Total			**6950**	**1170**	**3844**	**1123**	**1983**	
AP Farm Status								
AP-101	Sound	447	1230	27	1197	0	33	7/1/2015
AP-102	Sound	139	381	779	216	165	0	10/1/2018
AP-103	Sound	409	1124	133	1076	0	48	7/1/2018
AP-104	Sound	144	396	861	308	0	88	7/1/2018
AP-105	Sound	449	1235	22	1133	0	102	7/1/2016
AP-106	Sound	156	430	827	430	0	0	4/1/2018
AP-107	Sound	420	1156	101	1093	0	63	10/1/2018
AP-108	Sound	400	1099	158	988	0	111	7/1/2018
8 tanks – Total			**7051**	**2908**	**6441**	**165**	**445**	
AW Farm Status								
AW-101	Sound	413	1136	24	731	0	405	10/1/2016
AW-102	Sound	291	799	361	741	0	58	7/1/2018
AW-103	Sound	390	1072	88	751	281	40	10/1/2017
AW-104	Sound	378	1040	120	802	81	157	8/1/2018
AW-105	Sound	340	934	226	686	248	0	4/1/2017
AW-106	Sound	414	1138	22	872	0	266	9/1/2018
6 tanks – Total			**6119**	**841**	**4583**	**610**	**926**	

Table 3-1. Inventory and Status by Tanks – Double-Shell Tanks (2 pages)

All volume data obtained from Tank Waste Information Network System (TWINS)

Tank (241-)	Tank Integrity	Tank Level (in.)	Total Waste (kgal)	Available Space (kgal)	Waste volumes			Solids Volume Update
					Supernatant Liquid (kgal)	Sludge (kgal)	Saltcake (kgal)	
AY Farm Status								
AY-101	Sound	343	942	76	837	105	0	12/1/2018
AY-102	Assumed leaker; primary tank	N/A [a]	11 [a]	0 [a]	3	8	0	10/1/2018
2 tanks – Total			**953**	**76**	**840**	**113**	**0**	
AZ Farm Status								
AZ-101	Sound	337	927	91	875	52	0	7/1/2018
AZ-102	Sound	289	795	223	691	104	0	10/1/2017
2 tanks – Total			**1722**	**314**	**1566**	**156**	**0**	
SY Farm Status								
SY-101	Sound	405	1114	46	891	0	223	9/1/2016
SY-102	Sound	196	540	620	320	220	0	4/1/2018
SY-103	Sound	267	733	427	319	0	414	4/1/2018
3 tanks – Total			**2387**	**1093**	**1530**	**220**	**637**	

Notes:

- 1 kgal differences are the result of computer rounding.
- Supernatant + sludge (includes liquid) + saltcake (includes liquid) = total waste.
- Available space volumes include restricted space.
- Tanks AN-103, AN-104, AN-105, AW-101, SY-101, and SY-103 contain retained gas in the saltcake.
- The Solids Volume Update is the date of the most recent BBI estimate or for tanks undergoing retrieval it is the date of the most recent engineering volume estimate.

[a] AY-102 available space updated to reflect AY-102 status as an assumed leaker. The tank level is Not Applicable (N/A), although the Enraf is in service, the surface of the waste is not uniform and therefore the Enraf is not providing accurate measurements. The Total Waste for AY-102 in this table does not include the waste in the annulus.

Table 3-2. Double-Shell Tank Space Allocation, Inventory and Waste Receipts

Total DST Capacity (kgal)	Total DST Waste Inventory (kgal)		Allocation of Remaining DST Space (kgal)	
31,584	Inventory on 12/31/2018	25,182	Total DST capacity[a,b] =	31,584
	Inventory on 11/30/2018 =	25,218	Waste inventory[b] =	-25,182
	Change =	-36	Restricted usage space[c] =	-1,135
			Emergency space allocation[d] =	-1,265
			Available space =	4,002

[a] Assumes maximum authorized limits per OSD-T-151-00007, *Operating Specifications for the Double-Shell Storage Tanks*: AN, AW, SY Farm = 422 in., AP Farm = 458 in., except Tank AP-102 = 422 in.; AY and AZ Farms = 370 in, except AY-102 = 14 kgal. Volumes at maximum authorized limit from RPP-CALC-33163, *Tank Waste Volume and Level Calculations in Dome Space for 241-AP Tank Farm Up to 460 Inches*, and RPP-13019, *Determination of Hanford Waste Tank Volumes*.

[b] Total DST capacity was changed to reflect Tank AY-102 as an assumed leaker.

[c] Restricted space associated with flammable gas Waste Group A (RPP-10006, *Methodology and Calculations for the Assignment of Waste Groups for the Large Underground Waste Storage Tanks at the Hanford Site*) and tanks controlled for waste feed delivery per feed control list (HNF-SD-WM-OCD-015, *Tank Farms Waste Transfer Compatibility Program*). These tanks are Tanks AN-102, AN-103, AN-104, AN-105, AN-107, AP-105, AP-107, AW-101, AY-102, and SY-103.

[d] Includes 1,265 kgal emergency space allocation per HNF-3484, *Double-Shell Tank Emergency Pumping Guide*, and emergency WTP returns.

Facility Generations (kgal)		Gains Associated With (kgal)		Reductions Associated With (kgal)	
Tank farms	0	AZ-301 condensate	0	242-A Evaporator WVR	0
242-A Evaporator[i]	0	Instrumentation[e]	0	Instrumentation[e]	3
Inhibited Caustic	0	Miscellaneous[f]	0	Miscellaneous[f]	0
		Thermal expansion[h]	0	Waste evaporation	33
Total =	0	Total =	0	Total =	36

DST Net Waste Inventory Change					
Date	Facility Generation (kgal)	Gains (kgal)	Reductions (kgal)	Net waste Volume Change (kgal)	Total DST Waste Inventory (kgal)
12/2018	0	0	36	-36	25,182

[e] Adjustments due to instrumentation recalibrations and/or instrument flushing.

[f] Adjustments for gas retention and release from Waste Group A tanks.

[g] A negative value for a retrieval number indicates the net total of retrieval and pumping of supernatant liquid back into the SST for soak of hard-heel solids.

[h] Adjustments for thermal expansion of liquids inside tanks.

[i] Evaporator gains include additions of pump seal water, slurry, and condensate.

DST = double-shell tank.
SST = single-shell tank.
WTP = Waste Treatment and Immobilization Plant.
WVR = waste volume reduction.

This page intentionally left blank.

4.0 SINGLE-SHELL TANKS MONTHLY SUMMARY TABLES

The SST waste inventory and tank status are summarized in Table 4-1.

Table 4-1. Inventory and Status by Tanks – Single-Shell Tanks (6 pages)

All volume data obtained from Tank Waste Information Network System (TWINS)

Tank (241-)	Tank Integrity	Table 1-1 Tank Status	Total Waste (kgal)[a]	DrainableInterstitial Liquid (kgal)[b]	Waste Volumes[26]			Solids Volume Update[89]
					Supernatant Liquid (kgal)	Sludge (kgal)	Saltcake (kgal)	
A Farm Status								
A-101[27]	Sound		332	37	0	3	329	7/1/2018
A-102	Sound	WI	40	9	2	0	38	1/7/2015
A-103[28]	Sound		388	86	10	2	376	6/1/2017
A-104	Assumed leaker		25	0	0	25	0	7/1/2018
A-105	Assumed leaker		20	0	0	20	0	9/1/2018
A-106	Sound		79	9	0	50	29	4/1/2016
6 tanks – Total			**884**		**12**	**100**	**772**	
AX Farm Status								
AX-101	Sound		320	44	0	2	318	1/1/2018
AX-102	Sound		31	0	1	6	24	4/1/2018
AX-103	Sound		105	22	1	8	96	1/1/2017
AX-104	Sound		5	0	0	5	0	4/1/2018
4 tanks – Total			**461**		**2**	**21**	**438**	
B Farm Status								
B-101	Assumed leaker		104	20	0	28	76	1/1/2016
B-102	Sound		31	7	4	0	27	1/1/2016
B-103	Assumed leaker	WI	52	10	0	1	51	1/1/2016
B-104	Sound		369	45	0	309	60	1/1/2016
B-105	Assumed leaker		289	20	0	28	261	1/1/2016
B-106	Sound		117	8	1	116	0	4/1/2017
B-107	Assumed leaker		156	23	0	84	72	5/1/2017
B-108	Sound		85	19	0	27	58	7/1/2018
B-109	Sound		123	23	2	50	71	10/1/2016
B-110	Assumed leaker		244	27	0	244	0	1/1/2016
B-111	Assumed leaker		220	23	5	215	0	1/1/2017
B-112	Assumed leaker		33	2	2	14	17	1/1/2016
B-201	Assumed leaker	WI	29.3	5	0.3	29	0	7/1/2016
B-202	Sound	WI	29	4	2	27	0	8/1/2016
B-203	Assumed leaker		50	5	1	49	0	8/1/2016
B-204	Assumed leaker		50	5	2	48	0	8/1/2016
16 tanks – Total			**1,981**		**19**	**1,269**	**693**	

Table 4-1. Inventory and Status by Tanks – Single-Shell Tanks (6 pages)

All volume data obtained from Tank Waste Information Network System (TWINS)

Tank (241-)	Tank Integrity	Table 1-1 Tank Status	Total Waste (kgal)[a]	DrainableInterstitial Liquid (kgal)[b]	Waste Volumes[26]			Solids Volume Update[89]
					Supernatant Liquid (kgal)	Sludge (kgal)	Saltcake (kgal)	
BX Farm Status								
BX-101	Assumed leaker	WI	52	4	9	43	0	9/1/2016
BX-102	Assumed leaker		89	0	0	89	0	5/1/2018
BX-103	Sound	WI	73	4	11	62	0	10/1/2016
BX-104	Sound	WI	97	4	4	93	0	1/1/2017
BX-105	Sound		70	4	0	42	28	1/1/2017
BX-106	Sound		38	4	0	10	28	5/1/2017
BX-107	Sound	WI	344	37	0	344	0	11/1/2017
BX-108	Assumed leaker		30	4	0	30	0	1/1/2017
BX-109	Sound		189	25	0	189	0	7/1/2017
BX-110	Assumed leaker	WI	212	35	6	65	141	10/1/2016
BX-111	Assumed leaker		124	6	0	30	94	1/1/2016
BX-112	Sound		158	9	0	158	0	1/1/2017
12 tanks – Total			**1,476**		**30**	**1,155**	**291**	
BY Farm Status								
BY-101	Sound		366	24	0	37	329	7/1/2018
BY-102	Sound	WI	316	40	0	0	316	1/1/2016
BY-103	Assumed leaker	WI	412	55	0	9	403	1/1/2016
BY-104	Sound		401	44	0	43	358	7/1/2017
BY-105	Assumed leaker		477	47	0	48	429	1/1/2017
BY-106	Assumed leaker		429	37	0	30	399	8/1/2016
BY-107	Assumed leaker		274	42	0	16	258	9/1/2016
BY-108	Assumed leaker		216	33	0	44	172	7/1/2018
BY-109	Sound	WI	296	37	0	23	273	11/1/2017
BY-110	Sound		348	20	0	44	304	1/1/2017
BY-111	Sound		399	14	0	0	399	7/1/2017
BY-112	Sound		286	24	0	2	284	7/1/2018
12 Tanks – Total			**4,220**		**0**	**296**	**3,924**	

Table 4-1. Inventory and Status by Tanks – Single-Shell Tanks (6 pages)

All volume data obtained from Tank Waste Information Network System (TWINS)

Tank (241-)	Tank Integrity	Table 1-1 Tank Status	Total Waste (kgal)[a]	DrainableInterstitial Liquid (kgal)[b]	Waste Volumes[26]			Solids Volume Update[89]
					Supernatant Liquid (kgal)	Sludge (kgal)	Saltcake (kgal)	
C Farm Status								
C-101	Assumed leaker	RC	5.5	Retrieved to limit of first and second retrieval technologies 9/25/2013[9]				4/23/2015
C-102	Sound	RC	15.5	Retrieval completed 11/30/2015[10]				3/16/2016
C-103	Sound	RC	2.5	Retrieval completed 8/23/2006[11]				3/1/2017
C-104	Sound	RC	1.9	Retrieval completed 8/17/2012[12]				4/1/2018
C-105[29]	Assumed leaker	RC	1.5	Retrieval Completed 6/28/2018[13]				11/1/2018
C-106	Sound	RCR	2.8	Retrieval completed 12/31/2003[14]				5/1/2017
C-107	Sound	RC	10.0	Retrieved to limit of third retrieval technology 9/30/14[15]				5/1/2017
C-108	Sound	RC	3.4	Retrieved to limit of modified sluicing technology 3/22/2012[16]				4/1/2018
C-109	Sound	RC	2.0	Retrieved to limit of modified sluicing technology 9/12/2012[17]				4/1/2018
C-110[30]	Sound	RC	2.1	Retrieval completed 10/30/13[18]				5/1/2018
C-111[31]	Sound	RC	4.9	Retrieval completed 8/29/2016[19]				4/4/2017
C-112	Sound	RC	10.0	Retrieval completed 5/29/2014[20]				3/3/2015
C-201	Assumed leaker	RC	0.14	Retrieval completed 3/23/2006[21]				10/1/2016
C-202	Assumed leaker	RC	0.15	Retrieval completed 8/11/2005[22]				1/1/2017
C-203	Assumed leaker	RC	0.14	Retrieval completed 3/24/2005[23]				1/1/2017
C-204	Assumed leaker	RC	0.14	Retrieval completed 12/11/2006[24]				1/1/2017
16 tanks – Total			**62.67**		**0.3**	**62.37**	**0**	
S Farm Status								
S-101	Sound		350	45	0	235	115	8/1/2017
S-102 (27)(32)	Sound		93	5	2	22	69	7/1/2017
S-103[33]	Sound		230	45	1	9	220	8/1/2017
S-104	Sound		281	49	0	132	149	10/1/2018
S-105[33]	Sound		508	42	0	2	506	4/1/2017
S-106[33]	Sound	WI	451	26	0	0	451	8/1/2017
S-107	Sound		358	42	0	328	30	10/1/2017
S-108	Sound		541	4	0	5	536	5/1/2016
S-109	Sound		533	16	0	13	520	7/1/2017
S-110	Sound		387	30	0	91	296	11/1/2017
S-111[27]	Sound		401	42	0	72	329	4/1/2016
S-112	Sound	RC	2.7	Retrieval completed 3/2/2007[25]				9/1/2017
12 tanks – Total			**4,135.7**		**3.1**	**911.5**	**3221**	

Table 4-1. Inventory and Status by Tanks – Single-Shell Tanks (6 pages)

All volume data obtained from Tank Waste Information Network System (TWINS)

Tank (241-)	Tank Integrity	Table 1-1 Tank Status	Total Waste (kgal)[a]	DrainableInterstitial Liquid (kgal)[b]	Waste Volumes[26]			Solids Volume Update[89]
					Supernatant Liquid (kgal)	Sludge (kgal)	Saltcake (kgal)	
SX Farm Status								
SX-101	Sound	WI	416	44	0	141	275	6/1/2018
SX-102	Sound	WI	342	37	0	55	287	4/1/2015
SX-103	Sound		599	40	0	80	519	11/1/2017
SX-104[34]	Sound	FLA	433	48	0	70	363	8/1/2017
SX-105	Sound		376	39	0	63	313	11/1/2017
SX-106	Sound	WI	399	37	0	0	399	4/1/2016
SX-107	Assumed leaker		96	7	0	96	0	7/1/2015
SX-108	Assumed leaker		79	0	0	79	0	10/1/2017
SX-109	Assumed leaker		241	0	0	66	175	7/1/2015
SX-110[35]	Sound		58	0	0	49	9	7/1/2015
SX-111	Assumed leaker		117	11	0	97	20	10/1/2015
SX-112	Assumed leaker		77	6	0	77	0	10/1/2015
SX-113	Assumed leaker		19	0	0	19	0	10/1/2018
SX-114	Assumed leaker		158	30	0	127	31	7/1/2015
SX-115	Assumed leaker		4	0	0	4	0	7/1/2015
15 tanks – Total			**3414**		**0**	**1,023**	**2,391**	
T Farm Status								
T-101	Assumed leaker	FLA/WI	94	16	2	37	55	6/1/2016
T-102	Sound		30	3	11	19	0	7/1/2016
T-103	Assumed leaker		26	4	3	23	0	1/1/2016
T-104	Sound		310	31	0	310	0	7/1/2016
T-105	Sound		92	5	0	92	0	7/1/2016
T-106	Assumed leaker		21	0	0	21	0	5/1/2016
T-107	Assumed leaker	WI	166	34	5	161	0	4/1/2016
T-108	Assumed leaker		15	4	0	7	8	7/1/2016
T-109	Assumed leaker		98	11	0	0	98	4/1/2018
T-110	Sound		370	48	1	369	0	7/1/2016
T-111[87]	Assumed leaker	AL/WI	424	38	0	424	0	7/1/2017
T-112	Sound		62	4	7	55	0	8/8/2017
T-201	Sound	WI	31	4	2	29	0	5/1/2016
T-202	Sound		19	3	0	19	0	6/1/2016
T-203	Sound		36	5	0	36	0	5/1/2016
T-204	Sound		36	5	0	36	0	5/1/2016
16 tanks – Total			**1,830**		**31**	**1,638**	**161**	

Table 4-1. Inventory and Status by Tanks – Single-Shell Tanks (6 pages)

All volume data obtained from Tank Waste Information Network System (TWINS)

Tank (241-)	Tank Integrity	Table 1-1 Tank Status	Total Waste (kgal)[a]	DrainableInterstitial Liquid (kgal)[b]	Waste Volumes[26]			Solids Volume Update[89]
					Supernatant Liquid (kgal)	Sludge (kgal)	Saltcake (kgal)	
TX Farm Status								
TX-101	Sound		87	7	0	73	14	11/1/2017
TX-102	Sound		213	27	0	2	211	7/1/2015
TX-103	Sound		144	18	0	0	144	10/1/2015
TX-104	Sound		67	9	1	33	33	2/1/2017
TX-105	Assumed leaker		600	25	0	11	589	2/1/2018
TX-106	Sound		391	37	0	5	386	5/1/2018
TX-107	Assumed leaker		27	7	0	0	27	7/1/2015
TX-108	Sound		118	8	0	6	112	10/1/2015
TX-109	Sound		359	6	0	359	0	12/1/2017
TX-110	Assumed leaker		462	14	0	37	425	10/1/2015
TX-111	Sound		359	10	0	43	316	10/1/2015
TX-112	Sound		627	26	0	0	627	8/8/2017
TX-113	Assumed leaker		634	18	0	88	546	4/1/2017
TX-114	Assumed leaker		522	17	0	4	518	10/1/2015
TX-115	Assumed leaker		544	25	0	8	536	10/1/2015
TX-116	Assumed leaker		565	21	0	66	499	4/1/2017
TX-117	Assumed leaker		626	10	0	29	597	1/1/2018
TX-118	Sound		248	31	0	0	248	1/1/2018
18 tanks – Total			**6,593**		**1**	**764**	**5,828**	
TY Farm Status								
TY-101	Assumed leaker		106	2	0	59	47	10/1/2018
TY-102	Sound	WI	70	13	9	0	61	10/1/2016
TY-103	Assumed leaker		152	23	0	101	51	7/1/2016
TY-104	Assumed leaker		42	4	1	41	0	7/1/2016
TY-105	Assumed leaker		187	12	0	187	0	11/1/2018
TY-106	Assumed leaker		13	1	0	13	0	1/1/2017
6 tanks – Totals			**570**		**10**	**401**	**159**	

Table 4-1. Inventory and Status by Tanks – Single-Shell Tanks (6 pages)

All volume data obtained from Tank Waste Information Network System (TWINS)

Tank (241-)	Tank Integrity	Table 1-1 Tank Status	Total Waste (kgal)[a]	DrainableInterstitial Liquid (kgal)[b]	Waste Volumes[26]			Solids Volume Update[89]
					Supernatant Liquid (kgal)	Sludge (kgal)	Saltcake (kgal)	
241-U Tank Farm Status								
U-101	Assumed leaker		23	4	0	23	0	7/1/2016
U-102	Sound	WI	344	37	2	43	299	10/1/2018
U-103[27]	Sound		418	33	1	12	405	2/1/2017
U-104	Assumed leaker		84	0	0	45	39	4/1/2017
U-105	Sound	WI	350	44	0	32	318	3/1/2017
U-106	Sound		165	36	2	0	163	10/1/2017
U-107	Sound		277	32	0	16	261	12/1/2017
U-108	Sound		428	46	0	29	399	1/1/2018
U-109[27]	Sound		401	47	0	32	369	2/1/2017
U-110	Assumed leaker		183	16	0	183	0	11/1/2017
U-111	Sound	WI	219	31	0	26	193	4/1/2016
U-112	Assumed leaker		43	4	0	43	0	1/1/2018
U-201	Sound		5	1	1	4	0	7/1/2016
U-202	Sound		5	0	1	4	0	7/1/2016
U-203	Sound		3	0	1	2	0	7/1/2016
U-204	Sound		3	0	1	2	0	7/1/2016
16 tanks – Totals			**2,951**		**9**	**496**	**2,446**	

[a] 1 kgal differences are the result of computer rounding (e.g., volumes reported as 0 may represent as much as 499 gal of waste).
[b] Values may not represent current tank conditions.

AL	=	active leak	R	=	retrieval (tank in retrieval)
FLA	=	formal leak assessment	RC	=	retrieval complete
DE	=	level decrease evaluation.	RCR	=	retrieval complete – in review
IE	=	level increase evaluation.	WI	=	water intrusion

4.1 LEAK VOLUME ESTIMATES

RPP-32681, *Process to Assess Tank Farm Leaks in Support of Retrieval and Closure Planning*, established the process to develop estimates for tank leak inventories. The process is used to assess the source of tank farms leaks when necessary to support tank waste retrieval technology selections, and to reassess and update volume estimates and inventories for previously identified tank leaks. If the results suggest a change to the tank's integrity classification, TFC-ENG-CHEM-D-42, "Tank Leak Assessment Process," would be invoked.

Table 4-2 uses HNF-EP-0182, Rev. 209 estimates of leak volumes for SSTs that have known or suspected leaks, unless otherwise noted. Tanks previously assumed to have leaked but re-evaluated as sound using the process discussed above are listed at the end of the table solely for historical purposes. Endnotes to the table are provided in Section 6.1 and full reference citations are included in Section 6.2. Table 4-3 provides the DST primary tank leak volume estimate.

Table 4-2. SST Leak Volume Estimates (3 pages)

Tank (241-)	Assumed Leaker[45]	Estimated Leak Volume (gal)[44]	Interim Stabilized[51]	Leak Estimate Updated	Notes (see Section 6.1)
A-104	1975	500 to 2,500	9/1978	1983	(56)(85)
A-105	1963	10,000 to 270,000	7/1979	1991	(43)(56)
B-101	1974	--	3/1981	1989	(48)(85)
B-103	1978	--	2/1985	1989	(48)(85)
B-105	1978	--	12/1984	1989	(48)(85)
B-107	1980	8,000	3/1985	1986	(49)(85)
B-110	1981	10,000	3/1985	1986	(49)(85)
B-111	1978	--	6/1985	1989	(48)(85)
B-112	1978	2,000	5/1985	1989	(48)(85)
B-201	1980	1,200	8/1981	1984	(49)(85)
B-203	1983	300	6/1984	1986	(49)(85)
B-204	1984	400	6/1984	1989	(49)(85)
BX-101	1972	--	9/1978	1989	(48)(85)
BX-102	1971	70,000	11/1978	1986	(85)
BX-108	1974	2,500	7/1979	1986	(85)
BX-110	1976	--	8/1985	1989	(48)(85)
BX-111	1984	--	3/1995	1993	(48)(53)(85)
BY-103	1973	<5,000	11/1997	1983	(85)
BY-105	1984	--	3/2003	1989	(48)(85)
BY-106	1984	--	N/A	1989	(48)(85)
BY-107	1984	15,100	7/1979	1989	(49)(85)
BY-108	1972	<5,000	2/1985	1983	(85)

Table 4-2. SST Leak Volume Estimates (3 pages)

Tank (241-)	Assumed Leaker[45]	Estimated Leak Volume (gal)[44]	Interim Stabilized[51]	Leak Estimate Updated	Notes (see Section 6.1)
C-101	1980	20,000	11/1983	1986	(49)(50)(55)(85)
C-105	2010	<2,000	10/1995	2010	(29) (60)(85)
C-201	1988	550	3/1982	1987	(46)(85)
C-202	1988	450	8/1981	1987	(46)(85)
C-203	1984	400	3/1982	1986	(49)(85)
C-204	1988	350	9/1982	1987	(46)(85)
SX-107	1964	<5,000	10/1979	1983	(57)(85)
SX-108	1962	2,400 to 35,000	8/1979	1991	(47)(54)(57)(85)
SX-109	1965	<10,000	5/1981	1992	(47)(54)(57)(85)
SX-111	1974	500 to 2,000	7/1979	1986	(54)(57)(85)
SX-112	1969	30,000	7/1979	1986	(54)(57)(85)
SX-113	1962	15,000	11/1978	1986	(57)(85)
SX-114	1972	--	7/1979	1989	(48)(57)(85)
SX-115	1965	50,000	9/1978	1992	(57)
T-101	1992	7,500	4/1993	1992	(49)(85)
T-103	1974	<1,000	11/1983	1989	(49)(85)
T-106	1973	115,000	8/1981	1986	(49)(85)
T-107	1984	--	5/1996	1989	(48)(85)
T-108	1974	<1,000	11/1978	1980	(49)
T-109	1974	<1,000	12/1984	1989	(49)(85)
T-111	1979, 1994	<3,500	2/1995	2013	(49)(52)(85)
TX-105	1977	--	4/1983	1989	(48)(85)
TX-107	1984	2,500	10/1979	1986	(47)(85)
TX-110	1977	--	04/1983	1989	(48)(85)
TX-113	1974	--	4/1983	1989	(48)(85)
TX-114	1974	--	4/1983	1989	(48)(85)
TX-115	1977	--	9/1983	1989	(48)(85)
TX-116	1977	--	4/1983	1989	(48)(85)
TX-117	1977	--	3/1983	1989	(48)(85)
TY-101	1973	<1,000	4/1983	1980	(49)(58)
TY-103	1973	3,000	2/1983	1986	(58)(85)
TY-104	1981	1,400	11/1983	1986	(49)(58)(85)
TY-105	1960	35,000	2/1983	1986	(58)(85)

Table 4-2. SST Leak Volume Estimates (3 pages)

Tank (241-)	Assumed Leaker[45]	Estimated Leak Volume (gal)[44]	Interim Stabilized[51]	Leak Estimate Updated	Notes (see Section 6.1)
TY-106	1959	20,000	11/1978	1986	(58)(85)
U-101	1959	30,000	9/1979	1986	(85)
U-104	1961	55,000	10/1978	1986	(85)
U-110	1975	5,000 to 8,100	12/1984	1986	(49)(85)
U-112	1980	8,500	9/1979	1986	(49)(85)
60 tanks					
Assumed Leakers Assessed per TFC-ENG-CHEM-D-42 and Evaluated as Sound					
A-103	1987	5,500	6/1988	1987	(28)
AX-102	1988	3,000	9/1988	1989	(79)
AX-104	1977	--	8/1981	1989	(81)
C-110	1984	2,000	5/1995	1989	(30)
C-111	1968	5,500	3/1984	1989	(31)
S-104	1968	24,000	12/1984	1989	(85)(98)
SX-104	1988	6,000	4/2000	1988	(34)
SX-110	1976	5,500	8/1979	1989	(35)
8 tanks					

Table 4-3. DST Leak Volume Estimates

Tank (241-)	Assumed Leaker	Current Annulus Waste Volume (gal)	Interim Stabilized	Leak Estimate Updated	Notes (see Section 6.1)
AY-102	2012	4,457	N/A	2018	(1)(59)(85)
1 tank					

4.2 WATER INTRUSION IN SINGLE-SHELL TANKS

Since November 2012, all SST videos (excluding those for retrieval activities) have included evaluation of the tank for water intrusion. Table 4-4 lists those tanks currently identified as having an intrusion. To be included on this list, an SST must meet one of two criteria:

1. An intrusion is observed entering the tank during inspection or subsequent video reviews.
2. An intrusion is not observed during inspection. Liquid is covering at least part of the waste surface, comparison to past in-tank images shows an increase in visible liquid, and the surface or interstitial liquid level indicate an intrusion is occurring.

Table 4-4. Single-Shell Tanks with Confirmed Water Intrusion

Tank (241-)	Date of Video Inspection[a]	Notes (see Section 6.1)
A-102	1/21/2014	(86)
B-103	11/28/2018	--
B-201	2/1/2016	(94)
B-202	1/28/2014	(86)
BX-101	3/11/2013	(86)
BX-103	3/25/2013	(86)
BX-104	11/1/2018	--
BX-107	5/22/2017	(95)
BX-110	2/27/2013	(86)
BY-102	12/28/2012	(86)
BY-103	2/25/2014	(86)
BY-109	5/4/2017	(95)
S-106	3/4/2014	(86)
SX-101	12/14/2017	(97)
SX-102	11/21/2013	(86)
SX-106	04/15/2013	(86)
T-101	3/10/2014	(86)
T-107	1/4/2016	(94)
T-111	12/30/2013	(86)
T-201	3/26/2014	(86)
TY-102	3/7/2014	(86)
U-102	11/1/2016	(94)
U-105	11/3/2016	(94)
U-111	2/19/2014	(86)

[a] November 2012 and later inspections only, retrieval-related inspections not included. Number of SSTs inspected since November 2012 = 82.

SST = single-shell tank

Table 4-5 lists SSTs identified as having an intrusion in recent years, but the intrusion is not confirmed as currently continuing. To be included in Table 4-5 an SST must meet the following criterion:

1. An intrusion is not observed during inspection. Liquid is covering at least part of the waste surface, comparison to past in-tank images shows an increase in visible liquid, but the surface level or interstitial liquid level are either unavailable or inconclusive as to whether an intrusion is occurring.

Table 4-5. Single-Shell Tanks with Evidence of Recent Water Intrusion

Tank (241-)	Date of Video Inspection[a]	Notes (see Section 6.1)
A-103	1/21/2014	(86)
B-109	1/28/2014	(86)
BY-101	3/11/2013	(86)
BY-105	11/10/2016	(94)
S-111	3/25/2013	(86)
TX-108	3/18/2015	(88)
S-105	10/24/2016	(94)

[a] November 2012 and later inspections only, retrieval-related inspections not included. Number of SSTs inspected since November 2012 = 82.

SST = single-shell tank

This page intentionally left blank.

5.0 MISCELLANEOUS UNDERGROUND STORAGE TANKS AND SPECIAL SURVEILLANCE FACILITIES

Table 5-1 and Table 5-2 reflect miscellaneous underground storage tanks and special surveillance facilities in the 200 East and 200 West Areas, respectively, which have traditionally been managed by the tank farms operating contractor, based on WHC-SD-WM-TI-356, *Waste Storage and Leak Detection Criteria*. Assignment of long-term stewardship responsibility has not been determined in some cases. In HNF-EP-0182, *Waste Tank Summary Report for Month Ending August 31, 2014* (Rev. 320), the volume estimates and other information in Tables 5-1 and 5-2 were revised per RPP-RPT-58156, *Basis for Miscellaneous Underground Storage Tanks and Special Surveillance Facilities Waste Volumes Published in HNF-EP-0182 Revision 320 "Waste Tank Summary Report for Month Ending August 31, 2014*". Starting with revision 346, the volumes for 31 of the tanks/facilities in Tables 5-1 and 5-2 are updated quarterly with current volume and date information.

Table 5-1. 200 East Area Miscellaneous Underground Storage Tanks and Special Surveillance Facilities (3 pages)

Facility	Location	Received Waste From	Nominal Volume of Remaining Waste (kgal[a])	Volume Date	Notes (see Section 6.1)
204-AR/ 204-AR-TK-1	West of A Farm complex	Liquid waste from 100 Area, 300 Area rail and highway tankers	0.71	3/22/2009	(69)
204-AR/ 204-AR-Sump	West of A Farm complex	Liquid waste from 100 Area, 300 Area rail and highway tankers	No data	--	(69)
209-E-TK-111	209-E Building	Decon catch tank	No data	--	--
241-A-302-A[b]	South of PUREX bldg. 202A	A-151 diversion box	0.66	9/30/2018	(91)
241-A-302-B[b]	A Farm	A-152 diversion box	4.6	9/18/2018	(91)
241-A-350[b]	A Farm	Collects drainage	0.15	8/14/2018	(91)
241-A-417[b]	A Farm	Condensate/drainage from A and AX Farm Tanks and other related facilities	1.3	8/14/2018	(91)
241-AX-151 catch tank	North of PUREX	PUREX Plant	2.8	8/2/2006	(68)
241-AX-151 (4 diverter tanks)	North of PUREX	PUREX Plant	No data	--	(68)
241-AX-152 catch tank[b]	AX Farm	AX-152 diversion box, AX-151 diverter	<0.10	9/18/2018	(77), (91)
241-AX-152 (2 diverter tanks)	AX Farm	AX-152 diversion box	No data	--	(77)
241-AZ-151[b]	AZ Farm	AZ-702 condensate	3.6	9/30/2018	--

Table 5-1. 200 East Area Miscellaneous Underground Storage Tanks and Special Surveillance Facilities (3 pages)

Facility	Location	Received Waste From	Nominal Volume of Remaining Waste (kgal[a])	Volume Date	Notes (see Section 6.1)
241-AZ-154	AZ Farm	AZ-101 and AZ-102 steam condensate	<0.10	7/31/2008	--
241-AZ-301	AZ Farm	AZ-702 condensate	N/A	--	(71)
241-B-301-B	B Farm	B-151, B-152, B-153, B-252 diversion box	0.54	4/24/1985	--
241-B-302-B	B Farm	B-154 diversion box	5.0	5/10/1985	--
241-BX-302-A	BX Farm	BX-152, BX-153, BXR-152, BYR-152 diversion box	0.83	3/14/1984	--
241-BX-302-B	BX Farm	BX-154 diversion box	1.0	5/8/1985	--
241-BX-302-C	BX Farm	BX-155 diversion box	0.84	4/11/1985	--
241-BY-ITS2-TK 1	BY Farm	Vapor condenser	No data	--	--
241-BY-ITS2-TK 2	BY Farm	Heater flush tank	0.78	8/24/2006	--
241-C-301-C	C Farm	C-151, C-152, C-153, C-252 diversion box	13	5/11/2018	(96)
241-ER-311[b]	Southwest of B Plant	ER-151, ER-152 diversion box	<0.10	9/14/2018	(63), (91)
241-ER-311A	Southwest of B Plant	ER-151 diversion box	Empty	--	--
244-A-TK[b]	A Farm complex	DCRT (receives from several locations)	4.2	6/11/2018	(91)
244-A-Sump[b]	A Farm complex	DCRT (receives from several locations)	<0.10	6/11/2018	(91)
244-AR Vault/ TK-244-AR-001[b]	A Farm complex	A and AX Farms	<0.10	8/7/2018	(72), (91)
244-AR Vault/ Sump-AR-001[b]	A Farm complex	Process jumper connection leaks or cell decon washdowns	0.18	8/7/2018	(72), (91)
244-AR Vault/ TK-244-AR-002[b]	A Farm complex	A and AX Farms	<0.10	8/7/2018	(72), (91)
244-AR Vault/ Sump-AR-002	A Farm complex	Process jumper connection leaks or cell decon washdowns	<0.10	8/7/2018	(72), (91)
244-AR Vault/ TK-244-AR-003[b]	A Farm complex	A and AX Farms	0.13	8/7/2018	(72), (91)
244-AR Vault/ Sump-AR-003[b]	A Farm complex	Process jumper connection leaks or cell decon washdowns	<0.10	8/7/2018	(72), (91)
244-AR Vault/ TK-244-AR-004[b]	A Farm complex	A and AX Farms	<0.10	8/7/2018	(72), (91)
244-BX-TK[b]	BX Farm complex	B, BX, and BY Farm saltwells	10.9	6/5/2018	(91)

Table 5-1. 200 East Area Miscellaneous Underground Storage Tanks and Special Surveillance Facilities (3 pages)

Facility	Location	Received Waste From	Nominal Volume of Remaining Waste (kgal[a])	Volume Date	Notes (see Section 6.1)
244-BX-Sump[b]	BX Farm complex	B, BX, and BY Farm saltwells	<0.10	6/4/2018	(91)
244-BXR Vault/ TK-BXR-001	BX Farm	BX Farm and diversion boxes	4.1	11/1984	--
244-BXR Vault/ Sump-BXR-001	BX Farm	Process jumper connection leaks or cell decon washdowns	<0.10	4/1984	--
244-BXR Vault/ TK-BXR-002	BX Farm	BX Farm and diversion boxes	1.1	2/20/1985	--
244-BXR Vault/ Sump-BXR-002	BX Farm	Process jumper connection leaks or cell decon washdowns	<0.10	2/1985	--
244-BXR Vault/ TK-BXR-003	BX Farm	BX Farm and diversion boxes	0.79	2/18/1985	--
244-BXR Vault/ Sump-BXR-003	BX Farm	Process jumper connection leaks or cell decon washdowns	7.2	2/18/1985	--
244-BXR Vault/ TK-BXR-011	BX Farm	BX Farm and diversion boxes	4.0	4/1984	--
244-BXR Vault/ Sump-BXR-011	BX Farm	Process jumper connection leaks or cell decon washdowns	7.6	1/24/1985	--
244-CR Vault/ TK-CR-001[b]	C Farm	B, BX, BY, C Farm sludge slurry	5.2	9/4/2018	(70), (91), (93)
244-CR Vault/ Sump-CR-001	C Farm	Process jumper connection leaks or cell decon washdowns	<0.10	3/3/2010	(70)
244-CR Vault/ TK-CR-002	C Farm	244-CR Vault Tank CR-001	0.75	11/29/2004	(70)
244-CR Vault/ Sump-CR-002	C Farm	Process jumper connection leaks or cell decon washdowns	<0.10	3/09/2010	(70)
244-CR Vault/ TK-CR-003[b]	C Farm	Former C Farm saltwell receiver tank	2.4	9/4/2018	(70), (91)
244-CR Vault/ Sump-CR-003	C Farm	Process jumper connection leaks or cell decon washdowns	<0.10	3/10/2010	(70)
244-CR Vault/ TK-CR-011	C Farm	244-CR Vault Tanks CR-002 and CR-003	4.0	11/30/2004	(70)
244-CR Vault/ Sump-CR-011	C Farm	Process jumper connection leaks or cell decon washdowns	<0.10	2/25/2010	(70)

[a] Nominal volume of remaining waste is in kgal, unless noted otherwise.
[b] These MUSTs are monitored and updated on a quarterly basis.

DCRT = double-contained receiver tank.
HVAC = heating, ventilation, and air conditioning.
PUREX = plutonium/uranium extraction.

Volumes 0 < x < 100 gallons = < 0.10 kgal
Volumes 100 ≤ x < 1,000 gallons = Two decimal place kgal
Volumes x ≥ 1,000 gallons = One decimal place kgal"
"empty" = "No data"

Table 5-2. 200 West Area Miscellaneous Underground Storage Tanks and Special Surveillance Facilities (3 pages)

Facility	Location	Received Waste From	Nominal Volume of Remaining Waste (kgal[a])	Volume Date	Notes (see Section 6.1)
213W-TK-1	East of 213-W Compactor Facility	Water retention tank	1.6	3/19/1999	--
231-W-151-001	North of Z Plant	231-Z floor drains	1.4	8/15/1974	--
231-W-151-002	North of Z Plant	231-Z floor drains	0.96	8/15/1974	--
240-S-302 [b]	North of REDOX Plant	240-S-151 diversion box	1.7	10/3/2018	(64), (91)
241-E/W-151 Vent Station Catch Tank [b]	South of 609-A	Cross-site transfer lines/encasement	0.6	9/5/2018	(66), (91)
241-S-302A	S Farm	S-151 diversion box	0.30	3/19/2001	(82)
241-S-302B	SX Farm	S encasements	<0.10	4/1984	--
241-S-304 [b]	S Farm	S-151 diversion box	0.13	9/24/2018	(91)
241-SX-302	SX Farm	SX-151 diversion box, SX-152 transfer box	1.4	11/1984	--
241-T-301	T Farm	T-151, T-152, T-153, T-252 diversion box	22.0	7/3/1985	--
241-TX-302A	TX Farm	TX-153 diversion box	2.5	8/1984	--
241-TX-302B [b]	East of TX Farm	TX-155 diversion box	1.7	6/26/2018	(83), (91)
241-TX-302-B(R)	East of TX Farm	TX-155 diversion box	No data	--	(83)
241-TX-302C [b]	T Plant	TX-154 diversion box	2.0	9/26/2018	(91), (92)
241-TX-302-X-B	TX Farm	TX encasements	0.34	8/1984	--
241-TY-302A	TY Farm	TY-153 diversion box	0.46	6/25/1985	--
241-TY-302B	TY Farm	TY encasements	<0.10	8/1984	--
241-U-301B [b]	U Farm	U-151, U-152, U-153, U-252 diversion box	1.5	7/3/2018	(91)
241-UX-302A [b]	U Plant	UX-154 diversion box	0.6	9/26/2018	(65), (91)
241-Z-8 (216-Z-8)	East of Z Plant	RECUPLEX	0.50	10/19/1974	--
242-S TK C-100	242-S Evaporator	242-S Evaporator process condensate	8.0	--	--
242-T-135	T Evaporator	T Evaporator	No data	--	(76)
242-TA-R1	T Evaporator	Z Plant	No data	--	(75)

Table 5-2. 200 West Area Miscellaneous Underground Storage Tanks and Special Surveillance Facilities (3 pages)

Facility	Location	Received Waste From	Nominal Volume of Remaining Waste (kgal[a])	Volume Date	Notes (see Section 6.1)
242-TA-Sump	T Evaporator	Z Plant	<0.10	9/24/2010	(75)
243-S-TK-1	Northwest of S Farm	Personnel decontamination facility	No data	--	--
244-S-TK [b]	S Farm	From SSTs for transfer to Tank SY-102	3.6	6/26/2018	(91)
244-S-Sump [b]	S Farm	From SSTs for transfer to Tank SY-102	<0.10	3/20/2017	(91)
244-TX-TK [b]	TX Farm	Z Plant	7.5	9/11/2018	(91)
244-TX-Sump [b]	TX Farm	Z Plant	<0.10	6/22/2017	--
244-TXR Vault/ TK-TXR-001	TX Farm	Transfer lines, TXR-151 diversion box	0.47	10/1984	--
244-TXR Vault/ Sump-TXR-001	TX Farm	Process jumper connection leaks or cell decon washdowns	<0.10	10/1984	--
244-TXR Vault/ TK-TXR-002	TX Farm	Transfer lines	1.9	10/1984	--
244-TXR Vault/ Sump-TXR-002	TX Farm	Process jumper connection leaks or cell decon washdowns	0.10	10/1984	--
244-TXR Vault/ TK-TXR-003	TX Farm	Transfer lines	5.3	10/1984	--
244-TXR Vault/ Sump-TXR-003	TX Farm	Process jumper connection leaks or cell decon washdowns	<0.10	10/1984	--
244-U-TK	U Farm	U Farm saltwell liquids	1.9	11/3/2010	--
244-U-Sump	U Farm	Process jumper connection leaks or cell decon washdowns	No data	--	(84)
244-UR Vault/ TK-UR-001	U Farm	U Farm	0.42	7/1984	--
244-UR Vault/ Sump-UR-001	U Farm	Process jumper connection leaks or cell decontamination washdowns	1.2	6/26/1984	--
244-UR Vault/ TK-UR-002	U Farm	U Farm	1.5	7/11/1984	--
244-UR Vault/ Sump-UR-002	U Farm	Process jumper connection leaks or cell decontamination washdowns	<0.10	7/8/1984	--

Table 5-2. 200 West Area Miscellaneous Underground Storage Tanks and Special Surveillance Facilities (3 pages)

Facility	Location	Received Waste From	Nominal Volume of Remaining Waste (kgal[a])	Volume Date	Notes (see Section 6.1)
244-UR Vault/ TK-UR-003	U Farm	U Farm	0.60	7/1984	--
244-UR Vault/ Sump-UR-003	U Farm	Process jumper connection leaks or cell decontamination washdowns	3.4	6/21/1984	--
244-UR Vault/ 244-UR-004	U Farm	U Farm	No data	--	(74)

[a] Nominal volume of remaining waste is in kgal, unless noted otherwise.
[b] These MUSTs are monitored and updated on a quarterly basis.

RECUPLEX = recovery of uranium and plutonium by extraction.

REDOX = reduction-oxidation.
SST = single-shell tank.

Volumes 0 < x < 100 gallons = < 0.10 kgal
Volumes 100 ≤ x < 1,000 gallons = Two decimal place kgal

Volumes x ≥ 1,000 gallons = One decimal place kgal"
"empty" = "No data"

6.0 ENDNOTES AND REFERENCES

6.1 REPORT ENDNOTES

Table 6-1 includes all endnotes for the tables found in Sections 1.0 through 5.0 of this report. When an endnote is referenced multiple times, the location column shows each table referencing the endnote.

The following endnotes have been deleted from this report: 2, 3, 7, 36-42, 61-62, 67, 73, 78, and 80. The original endnote numbering has been retained; deleted endnote numbers have been retired to maintain consistency with the numbering of the remaining endnotes.

Table 6-1. Waste Tank Summary Report Endnotes (10 pages)

No.	Comment/Reference	Location
(1)	RPP-ASMT-53793, *Tank 241-AY-102 Leak Assessment Report*, states that Tank AY-102 was declared an "Assumed Leaker – Primary Tank" on October 19, 2012, due to the results of a leak assessment performed on discovery of waste material in the tank's annulus space. The ORP was notified of the intention to change the tank's leak integrity classification (Clark 2012).	Table 1-1, Table 4-2
(4)	SSTs in retrieval – Tanks with active bulk or heel retrieval operations in progress or awaiting heel retrieval (e.g., Tanks C-105).	Table 1-1

Table 6-1. Waste Tank Summary Report Endnotes (10 pages)

No.	Comment/Reference	Location
(5)	Retrieval operations complete – Tanks have active retrieval operations completed (e.g., Tanks C-101, C-102, C-103, C-104, C-105, C-107, C-108, C-109, C-110, C-111, C-112, C-201, C-202, C-203, C-204, and S-112); retrieval data report and/or retrieval completion certification have been provided to ORP for review and submittal to Ecology. Letter of Completion for Retrieval Data Report (from ORP to Ecology) for the following tanks: • Tank C-101 (letter 15-TF-0099, dated September 24, 2015 [Smith 2015b]) • Tank C-102 (letter 16-TF-0115, dated October 11, 2016 [Smith 2016b]) • Tank C-103 (letter 07-TPD-026, dated May 21, 2007 [Olinger 2007a]) • Tank C-104 (letter 14-TF-0013, dated February 18, 2014 [Smith 2014e]) • Tank C-107 (letter 15-TF-0086, dated September 14, 2015 [Smith 2015d]) • Tank C-108 (letter 13-TF-0120, dated November 27, 2013 [Smith 2013b]) • Tank C-109 (letter 14-TF-0020, dated March 13, 2014 [Smith 2014f]) • Tank C-110 (letter 14-TF-0086, dated August 6, 2014 [Smith 2014g]) • Tank C-111 (letter 17-TPD-0018, dated August 11, 2017 [Smith, 2017c]) • Tank C-112 (letter 15-TF-0098, dated September 30, 2015 [Smith 2015c]) • Tank C-201 (letter 06-TPD-071, dated November 2, 2006 [Schepens 2006b]) • Tank C-202 (letter 06-TPD-051, dated July 31, 2006 [Schepens 2006c]) • Tank C-203 (letter 06-TPD-005, dated January 18, 2006 [Schepens 2006d]) • Tank C-204 (letter 07-TPD-043, dated August 9, 2007 [Olinger 2007b]) • Tank S-112 (letter 07-TPD-066, dated December 21, 2007 [Olinger 2007c]). Retrieval completion certifications provided by ORP to Ecology for the following tanks: • Tank C-101 (letter 14-TF-0113, dated September 24, 2014 [Smith 2014b]) • Tank C-102 (letter 15-TF-0116, dated November 30, 2015 [Smith 2015a]) • Tank C-104 (letter 13-TF-0018, dated March 21, 2013 [Fletcher 2013a]) • Tank C-105 (letter 18-TF-0044, dated June 28, 2018 [Vance 2018]) • Tank C-107 (letter 14-TF-0114, dated September 30, 2014 [Smith 2014c]) • Tank C-108 (letter 13-TF-0025, dated May 1, 2013 [Fletcher 2013b]) • Tank C-109 (letter 13-TF-0037, dated June 4, 2013 [Smith 2013a]) • Tank C-110 (letter 14-TF-0007, dated January 29, 2014 [Smith 2014a]). • Tank C-112 (letter 14-TF-0115, dated September 30, 2014 [Smith 2014d]). • Tank C-111 (letter 16-TF-0090, dated August 29, 2016 [Smith 2016a]). Completion of retrieval activities per the 241-AY-102 Settlement Agreement provided by ORP and WRPS to Ecology: • Tank AY-102 (Letter 17-TF-0021, dated February 23, 2017) [Smith 2017a]. • Tank AY-102 (Letter 17-TF-0030, dated March 13, 2017) [Smith 2017b].	Table 1-1 Table 2-1
(6)	Retrieval operations complete and in review – Tank(s) have active retrieval operations completed (e.g., Tank C-106); report or practicability evaluation is pending approval; or evaluation has been accepted, but final completion letter or certification submittal is pending.	Table 1-1
(8)	Nominal volume of waste inventory is the best estimate of residual volume. Retrieval data reports also provide 95 percent upper confidence level volume as the bounding estimate of remaining waste.	Table 2-1
(9)	Tank C-101 nominal waste volume – Total waste 4,995 gal (RPP-CALC-56434, *Post-Retrieval Camera/CAD Modeling System Waste Volume Estimate for Tank 241-C-101*) revised to 5.5 kgal (RPP-RPT-54440, *Derivation of Best-Basis Inventory for Tank 241-C-101 as of April 23, 2015*)	Table 2-1, Table 4-1

Table 6-1. Waste Tank Summary Report Endnotes (10 pages)

No.	Comment/Reference	Location
(10)	Tank C-102 nominal waste volume estimate – Total waste 15.5 kgal (RPP-RPT-57458, *Derivation of Best-Basis Inventory for tank 241-C-102 as of March 16, 2016*)	Table 2-1, Table 4-1
(11)	Tank C-103 nominal waste volume – Total waste 2,529 gal, sludge 2,282 gal, supernatant 247 gal (RPP-RPT-33060, *Retrieval Data Report for Single-Shell Tank 241-C-103*).	Table 2-1, Table 4-1
(12)	Tank C-104 nominal waste volume – Total waste 1.9 kgal of sludge (RPP-RPT-46616, *Derivation of Best-Basis Inventory for Tank 241-C-104 as of April 1, 2018*).	Table 2-1, Table 4-1
(13)	Tank C-105 nominal waste volume estimate – Total Waste is 1.5 kgal of sludge (RPP-RPT-58071, *Derivation of Best-Basis Inventory for Tank 241-C-105 as of November 1, 2018* and RPP-RPT-60731, *Post-Retrieval Camera/CAD Modeling System Waste Volume Estimate for Tank 242-C-105).*	Table 2-1, Table 4-1
(14)	Tank C-106 nominal waste volume – Total waste 2,771 gal, sludge 2,686 gal, supernatant 85 gal (RPP-20577, *Stage II Retrieval Data Report for Single-Shell Tank 241-C-106*).	Table 2-1, Table 4-1
(15)	Tank C-107 waste volume estimate – Total waste 10 kgal of sludge (RPP-RPT-48745, Rev. 10, *Derivation of Best-Basis Inventory for Tank 241-C-107 as of May 1, 2017*).	Table 2-1, Table 4-1
(16)	Tank C-108 nominal waste volume – Total waste 3.4 kgal sludge (RPP-RPT-45147, *Derivation of Best-Basis Inventory for Tank 241-C-108 as of April 1, 2018*).	Table 2-1, Table 4-1
(17)	Tank C-109 nominal waste volume – Total waste 2.0 kgal (RPP-RPT-51343, *Derivation of Best-Basis Inventory for Tank 241-C-109 as of April 1, 2018*).	Table 2-1, Table 4-1
(18)	Tank C-110 nominal waste volume – Total waste 2.1 kgal (RPP-RPT-49876, *Derivation of Best-Basis Inventory for Tank 241-C-110 as of May 1, 2018*).	Table 2-1, Table 4-1
(19)	Tank C-111 volume estimate – Total waste 4.9 kgal (RPP-RPT-59377, *Post-Retrieval Camera/CAD Modeling System Waste Volume Estimate for Tank 241-C-111* and RPP-RPT-48459, *Derivation of Best-Basis Inventory for Tank 241-C-111 as of June 28, 2016).*	Table 2-1, Table 4-1
(20)	Tank C-112 waste volume estimate – Total waste 12,700 gal (RPP-CALC-56856, *Estimated Waste Volume Remaining in Single-Shell Tank 241-C-112 after Hard Heel Retrieval*); revised to 10,000 gal (RPP-RPT-52516, *Derivation of Best-Basis Inventory For Tank 241-C-112 as of March 3, 2015*).	Table 2-1, Table 4-1
(21)	Tank C-201 nominal waste volume – Total waste 144 gal, sludge 142 gal, supernatant 2 gal (RPP-29441, *Post-Retrieval Waste Volume Determination for Single-Shell Tank 241-C-201* and RPP-RPT-58929, *Derivation of Best-Basis Inventory for Tank 241-C-201 as of October 1, 2016.*).	Table 2-1, Table 4-1
(22)	Tank C-202 nominal waste volume – Total waste 147 gal, sludge 145 gal, supernatant 2 gal (RPP-RPT-29095, *Retrieval Data Report for Single-Shell Tank 241-C-202* and RPP-RPT-59855, *Derivation of Best-Basis Inventory For Tank 241-C-202 as of January 1, 2017*.	Table 2-1, Table 4-1
(23)	Tank C-203 nominal waste volume – Total waste 139 gal, sludge 126 gal, supernatant 13 gal (RPP-RPT-26475, *Retrieval Data Report for Single-Shell Tank 241-C-203*).	Table 2-1, Table 4-1
(24)	Tank C-204 nominal waste volume – Total waste 137 gal, sludge 134 gal, supernatant 3 gal (RPP-RPT-34062, *Retrieval Data Report for Single-Shell Tank 241-C-204*).	Table 2-1, Table 4-1
(25)	Tank S-112 nominal waste volume – Total waste 2,667 gal, sludge 2,543 gal, supernatant 124 gal (RRP-RPT-60377, *Derivation of Best-Basis Inventory for Tank 241-S-112 as of September 1, 2017*).	Table 2-1, Table 4-1
(26)	For some tanks, a volume difference exists between estimates published in HNF-SD-RE-TI-178, *Single-Shell Tank Interim Stabilization Record*, and later TWINS estimates. TWINS estimates are reported in Table 4-1.	Table 4-1
(27)	Tank A-101 contains retained gas in saltcake; Tanks S-102, S-111, U-103, and U-109 contain retained gas in saltcake and sludge.	Table 4-1

Table 6-1. Waste Tank Summary Report Endnotes (10 pages)

No.	Comment/Reference	Location
(28)	Status of Tank A-103 changed from "assumed leaker" to "sound" per RPP-ASMT-42278, *Tank 241-A-103 Leak Assessment Report*.	Table 4-1, Table 4-2
(29)	Status of Tank C-105 changed from "sound" to "assumed leaker" per RPP-ASMT-46452, *Tank 241-C-105 Leak Assessment Completion Report*. C-105 was not identified in Table 4-2 of Rev. 209.	Table 4-1, Table 4-2
(30)	Status of Tank C-110 changed from "assumed leaker" to "sound" per RPP-ASMT-38219, *Tank 241-C-110 Leak Assessment Report*.	Table 4-1, Table 4-2
(31)	Status of Tank C-111 changed from "assumed leaker" to "sound" per RPP-ASMT-39155, *Tank 241-C-111 Leak Assessment Report*.	Table 4-1, Table 4-2
(32)	Retrieval operations began in Tank S-102 on December 16, 2004, and were suspended in July 2007. Actions were subsequently taken to reduce the remaining liquid volume to below interim stabilization criteria. A letter was submitted to DOE on June 1, 2010, that stated Tank S-102 again met interim stabilization criteria (Sax 2010).	Table 4-1
(33)	The *Hanford Federal Facility Agreement and Consent Order* (signed August 2004) modified Milestone M-45-00C (Change Order M-45-04-01) changing the regulatory requirements for retrieval of waste in Tanks S-103, S-105, and S-106 (Ecology et al 1989). "Retrieval" status in these tanks is thereby rescinded.	Table 4-1
(34)	Status of Tank SX-104 changed from "assumed leaker" to "sound" per RPP-ASMT-48143, *Tank 241-SX-104 Leak Assessment Completion Report*.	Table 4-1, Table 4-2
(35)	Status of Tank SX-110 changed from "assumed leaker" to "sound" per RPP-ASMT-47140, *Tank 241-SX-110 Leak Assessment Report*.	Table 4-1, Table 4-2

Table 6-1. Waste Tank Summary Report Endnotes (10 pages)

No.	Comment/Reference	Location
(43)	WHC-MR-0264, *Tank 241-A-105 Leak Assessment*, estimated that 610 kgal of cooling water was added to Tank A-105 from November 1970 to December 1978 to aid in evaporative cooling. In accordance with *Washington Administrative Code* (WAC) 173-303-070 (2)(a)(ii), any of this added cooling water that has subsequently leaked from the tank must be classified as a waste and should be included in the total leak volume. In August 1991, the leak volume estimate for this tank was updated in accordance with the WAC regulations. Previous estimates excluded the cooling water leaks from the total leak volume estimates because the waste content (concentration) in the cooling water that leaked should be much less than the original liquid waste in the tank (the sludge is relatively insoluble). The total leak volume estimate in this report (10 to 277 kgal) is based on the following: • WHC-MR-0264 estimates 5 to 15 kgal for the initial leak prior to August 1968. WHC-MR-0264 also estimates 5 to 30 kgal for the leak while the tank was being sluiced from August 1968 to November 1970. WHC-MR-0264 estimates that 610 kgal of cooling water was added to the tank from November 1970 to December 1978, and leakage was estimated to be small during this period. This reference states "Sufficient heat was generated in the tank to evaporate most, and perhaps nearly all, of this water." This results in a low estimate of zero gallons leakage from November 1970 to December 1978. • WHC-EP-0410, *Tank 241-A-105 Evaporation Estimate 1970 Through 1978*, estimates that 378 to 410 kgal evaporated out of the tank from November 1970 to December 1978. Subtracting the minimum evaporation estimate from the cooling water added estimate provides a range from 0 to 232 kgal of cooling water leakage from November 1970 to December 1978.	Table 4-2

Time period	Low estimate	High estimate
Prior to August 1968	5,000	15,000
August 1968 to November 1970	5,000	30,000
November 1970 to December 1978	0	232,000
Totals	**10,000**	**277,000**

(44)	Tank leak volume estimates are being updated as a result of tank leak volume assessments and review of tanks for retrieval/closure consideration. The tank leak volume estimates do not include (with some exceptions): (a) cooling/raw water leaks, (b) intrusions (rain infiltration) and subsequent leaks, (c) leaks inside the tank farm but not through the tank liner (surface leaks, pipeline leaks, leaks at the joint for the overflow or fill lines, etc.), and (d) leaks from catch tanks, diversion boxes, encasements, etc.	Table 4-2
(45)	In many cases, a leak was suspected long before it was identified or confirmed. For example, SD-WM-SAR-006, *Single-Shell Tank Isolation Safety Analysis Report*, shows that Tank U-104 was suspected of leaking in 1956. The leak was confirmed in 1961. This report lists the "assumed leaker" date of 1961. Using present standards, Tank U-104 would have been declared an assumed leaker in 1956. In 1984, the criteria designations of "suspected leaker," "questionable integrity," "confirmed leaker," "declared leaker," and "borderline and dormant" were merged into one category now reported as "assumed leaker." Catlin (1980) describes when, how long, and how fast some of the tanks leaked.	Table 4-2
(46)	The leak volume estimate date for these tanks is before the declared leaker date because the tank was in a suspected leaker or questionable integrity status; however, a leak volume had been estimated prior to the tank being reclassified.	Table 4-2
(47)	The increasing radiation levels in drywells and laterals associated with these three tanks could be indicating a continuing leak or movement of existing radionuclides in the soil. There is no conclusive way to confirm these observations. (There are currently no functioning laterals and no plan to prepare them for use).	Table 4-2

Table 6-1. Waste Tank Summary Report Endnotes (10 pages)

No.	Comment/Reference	Location
(48)	Methods were used to estimate the leak volumes from these 19 tanks based on the assumption that their cumulative leakage is approximately the same as for 18 of the 24 tanks identified in Baumhardt (1989) and Jensen/Merril (1989). The total leak volume estimate for these tanks is 150 kgal (rounded to the nearest kgal), for an average of approximately 8 kgal for each of 19 tanks.	Table 4-2
(49)	Leak volume estimate is based solely on observed liquid level decreases in these tanks. This is considered to be the most accurate method for estimating leak volumes.	Table 4-2
(50)	Tank C-101 experienced a liquid level decrease in the late 1960s and was taken out of service and pumped to a minimum heel in December 1969. In 1970, the tank was classified as a "questionable integrity" tank. Liquid level data show decreases in level throughout the 1970s, and the tank was saltwell pumped during the 1970s, ending in April 1979. The tank was reclassified as a "confirmed leaker" in January 1980 (WHC-MR-0132, *A History of the 200 Area Tank Farms*, and WHC-SD-EN-TI-185, *Assessment of Unsaturated Zone Radionuclide Contamination Around Single Shell Tanks 241-C-105 and 241-C-106*). WHC-SD-EN-TI-185 provides information on the potential for leaks from other C Farm tanks (specifically Tanks C-102, C-103, and C-109).	Table 4-2
(51)	These dates indicate when the tanks were declared to be interim stabilized. In some cases, the official interim stabilization documents were issued at a later date. Also, in some cases, the field work associated with interim stabilization was completed at an earlier date.	Table 4-2
(52)	Tank T-111 was declared an "assumed re-leaker" on February 28, 1994, due to a decreasing trend in surface level measurement. This tank was pumped, and interim stabilization was completed on February 22, 1995. RPP-RPT-54964, *Evaluation of Tank 241-T-111 Level Data and In-Tank Video Inspection*, estimated that from 1995 to January 1, 2014, Tank T-111 leaked approximately 2,500 gal. The value reported in Table 4-2 sums the <1,000 gal reported in 1994, with the approximately 2,500 gal reported in 2013.	Table 4-2
(53)	Tank BX-111 was declared an "assumed re-leaker" in April 1993. Preparations for pumping were delayed following an administrative hold placed on all tank farm operations in August 1993. Pumping resumed and the tank was declared interim stabilized on March 15, 1995.	Table 4-2
(54)	The leak volume and curie release estimates on Tanks SX-108, SX-109, SX-111, and SX-112 have been reevaluated using a historical leak model (HNF-3233, *Re-Analysis of SX Farm Leak Histories with the Historical Leak Model Rev. 1 [HLMr]*). In general, the model estimates are much higher than the values listed in Table 4-2, both for volume and curies released. The values listed in the table do not reflect this revised estimate because, "In particular, it is worth emphasizing that this report was never meant to be a definitive update for the leak baseline at the Hanford Site. It was rather meant to be an attempt to view the issue of leak inventories with a new and different methodology" (HNF-3233).	Table 4-2
(55)	Leak from Tank C-101 was re-assessed in RPP-ENV-33418, *Hanford C-Farm Leak Assessments Report*. Revised leak volumes presented in the report have not yet been adopted in Table 4-2.	Table 4-2
(56)	Leaks from Tanks A-104 and A-105 were re-assessed in RPP-ENV-37956, *Hanford 241-A/AX Farm Leak Inventory Assessment Report*. Revised leak volumes presented in the report have not yet been adopted in Table 4-2.	Table 4-2
(57)	Leaks from Tanks SX-107, SX-108, SX-109, SX-111, SX-112, SX-113, SX-114, and SX-115 were re-assessed in RPP-ENV-39658, *Hanford SX-Farm Leak Assessments Report*. Revised leak volumes presented in the report have not yet been adopted in Table 4-2.	Table 4-2

Table 6-1. Waste Tank Summary Report Endnotes (10 pages)

No.	Comment/Reference	Location
(58)	Leaks from Tanks TY-101, TY-103, TY-104, TY-105, and TY-106 were re-assessed in RPP-RPT-42296, *Hanford TY-Farm Leak Assessments Report*. Revised leak volumes presented in the report have not been adopted pending completion of a formal leak assessment of Tank TY-101 using TFC-ENG-CHEM-D-42.	Table 4-2
(59)	As of 10/1/2018 the estimated annulus waste volume is 4,457 gals (RPP-RPT-44630, Derivation of Best-Basis Inventory for Tank 241-AY-102 as of October 1, 2018).	Table 4-2
(60)	A reevaluation of the Tank C-105 leak integrity using TFC-ENG-CHEM-D-42 was completed in May 2010, concluding that a leak from the tank could not be ruled out by the evidence from recently completed Direct Push C7469 and other available data, and recommending that the leak integrity status be revised to "assumed leaker." The estimated leak volume was <2,000 gal (RPP-ASMT-46452).	Table 4-2
(63)	A leak assessment was performed because of the 0.5-in. liquid level decrease between early October 2005 and January 31, 2006. The leak assessment, issued on March 17, 2006, concluded that a tank leak was the most likely explanation for the level trend (RPP-RPT-29163, *Tank 241-ER-311 Leak Assessment Report*). The solids volume in the tank is not known. Sample activities conducted during November 1999 concluded that there were approximately 7 to 9 in. of solids beneath the east riser and no solids beneath the west riser (HNF-5985, *ER-311 Flammable Gas Response and Findings*). The remaining liquid in the tank was evaporated to dryness between October 13, 2006 and February 15, 2007. A subsequent video inspection on March 17, 2007, indicated no remaining free liquid was present (Olinger 2007d). There are ground level 4 inch risers to the tank; one located at the west end (location of the Enraf) and one at the east end (Location of breather filter) (RPP-RPT-29163).	Table 5-1
(64)	A leak assessment was performed because of a steady, predictable liquid level decrease of approximately 0.33 in./year since the early 1980s. The tank was designated as an "assumed leaker" in 1985, but had no record of a formal leak assessment. The leak assessment report was issued on October 10, 2007 (RPP-ASMT-35057, *Tank 240-S-302 Leak Assessment Report*). A total of 6,265 gal of supernatant was pumped from the tank between September 21, 2008 and September 28, 2008. A solids level of 14.12 in. (1,361 gal) was measured with an ENRAF densitometer on September 9, 2008. A post-pumping visual inspection showed a small 1-ft wide by 10-ft long pool of liquid centered beneath the pump, corresponding to less than 6 gal of free liquid. The remaining volume is estimated to be 1,360 to 1,660 gal, based on ENRAF and densitometer readings in different risers, and assuming that the solids are level across the tank.	Table 5-2
(65)	A leak assessment was performed because of the 0.7-in. level decrease between January 2004 and February 2006. The leak assessment concluded that a tank leak was the most likely explanation for the level trend. The leak assessment report was issued on May 12, 2006 (RPP-RPT-29711, *Tank 241-UX-302A Leak Assessment Report*). Pumping of the remaining free liquid from the tank was completed October 25, 2006 (Schepens 2006e). An estimated 75 to 110 gal of sludge and 10 gal of free liquid remained in the tank (RPP-RPT-31779, *241-UX-302A Catch Tank Liquid Mitigation Completion Report*). Following additional liquid intrusion, the tank was pumped August 27, 2009 (RPP-RPT-42789, *Completion of Removal of Pumpable Liquid From 241-UX-302A*), June 21, 2012, to August 7, 2012 (Work Package TFC-WO-11-5930 WCN-2), May 3, 2015 (Work Order #WO-163708), and November 2, 2016 (Work Order# 218270). ENRAF liquid level readings estimate that approximately 90 gallons of sludge and liquid remain in the tank as 11/2/2016.	Table 5-2

Table 6-1. Waste Tank Summary Report Endnotes (10 pages)

No.	Comment/Reference	Location
(66)	A leak assessment was performed because of a 1.25-in. liquid level decrease between July 2006 and November 2006. The leak assessment concluded that the level decrease was the result of evaporation from an operating exhauster connected to catch tank 241-ER-311. This was confirmed when the exhauster was shut down and the liquid level stabilized. The tank remains classified as a "sound" tank. The leak assessment report was issued on June 25, 2007 (RPP-ASMT-33741, *Tank 241-EW-151 Leak Assessment Report*).	Table 5-2
(68)	241-AX-151 consists of four 50-gal diverter tanks (Tanks D – G) located in individual cells and the approximate 12,200-gal capacity 241-AX-151-CT catch tank (stainless steel lined concrete vault and sump) receiving drainage from the pump pit and the four cells.	Table 5-1
(69)	204-AR Customer Waste Unloading Facility includes a 1,500-gal catch tank enclosed in a stainless steel lined pit and pit sump; combined capacity of the catch tank and pit are 4,550 gal (WHC-SD-WM-SAR-040, *Safety Analysis Report for the 204-AR Waste Unloading Facility*).	Table 5-1
(70)	244-CR Vault contains two 40-kgal tanks, CR-011 and CR-001, and two 15-kgal tanks, CR-002 and CR-003, in individual cells. The contents of the 244-CR Vault cells were pumped to Tank C-104 during retrieval of Tank C-104. Pumping was completed on March 10, 2010 (RPP-RPT-45845, *Completion of Pumpable Liquids Removal from 244-CR Vault*). The completion letter was sent to ORP on April 28, 2010 (Dunning 2010). Tank volumes except tank CR-001 and CR-003 are from RPP-RPT-24257, *244-CR Vault Liquid Level Assessment and Video Inspection Completion Report*. Following WRPS-PER-2012-0724, quarterly monitoring of Tank CR-001 was implemented in April 2013 by installation of an ENRAF monitoring device; the volume is derived from RPP-CALC-24219, *244-CR Vault Tank and Cell Volume Calculations*.	Table 5-1
(71)	Tank AZ-301 is an active part of the DST system.	Table 5-1
(72)	244-AR vault was interim-stabilized in 2003 (RPP-12051, *244-AR Vault Interim Stabilization Completion Report*). The tanks and cell sumps in the 244-AR Vault are monitored quarterly for signs of intrusion.	Table 5-1
(74)	Records in the waste information data system indicate that Tank 244-UR-004 did not contain radioactive material. The tank was used to stage nitric acid to the other 244-UR vault tanks during the uranium recovery process in the 1950s.	Table 5-2
(75)	On August 1, 2002, a video surveillance at the 242-TA receiver vault revealed that catch tank TA-R1 was floating off its foundation due to liquid at a depth of approximately 10 ft in the vault. It was observed that associated piping was damaged. Approximately 7,000 gal of liquid had accumulated in the vault. Pumping the liquid from the vault and resealing the cover plate to prevent further intrusion were completed November 26, 2003. The remaining liquid volume in the vault was not reported (Occurrence Report RP-CHG-TANKFARM-2002-0083, "Video Surveillance Reveals Catch Tank TA-R1 Floating Off Of Its Foundation at 242-TA Vault").	Table 5-2
(76)	Video surveillance of 242-T-135 was prompted by the discovery of approximately 7,000 gal of water in the 242-TA receiver vault on August 1, 2002. There was no report of water present (Occurrence Report RP--CHG-TANKFARM-2002-0083).	Table 5-2
(77)	Removed from service on March 23, 2001 (Occurrence Report RP-CHG-TANKFARM-2001-0014, "Catch Tank 152-AX Was Identified as a Potential Leaking Tank").	Table 5-1
(79)	Tank AX-102 integrity status was changed from "assumed leaker" to "sound" per RPP-ASMT-42628, *Tank 241-AX-102 Integrity Assessment Report*.	Table 4-2
(81)	Tank AX-104 integrity status was changed from "assumed leaker" to "sound" per RPP-ASMT-57574, *Tank 241-AX-104 Integrity Assessment Report*.	Table 4-2
(82)	Partially filled with grout February 1991, determined to be an assumed leaker after leak tests. No surface level or intrusion readings obtainable. Tank S-304 replaced 241-S-302A.	Table 5-2

Table 6-1. Waste Tank Summary Report Endnotes (10 pages)

No.	Comment/Reference	Location
(83)	241-TX-302-B(R) replaced 241-TX-302B and a new 241-TX-302B later replaced 241-TX-302B(R).	Table 5-2
(84)	244-U-TK and 244-U-Sump were never placed in service. Per RPP-RPT-58156, "Tank 244-U was originally intended as the saltwell receiver for 241-U tank farm tanks. However the tank was bypassed and never received saltwell waste."	Table 5-2
(85)	The following references provide additional information for the listed tanks: • Baumhardt, 1989: Tank B-101, B-103, B-105, B-107, B-110, B-111, B-112, B-203, B-204, BX-101, BX-102, BX-108, BX-110, BX-111, BY-105, BY-106, BY-107, C-101, C-203, S-104, SX-111, SX-112, SX-113, SX-114, T-103, T-106, T-107, T-109, TX-105, TX-107, TX-110, TX-113, TX-114, TX-115, TX-116, TX-117, TY-103, TY-104, TY-105, TY-106, U-101, U-104, U-110, and U-112 • Clark, 2012, Tank AY-102 • Tank AY-102 Monthly Monitoring Reports:, RPP-RPT-59566, RPP-RPT-59601, RPP-RPT-59683, RPP-RPT-59728, RPP-RPT-59792, RPP-RPT-59885, RPP-RPT-59836, RPP-RPT-60196, RPP-RPT-60344, RPP-RPT-60241, RPP-RPT-60435, RPP-RPT-60584, RPP-RPT-60713 • Groth, 1987: Tanks C-201, C-202, and C-204 • PNL-4688, 1983: Tanks A-104, BY-103, BY-108, and SX-107 • RHO-RE-SR-14, 1984: Tank B-201 • RPP-ASMT-46452, 2010: Tank C-105 • RPP-RPT-54964, 2014: Tank T-111 • WHC-MR-0300, 1992: Tank SX-108 • WHC-MR-0301, 1992: Tank SX-109 • WHC-MR-0302, 1992: Tank SX-115 • WHC-TANKFARM-1992-0073, 1992: Tank T-101 • WHC-TANKFARM-1994-0009, 1994: Tank T-111	Table 4-2
(86)	See RPP-RPT-50799, 2015, *Suspect Water Intrusion in Single-Shell Tanks*, Revision 2, for basis for intrusion decision and intrusion rates. Tanks SX-102 and T-111 are only discussed in Appendix B of RPP-RPT-50799 since the videos in these two tanks were obtained for reasons other than intrusion investigation.	Table 4-4, Table 4-5
(87)	T-111 values do not include the volume reduction associated with the current exhauster operation on the tank. The tank T-111 volume will be updated following completion of exhauster operation.	Table 4-1
(88)	See RPP-RPT-58849, 2015, *Fiscal Year 2015 Visual Inspection Report for Single-Shell Tanks*, Revision 0, for basis for intrusion decision.	Table 4-5
(89)	The Solids Volume Update is the date of the most recent BBI estimate or for tanks undergoing retrieval it is the date of the most recent engineering volume estimate.	Table 4-1
(90)	Tank AY-102 nominal waste volume estimate – Total waste in primary tank is approximately 11,000 gallons as of October 1, 2018 after flushing and corrosion mitigation activities. This volume does not include the waste in the annulus (RPP-RPT-44630, Derivation of Best-Basis Inventory for Tank 241-AY-102 as of October 1, 2018).	Table 2-1, Table 4-1
(91)	These 31 tanks are monitored on a quarterly basis per OSD-T-151-00031, *Operating Specifications for Tank Farm Leak Detection and Single-Shell Tank Intrusion Detection*, Table 4.1, Monitoring Device, Frequency, and Tank Specification Limits for MUSTs.	Table 5-1, Table 5-2
(92)	Tank Monitoring identified an intrusion in tank TX-302-C when level trend analysis showed a sharp increase in the level readings following a severe rainstorm on May 13, 2015. Subsequent level increases were also shown to correlate with precipitation events.	Table 5-2

Table 6-1. Waste Tank Summary Report Endnotes (10 pages)

No.	Comment/Reference	Location
(93)	Based on tank level readings in SACS, it has been concluded by the Tank Monitoring Group, Tank and Pipeline Integrity Group and the Design Authority that CR-244-001 has an intrusion. The tank is 19.7' in diameter, has a height of 19' (228") with a calculated volume limit of 220.7" (RPP-CALC-24219, Table1). The current level in the tank is 40.39" which is roughly 4,800 gallons. The current level/volume of waste in the tank is 18.3% of the total calculated volume limit. The surface level in the tank is increasing, on average, 2.5" a year. Based on these calculations it will take an additional 72 years to reach the total calculated volume limit.	Table 5-2
(94)	See RPP-RPT-59272, *Fiscal Year 2016 Visual Inspection Report for Single-Shell Tanks*, for the bases for intrusion decision.	Table 4-4, Table 4-5
(95)	See RPP-RPT-60093, *Fiscal Year 2017 Visual Inspection Report for Single-Shell Tanks*, for the bases for intrusion decision.	Table 4-4
(96)	Visual inspections of the interior of catch tank 241-C-301 were performed on May 4 and May 11, 2018. The inspection included measurements of the current levels of solid and liquid in the tank. The results are summarized in a letter report, Interoffice Memorandum WRPS-1803745 "FY18 Visual Inspection of Tank 241-C-301" (Schofield 2018).	Table 5-1
(97)	See RPP-RPT-60565, *Fiscal Year 2018 Visual Inspection Report for Single-Shell Tanks*, for the bases for intrusion decision.	Table 4-4
(98)	Tank S-104 integrity status was changed from "assumed leaker" to "sound." per RPP-ASMT-62316, *Leak Assessment Report for Tank 241-S-104.*	Table 4-2

DOE	=	U.S. Department of Energy	SST	=	single-shell tank
DST	=	double-shell tank	TWINS	=	Tank Waste Information Network System
Ecology	=	Washington State Department of Ecology	WAC	=	Washington Administrative Code
ORP	=	U.S. Department of Energy, Office of River Protection			

6.2 REFERENCES

24950-WTP-ICD-MG-019, 2013, *ICD 19 – Interface Control Document for Waste Feed*, Rev. 6, Bechtel National, Inc., Richland, Washington.

Baumhardt, R. J., 1989, "Single Shell Tank Leak Volumes," (Letter 8901832B R1 to R. E. Gerton, U.S. Department of Energy, Richland Operations Office, May 15), Westinghouse Hanford Company, Richland, Washington.

Catlin, R. J., 1980, *Assessment of the Surveillance Program of the High-Level Waste Storage Tanks at Hanford*, Office of Environmental Compliance and Review, U.S. Department of Energy, Washington, D.C.

Clark, W. C., 2012, "Contract Number DE AC27 08RV1480 – Washington River Protection Solutions, LLC Tank 241-AY-102 Primary Tank Leak Integrity Change from Sound to Assumed Leaker, and Double-Shell Waste Tank Leak Integrity Definitions," (Letter WRPS-1204634 to T. W. Fletcher, U.S. Department of Energy, Office of River Protection, November 13), Washington River Protection Solutions, LLC, Richland, Washington.

DOE O 435.1, 2001, *Radioactive Waste Management*, Change 1 (Certified 2007), U.S. Department of Energy, Washington, D.C.

Dunning, A. B., 2010, "Contract Number DE AC27 08RV14800 – Washington River Protection Solutions LLC Completion of Performance Based Incentive 1.5, Fee Bearing Milestone 1.5.1, Remove Liquids from the Secondary Containment of the 244-CR Vault – Request For Incremental Fee Approval," (Letter WRPS-1000848 to S. E. Bechtol, U.S. Department of Energy, Office of River Protection, April 28), Washington River Protection Solutions, LLC, Richland, Washington.

Ecology, EPA, and DOE, 1989, *Hanford Federal Facility Agreement and Consent Order – Tri-Party Agreement (TPA)*, as amended, Washington State Department of Ecology, U.S. Environmental Protection Agency, and U.S. Department of Energy, Olympia, Washington.

Fletcher, T. W., 2013a, "The U.S. Department of Energy, Office of River Protection (ORP) Submits the Retrieval Completion Certification and Report for Tank 241-C-104," (Letter 13-TF-0018 to J. A. Hedges, Washington State Department of Ecology, March 21), U.S. Department of Energy, Office of River Protection, Richland, Washington.

Fletcher, T. W., 2013b, "The U.S. Department of Energy, Office of River Protection (ORP) Submits the Retrieval Completion Certification and Report for Tank 241-C-108," (Letter 13-TF-0025 to J. A. Hedges, Washington State Department of Ecology, May 1), U.S. Department of Energy, Office of River Protection, Richland, Washington.

Groth, D. R., 1987, "Liquid Level Losses in Tanks 241-C-201, 202, and 204," (Internal Memorandum 65950-87-517 to R. J. Baumhardt, July 1), Westinghouse Hanford Company, Richland, Washington.

HNF-3233, 1998, *Re-Analysis of SX Farm Leak Histories with the Historical Leak Model Rev. 1 (HLMr1)*, Rev. 1, Washington River Protection Solutions, LLC, Richland, Washington.

HNF-3484, 2009, *Double-Shell Tank Emergency Pumping Guide*, Rev. 10, Washington River Protection Solutions, LLC, Richland, Washington.

HNF-5985, 2000, *ER-311 Flammable Gas Response and Findings*, Rev. 0, CH2M HILL Hanford Group, Inc., Richland, Washington.

HNF-EP-0182, 2005, *Waste Tank Summary Report for Month Ending September 30, 2005*, Rev. 210, CH2M HILL Hanford Group, Inc., Richland, Washington.

HNF-SD-RE-TI-178, 2005, *Single Shell Tank Interim Stabilization Record*, Rev. 9, CH2M HILL Hanford Group, Inc., Richland, Washington.

HNF-SD-WM-OCD-015, 2017, *Tank Farms Waste Transfer Compatibility Program*, Rev. 45, Washington River Protection Solutions, LLC, Richland, Washington.

Jensen, L., and Merril, J. A., 1989, "Estimation of Single Shell Tank Leak Volumes," (Internal Letter 12710-89-042 to R. E. Raymond, March 28), Westinghouse Hanford Company, Richland, Washington.

Lyon, J. J., 2005, "Tank Farm Vadose Zone Contamination Volume Estimates, RPP-23405, Revision 1, released September 6, 2005; Waste Tank Summary Report for August and September 2005, HNF-EP-0182, Revisions 209 and 210," (Letter to R. J. Schepens, U.S. Department of Energy, Office of River Protection, December 22), Washington State Department of Ecology, Richland, Washington.

Olinger, S. J., 2007a, "Submittal of Retrieval Data Report (RDR) for Single-Shell Tank 241-C-103, RPP-RPT-33060, Revision 0," (Letter 07-TPD-026 to J. Hedges, Washington State Department of Ecology, May 21), U.S. Department of Energy, Office of River Protection, Richland, Washington.

Olinger, S. J., 2007b, "Submittal of Demonstration Retrieval Data Report (RDR) for Single-Shell Tank 241-C-204, RPP-RPT-34062, Revision 0," (Letter 07-TPD-043 to J. Hedges, Washington State Department of Ecology, August 9), U.S. Department of Energy, Office of River Protection, Richland, Washington.

Olinger, S. J., 2007c, "Submittal of Retrieval Data Report (RDR) for Single-Shell Tank 241-S-112, RPP-RPT-35112, Revision 0," (Letter 07-TPD-066 to J. Hedges, Washington State Department of Ecology, December 21), U.S. Department of Energy, Office of River Protection, Richland, Washington.

Olinger, S. J., 2007d, "Submittal of Notification of Completion of Liquid Removal from Catch Tank 241-ER-311," (Letter 07-TOD-026 to J. Hedges, Washington State Department of Ecology, March 30), U.S. Department of Energy, Office of River Protection, Richland, Washington.

OSD-T-151-00007, 2018, *Operating Specifications for the Double-Shell Storage Tanks*, Rev. 21, Washington River Protection Solutions, LLC, Richland, Washington.

OSD-T-151-00031, 2017, *Operating Specifications for Tank Farm Leak Detection and Single-Shell Tank Intrusion Detection*, Rev. 12, Washington River Protection Solutions, LLC, Richland, Washington.

PNL-4688, 1983, *Assessment of Single-Shell Tank Residual Liquid Issues at Hanford Site*, Washington, Pacific Northwest Laboratory, Richland, Washington.

RHO-RE-SR-14, 1984, *Waste Status Summary*, Rockwell Hanford Operations, Richland, Washington.

RP-CHG-TANKFARM-2001-0014, 2001, "Catch Tank 152-AX Was Identified as a Potential Leaking Tank," CH2M HILL Hanford Group, Inc., Richland, Washington.

RP-CHG-TANKFARM-2002-0083, 2002, "Video Surveillance Reveals Catch Tank TA-R1 Floating Off Of Its Foundation at 242-TA Vault," CH2M HILL Hanford Group, Inc., Richland, Washington.

RPP-10006, 2017, *Methodology and Calculations for the Assignment of Waste Groups for the Large Underground Waste Storage Tanks at the Hanford Site*, Rev. 14, Washington River Protection Solutions, LLC, Richland, Washington.

RPP-12051, 2003, *244-AR Vault Interim Stabilization Completion Report*, Rev. 0, CH2M HILL Hanford Group, Inc., Richland, Washington.

RPP-13019, 2003, *Determination of Hanford Waste Tank Volumes*, Rev. 0, CH2M HILL Hanford Group, Inc., Richland, Washington.

RPP-20577, 2007, *Stage II Retrieval Data Report for Single Shell Tank 241-C-106*, Rev. 0, CH2M HILL Hanford Group, Inc., Richland, Washington.

RPP-23405, 2005, *Tank Farm Vadose Zone Contamination Volume Estimates*, Rev. 1, CH2M HILL Hanford Group, Inc., Richland, Washington.

RPP-29441, 2006, *Post-Retrieval Waste Volume Determination for Single Shell Tank 241-C-201*, Rev. 0, CH2M HILL Hanford Group, Inc., Richland, Washington.

RPP-32681, 2013, *Process to Assess Tank Farm Leaks in Support of Retrieval and Closure Planning*, Rev. 2, Washington River Protection Solutions, LLC, Richland, Washington.

RPP-ASMT-33741, 2007, *Tank 241-EW-151 Leak Assessment Report*, Rev. 0, CH2M HILL Hanford Group, Inc., Richland, Washington.

RPP-ASMT-35057, 2007, *Tank 240-S-302 Leak Assessment Report*, Rev. 0, CH2M HILL Hanford Group, Inc., Richland, Washington.

RPP-ASMT-38219, 2008, *Tank 241-C-110 Leak Assessment Report*, Rev. 0, CH2M HILL Hanford Group, Inc., Richland, Washington.

RPP-ASMT-39155, 2008, *Tank 241-C-111 Leak Assessment Report*, Rev. 0, CH2M HILL Hanford Group, Inc., Richland, Washington.

RPP-ASMT-42278, 2009, *Tank 241-A-103 Leak Assessment Report*, Rev. 0, Washington River Protection Solutions, LLC, Richland, Washington.

RPP-ASMT-42628, 2014, *Tank 241-AX-102 Integrity Assessment Report*, Rev. 0, Washington River Protection Solutions, LLC, Richland, Washington.

RPP-ASMT-46452, 2010, *Tank 241-C-105 Leak Assessment Report*, Rev. 0, Washington River Protection Solutions, LLC, Richland, Washington.

RPP-ASMT-47140, 2010, *Tank 241-SX-110 Leak Assessment Report*, Rev. 0, Washington River Protection Solutions, LLC, Richland, Washington.

RPP-ASMT-48143, 2011, *Tank 241-SX-104 Leak Assessment Completion Report*, Rev. 0, Washington River Protection Solutions, LLC, Richland, Washington.

RPP-ASMT-53793, 2012, *Tank 241-AY-102 Leak Assessment Report*, Rev. 0, Washington River Protection Solutions, LLC, Richland, Washington.

RPP-ASMT-57574, 2014, *Tank 241-AX-104 Integrity Assessment Report*, Rev. 0, Washington River Protection Solutions, LLC, Richland, Washington.

RPP-ASMT-62316, 2018, *Leak Assessment Report for Tank 241-S-104*, Rev. 0, Washington River Protection Solutions, LLC, Richland, Washington.

RPP-CALC-24219, 2005, *244 CR Vault Tank and Cell Volume Calculations*, Rev. 0, CH2M HILL Hanford Group, Inc., Richland, Washington.

RPP-CALC-33163, 2007, *Tank Waste Volume and Level Calculations in Dome Space for 241-AP Tank Farm Up to 460 Inches*, Rev. 0, CH2M HILL Hanford Group, Inc., Richland, Washington.

RPP-CALC-52903, 2014, *Retrieval Performance of Tank 241-C-107 Using the Bulk Mobile Arm Retrieval System*, Rev. 3, Washington River Protection Solutions, LLC, Richland, Washington.

RPP-CALC-54266, 2013, *Post-Hard Heel Retrieval Camera/CAD Modeling System Waste Volume Estimate for Tank 241-C-108*, Rev. 0, Washington River Protection Solutions, LLC, Richland, Washington.

RPP-CALC-54284, 2013, *Post-Hard Heel Retrieval Camera/CAD Modeling System Waste Volume Estimate for Tank 241-C-104*, Rev. 0, Washington River Protection Solutions, LLC, Richland, Washington.

RPP-CALC-54759, 2013, *Post-Hard Heel Retrieval Camera/CAD Modeling System Waste Volume Estimate for Tank 241-C-019*, Rev. 0, Washington River Protection Solutions, LLC, Richland, Washington.

RPP-CALC-56399, 2013, *Post-Hard Heel Retrieval Camera/CAD Modeling System Waste Volume Estimate for Tank 241-C-110*, Rev. 0, Washington River Protection Solutions, LLC, Richland, Washington.

RPP-CALC-56434, 2013, *Post-Retrieval Camera/CAD Modeling System Waste Volume Estimate for Tank 241-C-101*, Rev. 0, Washington River Protection Solutions, LLC, Richland, Washington.

RPP-CALC-56856, 2014, *Estimated Waste Volume Remaining in Single-Shell Tank 241-C-112 after Hard Heel Retrieval*, Rev. 0, Washington River Protection Solutions, LLC, Richland, Washington.

RPP-CALC-60933, *2016, Residual Waste Volume of Tank 241-C-105 Following Operations of MARS-V System*, Rev. 0, Washington River Protection Solutions, LLC, Richland, Washington.

RPP-CALC-61081, 2017, *241-AY-102 Waste Retrieval Tracking*, Rev. 1, Washington River Protection Solutions, LLC, Richland, Washington.

RPP-ENV-33418, 2012, *Hanford C Farm Leak Assessments Report*, Rev. 2A, Washington River Protection Solutions, LLC, Richland, Washington.

RPP-ENV-37956, 2014, *Hanford 241-A/AX Farm Leak Inventory Assessment Report*, Rev. 2, Washington River Protection Solutions, LLC, Richland, Washington.

RPP-ENV-39658, 2010, *Hanford SX-Farm Leak Assessments Report*, Rev. 0, Washington River Protection Solutions, LLC, Richland, Washington.

RPP-PLAN-59931, 2014, *AY-102 Recovery Project Waste Retrieval Work Pla*n, Rev. 2, Washington River Protection Solutions, LLC, Richland, Washington.

RPP-RPT-24257, 2005, *244-CR Vault Liquid Level Assessment and Video Inspection Completion Report*, Rev. 0, CH2M HILL Hanford Group, Inc., Richland, Washington.

RPP-RPT-26475, 2008, *Retrieval Data Report for Single Shell Tank 241-C-203*, Rev. 1A, CH2M HILL Hanford Group, Inc., Richland, Washington.

RPP-RPT-29095, 2006, *Retrieval Data Report for Single Shell Tank 241-C-202*, Rev. 0, CH2M HILL Hanford Group, Inc., Richland, Washington.

RPP-RPT-29163, 2006, *Tank 241-ER-311 Leak Assessment Report*, Rev. 0, CH2M HILL Hanford Group, Inc., Richland, Washington.

RPP-RPT-29711, 2006, *Tank 241-UX-302A Leak Assessment Report*, Rev. 0, CH2M HILL Hanford Group, Inc., Richland, Washington.

RPP-RPT-31779, 2006, *241-UX-302A Catch Tank Liquid Mitigation Completion Report*, Rev. 0, CH2M HILL Hanford Group, Inc., Richland, Washington.

RPP-RPT-33060, 2007, *Retrieval Data Report for Single Shell Tank 241-C-103*, Rev. 0, CH2M HILL Hanford Group, Inc., Richland, Washington.

RPP-RPT-34062, 2007, *Retrieval Data Report for Single Shell Tank 241-C-204*, Rev. 0, CH2M HILL Hanford Group, Inc., Richland, Washington.

RRP-RPT-35112, 2007, *Retrieval Data Report for Single Shell Tank 241-S-112*, Rev. 0, CH2M HILL Hanford Group, Inc., Richland, Washington.

RPP-RPT-42296, 2010, *Hanford TY-Farm Leak Assessments Report*, Rev. 0, Washington River Protection Solutions, LLC, Richland, Washington.

RPP-RPT-42789, 2009, *Completion of Removal of Pumpable Liquid From 241-UX-302A*, Rev. 0, Washington River Protection Solutions, LLC, Richland, Washington.

RPP-RPT-44630, Derivation of Best-Basis Inventory for Tank 241-AY-102 as of October 1, 2018, Rev. 15, Washington River Protection Solutions, LLC, Richland, Washington

RPP-RPT-45147, 2018, *Derivation of Best-Basis Inventory for Tank 241-C-108 as of April 1, 2018*, Rev.6, Washington River Protection Solutions, LLC, Richland, Washington.

RPP-RPT-45845, 2010, *Completion of Pumpable Liquids Removal from 244-CR Vault*, Rev. 0, Washington River Protection Solutions, LLC, Richland, Washington.

RPP-RPT-46616, 2018, *Derivation of Best-Basis Inventory for Tank 241-C-104 as of April 1, 2018*, Rev. 9, Washington River Protection Solutions, LLC, Richland, Washington.

RPP-RPT-48459, 2016, *Derivation of Best-Basis Inventory for Tank 241-C-111 as of June 28, 2016,* Rev. 3, Washington River Protection Solutions, LLC, Richland, Washington.

RPP-RPT-48745, 2017, *Derivation of Best-Basis Inventory for Tank 241-C-107 as of May 1, 2017*, Rev. 10, Washington River Protection Solutions, LLC, Richland, Washington.

RPP-RPT-49876, 2018, *Derivation of Best-Basis Inventory for Tank 241-C-110 as of May 1, 2018*, Rev. 4, Washington River Protection Solutions, LLC, Richland, Washington.

RPP-RPT-50799, 2015, *Suspect Water Intrusion in Single-Shell Tanks*, Rev. 2, Washington River Protection Solutions, LLC, Richland, Washington.

RPP-RPT-51343, 2016, *Derivation of Best-Basis Inventory for Tank 241-C-109 as of April 1, 2018,* Rev. *6,* Washington River Protection Solutions, LLC, Richland, Washington.

RPP-RPT-52516, 2015, *Derivation of Best-Basis Inventory For Tank 241-C-112 as of March 3, 2015,* Rev. 3, Washington River Protection Solutions, LLC, Richland, Washington.

RPP-RPT-54964, 2014, *Evaluation of Tank 241-T-111 Level Data and In Tank Video Inspection*, Rev. 2, Washington River Protection Solutions, LLC, Richland, Washington.

RPP-RPT-57458, 2016, *Derivation of Best-Basis Inventory for Tank 241-C-102 as of March 16, 2016*, Rev. 6, Washington River Protection Solutions, LLC, Richland, Washington.

RPP-RPT-58071, 2018, *Derivation of Best-Basis Inventory for Tank 241-C-105 as of November 1, 2018, Rev. 6,* Washington River Protection Solutions, LLC, Richland, Washington.

RPP-RPT-58156, 2014, *Basis for Miscellaneous Underground Storage Tanks and Special Surveillance Facilities Waste Volumes Published in HNF-EP-0182 Revision 320 "Waste Tank Summary Report for Month Ending August 31, 2014*," Rev. 0, Washington River Protection Solutions, LLC, Richland, Washington.

RPP-RPT-58788, 2015, *Retrieval Completion Certification Report for Tank C-102,* Rev. 0, Washington River Protection Solutions, LLC, Richland, Washington.

RPP-RPT-58849, 2015, *Fiscal Year 2015 Visual Inspection Report for Single-Shell Tanks*, Rev. 0, Washington River Protection Solutions, LLC, Richland, Washington.

RPP-RPT-58929, 2016, *Derivation of Best-Basis Inventory for Tank 241-C-201 as of October 1, 2016*, Rev. 0, Washington River Protection Solutions, LLC, Richland, Washington.

RPP-RPT-59004, 2015, *Post Retrieval Camera. CAD Modeling System Waste Volume Estimate for Tank 241-C-102,* Rev. 0, Washington River Protection Solutions, LLC, Richland, Washington.

RPP-RPT-59272, 2017, *Fiscal Year 2016 Visual Inspection Report for Single-Shell Tanks*, Rev. 0, Washington River Protection Solutions, LLC, Richland, Washington.

RPP-RPT-59377, 2016, *Post-Retrieval Camera/CAD Modeling System Waste Volume Estimate for Tank 241-C-111,* Rev. 00, Washington River Protection Solutions, LLC, Richland, Washington.

RPP-RPT-59556, 2016, *Tank 241-AY-102 Monthly Monitoring Report June 2016*, Rev. 0, Washington River Protection Solutions, LLC, Richland, Washington.

RPP-RPT-59601, 2016, *Tank 241-AY-102 Monthly Monitoring Report July 2016,* Rev. 0, Washington River Protection Solutions, LLC, Richland, Washington.

RPP-RPT-59683, 2016, *Tank 241-AY-102 Monthly Monitoring Report August 2016,* Rev. 0, Washington River Protection Solutions, LLC, Richland, Washington.

RPP-RPT-59728, 2017, *Retrieval Completion Status Report for Tank 241-AY-102,* Rev. 0, Washington River Protection Solutions, LLC, Richland, Washington.

RPP-RPT-59792, 2016, *Tank 241-AY-102 Monthly Monitoring Report October 2016,* Rev. 0, Washington River Protection Solutions, LLC, Richland, Washington.

RPP-RPT-59836, 2016, *Tank 241-AY-102 Monthly Monitoring Report November 2016,* Rev. 0, Washington River Protection Solutions, LLC, Richland, Washington.

RPP-RPT-59885, 2017, *Tank 241-AY-102 Monthly Monitoring Report December 2016,* Rev. 0, Washington River Protection Solutions, LLC, Richland, Washington

RPP-RPT-59855, 2017, *Derivation of Best-Basis Inventory for Tank 241-C-202 as of January 1, 2017,* Rev. 0, Washington River Protection Solutions, LLC, Richland, Washington.

RPP-RPT-60093, 2018, *Fiscal Year 2017 Visual Inspection Report for Single-Shell Tanks,* Rev. 0, Washington River Protection Solutions, LLC, Richland, Washington.

RPP-RPT-60196, 2017, *Tank 241-AY-102 Monthly Monitoring Report May 2017,* Rev. 0, Washington River Protection Solutions, LLC, Richland, Washington.

RPP-RPT-60241, 2017, *Tank 241-AY-102 Monthly Monitoring Report June 2017,* Rev. 0, Washington River Protection Solutions, LLC, Richland, Washington.

RPP-RPT-60344, 2017, *Tank 241-AY-102 Monthly Monitoring Report July 2017,* Rev. 0, Washington River Protection Solutions, LLC, Richland, Washington.

RPP-RPT-60435, 2017, *Tank 241-AY-102 Monthly Monitoring Report September 2017,* Rev. 0, Washington River Protection Solutions, LLC, Richland, Washington.

RRP-RPT-60377, 2017 *Derivation of Best-Basis Inventory for Tank 241-S-112 as of September 1, 2017,* Rev. 0, Washington River Protection Solutions, LLC, Richland, Washington.

RPP-RPT-60565, 2018, *Fiscal Year 2018 Visual Inspection Report for Single-Shell Tanks,* Rev. 0, Washington River Protection Solutions, LLC, Richland, Washington

RPP-RPT-60584, 2017, *Tank 241-AY-102 Monthly Monitoring Report November 2017,* Rev. 0, Washington River Protection Solutions, LLC, Richland, Washington.

RPP-RPT-60713, 2018, *Tank 241-AY-102 Monthly Monitoring Report January 2018*, Rev. 0, Washington River Protection Solutions, LLC, Richland, Washington.

RPP-RPT-60717, 2018, *Retrieval Completion Certification Report for Tank 241-C-105, Rev. 0,* Washington River Protection Solutions, LLC, Richland, Washington.

RPP-RPT-60731, *2018, Post-Retrieval Camera/CAD Modeling System Waste Volume Estimate for Tank 242-C-105, Rev. 0,* Washington River Protection Solutions, LLC, Richland, Washington.

Sax, S. M., 2010, "Contract Number DE AC27 08RV14800 – Washington River Protection Solutions, LLC Transmittal of the Single-Shell Tank Interim Stabilization Evaluation Report for Tank 241-S-102," (Letter WRPS-1000772 R1 to S. L. Charboneau, U.S. Department of Energy, Office of River Protection, June 1), Washington River Protection Solutions, LLC, Richland, Washington.

Schepens, R. J., 2006a, "Process for Reaching Agreement on Tank Farm Vadose Zone Leak Loss Estimate," (Letter 06-TPD-059 to J. Hedges, Washington State Department of Ecology, August 18), U.S. Department of Energy, Office of River Protection, Richland, Washington.

Schepens, R. J., 2006b, "Submittal of the Demonstration Retrieval Data Report (RDR) for Single-Shell Tank 241-C-201, RPP-RPT-30181, Revision 0A," (Letter 06-TPD-071 to J. Hedges, Washington State Department of Ecology, November 2), U.S. Department of Energy, Office of River Protection, Richland, Washington.

Schepens, R. J., 2006c, "Submittal of Demonstration Retrieval Data Report (RDR) for Single-Shell Tank C-202, RPP-RPT-29095, Rev. 0," (Letter 06-TPD-051 to J. Hedges, Washington State Department of Ecology, July 31), U.S. Department of Energy, Office of River Protection, Richland, Washington.

Schepens, R. J., 2006d, "Submittal of Demonstration Retrieval Data Report (RDR) for Single-Shell Tank C-203, RPP-RPT-26475, Rev. 1," (Letter 06-TPD-005 to J. Hedges, Washington State Department of Ecology, January 18), U.S. Department of Energy, Office of River Protection, Richland, Washington.

Schepens, R. J., 2006e, "Notification of Completion of Pumping Liquids from Catch Tank 244-UX302A and Start of Evaporation of Liquid from Catch Tank 241-ER-311," (Letter 06-TOD-090 to J. Hedges, Washington State Department of Ecology, November 1), U.S. Department of Energy, Office of River Protection, Richland, Washington.

Schofield, J. S., 2018, "FY18 Visual Inspection of Tank 241-C-301," (Interoffice Memorandum WRPS-1803745 to R.E. Mendoza, September 10), Washington River Protection Solutions, LLC, Richland, Washington.

SD-WM-SAR-006, 1986, *Single-Shell Tank Isolation Safety Analysis Report*, Rev. 2, Rockwell Hanford Operations, Richland, Washington.

Smith, K. W., 2013a, "The U.S. Department of Energy, Office of River Protection (ORP) Submits the Retrieval Completion Certification and Report for Tank 241-C-109," (Letter 13-TF-0037 to J. A. Hedges, Washington State Department of Ecology, June 4), U.S. Department of Energy, Office of River Protection, Richland, Washington.

Smith, K. W., 2013b, "The U.S. Department of Energy, Office of River Protection (ORP) Submits the Retrieval Completion Certification and Report for Tank 241-C-108," (Letter 13-TF-0120 to J. A. Hedges, Washington State Department of Ecology, November 27), U.S. Department of Energy, Office of River Protection, Richland, Washington.

Smith, K. W., 2014a, "The U.S. Department of Energy, Office of River Protection Submits the Retrieval Completion Certification and Report for Tank 241-C-110," (Letter 14-TF-0007 to J. A. Hedges, Washington State Department of Ecology, January 29), U.S. Department of Energy, Office of River Protection, Richland, Washington.

Smith, K. W., 2014b, "The U.S. Department of Energy, Office of River Protection Submits the Retrieval Completion Certification and Report for Tank 241-C-101," (Letter 14-TF-0113 to J. A. Hedges, Washington State Department of Ecology, September 24), U.S. Department of Energy, Office of River Protection, Richland, Washington.

Smith, K. W., 2014c, "The U.S. Department of Energy, Office of River Protection Submits the Retrieval Completion Certification and Report for Tank 241-C-107," (Letter 14-TF-0114 to J. A. Hedges, Washington State Department of Ecology, September 30), U.S. Department of Energy, Office of River Protection, Richland, Washington.

Smith, K. W., 2014d, "The U.S. Department of Energy, Office of River Protection Submits the Retrieval Completion Certification and Report for Tank 241-C-112," (Letter 14-TF-0115 to J. A. Hedges, Washington State Department of Ecology, September 30), U.S. Department of Energy, Office of River Protection, Richland, Washington.

Smith, K. W., 2014e, "The U.S. Department of Energy, Office of River Protection Submits the Retrieval Completion Certification and Report for Tank 241-C-104," (Letter 14-TF-0013 to J. A. Hedges, Washington State Department of Ecology, February 18), U.S. Department of Energy, Office of River Protection, Richland, Washington.

Smith, K. W., 2014f, "The U.S. Department of Energy, Office of River Protection Submits the Retrieval Completion Certification and Report for Tank 241-C-109," (Letter 14-TF-0020 to J. A. Hedges, Washington State Department of Ecology, March 13), U.S. Department of Energy, Office of River Protection, Richland, Washington.

Smith, K. W., 2014g, "The U.S. Department of Energy, Office of River Protection Submits the Retrieval Completion Certification and Report for Tank 241-C-110," (Letter 14-TF-0086 to J. A. Hedges, Washington State Department of Ecology, August 6), U.S. Department of Energy, Office of River Protection, Richland, Washington.

Smith, K. W., 2015a, "The U.S. Department of Energy, Office of River Protection Submits the Retrieval Completion Certification Report for Tank 241-C-102," (Letter 15-TF-0116 to J. A. Hedges, Washington State Department of Ecology, November 30), U.S. Department of Energy, Office of River Protection, Richland, Washington.

Smith, K. W., 2015b, "The U.S. Department of Energy, Office of River Protection Submits the Retrieval Completion Certification Report for Tank 241-C-101," (Letter 15-TF-0099 to J. A. Hedges, Washington State Department of Ecology, September 24), U.S. Department of Energy, Office of River Protection, Richland, Washington.

Smith, K. W., 2015c, "The U.S. Department of Energy, Office of River Protection Submits the Retrieval Completion Certification Report for Tank 241-C-112," (Letter 15-TF-0098 to J. A. Hedges, Washington State Department of Ecology, September 30), U.S. Department of Energy, Office of River Protection, Richland, Washington.

Smith, K. W., 2015d, "The U.S. Department of Energy, Office of River Protection Submits the Retrieval Completion Certification Report for Tank 241-C-107," (Letter 15-TF-0086 to J. A. Hedges, Washington State Department of Ecology, September 14), U.S. Department of Energy, Office of River Protection, Richland, Washington.

Smith, K. W., 2016a, "The U.S. Department of Energy, Office of River Protection Submits the Retrieval Completion Certification Report for Tank 241-C-111," (Letter 16-TF-0090 to Alexandra K. Smith, Washington State Department of Ecology, August 29), U.S. Department of Energy, Office of River Protection, Richland, Washington.

Smith, K. W., 2016b, "The U.S. Department of Energy, Office of River Protection Submits the Retrieval Data Report for Tank 241-C-102," (Letter 16-TF-0115 to A. K. Smith, Washington State Department of Ecology, October 11, 2016), U.S. Department of Energy, Office of River Protection, Richland, Washington.

Smith, K. W., 2017a, "The U.S. Department of Energy, Office of River Protection and Washington River Protection Solutions LLC Completion of II.B.5.A of the 241-AY-102 Settlement Agreement" (Letter 17-TF-0021 to Alexandra K. Smith, Washington State Department of Ecology, February 23), U.S. Department of Energy, Office of River Protection, Richland, Washington.

Smith, K. W., 2017b, "The U.S. Department of Energy, Office of River Protection and Washington River Protection Solutions Completion of II.B.5.B of the 241-AY-102 Settlement Agreement" (Letter 17-TF-0030 to Alexandra K. Smith, Washington State Department of Ecology, March 13), U.S. Department of Energy, Office of River Protection, Richland, Washington.

Smith, K. W., 2017c, "The U.S. Department of Energy, Office of River Protection Submits the Retrieval Data Report for Tank 241-C-111," (Letter 17-TPD-0018 to A. K. Smith, Washington State Department of Ecology, August 11, 2017), U.S. Department of Energy, Office of River Protection, Richland, Washington.

TOC-ENV-NOT-2017-4352, 2017, Completion of Limit of Technology for AY-102 Retrieval, Environmental Operational Activities Notification, Washington River Protections Solutions, LLC, Richland, Washington.

TFC-ENG-CHEM-D-42, 2013, "Tank Leak Assessment Process," Rev. B-7, Washington River Protections Solutions, LLC, Richland, Washington.

TFC-WO-11-5930 WCN-2, 2012, "241-UX-302A Pumping Liquid out of Tank," Washington River Protections Solutions, LLC, Richland, Washington.

Vance, B. T., 2018, "The U. S. Department of Energy Office of River Protection Submits the Retrieval Completion Certification Report for Tank 241-C-105," (Letter 18-TF-0044 to A. K. Smith, Washington State Department of Ecology, June 28, 2018), U.S. Department of Energy, Office of River Protection, Richland, Washington.

WAC 173-303-070, "Dangerous Waste Regulations," Section 70, "Designation of Dangerous Waste," *Washington Administrative Code*, as amended, Washington State Department of Ecology, Olympia, Washington.

WHC-EP-0410, 1991, *Tank 241-A-105 Evaporation Estimate 1970 through 1978*, Westinghouse Hanford Company, Richland, Washington.

WHC-MR-0132, 1990, *A History of the 200 Area Tank Farms*, Westinghouse Hanford Company, Richland, Washington.

WHC-MR-0264, 1991, *Tank 241-A-105 Leak Assessment*, Westinghouse Hanford Company, Richland, Washington.

WHC-MR-0300, 1992, *Tank 241-SX-108 Leak Assessment*, Westinghouse Hanford Company, Richland, Washington. WHC-MR-0301, 1992, *Tank 241-SX-109 Leak Assessment*, Westinghouse Hanford Company, Richland, Washington.

WHC-MR-0302, 1992, *Tank 241-SX-115 Leak Assessment*, Westinghouse Hanford Company, Richland, Washington.

WHC-SD-EN-TI-185, 1993, *Assessment of Unsaturated Zone Radionuclide Contamination Around Single Shell Tanks 241-C-105 and 241-C-106*, Rev. 0-A, Westinghouse Hanford Company, Richland, Washington.

WHC-SD-WM-SAR-040, 1991, *Safety Analysis Report for the 204-AR Waste Unloading Facility*, Rev. 1, Westinghouse Hanford Company, Richland, Washington.

WHC-SD-WM-TI-356, 1988, *Waste Storage and Leak Detection Criteria*, Rev. 0, Westinghouse Hanford Company, Richland, Washington.

WHC-TANKFARM-1992-0073, 1992, "Apparent Decrease in Liquid Level in Single Shell Underground Storage Tank 241-T-101, Leak Suspected; Investigation Continuing," Westinghouse Hanford Company, Richland, Washington.

WHC-TANKFARM-1994-0009, 1994, "Apparent Liquid Level Decrease in Single Shell Underground Storage Tank 241-T-111; Declared an Assumed Re-Leaker," Westinghouse Hanford Company, Richland, Washington.

7.0 APPENDIX A – GLOSSARY

Term (abbreviation)	Definition or expansion
Administratively Interim Stabilized	A tank that meets interim stabilization criteria without the use of a jet pump, typically tanks that contained small waste inventories or experienced high rates of evaporation.
Annulus	The space between the inner and outer shells in DSTs only. Drain channels in the insulating and/or supporting concrete carry any leakage to the annulus space where ENRAF gauges are installed. The ENRAF gauges are the primary means of leak detection for all DSTs. The leak detection system may not be replaced by, but may be supplemented by, the operation of an annulus ventilation system CAM.
Annulus Pump Pit	The DST concrete pit used for the pump and piping required to empty waste from the annular space between the primary tank and secondary tank in the event of a leak from the primary tank. The annulus pump pit is connected to the DST center pump pit via installed underground piping; from the center pump pit, the waste will be returned to the primary tank or transferred to another DST. Primary tank emergency pumping using the annulus pump pit is described in HNF-3484.[a]
Assumed Leaker[b]	The integrity classification of a waste storage tank for which surveillance data indicates a loss of liquid to the environment attributed to a breach of integrity.
Assumed Leaker – Primary Tank[b]	The integrity classification of a DST for which surveillance data indicate a loss of liquid attributed to a breach of primary tank integrity.
Characterization	An understanding of the Hanford tank waste chemical, physical, and radiological properties to the extent necessary to ensure safe storage and interim operation, and ultimate disposition of the waste.
Closure	Final closure of the operable units (tank farms) is defined as regulatory approval of completion of closure actions and commencement of post-closure actions. Per the *Hanford Federal Facility Agreement and Consent Order*[c] Change Control Form, Change Number M-45-02-03, all units located within the boundary of each tank farm will be closed in accordance with WAC 173-303-610.[d]
Continuous Air Monitor (CAM)	The CAM passes a small portion of the DST annulus space exhaust airstream through filter paper that is continuously monitored for radiation. If airborne radioactive contamination is present in the annulus, it will collect on the filter paper. When the radiation count rate exceeds the preset alarm threshold, local and remote alarms are triggered.
Drainable Interstitial Liquid (DIL)	The DIL is calculated based on saltcake and sludge volumes and calculated porosity values. Interstitial liquid is the liquid that fills the interstitial spaces of the solid waste. The sum of the interstitial liquid contained in saltcake and sludge minus an adjustment for capillary height is the initial volume of DIL. Interstitial liquid that is not held in place by capillary forces will, therefore, migrate or move with gravity.
Drywells	Drywells are open bottom 6-in. or 8-in. steel casings placed vertically around an SST perimeter, and extending between 75 ft and 200 ft below-grade. Historically, the drywells were monitored with gross gamma radiation logging tools as part of a secondary leak monitoring system. In some cases, neutron probes were used to monitor moisture in the soil as a function of well depth, which could be indicative of tank leakage. The routine gross gamma logging data were stored electronically from 1974 through 1994; a program was initiated in 1995 to log each of the available drywells in each tank farm with a spectral gamma logging system. The spectral gamma logging system provides quantitative values for gamma-emitting radionuclides. The baseline spectral gamma logging database is available electronically. The terms “drywells” and “boreholes” are used interchangeably.

Term (abbreviation)	Definition or expansion
ENRAF 854 ATG Level Detector	The ENRAF gauge, fabricated by Honeywell, determines waste level by detecting variations in the weight of a displacer lowered to the tank waste surface. ENRAF gauges transmit digital level data to the TMACS via an ENRAF computer interface unit. The computer interface unit allows fully remote communication with the gauge, minimizing tank farm entry.
Interim Stabilization	A tank that contains less than 50 kgal of DIL and less than 5 kgal of supernatant is interim-stabilized. If a jet pump was used to achieve interim stabilization, the jet pump flow or saltwell screen inflow must also have been at or below 0.05 gal/min before interim stabilization criteria are met.
Interstitial Liquid Level	The height of the residual liquid occupying the interstitial spaces in the solid waste heel of an interim stabilized SST.
Intrusion Prevention	The administrative designation reflecting the completion of the physical effort required to minimize the addition of liquids into an inactive storage tank, process vault, sump, catch tank, or diversion box. Under no circumstances are electrical or instrumentation devices disconnected or disabled during the intrusion prevention process (with the exception of the electrical pump), in accordance with SD-WM-SAR-006.[e]
Jet Pump	The centrifugal pump and jet assembly used to pump the interstitial liquid from the saltwell screen into the pump pit, nominally a 40-ft elevation rise. Pumping rates vary from 0.05 to about 4 gal/min.
Laterals	Laterals are horizontal drywells positioned 8 to 10 ft under SSTs, three per tank, to detect radionuclides in the soil that could be indicative of tank leakage. These drywells can be monitored by radiation detection probes. Laterals are located only in A and SX Farms. There are currently no functioning laterals and no plan to prepare them for use.
Leak Detection Pits	Enclosed sumps collect drainage from the concrete foundations of the four AX Farm SSTs and the 28 DSTs. In the event of a breach of containment of the SST or the DST secondary tank, the leak detection pit drain system collects leakage from the drain channels cast in the foundation and directs it to the leak detection pit where it can be pumped to a nearby sound DST. A leak is detected by an increase in the leak detection pit liquid level. Only DST leak detection pits are monitored for increases.
Liquid Observation Well (LOW)	In-tank LOWs are used for monitoring the interstitial liquid level in SSTs. The wells are usually constructed of fiberglass or TEFZEL[f] F-reinforced epoxy-polyester resin. A few LOWs are constructed of steel. Gamma and neutron probes are used to monitor changes in the interstitial liquid level and can indicate intrusions or leakage by increases or decreases in the interstitial liquid level. OSD-T-151-00031,[g] identifies which LOWs are designated as the primary monitoring device in the SSTs. All of the SST LOWs are monitored quarterly. Two LOWs installed in DSTs SY-102 and AW-103 are used for special, rather than routine, surveillance purposes only.
Modified Sluicing	Modified sluicing sprays supernatant or water onto the surface of SST waste to mobilize it to a slurry and direct it to the inlet of the slurry pump. The pump transfers the slurry to a DST where the slurry is allowed to settle out. The clarified liquid is pumped back to the SST sluicers for reuse. The method is referred to as *modified sluicing* to differentiate it from historical *past-practice sluicing* that used significantly higher sluice pressures and flow rates, and greater volumes.
Nominal Volume of Remaining Waste	Nominal volume of remaining waste is the best estimate of residual volume following retrieval. Retrieval data reports also provide the 95 percent upper confidence level volume as the bounding estimate of remaining waste.

Term (abbreviation)	Definition or expansion
Primary Tank	The metal inner tank of the DST structure that holds the radioactive liquid waste. The primary tank is constructed of high strength, stress-relieved steel to minimize the potential for cracking, and is monitored for corrosion and leakage once placed in service.
Retrieval	Retrieval is the process of removing, to the maximum extent practical, all the waste from a given underground storage tank. The retrieval process is selected specific to each tank and accounts for the waste type stored and the access and support systems available. Per OSD-T-151-00031,[g] a tank is officially in "retrieval status" if one of two conditions is met: (1) waste has been physically removed from the tank by retrieval operations, or (2) preparations for retrieval operations are directly responsible for rendering the leak or intrusion monitoring instrument "out-of-service."
Saltcake	Saltcake is soluble salts in waste storage tanks formed by the evaporation of liquid waste from nuclear reactor fuels reprocessing, and is characterized by high porosity, interstitial liquid drainability, and crystalline texture.
Saltwell Screen	The saltwell screen is a 10-in. diameter casing consisting of a stainless steel saltwell screen welded to a Schedule 40 carbon steel pipe. The casing and screen are to be inserted into a 12-in. tank riser located in the pump pit. The stainless steel screen portion of the system extends through the tank waste to near the bottom of the tank.
Secondary Tank	The metal outer tank of the DST structure that holds radioactive liquid waste in the event of a breach in the primary tank. The annular space between the primary and secondary tanks is equipped with continuous leak detection to provide early warning of a primary tank leak and an access pit for insertion of emergency pumping equipment.
Sludge	Sludge is the insoluble hydrated metal oxides and fission products in waste storage tanks from nuclear reactor fuels reprocessing, and is characterized by low porosity, reduced interstitial liquid drainability, and mud-like texture.
Sound[a]	The integrity classification of a waste storage tank for which surveillance data indicates no loss of liquid attributed to a breach of integrity.
Supernatant	Supernatant is the liquid above the solids or in large liquid pools in waste storage tanks.
Surface Levels	The surface level in all waste storage tanks is monitored by manual tape probes or ENRAF gauges, and recorded and transmitted via the surveillance analysis computer system.
Thermocouple Tree	A thermocouple tree is installed in tanks to collect temperature data for process control and for determining compliance with temperature-based operating specifications. The thermocouple tree is typically a closed, 2-in. diameter steel pipe extending to within 6-in. of the tank bottom. Eighteen or more thermocouples are placed inside the pipe, spaced at vertical intervals of 6-in. to about 24-in., depending on the thermocouple design and intended purpose. Thermocouple leads terminate above-grade in a terminal box monitored locally or by TMACS. SST thermocouple trees that fail are not replaced.
Total Waste	For purposes of this document, total waste is solids volume (sludge and saltcake, including liquids) plus supernatant.
Weight Factor	The weight factor is an indirect method of determining the tank liquid level by measuring the air pressure necessary to overcome the hydrostatic head in an open-end vertical steel pipe terminated about 2-in. above the tank floor. The "uncorrected weight factor" is the difference between the hydrostatic head pressure in the pipe and the air pressure in the tank headspace, expressed in inches of water. To eliminate the liquid density bias that affects the uncorrected weight factor measurement, a second vertical pipe is located in the liquid, terminated 10-in. above the first pipe. The difference in hydrostatic head between the two pipes is converted to specific gravity (i.e., ratio of the liquid density to water density); the uncorrected weight factor divided by the specific gravity yields the "corrected weight factor," which is the true liquid height in the tank.

Term (abbreviation)	Definition or expansion
Zip Cord	The zip cord is a primitive liquid level detection device consisting of a calibrated insulated wire pair to which electrodes have been attached. To make the measurement, the zip cord is slowly lowered to a point where the liquid surface is contacted by the electrodes. The liquid level reading is recorded when the portable direct current meter connected between the wire leads registers zero ohm resistance.

[a] RHO-RE-SR-14, 1984, *Waste Status Summary October 1984*, Rockwell Hanford Operations, Richland, Washington.

[b] Clark, W. C., 2012, "Contract Number DE AC27 08RV1480 – Washington River Protection Solutions, LLC Tank 241-AY-102 Primary Tank Leak Integrity Change from Sound to Assumed Leaker, and Double-Shell Waste Tank Leak Integrity Definitions," (Letter WRPS-1204634 to T. W. Fletcher, U.S. Department of Energy, Office of River Protection, November 13), Washington River Protection Solutions, LLC, Richland, Washington.

[c] Ecology, EPA, and DOE, 1989, *Hanford Federal Facility Agreement and Consent Order – Tri-Party Agreement (TPA)*, as amended, Washington State Department of Ecology, U.S. Environmental Protection Agency, and U.S. Department of Energy, Olympia, Washington.

[d] WAC 173-303-610, "Dangerous Waste Regulations," Section 610, "Closure and Post-Closure," *Washington Administrative Code*, as amended, Washington State Department of Ecology, Olympia, Washington.

[e] SD-WM-SAR-006, 1986, *Single-Shell Tank Isolation Safety Analysis Report*, Rev. 2, Rockwell Hanford Operations, Richland, Washington.

[f] TEFZEL is a trademark of E. I. du Pont de Nemours & Company, Wilmington, Delaware.

[g] OSD-T-151-00031, 2014, *Operating Specifications for Tank Farm Leak Detection and Single-Shell Tank Intrusion Detection*, Rev. 6, Washington River Protection Solutions, LLC, Richland, Washington.

CAM = continuous air monitor.
DIL = drainable interstitial liquid.
DST = double-shell tank.
LOW = liquid observation well.
SST = single-shell tank.
TMACS = tank monitor and control system.
WAC = Washington Administrative Code.

DISTRIBUTION LIST

OFFSITE – USA

Number of copies	Address
2 hard copies	**Congress of the United States** U.S. Senate 717 Hart Senate Building Washington D.C. 20510 Senator Ron Wyden U.S. House of Representatives 1641 Longworth House Office Building Washington D. C. 20515 Congressman Dan Newhouse, 4th District
	U.S. Department of Energy-Headquarters
1 electronic only	Elizabeth Connell Elizabeth.Connell@hq.doe.gov
1 electronic only	Nicholas P. Machara nicholas.machara@em.doe.gov
1 electronic only	Jeff Griffen jeffrey.griffen@em.doe.gov
1 electronic only	Confederated Tribes of the Umatilla Indian Reservation Armand Minthorn armandminthorn@ctuir.org
	Washington State Department of Health
1 hard copy	Office of Radiation Protection 309 Bradley Boulevard, Suite 201 Richland, WA, 99352
	Oregon Department of Energy
1 hard copy	Nuclear Safety Division 550 Capital St. N.E., 1st Floor Salem, OR 97301-3737 Ken Niles.
1 electronic only	**U.S. Defense Nuclear Facilities Safety Board** Mark Bradisse MarkB@dnfsb.gov

TRI-CITIES

Number of copies	Address
	Meier Architecture Engineering
1 electronic copy	Anthony G. Cockbain agcockbain@meierinc.com
	Tri-City Herald
1 hard copy	Annette Cary 333 West Canal Dr. Kennewick, WA 99336
1 hard copy	Robert J. Cash 114 Somerset St. Richland, WA 99354-1966
1 hard copy	Richard Welty 409 S. 41st Ave W. Richland, WA 99353-5005

ONSITE

Number of copies	Address	Mail Stop
	Government Accountability Office	
1 electronic only	N. K. Kintner-Meyer	A1-80
1 electronic only	J. T. Larson	A1-80
	U.S. Defense Nuclear Facilities Safety Board	
1 electronic only	P. K. Fox	S7-04
	U.S. Environmental Protection Agency	
1 hard copy	D. R. Einan	A3-46
	U.S. Department of Energy	
1 electronic only	M. E. Burandt	H6-60
1 electronic only	P. K. Call	H6-60
1 electronic only	L. M. Caulfield	H6-60
1 electronic only	J. E. Cheadle	H6-60
1 electronic only	R. L. Evans	H6-60
1 electronic only	T. W. Fletcher	H6-60
1 electronic only	R. L. Frink	H6-60
1 electronic only	J. F. Grindstaff	H6-60
1 hard copy	R. G. Hastings	H6-60
1 electronic only	B. A. Harkins	H6-60
1 electronic only	B. J. Harp	H6-60
1 electronic only	P. R. Hernandez	H6-60
1 electronic only	D. H. Irby	H6-60
1 electronic only	J. M. Johnson	H6-60
1 electronic only	C. J. Kemp	H6-60
1 electronic only	K. K. Kidder	H6-60
1 electronic only	Y. M. Levardi	H6-60
1 electronic only	C. A. Mathews	H6-60
1 electronic only	D. L. Noyes	H6-60
1 electronic only	C. R. Pacheco	H6-60
1 electronic only	S. H. Pfaff	H6-60

Number of copies	Address	Mail Stop
1 electronic only	B. J. Stickney	H6-60
1 electronic only	W. B. Scott	H6-60
1 electronic only	D. M. Smith	H6-60
1 electronic only	D. M. Stewart	H6-60
1 hard copy	G. D. Trenchard	H6-60
1 electronic only	R. J. Valle	H6-60
1 electronic only	B. T. Vance	H6-60
1 hard copy	Reading Room (P.H. McCormick)	H2-53
	Office of the Inspector General	
1 electronic only	L. A. Hughes	B8-27
1 electronic only	A. S. Nielsen	B8-27
1 electronic only	K. E. Otero	B8-28
1 electronic only	J. M. Pesek	B8-27
1 electronic only	L. J. Poppe	B8-27
1 electronic only	R. L. Stout	B8-27
1 electronic only	D. M. Thomas	B8-27

Washington River Protection Solutions, LLC

Number of copies	Address	Mail Stop
1 electronic only	K. R. Bader	H4-30
1 hard copy	D. G. Baide	H4-30
1 electronic only	H. L. Baune	H4-30
1 electronic only	K. R. Beaulaurier	S5-08
1 electronic only	J. J. Brown	S5-08
1 electronic only	R. D. Cantwell	R2-50
1 electronic only	J. L. Castleberry	S7-02
1 electronic only	T. M. Crane	T4-70
1 electronic only	M. S. Cuttlers	S5-08
1 electronic only	J. R. Dobson	S5-62
1 electronic only	J. Duarte	S5-08
1 electronic only	J. R. Eschenberg	H3-21
1 electronic only	B. K. Everett	S5-08
1 electronic only	T. L. Farber	H3-21
1 electronic only	K. D. Frisby	S5-63
1 electronic only	G. J. Gauck	R1-07
1 electronic only	J. E. Geary	S7-02
1 electronic only	R. E. Gregory	S7-68
1 electronic only	D. J. Haynie	S5-08
1 electronic only	C. L. Harrington	HO-55
1 electronic only	M. L. Hendrickson	H4-30
1 electronic only	J. N. Holloway	H3-22
1 electronic only	D. J. Houghton	R1-02
1 electronic only	J. A. Joyner	H1-51
1 electronic only	B. A. Johnson	S5-13
1 electronic only	N. W. Kirch	H4-30
1 electronic only	T. J. Knaff	S5-08
1 electronic only	M. T. Lutz	S5-08
1 electronic only	A. G. Miskho	H0-55
2 hard copies	R. J. Moore	S3-95
1 electronic only	R. R. Nelson	S5-08
1 electronic only	M. S. Ornstein	H6-60
1 electronic only	T. R. Pickles	R1-07
1 electronic only	A. H. Purvis	T4-70

Number of copies	Address	Mail Stop
1 electronic only	T. R. Reynolds	H1-60
1 electronic only	J. S. Rodriguez	S5-08
1 electronic only	R. T. Roxburgh	H3-22
1 electronic only	S. J. Saunders	H4-31
1 electronic only	K. H. Subramanian	H4-30
1 electronic only	R. L. Swallow	S5-23
1 electronic only	M. F. Tavelli	H4-30
1 elec. & 1 hard copy	A. M. Templeton	H4-30
1 electronic only	E. J. Van Mason	H1-51
1 electronic only	J. A. Voogd	R1-51
1 electronic only	K. J. Way	R1-06
1 electronic only	J. M. Wall	HO-55
1 electronic only	E. I. Yokuda	R1-07
1 hard copy	WFO Shift Office	S5-08
1 hard copy	Environmental Data Mgmt Center	H6-08

CH2M Hill Plateau Remediation Contractor

Number of copies	Address	Mail Stop
1 electronic only	G. S. Thomas	R3-50

Washington State Department of Ecology

Number of copies	Address	Mail Stop
1 electronic only	J. M. Alzheimer	H0-57
1 hard copy	S. S. Lowe	H0-57
1 hard copy	J. J. Lyon	H0-57
1 electronic only	M.W. Barnes	H0-57
1 hard copy	Library	H0-57

Pacific Northwest National Laboratory

Number of copies	Address	Mail Stop
1 electronic only	B. C. Simpson	K7-76
1 electronic only	A. M. Gorton	K7-76
1 electronic only	M. A. Pelton	K7-76