AR TARGET SHEET

The following document was too large to scan as one unit, therefore, it has been broken down into sections.

EDMC#:	0061511
SECTION:	3 OF 5
DOCUMENT #:	RPP-13774, Rev 002
TITLE:	SST System Closure Plan

Appendix 4A

Figures and Drawings

This page intentionally left blank.

1 **Figure 4A-1 WTP Simplified Flow Diagram**

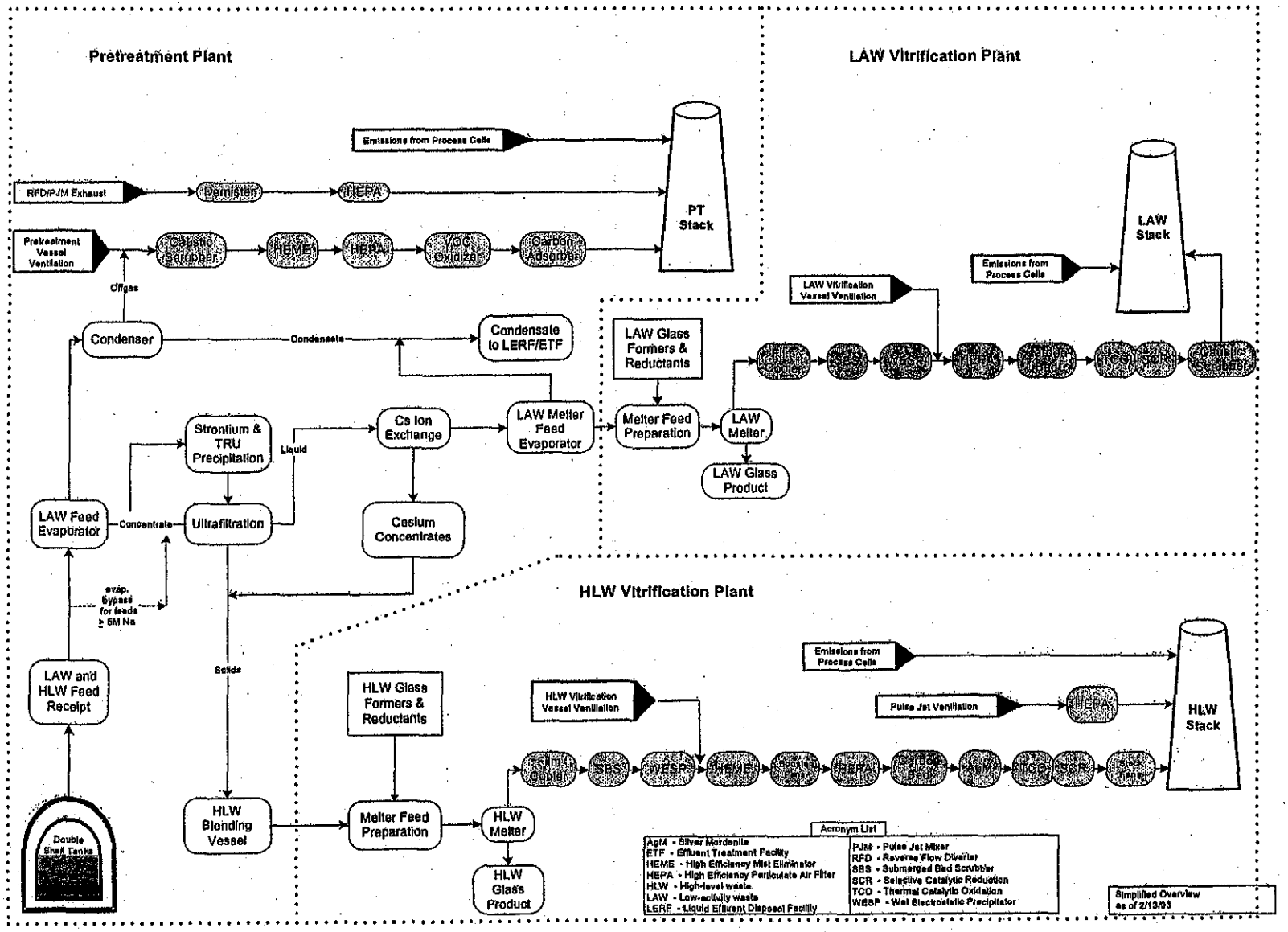

2

Figure 4A-2 Primary Pretreatment Process Systems

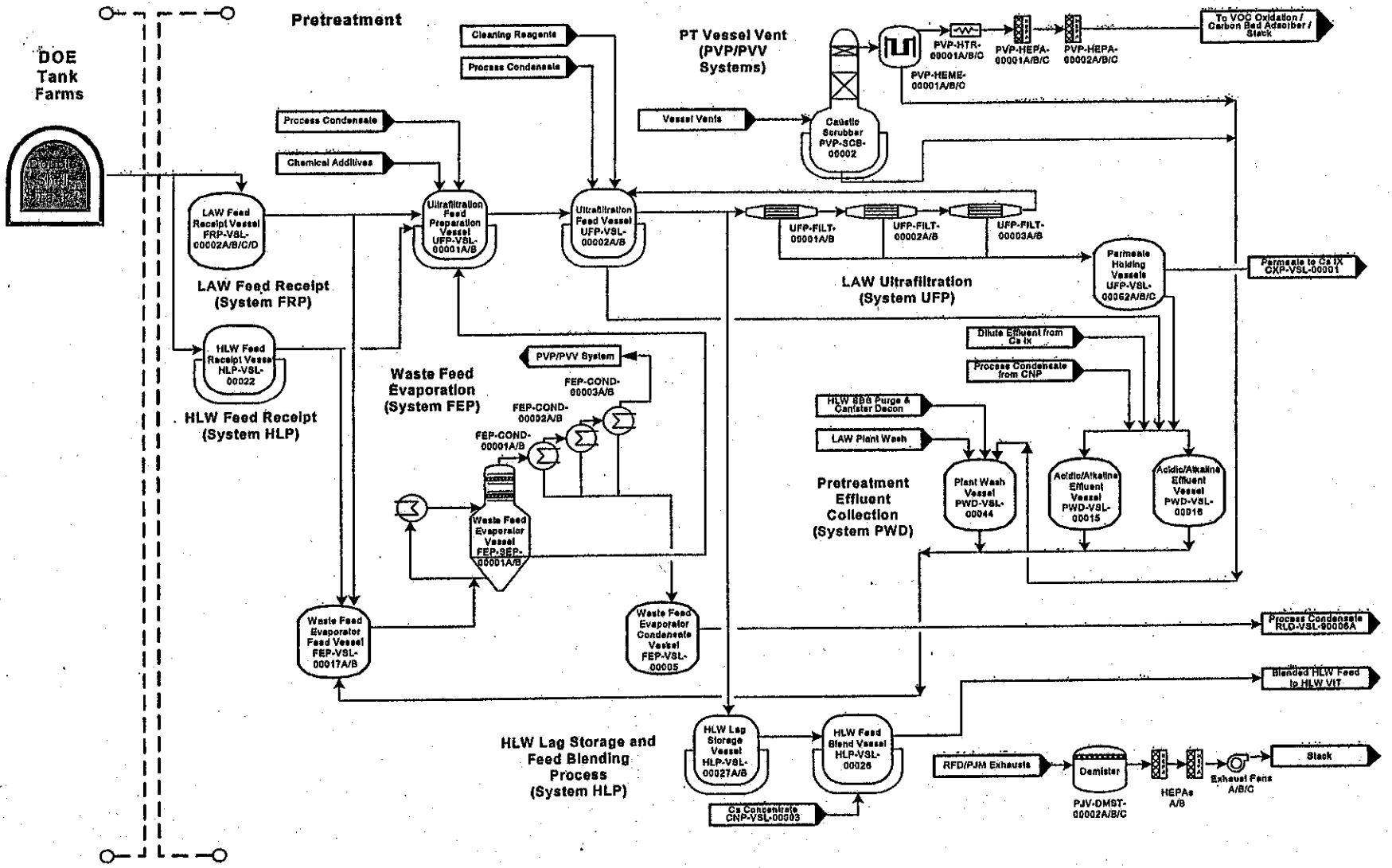

Figure 4A-02A **Primary Pretreatment Process Systems (Continued)**

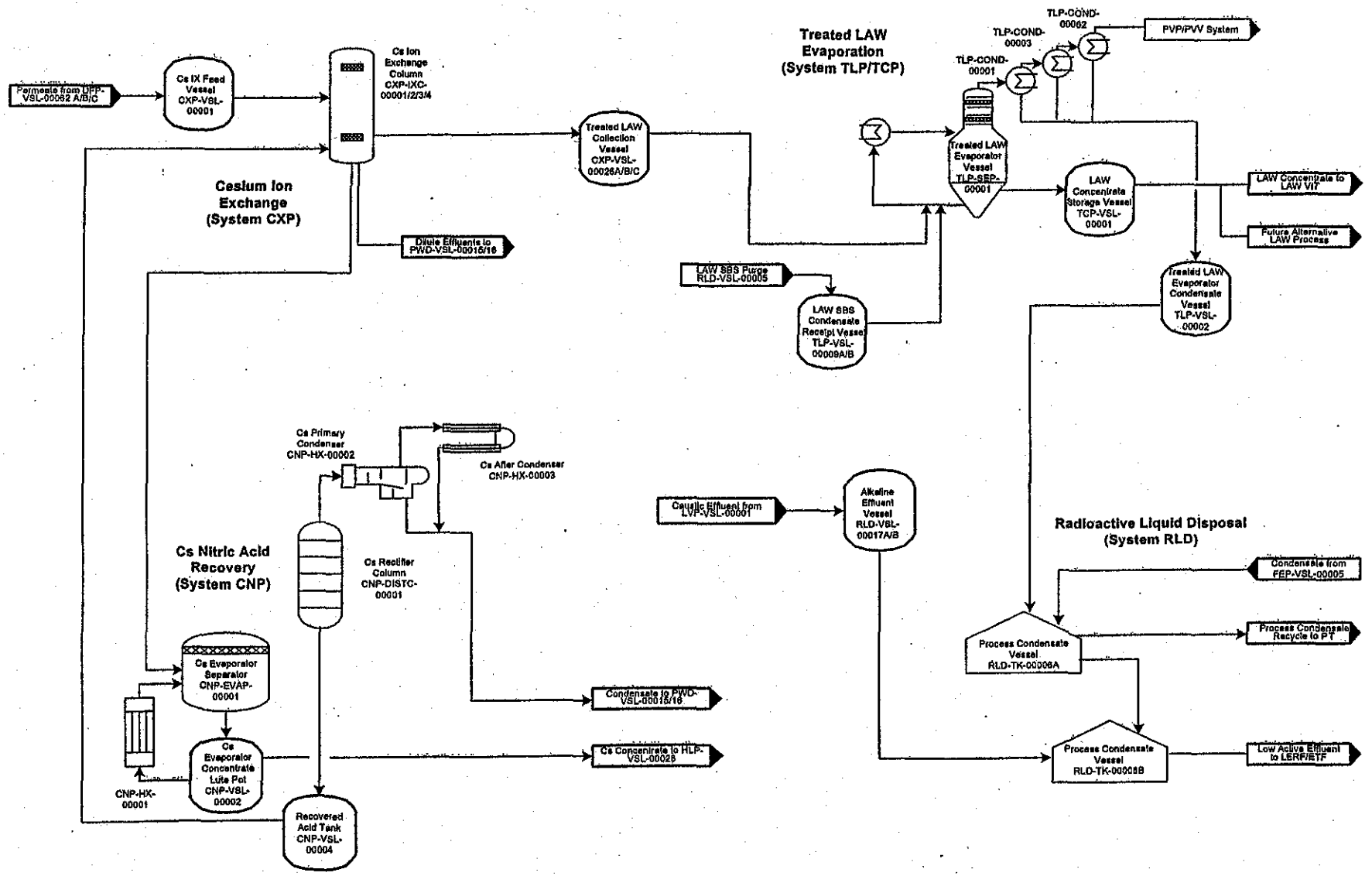

Figure 4A-3 Primary LAW Vitrification Systems

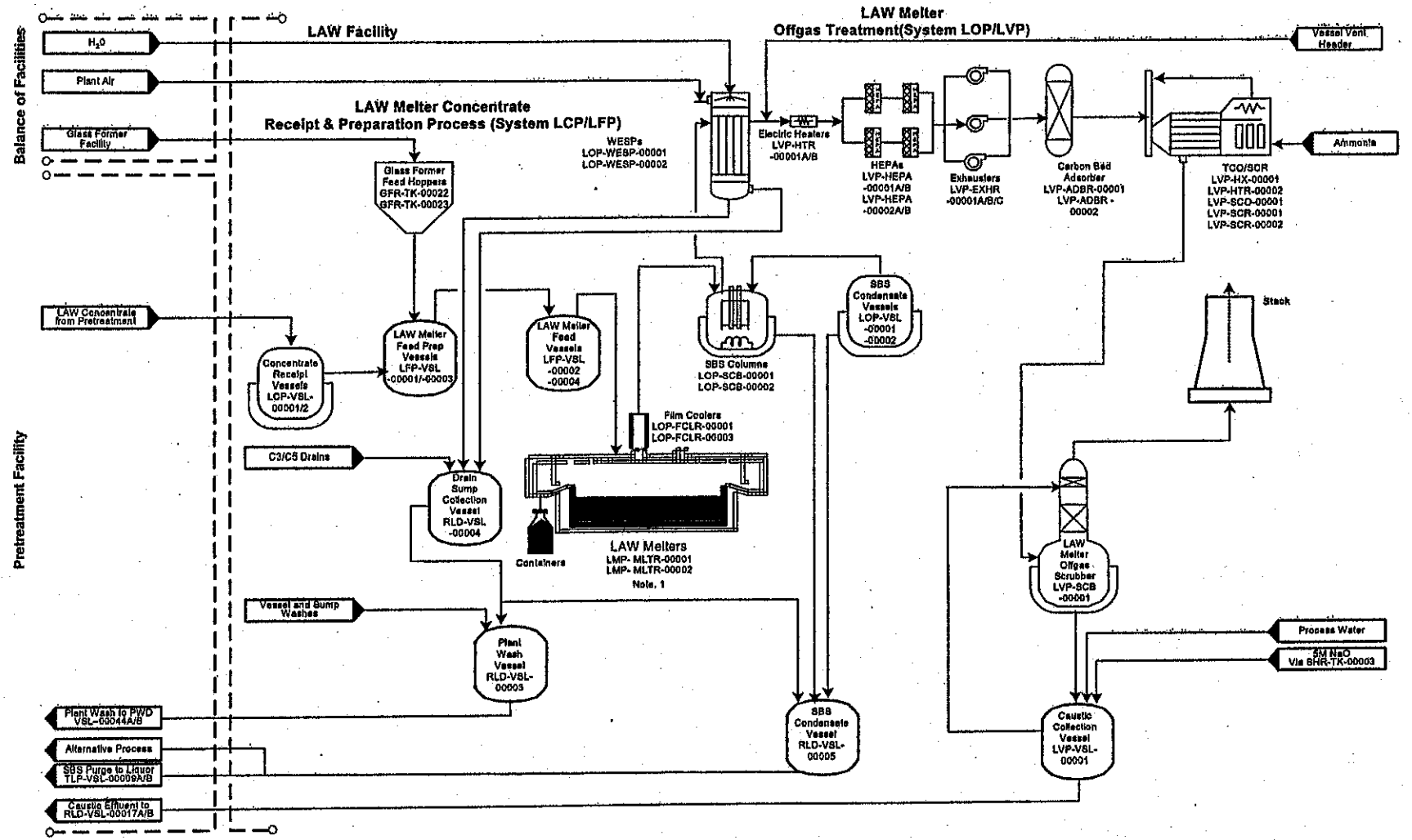

Notes:
1. For this diagram one melter system is shown but assumes a total of two LAW melter systems of identical capacity.

1 **Figure 4A-4 Primary HLW Vitrification Systems**

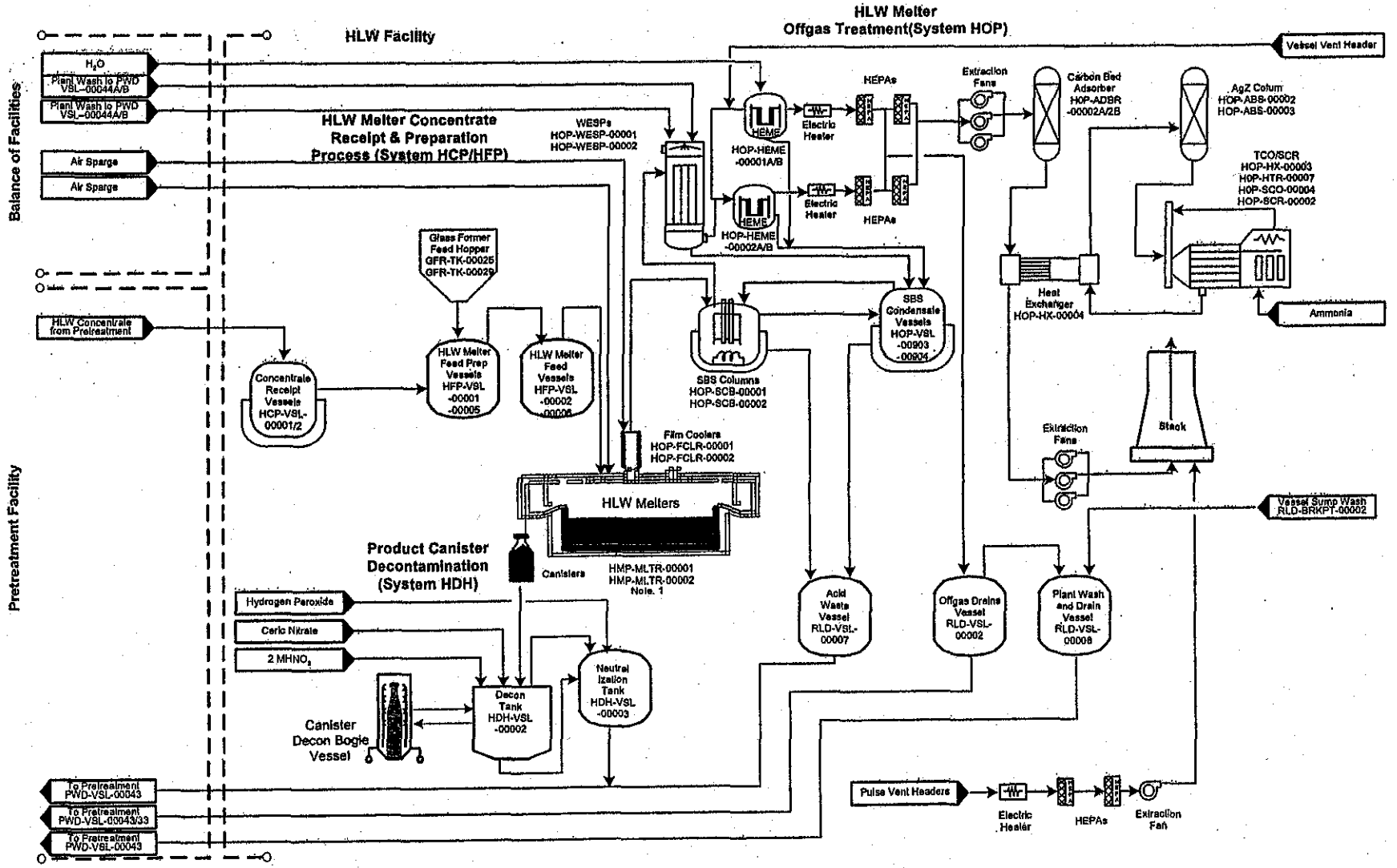

Notes:
1. For this diagram one melter system is shown
2 but assumes a total of two HLW melter systems of identical capacity.

Figure 4A-5 Waste Feed Receipt Process System (FRP)

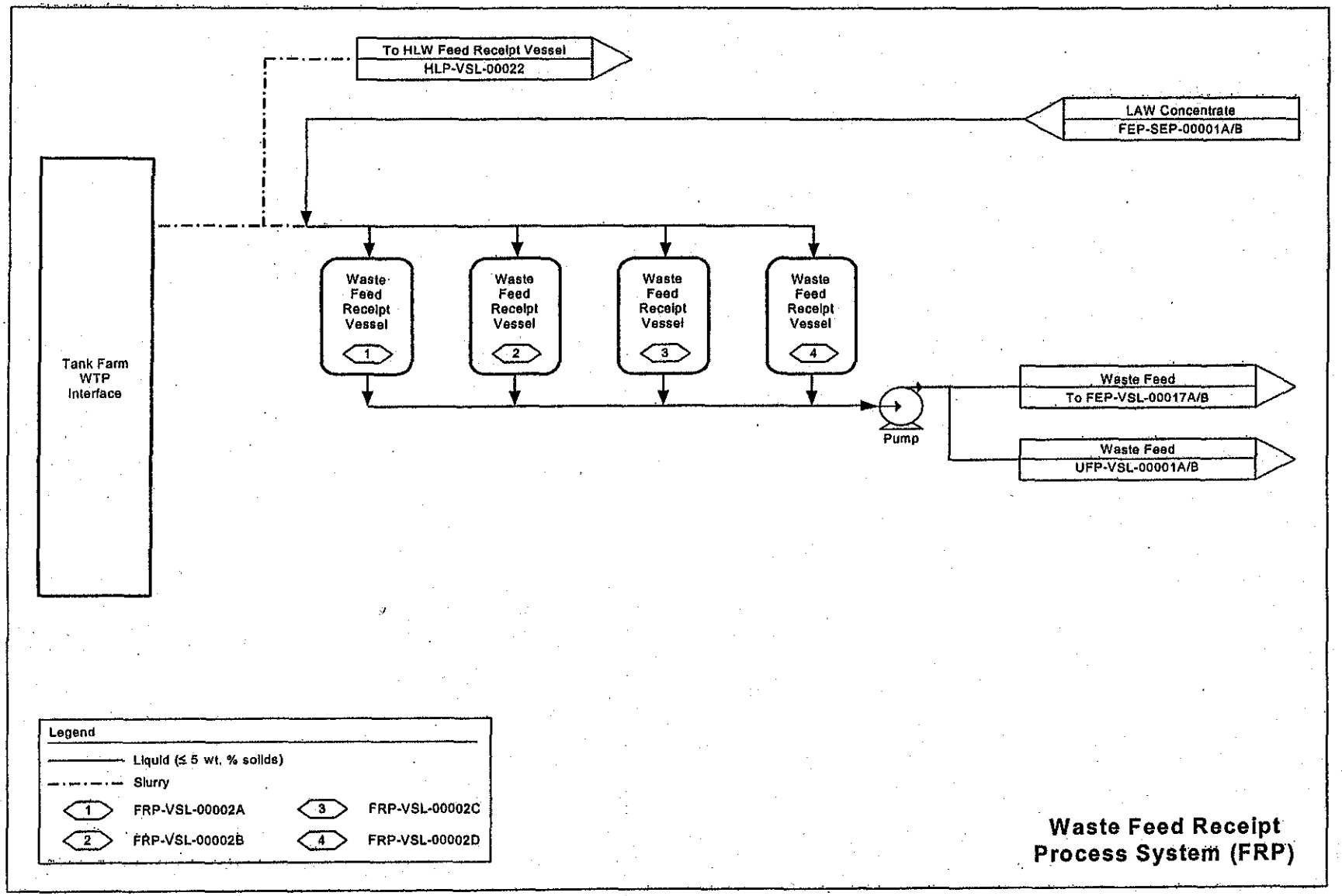

Figure 4A-6 Waste Feed Evaporation Process System (FEP)

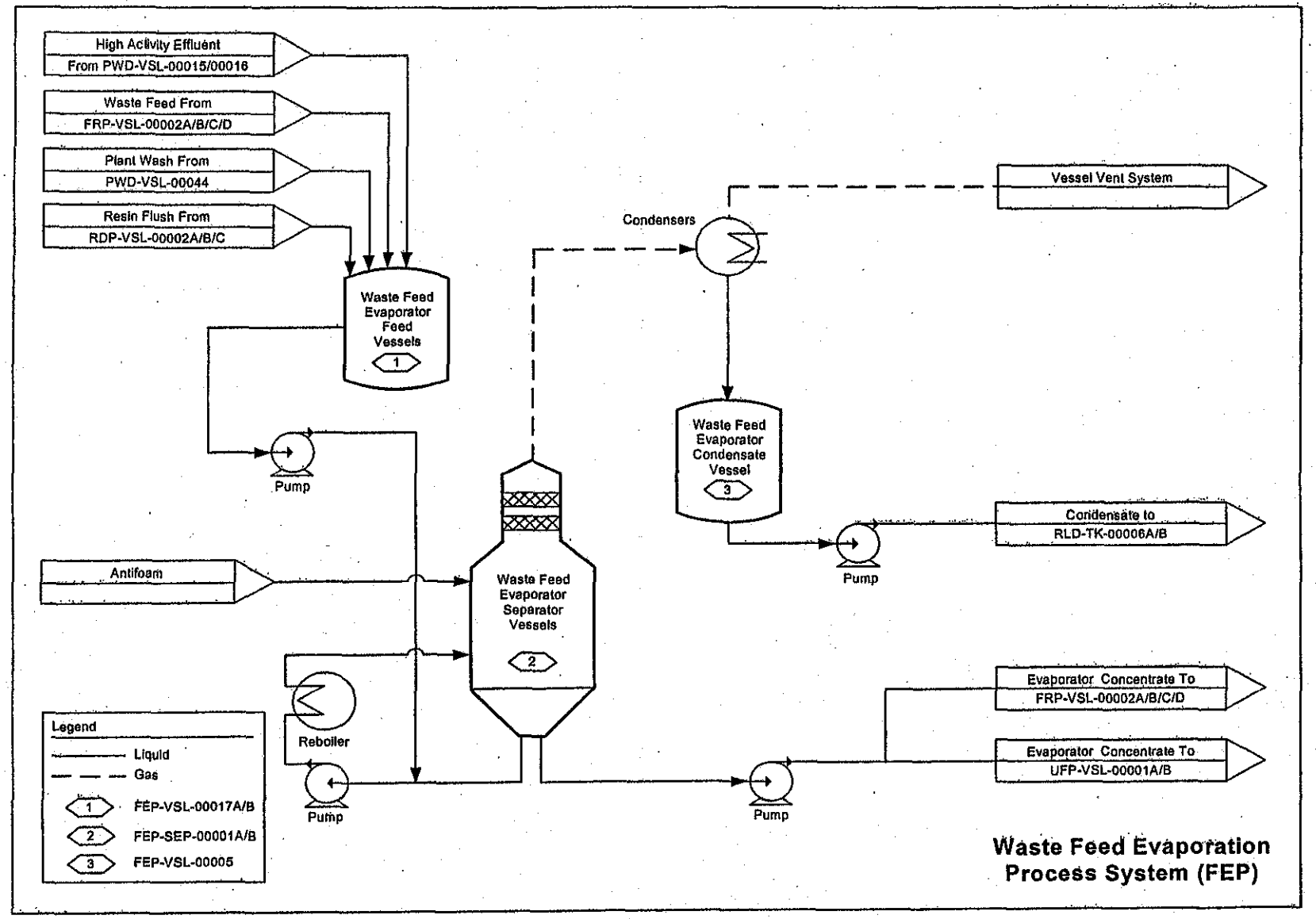

Figure 4A-7 Ultrafiltration Process System (UFP)

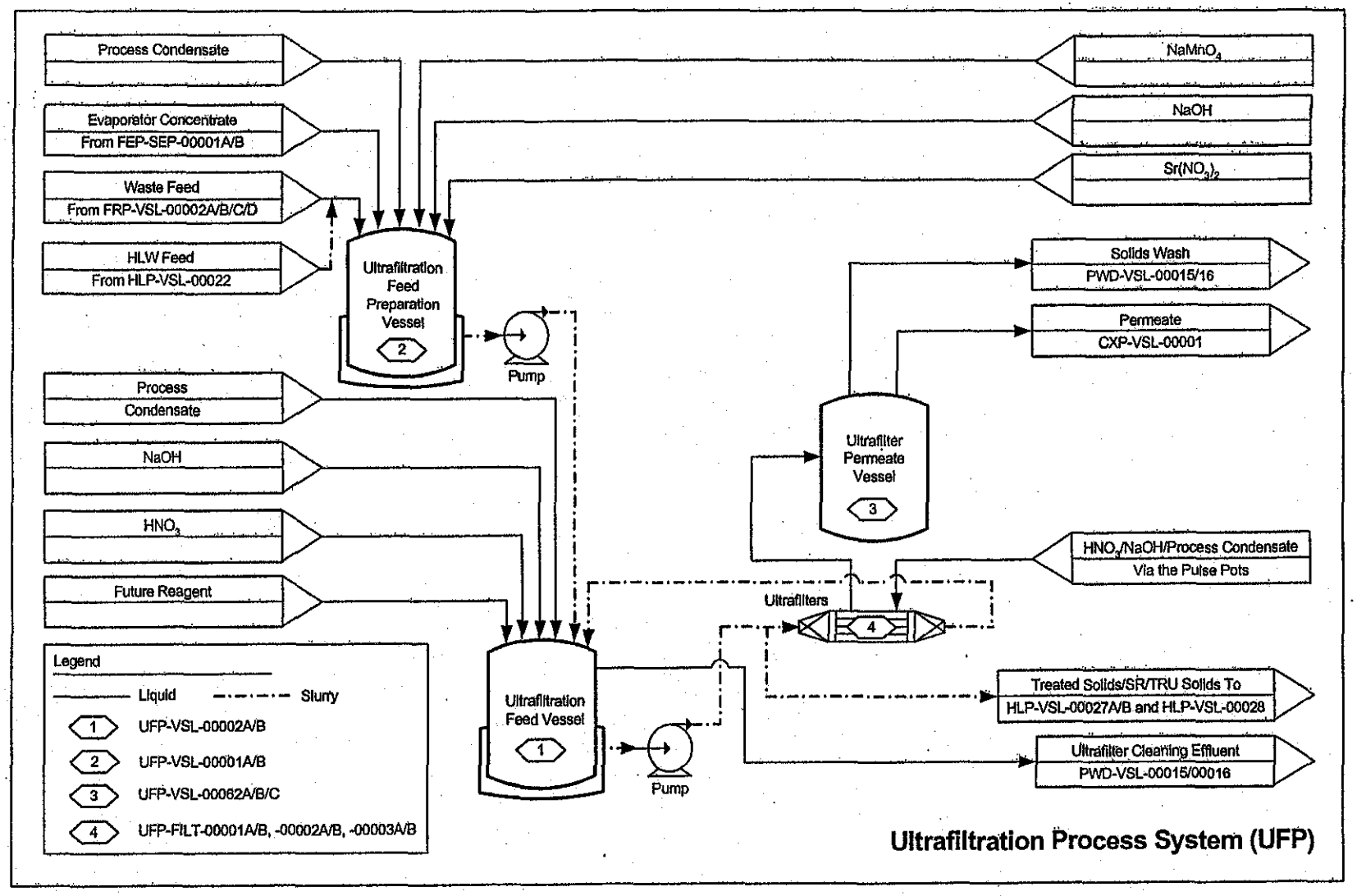

Figure 4A-8 HLW Lag Storage and Feed Blending Process System (HLP)

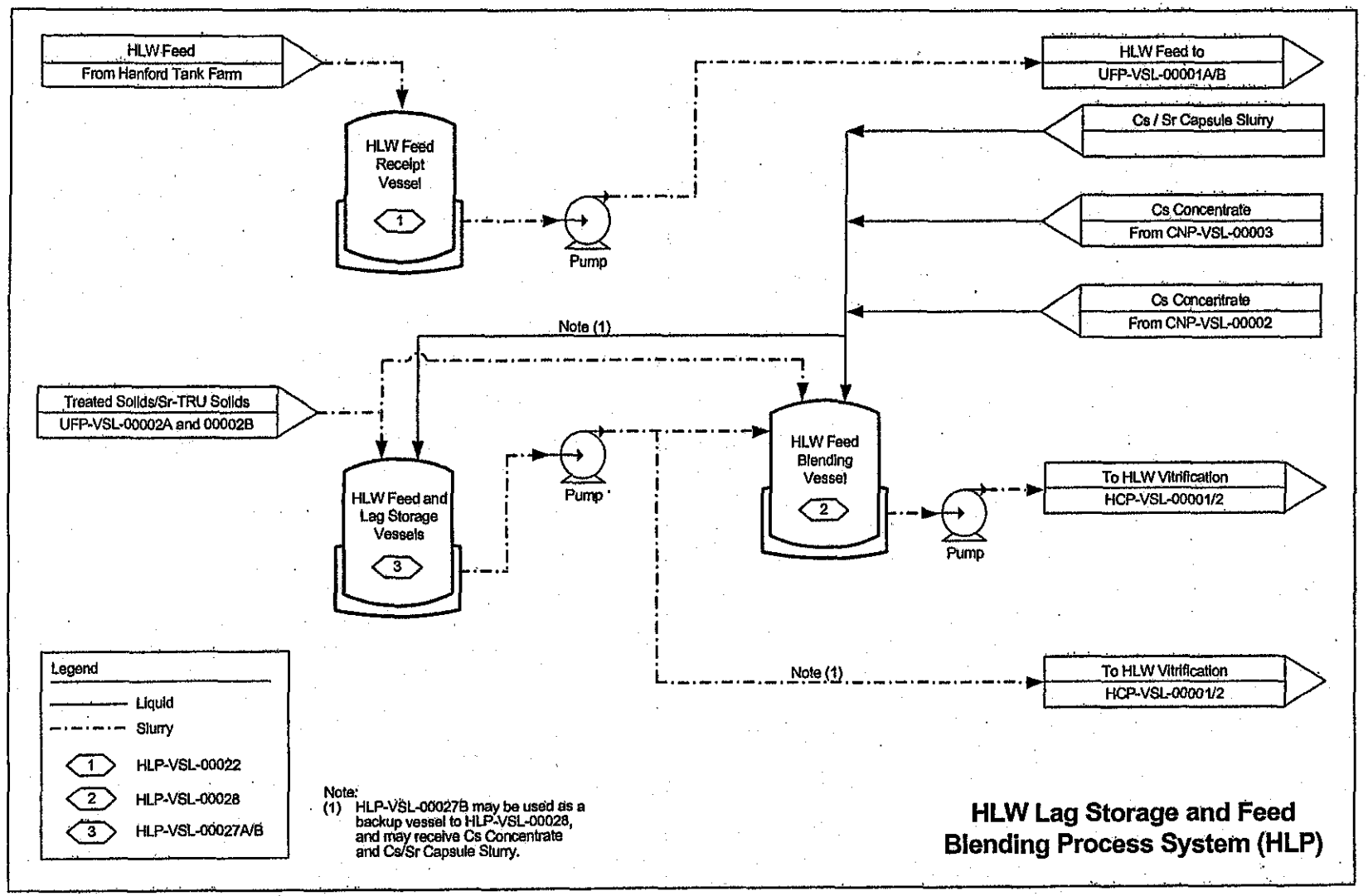

Figure 4A-9 Cesium Ion Exchange Process System (CXP)

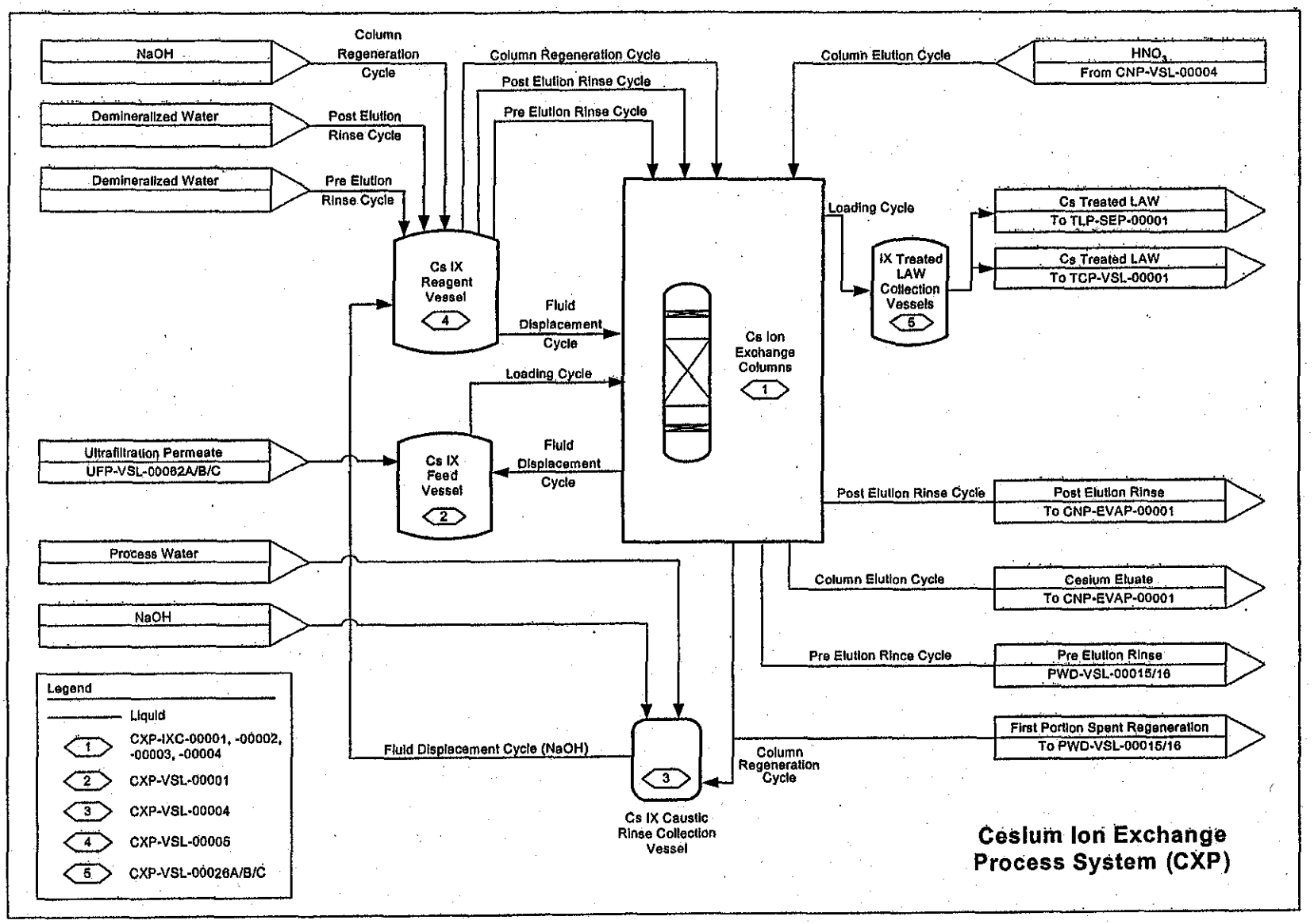

1 **Figure 4A-10 Cesium Nitric Acid Recovery Process System (CNP)**

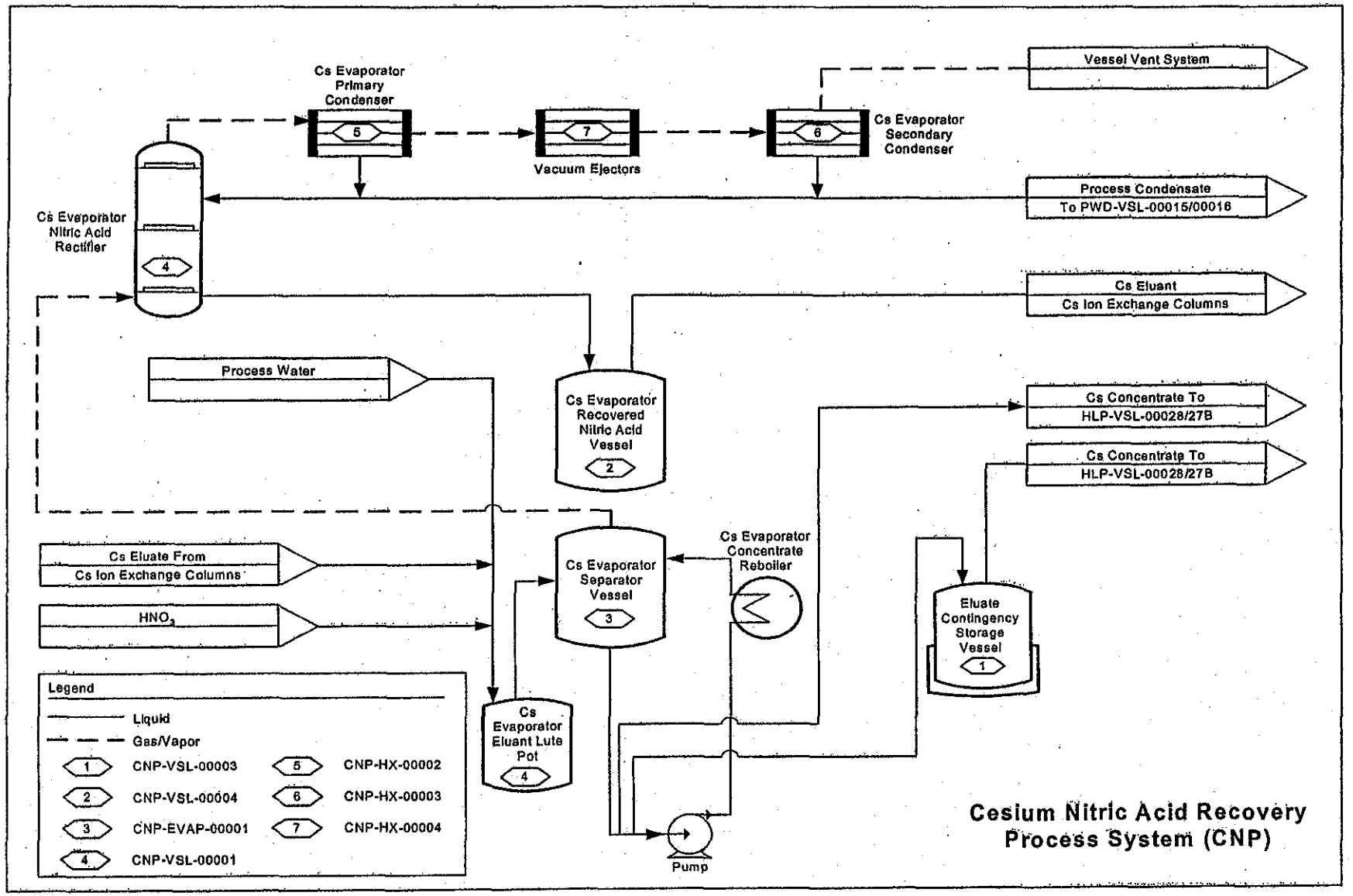

2

Figure 4A-11 Cesium Resin Addition Process System (CRP)

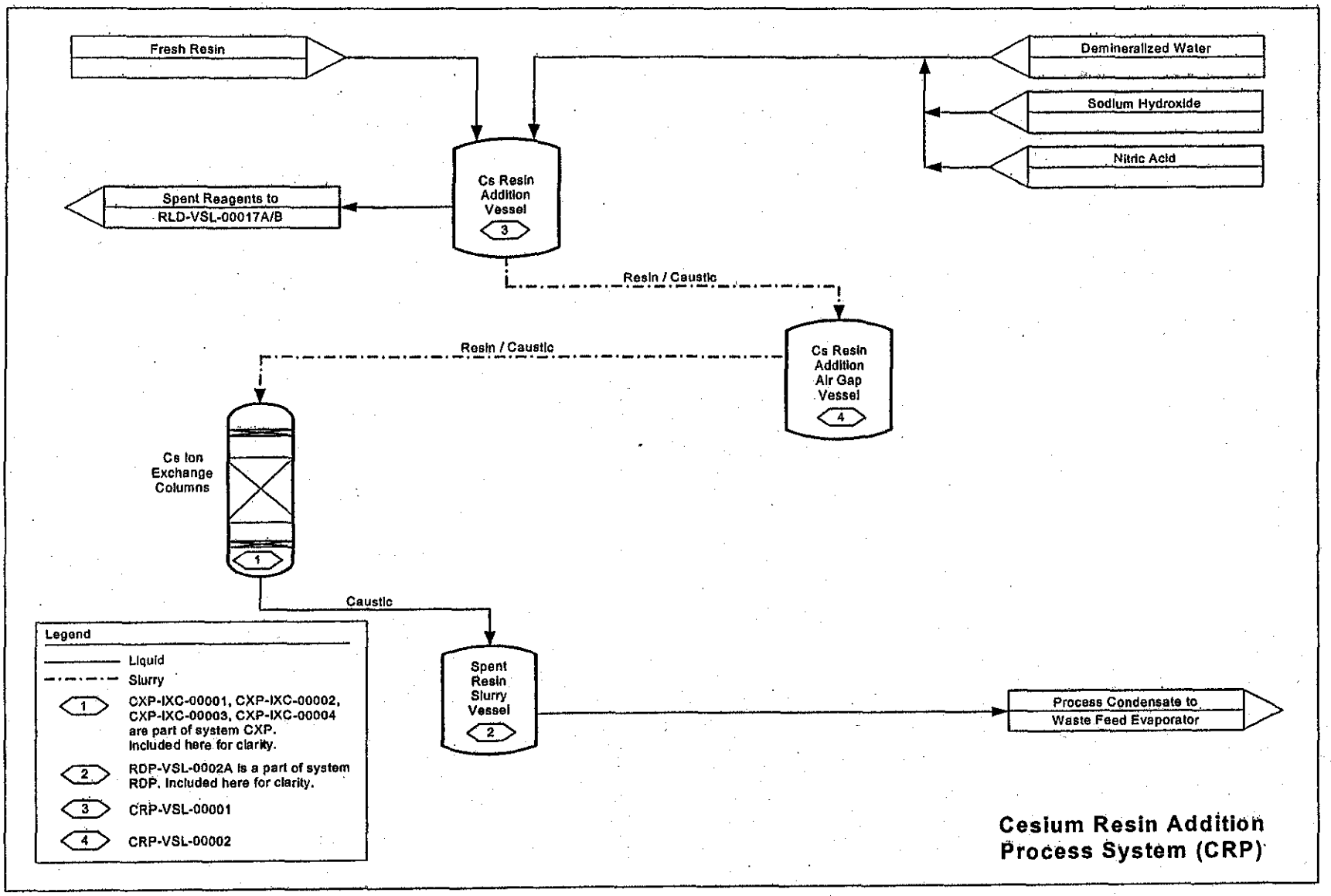

~~The following figures have been deleted:~~

~~Figure 4A-12 Technetium Ion Exchange Process System (TXP)~~

Figure 4A-12 Reserved

Figure 4A-13 ~~Technetium Eluant Recovery Process System (TEP)~~Reserved

Figure 4A-14 ~~Technetium Resin Addition Process System (TRP)~~Reserved

Figure 4A-15 Spent Resin and Dewatering Process System (RDP)

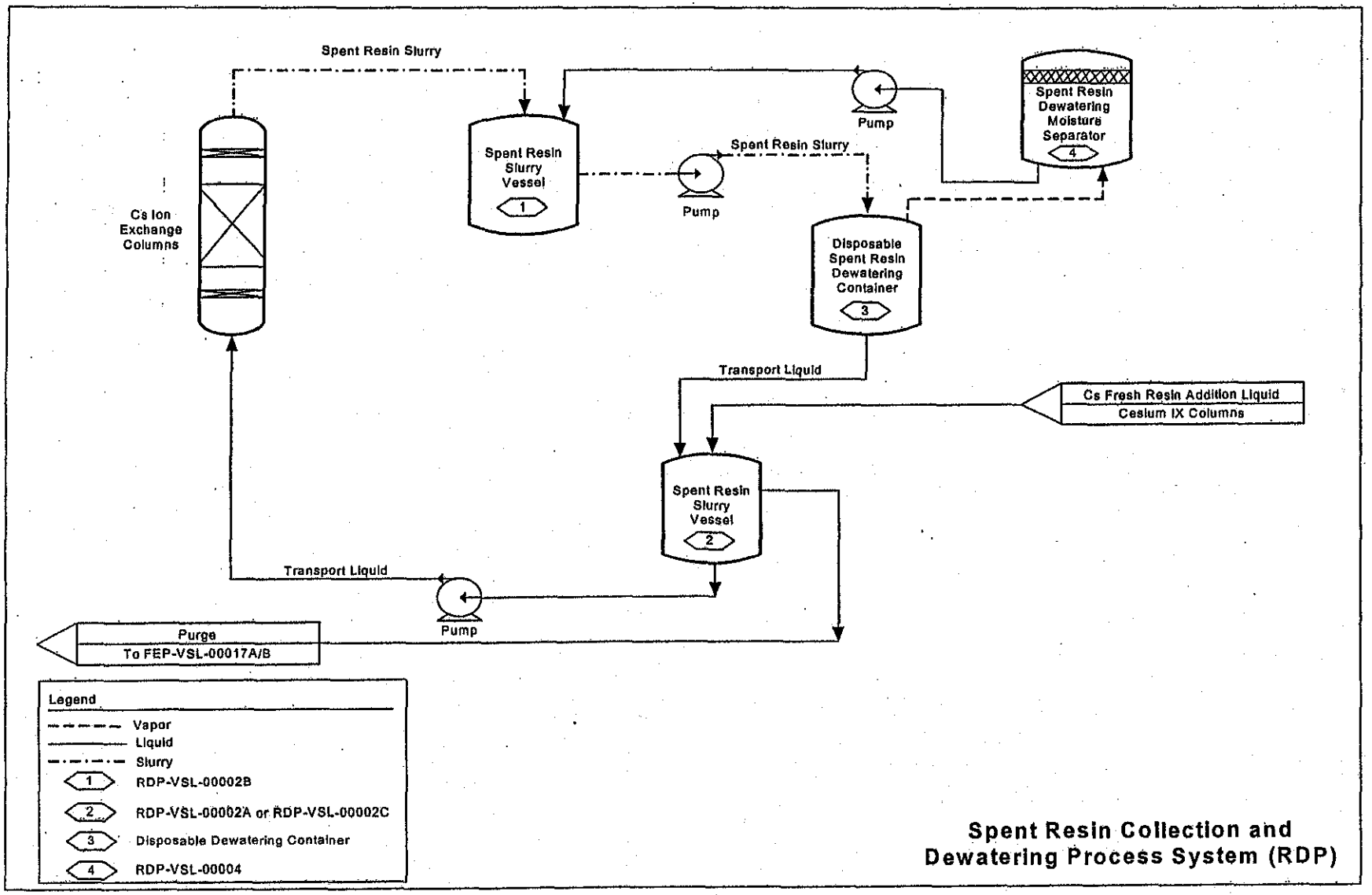

Figure 4A-16 Treated LAW Evaporation Process System (TLP) and Treated LAW Concentrate Storage Process System (TCP)

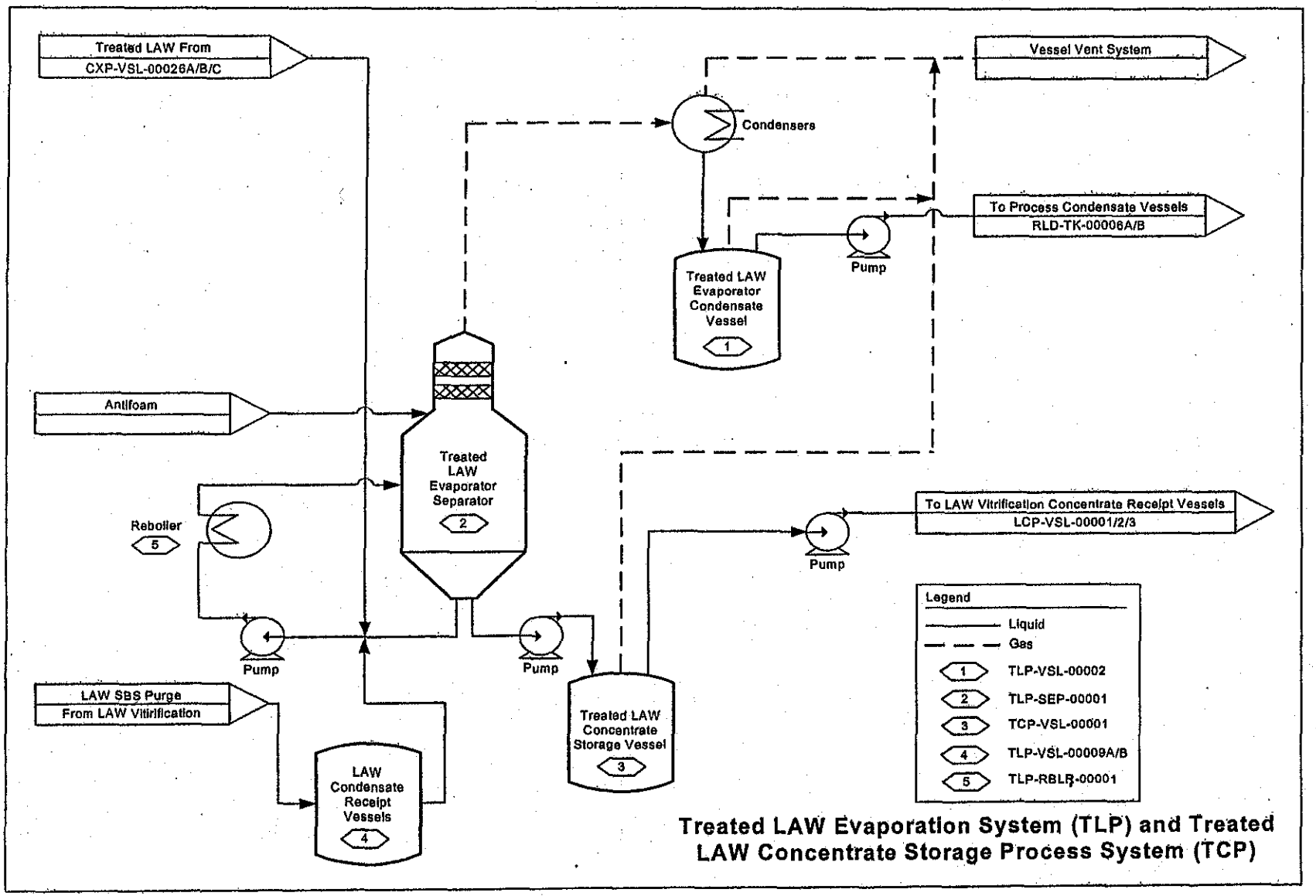

Figure 4A-17 Plant Wash and Disposal System Above Grade (PWD)

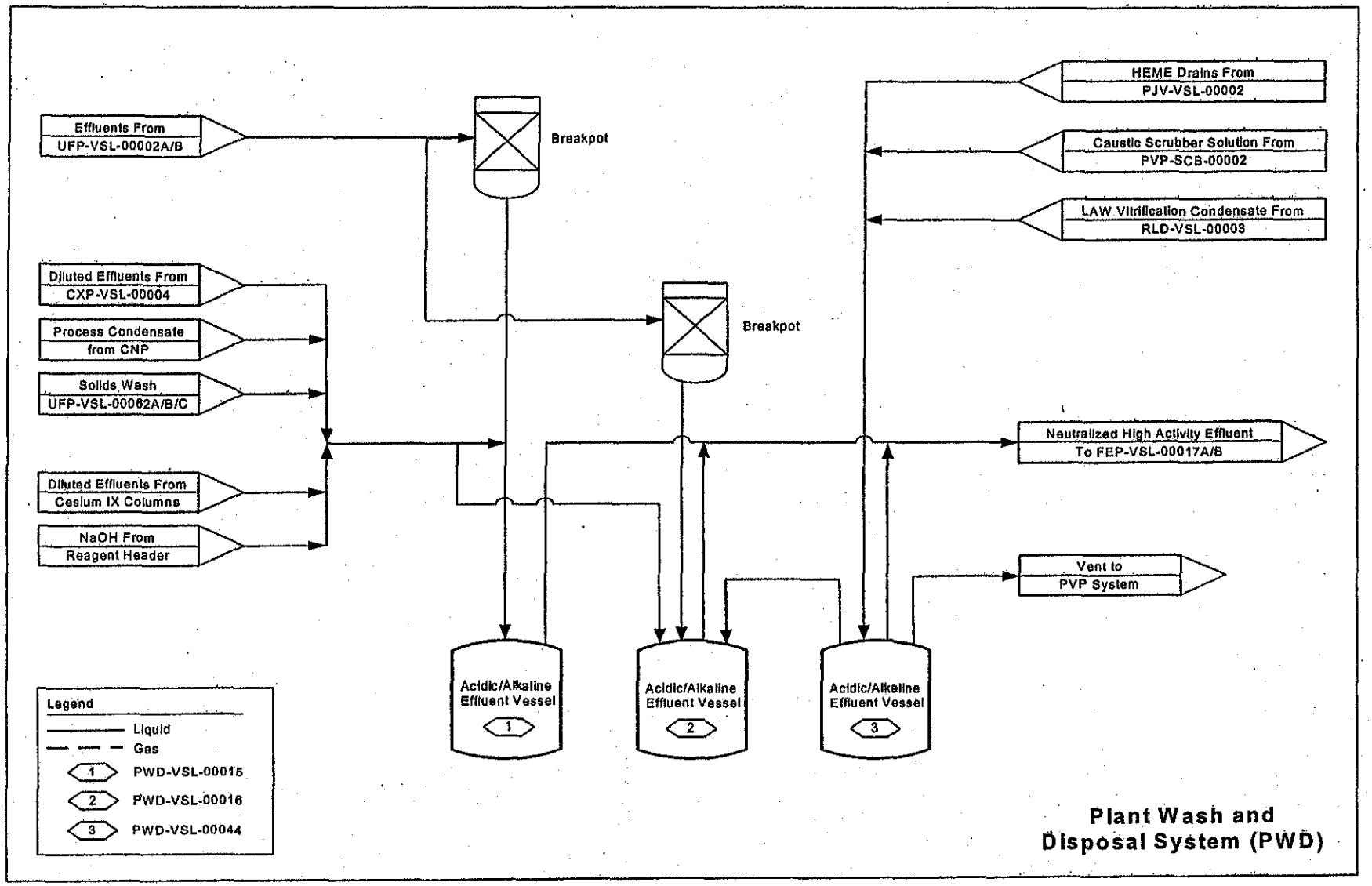

Figure 4A-18 Pretreatment Plant Radioactive Liquid Waste Disposal System (RLD) ~~and Non-Radioactive Liquid Waste Disposal System (NLD)~~

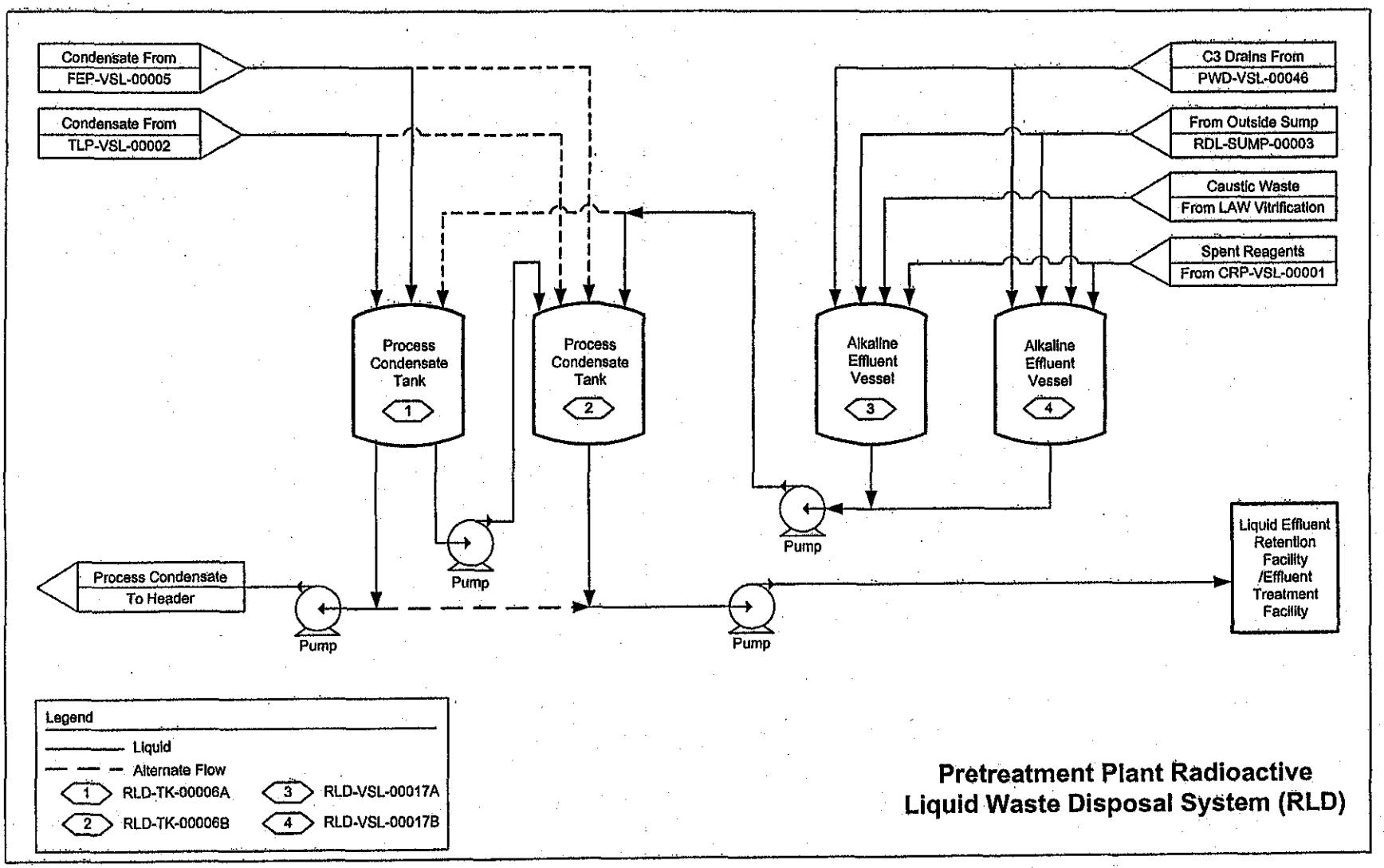

Figure 4A-19 Pretreatment Vessel Vent Process System (PVP) and Pretreatment Plant Vessel Vent Exhaust System (PVV)

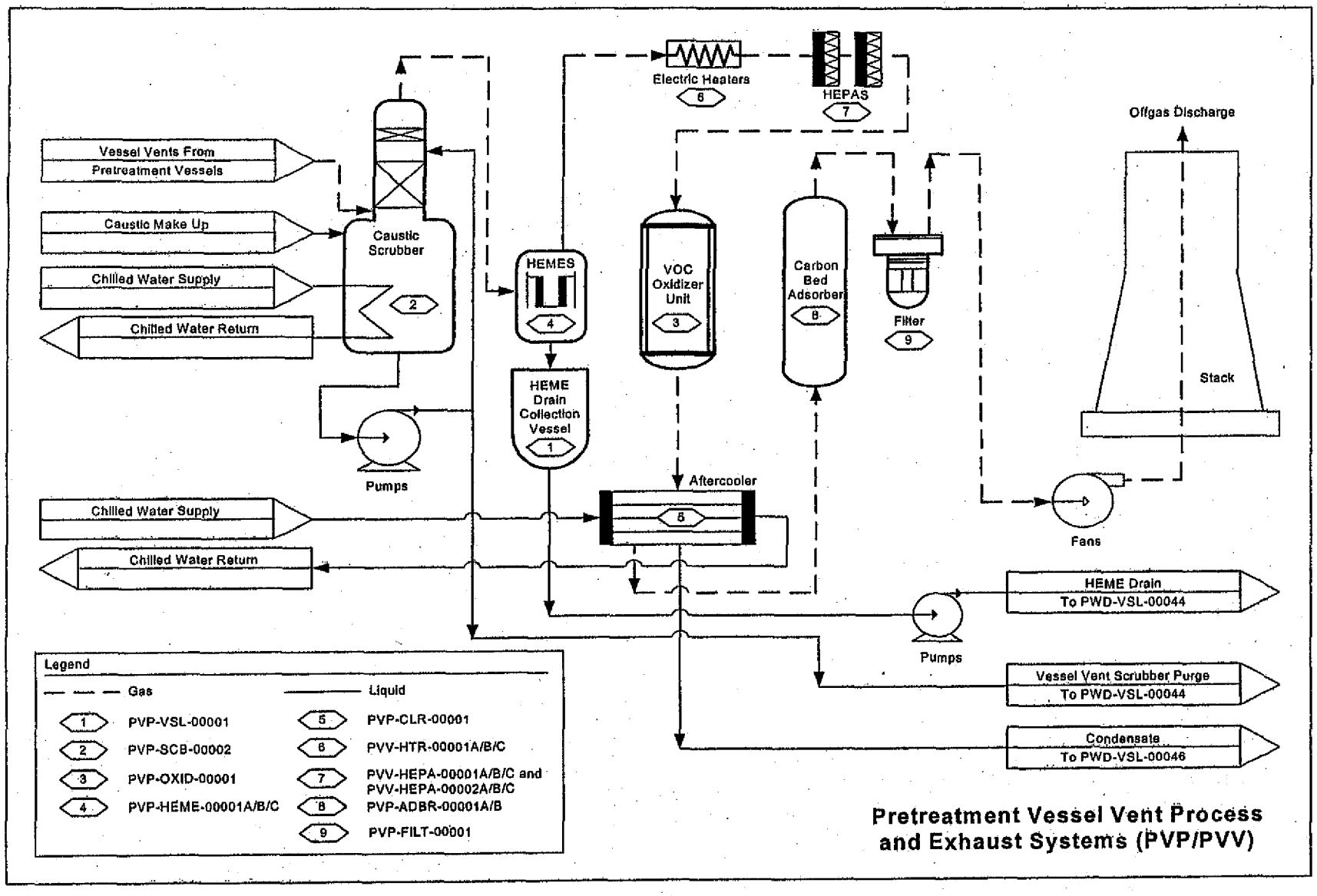

Figure 4A-20 LAW Concentrate Receipt Process System (LCP) and LAW Melter Feed Process System (LFP)

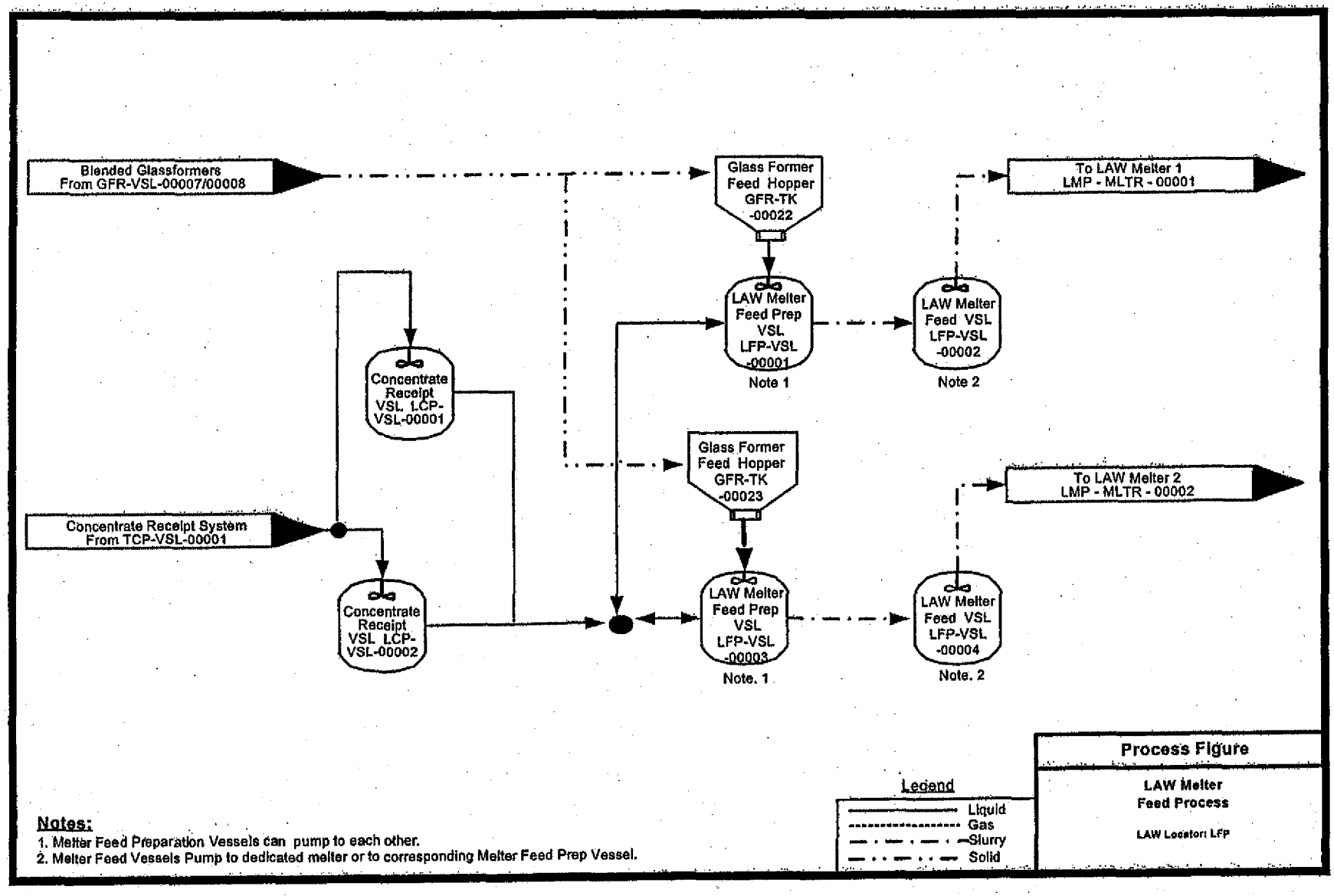

Figure 4A-21 LAW Melter Process System (LMP)

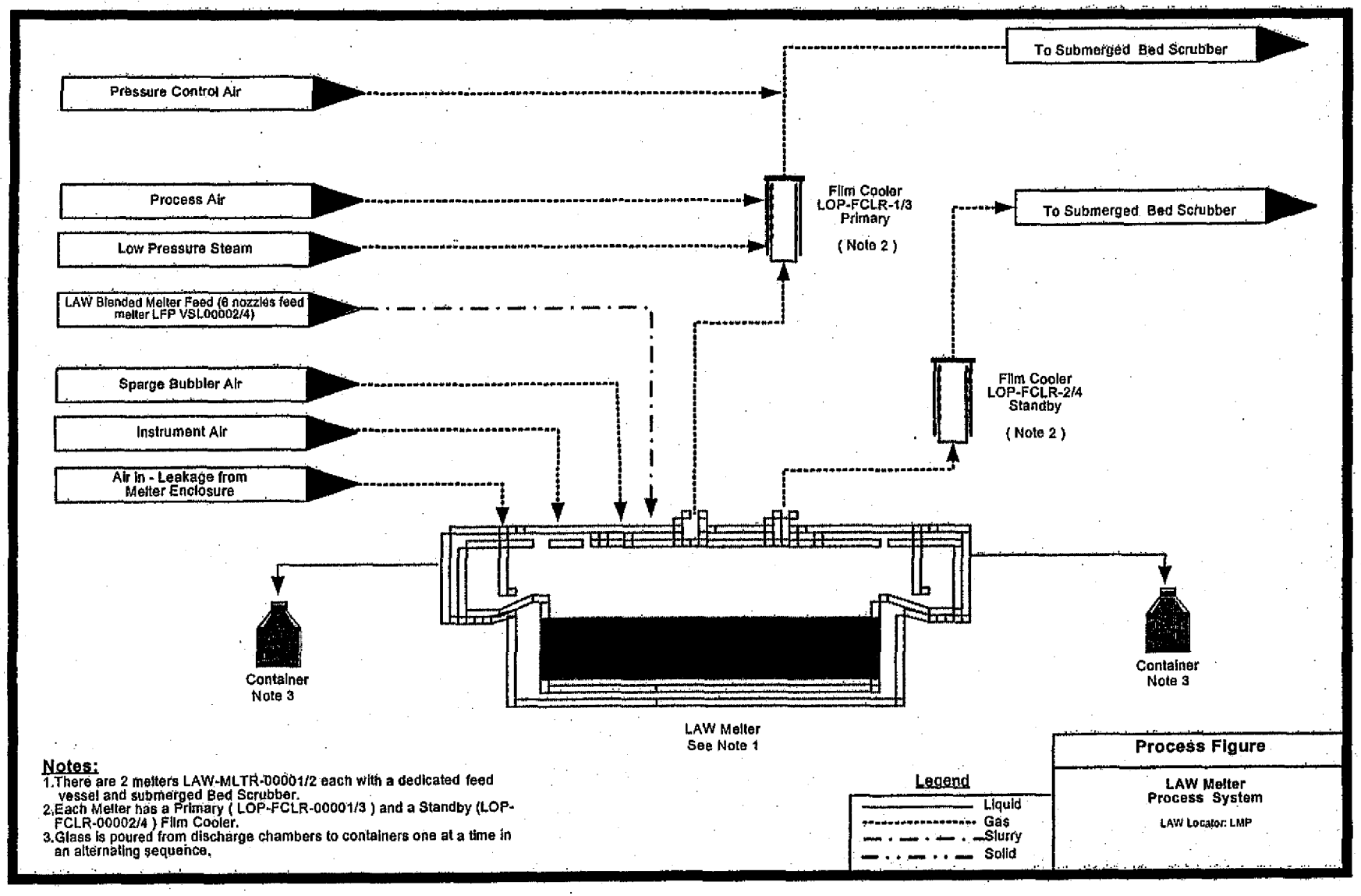

Figure 4A-22 LAW Primary Offgas Process System (LOP)

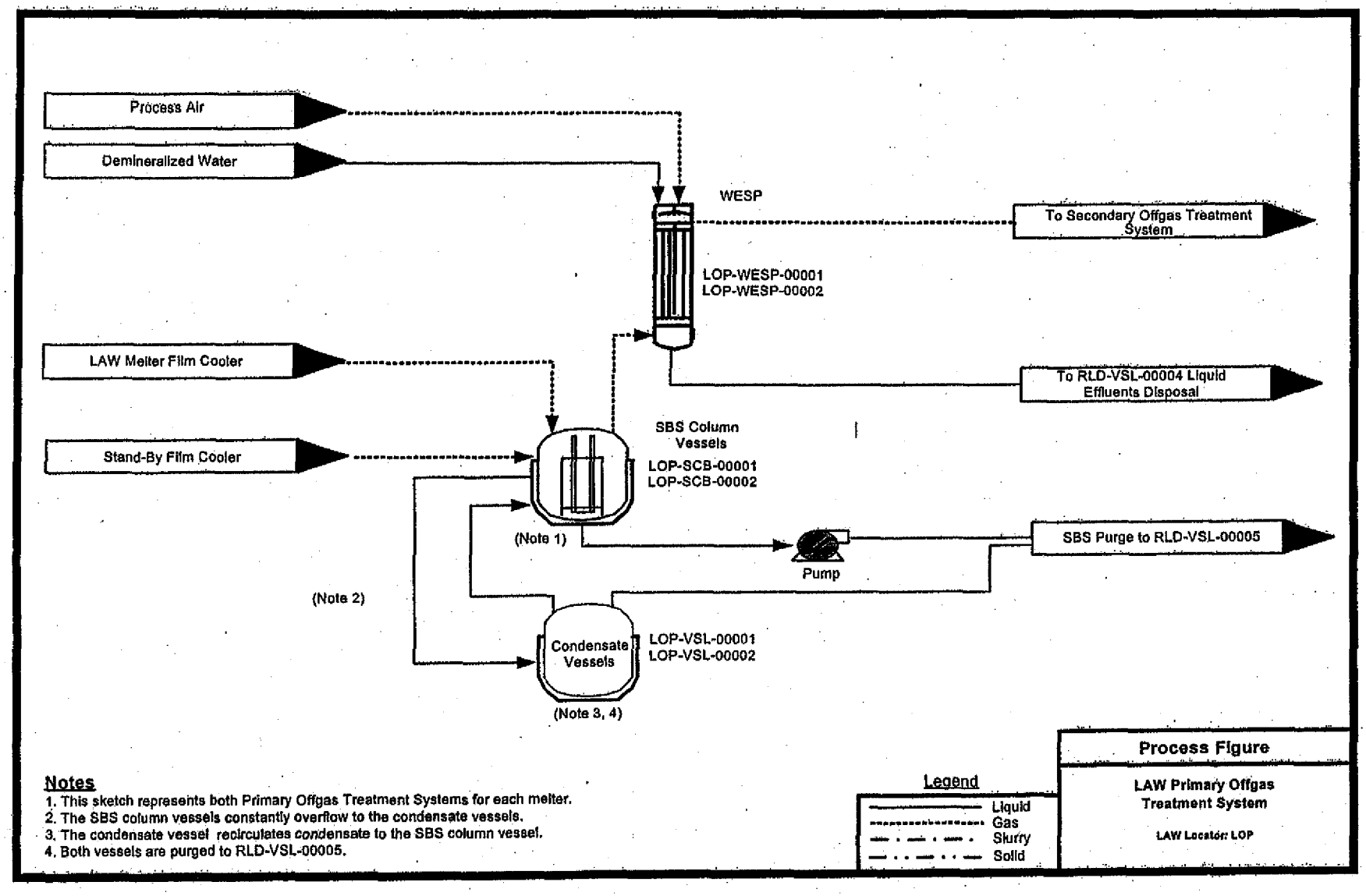

Figure 4A-23 LAW Secondary Offgas/Vessel Vent Process System (LVP)

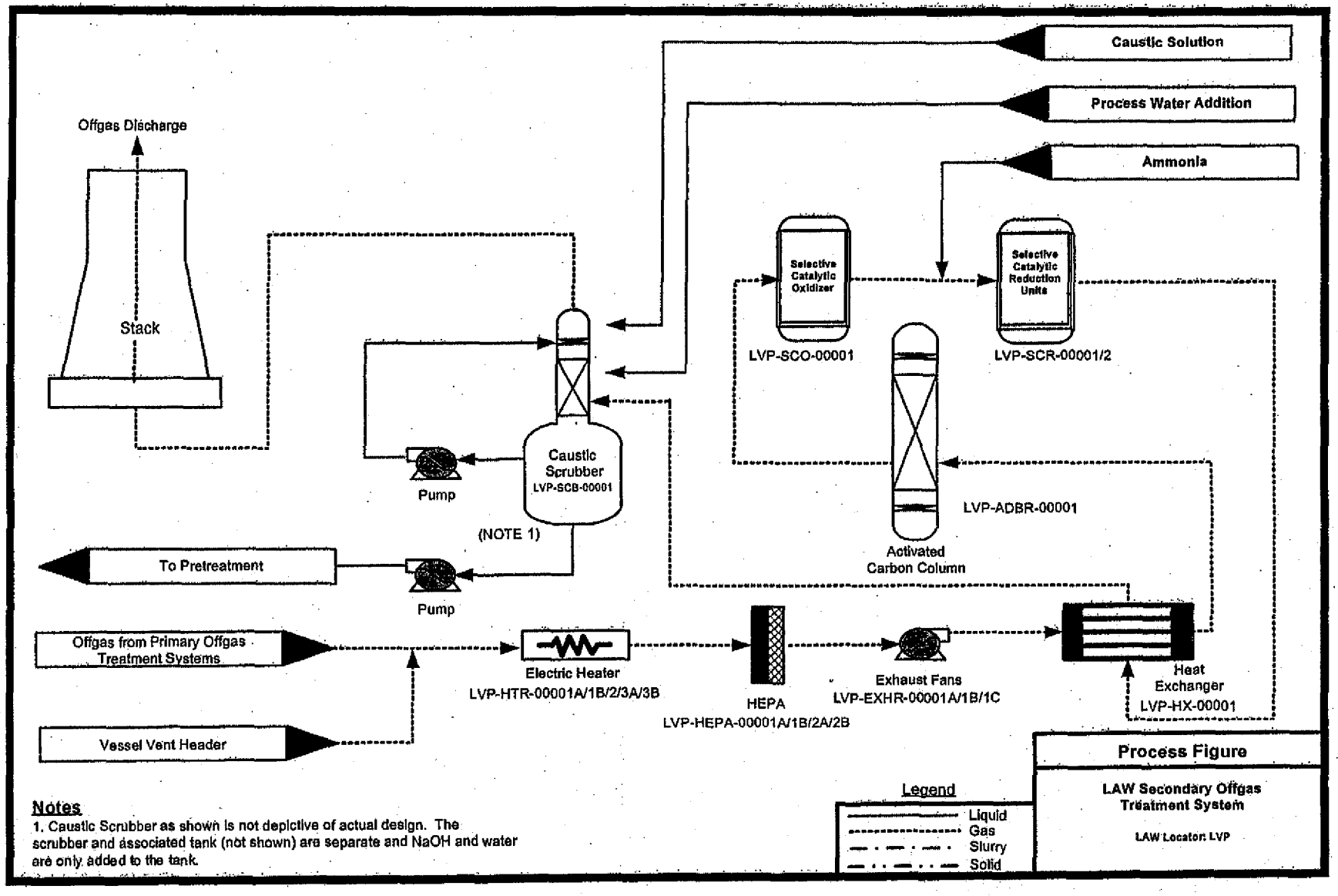

Figure 4A-24 LAW Container Finishing Handling System (LFH)

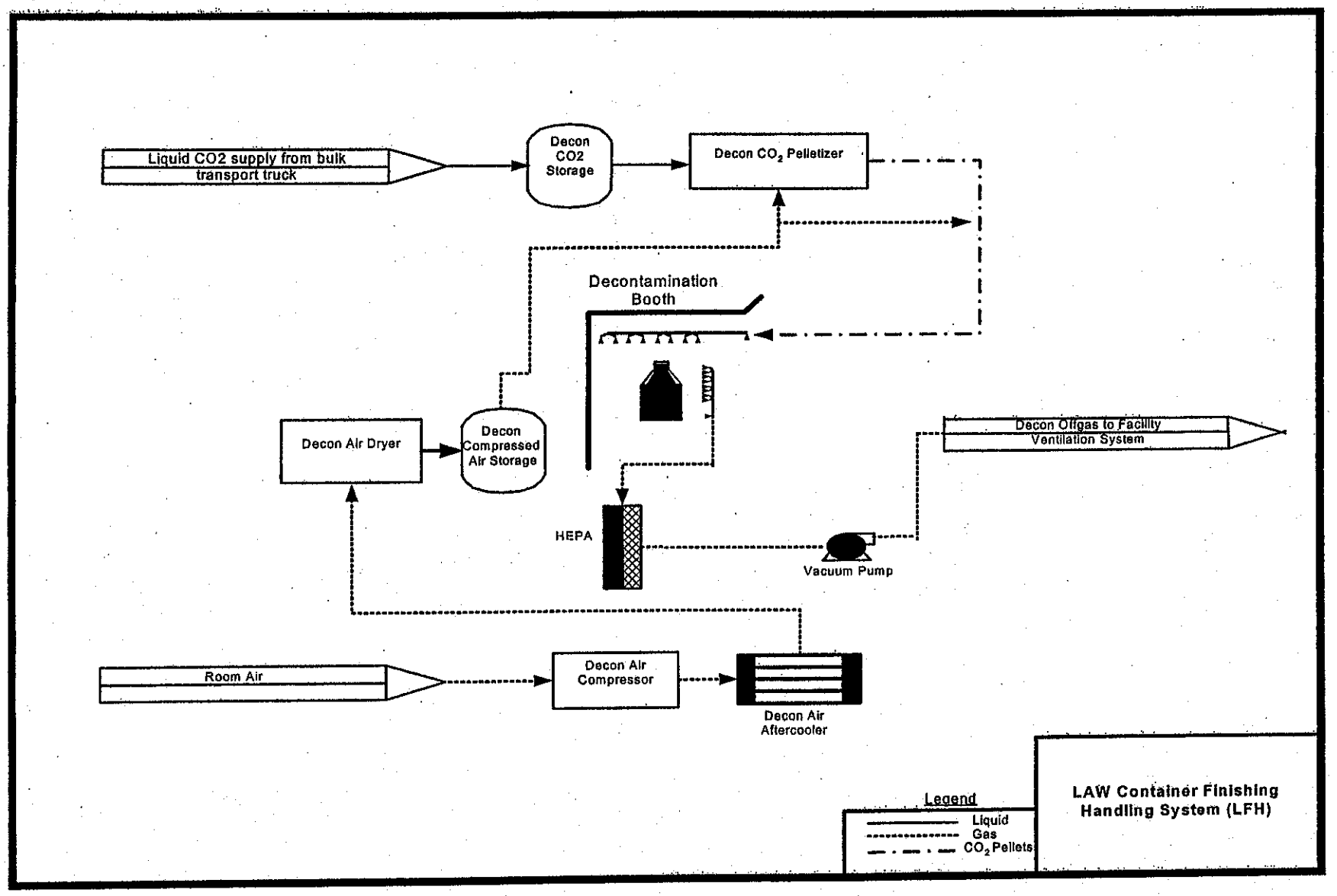

~~The following figure has been deleted:~~

~~Figure 4A-25 LAW Vitrification Plant Radioactive Liquid Waste Disposal System (RLD) and Non-Radioactive Liquid Waste Disposal System (NLD)~~

Figure 4A-25 LAW Vitrification Plant Radioactive Liquid Waste Disposal System (RLD) and Non-Radioactive Liquid Waste Disposal System (NLD)

Figure 4A-25 has been deleted and superceded by process flow diagram 24590-LAW-M5-V17T-P0014 (Attachment 51, Appendix 9.1)

Figure 4A-26 HLW Cave Receipt Process System (HCP) and HLW Melter Feed Process System (HFP)

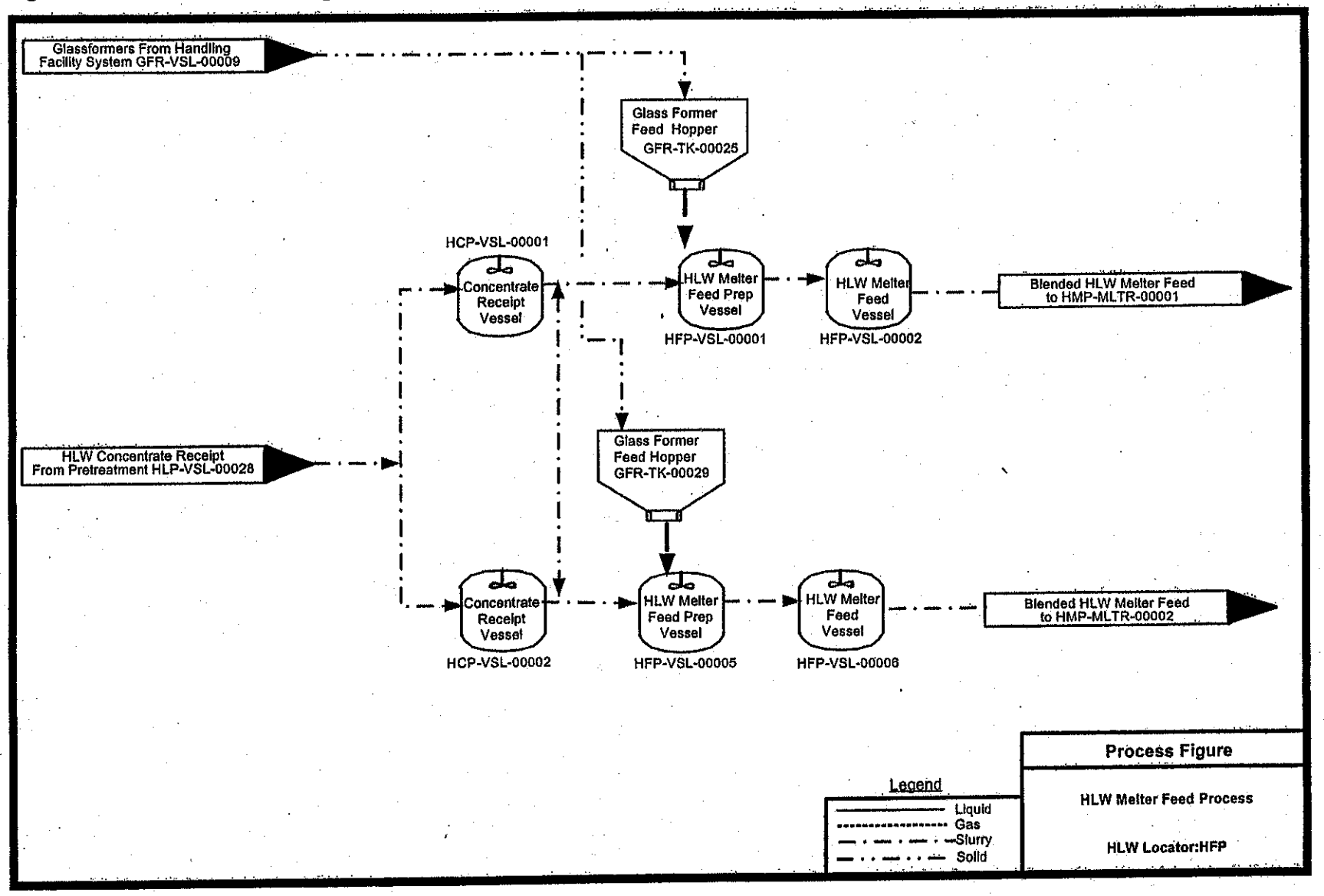

Figure 4A-27 HLW Melter Process System (HMP)

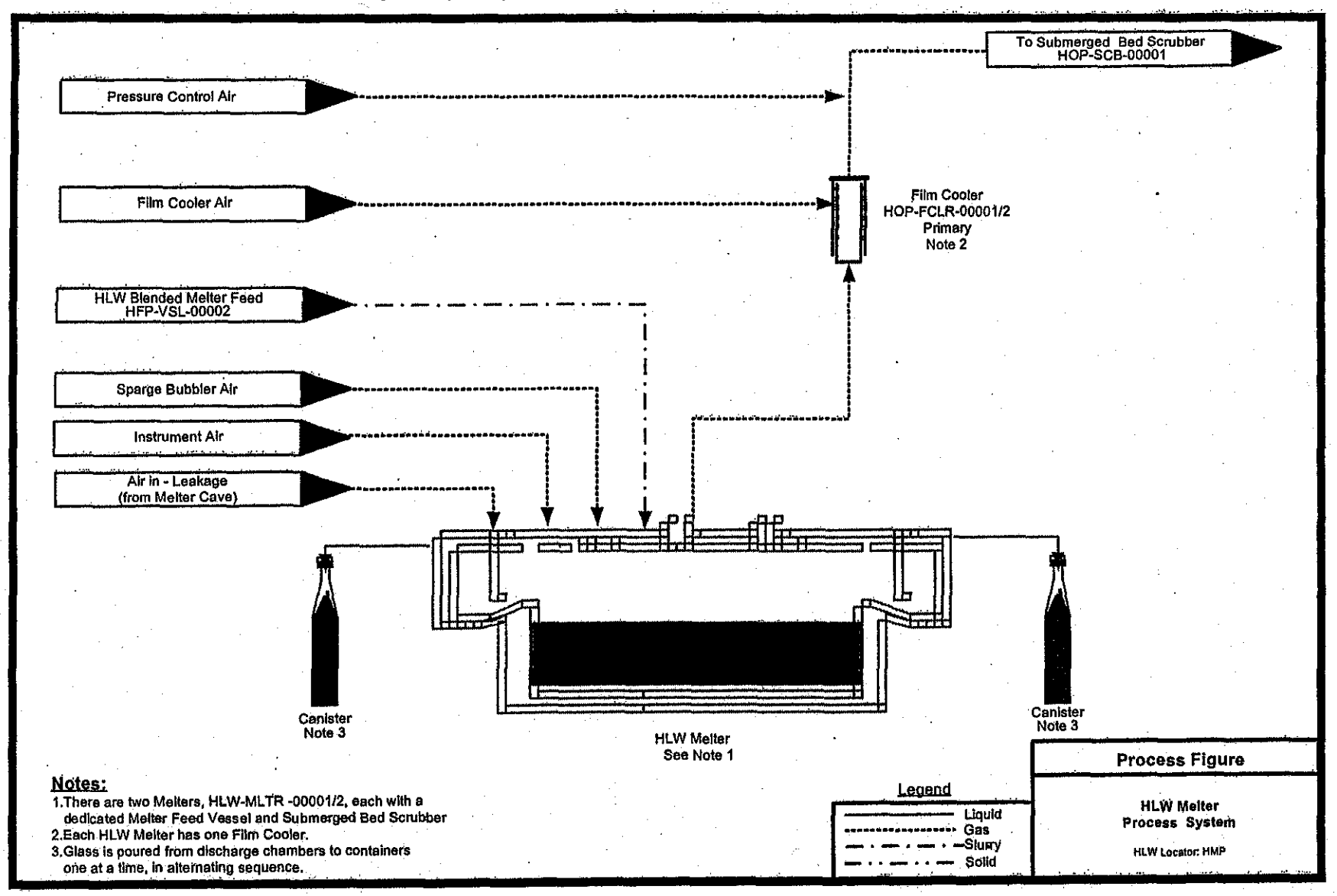

Figure 4A-28 Melter Offgas Treatment Process System (HOP) Primary System

Figure 4A-28 has been deleted and superceded by process flow diagrams 24590-HLW-M5-V17T-P0003 (Attachment 51, Appendix 10.1)

Figure 4A-29 Melter Offgas Treatment Process System (HOP) Secondary System

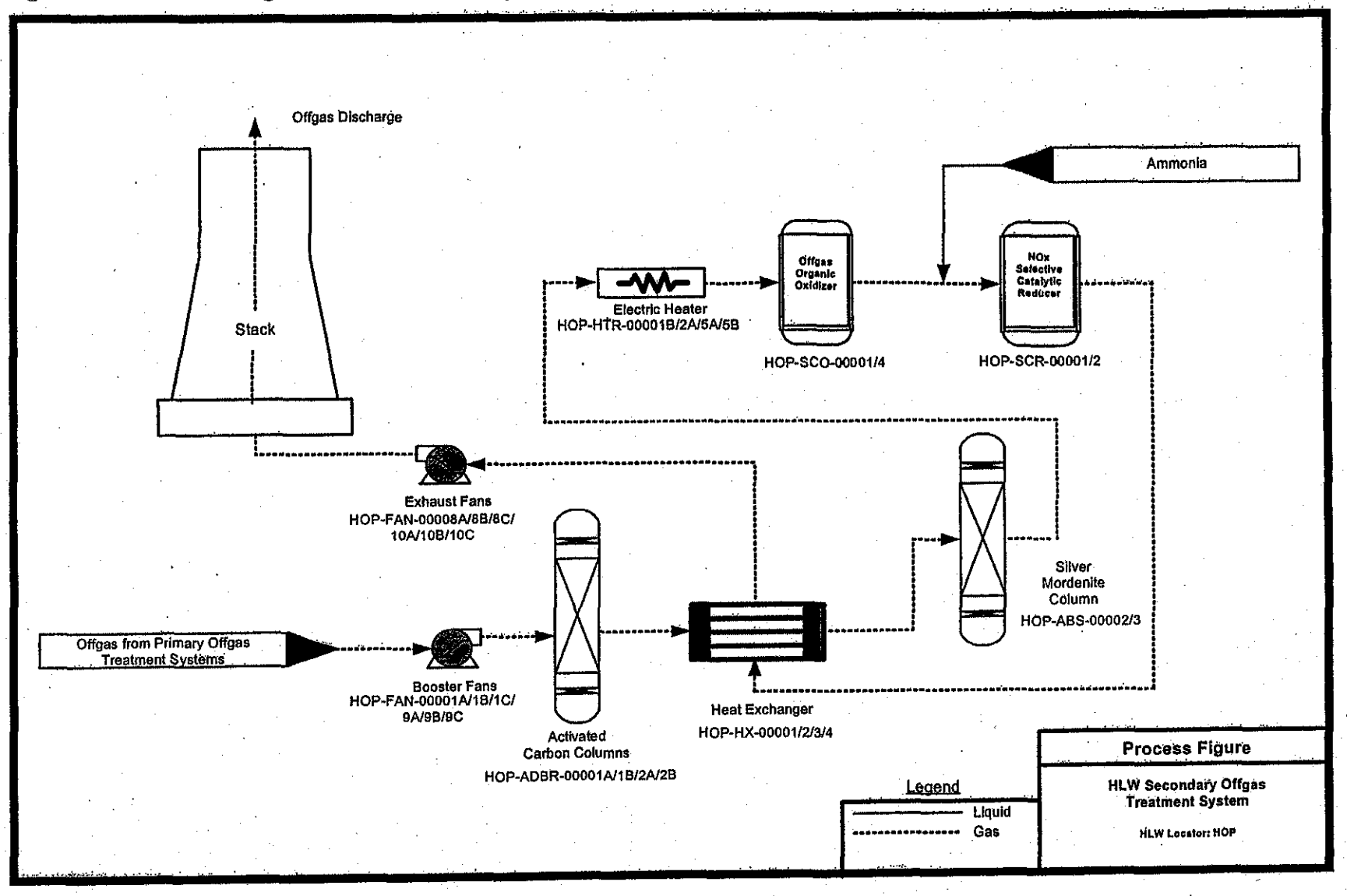

Figure 4A-30 HLW Canister Decontamination Handling System (HDH)

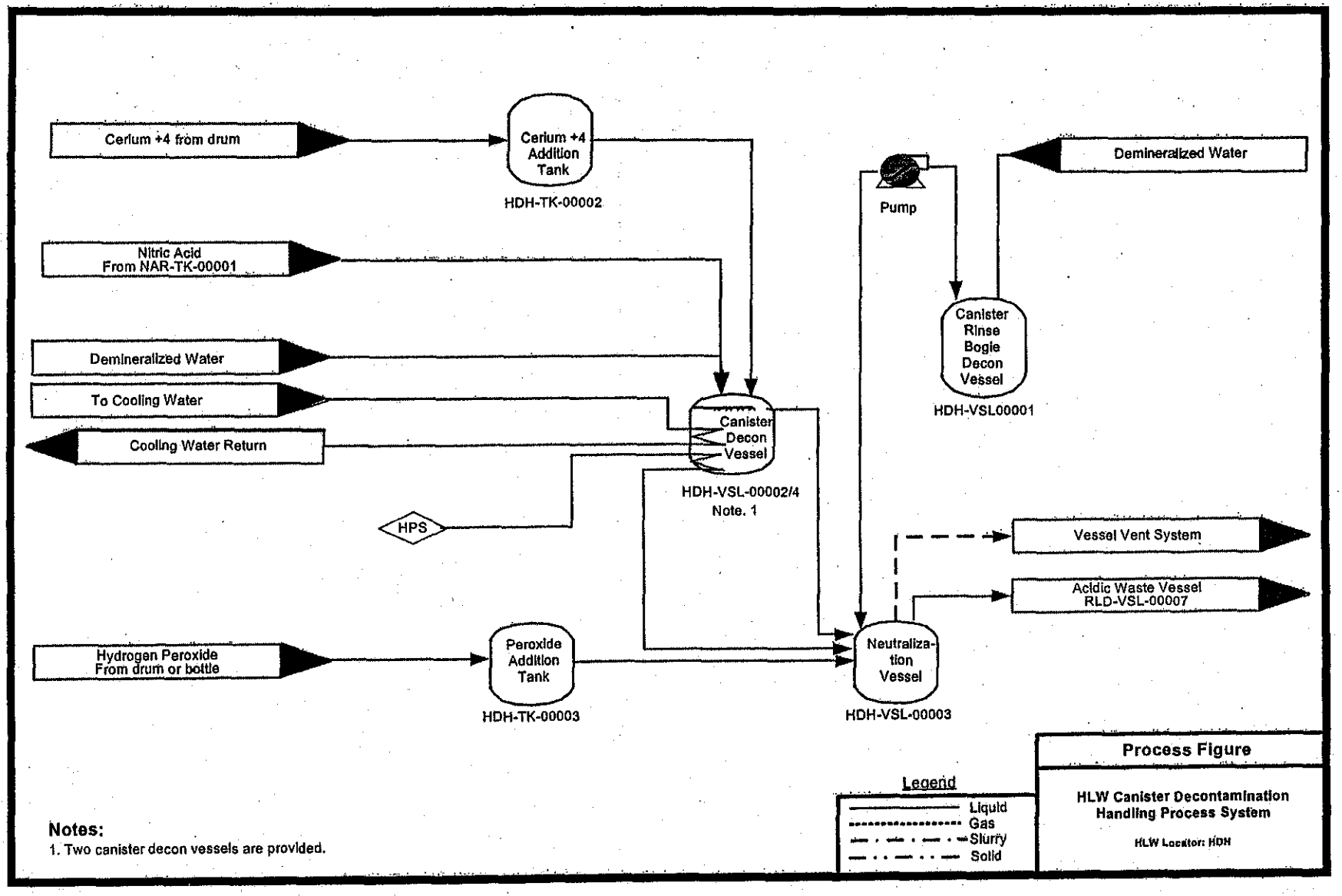

Figure 4A-31 HLW Vitrification Plant Radioactive Liquid Waste Disposal System (RLD) and Non-Radioactive Liquid Waste Disposal System (NLD)

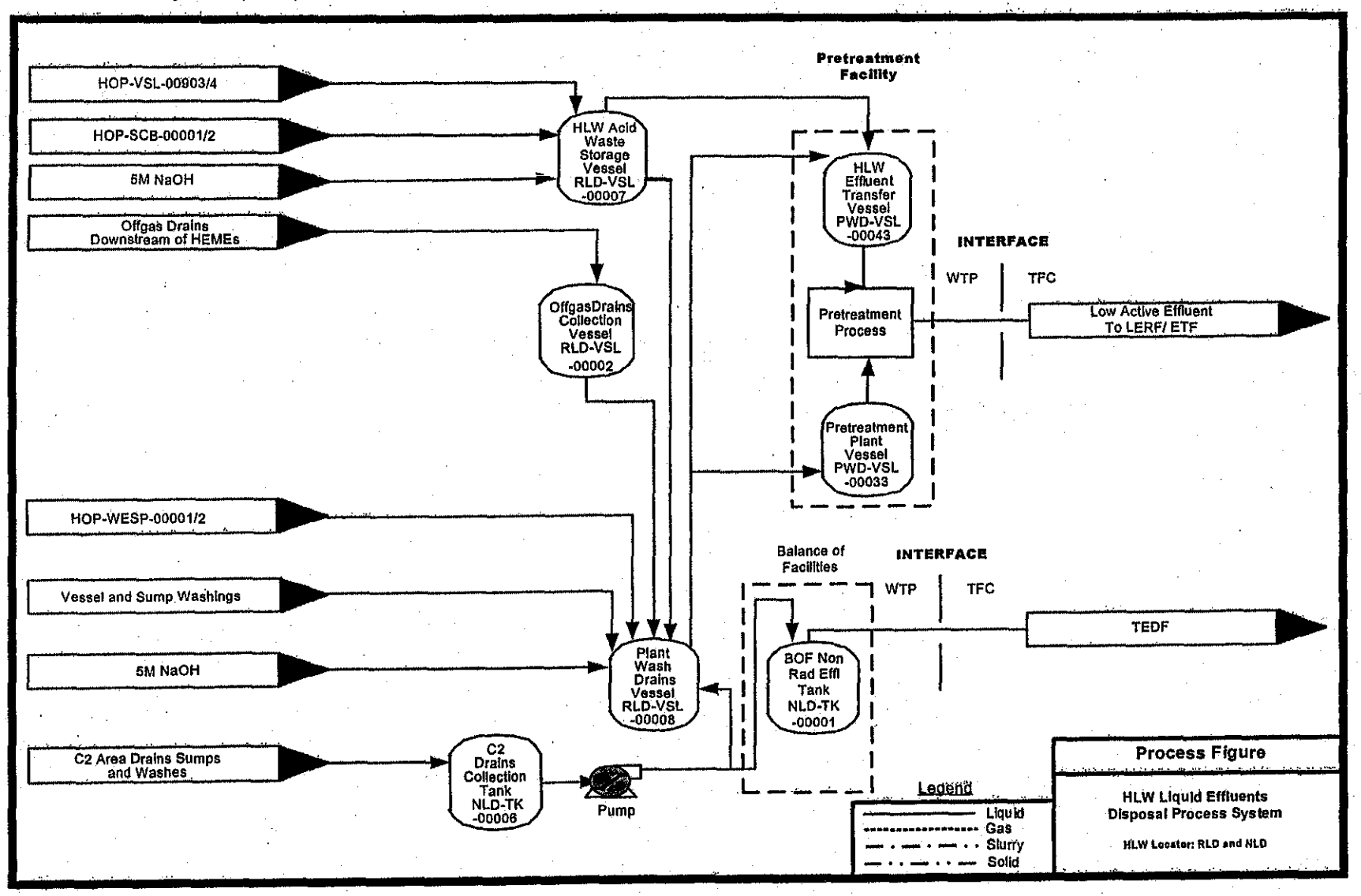

~~The following figures have been deleted:~~

Figure 4A-39 ~~Typical Tank System - Technetium Ion Exchange Column~~Reserved

Figure 4A-44 Typical Tank System - Plant Wash and Disposal System (PWD)

Figure 4A-44 has been deleted and superceded by process flow diagram, 24590-PTF-M5-V17T-P0022002 (Attachment 51, Appendix 8.1)~~PWD vessel drawings~~

Figure 4A-48 Typical System - LAW Melter Process System (LMP)

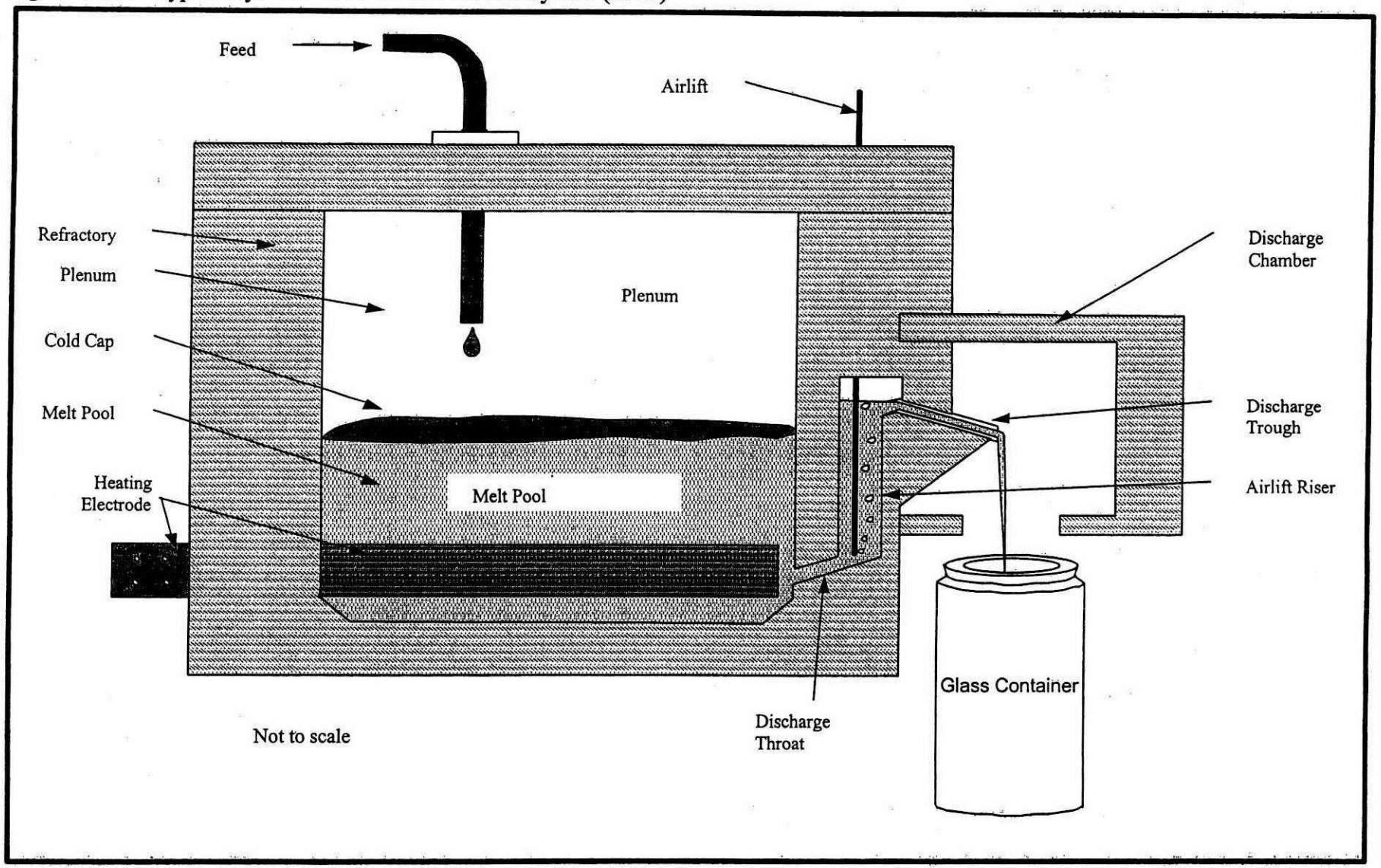

Figure 4A-54 Typical System - HLW Melter Process System (HMP)

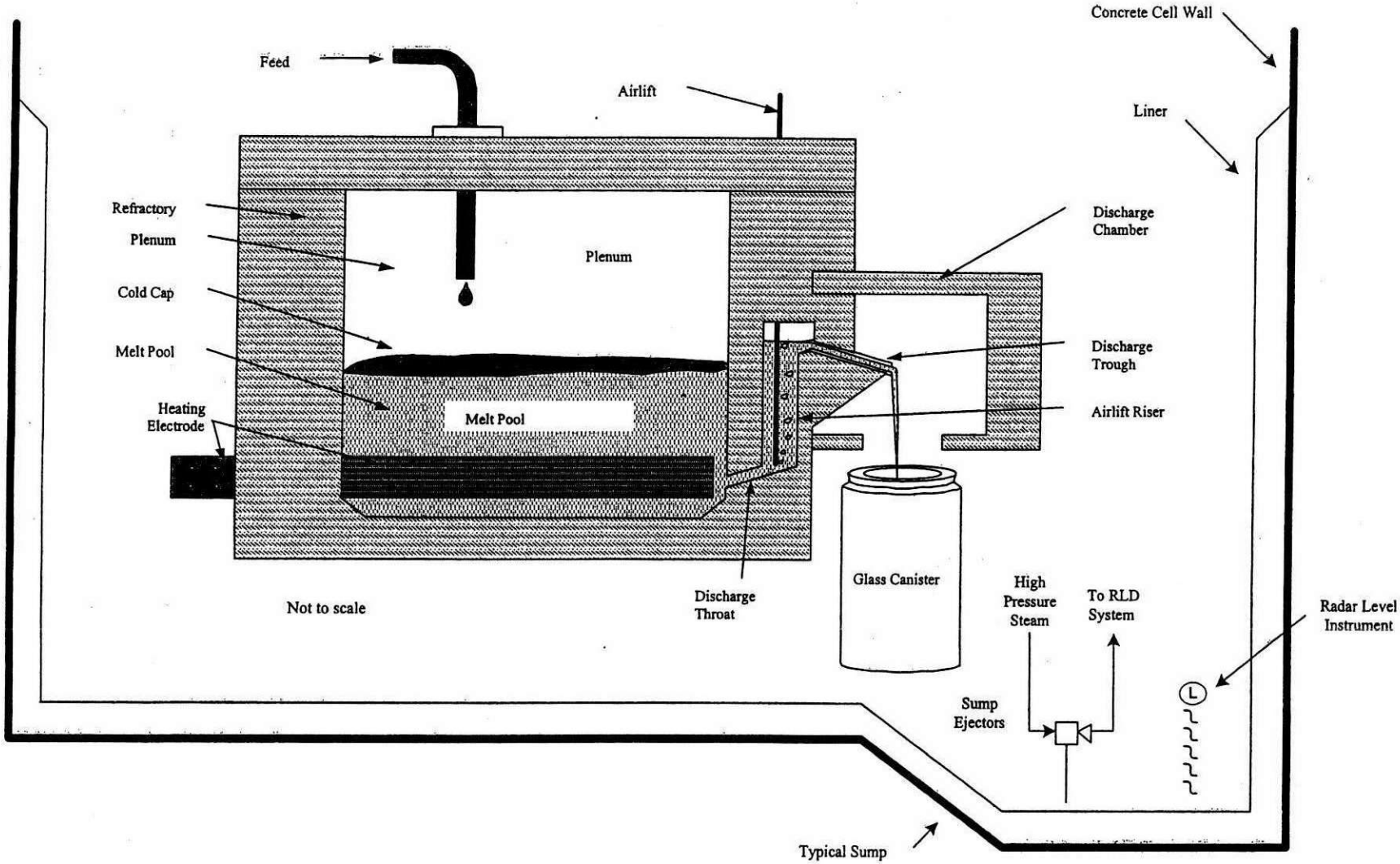

~~The following figures have been deleted:~~

Figure 4A-55 Typical Tank System - Melter Offgas Treatment Process System (HOP)

Figure 4A-55 has been deleted and superceded by equipment assembly drawing 24590-HLW-MV-HOP-P0001 and 24590-HLW-MV-HOP-P0003 (Attachment 51, Appendix 10.6)

Figure 4A-57 Typical Tank System - Radioactive Liquid Waste Disposal System (RLD)

Figure 4A-57 has been deleted and superceded by equipment assembly drawing 24590-LAW-MV-RLD-P0001 (Attachment 51, Appendix 9.6)

Figure 4A-58 ~~Typical System - BOF Container Storage Area~~Reserved

Figure 4A-58 has been deleted because the BOF Container Storage Area was eliminated due to design evolution.

Figure 4A-59 Typical System - Containment Building (Sheet 1)

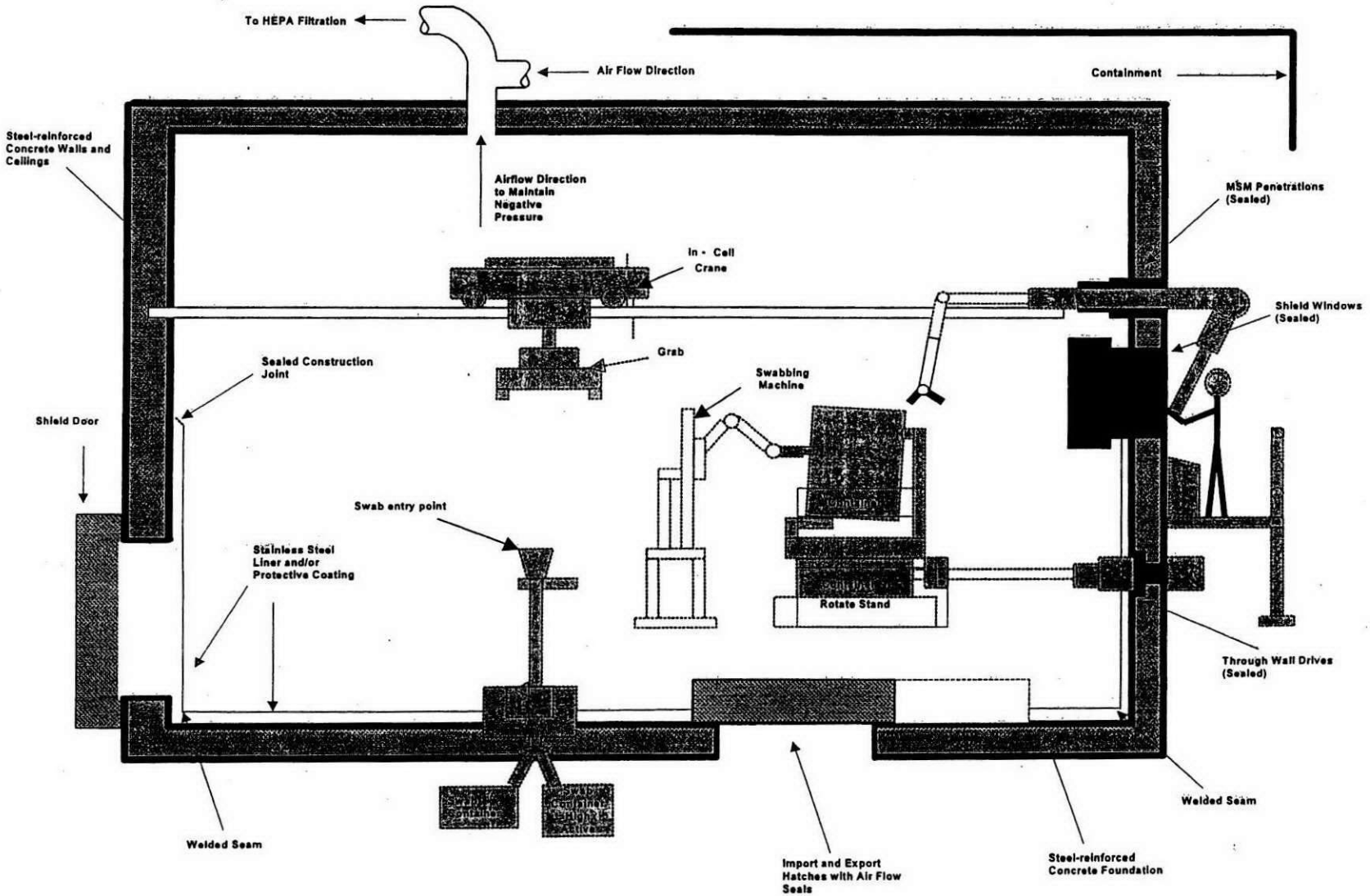

Typical System - Containment Building

Figure 4A-59 Typical System - Containment Building Typical Design Features Crosswalk (Sheet 2)

Containment Building	Negative Cell Air Pressure	Air Flow to HEPA Filters	SS Liner With Welded Seams	Import / Export Hatch - (Controlled Air Gap)	Shield Windows - (Sealed)	Steel Reinforced Concrete Floor/Foundation	Steel Reinforced Concrete Walls & Ceilings	Through Wall MSMs - (Sealed)	In - Cell Bridge Crane / Monorail	Horiz./Vertical Shield Doors - (Controlled Air Gap)	Miscellaneous In-cell Room Equipment
Pretreatment Plant											
Pretreatment Hot Cell Containment Building (P-0123)	X	X	X	X	X	X	X	X	X	X	X
Pretreatment Maintenance Containment Building											
PM0124 Hot Cell Crane Maintenance building	X		X		X	X	X		X		X
P-0121A Spent Resin Dewatering	X	X		X	X	X	X				X
P-0122A Waste Packaging Area	X	X	X	X	X	X	X				X
P-0123A Remote Decontamination Maintenance Cave	X	X	X	X	X	X	X		X		X
P-0124 C3 Workshop	X	X	X	X	X	X	X		X		X
P-0124A C3 Workshop	X	X	X	X	X	X	X		X		X
P-0125 Filter Cask Airlock	X	X		X	X	X	X			X	X
P-0125A Filter Cask Area	X	X	X	X	X	X	X		X		X
P-0128A MSM Repair Area	X	X		X	X	X	X				X
P-0128 Temporary Storage Room	X				X	X	X				X
Pretreatment Filter Package Maintenance Containment Building (P-0223)	X	X	X			X	X			X	X
Pretreatment Air Filter Package Containment Building (P-0355)	X	X	X			X	X			X	X

1

Containment Building	Negative Cell Air Pressure	Air Flow to HEPA Filters	SS Liner With Welded Seams	Import / Export Hatch - (Controlled Air Gap)	Shield Windows - (Sealed)	Steel Reinforced Concrete Floor/Foundation	Steel Reinforced Concrete Walls & Ceilings	Through Wall MSMs - (Sealed)	In - Cell Bridge Crane / Monorail	Horiz./Vertical Shield Doors - (Controlled Air Gap)	Miscellaneous In-cell Room Equipment
LAW Vitrification Plant											
LAW LSM Gallery Containment Building (L-0112)	X	X				X	X			X	X
ILAW Container Finishing Containment Building											
L-0109B Swabbing Cell North Line	X	X		X	X	X	X	X	X	X	X
L-0109C Decontamination Area North Line	X	X		X	X	X	X	X	X	X	X
L-0109D Inert Fill / Welding Area North Line	X	X		X	X	X	X	X	X	X	X
L-0115B Swabbing Cell South Line	X	X		X	X	X	X	X	X	X	X
L-0115C Decontamination Area South Line	X	X		X	X	X	X	X	X	X	X
L-0115D Inert Fill / Welding Area South Line	X	X		X	X	X	X	X	X	X	X
L-0109E Container Monitoring/Export Area - North Line	X	X		X	X	X	X	X	X	X	X
L-0115E Container Monitoring/Export Area - South Line	X	X		X	X	X	X	X	X	X	X
LAW Vit Plant C3 Workshop Containment Building (L-226A)	X	X				X	X		X		X
LAW Consumable Import/Export Containment Building (L-0119B)	X	X				X	X		X		X
LAW Pour Cave Containment Building											
L-B015A Pour Cave (Melter 1)	X	X		X	X	X	X	X	X	X	X
L-B013C Pour Cave (Melter 1)	X	X		X	X	X	X	X	X	X	X
L-B013B Pour Cave (Melter 2)	X	X		X	X	X	X	X	X	X	X
L-B011C Pour Cave (Melter 2)	X	X		X	X	X	X	X	X	X	X
L-B011B (Spare)	X	X		X	X	X	X	X	X	X	X
L-B009B (Spare)	X	X		X	X	X	X	X	X	X	X
ILAW Container Buffer Storage Containment Building											
L-B025C											
L-B025D											

2

1

Containment Building	Negative Cell Air Pressure	Air Flow to HEPA Filters	SS Liner With Welded Seams	Import / Export Hatch - (Controlled Air Gap)	Shield Windows - (Sealed)	Steel Reinforced Concrete Floor/Foundation	Steel Reinforced Concrete Walls & Ceilings	Through Wall MSMs - (Sealed)	In - Cell Bridge Crane / Monorail	Horiz./Vertical Shield Doors - (Controlled Air Gap)	Miscellaneous In-cell Room Equipment
HLW Vitrification Plant											
HLW Melter Cave No. 1 Containment Building:	X	X	X	X	X	X	X	X	X	X	X
H-0117 Melter Cave No. 1	X	X	X	X	X	X	X	X	X	X	X
H-0116B Melter Cave No. 1 - C2/C3 Airlock	X	X				X	X			X	
H-0310A Melter Cave No. 1 Equipment Decontamination Area	X	X	X	X	X	X	X	X	X	X	
HLW Melter Cave No. 2 Containment Building:	X	X	X	X	X	X	X	X	X	X	X
H-0106 Melter Cave No. 2	X	X	X	X	X	X	X	X	X	X	X
H-0105B Melter Cave No. 2 - C2/C3/ Airlock	X	X				X	X		X	X	
H-0304A Melter Cave No. 2 Equipment Decontamination Area	X	X	X	X	X	X	X	X	X	X	
IHLW Canister Handling Cave Containment Building (H-0136)	X	X	X	X	X	X	X	X	X	X	X
IHLW Canister Swab and Monitoring Cave Containment Building (H-0133)	X	X	X	X	X	X	X	X	X	X	
HLW Vit Plant C3 Workshop Containment Building (H-0311A/B)	X	X				X	X				X
HLW Filter Cave Containment Building (H-0104)	X	X		X	X	X	X	X	X	X	X
HLW Waste Handling Area Containment Building:	X	X				X	X				
H-0410B Waste Handling Area	X	X				X	X				
H-0411 Waste Handling Area	X	X				X	X				
HLW Pour Tunnel No. 1 Containment Building (H-B032)	X	X	X	X		X	X		X		
HLW Pour Tunnel No. 2 Containment Building (H-B005A)	X	X	X	X		X	X		X		
HLW Drum Swabbing and Monitoring Area Containment Building:	X	X				X	X		X		
H-0126A/B Swabbing and Monitoring Area	X	X				X	X				
HB-028 Cask Transfer Tunnel	X	X				X	X		X		

2

Figure 4A-60 Simplified General Arrangement Pretreatment - Plan at El. -~~41'~~45'

Figure 4A-60 has been deleted and superceded by general arrangement plan 24590-PTF-P1-P01T-P0006 (Attachment 51, Appendix 8.4)

Figure 4A-61 Simplified General Arrangement Pretreatment - Plan at El. 0'

Figure 4A-61 has been deleted and superceded by general arrangement plan 24590-PTF-P1-P01T-P0001 (Attachment 51, Appendix 8.4)

Figure 4A-62 Simplified General Arrangement Pretreatment - Plan at El. 28'

Figure 4A-62 has been deleted and superceded by general arrangement plan 24590-PTF-P1-P01T-P0002 (Attachment 51, Appendix 8.4)

Figure 4A-66 Simplified General Arrangement LAW - Plan at El. -21'

Figure 4A-66 has been deleted and superceded by general arrangement plan 24590-LAW-P1-P01T-P0001(Attachment 51, Appendix 9.4)

Figure 4A-67 Simplified General Arrangement LAW - Plan at El. 3'

Figure 4A-67 has been deleted and superceded by general arrangement plan 24590-LAW-P1-P01T-P0002 (Attachment 51, Appendix 9.4)

Figure 4A-71 Simplified General Arrangement HLW - Plan at El. -21'

Figure 4A-71 has been deleted and superceded by general arrangement plan 24590-HLW-P1-P01T-P0001 (Attachment 51, Appendix 10.4)

Figure 4A-72 Simplified General Arrangement HLW - Plan at El. 0'

Figure 4A-72 has been deleted and superceded by general arrangement plan 24590-HLW-P1-P01T-P0002 (Attachment 51, Appendix 10.4)

Figure 4A-77 Waste Management Areas Pretreatment - Plan at El. -41'45'

Figure 4A-77 has been deleted. Waste management areas are identified on the ~~corresponding~~following general arrangement plan and section drawings (Attachment 51, Appendix 8.4)~~.~~:
General arrangement plan 24590-PTF-P1-P01T-P0006
Section A-A, 24590-PTF-P1-P01T-P0007
Section B-B, 24590-PTF-P1-P01T-P0008
Section C-C, 24590-PTF-P1-P01T-P0009
Section D-D, 24590-PTF-P1-P01T-P0010
Section E-E, 24590-PTF-P1-P01T-P0011
Section F-F and G-G, 24590-PTF-P1-P01T-P0012
Section H-H and J-J, 24590-PTF-P1-P01T-P0013
Section L-L and K-K, 24590-PTF-P1-P01T-P0014
Section M-M and N-N, 24590-PTF-P1-P01T-P0015
Section P-P and Q-Q, 24590-PTF-P1-P01T-P0016
Section R-R, 24590-PTF-P1-P01T-P0017

Figure 4A-78 Waste Management Areas Pretreatment - Plan at El. 0'

Figure 4A-78 has been deleted. Waste management areas are identified on the ~~corresponding~~following general arrangement plan and section drawings (Attachment 51, Appendix 8.4)~~.~~:
General arrangement plan 24590-PTF-P1-P01T-P0001
Section A-A, 24590-PTF-P1-P01T-P0007
Section B-B, 24590-PTF-P1-P01T-P0008
Section C-C, 24590-PTF-P1-P01T-P0009
Section D-D, 24590-PTF-P1-P01T-P0010
Section E-E, 24590-PTF-P1-P01T-P0011
Section F-F and G-G, 24590-PTF-P1-P01T-P0012
Section H-H and J-J, 24590-PTF-P1-P01T-P0013
Section L-L and K-K, 24590-PTF-P1-P01T-P0014
Section M-M and N-N, 24590-PTF-P1-P01T-P0015
Section P-P and Q-Q, 24590-PTF-P1-P01T-P0016
Section R-R, 24590-PTF-P1-P01T-P0017

Figure 4A-79 Waste Management Areas Pretreatment - Plan at El. 28'

Figure 4A-79 has been deleted. Waste management areas are identified on the ~~corresponding~~following general arrangement plan and section drawings (Attachment 51, Appendix 8.4)~~.~~:
General arrangement plan 24590-PTF-P1-P01T-P0002
Section A-A, 24590-PTF-P1-P01T-P0007
Section B-B, 24590-PTF-P1-P01T-P0008
Section C-C, 24590-PTF-P1-P01T-P0009
Section D-D, 24590-PTF-P1-P01T-P0010
Section E-E, 24590-PTF-P1-P01T-P0011
Section F-F and G-G, 24590-PTF-P1-P01T-P0012
Section H-H and J-J, 24590-PTF-P1-P01T-P0013
Section L-L and K-K, 24590-PTF-P1-P01T-P0014
Section M-M and N-N, 24590-PTF-P1-P01T-P0015
Section P-P and Q-Q, 24590-PTF-P1-P01T-P0016
Section R-R, 24590-PTF-P1-P01T-P0017

Figure 4A-82 Waste Management Areas LAW - Plan at El. -21'

Figure 4A-82 has been deleted. Waste management areas are identified on the ~~corresponding~~following general arrangement plan and section drawings (Attachment 51, Appendix 9.4)~~.~~:
General arrangement plan 24590-LAW-P1-P01T-P0001
Section A-A, B-B, and C-C, 24590-LAW-P1-P01T-P0007
Section D-D, E-E, and F-F, 24590-LAW-P1-P01T-P0008
Section G-G, H-H, and J-J, 24590-LAW-P1-P01T-P0009
Section K-K and L-L, 24590-LAW-P1-P01T-P0010

Figure 4A-83 Waste Management Areas LAW - Plan at El. 3'

Figure 4A-83 has been deleted. Waste management areas are identified on the ~~corresponding~~following general arrangement plan and section drawings (Attachment 51, Appendix 9.4)~~.~~
General arrangement plan 24590-LAW-P1-P01T-P0002
Section A-A, B-B, and C-C, 24590-LAW-P1-P01T-P0007
Section D-D, E-E, and F-F, 24590-LAW-P1-P01T-P0008
Section G-G, H-H, and J-J, 24590-LAW-P1-P01T-P0009
Section K-K and L-L, 24590-LAW-P1-P01T-P0010

Figure 4A-86 Waste Management Areas HLW - Plan at El. -21'

Figure 4A-86 has been deleted. Waste management areas are identified on the ~~corresponding~~following general arrangement plan and section drawings (Attachment 51, Appendix 10.4):~~.~~
General arrangement plan 24590-HLW-P1-P01T-P0001
Section A-A, B-B, and C-C, 24590-HLW-P1-P01T-P0008
Section D-D, E-E, and F-F, 24590-HLW-P1-P01T-P0009
Section G-G and H-H, 24590-LAW-P1-P01T-P0010
Section J-J and K-K, 24590-LAW-P1-P01T-P0011

Figure 4A-87 Waste Management Areas HLW - Plan at El. 0'

Figure 4A-87 has been deleted. Waste management areas are identified on the ~~corresponding~~following general arrangement plan and section drawings (Attachment 51, Appendix 10.4):
General arrangement plan 24590-HLW-P1-P01T-P0002
Section A-A, B-B, and C-C, 24590-HLW-P1-P01T-P0008
Section D-D, E-E, and F-F, 24590-HLW-P1-P01T-P0009
Section G-G and H-H, 24590-LAW-P1-P01T-P0010
Section J-J and K-K, 24590-LAW-P1-P01T-P0011

Figures 4A-90 through 4A-106 have been deleted consistent with DOE direction to remove unnecessary references to radionuclides (DOE letter 03-ED-047 dated April4, 2003).

Figure 4A-90 Contamination/Radiation Area Boundaries Pretreatment - Plan at El. -41'45'

Figure 4A-91 Contamination/Radiation Area Boundaries Pretreatment - Plan at El. 0'

Figure 4A-92 Contamination/Radiation Area Boundaries Pretreatment - Plan at El. 28'

Figure 4A-93 Contamination/Radiation Area Boundaries Pretreatment - Plan at El. 56'

Figure 4A-94 Contamination/Radiation Area Boundaries Pretreatment - Plan at El. 77'

Figure 4A-95 Contamination/Radiation Area Boundaries Pretreatment - Plan at El. 98'

Figure 4A-96 Contamination/Radiation Area Boundaries LAW - Plan at El. -21'

Figure 4A-97 Contamination/Radiation Area Boundaries LAW - Plan at El. 3'

Figure 4A-98 Contamination/Radiation Area Boundaries LAW - Plan at El. 22'

Figure 4A-99 Contamination/Radiation Area Boundaries LAW - Plan at El. 28'

Figure 4A-100 Contamination/Radiation Area Boundaries LAW - Plan at El. 48'

Figure 4A-101 Contamination/Radiation Area Boundaries HLW - Plan at El. -21'

Figure 4A-102 Contamination/Radiation Area Boundaries HLW - Plan at El. 0'

Figure 4A-103 Contamination/Radiation Area Boundaries HLW - Plan at El. 11'

Figure 4A-104 Contamination/Radiation Area Boundaries HLW - Plan at El. 30'

Figure 4A-105 Contamination/Radiation Area Boundaries HLW - Plan at El. 49'

Figure 4A-106 Contamination/Radiation Area Boundaries HLW - Plan at El. 62'

Figure 4A-107 Analytical Laboratory Main Level General Arrangement

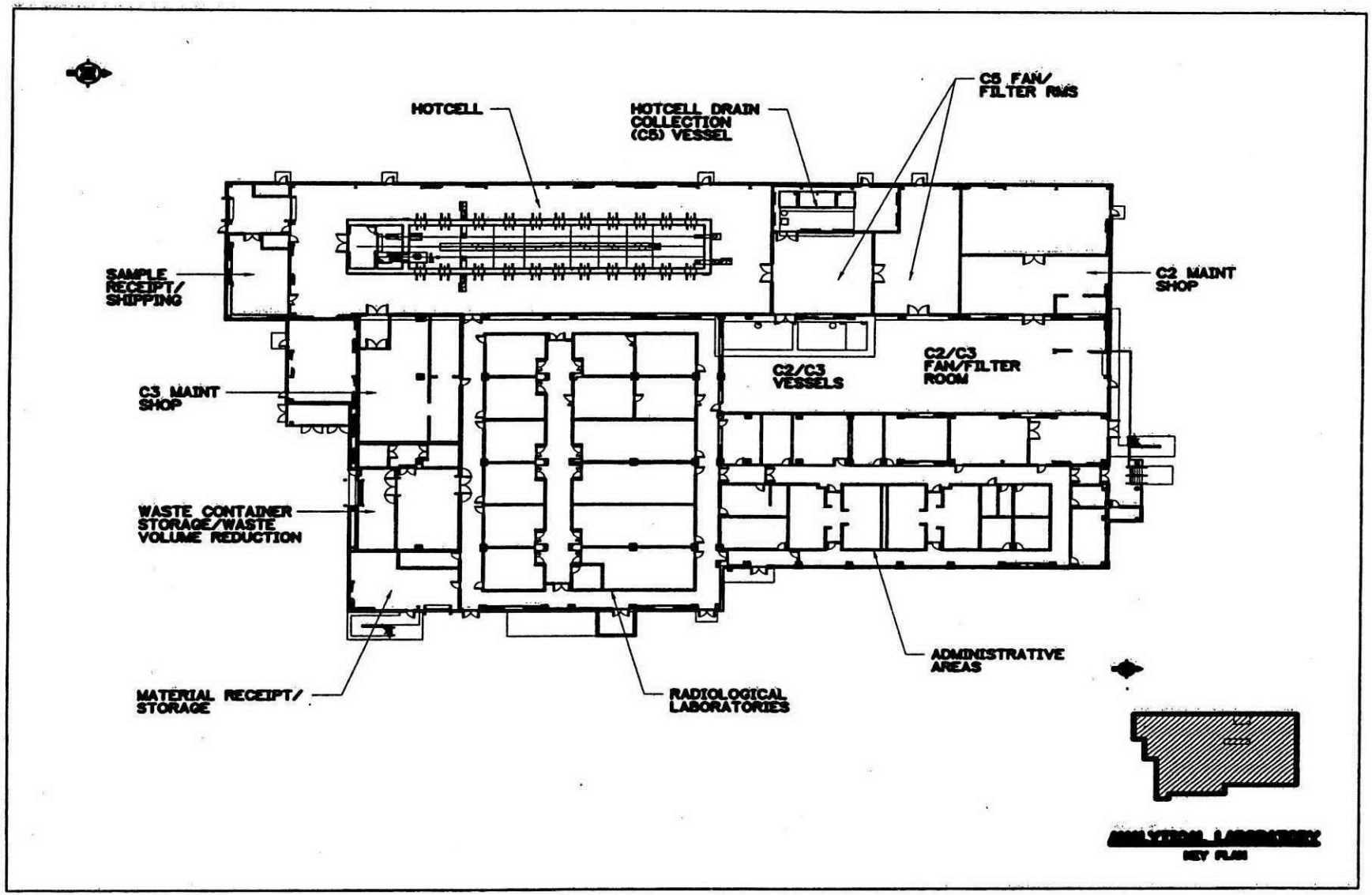

Figure 4A-108 Analytical Laboratory ~~Second Floor~~Main Level General Arrangement (Office Area)

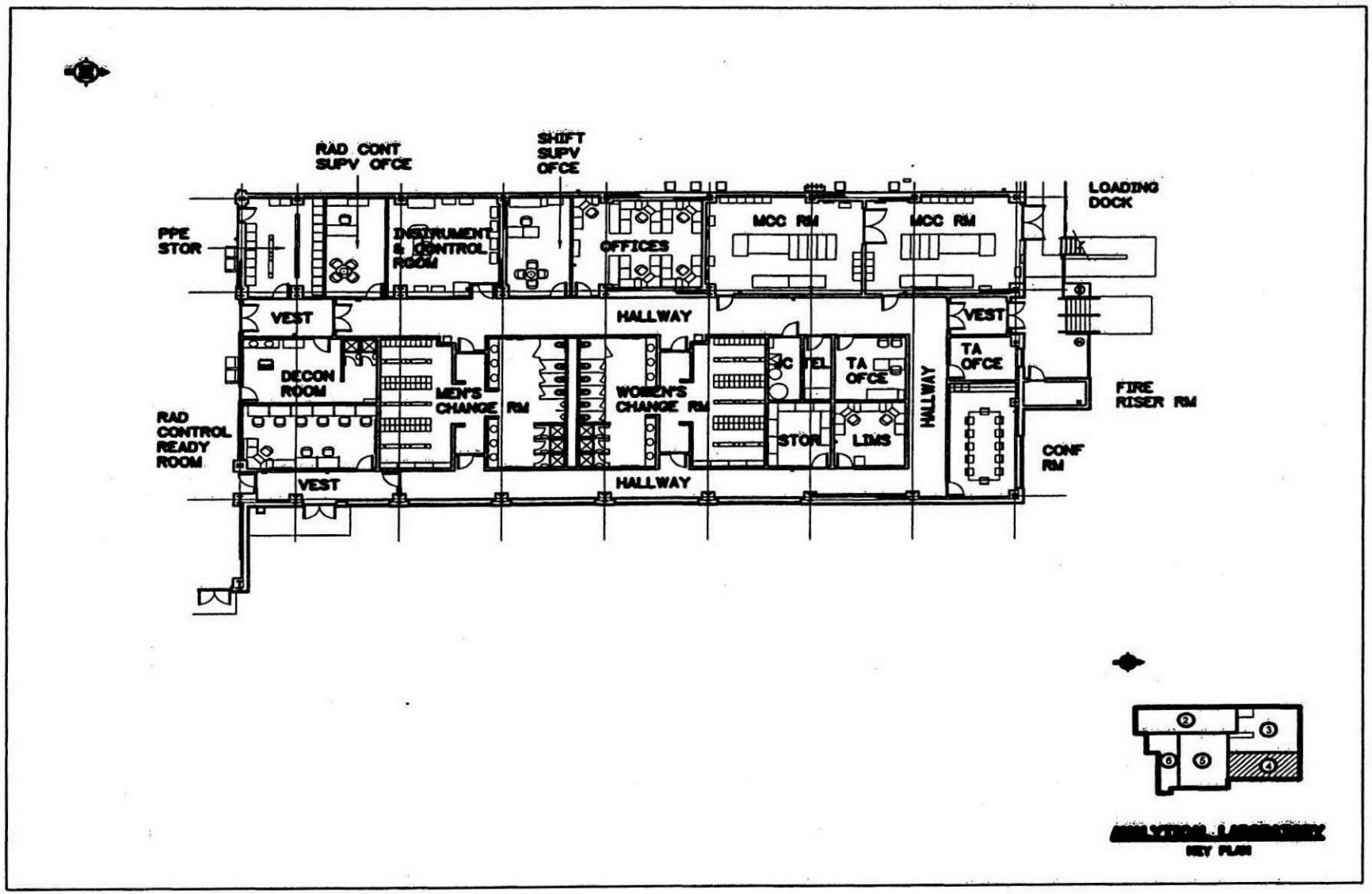

Figure 4A-109 Analytical Laboratory ~~Hot Cell~~Second Level General Arrangement

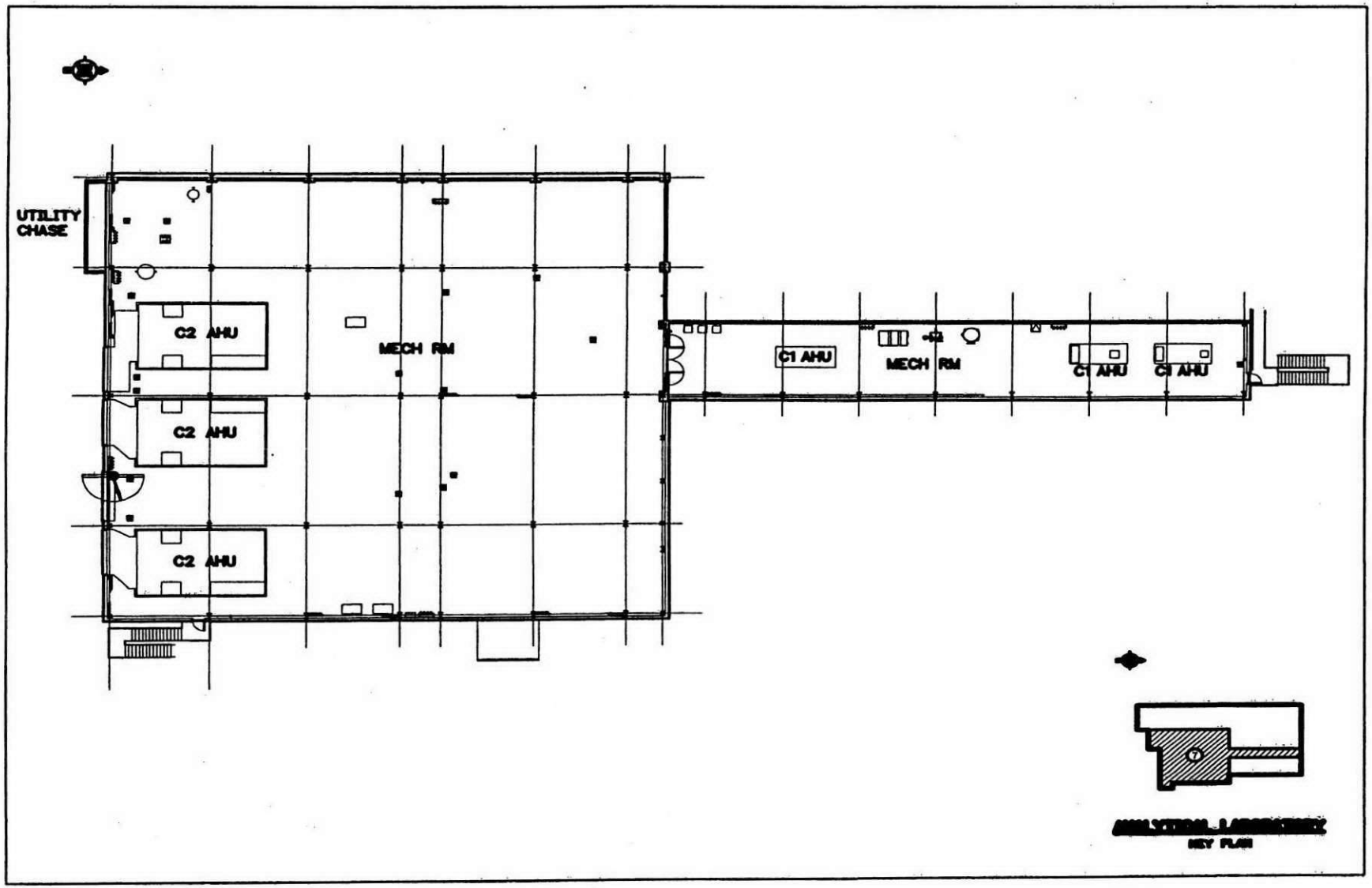

Figure 4A-110 Analytical Laboratory ~~Basement~~ Below Grade Level General Arrangement (Tank Systems)

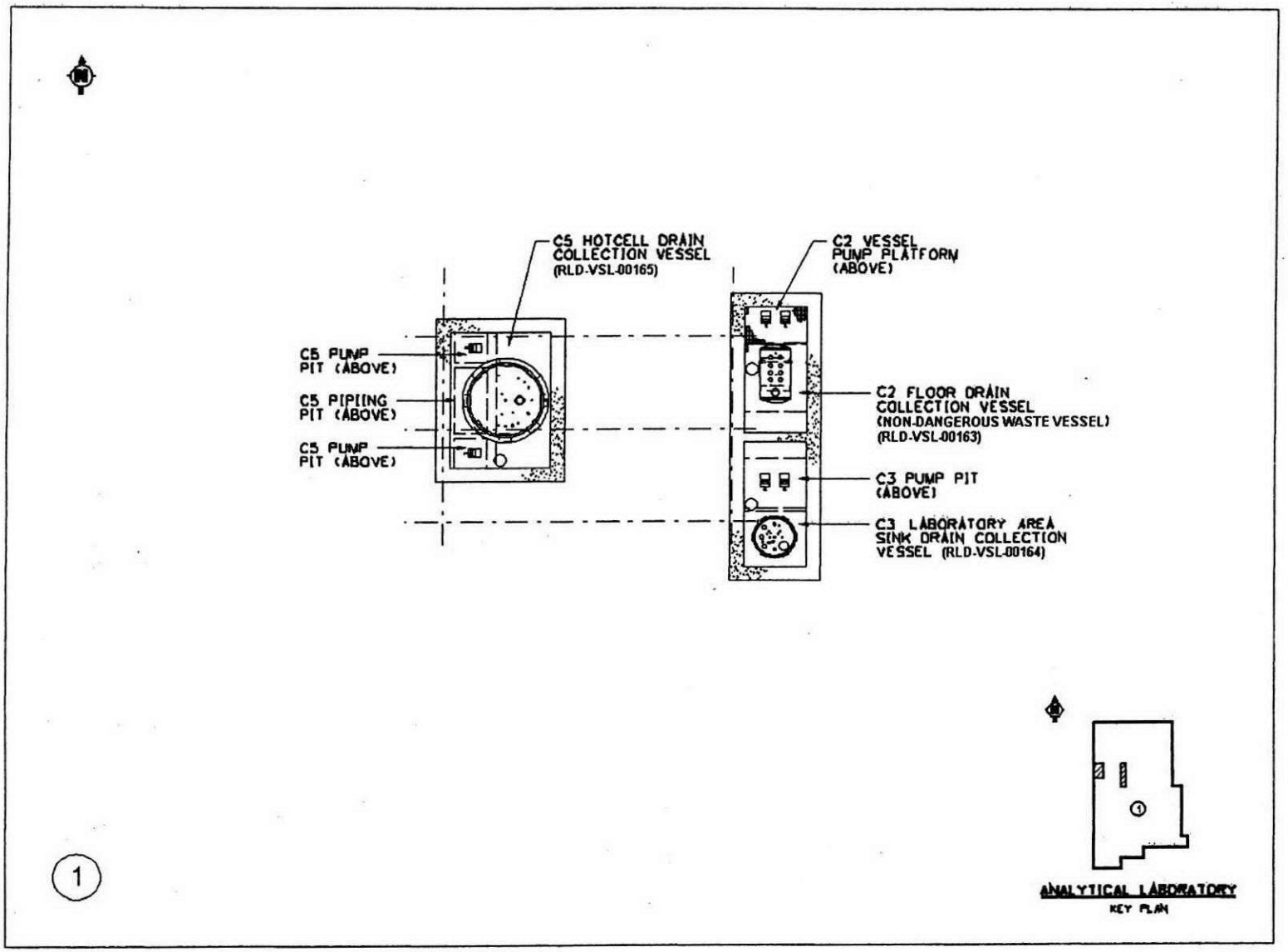

Figure 4A-111 Simplified Analytical Laboratory ~~Hot Cell Mechanical Systems~~Process and Ventilation Flow Diagram

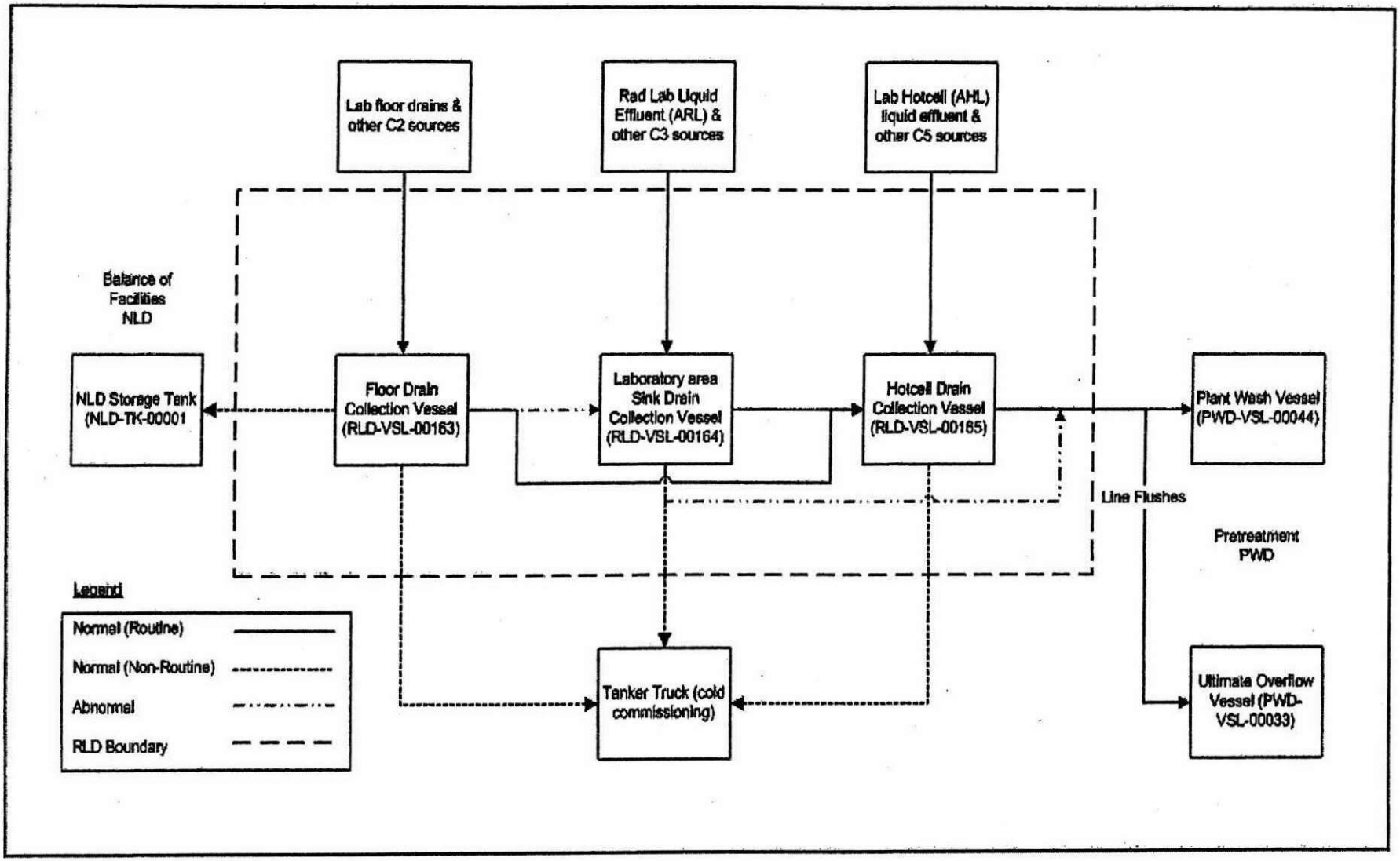

Figure 4A-112 Analytical Laboratory ~~Simplified Process Flow~~Main Level General Arrangement (Rad Labs)

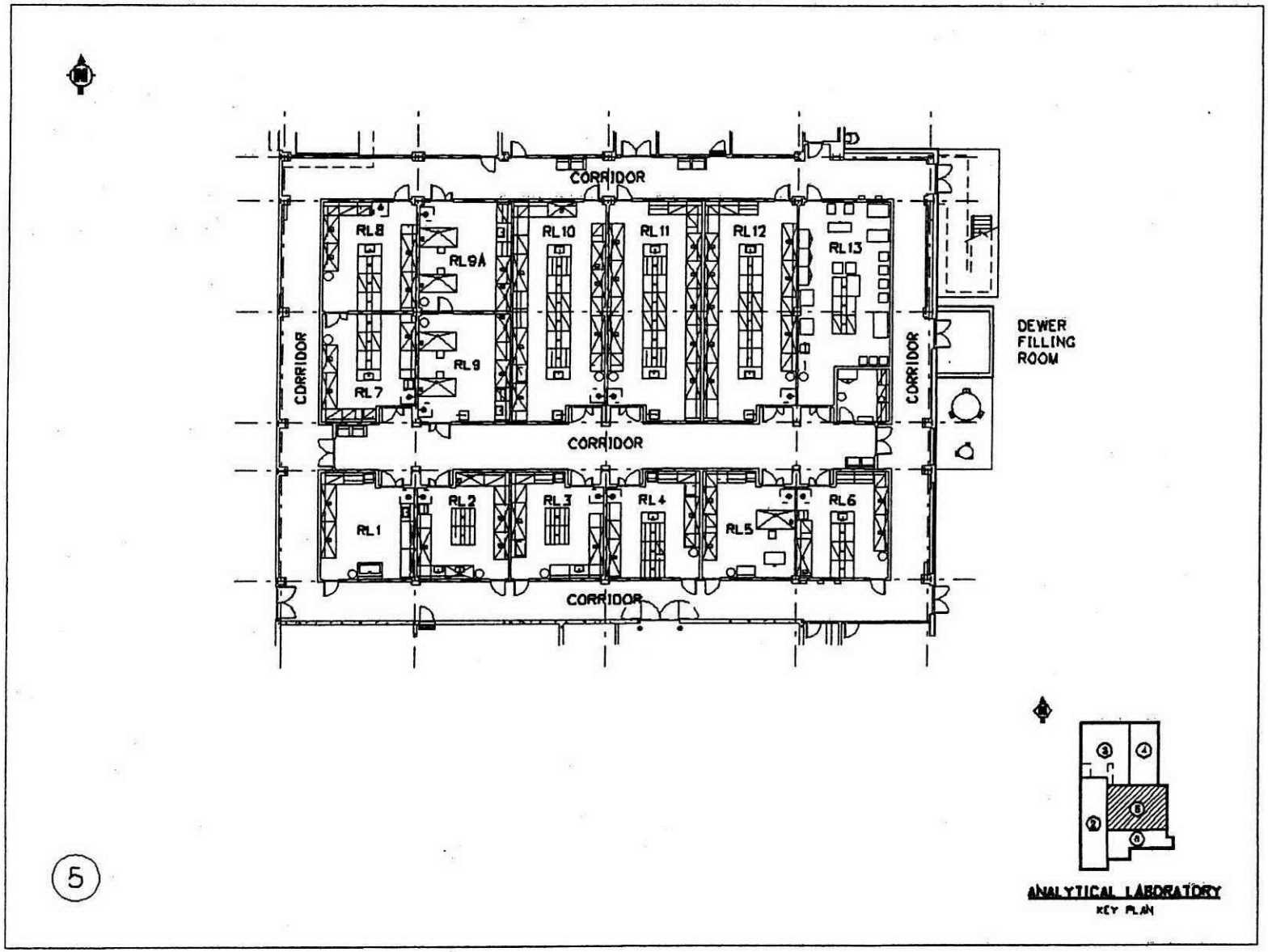

Figure 4A-112 (cont.)

Proposed RAD LAB Utilization

LAB – RL1	Sample Receipt
LAB – RL2	Dissolution / Dilution
LAB – RL3	Distillation / Titration
LAB – RL4	Standard / Reagent Prep
LAB – RL5	Process Technology (X-Ray)
LAB – RL6	~~Instrument~~Process Technology (FT-IR)
LAB – RL7	~~Organic Quantitation~~Process Technology (Particle Size)
LAB – RL8	~~Organic Quantitation~~Process Technology
LAB – RL9	Elemental Analysis
LAB – RL9A	Elemental Analysis
LAB – RL10	General Chemistry
LAB – RL11	Radionuclide Prep
LAB – RL12	Radionuclide Prep
LAB – RL13	Radionuclide Counting
LAB	Rad Control Counting Room

Figure 4A-113 Analytical Laboratory ~~Tank System~~ Main Level General Arrangement (Hot Cells)

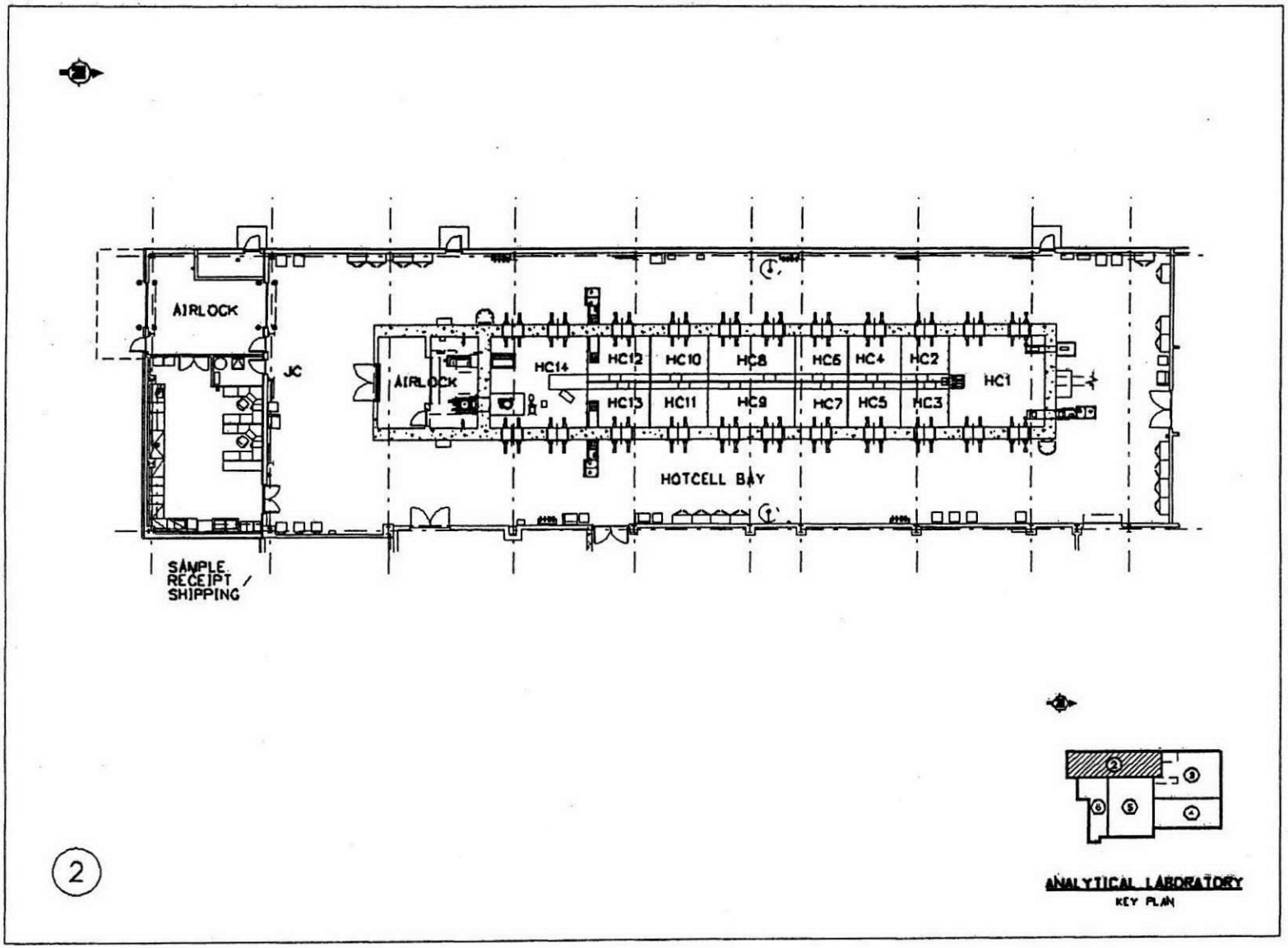

Figure 4A-113 (cont.)

Proposed HOTCELL Utilization

Hotcell – HC1	Sample Receipt / Sample Export
Hotcell – HC2	Sample Prep
Hotcell – HC3	Sample Prep
Hotcell – HC4	~~Organic~~Glass Prep
Hotcell – HC5	~~Organic Prep~~Particle Size / Rheology
Hotcell – HC6	Dissolution / Dilution
Hotcell – HC7	Dissolution / Dilution
Hotcell – HC8	Radionuclide Prep
Hotcell – HC9	Radionuclide Prep
Hotcell – HC10	Ion Chrom & TIC/TOC Prep
Hotcell – HC11	~~Spec 12 &~~ Boildown
Hotcell – HC12	ICP Prep / Sample Export
Hotcell – HC13	ICP Prep / Sample Export
Hotcell – HC14	Waste Packaging / Volume Reduction

Figure 4A-114 Analytical Laboratory Main ~~Floor Ventilation~~Level General Arrangement (Waste Management Area)

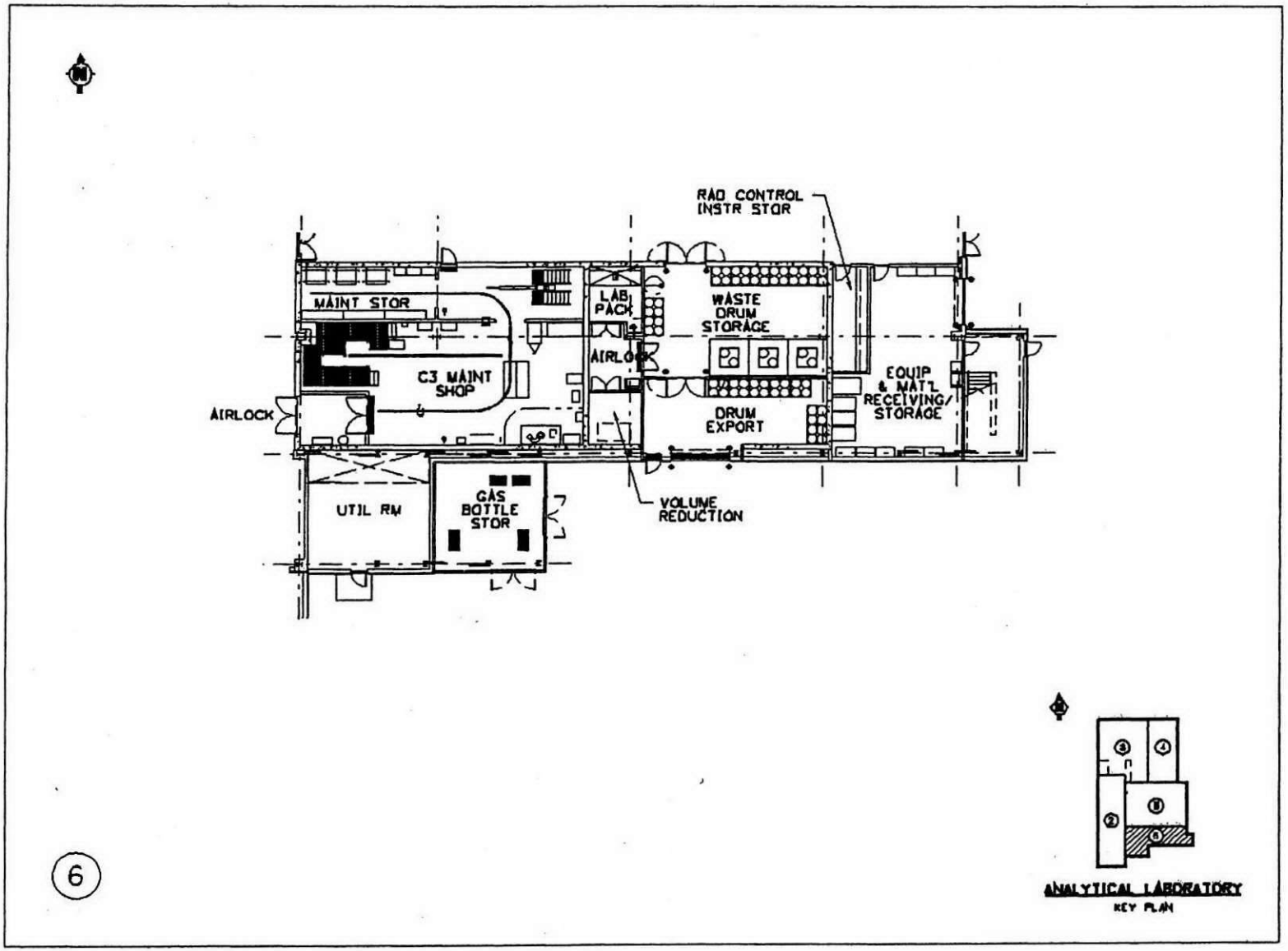

Figure 4A-115 Analytical Laboratory ~~Second Floor Ventilation~~ Simplified Process Flow Diagram (RLD)

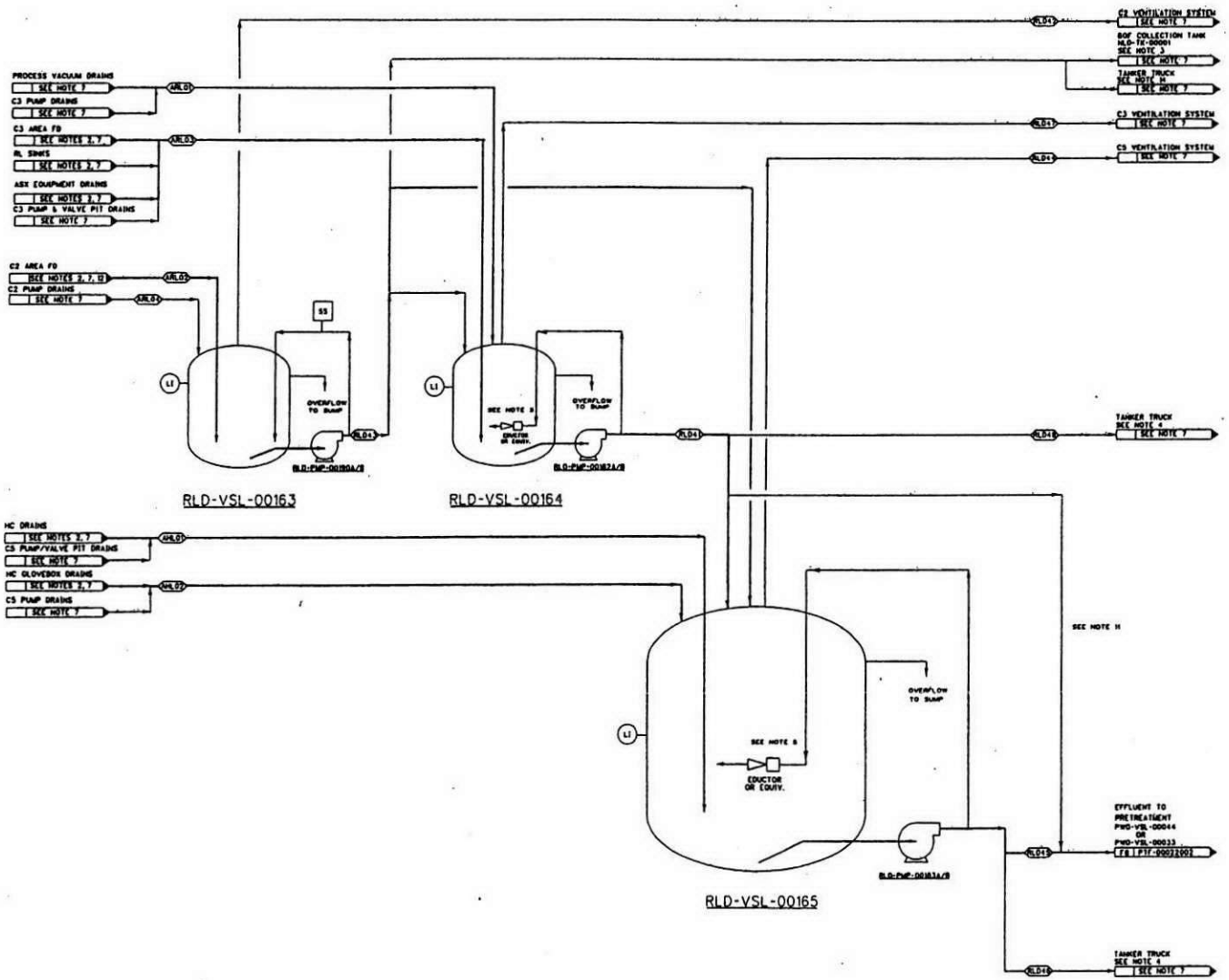

Figure 4A-116 Analytical Laboratory ~~Hot Cell Ventilation~~ Simplified HVAC Description

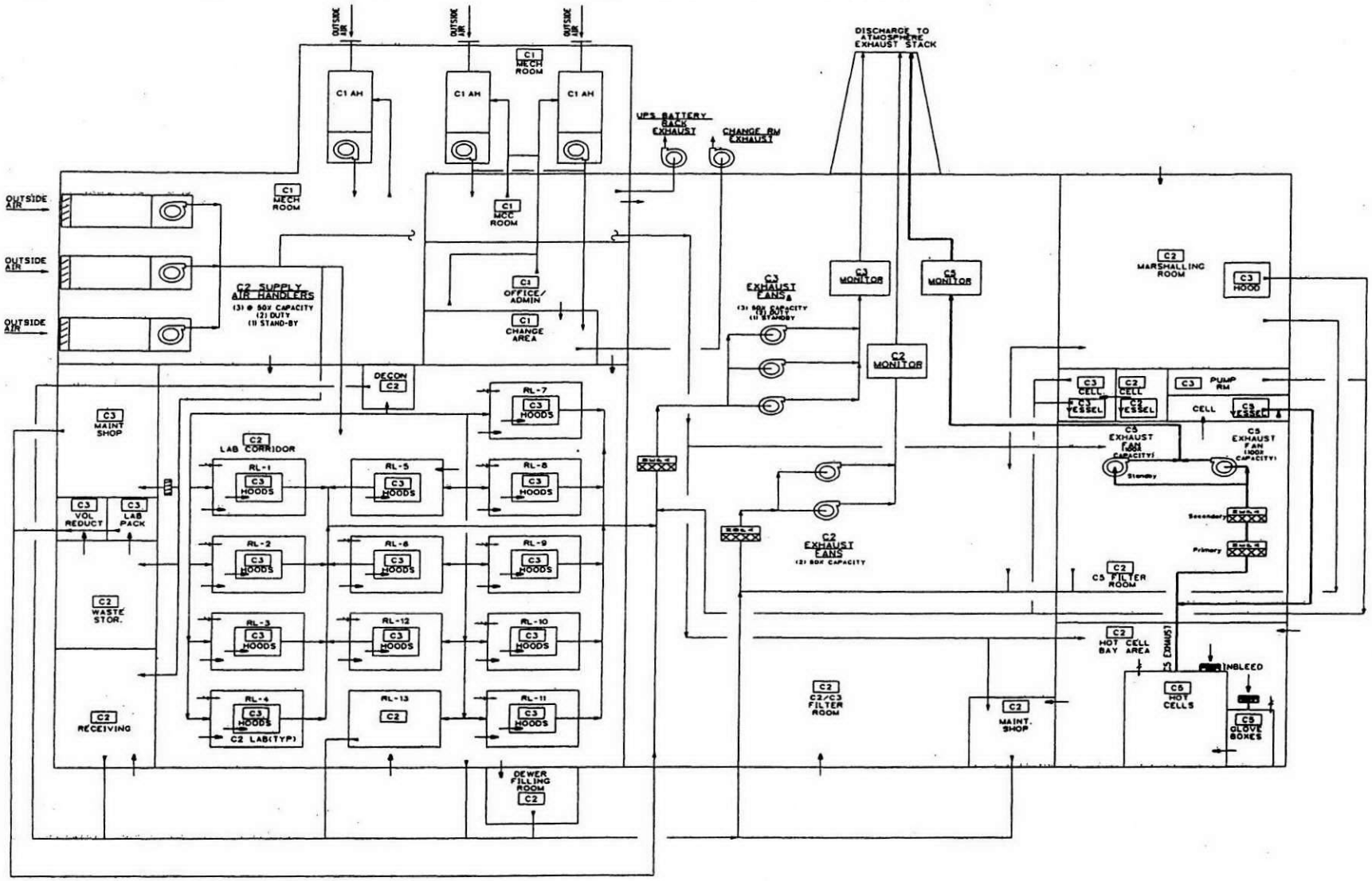

Figure 4A-117 Analytical Laboratory ~~Basement Level Ventilation~~ Main Level General Arrangement (Filter/Fan Rooms)

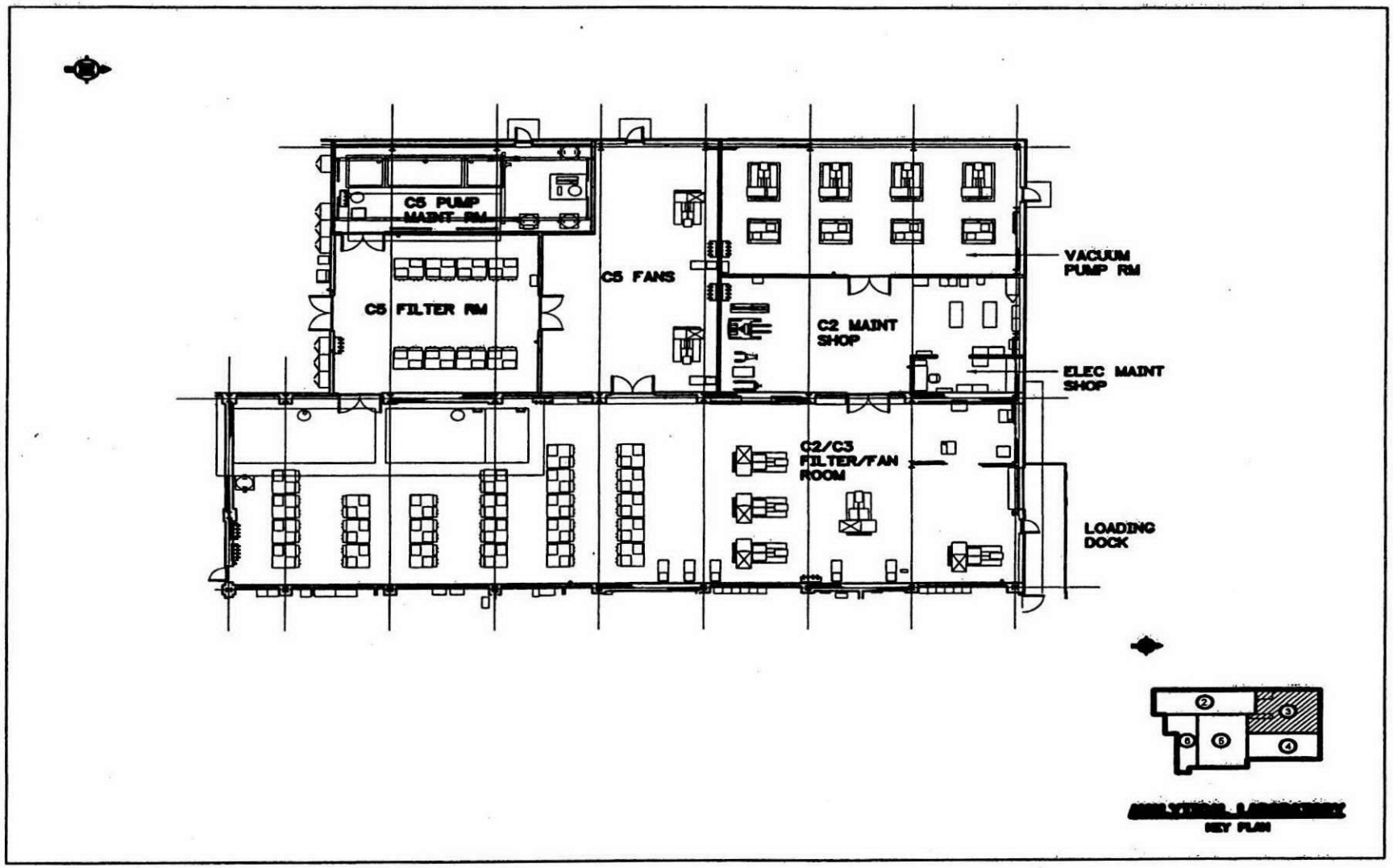

~~The following figures have been deleted:~~

Figure 4A-125 Typical Dry (Type I) Sump

~~This f~~Figure 4A-125~~igure~~ has been deleted and superseded by:

24590-WTP-PER-CSA-02-001, *Secondary Containment Design* (Attachment 51, Appendix 7.5)
24590-PTF-PER-M-02-006, *Sump Data for PT Facility* (Attachment 51, Appendix 8.5)
24590-LAW-PER-M-02-001, *LAW Facility Sump Data* (Attachment 51, Appendix 9.8)
24590-HLW-PER-M-02-001, *HLW Facility Sump Data* (Attachment 51, Appendix 10.5)

Figure 4A-126 Typical Wet (Type II) Sump

Figure 4A-126 has been deleted since the WTP will not contain wet (Type II) sumps

Figure 4A-128 Simplified Process Flow Figure - Pretreatment Pulse Jet Ventilation System (PJV)

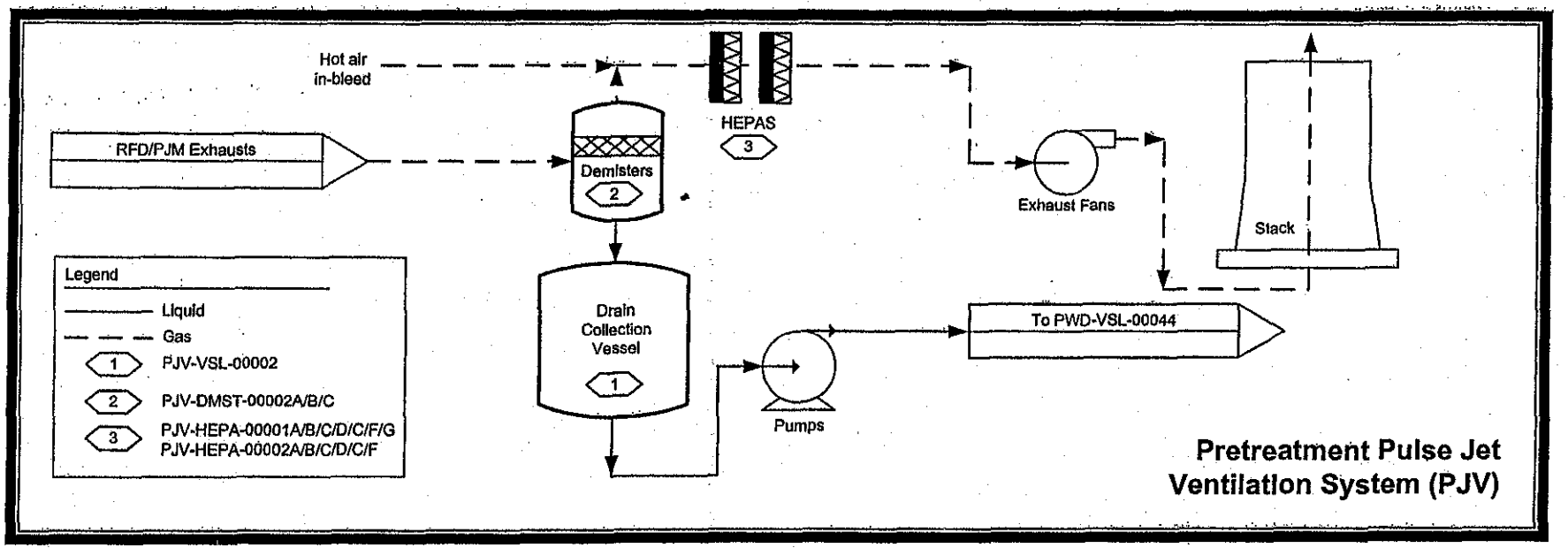

Figure 4A-129 Simplified Process Flow Figure - Sodium Hydroxide Reagent System (SHR)

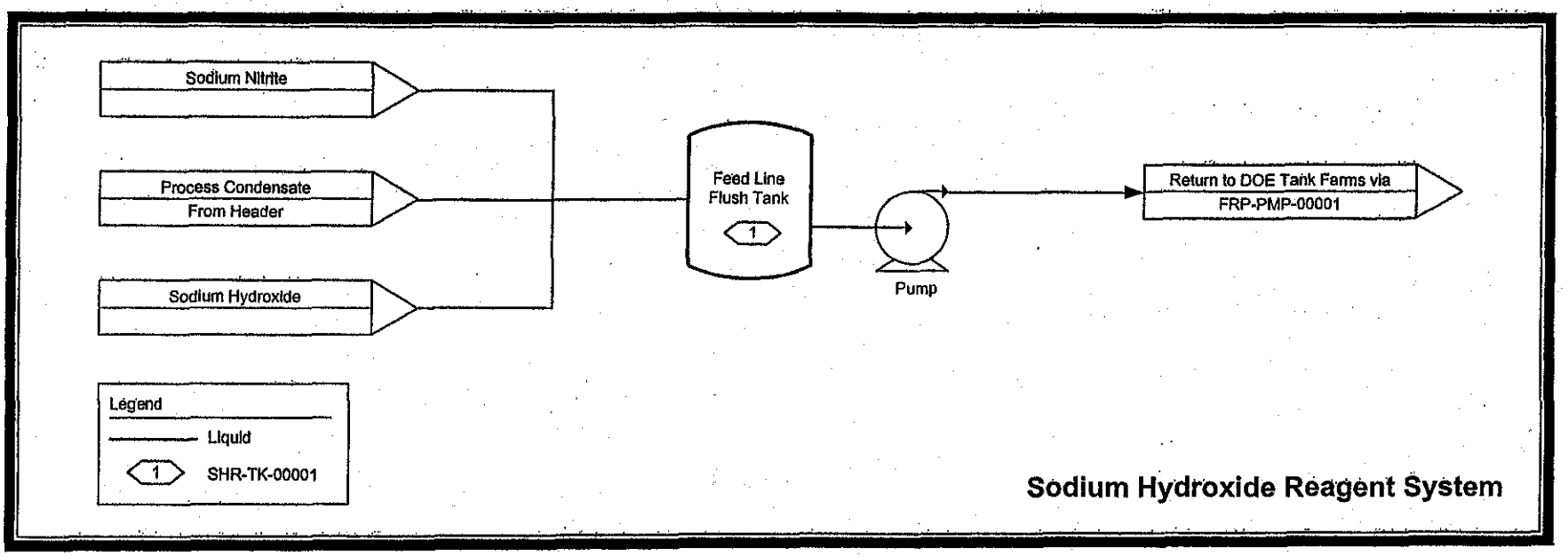

Appendix 6A
Inspection Schedules

APPENDIX 6A
INSPECTION SCHEDULES

Contents

1.0 Inspection Schedules 51-6A-1

Tables

Table 6A-1 Example of WTP General Inspection Schedule 51-6A-3

Table 6A-2 Example Container and Container Storage Area Inspection Schedules 51-6A-4

Table 6A-3 Example Tank Systems Inspection Schedule 51-6A-5

Table 6A-4 Example Cathodic Protection Inspection Schedule - Dangerous Waste Transfer Lines 51-6A-11

Table 6A-5 Example Ignitable or Reactive Wastes Inspection Schedule 51-6A-11

Table 6A-6 Example Miscellaneous Unit Inspection Schedule 51-6A-12

Table 6A-7 Example Containment Buildings Inspection Schedule 51-6A-12

INSPECTION SCHEDULES

This section provides example WTP inspection schedules showing inspection frequencies and what to look for. These example inspection schedules list the monitoring equipment, safety and emergency equipment, security devices, preparedness and prevention equipment, and operating and structural equipment that help prevent, detect, or respond to environmental or human health hazards related to mixed and dangerous waste. A copy of the current and complete inspection schedules will be retained at the WTP or other approved locations.

Table 6A-1 contains examples of the general inspection requirements. The remaining tables are organized by type of waste management unit. Following is a list of tables and their locations included in this Appendix.

1

Table 6A-1 Example WTP General Inspection Schedule

Component Name	Inspection	Frequency
Security Devices		
WTP inner fence	Check for damaged fencing	Monthly
Posted warning signs (see section 6.1.1.3) that say: "DANGER - UNAUTHORIZED PERSONNEL KEEP OUT" (or equivalent)	Verify signs are present, legible from a distance of 25 feet, and visible; ensure buildings or rooms containing dangerous or mixed waste are posted	Monthly
Points of access to active portions turnstiles, doors, and/or magnetic encoded bar readers	Verify operability	Monthly
Emergency Preparedness Equipment		
Safety showers and eyewash stations	Verify operability and sufficient pressure	Weekly
Automatic fire suppression system(s)	Verify operability	Annually
Portable fire extinguishers (all types)	Check for adequate charge	Monthly
Emergency lighting	Test operability	Monthly
Spill kit and spill control equipment	Verify contents complete	Quarterly
Emergency sirens and alarms	Verify operability	Monthly
Voice paging system (pagers or PA system)	Verify operability	Monthly
Crash alarm telephone system	Verify operability	Monthly
Emergency telephones	Verify operability	Monthly
Personal protective clothing and equipment	Ensure supplies meet ERP listing and requirements	Quarterly
Power Supply Inspections		
Emergency uninterruptible power supply system(s)	Verify operability	Annual
Emergency diesel generator	Perform no-load test and verify sufficient fuel	Annual

2

1

Table 6A-2 Example Container and Container Storage Area Inspection Schedules

Name	Inspection	Frequency
Dangerous and/or Mixed Waste Container Storage Areas		
• HLW Vit Plant ~~container~~ canister storage ~~area~~cave ~~Nos. 1, 2 & 3~~East corridor El. 0 ft², loading area, swabbing and monitoring area ~~□LAW Vit Plant container storage area~~ • Non-radioactive dangerous waste container storage area ~~□Central waste container storage area~~ ~~□HLW Out-of Service Melters~~ ~~□LAW Out-of Service Melters~~ • Failed melter storage facility • Laboratory waste ~~storage and waste export~~management area	Verify major risk labels present and legible, ensure all containers closed (except when waste is being added to container); Check that container storage areas are free of liquid and debris; Check for significant cracks, gaps, and other signs of deterioration of storage area floors; Verify minimum 30 inches of aisle space between containers rows; Ensure that any containers holding free liquids have portable secondary containment and no liquids accumulated in portable secondary containment	Weekly
Immobilized HLW and LAW Containers		
Empty LAW containers and HLW ~~(canisters)~~ for immobilized ~~LAW and HLW~~ waste~~)~~	Inspect container for liquid or debris inside, cracks, dents, bulges, gouges, or other abnormalities	Prior to filling
Filled IHLW canisters and ILAW containers ~~(canisters)~~	Inspect (by camera surveillance or cell window) each container for cracks, leaks, bulges, or other abnormalities	After sealing container
	Record in tracking system each container's location when placed in storage; Record in tracking system all container location changes if container(s) are moved while in storage; Verify container in recorded location when transporting container out of WTP storage	Within 48 hours of placing or moving each container
HLW ~~and LAW~~ Vitrification Plant's~~²~~ Container Storage Areas		
IHLW ~~and ILAW container~~canister storage areas (H-0132) ~~and LAW container buffer storage area (L-B025C/D)~~ ~~ILAW buffer container storage area~~	Visually check for liquid, foreign material, or debris in storage area; Check for deformities in storage area floors ~~Visually check (camera surveillance or other remote means) for damaged containers;~~ ~~Check for liquids, foreign materials or debris in storage area;~~ ~~Check for cracks and deformities in storage area~~	Weekly when facility is storing waste in immobilized waste container storage area ~~Weekly when facility is storing waste~~

2
3

1

Table 6A-3 Example Tank Systems Inspection Schedule

Component Name	Plant item number	Inspection	Frequency
Pretreatment Plant Tank System			
FRP			
Waste feed receipt vessels	~~V11020A, V11020B, V11020C, V11020D~~ FRP-VSL-00002A FRP-VSL-00002B FRP-VSL-00002C FRP-VSL-00002D	Inspect tank level monitoring data to prevent overflow	Daily
FEP			
Waste feed ~~E~~evaporator feed vessels	~~V11001A, V11001B~~ FEP-VSL-00017A FEP-VSL-00017B	Inspect tank level monitoring data to prevent overflow	Daily
~~Waste feed evaporator separator vessels~~ LAW feed evaporator ~~process~~ condensate ~~pot~~ vessel	~~V11002A, V11002B~~ ~~V11005~~ FEP-VSL-00005	~~Inspect tank level monitoring data to prevent overflow~~ Inspect tank level monitoring data to prevent overflow	~~Daily~~ Daily
HLP			
~~Strontium/transuranic lag storage vessels~~ HLW lag storage vessel	~~V12001A, V12001C,~~ HLP-VSL-00027A HLP-VSL-00027B	Inspect tank level monitoring data to prevent overflow	Daily
~~Lag storage vessels~~HLW feed receipt vessel	~~V12001D, V12001E~~ HLP-VSL-00022	Inspect tank level monitoring data to prevent overflow	Daily
HLW feed blending vessel	~~V12007~~ HLP-VSL-00028	Inspect tank level monitoring data to prevent overflow	Daily
UFP			
~~Evaporator concentrate buffer vessels~~Ultrafiltration feed preparation vessels	~~V12010A & V12010B~~ UFP-VSL-00001A UFP-VSL-00001B	Inspect tank level monitoring data to prevent overflow	Daily
Ultrafiltration feed vessels	~~V12011A & V12011B~~ UFP-VSL-00002A UFP-VSL-00002B	Inspect tank level monitoring data to prevent overflow	Daily
~~LAW permeate hold vessels~~ Ultrafilter permeate vessel	~~V12015A, V12015B, V12015C~~ UFP-VSL-00062A UFP-VSL-00062B UFP-VSL-00062C	Inspect tank level monitoring data to prevent overflow	Daily

Table 6A-3 Example Tank Systems Inspection Schedule

Component Name	Plant item number	Inspection	Frequency
Ultrafilters	~~G12002A, G12002B, G12003A, G12003B, G12004A, G12004B~~ UFP-FILT-00001A UFP-FILT-00001B UFP-FILT-00002A UFP-FILT-00002B UFP-FILT-00003A UFP-FILT-00003B	Inspect tank level monitoring data to prevent overflow	Daily
CXP			
~~LAW~~ Cesium ion exchange feed vessel	~~V13001~~ CXP-VSL-00001	Inspect tank level monitoring data to prevent overflow	Daily
Cesium ion exchange columns	~~C13001, C13002, C13003, C13004~~ CXP-IXC-00001 CXP-IXC-00002 CXP-IXC-00003 CXP-IXC-00004	Inspect column monitoring data to prevent release	Daily
Cesium reagent vessel	CXP-IXC-00005	Inspect tank level monitoring data to prevent overflow	Daily
Cesium ion exchange c~~C~~austic rinse collection vessel	~~V13008~~ CXP-VSL-00004	Inspect tank level monitoring data to prevent overflow	Daily
Cesium ion exchange treated LAW c~~C~~ollection v~~V~~essels	CXP-VSL-00026A CXP-VSL-00026B CXP-VSL-00026C	Inspect tank level monitoring data to prevent overflow	Daily
CNP			
Cesium evaporator eluate lute pot	CNP-VSL-00001	Inspect tank level monitoring data to prevent overflow	Daily
Cesium evaporator ~~R~~recovered nitric acid vessel	~~V13028~~ CNP-VSL-00004	Inspect tank level monitoring data to prevent overflow	Daily
Eluate contingency storage vessel	~~V13073~~ CNP-VSL-00003	Inspect tank level monitoring data to prevent overflow	Daily
PVP			
~~HEME drain collection vessels~~Vessel ventilation HEME drain collection vessel ~~Vessel vent header collection vessel~~	~~V15326 & V15327~~ PVP-VSL-00001 ~~PVP-VSL-00003~~	Inspect tank level monitoring data to prevent overflow ~~Inspect tank level monitoring data to prevent overflow~~	Daily ~~Daily~~

Table 6A-3 Example Tank Systems Inspection Schedule

Component Name	Plant item number	Inspection	Frequency
PJV			
PJV ~~Condensate~~ HEME drain collection vessel	~~V15038~~ PJV-VSL-00002	Inspect tank level monitoring data to prevent overflow	Daily
PWD			
Ultimate overflow vessel	~~V15009B~~ PWD-VSL-00033	Inspect tank level monitoring data to prevent overflow	Daily
Plant wash vessel	~~V15009A~~ PWD-VSL-00044	Inspect tank level monitoring data to prevent overflow	Daily
~~Acidic effluent vessel~~Acid/alkaline effluent vessel	~~V15013~~ PWD-VSL-00015	Inspect tank level monitoring data to prevent overflow	Daily
~~Contaminated effluent vessel~~ Acid/alkaline effluent vessel ~~HLW effluent transfer vessel~~	~~V15018~~ PWD-VSL-00016 ~~V12002~~	Inspect tank level monitoring data to prevent overflow ~~Inspect tank level monitoring data to prevent overflow~~	Daily ~~Daily~~
C3 floor drains ~~tank~~collection vessel	~~V15319~~ PWD-VSL-00046	Inspect tank level monitoring data to prevent overflow	Daily
HLW effluent transfer vessel	PWD-VSL-00043	Inspect tank level monitoring data to prevent overflow	Daily
TLP			
~~Evaporator separator vessel~~ ~~Process~~Treated LAW evaporator condensate ~~hold~~ vessel	~~V41011~~ ~~V41013~~ TEP-VSL-00002	~~Inspect tank level monitoring data to prevent overflow~~ Inspect tank level monitoring data to prevent overflow	~~Daily~~ Daily
~~Plant wash vessels~~LAW SBS condensate receipt vessel	~~V45009A & V45009B~~ TLP-VSL-00009A TLP-VSL-00009B	Inspect tank level monitoring data to prevent overflow	Daily
TCP			
Treated LAW ~~buffer~~ concentrate storage vessel	~~V41001~~ TCP-VSL-00001	Inspect tank level monitoring data to prevent overflow	Daily
RDP			
Spent resin ~~collection~~ slurry vessels ~~Resin flush collection~~	~~V43135A & V43135B~~ RDP-VSL-00002A RDP-VSL-00002B	Inspect tank level monitoring data to prevent overflow	Daily ~~Daily~~ ~~Daily~~

Table 6A-3 Example Tank Systems Inspection Schedule

Component Name	Plant item number	Inspection	Frequency
SHR			
Feed line flush tank	SHR-TK-00009	Inspect tank level monitoring data to prevent overflow	Daily
RLD			
Process condensate vessels	~~V45028A & V45028B~~ RDP-TK-00006A RDP-TK-00006B	Inspect tank level monitoring data to prevent overflow	Daily
~~Primary a~~Alkaline effluent vessels ~~Secondary Alkaline effluent vessel~~	~~V45013~~ RLD-VSL-00017A RLD-VSL-00017B ~~V45018~~	Inspect tank level monitoring data to prevent overflow ~~Inspect tank level monitoring data to prevent overflow~~	Daily ~~Daily~~
PIH			
Decontamination soak tank	PIH-TK-00001	Inspect tank level monitoring data to prevent overflow	Daily
LAW Vitrification Plant Tank System			
LCP			
Melter 1 concentrate receipt vessel	~~V21001~~ LCP-VSL-00001	Inspect tank level monitoring data to prevent overflow	Daily
Melter 2 concentrate receipt vessel ~~Melter 3 concentrate receipt vessel~~	~~V21002~~ LCP-VSL-00002 ~~V21003~~	Inspect tank level monitoring data to prevent overflow ~~Inspect tank level monitoring data to prevent overflow~~	Daily ~~Daily~~
LFP			
Melter 1 feed preparation vessel	~~V21101~~ LFP-VSL-00001	Inspect tank level monitoring data to prevent overflow	Daily
Melter 1 feed vessel	~~V21102~~ LFP-VSL-00002	Inspect tank level monitoring data to prevent overflow	Daily
Melter 2 feed preparation vessel	~~V21201~~ LFP-VSL-00003	Inspect tank level monitoring data to prevent overflow	Daily

Table 6A-3 Example Tank Systems Inspection Schedule

Component Name	Plant item number	Inspection	Frequency
Melter 2 feed vessel ~~Melter 3 feed preparation vessel~~ ~~Melter 3 feed vessel~~	~~V21202~~ LFP-VSL-00004 ~~V21301~~ ~~V21302~~	Inspect tank level monitoring data to prevent overflow ~~Inspect tank level monitoring data to prevent overflow~~ ~~Inspect tank level monitoring data to prevent overflow~~	Daily ~~Daily~~ ~~Daily~~
LVP			
LAW caustic ~~scrubber blowdown vessel~~collection tank	~~V22001~~ LVP-TK-00001	Inspect tank level monitoring data to prevent overflow	Daily
LOP			
Melter 1 SBS condensate vessel	~~V22101~~ LOP-VSL-00001	Inspect tank level monitoring data to prevent overflow	Daily
Melter 2 SBS condensate vessel ~~Melter 3 SBS condensate vessel~~	~~V22201~~ LOP-VSL-00002 ~~V22301~~	Inspect tank level monitoring data to prevent overflow ~~Inspect tank level monitoring data to prevent overflow~~	Daily ~~Daily~~
RLD			
Plant wash vessel	~~V25001~~ RLD-VSL-00003	Inspect tank level monitoring data to prevent overflow	Daily
~~LAW~~ C3/C5 ~~effluent~~ drains/sump collection vessel	~~V25002~~ RLD-VSL-00004	Inspect tank level monitoring data to prevent overflow	Daily
SBS condensate collection vessel	~~V25003~~ RLD-VSL-00005	Inspect tank level monitoring data to prevent overflow	Daily
HLW Vitrification Plant Tank System			
HCP			
Concentrate receipt vessel 1	~~V31001~~ HCP-VSL-00001	Inspect tank level monitoring data to prevent overflow	Daily
Concentrate receipt vessel 2	~~V31002~~ HCP-VSL-00002	Inspect tank level monitoring data to prevent overflow	Daily

Table 6A-3 Example Tank Systems Inspection Schedule

Component Name	Plant item number	Inspection	Frequency
HOP			
SBS condensate ~~collection~~ receiver vessel 1	~~V32101~~ HOP-VSL-00903	Inspect tank level monitoring data to prevent overflow	Daily
SBS condensate receiver vessel 2	HOP-VSL-00904	Inspect tank level monitoring data to prevent overflow	Daily
HDH			
Canister decon~~tamination~~ vessel	~~V33001~~ HDH-VSL-00002	Inspect tank level monitoring data to prevent overflow	Daily
Canister decon vessel	HDH-VSL-00004	Inspect tank level monitoring data to prevent overflow	Daily
Waste neutralization vessel	~~V33002~~ HDH-VSL-00003	Inspect tank level monitoring data to prevent overflow	Daily
Canister rinse bogie decon~~tamination~~ vessel	~~V33004~~ HDH-VSL-00001	Inspect tank level monitoring data to prevent overflow	Daily
RLD			
Acidic waste vessel	~~V35002~~ RLD-VSL-00007	Inspect tank level monitoring data to prevent overflow	Daily
Plant wash and drains vessel ~~Decontamination effluent collection vessel~~	~~V35003~~ RLD-VSL-00008 ~~V35009~~	Inspect tank level monitoring data to prevent overflow ~~Inspect tank level monitoring data to prevent overflow~~	Daily ~~Daily~~
Offgas drains collection vessel	~~V35038~~ RLD-VSL-00002	Inspect tank level monitoring data to prevent overflow	Daily
HFP			
~~Melter 1 Ff~~Feed preparation vessel	~~V31101~~ HFP-VSL-00001	Inspect tank level monitoring data to prevent overflow	Daily
~~Melter 2 f~~Feed preparation vessel	HFP-VSL-00005	Inspect tank level monitoring data to prevent overflow	Daily
HLW ~~HLW m~~Mmelter ~~1~~ feed vessel	~~V31102~~ HFP-VSL-00002	Inspect tank level monitoring data to prevent overflow	Daily

Table 6A-3 Example Tank Systems Inspection Schedule

Component Name	Plant item number	Inspection	Frequency
HLW ~~M~~melter ~~2~~-feed vessel	HFP-VSL-00006	Inspect tank level monitoring data to prevent overflow	Daily
HSH			
Decontamination ~~t~~Tank melter cave 1	HSH-TK-00001	Inspect tank level monitoring data to prevent overflow	Daily
Decontamination ~~T~~tank melter cave 2	HSH-TK-00002	Inspect tank level monitoring data to prevent overflow	Daily
Analytical Laboratory Tank System			
LAB			
Laboratory ~~liquid effluent~~area sink drain collection vessel~~s~~	~~V60001a & V60001B~~ RLD-VSL-00164	Inspect tank level monitoring data to prevent overflow	Daily
Hot cell drain collection vessel	RLD-VSL-00165	Inspect tank level monitoring data to prevent overflow	Daily
Plant Sumps as identified in Chapter 4: Leak Detection for Primary Containment			
Leak detectors located in secondary containment for all tank systems, container storage areas, miscellaneous units, and containment buildings managing dangerous and/or mixed waste	Monitor ~~cell~~ leak detection instrumentation or monitoring data to detect leaks	Daily	
Underground Piping (receiving from DST and transferring out)			
Leak detectors	Monitor ~~cell~~ leak detection instrumentation or monitoring data to detect leaks	Daily	

Table 6A-4 Example Cathodic Protection Inspection Schedule-Dangerous Waste Transfer Lines

Component Name and Line Number	Inspection	Frequency
Cathodic protection systems for dangerous and mixed waste transfer lines	Verify proper operation	• Initial (less than 6 months after installation) • Annually (from date of initial installation inspection, above)
All sources of impressed current supporting cathodically protected dangerous and mixed waste transfer lines	Test for proper function	Bi-monthly

Table 6A-5 Example Ignitable or Reactive Wastes Inspection Schedule

Component Name	Inspection	Frequency
Receipt tanks	Inspect, by qualified personnel or in the presence of fire marshal, for compliance with Uniform Fire Code and enter inspection into operating record	365 days
Containers and container storage areas storing ignitable or reactive waste	Inspect, by professional person or in the presence of fire marshal for compliance with Uniform Fire Code and enter inspection into operating record. Inspect containers and container storage areas for compliance with WAC 173-303-630(8) requirements.	365 days

~~Table 6A-6 Example Miscellaneous Unit Inspection Schedule~~
~~Component Name Inspection Frequency~~
~~□LAW & HLW Melters Visual inspection (via cave window or CCTV if provided) for damage, leaks, or abnormalities~~
~~Inspect melter level monitoring data to prevent overflow Daily~~

Table 6A-6 Example Miscellaneous Treatment Unit Inspection Schedule

Component Name	Plant Item Number	Inspection	Frequency
Pretreatment Facility Miscellaneous Treatment Unit Systems			
TLP			
Treated LAW eEvaporator sSeparator Vvessel	TLP-SEP-00001	Inspect vessel level monitoring data to prevent overflow	Daily
Reboiler	TLP-RBLR-00001	TBD	TBD
Primary cCondenser	TLP-COND-00001	TBD	TBD
Inter-condenser	TLP-COND-00003	TBD	TBD
After-condenser	TLP-COND-00002	TBD	TBD
HEPA fFilter	TLP-HEPA-00001	TBD	TBD
FEP			
Waste fFeed eEvaporator Sseparator vVessels	FEP-SEP-00001A FEP-SEP-00001B	TBD	TBD
Reboilers	FEP-RBLR-00001A FEP-RBLR-00001B	TBD	TBD
Primary cCondensers	FEP-COND-00001A FEP-COND-00001B	TBD	TBD
Inter-condensers	FEP-COND-00002A FEP-COND-00002B	TBD	TBD
After-condensers	FEP-COND-00003A FEP-COND-00003B	TBD	TBD
PJV			
HEPA Ffilters	PJV-HEPA-00003A PJV-HEPA-00003B	TBD	TBD
Primary HEPA fFilters	PJV-HEPA-00001A PJV-HEPA-00001B PJV-HEPA-00001C PJV-HEPA-00001D PJV-HEPA-00001E PJV-HEPA-00001F PJV-HEPA-00001G	TBD	TBD

Table 6A-6 Example Miscellaneous Treatment Unit Inspection Schedule

Component Name	Plant Item Number	Inspection	Frequency
Secondary HEPA ~~f~~Filters	PJV-HEPA-00001A PJV-HEPA-00001B PJV-HEPA-00001C PJV-HEPA-00001D PJV-HEPA-00001E PJV-HEPA-00001F PJV-HEPA-00001G	TBD	TBD
Electric h~~H~~eaters	PJV-HTR-00001A PJV-HTR-00001B	TBD	TBD
Air ~~l~~in-b~~B~~leed f~~F~~ilters	PJV-FILT-00001A PJV-FILT-00001B	TBD	TBD
Exhaust f~~F~~ans	PJV-FAN-00001A PJV-FAN-00001B PJV-FAN-00001C	TBD	TBD
Demisters	PJV-DMST-00002A PJV-DMST-00002B PJV-DMST-00002C	TBD	TBD
PVP			
Electric ~~H~~heaters	PVP-HTR-00001A PVP-HTR-00001B PVP-HTR-00001C	TBD	TBD
After-cooler	PVP-CLR-00001	TBD	TBD
Carbon b~~B~~ed a~~A~~dsorbers	PVP-ABS-00001A PVP-ABS-00001B	TBD	TBD
VOC ~~O~~oxidizer ~~U~~unit	PVP-OXID-00001	TBD	TBD
~~Vessel vVent aA~~Adsorber ~~O~~outlet f~~F~~ilters	PVP-FILT-00001A PVP-FILT-00001B	TBD	TBD
HEME f~~F~~ilters	PVP-HEME-00001A PVP-HEME-00001B PVP-HEME-00001C	TBD	TBD
HEPA f~~F~~ilters	PVP-HEPA-00001A PVP-HEPA-00001B PVP-HEPA-00001C PVP-HEPA-00023 PVP-HEPA-00024 PVP-HEPA-00028 PVP-HEPA-00029 PVP-HEPA-00030 PVP-HEPA-00031 PVP-HEPA-00032 PVP-HEPA-00033 PVP-HEPA-00034 PVP-HEPA-00035	TBD	TBD

Table 6A-6 Example Miscellaneous Treatment Unit Inspection Schedule

Component Name	Plant Item Number	Inspection	Frequency
Caustic s~~S~~crubber	PVP-SCB-00002	TBD	TBD
PVV			
HEPA ~~F~~filters	PVV-HEPA-00002A PVV-HEPA-00002B PVV-HEPA-00002C	TBD	TBD
Exhaust ~~F~~fans	PVV-FAN-00001A PVV-FAN-00001B	TBD	TBD
CNP			
~~Cesium e~~~~Evaporators~~Separator Vessel	CNP-EVAP-00001	TBD	TBD
Cesium e~~E~~vaporator c~~C~~oncentrate r~~R~~eboiler	CNP-HX-00001	TBD	TBD
Cesium ~~N~~nitric a~~A~~cid ~~R~~rectifier c~~C~~olumn	CNP-DISTC-00001	TBD	TBD
Cesium e~~E~~vaporator ~~P~~primary c~~C~~ondenser	CNP-HX-00002	TBD	TBD
Cesium e~~E~~vaporator ~~S~~secondary c~~C~~ondenser	CNP-HX-00003	TBD	TBD
Cesium e~~E~~vaporator a~~A~~fter-c~~C~~ondenser	CNP-HX-00004	TBD	TBD
HEPA f~~F~~ilter	CNP-HEPA-00006	TBD	TBD
LAW Vitrification Plant Miscellaneous Treatment Unit Subsystems			
LMP			
LAW ~~M~~melters	LMP-MLTR-00001 LMP-MLTR-00002	• Visual inspection (via cave window or CCTV if provided) for damage, leaks, or abnormalities • Inspect melter level monitoring data to prevent overflow	Daily
LOP			
Melter 1 and melter 2 ~~S~~submerged b~~B~~ed s~~S~~crubbers	LOP-SCB-00001 LOP-SCB-00002	TBD	TBD
Melter 1 and melter 2 ~~W~~wet e~~E~~lectrostatic ~~P~~precipitators	LOP-WESP-00001 LOP-WESP-00002	TBD	TBD

Table 6A-6 Example Miscellaneous Treatment Unit Inspection Schedule

Component Name	Plant Item Number	Inspection	Frequency
Primary/Ssecondary Ffilm Ccoolers	LOP-FCLR-00001 LOP-FCLR-00002 LOP-FCLR-00003 LOP-FCLR-00004 ~~LOP-FCLR-00005~~ ~~LOP-FCLR-00006~~ ~~LOP-FCLR-00007~~	TBD	TBD
LVP			
Caustic sScrubber	LVP-SCB-00001A ~~LVP-SCB-00001B~~	TBD	TBD
HEPA fFilters	LVP-HEPA-00001A LVP-HEPA-00001B LVP-HEPA-00002A LVP-HEPA-00002B	TBD	TBD
Selective cCatalytic Ooxidizer	LVP-SCO-00001	TBD	TBD
Selective cCatalytic rReduction Uunits	LVP-SCR-00001 LVP-SCR-00002	TBD	TBD
Electric Hheaters	LVP-HTR-00001A LVP-HTR-00001B LVP-HTR-00002 LVP-HTR-00003A LVP-HTR-00003B	TBD	TBD
Heat eExchangers	LVP-HX-00001	TBD	TBD
LAW sStack		TBD	TBD
Adsorber	LVP-ADBR-00001 ~~LVP-ADBR-00002~~	TBD	TBD
Exhausters	LVP-EXHR-00001A LVP-EXHR-00001B LVP-EXHR-00001C	TBD	TBD
HLW Vitrification Plant Miscellaneous Treatment Unit Subsystems			
HMP			
HLW Mmelters	HMP-MLTR-00001 HMP-MLTR-00002	• Visual inspection (via cave window or CCTV if provided) for damage, leaks, or abnormalities • Inspect melter level monitoring data to prevent overflow	Daily

Table 6A-6 Example Miscellaneous Treatment Unit Inspection Schedule

Component Name	Plant Item Number	Inspection	Frequency
HOP			
Submerged b~~B~~ed s~~S~~crubber	HOP-SCB-00001 HOP-SCB-00002	TBD	TBD
Wet e~~E~~lectrostatic ~~P~~precipitators	HOP-WESP-00001 HOP-WESP-00002	TBD	TBD
Air e~~E~~jector ~~I~~induced s~~S~~iphon	Located on HOP-SCB-00001 and HOP-SCB-00002	TBD	TBD
Offgas ~~O~~organic ~~O~~oxidizers	HOP-SCO-00001 HOP-SCO-00004	TBD	TBD
NOx s~~S~~elective c~~C~~atalytic r~~R~~educers	HOP-SCR-00001 HOP-SCR-00002	TBD	TBD
Silver ~~M~~mordenite c~~C~~olumns	HOP-ABS-00002 HOP-ABS-00003	TBD	TBD
HEPA ~~F~~filters	HOP-HEPA-00001A HOP-HEPA-00001B HOP-HEPA-00002A HOP-HEPA-00002B HOP-HEPA-00007A HOP-HEPA-00007B HOP-HEPA-00008A HOP-HEPA-00008B	TBD	TBD
Film c~~C~~oolers	HOP-FCLR-00001 HOP-FCLR-00002	TBD	TBD
~~Catalyst sSkid Ppreheaters~~Heat exchangers	HOP-HX-00001 HOP-HX-00002 HOP-HX-00003 HOP-HX-00004	TBD	TBD
Catalyst s~~S~~kid ~~E~~lectric ~~H~~heaters	~~HOP-HTR-00001~~ HOP-HTR-00001B HOP-HTR-00002A ~~HOP-HRT-00003~~ HOP-HTR-00005A HOP-HTR-00005B	TBD	TBD

Table 6A-6 Example Miscellaneous Treatment Unit Inspection Schedule

Component Name	Plant Item Number	Inspection	Frequency
~~Booster e~~E~~E~~xtraction f~~F~~ans	HOP-FAN-00001A HOP-FAN-00001B HOP-FAN-00001C HOP-FAN-00008A HOP-FAN-00008B HOP-FAN-00008C HOP-FAN-00009A HOP-FAN-00009B HOP-FAN-00009C HOP-FAN-00010A HOP-FAN-00010B HOP-FAN-00010C	TBD	TBD
HLW s~~S~~tack		TBD	TBD
Activated c~~C~~arbon c~~C~~olumn	HOP-ADBR-00001A HOP-ADBR-000~~0~~21B HOP-ADBR-00002A HOP-ADBR-00002B	TBD	TBD
High ~~E~~efficiency ~~M~~mist e~~E~~liminators	HOP-~~H~~EME-00001A HOP-~~H~~EME-00001B HOP-~~H~~EME-00002A HOP-~~H~~EME-00002B	TBD	TBD
PJV			
HEPA f~~F~~ilters	PJV-HEPA-00004A PJV-HEPA-00004B PJV-HEPA-00005A PJV-HEPA-00005B	TBD	TBD
Electric ~~H~~heater	PJV-HTR-00002	TBD	TBD
Pulse ~~J~~jet f~~F~~ans	~~HOP-HEME-00002A~~PJV-FAN-00002A ~~HOP-HEME-00002~~PJV-FAN-00002B	TBD	TBD

Table 6A-7 Example Containment Buildings Inspection Schedule

Component Name	Inspection	Frequency
• Containment building areas as designated in Chapter 4	~~Visual of area surrounding containment building to detect signs of releases of hazardous waste~~ • ~~Primary barrier in low or no radiation zones - look for significant cracks, gaps, corrosion or other signs of deterioration, look for liquid on floor.~~Inspect and record in the operating record data gathered from monitoring equipment and leak detection equipment as well as the containment building and the area immediately surrounding the containment building to detect signs of releases of dangerous waste~~.~~ • High radiation areas - check differential pressure monitoring records to ensure negative pressure in containment building area	Weekly

Attachment 51 – Appendix 2.0
Critical Systems for the WTP

Any procedure, method, data, or information contained in this document that relates solely to radionuclides or to the radioactive source, byproduct material, and/or special nuclear components of mixed waste (as defined by the Atomic Energy Act of 1954, as amended) is not provided for the purpose of regulating the radiation hazards of such components under the authority of this permit and Chapter 70.105 RCW.

Mnemonic System Locator	System Name
Pretreatment Systems	
PFH	Pretreatment Filter Cave Handling System
PJV	Pulse Jet Ventilation System
FRP	Waste Feed Receipt Process System
FEP	Waste Feed Evaporation Process System
TLP	Treated LAW Evaporation Process System
TCP	Treated LAW Concentrate Storage Process System
HLP	HLW Lag Storage and Feed Blending Process System
UFP	Ultrafiltration Process System
CXP	Cesium Ion Exchange Process System
CNP	Cesium Nitric Acid Recovery Process System
~~TXP~~	~~Technetium Ion Exchange Process System~~
~~TEP~~	~~Technetium Eluant Recovery Process System~~
RDP	Spent Resin Collection and Dewatering Process System
PIH	Pretreatment In-Cell Handling System
RWH	Radioactive Solid Waste Handling System
RLD	Radioactive Liquid Waste Disposal System
PVP	Pretreatment Vessel Vent Process System
PWD	Plant Wash and Disposal System
PVV	Process Vessel Vent System
Low-Activity Waste Systems	
RWH	Radioactive Solid Waste Handling System
RLD	Radioactive Liquid Waste Disposal System
LCP	LAW Concentrate Receipt Process System
LFP	LAW Melter Feed Process System
LMP	LAW Melter Process System
LOP	LAW Primary Offgas Process System

Mnemonic System Locator	System Name
LVP	LAW Secondary Offgas/Vessel Vent Process System
LSH	LAW Melter Equipment Support Handling System
LPH	LAW Container Pour Handling System
LFH	LAW Container Finishing Handling System
High-Level Waste Systems	
PJV	Pulse-Jet Ventilation System
HCP	HLW ~~Cave~~ Concentrate Receipt Process System
HFP	HLW Melter Feed Process System
HMP	HLW Melter Process System
HOP	Melter Offgas Treatment Process System
HSH	HLW Melter Cave Support Handling System
HFH	HLW Filter Cave Handling System
HPH	HLW Canister Pour Handling System
HDH	HLW Canister Decontamination Handling System
HMH	HLW Melter Handling System
PVV	Process Vessel Vent System
RWH	Radioactive Solid Waste Handling System
RLD	Radioactive Liquid Waste Disposal System
Balance of Facilities Systems	
RWH	Radioactive Solid Waste Handling System
RLD	Radioactive Liquid Waste Disposal System
Analytical Laboratory Systems	
RWH	Radioactive Solid Waste Handling System
RLD	Radioactive Liquid Waste Disposal System

Attachment 3
Replacement Sections

1. Part A Form 3, located in Chapter 1
2. Topographic Map, located in Chapter 2
3. Process Information, located in Chapter 4 and Appendix 4A
4. Inspection Schedules, located in Appendix 6A
5. List of Critical Systems, located in Appendix 2.0

Chapter 1.0

Part A Permit Application, Revision 2 (February 2004)

CHAPTER 1.0
PART A PERMIT APPLICATION, REVISION 2 (February 2004)

Contents

1.0 Introduction **51-1-1**

Part A, Dangerous Waste Permit Form 1 Revision 1, for the Hanford Tank Waste Treatment and Immobilization Plant **51-1-2**

Part A, Dangerous Waste Permit Form 3 Revision 2, for the Hanford Tank Waste Treatment and Immobilization Plant **51-1-6**

1.0 INTRODUCTION

PART A

The Part A, Dangerous Waste Permit (DWP) Form 1, for the Hanford Tank Waste Treatment and Immobilization Plant (WTP) is included in the following pages. The form includes a figure showing the location of the WTP on the Hanford Site.

The Part A, Form 3, for the WTP is included immediately after Form 1.

- In December 2001, the original Hanford Facility Dangerous Waste Permit Part A Permit Application (Part A) Form 1, Revision 1, and Form 3, Revision 3, were submitted to the Washington Department of Ecology

- The February 2004 Part A Form 3, Revision 2 updates Section IV, Description of Dangerous Wastes; Section V, Facility Drawing; and Section VI, Photograph.

Revision 2

FORM 3	Dangerous Waste Permit Application	1. EPA/State I.D. No. W A 7 8 9 0 0 0 8 9 6 7

FOR OFFICIAL USE ONLY

Application Approved	Date Received (month/day/year)	Comments

II. FIRST OR REVISED APPLICATION

Place an "X" in the appropriate box in A or B below (mark one box only) to indicate whether this is the first application you are submitting for your facility or a revised application. If this is your first application and you already know your facility's EPA/STATE I.D. Number, or if this is a revised application, enter your facility's EPA/STATE I.D. Number in Section 1 below.

A. First Application (place an "X" below and provide the appropriate date)

☒ 1. **Existing Facility** (see instructions for definition of "existing" facility. Complete item below.)

MO	DAY	YR
0 3	2 2	1 9 4 3

For existing facilities, provide the date (mo/day/yr) operation began or the date construction commenced. (Use the boxes to the left.)

☐ 2. **New Facility** (complete item below.)

MO	DAY	YR

For new facilities, provide the date (mo/day/yr) operation began or is expected to begin.

B. Revised Application (place an "X" below and complete Section 1 above.)

☒ 1. **Facility has an Interim Status Permit**

☒ 2. **Facility has a Final Permit**

III. PROCESSES - CODES AND DESIGN CAPACITIES

A. Process Code - Enter the code from the list of process codes below that best describes each process to be used at the facility. Ten lines are provided for entering codes. If more lines are needed, enter the code(s) in the space provided. If a process will be used that is not included in the list of codes below, then describe the process (including its design capacity) in the space provided on the (Section III-C).

B. Process Design Capacity - for each code entered in column A, enter the capacity of the process.
1. Amount - Enter the amount.
2. Unit of Measures - For each amount entered in column B (1), enter the code from the list of unit measures codes below that describes the unit of measured used. Only the units of measure that are listed below should be used.

PROCESS	PROCESS CODE	APPROPRIATE UNITS OF MEASURE FOR PROCESS DESIGN CAPACITY
Storage:		
Container (barrel, drum, etc.)	S01	Gallons or liters
Tank	S02	Gallons or liters
Waste Pile	S03	Cubic yards or cubic meters
Surface Impoundment	S04	Gallons or liters
Disposal:		
Injection Well	D80	Gallons or liters
Landfill	D81	Acre-feet (the volume that would cover one acre to a depth of one foot) or hectare-meter
Land Application	D82	Acres or hectares
Ocean Disposal	D83	Gallons per day or liters per day
Surface Impoundment	D84	Gallons or liters
Treatment:		
Tank	T01	Gallons per day or liters per day
Surface Impoundment	T02	Gallons per day or liters per day
Incinerator	T03	Tons per hour or metric tons per hour; gallons per hour or liters per hour
Other (Use for physical, chemical, thermal or biological treatment processes not occurring in tanks, surface impoundments or incinerators. Describe the processes in the space provided; Section III-C)	T04	Gallons per day or liters per day

Units of Measure	Unit of Measure Code	Units of Measure	Unit of Measure Code	Units of Measure	Unit of Measure Code
Gallons	G	Liters Per Day	V	Acre-Feet	A
Liters	L	Tons Per Hour	D	Hectare-Meter	F
Cubic Yards	Y	Metric Tons Per Hour	W	Acres	B
Cubic Meters	C	Gallons Per Day	E	Hectares	Q
Gallons Per Day	U	Liters Per Hour	H		

ECY 030-31 Form 3 (Rev. 7/00)

Page 1

1

Revision 2

III. PROCESSES – CODES AND DESIGN CAPACITIES (continued)

Example for Completing Section III (shown in line numbers X-1 and X-2 below): A facility has two storage tanks, one tank can hold 200 gallons and the other can hold 400 gallons. The facility also has an incinerator that can burn up to 20 gallons per hour.

Line No.	A. Process Code (*from list above*)			B. Process Design Capacity 1. Amount (specify)	2. Unit of Measure (*enter code*)	For Official Use Only			
X-1	*S*	*0*	*2*	*600*	*G*				
X-2	*T*	*0*	*3*	*20*	*E*				
1	S	0	1	1,300,000	G				
2	S	0	2	5,700,000	G				
3	T	0	1	57,000	U				
4	T	0	4	Vit 16,000	U				
5	T	0	5	Containment Bldg. 19,000	U				
6	S	0	6	Containment Bldg. 170,000	U				
7									
8									
9									
10									

C. Space for Additional process codes or for describing other process (code "T04"). For each process entered here include design capacity.

Line No. 4 - T04 = Treatment in miscellaneous units by vitrification.

Line No. 5 - T05 = Treatment in miscellaneous units, in containment buildings for vitrified waste and secondary waste.

Line No. 6 - S06 = Storage in miscellaneous units, in containment buildings for secondary waste.

IV. DESCRIPTION OF DANGEROUS WASTES

A. **Dangerous Waste Number** - Enter the digit number from Chapter 173-303 WAC for each listed dangerous waste you will handle.
If you handle dangerous wastes which are not listed in Chapter 173-303 WAC, enter the four-digit number(s) that describes the characteristics and/or the toxic contaminants of those dangerous wastes.

B. **Estimated Annual Quantity** - For each listed waste entered in Column A, estimate the quantity of that waste that will be handled on an annual basis. For each characteristic or toxic contaminant entered in column A, estimate the total annual quantity of all the non-listed waste(s) that will be handled which possess that characteristic or contaminant.

ECY 030-31 Form 3 (Rev. 7/00) Page 2

1

Revision 2

IV. DESCRIPTION OF DANGEROUS WASTES *(continued)*

C. Unit of Measure - For each quantity entered in column B, enter the unit of measure code. Units of measure which must be used and the appropriate codes are:

ENGLISH UNIT OF MEASURE	CODE	METRIC UNIT OF MEASURE	CODE
Pounds	P	Kilograms	K
Tone	T	Metric Tons	M

If facility records use any other unit of measure for quantity, the units of measure must be converted into one of the required units of measure taking into account the appropriate density or specific gravity of the waste.

D. PROCESSES

1 Process Codes:

For listed dangerous waste: For each listed dangerous waste entered in column A, select the code(s) from the list of process codes contained in Section III to indicate how the waste will be stored, treated, and/or disposed of at the facility.

For non-listed dangerous waste: For each characteristic or toxic contaminant entered in column A, select the code(s) from the list of process codes contained in Section III to indicate all the processes that will be used to store, treat, and/or dispose of all the non-listed dangerous wastes that possess that characteristic or toxic contaminant.

Note: Four spaces are provided for entering process codes. If more are needed: (1) Enter the first three as described above; (2) Enter "000" in the extreme right box of Item IV-D (1); and (3) Enter in the space provided on page 4, the line number and the additional code(s).

2 Process Description: If a code is not listed for a process that will be used, describe the process in the space provided on the form.

Note: Dangerous wastes described by more than one dangerous waste number - Dangerous wastes that can be described by more than one Waste Number shall be described on the form as follows:

1 Select one of the Dangerous Waste Numbers and enter it in column A. On the same line complete columns B, C, and D by estimating the total annual quantity of the waste and describing all the processes to be used to treat, store, and/or dispose of the waste.

2 In column A of the next line, enter the other Dangerous Waste Number that can be used to describe the waste. In column D (2) on that line, enter "included with above" and make no other entries on that line.

3 Repeat step 2 for each other Dangerous Waste Number that can be used to describe the dangerous waste.

Example for completing Section IV (shown in line numbers X-1, X-2, X-3, and X-4 below) - A facility will treat and dispose of an estimated 900 pounds per year of chrome shavings from leather tanning and finishing operation. In addition, the facility will treat and dispose of three non-listed wastes. Two wastes are corrosive only and there will be an estimated 200 pounds per year of each waste. The other waste is corrosive and ignitable and there will be an estimated 100 pounds per year of that waste. Treatment will be in an incinerator and disposal will be in a landfill.

Line No.	A. Dangerous Waste No. *(enter code)*				B. Estimated Annual Quantity of Waste	C. Unit of Measure *(enter code)*			D. Processes 1. Process Codes *(enter)*				D. Processes 2. Process Description *(if a code is not entered in D(1))*
X-1	*K*	*0*	*5*	*4*	*900*		*P*		*T03*	*D80*			
X-2	*D*	*0*	*0*	*2*	*400*		*P*		*T03*	*D80*			
X-3	*D*	*0*	*0*	*1*	*100*		*P*		*T03*	*D80*			
X-4	*D*	*0*	*0*	*2*					*T03*	*D80*			*included with above*

ECY 030-31 Form 3 (Rev. 7/00)

Page 3

1

Revision 2

Photocopy this page before completing if you have more than 26 wastes to list.

ID Number (enter from page 1)
WA789000896 7

IV. DESCRIPTION OF DANGEROUS WASTES *(continued)*

Line No.	A. Dangerous Waste No. *(enter code)*	B. Estimated Annual Quantity of Waste	C. Unit of Measure *(enter code)*			D. Processes 1. Process Codes *(enter)*				D. Processes 2. Process Description *(if a code is not entered in D(1))*
1	D001	100,000	T			S02				
2	D003					S02				Included with above
3	D002					T01	S02			Included with above
4	D004					T01	S02			Included with above
5	D005					T01	S02			Included with above
6	D006					T01	S02			Included with above
7	D007					T01	S02			Included with above
8	D008					T01	S02			Included with above
9	D009					T01	S02			Included with above
10	D010					T01	S02			Included with above
11	D011					T01	S02			Included with above
12	D018					T01	S02			Included with above
13	D019					T01	S02			Included with above
14	D022					T01	S02			Included with above
15	D028					T01	S02			Included with above
16	D029					T01	S02			Included with above
17	D030					T01	S02			Included with above
18	D033					T01	S02			Included with above
19	D034					T01	S02			Included with above
20	D035					T01	S02			Included with above
21	D036					T01	S02			Included with above
22	D038					T01	S02			Included with above
23	D039					T01	S02			Included with above
24	D040					T01	S02			Included with above
25	D041					T01	S02			Included with above
26	D043					T01	S02			Included with above

ECY 030-31 Form 3 (Rev. 7/00) Page 4A

1

Revision 2

Photocopy this page before completing if you have more than 26 wastes to list.

ID Number (enter from page 1)

W	A	7	8	9	0	0	0	8	9	6	7

IV. DESCRIPTION OF DANGEROUS WASTES *(continued)*

Line No.	A. Dangerous Waste No. *(enter code)*	B. Estimated Annual Quantity of Waste	C. Unit of Measure *(enter code)*			D. Processes 1. Process Codes *(enter)*				D. Processes 2. Process Description *(if a code is not entered in D(1))*
1	WT01					T01	S02			Included with above
2	WT02					T01	S02			Included with above
3	WP01					T01	S02			Included with above
4	WP02					T01	S02			Included with above
5	F001					T01	S02			Included with above
6	F002					T01	S02			Included with above
7	F003					T01	S02			Included with above
8	F004					T01	S02			Included with above
9	F005					T01	S02			Included with above
10	F039[a]					T01	S02			Included with above
11										
12										
13										
14										
15										
16										
17										
18										
19										
20										
21										
22										
23										
24										
25										
26										

ECY 030-31 Form 3 (Rev. 7/00)

Page 4B

1

Revision 2

Photocopy this page before completing if you have more than 26 wastes to list.

ID Number (enter from page 1)
WA 789000896 7

IV. DESCRIPTION OF DANGEROUS WASTES *(continued)*

Line No.	A. Dangerous Waste No. *(enter code)*	B. Estimated Annual Quantity of Waste	C. Unit of Measure *(enter code)*			D. Processes 1. Process Codes *(enter)*				D. Processes 2. Process Description *(if a code is not entered in D(1))*
1	D002	55,000	T			T04	S01			Vitrification treatment process and storage of ILAW and IHLW
2	D004					T04	S01			Included with above
3	D005					T04	S01			Included with above
4	D006					T04	S01			Included with above
5	D007					T04	S01			Included with above
6	D008					T04	S01			Included with above
7	D009					T04	S01			Included with above
8	D010					T04	S01			Included with above
9	D011					T04	S01			Included with above
10	D018					T04	S01			Included with above
11	D019					T04	S01			Included with above
12	D022					T04	S01			Included with above
13	D028					T04	S01			Included with above
14	D029					T04	S01			Included with above
15	D030					T04	S01			Included with above
16	D033					T04	S01			Included with above
17	D034					T04	S01			Included with above
18	D035					T04	S01			Included with above
19	D036					T04	S01			Included with above
20	D038					T04	S01			Included with above
21	D039					T04	S01			Included with above
22	D040					T04	S01			Included with above
23	D041					T04	S01			Included with above
24	D043					T04	S01			Included with above
25	WT01					T04	S01			Included with above
26	WT02					T04	S01			Included with above

ECY 030-31 Form 3 (Rev. 7/00)

Page 4C

1

Revision 2

Photocopy this page before completing if you have more than 26 wastes to list.

ID Number (enter from page 1)
W A 7 8 9 0 0 0 8 9 6 7

IV. DESCRIPTION OF DANGEROUS WASTES *(continued)*

Line No.	A. Dangerous Waste No. *(enter code)*	B. Estimated Annual Quantity of Waste	C. Unit of Measure *(enter code)*			D. Processes 1. Process Codes *(enter)*				D. Processes 2. Process Description *(if a code is not entered in D(1))*
1	WP01					T04	S01			Included with above
2	WP02					T04	S01			Included with above
3	F001					T04	S01			Included with above
4	F002					T04	S01			Included with above
5	F003					T04	S01			Included with above
6	F004					T04	S01			Included with above
7	F005					T04	S01			Included with above
8	F039*					T04	S02			Included with above
9										
10										
11										
12										
13										
14										
15										
16										
17										
18										
19										
20										
21										
22										
23										
24										
25										
26										

1

Revision 2

Photocopy this page before completing if you have more than 26 wastes to list.

ID Number (enter from page 1)

W	A	7	8	9	0	0	0	8	9	6	7

IV. DESCRIPTION OF DANGEROUS WASTES *(continued)*

Line No.	A. Dangerous Waste No. *(enter code)*	B. Estimated Annual Quantity of Waste	C. Unit of Measure *(enter code)*			D. Processes 1. Process Codes *(enter)*				D. Processes 2. Process Description *(if a code is not entered in D(1))*
1	D002	4,500	T			T05	S01	S06		Treatment and storage in containment buildings
2	D004					T05	S01	S06		Included with above
3	D005					T05	S01	S06		Included with above
4	D006					T05	S01	S06		Included with above
5	D007					T05	S01	S06		Included with above
6	D008					T05	S01	S06		Included with above
7	D009					T05	S01	S06		Included with above
8	D010					T05	S01	S06		Included with above
9	D011					T05	S01	S06		Included with above
10	D018					T05	S01	S06		Included with above
11	D019					T05	S01	S06		Included with above
12	D022					T05	S01	S06		Included with above
13	D028					T05	S01	S06		Included with above
14	D029					T05	S01	S06		Included with above
15	D030					T05	S01	S06		Included with above
16	D033					T05	S01	S06		Included with above
17	D034					T05	S01	S06		Included with above
18	D035					T05	S01	S06		Included with above
19	D036					T05	S01	S06		Included with above
20	D038					T05	S01	S06		Included with above
21	D039					T05	S01	S06		Included with above
22	D040					T05	S01	S06		Included with above
23	D041					T05	S01	S06		Included with above
24	D043					T05	S01	S06		Included with above
25	WT01					T05	S01	S06		Included with above
26	WT02					T05	S01	S06		Included with above

ECY 030-31 Form 3 (Rev. 7/00)

Page 4E

1

Revision 2

Photocopy this page before completing if you have more than 26 wastes to list.

ID Number (enter from page 1)

W	A	7	8	9	0	0	0	8	9	6	7

IV. DESCRIPTION OF DANGEROUS WASTES *(continued)*

Line No.	A. Dangerous Waste No. *(enter code)*	B. Estimated Annual Quantity of Waste	C. Unit of Measure *(enter code)*	D. Processes 1. Process Codes *(enter)*				2. Process Description *(if a code is not entered in D(1))*
1	WP01			T05	S01	S06		Included with above
2	WP02			T05	S01	S06		Included with above
3	F001			T05	S01	S06		Included with above
4	F002			T05	S01	S06		Included with above
5	F003			T05	S01	S06		Included with above
6	F004			T05	S01	S06		Included with above
7	F005			T05	S01	S06		Included with above
8	F039[a]			T05	S01	S06		Included with above
9								
10								
11								
12								
13								
14								
15								
16								
17								
18								
19								
20								
21								
22								
23								
24								
25								
26								

Revision 2

IV. DESCRIPTION OF DANGEROUS WASTES *(continued)*

E. Use this space to list additional process codes from Section D(1)

a. F039 is a multisource leachate included as a waste derived from non-specific source wastes F001 through F005.

V. FACILITY DRAWING

See facility drawing, including all existing facilities, on page 6.

VI. PHOTOGRAPHS

See facility photograph on page 7

VII. FACILITY GEOGRAPHIC LOCATION

This information is provided on the attached facility drawing and photograph.

LATITUDE (degrees, minutes, & seconds)	LONGITUDE (degrees, minutes, & seconds)

VIII. FACILITY OWNER

[X] A. If the facility owner is also the facility operator as listed in Section VII on Form 1, "General Information," place an "X" in the box to the left and skip to section IX below.

B. If the facility owner is not the facility operator as listed in Section VII on Form 1, complete the following:

1. Name of Facility's Legal Owner	B. Phone Number *(area code & no.)*
See Form 1 page	

3. Street or P.O. Box	4. City or Town	5. State	6. Zip Code

IX. OWNER CERTIFICATION

I certify under penalty of law that I have personally examined and am familiar with the information submitted in this and all attached documents, and that based on my inquiry of those individuals immediately responsible for obtaining the information, I believe that the submitted information is true, accurate, and complete. I am aware that there are significant penalties for submitting false information, including the possibility of fine and imprisonment.

Name (print or type)	Signature	Date Signed
See attached certification		

X. OPERATOR CERTIFICATION

I certify under penalty of law that I have personally examined and am familiar with the information submitted in this and all attached documents, and that based on my inquiry of those individuals immediately responsible for obtaining the information, I believe that the submitted information is true, accurate, and complete. I am aware that there are significant penalties for submitting false information, including the possibility of fine and imprisonment.

Name (print or type)	Signature	Date Signed
See attached certification		

This information is exempt from public inspection and copying.

OFFICIAL USE ONLY

This information is exempt from public inspection and copying.

This information is exempt from public inspection and copying.

OFFICIAL USE ONLY

This information is exempt from public inspection and copying.

Revision 2

Part A Form 3 Certification

IX AND X. OWNER AND OPERATOR CERTIFICATIONS

I certify under penalty of law that this document and all attachments were prepared under my direction or supervision in accordance with a system designed to assure that qualified personnel properly gather and evaluate the information submitted. Based on my inquiry of the person or persons who manage the system, or those persons directly responsible for gathering the information, the information submitted is, to the best of my knowledge and belief, true, accurate, and complete. I am aware that there are significant penalties for submitting false information, including the possibility of fine and imprisonment for knowing violations.

Ray J. Schepens — 3/25/04

Owner/Operator
R.J. Schepens, Manager
U.S. Department of Energy,
Office of River Protection

Date

J P Henschel — 3/25/04

Co-operator
J. P. Henschel, Project Director
Hanford Tank Waste Treatment and Immobilization Plant
Bechtel National, Inc.

Date

ECY 070-31 Form 3 (Rev. 7/00)

Page 8

WA 7890008967, ATTACHMENT 51
HANFORD TANK WASTE TREATMENT
AND IMMOBILIZATION PLANT
09/2003

RIVER PROTECTION PROJECT
WASTE TREATMENT PLANT
2435 STEVENS CENTER PLACE
RICHLAND, WA 99352

CONTRACT No: DE-AC27-01RV14136

WTP
SITE TOPOGRAPHY MAP

SCALE:

FIGURE 2A-2 PAGE 51-2A-2

REV

2

'E' SIZE - 44x34
COMPUTER GENERATED - MANUAL CHANGES NOT PERMITTED

WHEN REFERENCING DRAWING AND DIM NUMBERS IN DOCUMENTS, BE SURE TO INCLUDE DASHES BETWEEN ELEMENTS

08/07/2003 07:59:34 A

WA 7890008967, ATTACHMENT 51
HANFORD TANK WASTE TREATMENT
AND IMMOBILIZATION PLANT
09/2003

RIVER PROTECTION PROJECT
WASTE TREATMENT PLANT
2435 STEVENS CENTER PLACE
RICHLAND, WA 99352

CONTRACT No: DE-AC27-01RV14136

DWP WTP SITE VICINITY

SCALE:

FIGURE 2A-1 PAGE 51-2A-1

REV

2

'E' SIZE - 44x34
COMPUTER GENERATED - MANUAL CHANGES NOT PERMITTED

WHEN REFERENCING DRAWING AND DIM NUMBERS IN DOCUMENTS, BE SURE TO INCLUDE DASHES BETWEEN ELEMENTS

08/07/2003 08:00:44 AM

This information is exempt from public inspection and copying.

OFFICIAL USE ONLY

This information is exempt from public inspection and copying.