0040280

FEB 1995
RECEIVED
EDMC

FACT SHEET FOR STATE WASTE DISCHARGE PERMIT NO. ST 4502

ISSUED TO UNITED STATES DEPARTMENT OF ENERGY RICHLAND OPERATIONS OFFICE RICHLAND, WASHINGTON

BY STATE OF WASHINGTON DEPARTMENT OF ECOLOGY OLYMPIA, WASHINGTON

EXECUTIVE SUMMARY

The Washington State Department of Ecology (Ecology) is proposing to issue a State Waste Discharge Permit which will allow discharge of treated wastewater via infiltration through soils to the groundwaters of the state. The Applicant is the U.S. Department of Energy, Richland Operations Office. The new disposal facility is called the 200 Area Treated Effluent Disposal Facility. It is located east of the 200 East Area of the Hanford Site, and consists of an eleven mile-long pipeline and two adjacent five acre ponds.

Waters in close proximity to the ponds is found as groundwater at a depth of about 100 to 115 feet below the surface. The disposal site was selected to avoid potential mobilization of contaminants from historical disposal practices or potential impacts to historical, archaeological, and cultural resources. Computer modeling of groundwater flow provides an estimated travel time of approximately 10 to 20 years for the effluent to reach Columbia River.

Permitting of the new disposal facility's effluent was reviewed under the Washington State Environmental Policy Act (SEPA). An Environmental Checklist was completed. A determination of Nonsignificance under SEPA was made by Ecology. No comments were received during the public comment period.

The effluent will consist of individual wastestreams from seven Hanford facilities. All of these individual wastestreams are generated from uses that do not involve direct contact of the water with industrial processes. Uses that generate the effluents are primarily those associated with ventilation, heating, and cooling systems for the buildings; steam condensate from heating potable (drinkable) water; condensate of pressurized potable water; rainwater; and untreated Columbia River water. All of the seven facilities have been subjected to an extensive program of source controls (pollution prevention) to eliminate or reduce approximately 85% (percent) of prior contaminant loadings. Effluent treatment facilities have been constructed.

The draft permit complies with the regulatory requirements of Chapter 173-200 WAC - Water Quality Standards for Ground Waters of the State of Washington. This regulation is premised on the fact that all contaminants should be regulated to protect all existing and future beneficial uses of the groundwater. Since the use of drinking water is the most restrictive and protective, this regulation and the draft permit protects the groundwater for drinking water purposes. The draft permit establishes enforcement limits for nonradioactive contaminants or maximum allowable concentration levels, in the effluent and/or groundwater that are essentially drinking water standards. Hence, the permit requires that the effluent essentially meets drinking water standards for nonradioactive contaminants before discharge to the disposal ponds.

In the case of this permit, the Applicant shall be self-regulating for radioactive contaminants under the provisions of the Atomic Energy Act. The Applicant plans to meet the intent of 40 CFR Part 141, "National Primary Drinking Water Regulations," in regards to radioactive contaminants; and plans to take investigative and mitigative steps if drinking water standards are exceeded. Ecology is requiring monitoring and reporting of radionuclide concentrations in the effluent.

TABLE OF CONTENTS

		Page
1.0	Introduction	1
2.0	General Information	2
3.0	Background Information	5
	3.1 Description of the Facility	5
	3.2 Application of All Known, Available, and Reasonable Technology	5
	3.3 Description of Effluent Sources	5
	3.4 Description of the Treatment Processes	8
	3.5 Permit Status	10
	3.6 State Environmental Policy Act (SEPA) Compliance	10
	3.7 Site Characteristics	10
	3.8 Effluent Characteristics	13
	3.9 Existing Ground water Characteristics	17
4.0	Permit Limitations and Conditions	19
	4.1 Regulatory Format	19
	4.2 Enforcement Limits Derivation	20
5.0	Early Warning Values	23
	5.1 Usage	23
	5.2 Derivation	24
6.0	Monitoring and Reporting	24
7.0	Other Permit Conditions	25
	7.1 Reduced Production for Compliance	25
	7.2 Compliance with Other Laws and Statutes.	25
	7.3 Removed Substances	25
	7.4 Pretreatment Requirements	25
	7.5 Spill Control and Best Management Practices	25
	7.6 Operations and Maintenance	25
	7.7 General Conditions	26
8.0	Permit Issuance Procedures	26
	8.1 Public Notices, Hearing, and Comments	26
	8.2 Recommendation for Permit Issuance	27
	8.3 Permit Modifications	27

Appendices

Appendix A - References	A-1
Appendix B - Public Involvement Information	B-1
Appendix C - Technical Methodology	C-1
Appendix D - Glossary of Terms	D-1
Appendix E - Schematic Flow Diagram of Treatment Process at Plutonium Finishing Plant	E-1

1.0 INTRODUCTION

This fact sheet is a companion document to the draft State Waste Discharge Permit No. ST 4502. The Department of Ecology (Ecology) is proposing to issue this permit, which will allow discharge of treated wastewater (effluent) via infiltration through soils to the groundwaters of the State of Washington.

This fact sheet explains the nature of the proposed discharge, Ecology's decisions on limiting the contaminants in the effluent, and the regulatory and technical bases for those decisions. Public involvement information is contained in Appendix B. Details concerning the technical methodology and calculations are included in Appendix C. A glossary of terms is found in Appendix D.

2.0 GENERAL INFORMATION

Applicant: United States Department of Energy
Richland Operations Office

Facility Name
and Address: 200 Area Treated Effluent Disposal Facility; 200 East Area, 200 West Area, and Adjacent portions of 600 Area, Hanford Site, near Richland, Washington.

Type of Treatment:
The combined effluent has been subjected to an extensive program of source controls (pollution prevention) to eliminate or reduce approximately 85% of prior contaminant loadings. A total of seven facilities discharge to this disposal facility. An effluent treatment facility (see Appendix E) has recently been constructed for the Plutonium Finishing Plant's wastestream. It consists of granular activated carbon, bone char, and mixed bed ion exchange units. A new treatment facility at the 284-W Power Plant facility will provide flocculation and sedimentation units. Elementary neutralization to prevent pH violations is available at the B Plant facility. Elaborate procedures and systems are in place to retain and sample the effluent before discharge to this disposal facility. Unacceptable effluent will be rerouted to other treatment facilities. Previously existing pipelines have been examined and cleaned if determined to be a potential source of contamination. (See Sections 3.2 and 3.4 for more details).

Discharge Location: two adjacent five acre disposal ponds located in:
S 5,6 T 12N R 27E. (See Figures 1 and 2).

Four Corners of ponds located at:

Longitude	Latitude
119° 28' 27.884294"	46° 33' 14.396998"
119° 28' 6.767297"	46° 33' 14.248825"
119° 28' 6.982550"	46° 32' 59.680524"
119° 28' 28.097977"	46° 32' 59.828684"

Water Body: The effluent will be discharged to two evaporation/infiltration disposal ponds. Infiltration through soils will occur. Water in closest proximity to the ponds is found as groundwater at a depth of about 100 to 115 feet below the surface. The disposal ponds are located approximately six miles from the Columbia River.

Facility: 200 Area TEDF (Treated Effluent Disposal Facility)

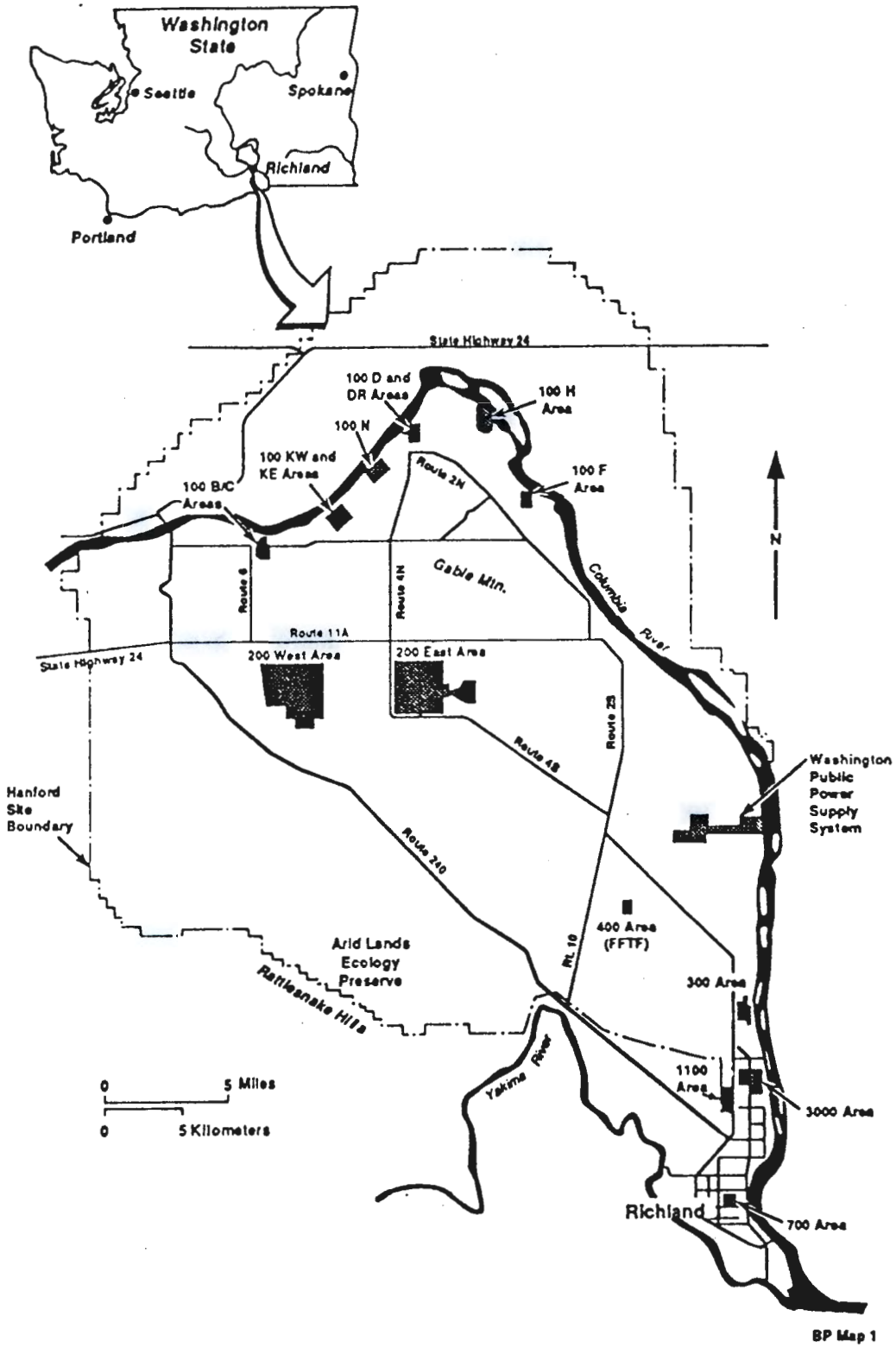

Figure 1. Hanford Site Map

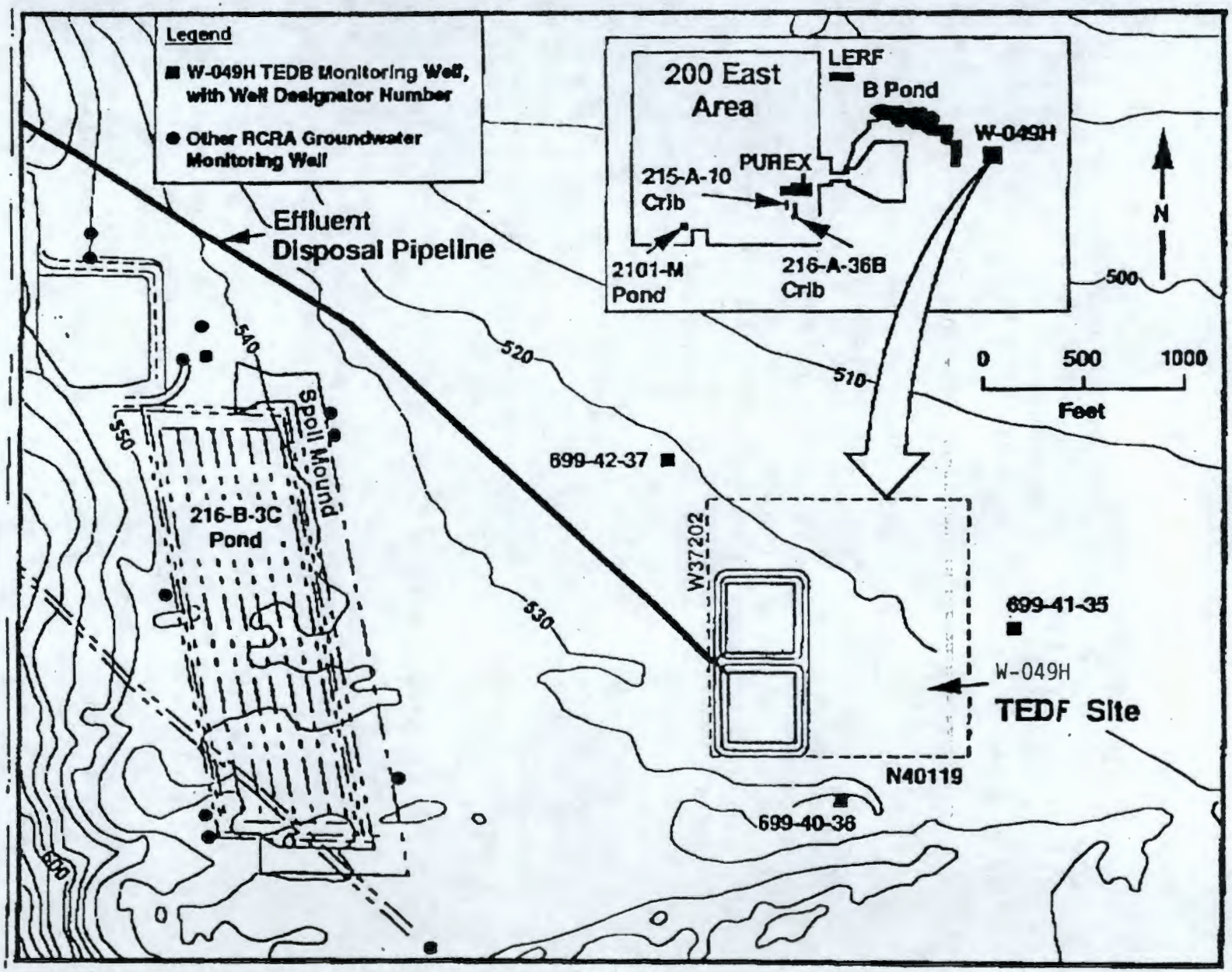

Figure 2. Location of the Treated Effluent Disposal Facility.

3.0 BACKGROUND INFORMATION

3.1 DESCRIPTION OF THE FACILITY

The 200 Area Treated Effluent Disposal Facility (Project W-049H) will collect and dispose of treated effluent from the Hanford Site's 200 East and 200 West areas, located about 25 miles northwest of Richland. The facility consists of a new 11 mile-long pipeline which will carry the effluent to two rock-lined disposal ponds. The disposal ponds are approximately five acres in size. The effluent will evaporate and infiltrate through the soil.

3.2 APPLICATION OF ALL KNOWN, AVAILABLE, AND REASONABLE METHODS

As a requirement for obtaining this State Waste Discharge Permit, the Applicant had to eliminate or reduce the contaminant loading in the effluent by applying all known, available, and reasonable methods (AKART) of prevention, control, and treatment prior to its discharge to the environment. In addition, AKART was required to be applied to reduce the volume of the effluent. This program of pollution prevention, effluent treatment, and facility construction and operation was also incorporated as a portion of Milestone 17 in the 1989 Hanford Federal Facility Agreement and Consent Order (Tri-Party Agreement) between the Applicant, the U.S. Environmental Protection Agency, and Ecology. The Tri-Party Agreement further requires that the Best Available Technology (BAT) that is economically achievable be applied to the effluent. An extensive engineering report (WHC-SD-W049H-ER-003, Volumes 1 and 2 as listed in Appendix A) describes all of the source controls, technology improvements, operational changes, and treatment technologies applied at all of the facilities to clean up the effluent and reduce its volume. Compliance inspections conducted by Ecology officials documented the implementation of the required improvements by the Applicant.

As a result of this multi-year effort, the toxic mass of contaminants in the effluent has been reduced by approximately 85%. The total cost of pollution prevention and disposal is projected to cost $20 million. The facility is scheduled to begin operation in May 1995. When the facility is fully operational, by the end of June 1995, all contributing effluent streams will no longer be discharged to their prior disposal sites.

3.3 DESCRIPTION OF EFFLUENT SOURCES

Individual effluent streams from seven Hanford facilities are combined and then discharged to the disposal facility. The seven facilities are: Plutonium Finishing Plant, T Plant, 222-S Laboratory, 284-W Power Plant, B Plant, 242-A-81 Water Services Building, and the PUREX facility. The draft permit provides for the addition of a limited quantity of a future, potential effluent stream(s) if it does not contain new contaminants and all permit conditions are met.

All of the seven effluent streams are generated from uses that do not involve direct contact of the water with industrial processes. No manufacturing processes or products are associated with the individual effluent streams. Uses that generate the effluent are primarily those associated with the following:

- ventilation, heating, and cooling systems for the buildings,
- steam condensate from heating potable (drinkable) water,
- condensate of pressurized potable water,
- rainwater from parking lots and exterior paved areas,
- potable (treated) water,
- untreated Columbia River water,
- boiler blowdown (water discharged from pipes carrying generated steam), and
- floor drains with limited and strictly controlled usage.

The following table summarizes the major sources of effluent generated at each of the seven facilities.

SOURCES OF EFFLUENT

FACILITY	USES GENERATING EFFLUENT
PLUTONIUM FINISHING PLANT	VENTILATION HEATING/COOLING, STEAM CONDENSATE, COOLING WATER, COMPRESSED AIR PRODUCTION, PROCESS WATER, RAINWATER, POTABLE WATER OVERFLOW
222-S LABORATORY COMPLEX	STEAM CONDENSATE, POTABLE WATER, RAINWATER
T PLANT AND ASSOCIATED LABORATORY	STEAM CONDENSATE, COOLING WATER, HEATING COIL WATER, FLOOR DRAINS
284-W POWER PLANT	BOILER DISCHARGE, COOLING WATER
PUREX PLANT	STEAM CONDENSATE, BOILER DISCHARGE, COOLING WATER

FACILITY	USES GENERATING EFFLUENT
B PLANT	STEAM CONDENSATE, BOILER DISCHARGE, COOLING WATER, POTABLE WATER, UNTREATED COLUMBIA RIVER WATER, RAINWATER
242-A-81 WATER SERVICES BUILDING	UNTREATED COLUMBIA RIVER WATER, STRAINER BACKWASH

A summary of the major activities conducted at each of the seven facilities follows. However, the reader should keep in mind that the effluent to be discharged under this draft permit is only generated from the limited activities listed in the preceding table. Hence, it is not subject to contamination from all activities at the facilities.

Plutonium Finishing Plant

The Plutonium Finishing Plant stabilizes reactive plutonium scrap mixtures and stores these plutonium compounds in secured vault areas. Low level process wastes, produced by these activities, are transferred to double-shell tanks for storage. They are not discharged to the 200 Area Treated Effluent Disposal Facility.

222-S Laboratory

The 222-S Laboratory's primary function is to provide chemical and radiological analyses of samples associated with ongoing Hanford Site operations and research programs.

T Plant

The T Plant provides decontamination services, waste verification, and other waste handling activities for the Hanford Site.

284-W Power Plant

The 284-W Power Plant provide back-up or reserve steam generation capacity from coal-fired boilers for usage at Hanford Site facilities.

PUREX Plant

The PUREX plant is not operating. It was a nuclear fuel processing facility that separated and recovered usable plutonium and uranium from an array of fission products contained in irradiated nuclear reactor fuel. It will be transitioned from standby to shutdown by September 1998. Thus most effluents have been eliminated or greatly reduced.

B Plant

The B Plant was used in the past as a fuel reprocessing facility. Currently, it includes the Waste Encapsulation Storage Facility, and ensures safe storage and management of radiological and chemical waste inventories. The facility also stores chemicals.

242-A-81 Water Services Building

The 242-A-81 Water Services Building houses equipment that strains coarse, suspended solids from untreated Columbia River water. Periodic flushing (backwashing) of the filtering media is required to cleanse the material, and results in an effluent.

3.4 DESCRIPTION OF TREATMENT PROCESSES

3.4.1 The 200 Area Treated Effluent Disposal Facility (Combined Effluent)

The 200 Area Treated Effluent Disposal Facility is a pipeline that conveys effluent from seven generating facilities to disposal/infiltration ponds, and does not provide any treatment. The effluent will be discharged continuously through the end of a concrete pipe into Pond A or Pond B. Engineering specifications and plans were reviewed and accepted by Ecology before construction.

3.4.2 Plutonium Finishing Plant Effluent

Source controls and end-of-pipe treatment were implemented as BAT/AKART for the effluent from the Plutonium Finishing Plant. A closed loop cooling system for three buildings and replacement of vacuum pumps with waterless pumps reduced water usage. End-of-pipe treatment includes an equalization tank, microfiltration to remove suspended solids, carbon adsorption to remove organics, bone-char adsorption to remove radionuclides, ion exchange to remove cations and anions, and a system of monitoring and sampling effluent water quality before discharge to the disposal/infiltration ponds. A schematic flow diagram of the treatment plant is included in Appendix E.

3.4.3 222-S Laboratory Effluent

Source controls were implemented as BAT/AKART for the 222-S Laboratory's effluent. Improvements included adding corrosion inhibitors to the steam supply to reduce metal concentrations; piping and equipment changes to reduce the potential for contamination; adding new retention tanks; eliminating steam cell heaters to avoid condensate generation; and replacing heating, ventilation, and air conditioning air washers with electric chillers to eliminate blowdown effluent.

3.4.4 T Plant Effluent

Source controls with retention/diversion capabilities were implemented as BAT/AKART for the T Plant's effluent. Water-cooled air compressors were replaced with air-cooled units. The water-cooled pressurized water reactor chiller was replaced with an air-cooled, refrigerant cooling system. Stored chemicals were removed and sumps and drains were sealed.

3.4.5 284-W Power Plant Effluent

Source controls and in-plant treatment were implemented at the 284-W Power Plant, and the 283-W Water Treatment Facility that supplies potable (drinking) water for the Hanford Site and the coal-fired boilers. New flocculation and sedimentation units, and meters were installed to better treat filter backwash at the water treatment facility. The treated water will be recycled. Automated level controls for the water treatment facility will be installed to eliminate overflow of untreated river water. Water-cooled compressors were replaced with air-cooled units; and closed-loop refrigeration cooling units were placed on welding machines.

3.4.6 PUREX Plant Effluent

Implemented source controls at PUREX included sealing off the sump under the tank car unloading station, and reactivating an existing PUREX concentrator to reprocess any effluent that should not be discharged to the 200 Area Treated Effluent Disposal Facility.

3.4.7 B Plant Effluent

Pollution prevention methods and in-plant treatment were implemented to clean up the effluent at B Plant. Source controls included rerouting, cleaning or replacing piping that was a potential source of contamination; replacing spill containment berms around chemical tanks; providing neutralization (treatment) for acidic and basic liquids; capping off drains; replacing a demineralizer with a deionizer; optimizing usage of pollution control equipment; and cleaning tanks. Other effluents that were determined to be too contaminated to discharge to this disposal facility were rerouted to another treatment/storage system. Storage tanks and monitoring equipment were installed to ensure acceptance of the effluent for discharge.

3.4.8 242-A-81 Water Services Building Effluent

It was determined that prior pollution prevention controls were adequate at the 242-A-81 Water Services Building.

3.4.9 Collection System Status

The new 11 mile-long pipeline, constructed to collect and convey the effluent to the disposal ponds has been tested for integrity. Older, pre-existing ancillary pipelines at individual facilities have been cleaned or replaced if determined to be a potential source of contamination from deposition of contaminants that were the result of past practices. Stormwater inputs to the system are limited in nature, documented, and strictly controlled. All access points to the system are strictly controlled and operated by trained personnel.

3.4.10 Residual Solids Disposal

The draft permit requires that collected solids, sludges, filter backwash or other pollutants that are removed in the course of treatment or control of the effluent are not resuspended or reintroduced to the liquid effluent stream or waters of the State. The draft permit requires that all solid waste materials be managed according to Ecology approved solid waste control plans.

3.5 PERMIT STATUS

A previous State Waste Discharge permit does not exist since this particular effluent did not exist in the past. Hence, a history of compliance with a previous permit is not in existence.

3.6 STATE ENVIRONMENTAL POLICY ACT (SEPA) COMPLIANCE

Permitting of the 200 Area Treated Effluent Disposal Facility was reviewed under the Washington State Environmental Policy Act (SEPA). An Environmental Checklist was completed. A Determination of Nonsignificance under SEPA was made by Ecology's Nuclear Waste Program. It was announced in the November 22, 1993 SEPA Register and in a public mailing. Comments were accepted until November 22, 1993. During the comment period, no comments were received. No special SEPA compliance issues were identified.

3.7 SITE CHARACTERISTICS

3.7.1. General Location

The Hanford Site is located within the semiarid Pasco Basin of the Columbia Plateau in south-central Washington State. The Hanford Site occupies an area of about 560 square miles northwest of the confluence of the Snake and Yakima rivers with the Columbia River. It comprises an area of about 30 miles north to south, and 24 miles east to west. This land has restricted public access and provides a buffer for the smaller areas currently used for production of nuclear materials, waste storage, and waste disposal. Only about 6% of the land area has been disturbed and is actively used.

The Columbia River flows through the northern part of the Hanford Site. It then turns south and forms part of the Site's eastern boundary (see Figure 1). The Yakima River runs along part of the southern boundary and joins the Columbia River below the City of Richland. Richland borders the Hanford Site on the southeast. Rattlesnake Mountain, the Yakima Ridge, and Umtanum Ridge form the southwestern and western boundaries of the Hanford Site. The Saddle Mountains form the northern boundary. Two small east-west ridges, Gable Butte and Gable Mountain, rise above the plateau of the central part of the Hanford Site. Adjoining lands to the west, north, and east are principally range and agricultural lands. The cities of Richland, Kennewick, and Pasco constitute the nearest population centers and are located southeast of the Hanford Site.

The Hanford Site encompasses more than 1500 waste management units and four groundwater contamination plumes that have been grouped into 78 operable units. The 200 Area Treated Effluent Disposal Site is located near the center of the Hanford Site, approximately two miles east of the eastern boundary of the 200 East Area (see Figures 1 and 2). The site was chosen due to the fact that area soils were essentially uncontaminated; and modeling indicated that additional infiltration would not mobilize contaminants or contribute to contamination plume migration originating from other locations.

3.7.2 Geology and Hydrogeology of the Facility Site

The 200 Area Treated Effluent Disposal Site is underlain by geologically young sediments that, in turn, are underlain by bedrock. The bedrock is Columbia River Basalt, at a depth of about 250 feet below the surface. The bedrock slopes gently (approximately one-half of a degree) toward the south-southwest. The sediments that lie immediately above the basalt are called the Ringold Formation. The Hanford Formation lies above the Ringold Formation. Alluvium and dune sand cover part of the surface of the site.

The upper part of the Hanford Formation consists of highly permeable, unconsolidated gravel. The lower part of the formation consists of silt and sandy gravel. The thickness of the formation varies from approximately 80 feet north, to about 120 feet south of the site. The hydraulic conductivity (permeability) of this formation is very high.

The Ringold Formation at the disposal site consists of lenses (localized pockets) composed of partially consolidated sand and gravel, fine-grained sand, and silt and clay locally cemented by caliche. The Ringold Formation contacts the Hanford Formation at approximately 90 to 110 feet beneath the surface. The uppermost part of the Ringold Formation consists of relatively impermeable silt and clay that varies from about 40 feet thick at the northwest corner to about 80 feet thick at the southeast corner of the site. These silts and clays are called the Lower Mud Sequence of the Ringold formation. The lower part of the Ringold Formation, below this Lower Mud Sequence, consists of a 75 to 120 (approximate) foot thick zone of gravel that is named Unit A. The uppermost aquifer below the disposal site is found primarily in this gravel zone. The three groundwater monitoring wells, installed to monitor this disposal activity, penetrate to this aquifer. The static water level in the uppermost

aquifer currently varies from approximately 100 to 115 feet below the surface. Both the Lower Mud Sequence and Unit A slope gradually to the south-southeast.

It is anticipated that the Lower Mud Sequence of the Ringold Formation will act as an effective retardant to movement of overlying water (originating from the disposal ponds) down to the uppermost groundwater aquifer in the Unit A gravels. This phenomenon will occur because the mud is highly impermeable, and do not conduct water well. Hence, the presence of the mud sequence will naturally prevent water from moving directly downward below the Hanford formation. The muds also act to confine the groundwater in the Unit A gravels beneath the site such that it has a positive upward pressure gradient. This positive pressure will also impede the entry of the treated effluent into the aquifer in the immediate vicinity of the disposal facility.

Groundwater flows down-gradient at an average flow rate of about one to two feet per day in the uppermost aquifer. Groundwater is currently flowing radially outward from the 216-B-3 Pond complex (located west-northwest of the 200 Area Treated Effluent Disposal Facility). The hydraulic gradient is currently about 0.002 foot per foot.

The Lower Mud Sequence of the Ringold formation is absent beneath portions of the main, A, and B lobes of the 216-B-3 Pond complex. Consequently, effluent previously discharged to these ponds migrated directly downward into the uppermost aquifer of the Ringold Unit A gravel. The additional volume and down-gradient movement of these B pond discharges contributes to the upward pressure gradient currently observed in the upper-most aquifer beneath the 200 Area Treated Effluent Disposal Facility. Since effluent discharge to the main pond, and A and B lobes of the 216-B-3 Pond complex has ceased, the magnitude of the hydraulic head in the aquifer beneath the 200 Area Treated Effluent Disposal Facility is expected to gradually decrease.

Effluent is currently being directed to the 3C expansion pond of the 216-B-3 Pond complex. At this location, the Lower Mud Sequence is known to be present. Consequently, the water infiltrating downward from this pond likely does not directly enter the upper most aquifer. Instead, the water may flow laterally down-gradient along the top of the Lower Mud Sequence until it reaches an area where the mud does not exist, or is offset by a fault. This discharge is scheduled to cease in October 1997.

The May Junction Fault is found approximately 1 mile east, and down-gradient from the 200 Area Treated Effluent Disposal Facility. It trends north-south. The fault may hydraulically connect the confined aquifer in the unit A gravel of the Ringold formation with water perched in the Hanford formation at the top of the Lower Mud Sequence.

East of the May Junction Fault to the Columbia River, the upper most aquifer is found in the Hanford formation gravels, with the possible exception of the area east-northeast of Gable Mountain. Geologic processes in this area have resulted in the upper most aquifer likely occurring in Unit A of the Ringold Formation.

The disposal facility is located approximately six miles west of the Columbia River. Computer modeling of groundwater flow provides an estimated travel time of approximately 10 to 20 years for effluent discharged at the 200 Area Treated Effluent Disposal Facility to reach the Columbia River.

3.7.3 Precipitation

The average annual precipitation at the Hanford Site is 6.3 inches. Minor local variations occur. Most of the precipitation occurs during the winter, with nearly half of the annual amount occurring from November through February. Snowfall accounts for about 38% of all precipitation. Days with greater than 0.51 inch of precipitation occur less than 1% of the year. These semiarid conditions mitigate the development of groundwater contamination plumes.

3.7.4 Flooding Potential

Projections are that the probable maximum flood on the Columbia River would not encroach within 3 miles of the 200 Area Treated Effluent Disposal Site.

3.7.5 Terrestrial Ecology

The Hanford Site has been botanically characterized as a shrub-steppe. The major plant community in the vicinity of the 200 Area Treated Effluent Disposal Area is Sagebrush/ Cheatgrass or Sandberg Bluegrass and Greasewood/Cheatgrass-Saltgrass.

3.7.6 Historical, Archaeological, and Cultural Resources

The disposal site was selected to avoid impact on historical, archaeological, and cultural resources.

3.8 EFFLUENT CHARACTERISTICS

3.8.1 Characteristics

At the time of draft permit development, the effluent has been characterized as seen in the following table. The numerical values are based on a rather limited data base. Constituents labeled with footnote 1 are suspected of sometimes being potentially present in the effluent in very low concentrations. A conservative approach has been taken in assuming that such constituents may be present. The concentrations listed for such a constituent (denoted by footnote 1) are the lowest values that can be reliably measured in a laboratory; and such a constituent is not necessarily found in measurable quantities in the effluent. A part per billion (ppb) is approximately equivalent to one-half inch in the circumference of the world.

The only organic, man-made contaminants that were detected at verifiable concentrations are total trihalomethanes. Total trihalomethanes are by-products of disinfecting water for drinking water purposes. The anticipated concentrations in the effluent do not exceed the levels considered acceptable for human consumption. All other constituents that are considered contaminants in drinking water do not exceed concentrations considered acceptable for human consumption. The ensuing table lists these acceptable concentrations for human consumption. See column entitled Groundwater (Drinking Water) Criteria.

EFFLUENT'S CHARACTERISTICS

Constituent or Characteristic	Projected Concentration in Effluent(2)	Practical Quantification Level (lowest concentration laboratories can reliably measure)	Groundwater (Drinking Water) Criteria
total trihalomethanes	66 ppb	20 ppb	100 ppb
bis (2-ethylhexyl) phthalate (1)	less than or equal to 10 ppb	10 ppb	6 ppb
methylene chloride (1)	less than 5 ppb	5 ppb	5 ppb
phenol (1)	less than or equal to 10 ppb	10 ppb	none, assume equals PQL
carbon tetrachloride (1)	less than 5 ppb	5 ppb	0.3 ppb
1,1,1 trichloroethane (1)	less than 5 ppb	5 ppb	200 ppb
cyanide	less than 50 ppb	50 ppb	200 ppb
specific conductivity	200 micromhos/cm	10 micromhos/ cm	none - not a listed contaminant
pH (pH units)	6.5 - 8.5	0.1	6.5-8.5
total dissolved solids	250 ppm	10 ppm	500 ppm
nitrate plus nitrite-Nitrogen	620 ppb	100 ppb	10,000 ppb
chloride	58 ppm	1 ppm	250 ppm
sulfate	41 ppm	10 ppm	250 ppm

Constituent or Characteristic	Projected Concentration in Effluent[2]	Practical Quantification Level (lowest concentration laboratories can reliably measure)	Groundwater (Drinking Water) Criteria
calcium (total)	22 ppm	0.14 ppm	none - not a listed contaminant
magnesium (total)	5 ppm	0.7 ppm	none - not a listed contaminant
Biochemical Oxygen Demand (5 day)	not detected	--	none - not a listed contaminant
Chemical Oxygen Demand	not detected	--	none - not a listed contaminant
ortho-phosphate- as Phosphorus	not detected	3 ppm	none - not a listed contaminant
Total Phosphorus	40 ppb	--	none - not a listed contaminant
fluoride	230 ppb	700 ppb	4,000 ppb
total suspended solids	2.7 ppm	--	none - not a listed contaminant
arsenic (total)	less than 15 ppb	15 ppb	0.05 ppb
barium (total)	94 ppb	20 ppb	1000 ppb
mercury (total)	less than 2 ppb	2 ppb	2 ppb
iron (total)	258 ppb	100 ppb	300 ppb
manganese (total)	8.1 ppb	50 ppb	50 ppb

Constituent or Characteristic	Projected Concentration in Effluent(2)	Practical Quantification Level (lowest concentration laboratories can reliably measure)	Groundwater (Drinking Water) Criteria
cadmium (total)	less than 5 ppb	5 ppb	10 ppb
chromium (total)	less than 20 ppb	20 ppb	50 ppb
lead (total)	less than 10 ppb	10 ppb	50 ppb
selenium (total)	none detected	--	10 ppb
silver (total)	5 ppb	40 ppb	50 ppb
copper (total)	140 ppb	40 ppb	1000 ppb
zinc (total)	120 ppb	30 ppb	5000 ppb
tritium	less than 460 pCi/l	460 pCi/l	20,000 pCi/l
radium, total (1)	less than 1 pCi/l	1 pCi/l	5 pCi/l
radium, 226 (1)	less than 1 pCi/l	1 pCi/l	3 pCi/l
gross alpha	10 pCi/l	3 pCi/l	15 pCi/l
gross beta	18 pCi/l	4 pCi/l	50 pCi/l

pCi/l equals picoCurie per liter, a measure of radioactivity.
ppb equals parts per billion or microgram per liter.
ppm equals a part per million or milligram per liter.
(1)Suspected to be potentially present, at times, although concentrations are often below laboratory detection. Values listed for the Practical Quantification Limit (PQL) are defined as the lowest concentration of a substance that can be reliably measured, within specific limits of precision, during routine laboratory operating conditions.

(2)Projected concentrations represent the upper 95% confidence interval of a statistical lognormal distribution, which means that one can be confident that 95% of the time, the concentrations will be at or below the listed value, based on the analysis of the existing data base. The recommended statistical procedures of the U.S. Environmental Protection Agency were followed (see Appendix A - References).

A thorough analysis of chemical constituents of potential concern is found in the Engineering Report (WHC-SD-W049H-ER-003, volumes 1 and 2), the Stream-Specific Reports (see Appendix A - References), and subsequent permit application materials. A thorough evaluation of historical and current on-site chemical usage and manufacturing processes was

conducted to identify what constituents should be tested for in all of the individual effluents. Sampling, laboratory analysis, and statistical data evaluation was then conducted on the individual effluent streams. Analytical results for the individual effluent streams were then combined mathematically to calculate flow-proportional composite values for the combined effluent. Regulatory efforts and evaluation were then focused on the constituents of potential concern. (See Section 4.0 for a summary of the methodology used to develop enforcement limits, early warning values, and monitoring requirements).

3.8.2 Potential Toxic Constituents

Chloroform and bromodichloromethane are known to be the residual by-products of chlorinating the Columbia River water to render it suitable for human consumption by Hanford Site employees. These two constituents are two species of the four trihalomethanes by-products commonly found in public drinking water supplies that have been chlorinated for disinfection purposes. Current drinking water standards allow a residual concentration of 100 ppb of total trihalomethanes in drinking water delivered to the publics' homes. There is also a groundwater quality criterion for chloroform. An enforcement limit, based on technology, has been established for total trihalomethanes. Monitoring for chloroform has also been required.

Bis (2-ethylhexyl) phthalate is a common contaminant from using plastic pipes to carry water. The low levels found in the effluent are indicative of this source. Methylene chloride, phenol, carbon tetrachloride, and 1,1,1 trichloroethane are all common solvents. The likely sources, if any, are facility laboratories, resulting from trace contaminants on glassware, for example. Another potential source is Columbia River water, source of the Hanford Site's drinking water supply. The likely source of arsenic is also the river.

There are no scheduled or planned discharges of radionuclides such as tritium or radium to the effluent from the seven facilities discharging to the 200 Area Treated Effluent Disposal Facility. Hence, the likely source of any concentrations found in the effluent is the Columbia River water that is treated and used for human consumption on the Hanford Site.

3.9 BACKGROUND GROUNDWATER CHARACTERISTICS

A statistical evaluation of 7 quarters of monitoring data from groundwater monitoring wells 699-42-37 (upgradient), 699-41-35 and 699-40-36 (downgradient), located within approximately one thousand feet of the 200 Area Treated Effluent Disposal facility is presented in the following table. The wells are completed in, and sample, the upper most aquifer. The values found in the table represent conditions present in the upper most aquifer prior to discharge. Recommended statistical evaluation methods of the U.S. Environmental Protection Agency (see Appendix A - References) were used.

No organic or man-made contaminants are suspected of contaminating the existing groundwater prior to discharge (background). Based on evaluation of available data, background

groundwater concentrations of arsenic, chromium, iron, and manganese exceed groundwater (drinking water) criteria. These exceedances are thought to be due to natural, not man-made causes.

REPRESENTATIVE BACKGROUND GROUNDWATER CHARACTERISTICS

CONSTITUENT OR CHARACTERISTIC	WELL 699-42-37	WELL 699-41-35	WELL 699-40-36
total trihalomethanes	not detected	not detected	not detected
bis (2-ethylhexyl) phthalate	not detected	not detected	not detected
methylene chloride	not detected	not detected	not detected
phenol	not detected	not detected	not detected
carbon tetrachloride	not detected	not detected	not detected
1,1,1 trichloroethane	not detected	not detected	not detected
cyanide (total)	not detected	not detected	not detected
specific conductivity, micromhos/cm	415	340	352
pH, in pH units	7.31-8.59	6.9-8.94	7.26-8.46
total dissolved solids	332,000 ppb	246,000 ppb	266,000 ppb
nitrate plus nitrite	8,167 ppb	1,168 ppb	1,085 ppb
arsenic (total)	7 ppb	6 ppb	21 ppb
barium (total)	119 ppb	171 ppb	107 ppb
mercury (total)	not detected	not detected	not detected
cadmium (total)	not detected	not detected	not detected
chromium (total)	165 ppb	781 ppb	776 ppb
lead (total)	not detected	not detected	not detected
iron (total)	16,941 ppb	948 ppb	5,243 ppb
manganese (total)	431 ppb	283 ppb	307 ppb
radium, 226 pCi/l	no data	no data	no data
radium, total pCi/l	insufficient data	insufficient data	insufficient data
gross alpha, pCi/l	13.3	24	18.3
gross beta, pCi/l	12.8	20	17.5

4.0 PERMIT LIMITATIONS AND CONDITIONS

4.1 REGULATORY FORMAT

The draft permit was developed to comply with the regulatory requirements of Chapter 173-200 WAC - Water Quality Standards for Ground Waters of the State of Washington. These standards for ground water protection implement chapter 90.48 RCW, the Water Pollution Control Act, and Chapter 90.54 RCW, the Water Resources Act of 1971. These standards for ground water protection are enforced through such legal means as the issuance of State Waste Discharge permits. Hence, the regulatory requirements of Chapter 173-216 WAC - State Waste Discharge Permit Program were also met.

The Water Quality Standards for Ground Waters of the State of Washington is premised on the fact that all contaminants should be regulated to protect all existing and future beneficial uses of the groundwater. A contaminant is defined as any chemical, physical, biological, or radiological substance which does not occur naturally in groundwater, or occurs at concentrations greater than those of natural levels. Since the beneficial use of drinking water is the most restrictive and protective, this regulation requires that under most circumstances, the groundwater should be protected for drinking water purposes. This requirement has been followed in this draft permit. Chapter 173-200 WAC provides groundwater quality criteria (maximum allowable concentration levels that are essentially drinking water standards) for primary (e.g. lead), secondary (e.g. chloride), radionuclides (e.g. gross alpha), and carcinogenic (e.g. arsenic) contaminants. These criteria are not to be exceeded except if very restrictive conditions are met. In the event of multiple carcinogens potentially present in the groundwater, the total incremental human cancer risk of less than one in a million is not to be exceeded. Conditions of the draft permit comply with this theoretical limit on total cancer risk. If a contaminant does not possess a criterion, it's concentration is not to exceed the lowest concentration that can be reliably measured by a laboratory (the Practical Quantification Level), unless it is clear to Ecology that an alternative concentration will provide protection to human health and the environment. Many of the enforcement limits for this draft permit equal the PQL. However, the reader should keep in mind that treated drinking water, delivered to homes by public water supply systems and meeting all applicable standards, contains acceptable concentrations of metals and salts, for example, that are not considered health risks or cause unacceptable aesthetic characteristics.

In the case of this permit, the Applicant shall be self-regulating for radioactive contaminants under the provisions of the Atomic Energy Act. The applicant plans to meet the intent of 40 CFR Part 141, "National Primary Drinking Water Regulations," in regards to radioactive contaminants; and plans to take investigative and mitigative steps if drinking water standards are exceeded. Ecology is requiring monitoring and reporting of radionuclide concentrations in the effluent.

Certain constituents, such as fluoride and silver, were measured at concentrations in the effluent that were much lower than groundwater (drinking water) criteria. If such

constituents were not known to be added to the effluents at any of the seven facilities, they were determined not to be constituents of concern.

The preceding groundwater (drinking water) criteria are called water quality-based permit limits. Chapter 173-200 also requires that all contaminants proposed for entry into groundwaters be subjected to all known, available, and reasonable methods of prevention, control, and treatment (AKART) prior to discharge. These are called technology-based permit limits. If the Applicant can reduce the concentration of a constituent to a level that is even lower than its specified criterion, then the lower technology-based or AKART concentration must be met in the effluent. Finally, the Applicant is required to operate all treatment facilities so that all design limitations, such as flow volumes, are not exceeded. Section 4.2 describes the water quality-based and technology-based permit limits that were derived for this draft permit.

The point of compliance is the location where the enforcement limit must be met. The point of compliance is to be established in the groundwater as near the source of discharge as technically, hydrogeologically, and geographically feasible. Groundwater monitoring wells 699-41-35 and 699-40-36 have been established as the major points of compliance for this effluent. In certain cases, in order to be more protective of groundwater (drinking water) criteria, points of compliance for certain constituents have been established at the point of discharge (i.e., the effluent).

The purpose of an Early Warning Value is to provide early detection of increasing contaminant concentrations in the groundwater that may approach or exceed enforcement limits. Corrective actions are required by Ecology if Early Warning Value are exceeded, and if action is determined to be warranted. An Early Warning Value has been developed (see section 5.0) for total trihalomethanes. An evaluation determined that other Early Warning Values were not feasible due to the inability of laboratories to measure concentrations that low (below the PQL) or due to a constituent's background concentrations exceeding effluent concentrations.

4.2 ENFORCEMENT LIMITS DERIVATION

The following table provides a summary of the required enforcement limit for each constituent of concern, point of compliance, limit type (i.e. water quality or technology based), and a brief explanation of the selection rationale. The rationale explanation "criteria met" means that the groundwater (drinking water) criteria from Chapter 173-200-040 were not exceeded, hence concentrations do not exceed levels recommended for human consumption.

ENFORCEMENT LIMIT DERIVATION SUMMARY

Constituent or Characteristic	Enforcement Limit	Point of Compliance	Type of Limit	Rationale/ Method of Derivation
Total trihalomethanes	66 ppb	groundwater	technology-based	Criteria met. Limit set at lowest level achievable in effluent by source and technology controls.
1,1,1 trichloro-ethane	5 ppb	groundwater	technology-based	Criteria met. Limit set at lowest level reliably measured in laboratory (PQL).
cadmium	5 ppb	groundwater	technology-based	Criteria met. Limit set at PQL.
cyanide	50 ppb	groundwater	technology-based	Criteria met. Limit set at PQL.
lead	10 ppb	groundwater	technology-based	Criteria met. Limit set at PQL
pH, in pH units	6.5 to 8.5	groundwater	water quality-based	Criteria met. Range provided due to natural variability in groundwater.
arsenic	15 ppb	effluent	water quality-based	Criteria too low to discern (reliably) in laboratory. Limit set at PQL

Constituent or Characteristic	Enforcement Limit	Point of Compliance	Type of Limit	Rationale/ Method of Derivation
Bis (2-ethylhexyl) phthalate	10 ppb	effluent	water quality-based	Criteria too low to discern (reliably) in laboratory. Limit set at PQL.
phenol	10 ppb	effluent	water quality-based	Criteria too low to discern (reliably) in laboratory. Limit set at PQL.
carbon tetrachloride	5 ppb	effluent	water quality-based	Criteria too low to discern (reliably) in laboratory. Limit set at PQL.
chromium	20 ppb	effluent	technology-based	Criteria met. Limit set at PQL. Background ground water values exceed criteria.
nitrate	620 ppb	effluent	technology-based	Criteria met. Limit set at as low a level as source and technology controls can achieve.
chlorides	58 ppm	effluent	technology-based	same as above
mercury	2 ppb	effluent	technology-based	Criteria met. Limit set at PQL.

Constituent or Characteristic	Enforcement Limit	Point of Compliance	Type of Limit	Rationale/ Method of Derivation
total dissolved solids	250 ppm	effluent	technology-based	Criteria met. Limit set at lowest level achieved by source controls and technology.
iron	258 ppb	effluent	technology-based	Criteria met. Limit set at lowest level achieved by source controls and technology. Background ground water exceeds criteria.
manganese	50 ppb	effluent	technology-based	same as above.
methylene chloride	5 ppb	effluent	technology-based	Criteria met. Limit set at PQL.

5.0 EARLY WARNING VALUES

5.1 USAGE

Early Warning Values provide early detection of increasing contaminant concentrations that could approach or exceed enforcement limits. Exceedance of an Early Warning Value requires that the Applicant file a report with Ecology. Specific regulatory requirements require that the Applicant address the significance of the exceedance, and propose needed mitigation measures. Ecology decides if corrective measures or additional investigations are warranted. Exceedance of an Early Warning Value does not constitute a legal violation on the part of the Applicant.

5.2 DERIVATION

Early Warning Values were sought for all constituents of concern. However, since most of the enforcement limits equal the lowest level of precision that laboratories can reliably measure (the PQL), it was not possible to establish even lower PQLs. In other cases, the background ground water criteria was greater than the calculated Early Warning Value. An Early Warning Value was derived for total trihalomethanes in the groundwater, and is presented in the ensuing table. To be further protective of groundwater, Early Warning Values were established in the effluent for five constituents.

EARLY WARNING VALUE DERIVATION SUMMARY

Constituent of Concern	Early Warning Value	Point of Measurement	Rationale/Method of Derivation
total trihalomethanes	50 ppb	groundwater	set at 75% of the enforcement limit
total trihalomethanes	66 ppb	effluent	set at enforcement limit
1,1,1 trichloroethane	5 ppb	effluent	set at PQL
cadmium	5 ppb	effluent	set at PQL
cyanide	50 ppb	effluent	set at PQL
lead	10 ppb	effluent	set at PQL

6.0 MONITORING AND REPORTING

Effluent monitoring, recording, and reporting are required to verify that prevention, control, and treatment processes are functioning correctly and that enforcement limits are being achieved. A special variability study is required to better characterize the effluent.

Groundwater monitoring, recording, and reporting are required in order to verify that controls are adequately protecting the ground water, that enforcement limits are being met, and to provide an early warning of a potential violation of an enforcement limit. A separate groundwater screening evaluation will be conducted to analyze for a more exhaustive list of constituents that may be in the effluent or groundwater.

The monitoring, testing, and reporting schedule is detailed in the draft permit under Sections S.5, S.6, S.7, S.8, S.9, G.11, G.12, G.13, G.14, G.15, G.16, and G.17. Specified monitoring frequencies take into account the quantity and variability of the effluent, the treatment or control method, significance of pollutants, and cost of monitoring. The required monitoring frequency is consistent with guidance in Ecology's Permit Writer's Manual.

7.0 OTHER PERMIT CONDITIONS

The General Conditions of the draft permit require that the Applicant comply with all the AKART requirements to ensure that the effluent is as uncontaminated as technically possible. The following sections summarize the major conditions.

7.1 REDUCED PRODUCTION FOR COMPLIANCE

The Applicant is required to control the production of effluent to the extent necessary to comply with all the terms and conditions of the draft permit, per condition G.2. The Applicant is required to continuously comply with the permit requirements per condition G.1.

7.2 COMPLIANCE WITH OTHER LAWS AND STATUTES

Per condition G.7 of the draft permit, the Applicant is required to comply with any other applicable federal, state, or local statutes, ordinances, or regulations.

7.3 REMOVED SUBSTANCES

Pollutants removed in the course of treatment or control of effluent cannot be resuspended or reintroduced to the effluent, per condition G.8 of the draft permit.

7.4 PRETREATMENT REQUIREMENTS

The Applicant is required to implement all the effluent pretreatment requirements as described in Ecology approved engineering reports, plans, specifications, and application materials, per condition G.19.

7.5 SPILL CONTROL AND BEST MANAGEMENT PRACTICES

The Applicant must implement all of the spill prevention, source control, and best management practices described in the referenced engineering report to prevent and control pollutant discharge from plant site runoff, spillage, leaks, sludge or waste disposal, and raw material storage. To prevent water quality problems occurring from the improper storage, handling, or disposal of solid wastes, the Applicant is required to handle and dispose of all residual solids in accordance with all applicable federal, state, and local regulations. The Ecology approved spill and solid waste control plans for each facility must be followed. These conditions are described in section G.19 of the draft permit.

7.6 OPERATIONS AND MAINTENANCE

The Applicant is responsible for the proper operations and maintenance of the facilities and systems of control installed to achieve compliance with the terms and conditions of this permit. The Applicant is required to follow Ecology-approved design flows and waste

loadings. Operations and Maintenance Plans have been developed for each facility, and are required by the draft permit condition G.20 to be followed, available to Ecology, and updated annually.

7.7 OTHER GENERAL CONDITIONS

The Applicant is required to immediately notify Ecology of any inability to comply with the terms and conditions of the permit. Specific actions are required as provided in condition G.21. Condition G.4 requires prior Ecology approval of any facility change which results in a new or increased discharge or change in the nature of the effluent which is not authorized by this permit. Ecology approval is required prior to constructing or modifying any treatment facility per condition G.5. The final permit is issued for a period of 5 years. The Applicant must reapply for any requested permit renewal at least 60 days prior to the expiration date per condition G.10. Records must be maintained of all monitoring information for at least three years per condition G.12. All reports and information submitted to Ecology must be signed and certified by a principal executive officer, or a duly authorized representative of that person. Signatory language and requirements are described under condition G.18.

Ecology can terminate the permit, subject to 30 days written notice, if it finds that the permit was procured by misrepresentation of fact or lack of full disclosure, a violation of the permit conditions exists, or a material change in the quantity or type of allowable effluent exists. See condition G.22 for specifics.

8.0 PERMIT ISSUANCE PROCEDURES

8.1 PUBLIC NOTICE, HEARINGS, AND COMMENTS

Public involvement is sought and required in the permit development and issuance process. The role of the State Environmental Policy Act (SEPA) in development of this permit is discussed in section 3.9. The permit development process is summarized as follows. A public notice of application for a State Waste Discharge Permit is published in a major newspaper in the geographic area of the discharge. Publications in other newspapers may be made. Mailings are also made to interested persons; and the directors of the State's departments of Fisheries and Wildlife, and Social and Health Services.

The proposed draft permit and fact sheet is forwarded to the Applicant for comment on factual content at least 30 days before beginning the formal public review period. Only factual items are corrected in the draft permit and fact sheet. The Applicant is advised that the proposed permit conditions could be changed during the public review process. If the proposed draft permit is significantly different than the previous permit, the permit writer shall offer the Applicant an opportunity to meet. The purpose of the meeting is to explain new or changed requirements, receive comments on factual content, and discuss the practicality of compliance schedules.

Ecology then publishes the public notice of draft permit as a legal, classified advertisement at least once in the same major paper in which the public notice of application was published. A public notice of draft permit is also mailed to parties of record, who are persons who responded to the public notice of application, or who have otherwise requested to be kept informed. The comment period following a public notice of draft permit will normally be 30 days from the date of the latest notice.

Ecology will hold formal public hearings whenever the permit section supervisor deems that there is sufficient interest and a likelihood of meaningful public comment on a permit. Ecology has decided to hold a public hearing to receive public comment on this draft permit. The public notice will be published at least 30 days prior to the hearing, and will also be mailed to parties of record. An informational meeting will be held prior to the public hearing. Established Ecology procedures exist for conducting the hearing. A response to the public comments received by Ecology at the hearing will be made by Ecology. Notices of permit issuance will be mailed by Ecology to parties of record.

Notices of appeals of permits will be mailed to parties of record, as will decisions on appeals. Major modifications, suspension, or revocation of a State Waste Discharge Permit also require public review and comment. Hence, public notices of intent and notifications to parties of record will be made.

8.2 RECOMMENDATIONS FOR PERMIT ISSUANCE

This proposed draft permit meets all statutory requirements for authorizing an effluent discharge, including those limitations and conditions believed necessary to protect human health, ground water, and the beneficial uses of waters of the State of Washington. Ecology proposes that this permit be issued for 5 years. Justification for this recommendation is found through out this fact sheet.

8.3 PERMIT MODIFICATIONS

This draft permit can be modified in whole or in part by Ecology for such reasons as: violations by the Applicant, obtaining the permit by misrepresentation or failure to disclose, material change in type of waste disposal, material change in the condition of the waters of the State, promulgation or revisions of regulatory standards, or errors in best professional judgement on the part of the permit writer due to data limitations in existence at the time of permit development. The Applicant can also request permit modifications, which Ecology can accept, accept with modifications, or deny.

APPENDIX A - REFERENCES

200 Area Treated Effluent Disposal Facility (Project W-049H) Effluent Engineering Report, February 1992, WHC-SD-W049H-ER-003, Rev. 0, Volumes 1 and 2.

Westinghouse Hanford Company (WHC) 1988, Best Available Technology (Economically Achievable) Guidance Document for the Hanford Site, WHC-EP-0137, Westinghouse Hanford Company, Richland, Wa.

WHC, 1990, Hanford Site Stream Specific Reports, WHC-EP-0342, Addenda 1-33.

WHC, 1991, Site Evaluation Report - Site Screening, Evaluation, and Selection, Project W049-H, 200 Area Treated Effluent Disposal Basin, WHC-SD-W049H-SE-004, Rev. 0.

Site Characterization Report for the 200 Area Treated Effluent Disposal Facility (Project W-049H), WHC-SD-EN-SE-004, Rev. 0.

Functional Design Criteria (FDC), WHC-SD-W049H-FDC-001, Rev. 1.

Conceptual Design Report; 200 Area Treated Effluent Disposal Facility, Project W049H, WHC-SD-W049H-CDR-002, Rev. 1.

Preliminary Safety Evaluation, 200 Area Treated Effluent Disposal Facility, WHC-SD-W049H-PSE-001.

200 Area Treated Effluent Disposal Facility Project Management Plan, WHC-SD-W049H-PMP-001.

Verification of Source Controls for W049H Treated Effluent Disposal Facility, Milestone 17, September 23, 1994 and October 10, 1994, report of Joanne C. Chance, P.E., Nuclear Waste Program, Washington State Department of Ecology.

Hanford Site National Environmental Policy Act (NEPA) Characterization, December 1991, Pacific Northwest Laboratory (PNL), PNL-6415, Rev. 4, UC-600.

State Waste Discharge Permit Application, 200 Area Treated Effluent Disposal Facility (Project W-049H), U.S. Department of Energy, Richland, Wa., DOE/RL-94-29, Revision 0.

Permit Writers Manual, Washington State Department of Ecology, Procedures for Writing Effluent Discharge Permits, Water Quality Program, Publication Number 92-109.

Water Quality Standards for Ground Waters of the State of Washington, Chapter 173-200 WAC, issued 10/31/90.

State Waste Discharge Permit Program, Chapter 173-216 WAC, issued 10/19/90.

Environmental Protection Agency (EPA), 1989, Statistical Analysis of Ground-Water Monitoring Data at RCRA Facilities - Interim Final Guidance, PB89-151047, U.S. Environmental Protection Agency, Washington, D.C.

EPA, Office of Water (EN-336), March 1991, Technical Support Document for Water Quality-based Toxics Control, EPA/505/2-90-001, PB91-127415.

Washington State Department of Ecology, Toxics Cleanup Program, Implementation Memo No. 3, November 1993, No. 93-100.

Washington State Department of Ecology, Model Toxics Control Act, Cleanup Levels and Risk Calculation (CLARC II) Update, August 31, 1994, Publication No. 94-145.

Hanford Federal Facility Agreement and Consent Order, Fourth Amendment, January 1994, by Washington State Department of Ecology, U.S. Environmental Protection Agency, U.S. Department of Energy, No. 89-10 Rev. 3.

APPENDIX B - PUBLIC INVOLVEMENT INFORMATION

Ecology has tentatively determined to issue a State Waste Discharge Permit to the Applicant listed in section 2.0 of this fact sheet. The draft permit contains conditions, and limits on the concentrations of certain constituents in the effluent and the groundwater which are described in this fact sheet.

Public notice of application was published on October 16, 1994, in the Seattle Times-Post Intelligencer, Tri-City Herald, Spokane Spokesman-Review, Portland Oregonian, and Hood River Chronicle and on October 17, 1994, and October 24, 1994, in the Tri-City Herald to inform the public that an application had been submitted, and to invite comment on the issuance of the permit.

Ecology will publish a public notice of draft permit on March 5, 1995, in the Seattle Times-Post Intelligencer, Tri-City Herald, Spokane Spokesman-Review, Portland Oregonian, and Hood River Chronicle to inform the public that a draft permit and fact sheet are available for review. Interested persons will be invited to submit written comments regarding the draft permit. The draft permit, fact sheet, and related documents will be available for inspection and copying between the hours of 8:00 a.m. and 5:00 p.m. weekdays by appointment, at the Ecology office listed below. Written comments should also be mailed to:

Ms. Melodie Selby, P.E.
Unit Supervisor
Nuclear Waste Program
Washington State Department of Ecology - Kennewick Office
1315 W. 4th Avenue
Kennewick, WA 99336-6018

Any interested party may comment on the draft permit within the thirty (30) day comment period by writing to the individual at the above address. Ecology will hold a hearing regarding this permit. Public notice regarding the hearing will be circulated at least thirty (30) days in advance. Individuals expressing an interest in this permit will be mailed an individual notice.

Ecology will consider all comments received in formulating a final determination to issue, revise, or deny the permit. Ecology's response to all significant comments is available upon request and will be mailed directly to people expressing an interest in this permit.

Further information can be obtained from Ecology by contacting Ms. Melodie Selby at (509) 736-3021, or by writing her at the address listed above.

APPENDIX C - TECHNICAL METHODOLOGY

The following equation was used to calculate the theoretical concentration at which a carcinogen would cause an increased risk of one additional cancer case in every one million persons exposed.

$$\text{Groundwater criteria, ppb} = \frac{\text{RISK x BW x LIFE x UCF}}{\text{CPF x DWIR x DUR}} = 0.08167/\text{CPF}$$

Where the terms are defined as follows:

RISK = human cancer risk level (1 in 1,000,000)
BW = body weight (70 kilograms)
LIFE = lifetime (70 years)
UCF = unit conversion factor (1,000 micrograms per milligram)
CPF = cancer potency factor from EPA's Integrated Risk Information System database.
DWIR = drinking water ingestion rate (2 liters per day)
DUR = duration of exposure (30 years)

Volatile carcinogens incorporate inhalation from showering as a potential exposure route by doubling the drinking water ingestion rate.

Five carcinogens are potentially present in the effluent. The effects were assumed to be additive, and the following equation was used:

$$\text{Maximum Concentration, ppb} = 1/n\ 0.08167/\text{CPF}(1) + 1/n\ 0.08167/\text{CPF}(2) + \ldots 1/n\ 0.08167/\text{CPF}(n)$$

which estimates a total risk of 1 in 1,000,000.

This theoretical calculation resulted in a concentration of 2.71 ppb, which is a much lower concentration than reliably measurable by laboratories (the summed PQLs). Hence, this evaluation did not result in modification of enforcement limits.

APPENDIX D - GLOSSARY OF TERMS

Alluvium - sedimentary material deposited by flowing water, as in a riverbed or delta.

Biochemical Oxygen Demand - an indirect laboratory measurement of the quantity of organic material present in an effluent that is utilized by bacteria.

Caliche - a hard soil layer cemented by calcium carbonate and found in deserts and other arid or semiarid regions.

Confidence Interval - a statistical range with a specified probability (ex. 95%) that a given parameter lies within the range.

Lognormal - of, pertaining to, or being a logarithmic function with a normal distribution; where a logarithmic function is an exponential one, and a normal distribution is represented by a bell-shaded curve that is symmetrical about the statistical mean.

pH - a measurement of the acidity or alkalinity of a liquid. A pH of 7 is defined as neutral, and large variations above or below this value are considered harmful to most aquatic life.

Gross Alpha - a measurement of radioactive decay of an atomic nucleus by emission of an alpha (positively charged) particle.

Gross Beta - a measurement of radioactive decay of a high-speed electron or positron.

APPENDIX E - SCHEMATIC FLOW DIAGRAM OF THE TREATMENT SYSTEM AT THE PLUTONIUM FINISHING PLANT FOR EFFLUENT DISCHARGING TO THE 200 AREA TREATED EFFLUENT DISPOSAL AREA

Facility: 200 Area TEDF

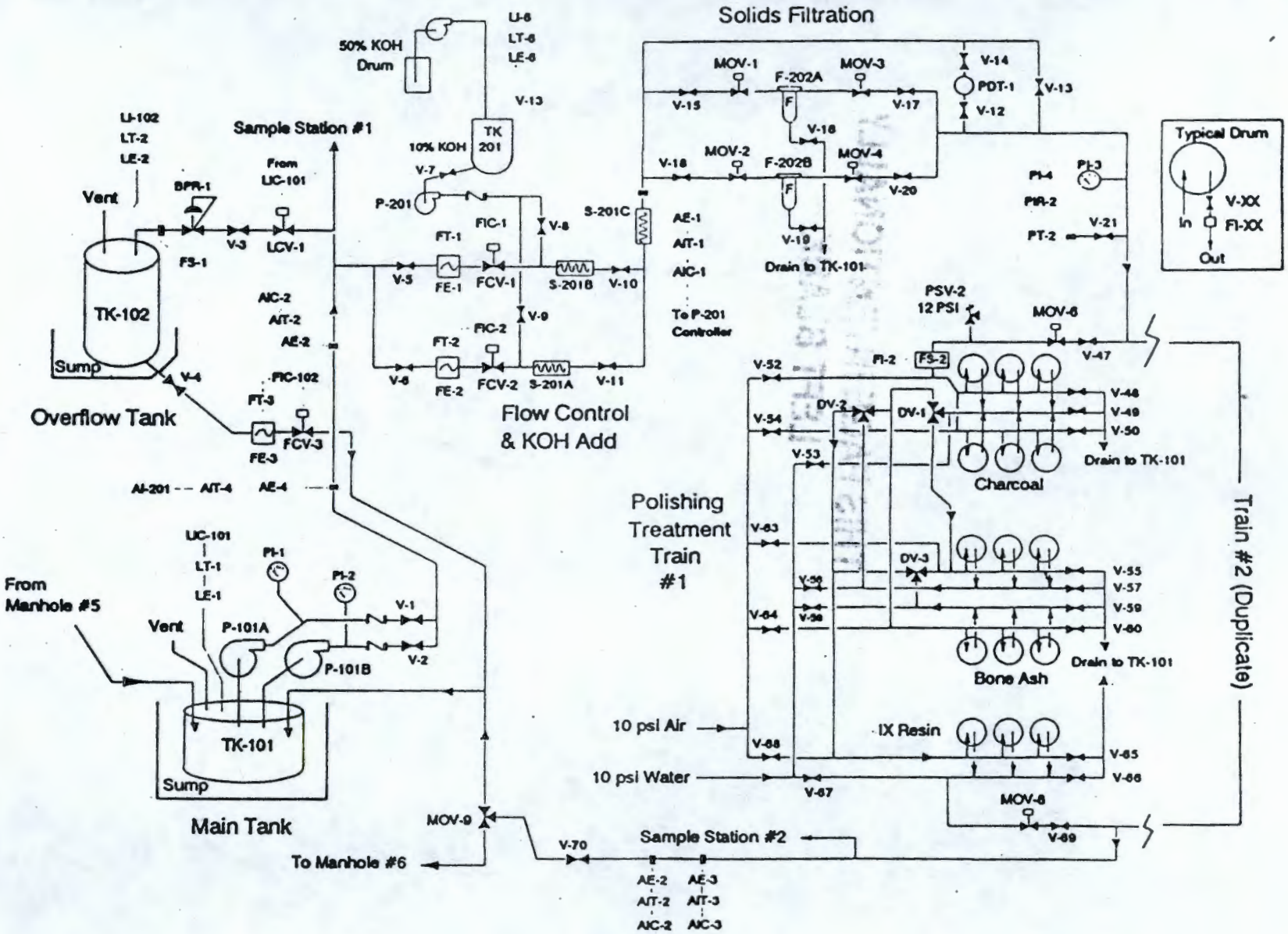

Figure 3. Schematic Flow Diagram for the Waste Water Treatment System.

THIS PAGE INTENTIONALLY
LEFT BLANK