0006081

START

DOE/RL 88-27
Addendum 1

Grout Treatment Facility Dangerous Waste Permit Application

Drawings

Date Published
September 1989

9011775028 5

United States
Department of Energy
P.O. Box 550
Richland, Washington 99352

This page intentionally left blank.

CONTENTS

Drawing Number/Sheets	Title
*H-2-77574	Civil Site Plans
H-2-77575 Sheets 1-2	Civil FDN Excavation & Diffusion Barrier
H-2-77576	Civil Diffusion Barrier & Initial Backfill
*H-2-77578	Civil Diffusion Barrier & Shielding Backfill
H-2-77579 Sheets 1-2	Civil Excavation Plan Vaults 102, 103, 104 & 105
*H-2-77580 Sheets 1-4	Civil Concrete Vault Plan
*H-2-77581 Sheets 1-2	Civil Vault Roof Plan
H-2-77582	Civil Ext Drainage Path Plan Sect & Det
*H-2-77583	Civil Liner Plan Section & Details
H-2-77584	Civil Vault Pit Plan Sections & Details
H-2-77585	Civil Vault Pit Details
H-2-77586 Sheets 1-2	Civil Leachate Pit Plan Sections & Details
*H-2-77587 Sheets 1-2	Civil Penetration Plan Vault 102
H-2-77588 Sheets 1-5	Civil Vault Isolation Vault 102 Plan
H-2-77590	Civil Excess Water Pit Plan Sections & Details
H-2-77591	Civil Excess Water Pit Cover Blocks
*H-2-77593 Sheets 1-3	Civil Concrete Basin Plan
*H-2-77596 Sheets 1-2	Piping Plan
H-2-77597	Piping Miscellaneous Details
*H-2-77598	Piping Support Plan
*H-2-77599	Piping Support Details
*H-2-77600	Piping Jumper Arrgt Vault Pit
*H-2-77601	Piping Vault Pit Section & Details
*H-2-77602 Sheets 1-2	Piping Jumper Arrgt Excess Wtr Pmp Pit
*H-2-77605 Sheets 1-3	Piping Leachate Coll Sump Liner Plan, Sect, & Det
*H-2-77608	Piping Drain Seal Assembly & Details
H-2-77609	Piping Hose Handle Details
H-2-77610	Piping Pit Cover Painting Diagrams
*H-2-77611 Sheets 1-2	Piping Plan & Details
*H-2-77612	Piping Leachate Pump Pit Jmpr Arrgt/Jmpr Assy
*H-2-77615	Piping Hydraulic Diag
*H-2-77618 Sheets 1-12	Piping & Instm Diagram Underground Vault
*H-2-77619 Sheets 1-2	Instm Vault Mtd Instm Instl Details
*H-2-77620 Sheets 1-2	Instm Vault Mtd Instm T/C Assembly
H-2-77621 Sheets 1-2	Instm CASS Alarm Interface Connection Diagram
*H-2-77634	Electrical Site Plan
*H-2-77635 Sheets 1-2	Electrical Vault Plan 218-E-16-102
H-2-77636 Sheets 1-4	Electrical Elem & Conn Diag Vault 102
H-2-77637	Electrical Terminal Box Details
H-2-77638 Sheets 1-3	Electrical Manhole & Conduit Details
H-2-77639 Sheets 1-2	Electrical Leachate Control Sta 102 Details
H-2-77640	Electrical Elem Diag Leak Det Ann
H-2-77641	Electrical Wire Run list
H-2-77642 Sheets 1-2	Electrical Conn Schedule Vault 218-E-16-102
H-2-77643 Sheets 1-2	Electrical Terminal Box Connection Diag
*H-2-77645 Sheets 1-2	Electrical Cathodic Protection Plan
H-2-77646	Electrical Cathodic Protection Details
H-2-77647	Electrical Cathodic Protection Details
H-2-77648	Electrical Cathodic Protection Details

*Revision of earlier version submitted in DOE/RL 88-27 Appendix 4A on 11/23/88. All other drawings are being submitted for the first time.

This page intentionally left blank.

9 0 1 1 7 7 3 0 2 9 8

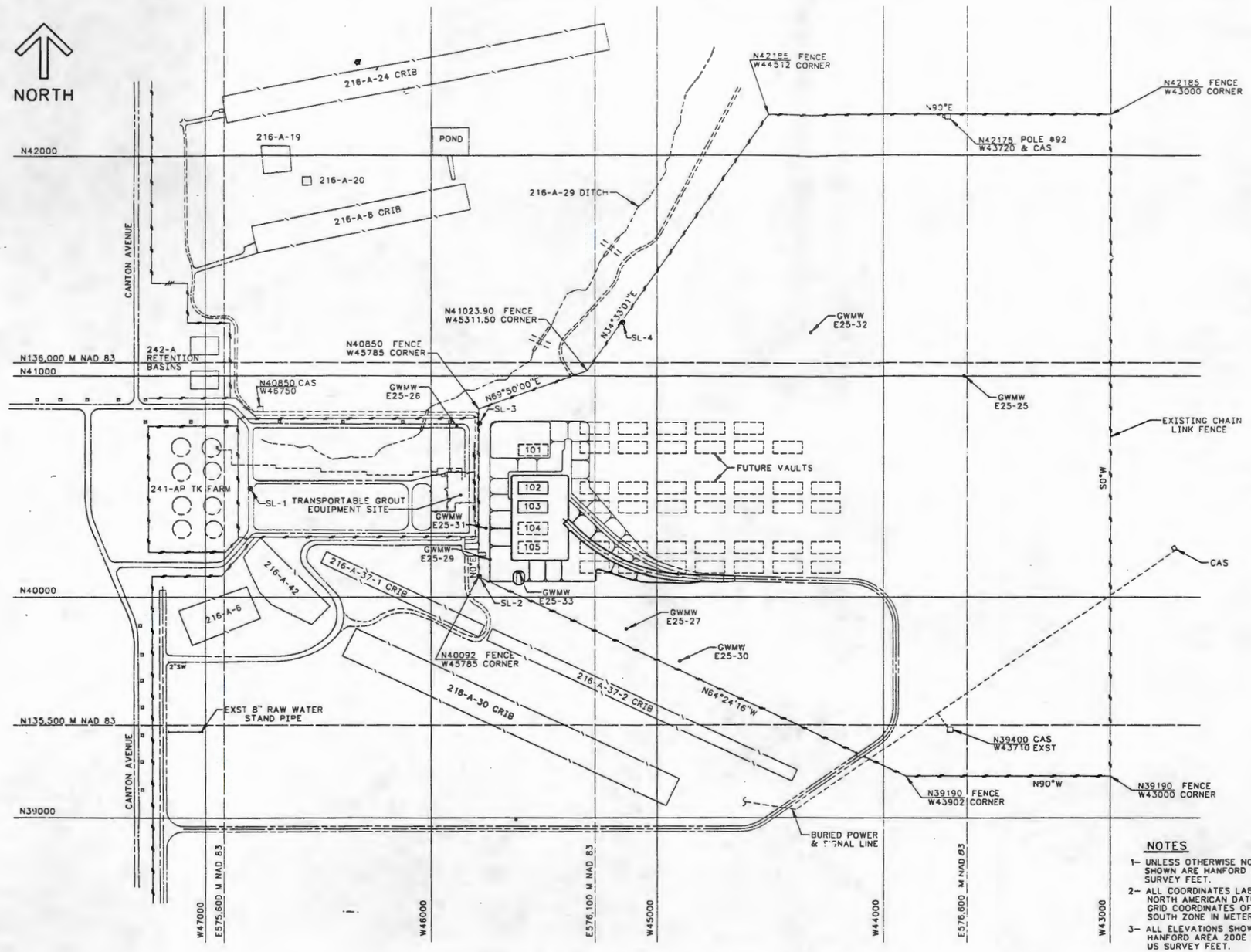

218-E-16 GROUTED WASTE DISPOSAL SITE

FOR CONTRACTOR INFORMATION ONLY

LEGEND

- CHAIN LINK FENCE
- SWING GATE
- SLIDE GATE
- • GWMW GROUND WATER MONITORING WELLS, EXST
- ● SURVEY MONUMENT, SL-X
- □ CONTINUOUS AIR SAMPLER, CAS, EXST
- ▫ STREET LIGHT
- M METERS

EXSTING SURVEY MONUMENT LOCATIONS

MONUMENT	HANFORD PLANT COORDINATES	NAD 83 COORDINATES	ELEVATIONS	DESCRIPTION
SL-1	N:40,490.94 W:46,774.70	N:135,826.274 M E:575,636.825 M	678.60	ALUMINUM CAP
SL-2	N:40,094.22 W:45,782.84	N:135,706.216 M E:575,939.450 M	672.55	ALUMINUM CAP
SL-3	N:40,785.12 W:45,782.04	N:135,916.779 M E:575,939.101 M	667.30	ALUMINUM CAP
SL-4	N:41,244.36 W:45,151.52	N:136,057.280 M E:576,130.871 M	666.35	ALUMINUM CAP

EXISTING GWMW LOCATIONS

WELL NO	HANFORD PLANT COORDINATES	
	NORTH	WEST
E25-25	N41002	W43648
E25-26	N40773	W45884
E25-27	N39855	W45136
E25-29	N40170	W45735
E25-30	N39710	W44900
E25-31	N40311	W45753
E25-32	N41200	W44325
E25-33	N40116	W45609

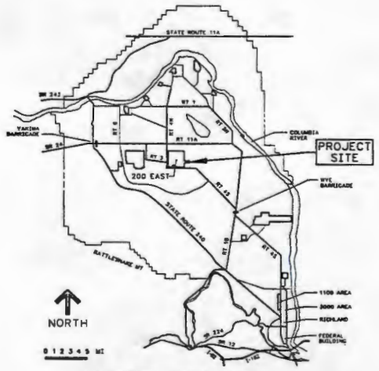

HANFORD AREA MAP

NOTES

1- UNLESS OTHERWISE NOTED ALL COORDINATES SHOWN ARE HANFORD PLANT GRID IN US SURVEY FEET.

2- ALL COORDINATES LABELED AS NAD 83 ARE NORTH AMERICAN DATUM OF 1983, LAMBERT GRID COORDINATES OF THE WASHINGTON SOUTH ZONE IN METERS.

3- ALL ELEVATIONS SHOWN ARE BASED ON HANFORD AREA 200E DATUM IN US SURVEY FEET.

OFFICIAL RELEASE BY WHC DATE APR 04 1989

EDT = 101089

IMPACT LEVEL 3

WHC APPROVAL BY	DATE 11-14 1988	U.S. DEPARTMENT OF ENERGY RICHLAND OPERATIONS OFFICE KAISER ENGINEERS HANFORD COMPANY
PROJ ENGR	11-14 1988	M CIVIL SITE PLAN
DR JE BREED	4-12 1988	
APPROVED BY WJM RW ITEN	4-12 1988	
SAFETY D PARTHREE	4-8 1988	
APPROVED BY WJM D LIEN	4-8 1988	PROJECT TITLE GROUT VAULT PAIR (218-E-16-102 & 103)
CHECKED BY PA LAING	4-8 1988	PROJ B-714 WO ER9090 JOB
DRAWN BY RC CROSKREY	1-7 1988	SCALE 1"=200' BLDG 218-E-16 INDEX 0110
DESIGNED BY WJ MACRUDER	1-7 1988	DRAWING NUMBER H-2-77574 SHEET 1 OF 1 REV 0

BY-DATE	BY-DATE	REV BY DATE	DESCRIPTION	REV
APPROVAL	KEH APPROVAL		REVISIONS	
COMMENT REVIEW				

MICROFILMED

NUMBER	TITLE	NUMBER	TITLE
DRAWING TRACEABILITY LIST		NEXT USED ON	

DRAWING LIST REFERENCES

120101200.4

C 01/03/89

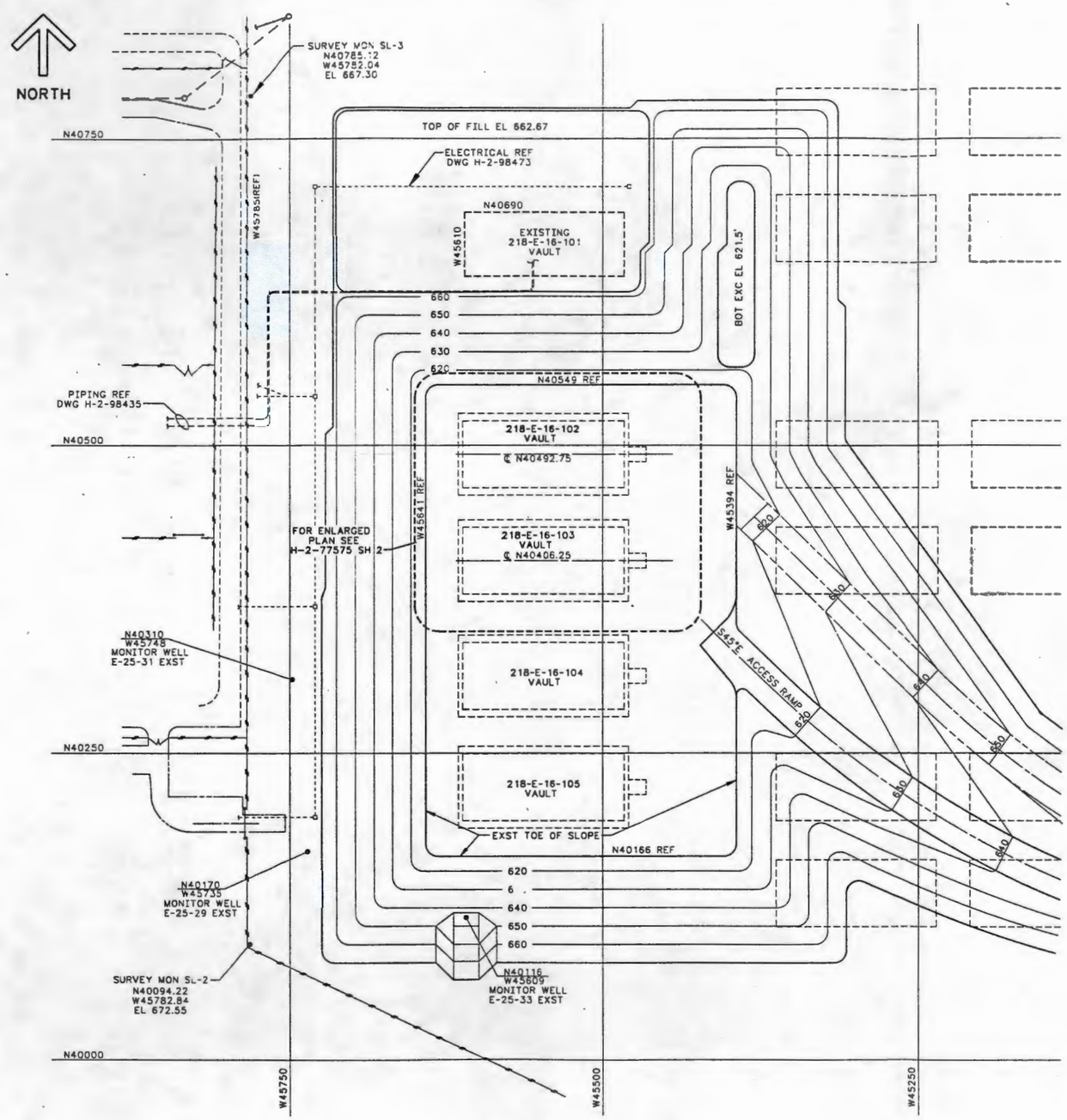

PLAN

SCALE 1"=40'

GENERAL NOTES

1- FOR GEOTEXTILE REQUIREMENTS SEE SPECIFICATION B-714-C2, SECTION 02145

2- EXCAVATION TOLERANCES:
ELEVATIONS SHALL HAVE A TOLERANCE OF +0.0, -0.2 FEET.

3- EARTHMOVING EQUIPMENT PRODUCING SURCHARGE LOADS GREATER THAN THOSE PRODUCED BY A D9 CATERPILLER, A 50 TON DUMP TRUCK OR A 22 CUBIC YARD SCRAPER SHALL NOT BE USED WITHIN 8 FEET OF VAULT OR CATCH BASIN.

4- FOR ASPHALTIC CONCRETE PAVEMENT REQUIREMENTS SEE SPECIFICATION B-714-C2, SECTION 02512.

4/6/89

EDT # 10663

INPACT LEVEL 3

WHC SR BRIGGS	DATE 4-6-89	U.S. DEPARTMENT OF ENERGY RICHLAND OPERATIONS OFFICE
		KAISER ENGINEERS HANFORD COMPANY
PROJ JD CLOUD	12-28 1988	CIVIL FDN EXCAVATION & DIFFUSION BARRIER
DR JE BREED	6-19 1988	
APPROVED BY WJM RM ITEN	6-19 1988	
SAFETY SC ASHWORTH D PARTHREE	6-19 1988	
APPROVED BY WJM EA COAKEY	6-19 1988	PROJECT TITLE GROUT VAULT PAIR (218-E-16-102 & 103)
CHECKED BY WJ MACRUDER	6-5 1988	PROJ B-714 NO ER9090 JOB
DRAWN BY RC CROSKREY	1-3 1988	SCALE SHOWN BLDG 218-E-16 INDEX 0110
DESIGNED BY RC CROSKREY	1-3 1988	DRAWING NUMBER H-2-77575 SHEET 1 OF 2 REV 1

NUMBER	TITLE
	DRAWING TRACEABILITY LIST

NUMBER	TITLE
H-2-77579	CIVIL EXCAVATION PLAN
H-2-77573	DRAWING LIST
	REFERENCES
NEXT USED ON H-2-77575 SH 2	

REV	DESCRIPTION	REV BY DATE	BY-DATE	APPROVAL
1	GEN REV PER ECN B-714-6	DJH 3-20 1989	JDC	KEH APPROVAL

REVISIONS

COMMENT REVIEW

MICROFILMED

KEDRAD

H2775750 E 04/05/89

9 0 2 0 9 0

9 1 1 1 0 6

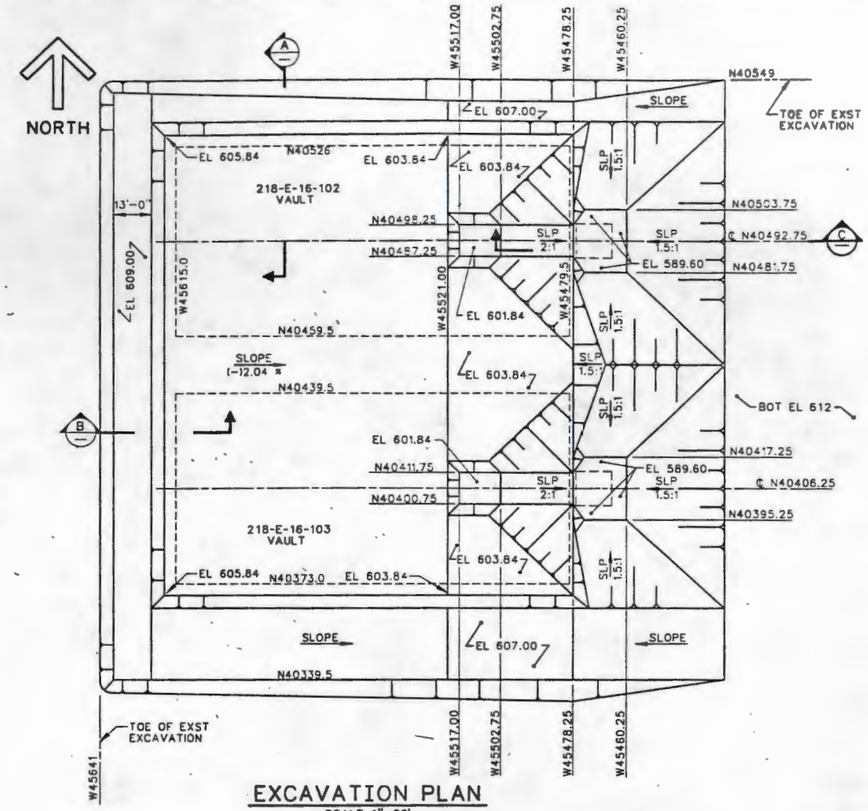

EXCAVATION PLAN
SCALE 1"=20'

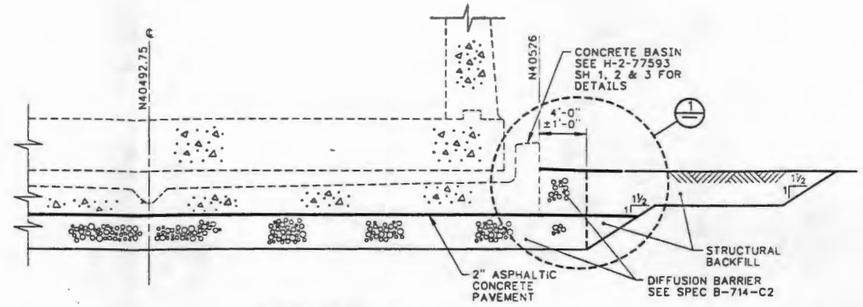

SECTION A
SCALE 1"=5'

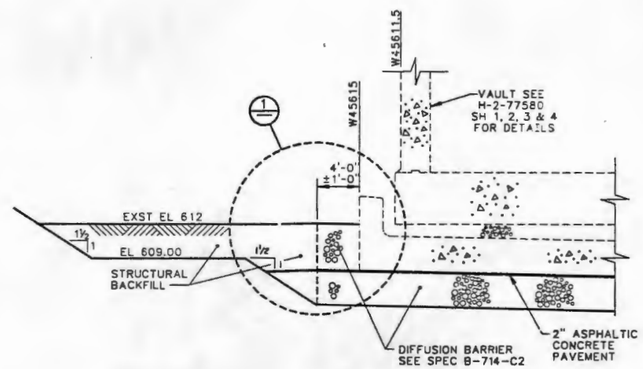

SECTION B
SCALE 1"=5'

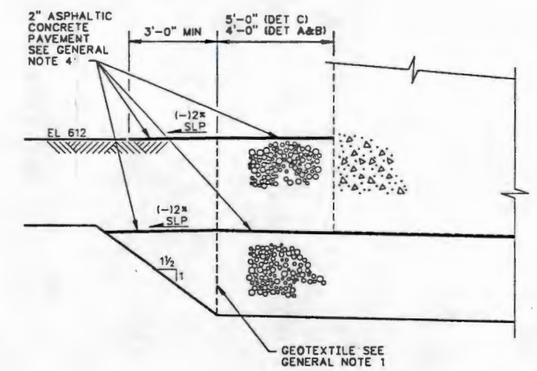

DETAIL 1
SCALE 1"=2'

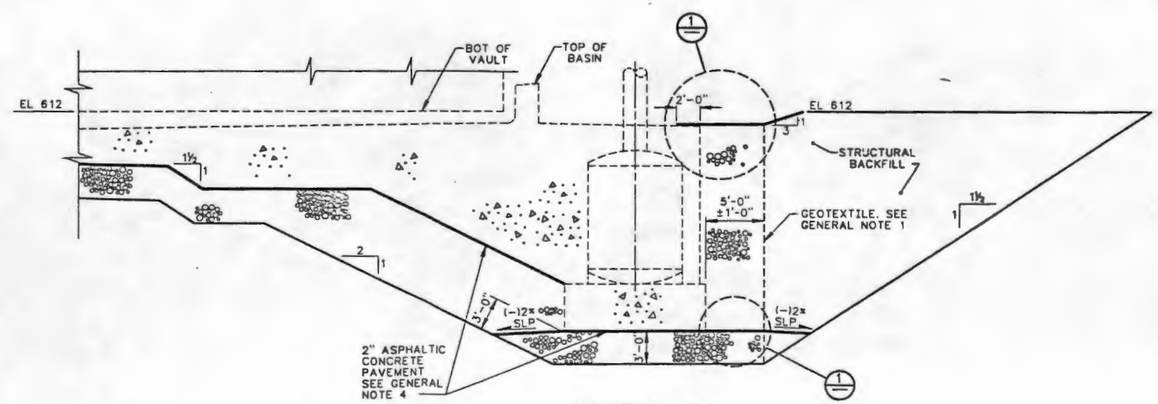

SECTION C
SCALE 1"=5'

FOR GENERAL NOTES SEE DWG H-2-77575 SH 1

HOLD- ALL GRAVEL DIFFUSION BARRIER MATERIAL & PLACEMENT B-714-001

4/6/89

EDT # 101663

IMPACT LEVEL 3

WHC APPROVAL BY SR BRIGGS	DATE 4/6/89	U.S. DEPARTMENT OF ENERGY RICHLAND OPERATIONS OFFICE
PROJ ENGR D CLOUD	12-28 1988	KAISER-ENGINEERS HANFORD COMPANY
BA JE BREED	6-19 1988	CIVIL FDN EXCAVATION & DIFFUSION BARRIER
APPROVED BY WJM RM ITEN	6-19 1988	
SAFETY BY SC ASHWORTH D PARTHREE	6-19 1988	PROJECT TITLE GROUT VAULT PAIR (218-E-16-102 & 103)
APPROVED BY WJM EA COAKEY	6-19 1988	PROJ B-714 / WO ER9090 / JOB
CHECKED BY WJ MAGRUDER	6-19 1988	SCALE SHOWN / BLDG 218-E-16 / INDEX 0110
DRAWN BY RC CROSKREY	1-3 1989	DRAWING NUMBER H-2-77575 / SHEET 2 / OF 2 / REV 1
DESIGNED BY RC CROSKREY	1-3 1989	

REV	DESCRIPTION	REV BY DATE	APPROVAL
1	GEN REV PER ECN B-714-6	DJW 3-20 1989	KEH APPROVAL

REVISIONS

COMMENT REVIEW

NUMBER	TITLE
H-2-77579	CIVIL EXCAVATION PLAN
H-2-77573	DRAWING LIST

DRAWING TRACEABILITY LIST

NUMBER	TITLE

REFERENCES

NEXT USED ON

MICROFILMED

KEMSAC

H2775758: C 04/05/89

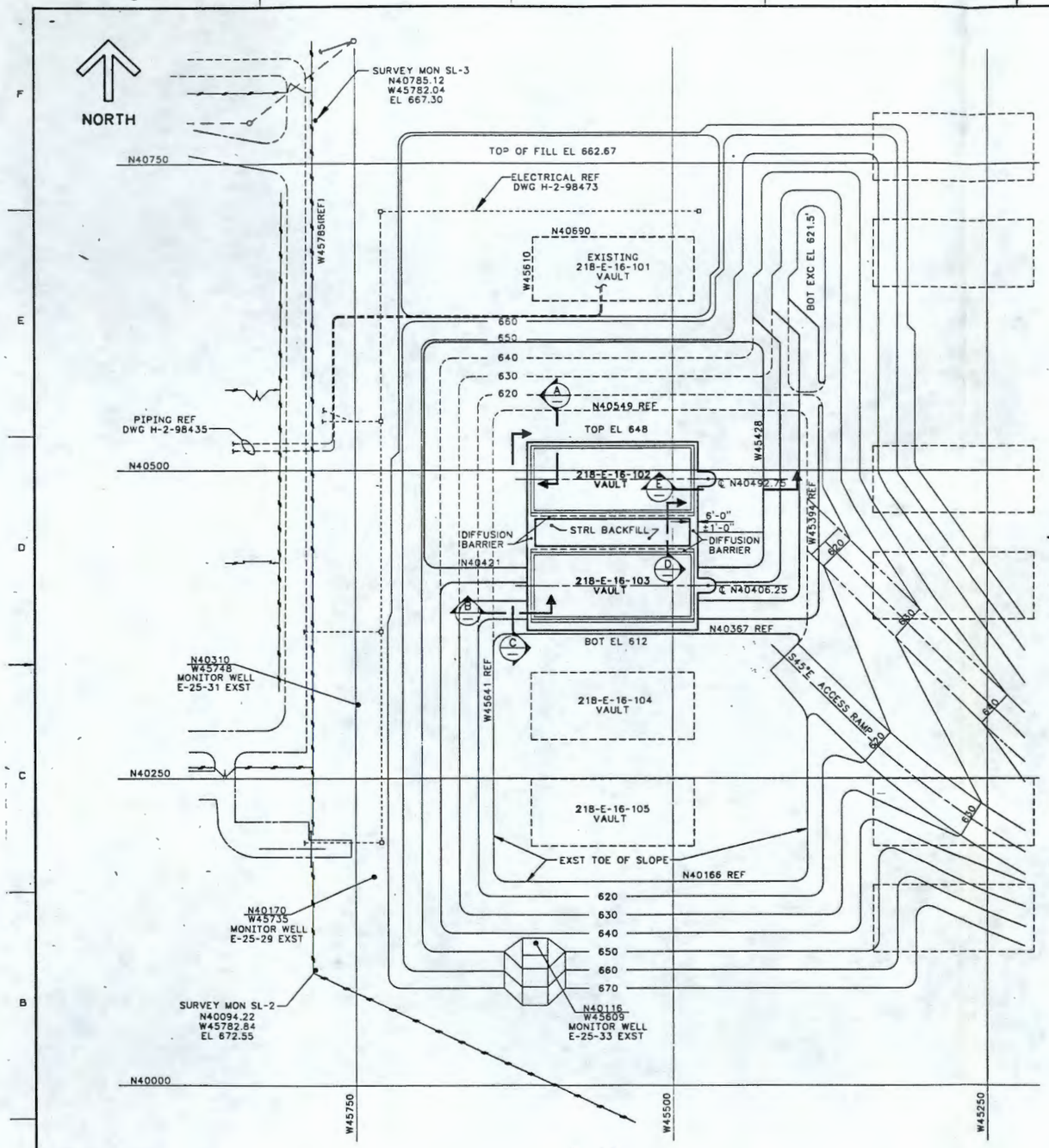

PLAN
SCALE 1"=40'

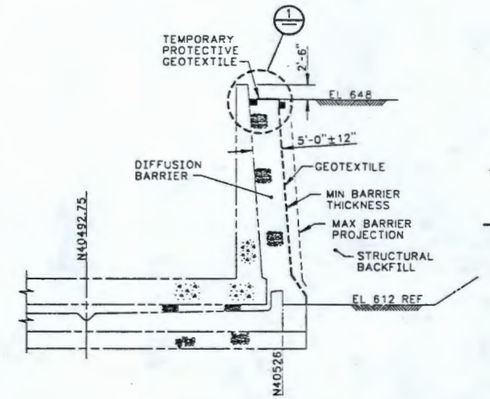

SECTION A
SCALE 1"=10'

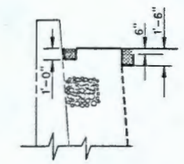

DETAIL 1
SCALE 1"=5'

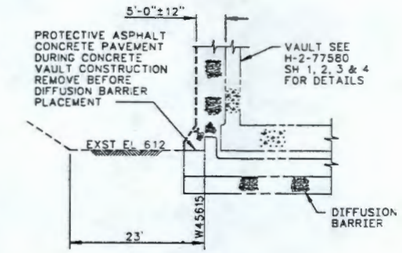

SECTION B
SCALE 1"=10'

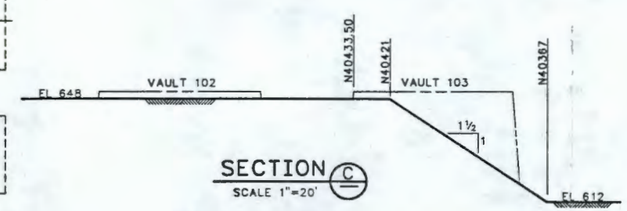

SECTION C
SCALE 1"=20'

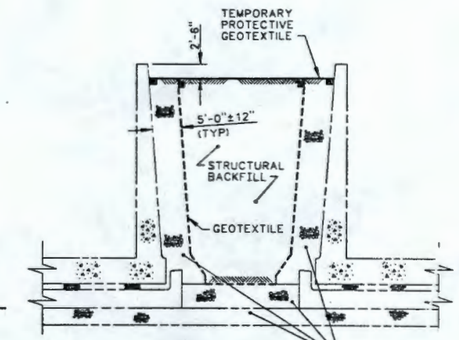

SECTION D
SCALE 1"=10'

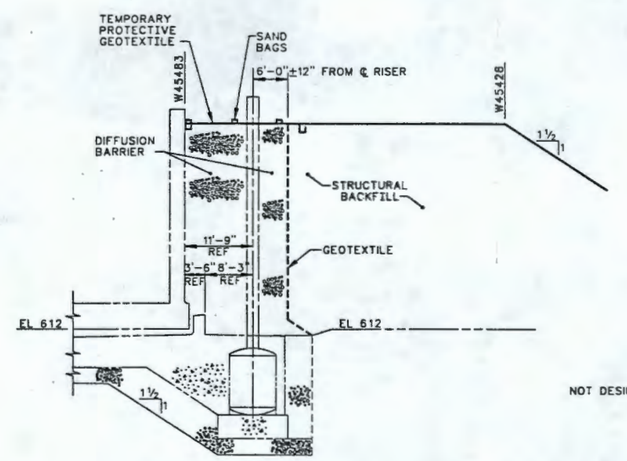

SECTION E
SCALE 1"=10'

GENERAL NOTES

1- FOR GEOTEXTILE REQUIREMENTS SEE SPECIFICATION B-714-C2 SECTION 02145

2- PROTECT GEOTEXTILE WITH ¾"PLYWOOD OR ½" STEEL PLATE IN TRAFFIC AREAS.

3- EARTH MOVING EQUIPMENT PRODUCING SURCHARGE LOADS GREATER THAN THOSE PRODUCED BY A D9 CATERPILLAR, A 50 TON DUMP TRUCK, OR A 22 YARD SCRAPER SHALL NOT BE USED WITHIN 8 FEET OF THE VAULT WALLS.

NOT DESIGN VERIFIED

HOLD- ALL DIFFUSION BARRIER MATERIAL AND PLACEMENT B-714-001

OFFICIAL RELEASE DATE APR 14 1995

EOT # 102073

IMPACT LEVEL 2

WHC			U.S. DEPARTMENT OF ENERGY RICHLAND OPERATIONS OFFICE
			KAISER ENGINEERS HANFORD COMPANY
			M CIVIL DIFFUSION BARRIER & INITIAL BACKFILL
PROJECT TITLE			GROUT VAULT PAIR (218-E-16-102 & 103)
PROJ	B-714	WO	ER9090
SCALE	SHOWN	BLDG	218-E-15
DRAWING NUMBER	H-2-77576	SHEET 1	OF 1
REV	0		

NUMBER	TITLE
H-2-77579	CIVIL EXCAVATION PLAN
H-2-77573	DRAWING LIST

DRAWING TRACEABILITY LIST — REFERENCES — NEXT USED ON

BY-DATE	BY-DATE	REV BY DATE	DESCRIPTION	REV
APPROVAL	KEH APPROVAL			

REVISIONS

COMMENT REVIEW

MICROFILMED

KEH-CAD

H2775764 C 04/05/86

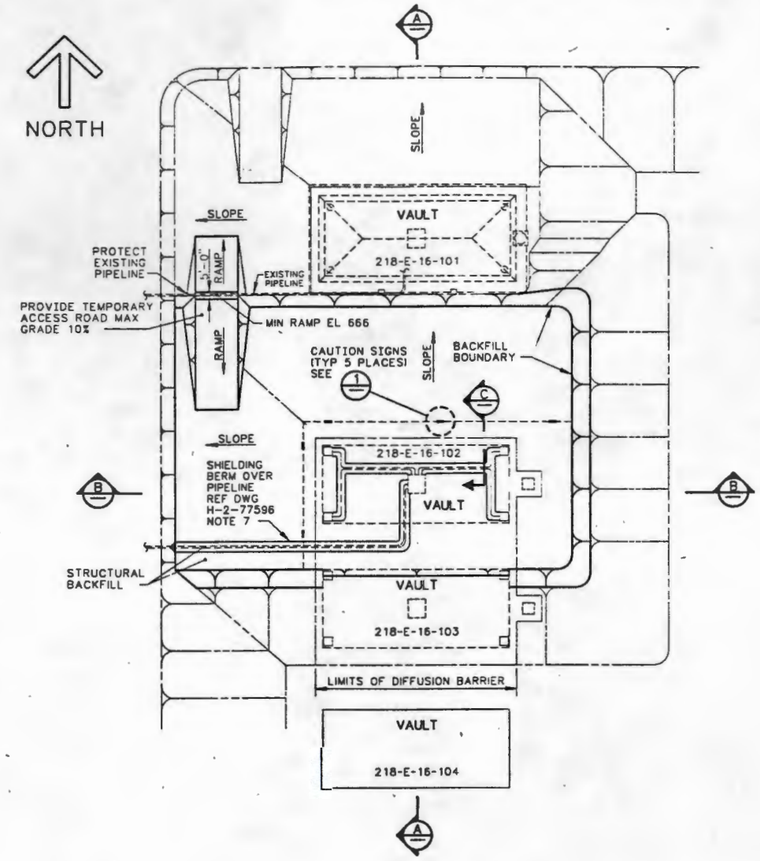

BACKFILL PLAN
SCALE 1"=40'

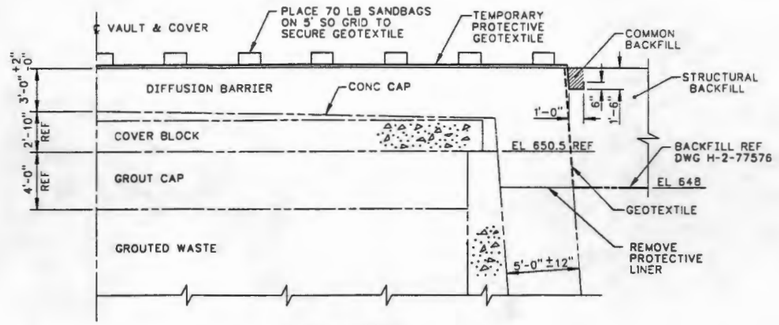

SECTION C
SCALE 1/4"=1'-0"

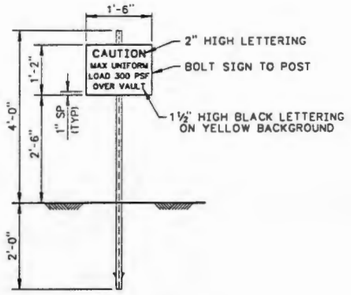

DETAIL 1
SCALE 3/4"=1'-0"

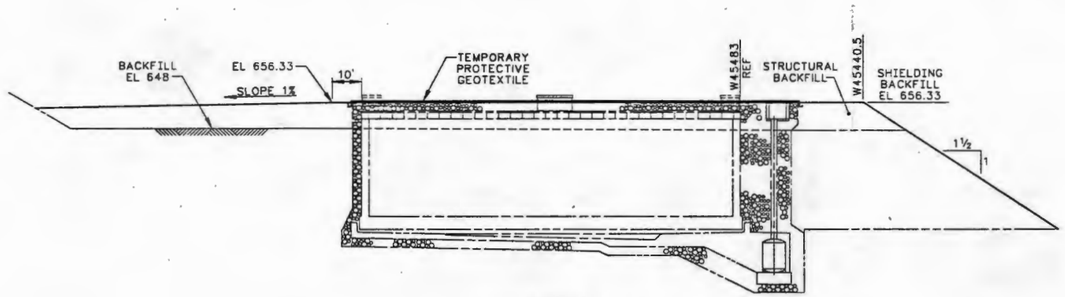

SECTION B
SCALE 1"=20'

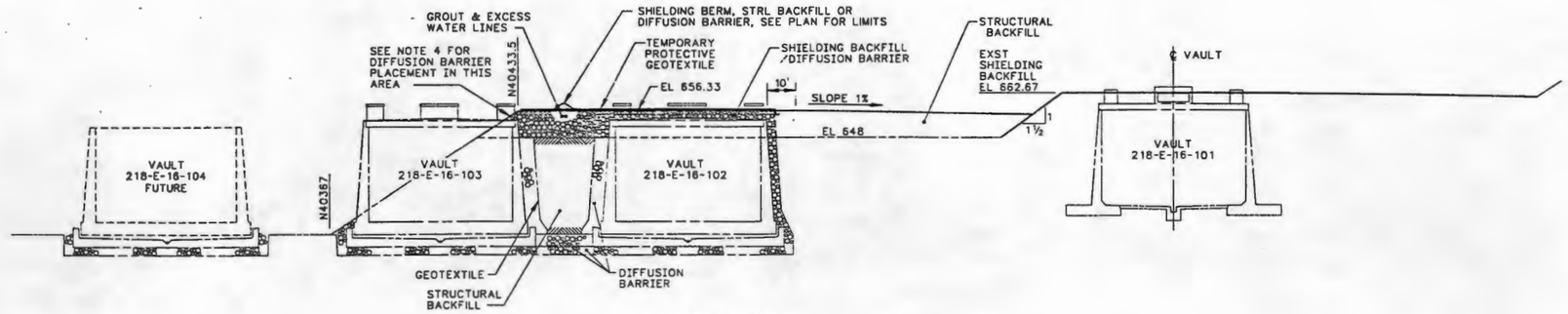

SECTION A
SCALE 1"=20'

GENERAL NOTES

1- FOR GEOTEXTILE REQUIREMENTS SEE SPECIFICATION B-714-C2, SECTION 02145

2- SEE DWG H-2-77587 FOR PIPE PENETRATIONS

3- PROTECT GEOTEXTILE WITH 3/4" PLYWOOD OR 1/2" STEEL PLATE IN TRAFFIC AREA.

4- PLACEMENT OF PRECAST COVER BLOCKS ON VAULT 103 IS REQUIRED PRIOR TO PLACEMENT OF DIFFUSION BARRIER HIGHER THAN ELEVATION 650.5 FEET.

NOT DESIGN VERIFIED

HOLD- ALL DIFFUSION BARRIER MATERIAL AND PLACEMENT B-714-001

DATE APR 14 1989

4/6/89

EOT # 102073
IMPACT LEVEL 2

DRAWING LIST		
H-2-77573		
NUMBER	TITLE	REFERENCES
		NEXT USED ON

DRAWING TRACEABILITY LIST

MICROFILMED	BY-DATE	BY-DATE	REV BY DATE	DESCRIPTION	REV
APPROVAL	KEH APPROVAL				
COMMENT REVIEW				REVISIONS	

WHC APPROVAL BY SR BRIGGS — DATE 12-28-1988

U.S. DEPARTMENT OF ENERGY
RICHLAND OPERATIONS OFFICE
KAISER ENGINEERS HANFORD COMPANY

PROJ ENGR MD CLOUD 12-28-1988
DR JE BREED 6-12-1989
APPROVED BY WJM RM ITEN 6-12-1989
SAFETY SC ASHWORTH / D PARTHREE 6-12-1989
APPROVED BY WJM EA GEAKEY 6-12-1989
CHECKED BY WJ MAGRUDER 7-12-1989
DRAWN BY RC CROSKREY 6-2-1989
DESIGNED BY RC CROSKREY 6-2-1989

M CIVIL
DIFFUSION BARRIER & SHIELDING BACKFILL

PROJECT TITLE GROUT VAULT PAIR (218-E-16-102 & 103)

PROJ B-714 WO ER9090 JOB
SCALE SHOWN BLDG 218-E-15 INDEX 0110
DRAWING NUMBER H-2-77578 SHEET 1 OF 1 REV 0

KEH-SAB

H277578A1 C 04/03/89

9011106 2177 0293

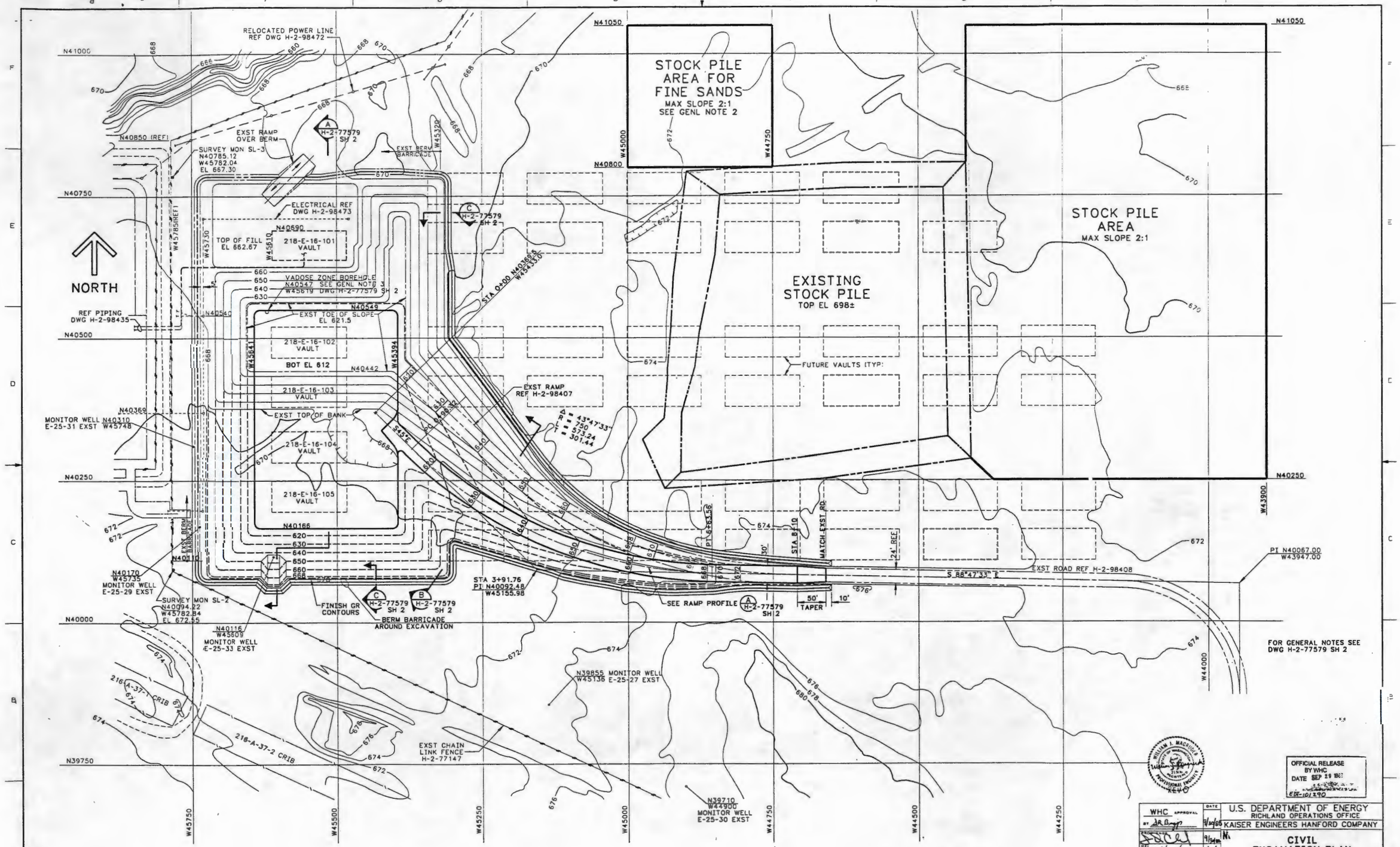

NUMBER	TITLE	NUMBER	TITLE
H-2-98408	CIVIL ROAD PLAN	H-2-77573	DRAWING LIST
H-2-98407	CIVIL EXCAVATION PLAN VAULT 101	REFERENCES	

DRAWING TRACEABILITY LIST — NEXT USED ON H-2-77579 SH 2

BY-DATE	BY-DATE	REV BY DATE	DESCRIPTION
APPROVAL	KEH APPROVAL		

REVISIONS — COMMENT REVIEW — MICROFILMED

WHC APPROVAL — DATE

U.S. DEPARTMENT OF ENERGY
RICHLAND OPERATIONS OFFICE
KAISER ENGINEERS HANFORD COMPANY

CIVIL EXCAVATION PLAN VAULTS 102, 103, 104 & 105

APPROVED	WJM / RM ITEN	8-19-1988
REVIEWED	SC ASHWORTH / D PARTRIDGE	8-19-1988
APPROVED	EA QUAKEY / WJM D LEN	8-18-1988
DESIGNED	PA LAING	3-8-1988
DRAWN	RC CROSKREY	2-5-1988
SURVEYED	WJ MACRUDER	2-5-1988

PROJECT TITLE: GROUT VAULT PAIR (218-E-16-102 & 103)

PROJ	PO	SDS
B-714	ER 1060	—
SCALE 1"=60'	BLDG 218-E-16	INDEX 0111

DRAWING NUMBER H-2-77579 — SHEET 1 — OF 2 — REV 0

KEH-CAD — H277579A1 C 09/26/88

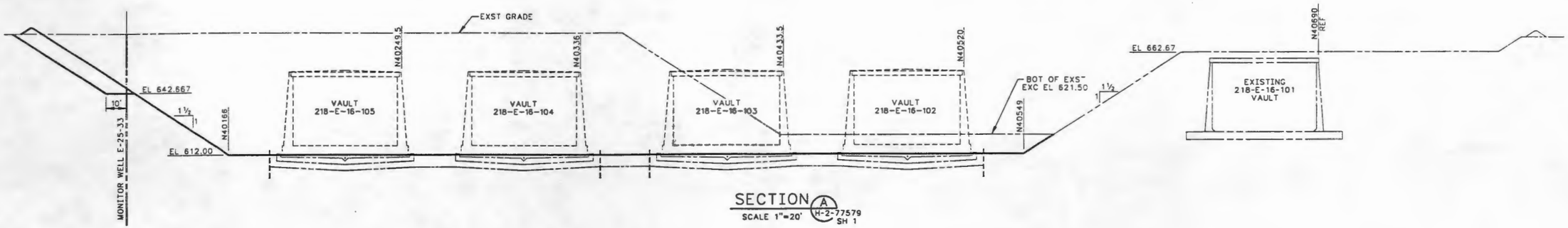

SECTION A
SCALE 1"=20' H-2-77579 SH 1

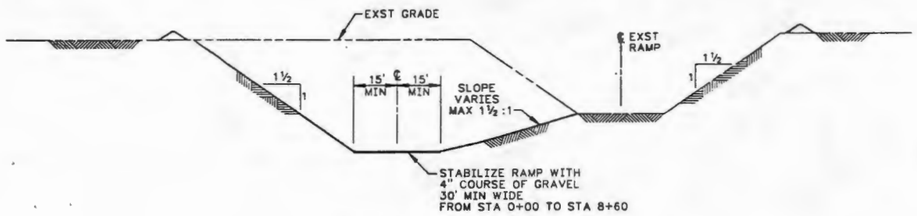

SECTION B
SCALE 1"=20' H-2-77579 SH 1

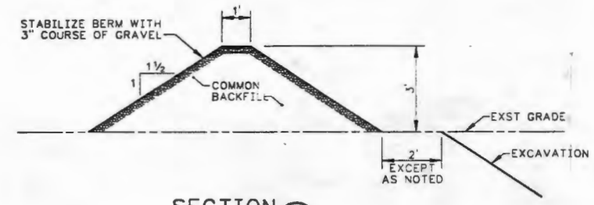

SECTION C
SCALE 1"=2' H-2-77579 SH 1

GENERAL NOTES

1- EXCAVATION TOLERANCES: HORIZONTAL DISTANCE & COORDINATES SHALL HAVE A TOLERANCE OF ±1 FOOT. ELEVATIONS SHALL HAVE A TOLERANCE OF ±0.2 FEET.

2- SEGREGATE 7500 CUBIC YARDS OF SILTY SANDS &/OR SAND-CLAY MIXTURES FROM EXCAVATION TO DESIGNATED STOCKPILE AREA. SEGREGATED MATERIAL SHALL BE CLASSIFIED AS SW BY THE UNITED SOIL CLASSIFICATION SYSTEM.

3- VADOSE ZONE BOREHOLE HAS BEEN BACKFILLED. A PORTION OF CASING WAS LOST BELOW GROUND SURFACE DURING REMOVAL. CUT AND REMOVE CASING IF ENCOUNTERED DURING EXCAVATION.

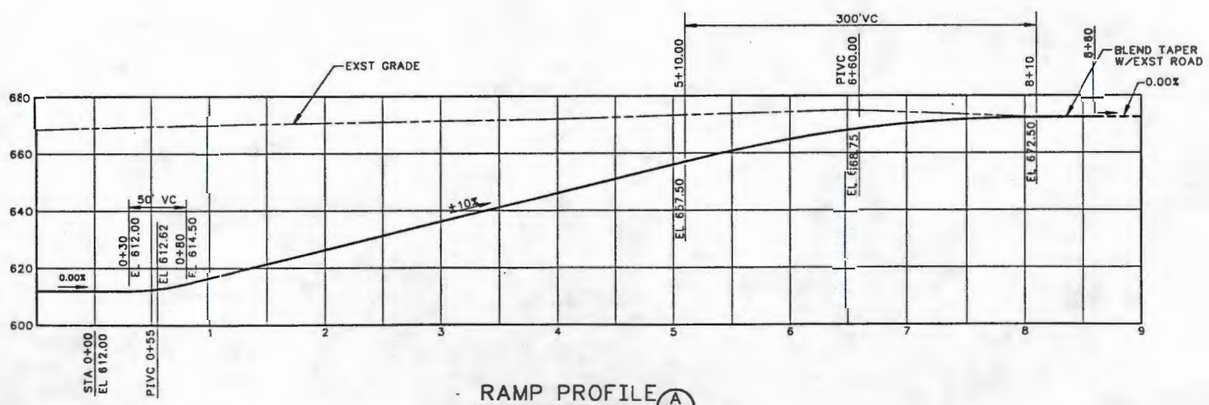

RAMP PROFILE
SCALE VERT 1"=20' HORIZ 1"=50' H-2-77579 SH 1

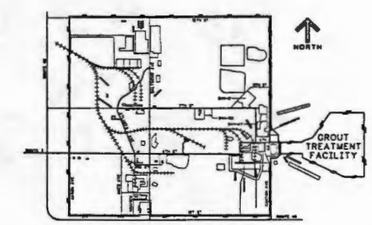

200 EAST AREA
KEY MAP

WILLIAM J. MAGRUDER STATE OF WASHINGTON 13304 REGISTERED PROFESSIONAL ENGINEER
REV 0

OFFICIAL RELEASE BY WHC
DATE SEP 29 1988
EDT-101290

WHC APPROVAL BY JRB	DATE 9/26/88	U.S. DEPARTMENT OF ENERGY RICHLAND OPERATIONS OFFICE	
PROJ ENGR	9/26/88	KAISER ENGINEERS HANFORD COMPANY	
APPROVED BY WJM RM ITEN	8-22 1988	CIVIL EXCAVATION SECTION & DETAILS	
SAFETY SC ASI-WORTH D PARTHREE	8-19 1988	PROJECT TITLE GROUT VAULT PAIR (218-E-16-102 & 103)	
APPROVED BY EA COAKEY WJM DG LIEN	8-19 1988	PROJ B-714	NO ER1060
CHECKED BY PA LAING	3-8 1988	SCALE SHOWN	BLDG 218-E-16
DRAWN BY RC CROSKREY	3-8 1988	DRAWING NUMBER H-2-77579	SHEET 2 / SV 2 / REV 0
DESIGNED BY WJ MAGRUDER	3-8 1988		

BY-DATE	BY-DATE	REV BY DATE	DESCRIPTION	REV
APPROVAL	KEH APPROVAL			
COMMENT REVIEW			REVISIONS	

MICROFILMED

NUMBER	TITLE
DRAWING TRACEABILITY LIST	

NUMBER	TITLE
H-2-77573	DRAWING LIST
REFERENCES	
NEXT USED ON END ITEM	

KEHAG

H2775794C
C 09/26/88

9 0 1 1 0 6 7 1 7 9 0 2 9 5

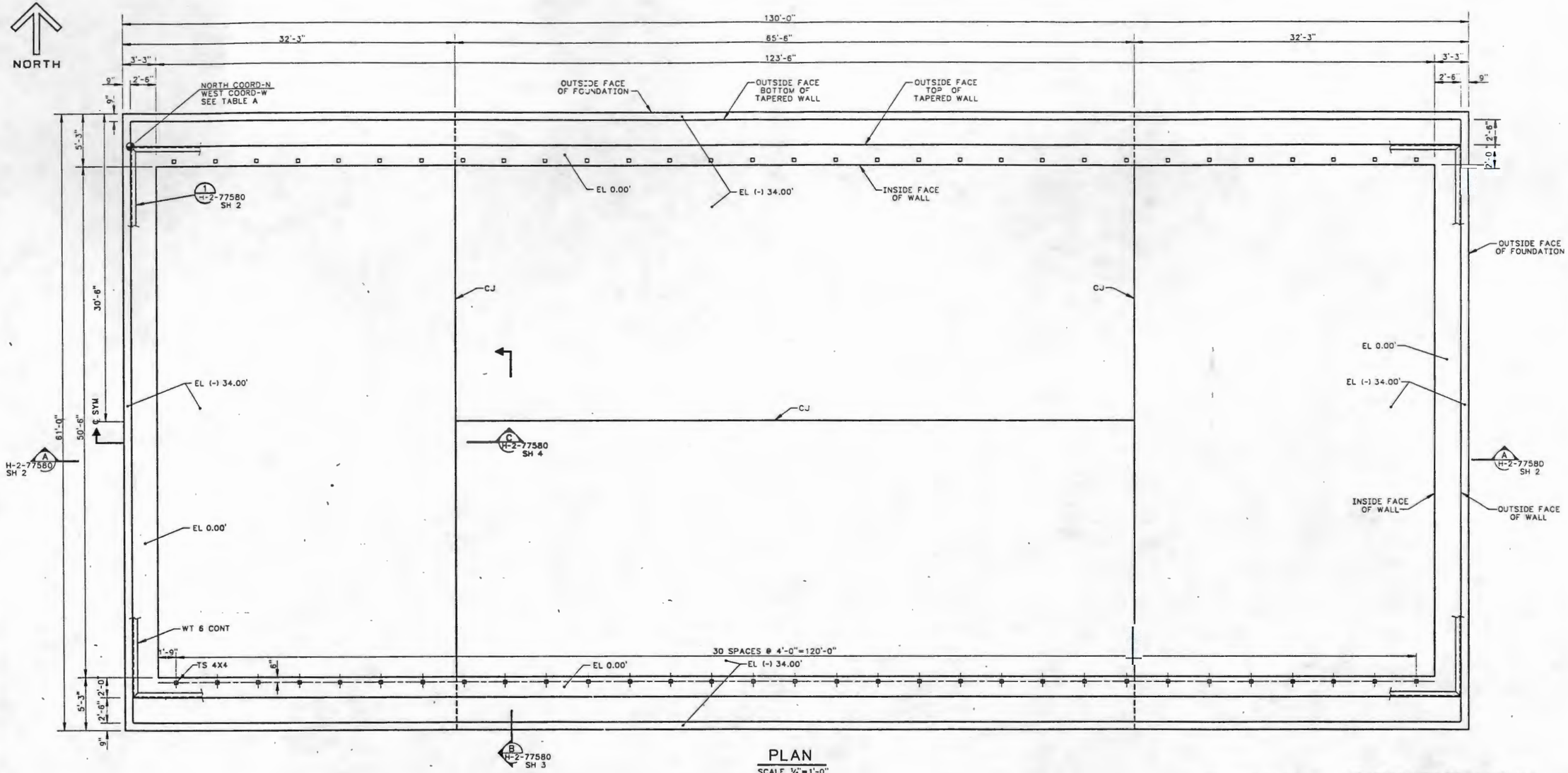

PLAN

SCALE 1/4"=1'-0"

NOT DESIGN VERIFIED

FOR GENERAL NOTES SEE H-2-77580 SH 2

HOLD- ENTIRE DRAWING FOR VERIFICATION OF THERMAL PROPERTIES USED IN THERMAL STRESS ANALYSIS B-714-002

FOR VAULT NUMBERS SEE DWG H-2-77574 SH1

TABLE A			
VAULT NO	NORTH COORD	WEST COORD	EL TOP OF CONC
102	N40520.00	W45611.50	650.50
103	N40433.50	W45611.50	650.50

EDGAR A. GOAKEY — STATE OF WASHINGTON — REGISTERED PROFESSIONAL ENGINEER

OFFICIAL RELEASE BY WHC DATE APR 14 1989

EOT # 103073

IMPACT LEVEL 2

WHC		U.S. DEPARTMENT OF ENERGY RICHLAND OPERATIONS OFFICE
SR BRIGGS		KAISER ENGINEERS HANFORD COMPANY
CLOUD		CIVIL CONCRETE VAULT PLAN
GR HENRICHSON		
WJM HP RAY	10-5 1988	
D PARTHREE		
WJM EA GOAKEY		PROJECT TITLE: GROUT VAULT PAIR (218-E-16-102 & 103)
JV EGGER		PROJ B-714 · NO ER9090 · JOB 0900,0901
RC CROSKREY		SCALE SHOWN · BLDG 218-E-16 · INDEX
EA GOAKEY		DRAWING NUMBER H-2-77580 · SHEET 1 · OF 4 · REV 0

NUMBER	TITLE	REFERENCES
H-2-77573	DRAWING LIST	

DRAWING TRACEABILITY LIST — NEXT USED ON

BY-DATE	BY-DATE	REV BY DATE	DESCRIPTION	REV
APPROVAL	KEH APPROVAL			

REVISIONS

MICROFILMED — COMMENT REVIEW

H277580A1 C 03/31/89

9011776029 6

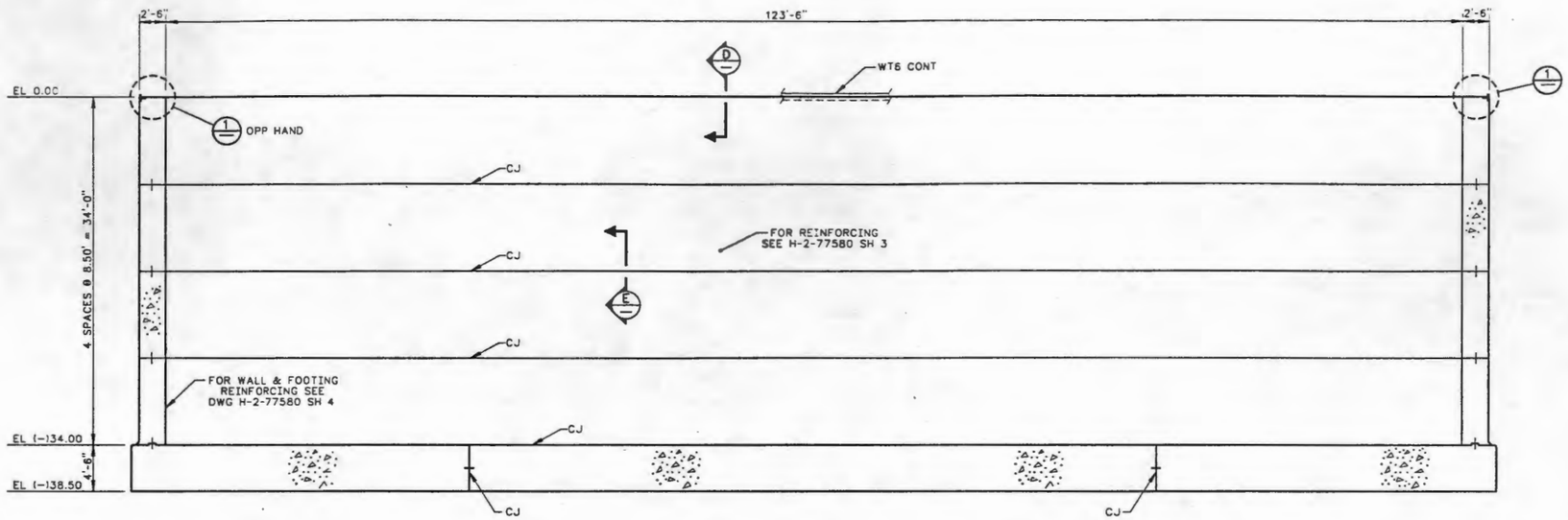

SECTION A
SCALE 3/16" = 1'-0" H-2-77580 SH 1

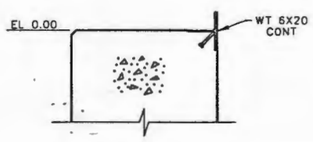

DETAIL 1
SCALE 1"=1'-0"

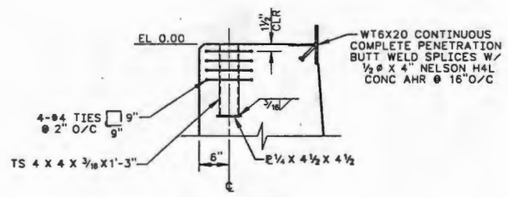

SECTION D
SCALE 1"=1'-0"

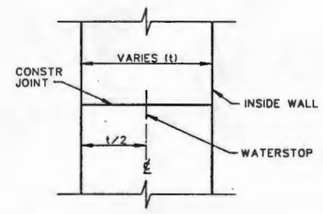

SECTION E
SCALE 1"=1'-0"

GENERAL NOTES

1- FOR CONSTRUCTION SPECIFICATION SEE B-714-C2, FOR CONCRETE USE SECTION 03301 VAULT AND BASIN CAST-IN-PLACE CONCRETE.

2- EL 0.00'= DATUM EL TOP OF CONC REF TABLE A ON H-2-77580 SH 1

3- DESIGN UNIT STRESSES:
CONCRETE F'c = 4000 psi @ 28 DAYS
REINF STEEL Fy= 60,000 psi
STRL STEEL Fy= 36,000 psi
WELDING ELECTRODES:
STRL STEEL E70xx
REINF STEEL E90xx

4- CONCRETE PROTECTION FOR REINFORCEMENT SHALL BE AS FOLLOWS UNLESS OTHERWISE NOTED:
FOOTINGS 3"CLR BOT & SIDES
WALLS & SLABS 2"CLR

5- ALL GROUT VAULT WALL REINFORCEMENT SHALL BE MADE CONTINUOUS BY BUTT WELDING OR MECHANICAL COUPLERS EXCEPT AS NOTED. (SEE DETAIL 1 ON H-2-77580, SH 3)

6- LAP SPLICES NOT OTHERWISE SHOWN SHALL CONFORM TO ACI 349-85 CLASS C SPLICE.

7- WELDING REINFORCING STEEL SHALL CONFORM TO AWS D1.4-79.

8- DESIGN CODES:
ACI 349-85 CODE REQUIREMENTS FOR NUCLEAR SAFETY RELATED CONCRETE STRUCTURES
ACI 350R-83 CONCRETE SANITARY ENGINEERING STRUCTURES
SDC-4.1 REV 10 STD ARCH-CIVIL DESIGN CRITERIA DESIGN LOADS FOR FACILITIES.

9- DESIGN LOADS:
SEISMIC SSE AND OBE PER SDC-4.1 CATEGORY 1.
LIVE 300 PSF SURCHARGE
SOIL:
GRAVITY 116 PCF
LATERAL P=116 K H
ACTIVE K = 0.23
AT REST K = 0.36
PASSIVE K = VARIES (SEE SOILS REPORT)
FLUIDS 62.4 PSF PER FT (HYDRO TEST)
THERMAL 90° MAX GROUT TEMP

10- WATERSTOPS REQUIRED AT ALL CONSTRUCTION JOINTS. SEE SPEC SECTION 05500 FOR WATERSTOP FABRICATION & INSTALLATION. STIRRUPS MAY BE OFFSET A DISTANCE OF ½ THE STIRRUP SPACING WHEN INTERFERING WITH WATERSTOP.

11- PLACE 6 MIL BLACK POLYETHYLENE SHEETING ON DRAINAGE GRAVEL PRIOR TO CONCRETE PLACEMENT.

HOLD- ENTIRE DRAWING FOR VERIFICATION OF THERMAL PROPERTIES USED IN THERMAL STRESS ANALYSIS B-714-002

NOT DESIGN VERIFIED

EDGAR A. GOAKEY STATE OF WASHINGTON 9813 REGISTERED PROFESSIONAL ENGINEER
4/3/89

OFFICIAL RELEASE BY WHC DATE APR 14 1989

EOT # 102073

IMPACT LEVEL 2

WHC APPROVAL BY SR BRIGGS	DATE 12-28-1988	U.S. DEPARTMENT OF ENERGY RICHLAND OPERATIONS OFFICE
		KAISER ENGINEERS HANFORD COMPANY
PROJ ENGR J CLOUD; DR D HENRICKSON	12-28-1988	CIVIL CONCRETE VAULT SECTION & DETAILS
APPROVED BY WJM HP RAY	12-5-1988	
SAFETY D PARTHREE	12-5-1988	PROJECT TITLE GROUT VAULT PAIR (218-E-16-102 & 103)
APPROVED BY WJM EA GOAKEY	12-5-1988	PROJ B-714 / FD ER9090 / JOB
CHECKED BY JV EGGER	12-28-1988	SCALE SHOWN / BLDG 218-E-15 / INDEX 0901
DRAWN BY RC CROSKREY	1-5-1989	DRAWING NUMBER H-2-77580 / SHEET 2 / OF 4 / REV 0
DESIGNED BY EA GOAKEY	1-5-1989	

BY-DATE	BY-DATE	REV BY DATE	DESCRIPTION	REV
APPROVAL	KEH APPROVAL		REVISIONS	
COMMENT REVIEW				

MICROFILMED

NUMBER	TITLE
DRAWING TRACEABILITY LIST	

H-2-77573	DRAWING LIST
NUMBER	TITLE
REFERENCES	
NEXT USED ON H-2-77580 SH 4	

KENBAD H277580A2 C 04/06/89

7760297

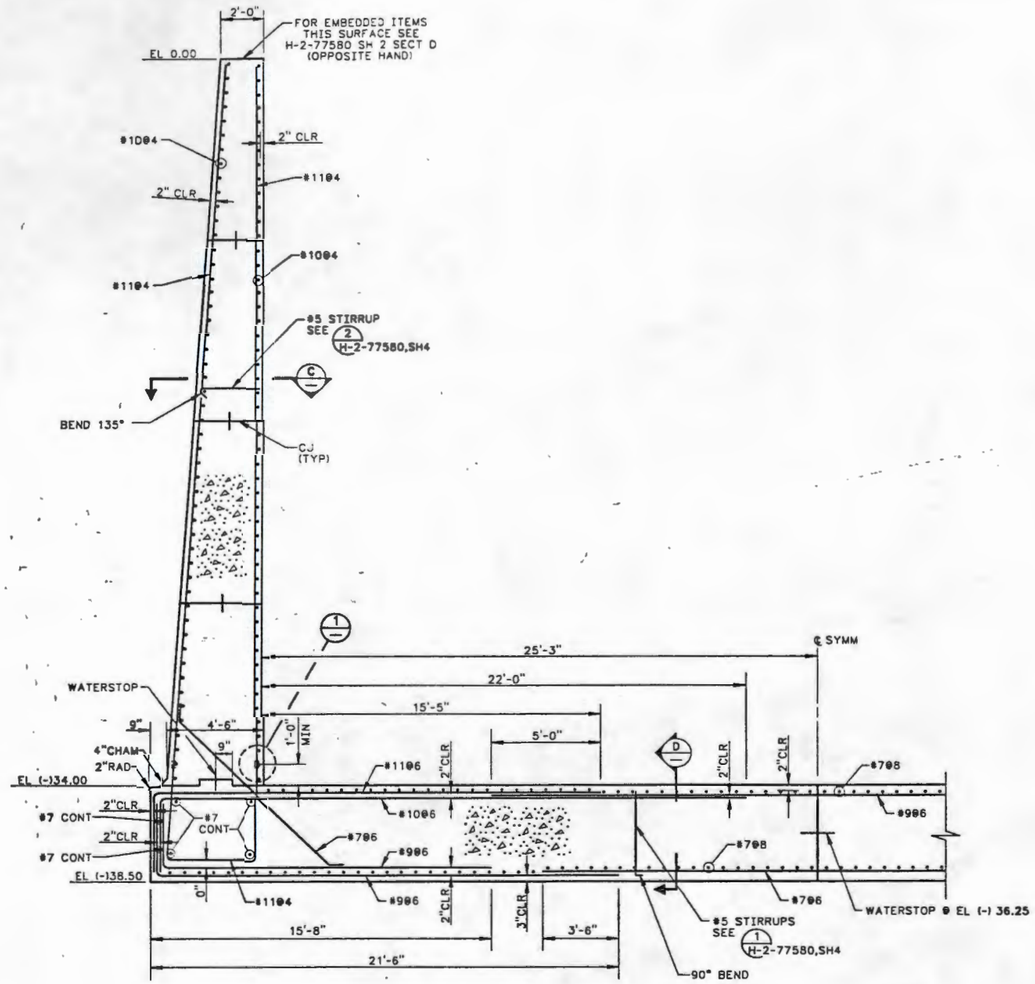

SECTION B
SCALE 3/8"=1'-0" H-2-77580 SH 1

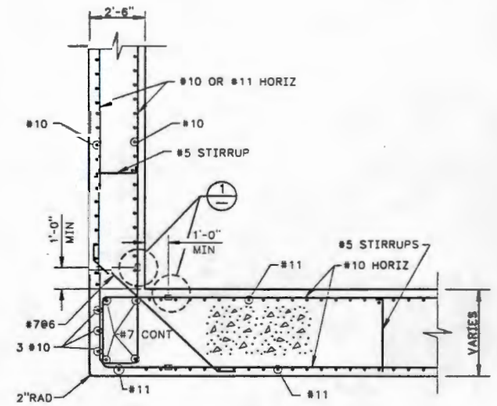

TYP HORIZ WALL CORNER
SCALE 3/8"=1'-0"

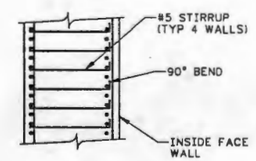

SECTION C
SCALE 1/2"=1'-0"

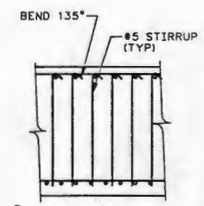

SECTION D
SCALE 1/2"=1'-0"

FOR GENERAL NOTES SEE H-2-77580 SH 2

NOT DESIGN VERIFIED

HOLD- ENTIRE DRAWING FOR VERIFICATION OF THERMAL PROPERTIES USED IN THERMAL STRESS ANALYSIS B-714-002

ARC WELDED BUTT SPLICE

MECHANICAL COUPLER

TYPICAL WALL BAR SPLICE 1
NO SCALE

NOTE: 1.) CONTRACTOR OPTION ON TYPE OF SPLICE AND SPACING
2.) STAGGER CONSECUTIVE SPLICES MIN 2'-6"

NUMBER	TITLE	REFERENCES
H-2-77573	DRAWING LIST	

DRAWING TRACEABILITY LIST — NUMBER, TITLE, NEXT USED ON

BY-DATE	BY-DATE	REV BY DATE	DESCRIPTION	REV
APPROVAL	KEH APPROVAL		REVISIONS	

MICROFILMED — COMMENT REV

OFFICIAL RELEASE BY WHC DATE APR 14 1986

EDT # 102073

IMPACT LEVEL 2

U.S. DEPARTMENT OF ENERGY
RICHLAND OPERATIONS OFFICE
KAISER ENGINEERS HANFORD COMPANY

CIVIL CONCRETE VAULT SECTIONS

PROJECT TITLE: GROUT VAULT PAIR (218-E-16-102 & 103)

SR BRIGGS	DATE 12-28 1988	
PROJ ENGR D CLOUD	12-28 1988	
DR H CHRISTENSEN	10-6 1988	
APPROVED BY WJM HP RAY	10-5 1988	
SAFETY D PARTHREE	10-5 1988	
APPROVED BY WJM EA GOAKEY	10-4 1988	
CHECKED BY JV EGGER	9-28 1988	
DRAWN BY RC CROSKREY	3-28 1988	
DESIGNED BY EA GOAKEY	3-28 1988	

PROJ B-714 — PO ER9090 — JOB
SCALE 1"=20' — BLDG 218-E-16 — INDEX 0901
DRAWING NUMBER H-2-77580 — SHEET 3 — OF 4 — REV 0

H277580A3 C 03/31/89

9011776029 8

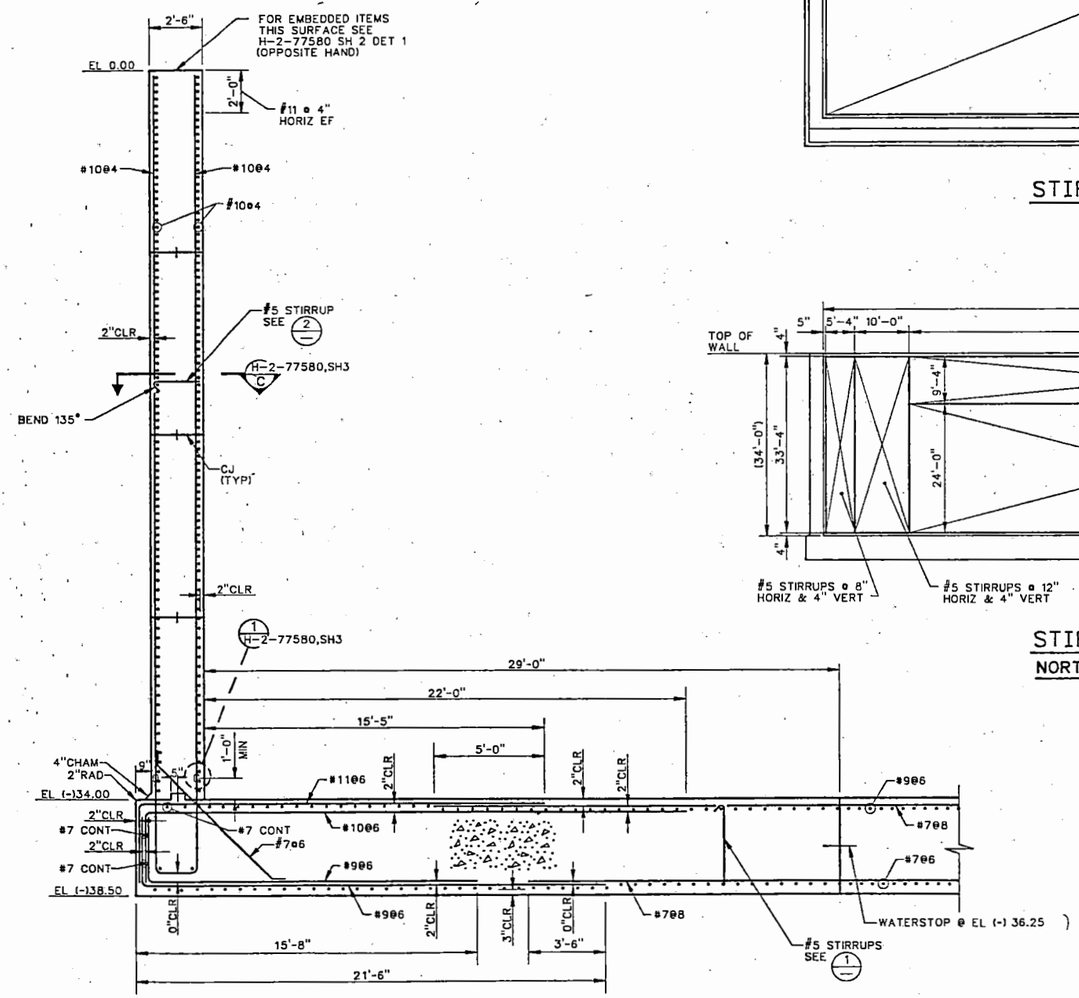

SECTION C
SCALE 3/8"=1'-0" H-2-77580 SH 1

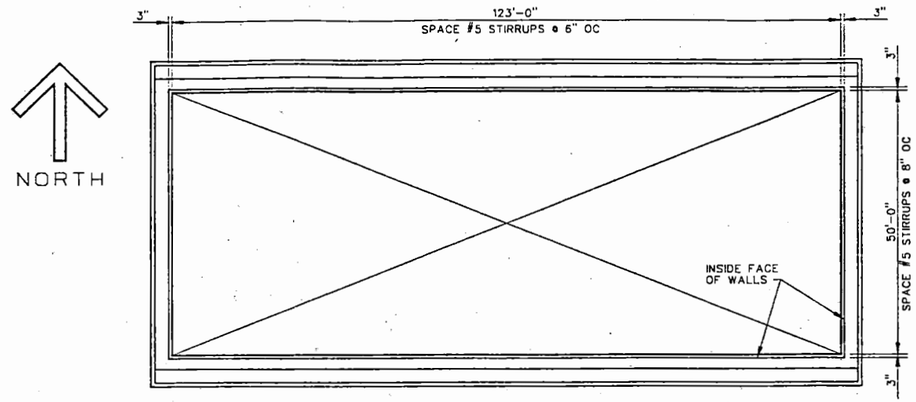

STIRRUP LAYOUT 1
PLAN VIEW H-2-77580,SH3
NO SCALE

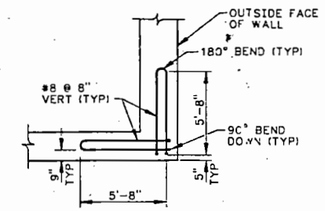

SECTION 4
ADDED CORNER REINF
TYPICAL 4 CORNERS
NO SCALE

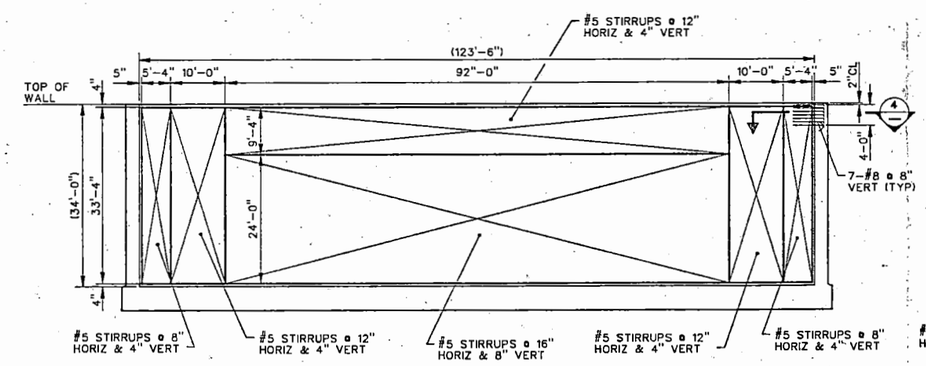

STIRRUP LAYOUT 2
NORTH & SOUTH ELEV H-2-77580,SH3
NO SCALE

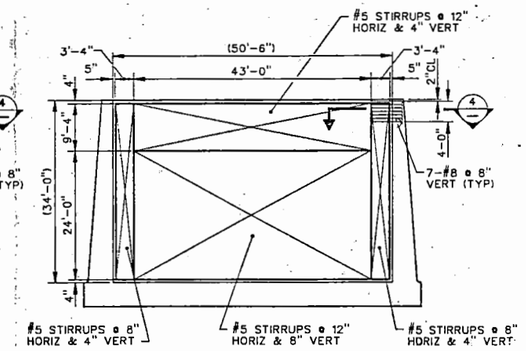

STIRRUP LAYOUT 3
EAST & WEST ELEV
NO SCALE

FOR GENERAL NOTES SEE H-2-77580 SH 2

NOT DESIGN VERIFIED

HOLD- ENTIRE DRAWING FOR VERIFICATION OF THERMAL PROPERTIES USED IN THERMAL STRESS ANALYSIS B-714-002

EDGAR A. GOAKEY — STATE OF WASHINGTON — 19171 — REGISTERED PROFESSIONAL ENGINEER

OFFICIAL RELEASE BY WHC DATE APR 14 1989

EOT # 102073

IMPACT LEVEL 3

WHC APPROVAL BY SR BRIGGS	DATE 12-28 1988	U.S. DEPARTMENT OF ENERGY RICHLAND OPERATIONS OFFICE
PROJ ENG AD CLOUD	12-28 1988	KAISER ENGINEERS HANFORD COMPANY
DR JJ HENRICKSON	10-6 1988	CIVIL CONCRETE VAULT SECTION
APPROVED BY WJM HP RAY	10-5 1988	
SAFETY D PARTHREE	10-5 1988	
APPROVED BY WJM EA GOAKEY	10-4 1988	PROJECT TITLE GROUT VAULT PAIR (218-E-16-102 & 103)
CHECKED BY JV EGGER	9-28 1988	PROJ B-714 NO ER9090 JOB
DRAWN BY RC CROSKREY	3-28 1988	SCALE 1"=20' BLDG 218-E-16 INDEX 0901
DESIGNED BY EA GOAKEY	3-28 1988	DRAWING NUMBER H-2-77580 SHEET 4 OF 4 REV 0

MICROFILMED	BY-DATE	BY-DATE	REV BY DATE	DESCRIPTION	REV
APPROVAL	KEH APPROVAL			REVISIONS	
COMMENT REVIEW					

DRAWING TRACEABILITY LIST

NUMBER	TITLE

H-2-77573 DRAWING LIST

NUMBER	TITLE

REFERENCES

NEXT USED ON

KEHGAD

H277580A4 C 04/06/89

9 6 9 2 0 3 7 7 1 0 9

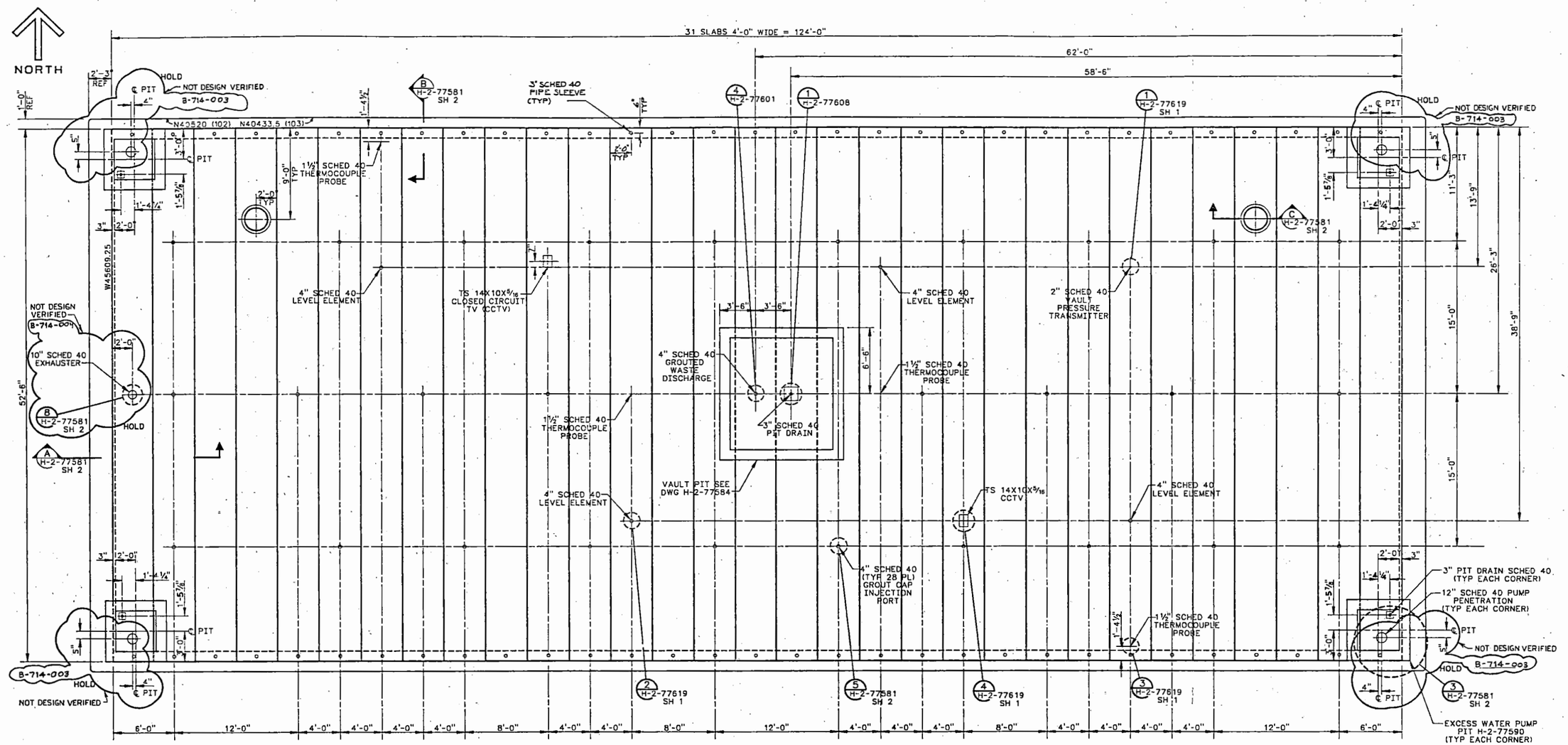

PRECAST ROOF PLAN

SCALE ¼"=1'-0"

CONCRETE TOPPING NOT SHOWN FOR CLARITY

FOR GENERAL NOTES SEE SH 2.

OFFICIAL RELEASE BY WHO DATE APR 14 1989

EDT # 102073

IMPACT LEVEL 2

WHC APPROVAL	DATE	U.S. DEPARTMENT OF ENERGY RICHLAND OPERATIONS OFFICE	
		KAISER ENGINEERS HANFORD COMPANY	
PROJ ENG LD CLOUD	12-28-1988	CIVIL VAULT ROOF PLAN	
DR H.TRENCHER / GP McCALLUM	9-13-1988		
APPROVED BY WJM EA DUKLETH	9-13-1988		
SAFETY RG HOLLENECK / AG MINSTER	9-26-1988	PROJECT TITLE GROUT VAULT PAIR (218-E-16-102 & 103)	
APPROVED BY WJM D LIEN	9-6-1988	PROJ B-714	PO ER9090
CHECKED BY CM CONSELMAN	8-10-1988	SCALE ¼"=1'-0"	BLDG 218-E-16
DRAWN BY RC CROSKREY	3-29-1988	DRAWING NUMBER H-2-77581	SHEET 1 OF 2 REV 0
DESIGNED BY RC CROSKREY	3-29-1988		

BY-DATE	BY-DATE	REV BY DATE	DESCRIPTION	REV
APPROVAL	KEH APPROVAL		REVISIONS	
COMMENT REVIEW				

MICROFILMED

NUMBER	TITLE
H-2-77573	DRAWING LIST

DRAWING TRACEABILITY LIST

NUMBER	TITLE
	REFERENCES
NEXT USED ON H-2-77581 SH 2	

H2775811

C 12/28/88

0017106

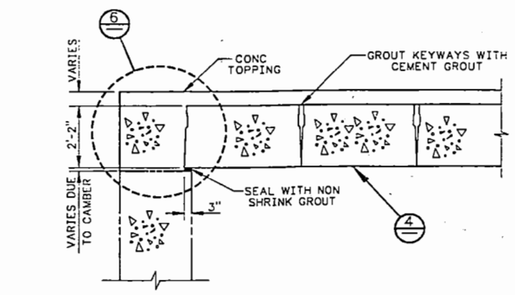

SECTION A
SCALE ½"=1'-0" H-2-77581 SH 1

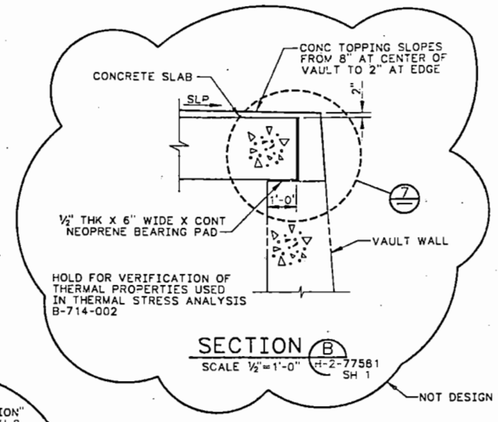

SECTION B
SCALE ½"=1'-0" H-2-77581 SH 1

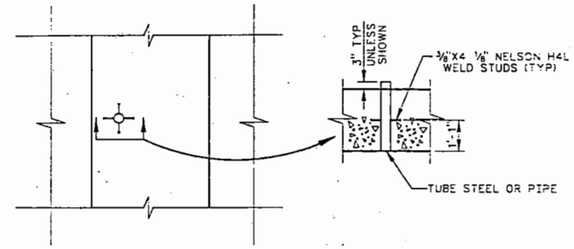

TYP PENETRATION DETAIL
SCALE ½"=1'-0"

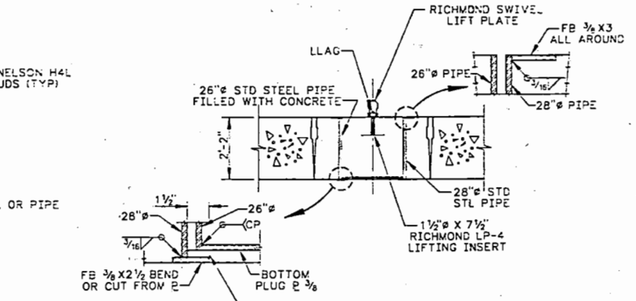

SECTION C
SCALE ½"=1'-0" H-2-77581 SH 1
2 REQD

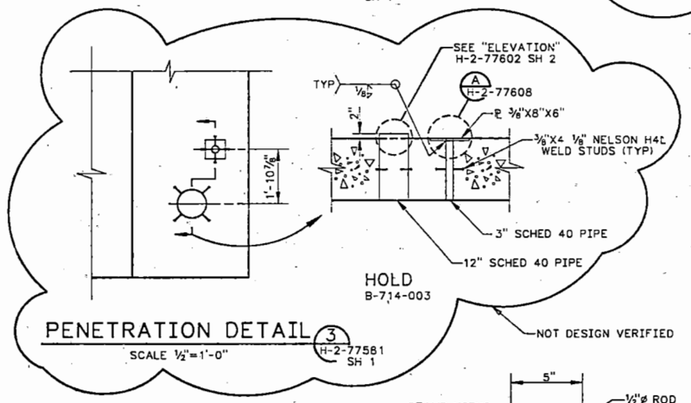

PENETRATION DETAIL
SCALE ½"=1'-0" H-2-77581 SH 1

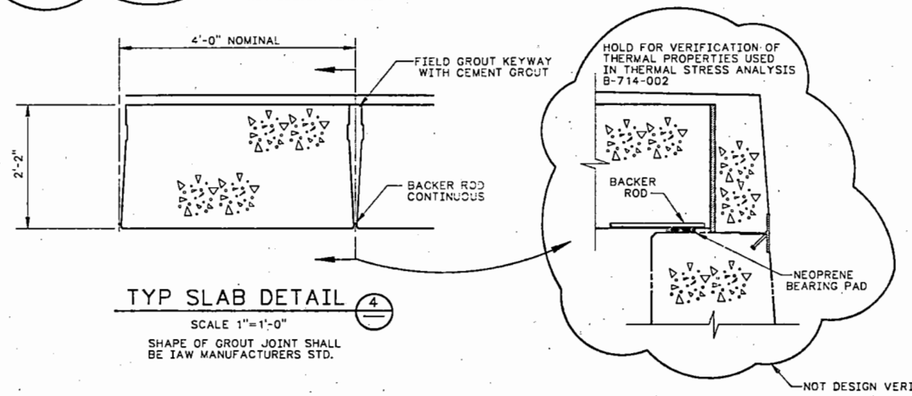

TYP SLAB DETAIL
SCALE 1"=1'-0"

SHAPE OF GROUT JOINT SHALL BE IAW MANUFACTURERS STD.

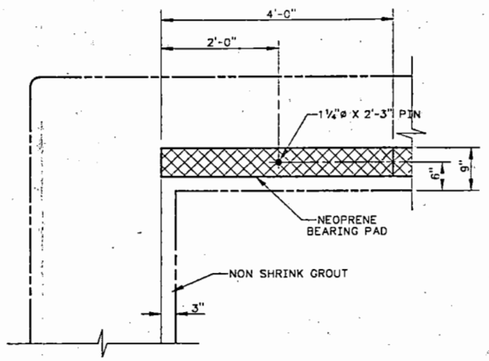

TYP BEARING PAD PLAN
SCALE 1"=1'-0"

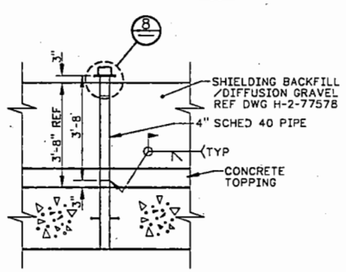

DETAIL
SCALE ½"=1'-0" H-2-77581 SH 1

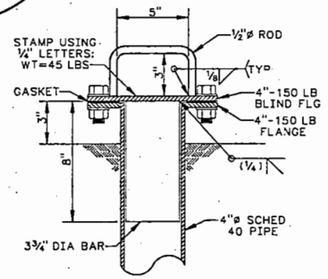

DETAIL
SCALE 3"=1'-0"

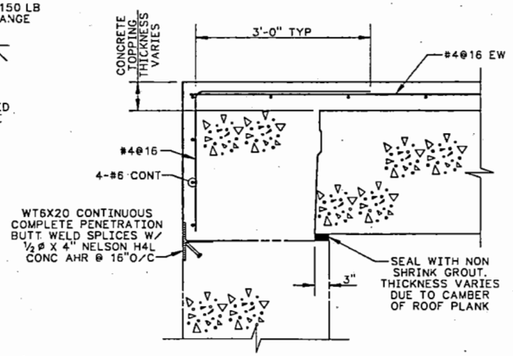

DETAIL
SCALE 1"=1'-0"

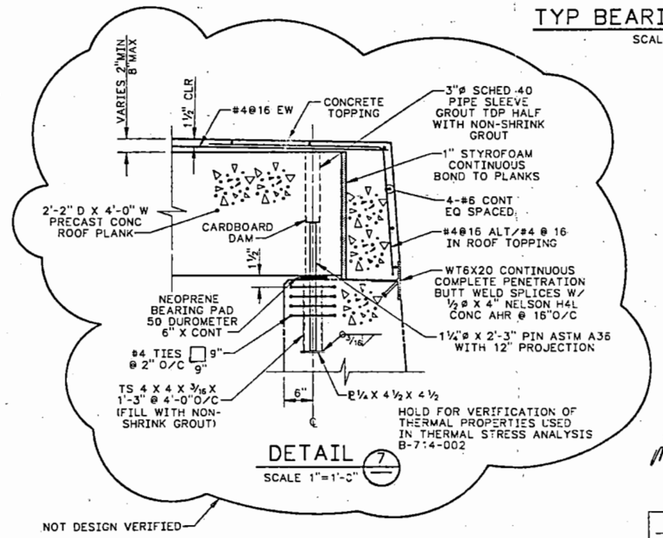

DETAIL
SCALE 1"=1'-0"

GENERAL NOTES

1- FOR CONSTRUCTION SPECS SEE B-714-C2, FOR CONCRETE TOPPING SEE SPECIFICIATION SECTION 03301

2- DESIGN LOADS:
ROOF SLAB
SUPERIMPOSED EARTH: 500 PSF
EQUIPMENT LOAD: 300 PSF

3- PRESTRESSED ROOF PANELS WITH VOIDS WILL NOT BE ACCEPTED.

4- PAINT ALL RISERS PROTRUDING ABOVE SHI LDING BACKFILL WITH ONE COAT OF PRIMER CONFORMING TO FS TT-P-645 AND TWO COATS OF ENAMEL CONFORMING TO FS TT-E-489.

5- FOR PIPING SUPPORT BLOCKOUT LOCATIONS IN CONCRETE TOPPING SEE DWG H-2-77598.

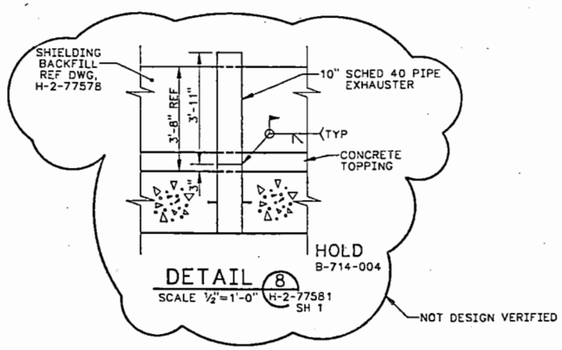

DETAIL
SCALE ½"=1'-0" H-2-77581 SH 1

OFFICIAL RELEASE BY WHC
DATE APR 14 1999

EDT # 102073

IMPACT LEVEL 2

WHC APPROVAL BY SR BRIGGS	DATE 4/14/99	U.S. DEPARTMENT OF ENERGY RICHLAND OPERATIONS OFFICE	
		KAISER ENGINEERS HANFORD COMPANY	
PROJ ENGR CLOUD	12-29-98	CIVIL VAULT ROOF SECTIONS & DETAILS	
GP McCALLUM	12-29-98		
APPROVED WJM EA DUKLETH	8-13-98		
SAFETY RG HOLLENBECK AS WRITTEN	12-29-98	PROJECT TITLE GROUT VAULT PAIR (218-E-16-102 & 103)	
APPROVED BY WJ VAGNDER D.LIE	12-29-98		
CHECKED BY CM CONSELMAN	8-13-98	PROJ B-714	PO ER9090
DRAWN BY RC CROSKREY	1-5-98	SCALE SHOWN	BLDG 218-E-16
DESIGNED BY RC CROSKREY	1-5-98	DRAWING NUMBER H-2-77581	SHEET 2 OF 2 REV 0

BY-DATE	BY-DATE	REV BY DATE	DESCRIPTION	REV
APPROVAL	KEM APPROVAL			
COMMENT REVIEW			REVISIONS	

NUMBER	TITLE
	DRAWING TRACEABILITY LIST

NUMBER	TITLE
H-2-77573	DRAWING LIST
	REFERENCES
NEXT USED ON	

MICROFILMED

XENGAR H2775814? C 03/29/89

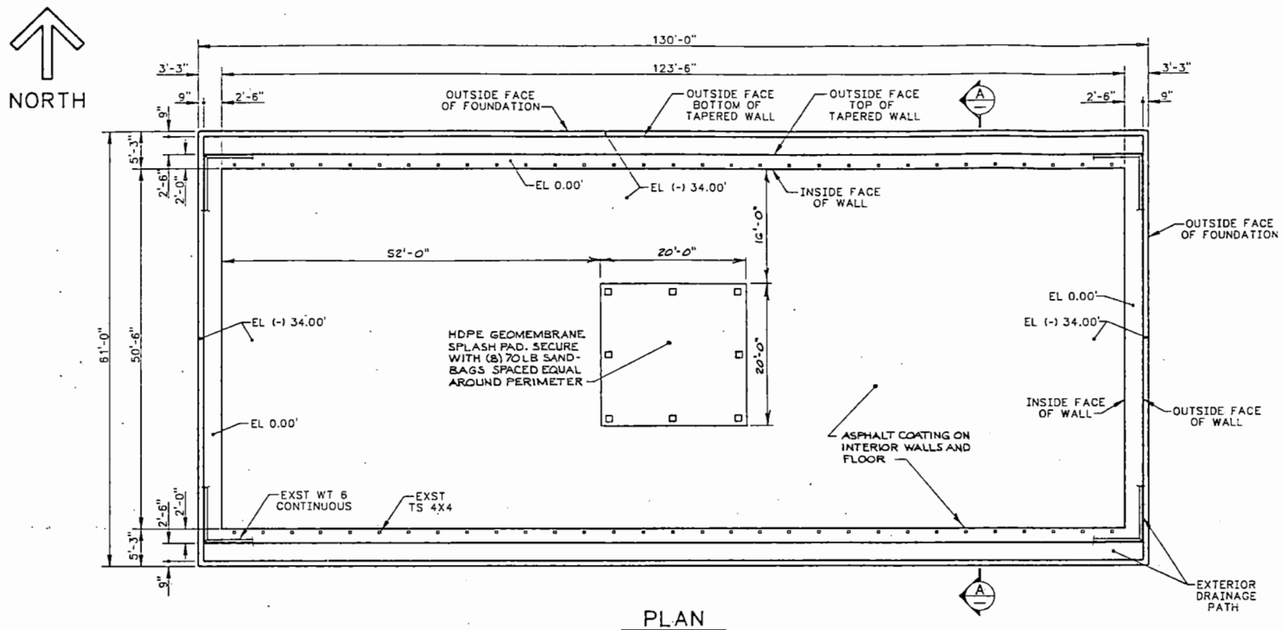

PLAN
SCALE 1/8"=1'-0"

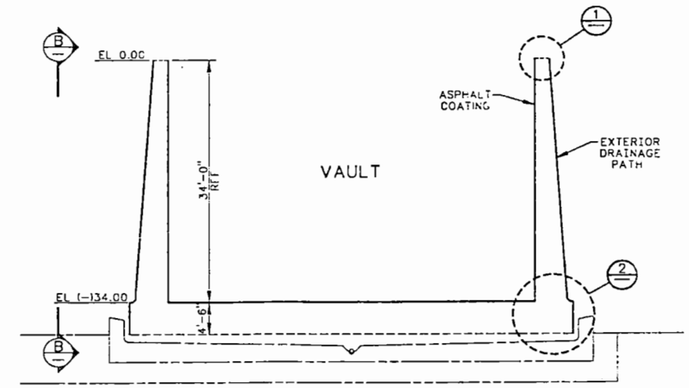

SECTION A
SCALE 1/8"=1'-0"

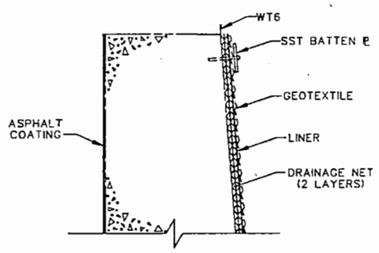

DETAIL 1
SCALE 1"=1'-0"

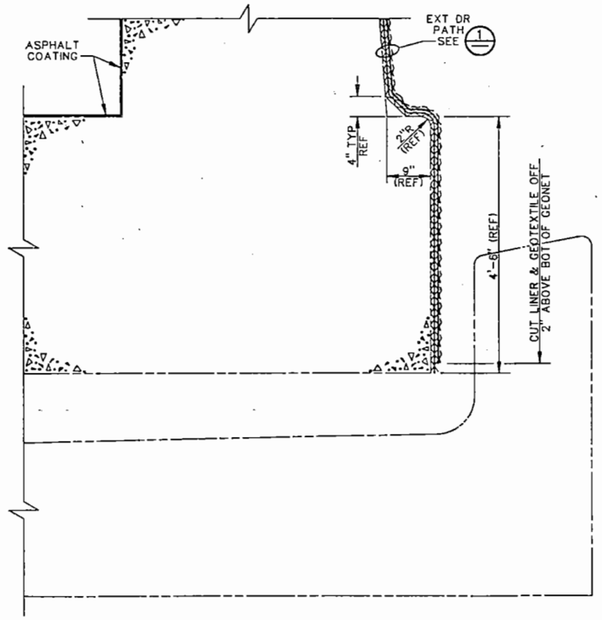

DETAIL 2
SCALE 1"=1'-0"

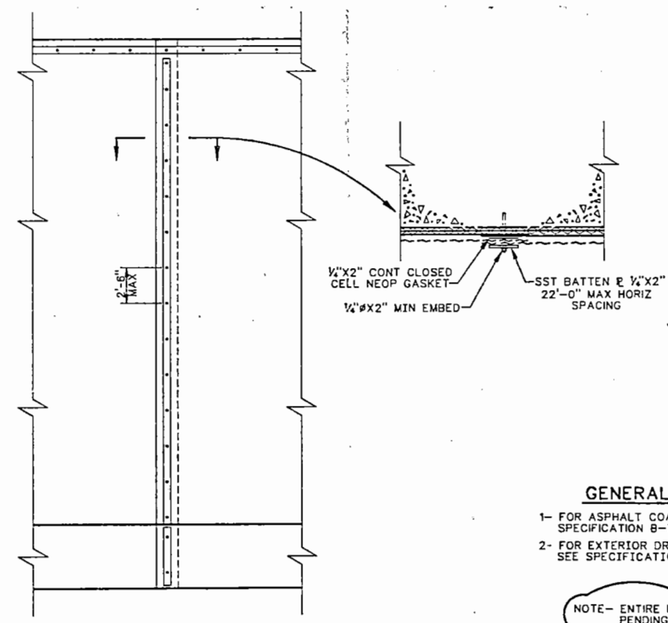

VIEW B
SCALE 1/4"=1'-0"

GENERAL NOTES

1- FOR ASPHALT COATING REQUIREMENTS SEE SPECIFICATION B-714-C2

2- FOR EXTERIOR DRAINAGE PATH REQUIREMENTS SEE SPECIFICATION B-714-C2

NOTE- ENTIRE DRAWING ON HOLD PENDING COMPLETION OF COMPATIBILITY TESTING

B-714-005

NOT DESIGN VERIFIED

OFFICIAL RELEASE BY WHC
DATE APR 04 1989

EDT # 101089

IMPACT LEVEL 2

DRAWING TRACEABILITY LIST			
NUMBER	TITLE	NUMBER	TITLE
H-2-77573	DRAWING LIST		
	REFERENCES		
	NEXT USED ON H-2-77573		

REVISIONS				
REV	DESCRIPTION	REV BY DATE	BY-DATE	BY-DATE
			KEH APPROVAL	APPROVAL

MICROFILMED
COMMENT REVIEW

WHC APPROVAL BY	3/30/89	12-30 1988
JE BREED		11-17 1988
JK MARSHALL		11-16 1988
AG MINISTER		11-16 1988
RH JK MARSHALL		11-16 1988
HP RAY		11-16 1988
RC CROSKREY		6-3 1988
RC HOLLENBECK		6-3 1988

U.S. DEPARTMENT OF ENERGY
RICHLAND OPERATIONS OFFICE
KAISER ENGINEERS HANFORD COMPANY

M CIVIL
EXT DRAINAGE PATH
PLAN SECT & DET

PROJECT TITLE: GROUT VAULT PAIR (218-E-16-102 & 103).

PROJ	NO	JOB
B-714	ER9090	

SCALE	BLDG	INDEX
SHOWN	218-E-16	0110

DRAWING NUMBER	SHEET	OF	REV
H-2-77582	1	1	0

H09788AL
C 01/03/89

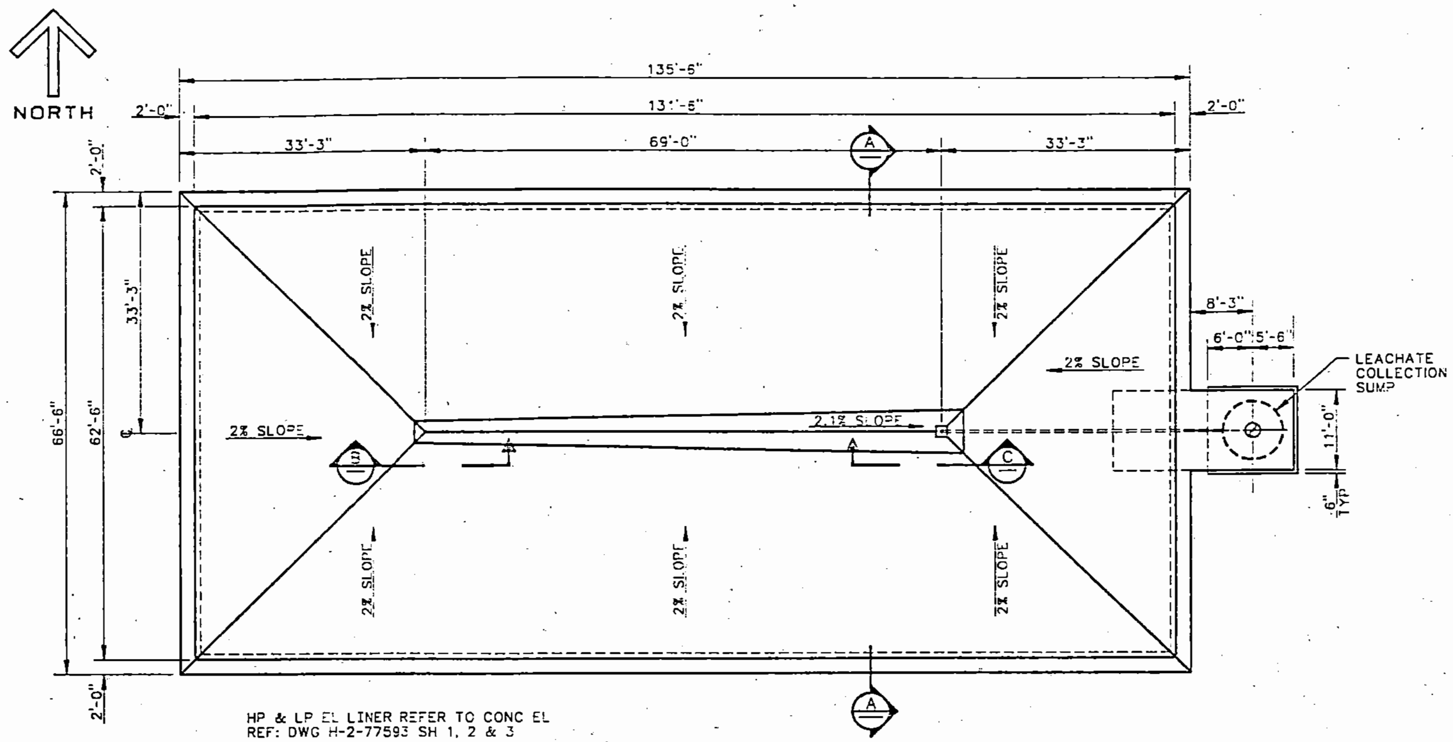

VAULT 102 & 103 LINER PLAN
SCALE 1"=10'

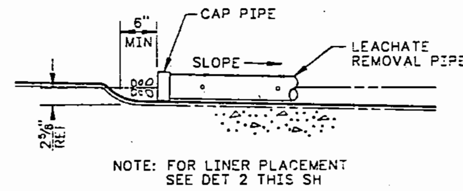

SECTION B
SCALE 1"=1'-0"

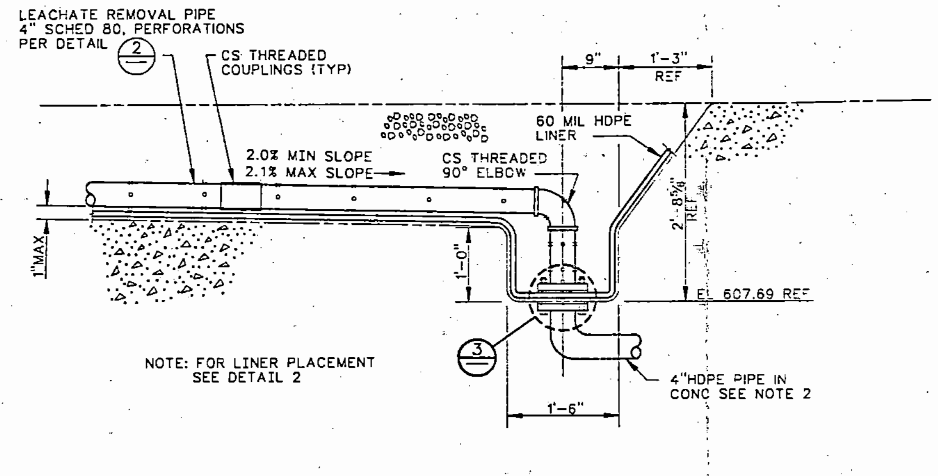

SECTION C
SCALE 1"=1'-0"

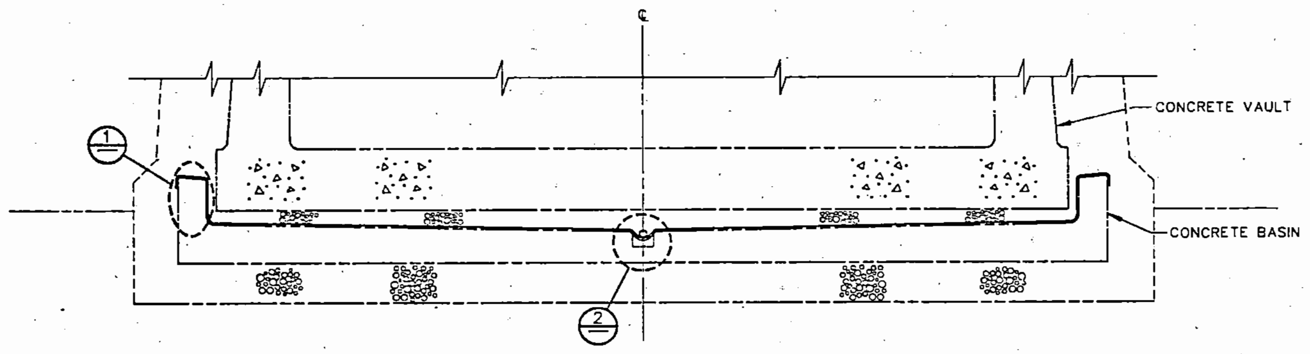

SECTION A
SCALE 3/16"=1'-0"

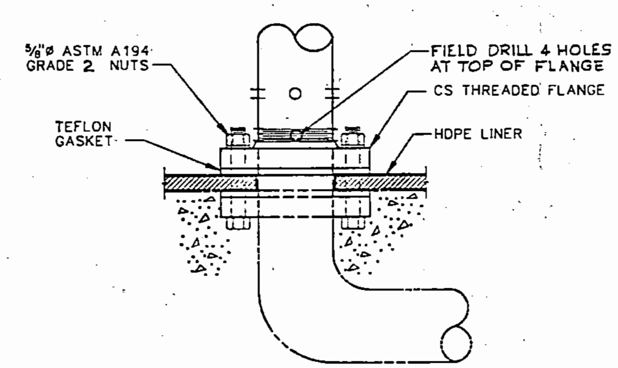

DETAIL 3
3"=1'-0

GENERAL NOTES

1- ALL ABBREVIATIONS ARE PER ANSI Y1.1-1972
2- FOR LEACHATE PIPING IN CONC SEE DWG H-2-77605 SH 1
3- FOR LINER REQUIREMENTS SEE SPECIFICATION B-714-C2
4- CONTINUOUS SEAL BETWEEN LINER ATTACHMENT AND BATTEN PLATE SHALL BE DESIGNED TO HOLD A PRESSURE OF 1 PSI
5- MAXIMUM OPERATING TEMPERATURE 90°C.

HOLD- ENTIRE DRAWING ON HOLD PENDING COMPLETION OF COMPATIBILITY TESTING B-714-005

NOT DESIGN VERIFIED

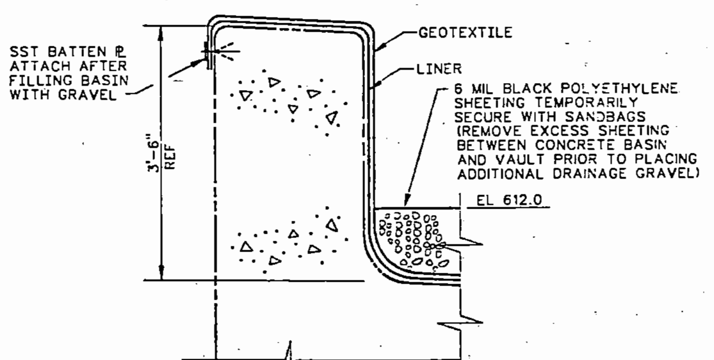

DETAIL 1
NTS

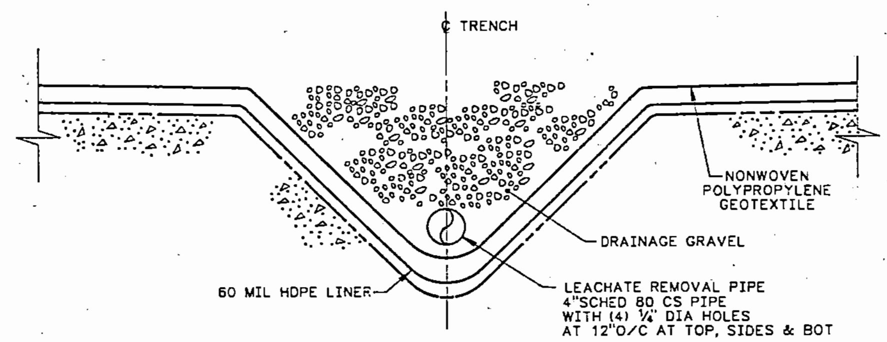

DETAIL 2
NTS

OFFICIAL RELEASE BY WHC
DATE APR. 14 1989

IMPACT LEVEL 2
EDT # 102073

NUMBER	TITLE
H-2-77593	SH 1-3 CONCRETE BASIN
H-2-77605	LEACHATE COLLECTION TANK
H-2-77580	SH 3 CONC VAULT SECT & ELEV
H-2-77580	SH 2 CONC VAULT SECT & DET
H-2-77580	SH 1 CONC VAULT PLAN & SECT
H-2-77573	DRAWING LIST

REFERENCES
NEXT USED ON H-2-77583 SH 2
DRAWING TRACEABILITY LIST

MICROFILMED
REVISIONS: BY-DATE | BY-DATE | KEH APPROVAL | APPROVAL | REV BY DATE | DESCRIPTION | REV
COMMENT REVIEW

WHC APPROVAL BY SR BRIGGS — 12-30 1988
PROJ ENGR SS CLOUD — 12-30 1988
QA HW HENRICKSON — 9-29 1988
APPROVED BY HP RAY — 9-28 1988
SAFETY D PARTHREE — 9-28 1988
APPROVED BY HP RAY — 9-28 1988
CHECKED BY SC ASHWORTH — 9-26 1988
DRAWN BY RC CROSKREY — 1-5 1988
DESIGNED BY RG HOLLENBECK — 1-5 1988

U.S. DEPARTMENT OF ENERGY
RICHLAND OPERATIONS OFFICE
KAISER ENGINEERS HANFORD COMPANY

CIVIL LINER PLAN SECTION & DETAILS

PROJECT TITLE: GROUT VAULT PAIR (218-E-16-102 & 103)
PROJ B-714 | WO ER9090 | JOB —
SCALE SHOWN | BLDG 218-E-16 | INDEX 0400
DRAWING NUMBER H-2-77583 | SHEET 1 | OF 1 | REV 0

H277583A1
C 03/28/89

9 0 1 1 7 6 0 3 0 3

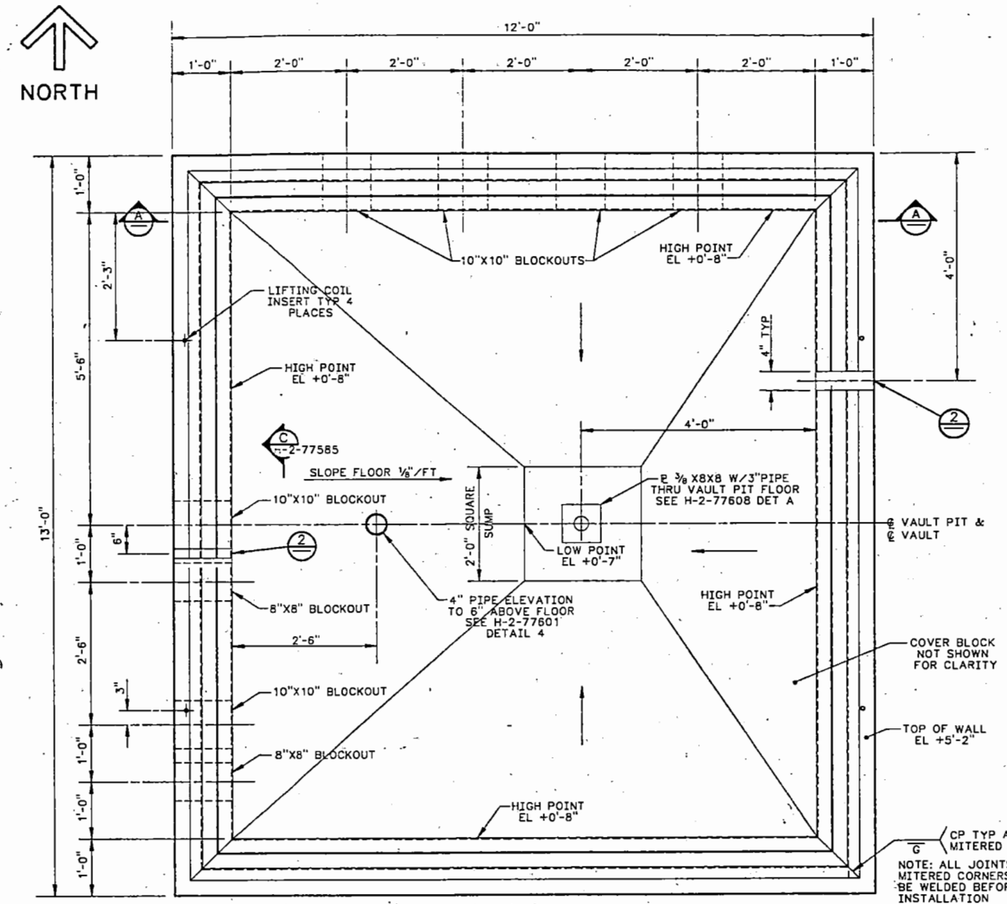

PLAN

SCALE 1"=1'-0"
(SHOWN WITH COVER BLOCK REMOVED)

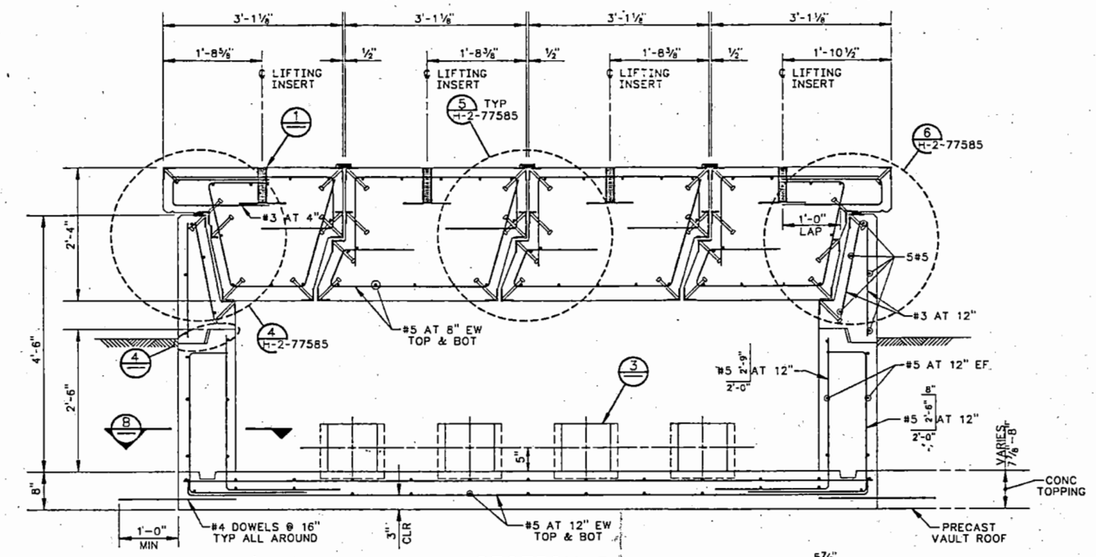

SECTION A

SCALE 1"=1'-0"

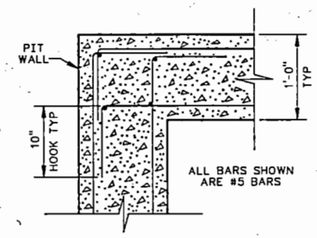

SECTION B

SCALE 1½"=1'-0"

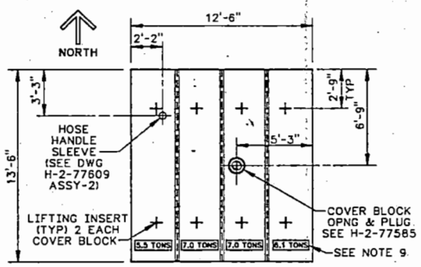

PLAN OF COVER BLOCKS

SCALE ¼"=1'-0"

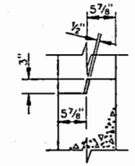

DETAIL 4

SCALE 1"=1'-0"

VAULT PIT NOTES

1- FOR CONSTRUCTION SPECIFICATIONS, SEE B-714-C2, FOR CONCRETE USE SPEC SECTION 03300 CAST-IN-PLACE CONCRETE.
2- DESIGN LOAD:
COVER BLOCK 100 PSF (LIVE LOAD)
3- DESIGN STRESSES:
CONCRETE f'c = 4000 PSI AT 28 DAYS
REINF STEEL f_y = 60000 PSI
4- APPLY SPECIAL PROTECTIVE COATING TO THE FLOOR, INTERIOR WALLS, TOPS OF WALLS AND UPPER ONE FOOT ON EXTERIOR WALLS AND ALL SURFACES OF COVER BLOCK. (SEE SPEC SECTION 09805)
5- TOLERANCES SHALL CONFORM TO ACI 117-81 EXCEPT AS NOTED BELOW.
A- INTERIOR WALL SURFACES ±¼"
B- COVER BLOCKS AND WALL RECESSES ±⅛"
C- SLEEVE LOCATION ±¼"
6- PROVIDE ¼" WIDE X ¼" DEEP GROOVE AT EDGES OF ALL EMBEDDED ANGLES. FILL GROOVES WITH A GREY POLYSULFIDE SEALANT.
7- TEMPORARY GUARDRAIL SHALL BE PROVIDED AROUND VAULT PIT WHEN COVER BLOCKS ARE REMOVED.
8- FOR PIT BLOCKOUT AND COVER PENETRATION LOCATIONS, SEE DWG H-2-77601
9- PAINT COVER BLOCK WEIGHTS WITH 2" HIGH BLACK LETTERS ON YELLOW BACKGROUND. SEE DWG H-2-77610 FOR PAINTING REQUIREMENTS.

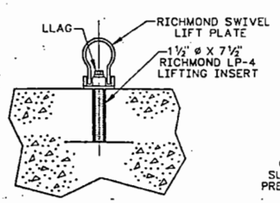

DETAIL 1

SCALE 1½"=1'-0"

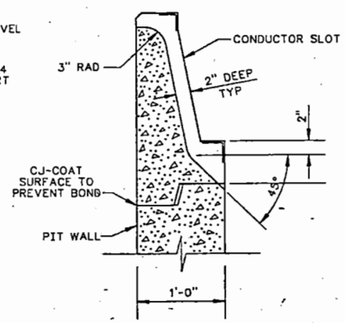

DETAIL 2

SCALE 1½"=1'-0"

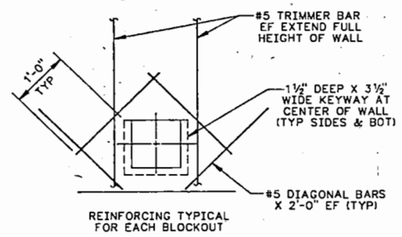

DETAIL 3

SCALE 1"=1'-0"

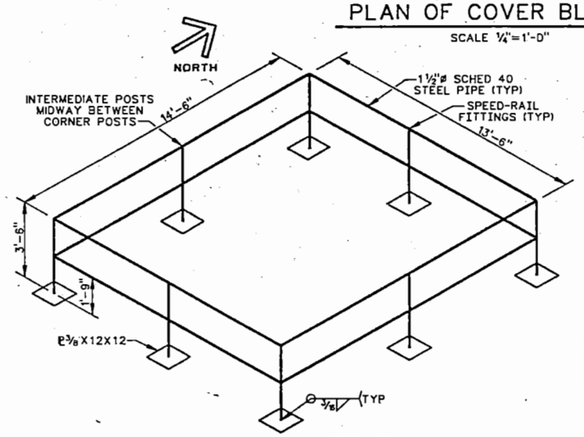

GUARDRAIL DETAIL

SCALE: NONE
SEE NOTE 7

OFFICIAL RELEASE BY WHC
DATE APR 04 1989

EDT = 101089

IMPACT LEVEL 2

NUMBER	TITLE
	DRAWING TRACEABILITY LIST

NUMBER	TITLE
H-2-77573	DRAWING LIST
NEXT USED ON H-2-77585 SH 1	REFERENCES

BY-DATE	BY-DATE	REV BY DATE	DESCRIPTION	REV
APPROVAL	KEH APPROVAL	REVISIONS		
COMMENT REVIEW				

MICROFILMED

WHC APPROVAL BY SA BRIGGS 11/28/87

PROJ ENGR	10 CLOUD	12-28-1988
DRWN	GP McCALLUM	9-13-1988
APPROVED	WJM EA DUKLETH	9-13-1988
SAFETY	RG HOLLENBECK AG MINSTER	9-13-88 9-13-88
APPROVED CON ENGR	WJM D LIEN	9-6-1988
CHECKED	CM CONSELMAN	8-10-1988
DRAWN	RC CROSKREY	1-5-1988
DESIGNED	RC CROSKREY	1-5-1988

U.S. DEPARTMENT OF ENERGY
RICHLAND OPERATIONS OFFICE
KAISER ENGINEERS HANFORD COMPANY

M CIVIL
VAULT PIT PLAN
SECTIONS & DETAILS

GROUT VAULT PAIR (218-E-16-102 & 103)

PROJ	WO	JOB
B-714	ER9090	
SCALE	BLDG	INDEX
SHOWN	218-E-16	0900,0901
DRAWING NUMBER	SHEET	OF	REV
H-2-77584	1	1	0

~~BERGSAD~~ 1 N0225841 C 12/28/88

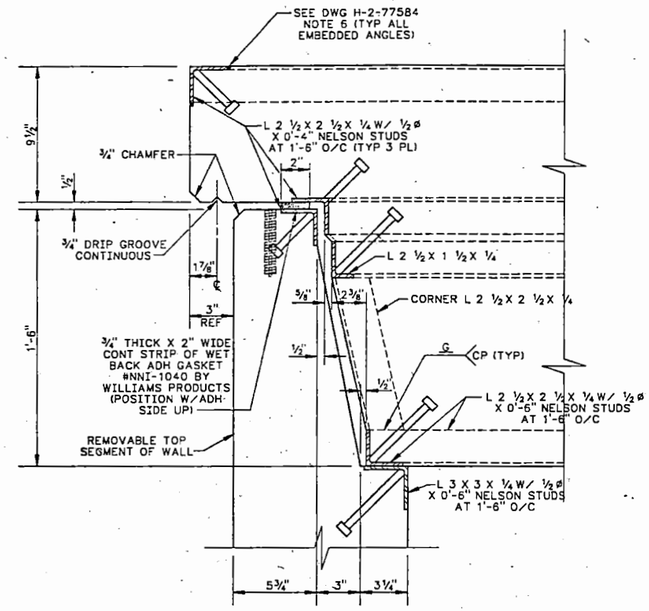

DETAIL 4
SCALE 3"=1'-0" H-2-77584

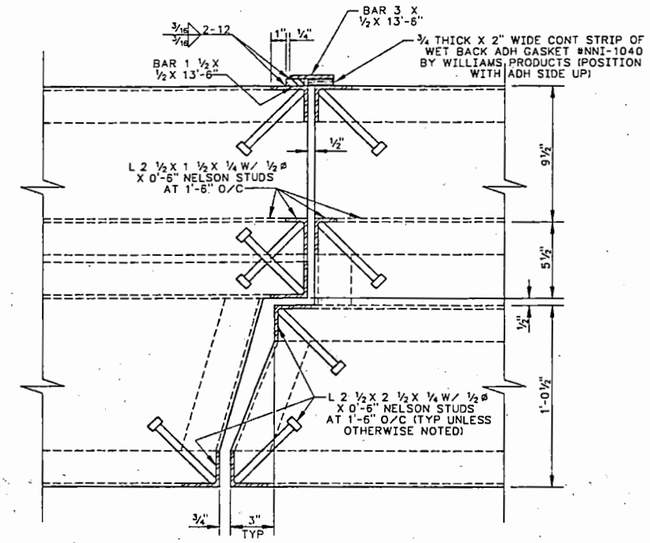

DETAIL 5
SCALE 3"=1'-0" H-2-77584

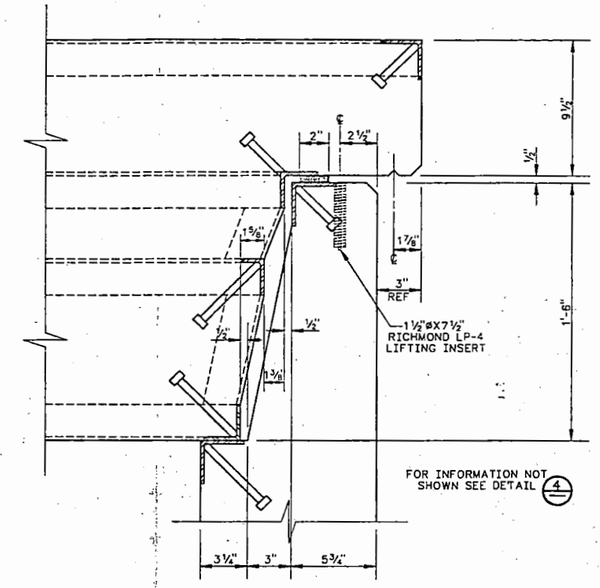

DETAIL 6
SCALE 3"=1'-0" H-2-77584

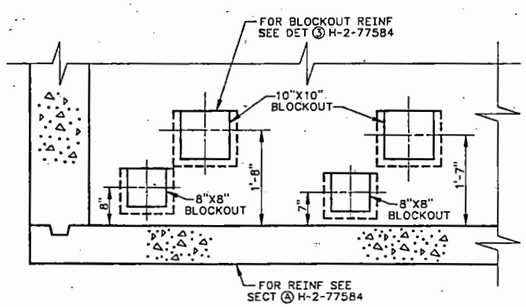

SECTION C
SCALE 1"=1'-0" H-2-77584

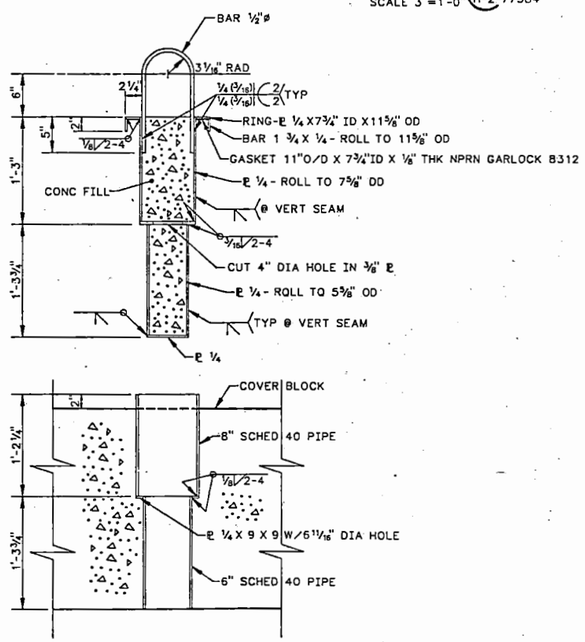

VIEW PORT PLUG
SCALE 1½"=1'-0"

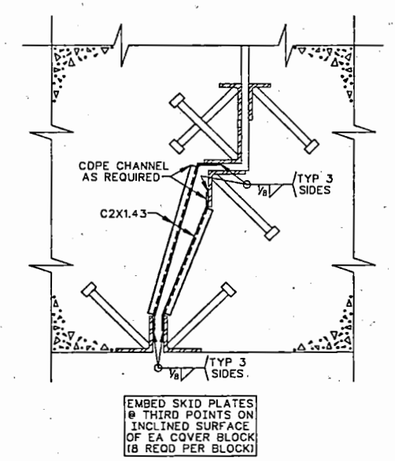

SKID PLATE DET 7
SCALE 3"=1'-0" H-2-77584

OFFICIAL RELEASE BY WHC DATE APR 04 1989

EDT # 101089

IMPACT LEVEL 2

DRAWING LIST		
NUMBER	TITLE	REFERENCES
H-2-77573	DRAWING LIST	

DRAWING TRACEABILITY LIST — NEXT USED ON

REV	DESCRIPTION	BY-DATE	BY-DATE
APPROVAL	KEH APPROVAL		

REVISIONS — COMMENT REVIEW — MICROFILMED

WHC APPROVED 12/29/89 BY — DATE 12-28 1988

U.S. DEPARTMENT OF ENERGY
RICHLAND OPERATIONS OFFICE
KAISER ENGINEERS HANFORD COMPANY

PROJ ENGR WJM EA DUKLETH 12-28 1988
GA MANAGER GP Mc CALLUM 9-13 1988
APPROVED WJM EA DUKLETH 9-13 1988
SAFETY RC NOLENBECK AG MINISTER 9-6 88
APPROVED WJM 11/1/87 BY WJM D LIEN 9-6 1988
CHECKED BY CM CONSELMAN 8-11 1988
DRAWN BY RC CROSKREY 3-9 1988
DESIGNED BY RC CROSKREY 3-9 1988

CIVIL VAULT PIT DETAILS

PROJECT TITLE: GROUT VAULT PAIR (218-E-16-102 & 103)

PROJ	WO	JOB
B-714	ER9090	

SCALE	BLDG	INDEX
SHOWN	218-E-16	0110

DRAWING NUMBER	SHEET	OF	REV
H-2-77585	1	1	0

~~XEROXED~~ H277585A1 C 12/29/88

9011706

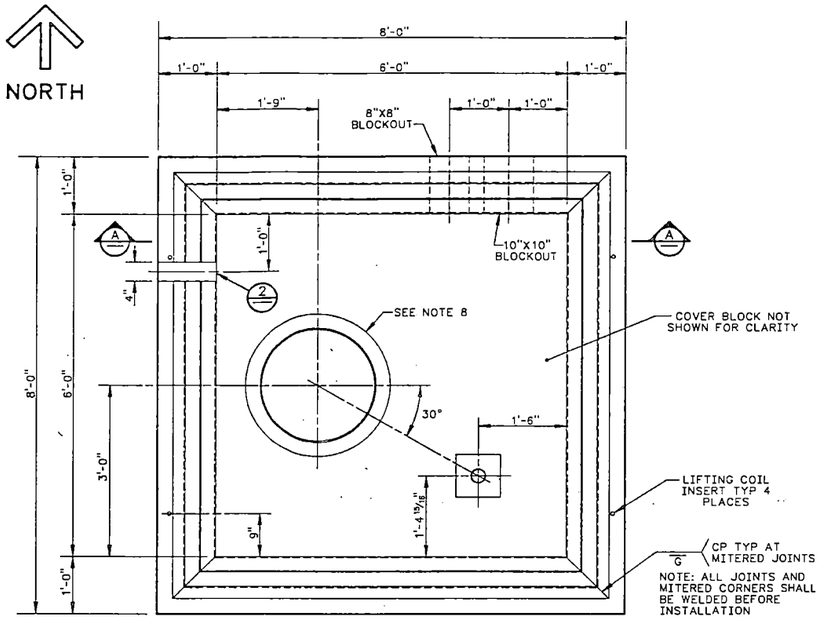

PLAN

SCALE 1"=1'-0"
(SHOWN WITH COVER BLOCK REMOVED)

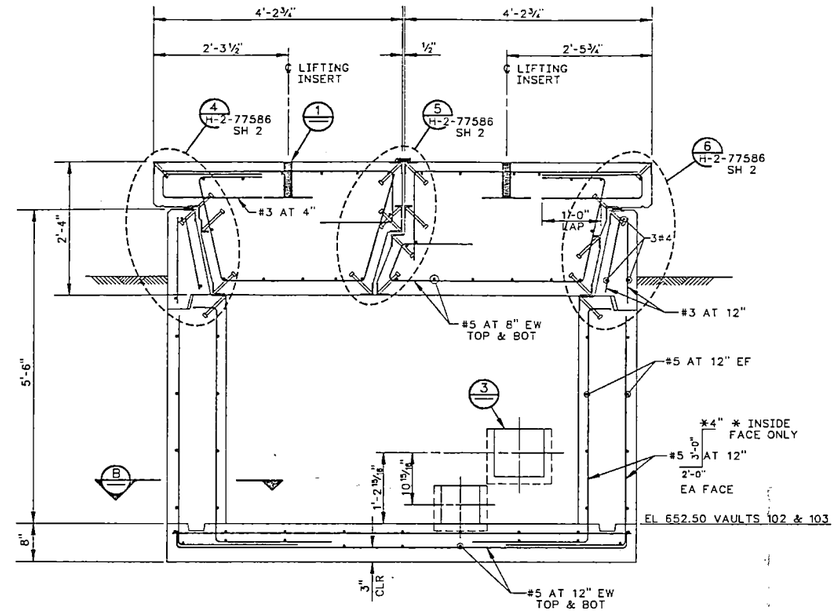

SECTION A

SCALE 1"=1'-0"

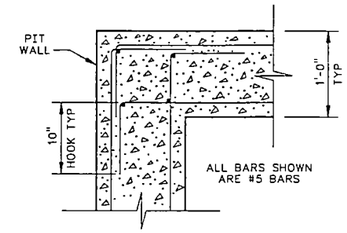

SECTION B

SCALE 1½"=1'-0"

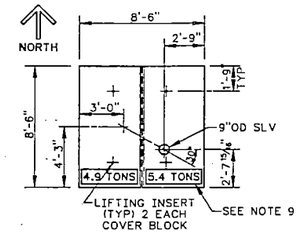

PLAN OF COVER BLOCKS

SCALE ¼"=1'-0"

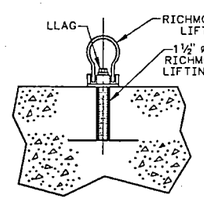

DETAIL 1

SCALE 1½"=1'-0"

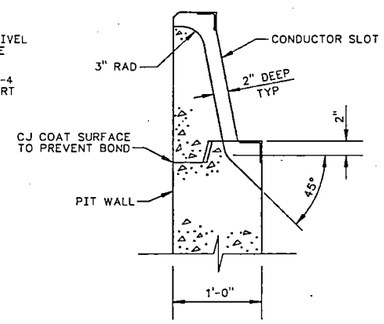

DETAIL 2

SCALE 1½"=1'-0"

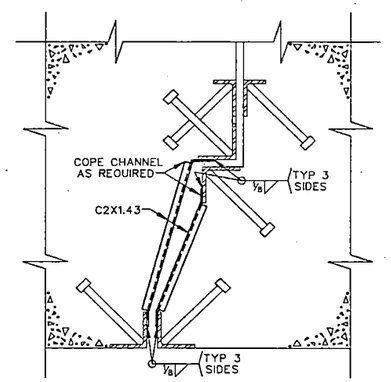

EMBED SKID PLATES @ THIRD POINTS ON INCLINED SURFACE OF EA COVER BLOCK (8 REQD PER BLOCK)

SKID PLATE DET 7

SCALE 3"=1'-0" H-2-77584

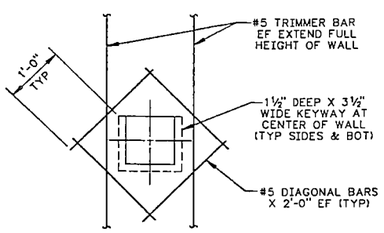

DETAIL 3

SCALE 1"=1'-0"

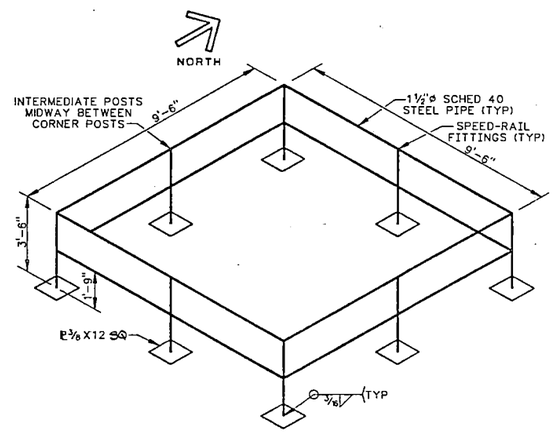

GUARDRAIL DETAIL

SCALE: NONE
SEE NOTE 7

LEACHATE PIT NOTES

1- FOR CONSTRUCTION SPECIFICATIONS, SEE B-714-C2, FOR CONCRETE SEE SECTION 03300 CAST-IN-PLACE CONCRETE.
2- DESIGN LOAD:
COVER BLOCK 100 PSF (LIVE LOAD)
3- DESIGN STRESSES:
CONCRETE f_c' = 4000 PSI AT 28 DAYS
REINF STEEL f_y = 60000 PSI
4- APPLY SPECIAL PROTECTIVE COATING TO THE FLOOR, INTERIOR WALLS, TOPS OF WALLS AND UPPER ONE FOOT ON EXTERIOR WALLS AND ALL SURFACES OF COVER BLOCK. (SEE SPEC SECTION 09805)
5- TOLERANCES SHALL CONFORM TO ACI 117-81 EXCEPT AS NOTED BELOW.
A- INTERIOR WALL SURFACES ±¼"
B- COVER BLOCKS AND WALL RECESSES ±⅛"
C- SLEEVE LOCATION ±¼"
6- PROVIDE ¼" WIDE X ¼" DEEP GROOVE AT EDGES OF ALL EMBEDDED ANGLES. FILL GROOVES WITH A GREY POLYSULFIDE SEALANT.
7- TEMPORARY GUARDRAIL SHALL BE PROVIDED AROUND LEACHATE PIT WHEN COVER BLOCKS ARE REMOVED.
8- FOR FLOOR & COVER PENETRATIONS SEE DRAWING H-2-77612.
9- PAINT COVER BLOCK WEIGHTS WITH 2" HIGH BLACK LETTERS ON YELLOW BACKGROUND. SEE DWG H-2-77610 FOR PAINTING REQUIREMENTS.

OFFICIAL RELEASE BY WHC
DATE APR 04 1989

EDT = 101089

IMPACT LEVEL 2

NUMBER	TITLE
	DRAWING TRACEABILITY LIST

NUMBER	TITLE
H-2-77612	LEACHATE PUMP PIT JMPR ARR/JMPR ASSY
H-2-77573	DRAWING LIST
	REFERENCES
	NEXT USED ON H-2-77586 SH 2

REV	DESCRIPTION	REV BY DATE	BY-DATE	BY-DATE
	REVISIONS		KEH APPROVAL	APPROVAL
				COMMENT REVIEW

MICROFILMED

		DATE
WHC APPROVAL BY		12-28-1988
PROJ ENGR		9-13-1988
GRP SUPR ENGR	GP McCALLUM	9-13-1988
APPROVED BY	WJM EA DUKLETH	9-13-1988
SAFETY	RG HOLLENBECK / AC MINISTER	9-8-88
APPROVED BY	WJM D LIEN	9-6-1988
CHECKED BY	CM CONSELMAN	8-12-1988
DRAWN BY	RC CROSKREY	5-6-1988
DESIGNED BY	RC CROSKREY	5-6-1988

U.S. DEPARTMENT OF ENERGY
RICHLAND OPERATIONS OFFICE
KAISER ENGINEERS HANFORD COMPANY

CIVIL
LEACHATE PIT PLAN
SECTIONS & DETAILS

PROJECT TITLE: GROUT VAULT PAIR (218-E-16-102 & 103)

PROJ	RO	JOB
B-714	ER9090	

SCALE	BLDG	INDEX
SHOWN	218-E-16	0900,0901

DRAWING NUMBER	SHEET	OF	REV
H-2-77586	1	2	0

H277586A1
C 12/29/88

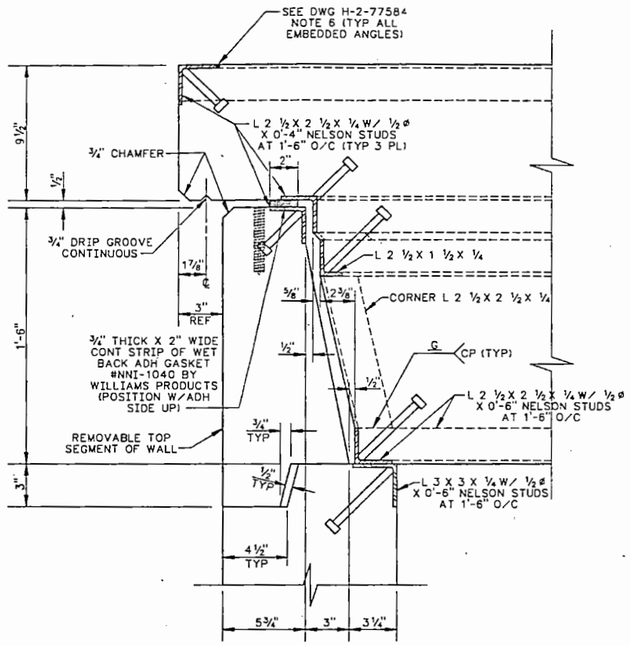

DETAIL 4
SCALE 3"=1'-0" H-2-77586 SH 1

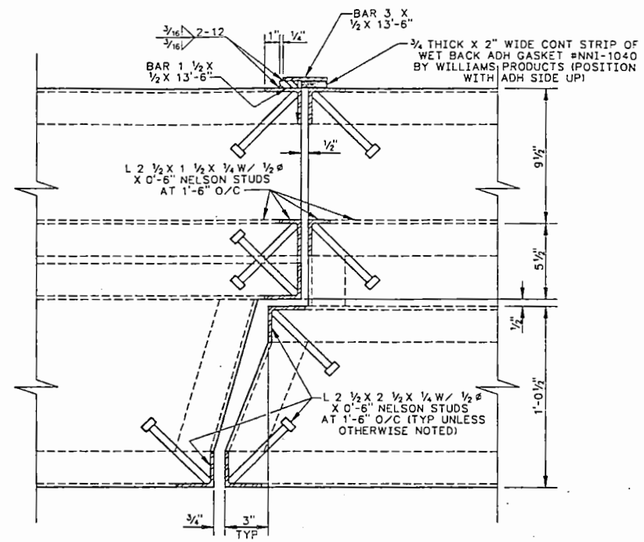

DETAIL 5
SCALE 3"=1'-0" H-2-77586 SH 1

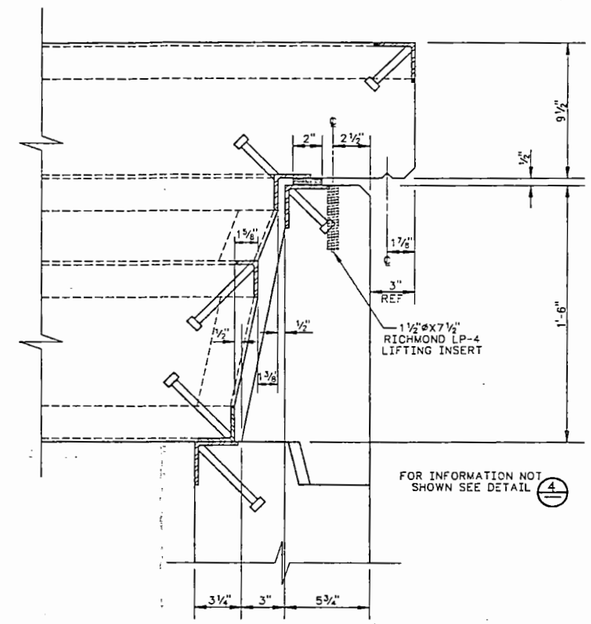

FOR INFORMATION NOT SHOWN SEE DETAIL 4

DETAIL 6
SCALE 3"=1'-0" H-2-77586 SH 1

OFFICIAL RELEASE BY WHC DATE APR 04 1989

EDT # 101089

IMPACT LEVEL 2

WHC APPROVAL BY	DATE 12-28 1988
PROJECT ENGR	12-28 1988
CAT ENGINEERING	6-13 1988
APPROVED BY WJM EA DUKLETH	6-13 1988
SAFETY RC HOLLENBECK AC MINISTER	6-6 1988
APPROVED DOPA WATER BY WJM D LIEN	6-6 1988
CHECKED BY CM CONSELMAN	6-13 1988
DRAWN BY RC CROSKREY	5-10 1988
DESIGNED BY RC CROSKREY	5-10 1988

U.S. DEPARTMENT OF ENERGY
RICHLAND OPERATIONS OFFICE
KAISER ENGINEERS HANFORD COMPANY

CIVIL
LEACHATE PIT SECTIONS & DETAILS

PROJECT TITLE: GROUT VAULT PAIR (218-E-16-102 & 103)

PROJ	PO	JOB
B-714	ER9090	—

SCALE	BLDG	INDEX
SHOWN	218-E-16	0901

DRAWING NUMBER	SHEET	OF	REV
H-2-77586	2	2	0

H277586A2
C 12/29/88

NUMBER	TITLE
	DRAWING TRACEABILITY LIST

NUMBER	TITLE
H-2-77573	DRAWING LIST
NEXT USED ON	REFERENCES

MICROFILMED

BY-DATE	BY-DATE	REV BY DATE	DESCRIPTION	REV
APPROVAL	KEH APPROVAL			
COMMENT REVIEW	REVISIONS			

9 7 7 5 8 6 3 0 7 1 1 0 6

VAULT 218-E-16-102

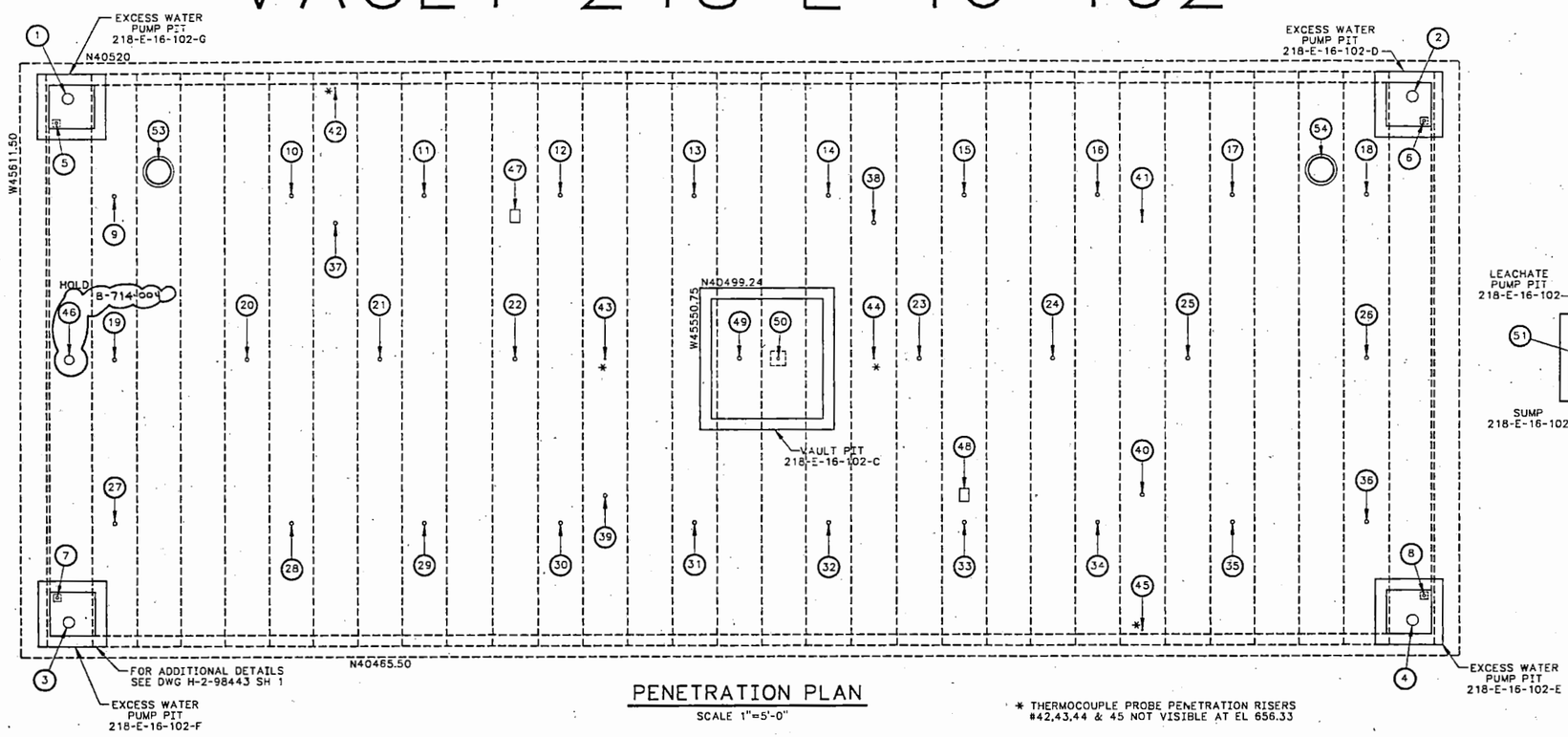

PENETRATION PLAN

SCALE 1"=5'-0"

* THERMOCOUPLE PROBE PENETRATION RISERS #42,43,44 & 45 NOT VISIBLE AT EL 656.33

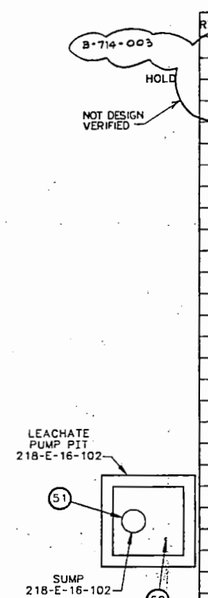

RISER NO	SIZE	FUNCTION (REF ONLY)	REFERENCE DET	REFERENCE DWG NO	NORTH	WEST
1	12"SCHED 40	PUMP 102-G	1	H-2-77602 SH 1	N40516.75	W45607.33
2	12"SCHED 40	PUMP 102-D	3	H-2-77602 SH 1	N40516.75	W45487.17
3	12"SCHED 40	PUMP 102-F	2	H-2-77602 SH 1	N40468.75	W45607.33
4	12"SCHED 40	PUMP 102-E	4	H-2-77602 SH 1	N40468.75	W45487.17
5	3"SCHED 40	PIT DRAIN	1	H-2-77602 SH 1	N40514.51	W45608.35
6	3"SCHED 40	PIT DRAIN	3	H-2-77602 SH 1	N40514.51	W45486.37
7	3"SCHED 40	PIT DRAIN	2	H-2-77602 SH 1	N40470.99	W45608.35
8	3"SCHED 40	PIT DRAIN	4	H-2-77602 SH 1	N40470.99	W45486.37
9	4"SCHED 40	GROUT CAP INJECTION PORT	5	H-2-77581 SH 2	N40507.75	W45603.25
10	4"SCHED 40	GROUT CAP INJECTION PORT	5	H-2-77581 SH 2	N40507.75	W45587.25
11	4"SCHED 40	GROUT CAP INJECTION PORT	5	H-2-77581 SH 2	N40507.75	W45575.25
12	4"SCHED 40	GROUT CAP INJECTION PORT	5	H-2-77581 SH 2	N40507.75	W45563.25
13	4"SCHED 40	GROUT CAP INJECTION PORT	5	H-2-77581 SH 2	N40507.75	W45551.25
14	4"SCHED 40	GROUT CAP INJECTION PORT	5	H-2-77581 SH 2	N40507.75	W45539.25
15	4"SCHED 40	GROUT CAP INJECTION PORT	5	H-2-77581 SH 2	N40507.75	W45527.25
16	4"SCHED 40	GROUT CAP INJECTION PORT	5	H-2-77581 SH 2	N40507.75	W45515.25
17	4"SCHED 40	GROUT CAP INJECTION PORT	5	H-2-77581 SH 2	N40507.75	W45503.25
18	4"SCHED 40	GROUT CAP INJECTION PORT	5	H-2-77581 SH 2	N40507.75	W45491.25
19	4"SCHED 40	GROUT CAP INJECTION PORT	5	H-2-77581 SH 2	N40492.75	W45603.25
20	4"SCHED 40	GROUT CAP INJECTION PORT	5	H-2-77581 SH 2	N40492.75	W45591.25
21	4"SCHED 40	GROUT CAP INJECTION PORT	5	H-2-77581 SH 2	N40492.75	W45579.25
22	4"SCHED 40	GROUT CAP INJECTION PORT	5	H-2-77581 SH 2	N40492.75	W45567.25
23	4"SCHED 40	GROUT CAP INJECTION PORT	5	H-2-77581 SH 2	N40492.75	W45531.25
24	4"SCHED 40	GROUT CAP INJECTION PORT	5	H-2-77581 SH 2	N40492.75	W45519.25
25	4"SCHED 40	GROUT CAP INJECTION PORT	5	H-2-77581 SH 2	N40492.75	W45507.25
26	4"SCHED 40	GROUT CAP INJECTION PORT	5	H-2-77581 SH 2	N40492.75	W45491.25
27	4"SCHED 40	GROUT CAP INJECTION PORT	5	H-2-77581 SH 2	N40477.75	W45603.25
28	4"SCHED 40	GROUT CAP INJECTION PORT	5	H-2-77581 SH 2	N40477.75	W45587.25
29	4"SCHED 40	GROUT CAP INJECTION PORT	5	H-2-77581 SH 2	N40477.75	W45575.25
30	4"SCHED 40	GROUT CAP INJECTION PORT	5	H-2-77581 SH 2	N40477.75	W45563.25
31	4"SCHED 40	GROUT CAP INJECTION PORT	5	H-2-77581 SH 2	N40477.75	W45551.25
32	4"SCHED 40	GROUT CAP INJECTION PORT	5	H-2-77581 SH 2	N40477.75	W45539.25
33	4"SCHED 40	GROUT CAP INJECTION PORT	5	H-2-77581 SH 2	N40477.75	W45527.25
34	4"SCHED 40	GROUT CAP INJECTION PORT	5	H-2-77581 SH 2	N40477.75	W45515.25
35	4"SCHED 40	GROUT CAP INJECTION PORT	5	H-2-77581 SH 2	N40477.75	W45503.25
36	4"SCHED 40	GROUT CAP INJECTION PORT	5	H-2-77581 SH 2	N40477.75	W45491.25
37	4"SCHED 40	LEVEL ELEMENT LE 102-1	2	H-2-77619	N40505.25	W45583.25
38	4"SCHED 40	LEVEL ELEMENT LE 102-3	2	H-2-77619	N40505.25	W45535.25
39	4"SCHED 40	LEVEL ELEMENT LE 102-2	2	H-2-77619	N40480.25	W45559.25
40	4"SCHED 40	LEVEL ELEMENT LE 102-4	2	H-2-77619	N40480.25	W45511.25
41	2"SCHED 40	VAULT PRESS XMTR PT 01 & PT 02	1	H-2-77619	N40505.25	W45511.25
42	1½"SCHED 40	TE-T-102-1	3	H-2-77619	N40517.62	W45583.25
43	1½"SCHED 40	TE-T-102-2	3	H-2-77619	N40492.75	W45559.25
44	1½"SCHED 40	TE-T-102-3	3	H-2-77619	N40492.75	W45535.25
45	1½"SCHED 40	TE-T-102-4	3	H-2-77619	N40467.87	W45511.25
46	10"SCHED 40	EXHAUSTER	8	H-2-77581 SH 2	N40492.75	W45607.25
47	TS 14X10X5/16	CLOSED CIRCUIT CCTV XE-01	4	H-2-77619	N40505.83	W45567.25
48	TS 14X10X5/16	CLOSED CIRCUIT CCTV XE-02	4	H-2-77619	N40480.25	W45527.25
49	4"SCHED 40	GROUTED WASTE DISCHARGE	4	H-2-77601	N40492.75	W45547.25
50	3"SCHED 40	PIT DRAIN	A	H-2-77608	N40492.75	W45543.75
51	2½"STD WT	PUMP 102-A	A	H-2-77605	N40492.75	W45475.25
52	3"SCHED 40	LEACHATE PIT DRAIN	4	H-2-77608	N40491.17	W45472.87
53	28"SCHED 40	MANWAY ACCESS	C	H-2-77581 SH 2	N40510	W45599.25
54	28"SCHED 40	MANWAY ACCESS	C	H-2-77581 SH 2	N40510	W45495.25

NOT DESIGN VERIFIED HOLD B-714-004

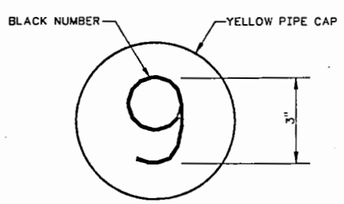

GROUT CAP INJECTION PORT
RISER #9 THRU 36

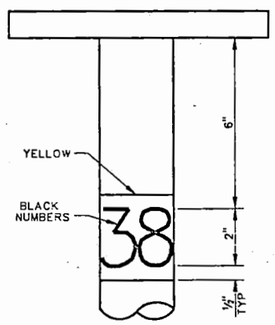

LEVEL ELEMENT
RISER #37 THRU 40

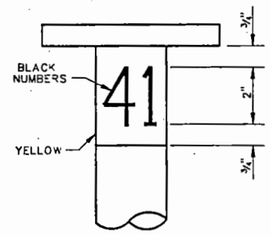

VAULT PRESSURE
TRANSMITTER
RISER #41

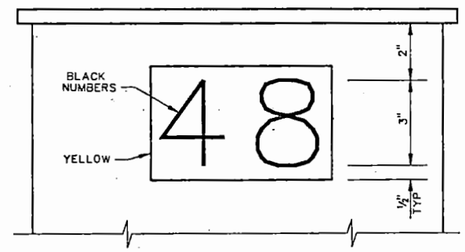

CLOSED CIRCUIT TV
RISER #47 & 48

RISER PAINTING DIAGRAMS

SCALE HALF

OFFICIAL RELEASE BY WHC DATE APR 04 1989

EDT = 101089

IMPACT LEVEL 3

WHC APPROVAL BY SR BRIGGS	DATE 12-28-1988	U.S. DEPARTMENT OF ENERGY RICHLAND OPERATIONS OFFICE
		KAISER ENGINEERS HANFORD COMPANY
DR H HENRICKSON	12-28-1988 / 10-3-1988	CIVIL PENETRATION PLAN VAULT 102
APPROVED BY WJM HP RAY	10-3-1988	
SAFETY D PARTHREE	10-3-1988	
APPROVED-CM WJM EA GOAKEY	10-3-1988	PROJECT TITLE GROUT VAULT PAIR (218-E-16-102 & 103)
CHECKED BY WJ MAGRUDER	7-25-1988	PROJ B-714 / WO ER9090 / JOB / SCALE 1"=5'-0" / CLASS 218-E-16 / INDEX CC
DRAWN BY RC CROSKREY	1-5-1988	DRAWING NUMBER H-2-77587 / SHEET 1 / OF 2 / REV C
DESIGNED BY RC CROSKREY	1-5-1988	

NUMBER	TITLE
DRAWING TRACEABILITY LIST	

NUMBER	TITLE	REFERENCES
H-2-77573	DRAWING LIST	NEXT USED ON

BY-DATE	BY-DATE	REV BY DATE	DESCRIPTION	REV
APPROVAL	KEH APPROVAL		REVISIONS	
COMMENT REVIEW				

MICROFILMED

H-2-77587 C 12/29/88

VAULT 218-E-16-103

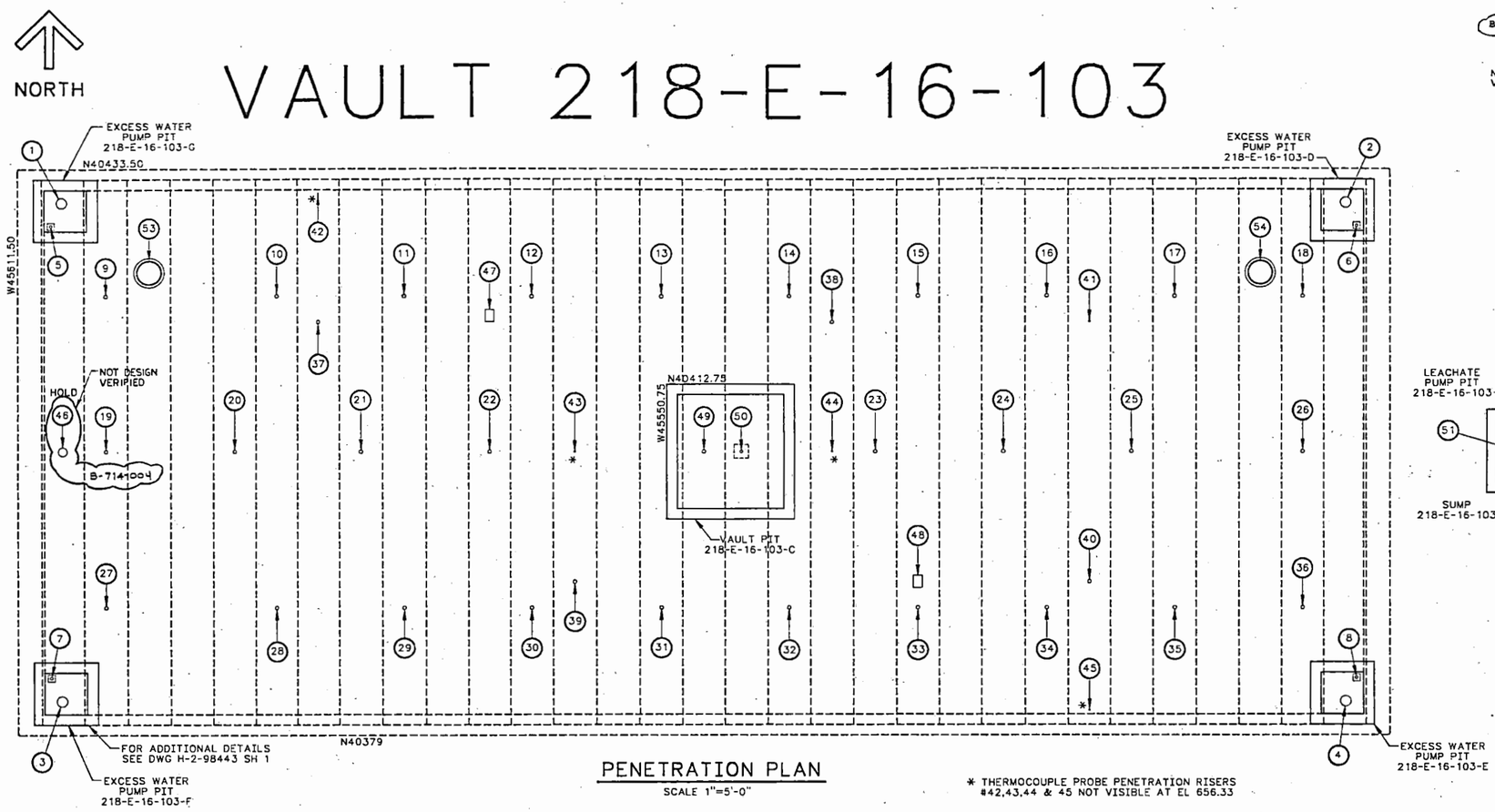

PENETRATION PLAN

SCALE 1"=5'-0"

* THERMOCOUPLE PROBE PENETRATION RISERS #42,43,44 & 45 NOT VISIBLE AT EL 656.33

RISER NO	SIZE	FUNCTION (REF ONLY)	REFERENCE DET	REFERENCE DWG NO	NORTH	WEST
1	12"SCHED 40	PUMP 102-G	1	H-2-77602 SH 1	N40430.25	W45607.33
2	12"SCHED 40	PUMP 102-D	3	H-2-77602 SH 1	N40430.25	W45487.17
3	12"SCHED 40	PUMP 102-F	2	H-2-77602 SH 1	N40382.25	W45607.33
4	12"SCHED 40	PUMP 102-E	4	H-2-77602 SH 1	N40382.25	W45487.17
5	3"SCHED 40	PIT DRAIN	1	H-2-77602 SH 1	N40425.01	W45608.35
6	3"SCHED 40	PIT DRAIN	3	H-2-77602 SH 1	N40428.01	W45486.37
7	3"SCHED 40	PIT DRAIN	2	H-2-77602 SH 1	N40384.49	W45608.35
8	3"SCHED 40	PIT DRAIN	4	H-2-77602 SH 1	N40384.49	W45486.37
9	4"SCHED 40	GROUT CAP INJECTION PORT	5	H-2-77581 SH 2	N40421.25	W45603.25
10	4"SCHED 40	GROUT CAP INJECTION PORT	5	H-2-77581 SH 2	N40421.25	W45587.25
11	4"SCHED 40	GROUT CAP INJECTION PORT	5	H-2-77581 SH 2	N40421.25	W45575.25
12	4"SCHED 40	GROUT CAP INJECTION PORT	5	H-2-77581 SH 2	N40421.25	W45563.25
13	4"SCHED 40	GROUT CAP INJECTION PORT	5	H-2-77581 SH 2	N40421.25	W45551.25
14	4"SCHED 40	GROUT CAP INJECTION PORT	5	H-2-77581 SH 2	N40421.25	W45539.25
15	4"SCHED 40	GROUT CAP INJECTION PORT	5	H-2-77581 SH 2	N40421.25	W45527.25
16	4"SCHED 40	GROUT CAP INJECTION PORT	5	H-2-77581 SH 2	N40421.25	W45515.25
17	4"SCHED 40	GROUT CAP INJECTION PORT	5	H-2-77581 SH 2	N40421.25	W45503.25
18	4"SCHED 40	GROUT CAP INJECTION PORT	5	H-2-77581 SH 2	N40421.25	W45491.25
19	4"SCHED 40	GROUT CAP INJECTION PORT	5	H-2-77581 SH 2	N40406.25	W45603.25
20	4"SCHED 40	GROUT CAP INJECTION PORT	5	H-2-77581 SH 2	N40406.25	W45591.25
21	4"SCHED 40	GROUT CAP INJECTION PORT	5	H-2-77581 SH 2	N40406.25	W45579.25
22	4"SCHED 40	GROUT CAP INJECTION PORT	5	H-2-77581 SH 2	N40406.25	W45567.25
23	4"SCHED 40	GROUT CAP INJECTION PORT	5	H-2-77581 SH 2	N40406.25	W45531.25
24	4"SCHED 40	GROUT CAP INJECTION PORT	5	H-2-77581 SH 2	N40406.25	W45519.25
25	4"SCHED 40	GROUT CAP INJECTION PORT	5	H-2-77581 SH 2	N40406.25	W45507.25
26	4"SCHED 40	GROUT CAP INJECTION PORT	5	H-2-77581 SH 2	N40406.25	W45491.25
27	4"SCHED 40	GROUT CAP INJECTION PORT	5	H-2-77581 SH 2	N40391.25	W45603.25
28	4"SCHED 40	GROUT CAP INJECTION PORT	5	H-2-77581 SH 2	N40391.25	W45587.25
29	4"SCHED 40	GROUT CAP INJECTION PORT	5	H-2-77581 SH 2	N40391.25	W45575.25
30	4"SCHED 40	GROUT CAP INJECTION PORT	5	H-2-77581 SH 2	N40391.25	W45563.25
31	4"SCHED 40	GROUT CAP INJECTION PORT	5	H-2-77581 SH 2	N40391.25	W45551.25
32	4"SCHED 40	GROUT CAP INJECTION PORT	5	H-2-77581 SH 2	N40391.25	W45539.25
33	4"SCHED 40	GROUT CAP INJECTION PORT	5	H-2-77581 SH 2	N40391.25	W45527.25
34	4"SCHED 40	GROUT CAP INJECTION PORT	5	H-2-77581 SH 2	N40391.25	W45515.25
35	4"SCHED 40	GROUT CAP INJECTION PORT	5	H-2-77581 SH 2	N40391.25	W45503.25
36	4"SCHED 40	GROUT CAP INJECTION PORT	5	H-2-77581 SH 2	N40391.25	W45491.25
37	4"SCHED 40	LEVEL ELEMENT LE 103-1	2	H-2-77619	N40418.75	W45583.25
38	4"SCHED 40	LEVEL ELEMENT LE 103-3	2	H-2-77619	N40418.75	W45535.25
39	4"SCHED 40	LEVEL ELEMENT LE 103-2	2	H-2-77619	N40393.75	W45559.25
40	4"SCHED 40	LEVEL ELEMENT LE 103-4	2	H-2-77619	N40393.75	W45511.25
41	2"SCHED 40	VAULT PRESS XMTR PT 01 & PT 02	1	H-2-77619	N40418.75	W45511.25
42	1½"SCHED 40	TE-T-103-1	3	H-2-77619	N40431.12	W45583.25
43	1½"SCHED 40	TE-T-103-2	3	H-2-77619	N40406.25	W45559.25
44	1½"SCHED 40	TE-T-103-3	3	H-2-77619	N40406.25	W45535.25
45	1½"SCHED 40	TE-T-103-4	3	H-2-77619	N40381.37	W45511.25
46	10"SCHED 40	EXHAUSTER	8	H-2-77581 SH 2	N40406.25	W45607.25
47	TS 14X10X5/16	CLOSED CIRCUIT CCTV XE-01	4	H-2-77619	N40419.33	W45567.25
48	TS 14X10X5/16	CLOSED CIRCUIT CCTV XE-02	4	H-2-77619	N40393.75	W45527.25
49	4"SCHED 40	GROUTED WASTE DISCHARGE	4	H-2-77601	N40406.25	W45547.25
50	3"SCHED 40	PIT DRAIN	A	H-2-77608	N40406.25	W45543.75
51	2G"STD WT	PUMP 102-A	A	H-2-77605	N40406.25	W45475.25
52	3"SCHED 40	LEACHATE PIT DRAIN	4	H-2-77608	N40404.67	W45472.87
53	28"SCHED 40	MANWAY ACCESS	C	H-2-77581 SH 2	N40423.50	W45599.25
54	28"SCHED 40	MANWAY ACCESS	C	H-2-77581 SH 2	N40423.50	W45495.25

B-714-003 HOLD NOT DESIGN VERIFIED

B-714-004 HOLD NOT DESIGN VERIFIED

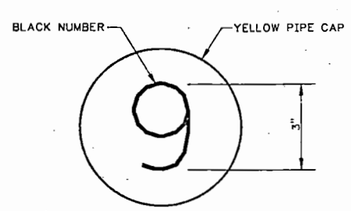

GROUT CAP INJECTION PORT
RISER #9 THRU 36

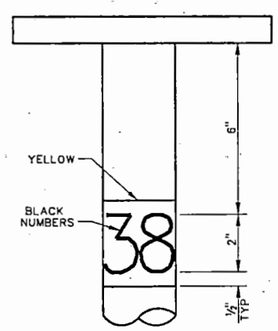

LEVEL ELEMENT
RISER #37 THRU 40

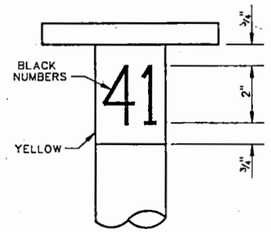

VAULT PRESSURE
TRANSMITTER
RISER #41

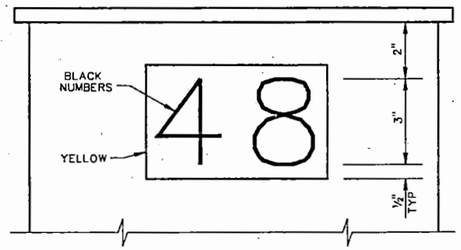

CLOSED CIRCUIT TV
RISER #47 & 48

RISER PAINTING DIAGRAMS

SCALE HALF

NUMBER	TITLE
	DRAWING TRACEABILITY LIST

NUMBER	TITLE
H-2-77573	DRAWING LIST

REFERENCES

NEXT USED ON

REV	DESCRIPTION	REV BY DATE	BY-DATE	BY-DATE
	REVISIONS		APPROVAL	KEH APPROVAL

MICROFILMED

COMMENT REVIEW

OFFICIAL RELEASE BY WHC DATE APR 04 1989

EDT # 101089

IMPACT LEVEL 2

WHC APPROVED 8/4/87 BY SE Barbas DATE 12-28-1988

U.S. DEPARTMENT OF ENERGY
RICHLAND OPERATIONS OFFICE
KAISER ENGINEERS HANFORD COMPANY

PROJ ENGR H HENRICKSON 10-3-1988
APPROVED BY WJM HP RAY 10-3-1988
SAFETY D PARTHREE 10-3-1988
APPROVED BY WJM EA COAKEY 10-3-1988
CHECKED BY WJ MAGRUDER 9-7-1988
DRAWN BY RC CROSKREY 1-5-1988
DESIGNED BY RC CROSKREY 1-5-1988

M CIVIL
PENETRATION PLAN
VAULT 103

PROJECT TITLE GROUT VAULT PAIR (218-E-16-102 & 103)
PROJ B-714 WO ER9090 JOB
SCALE 1"=5'-0" BLDG 218-E-16 INDEX 090C
DRAWING NUMBER H-2-77587 SHEET 2 OF 2 REV 0

H-2-77587A2
12/30/88

VAULT 218-E-16-102

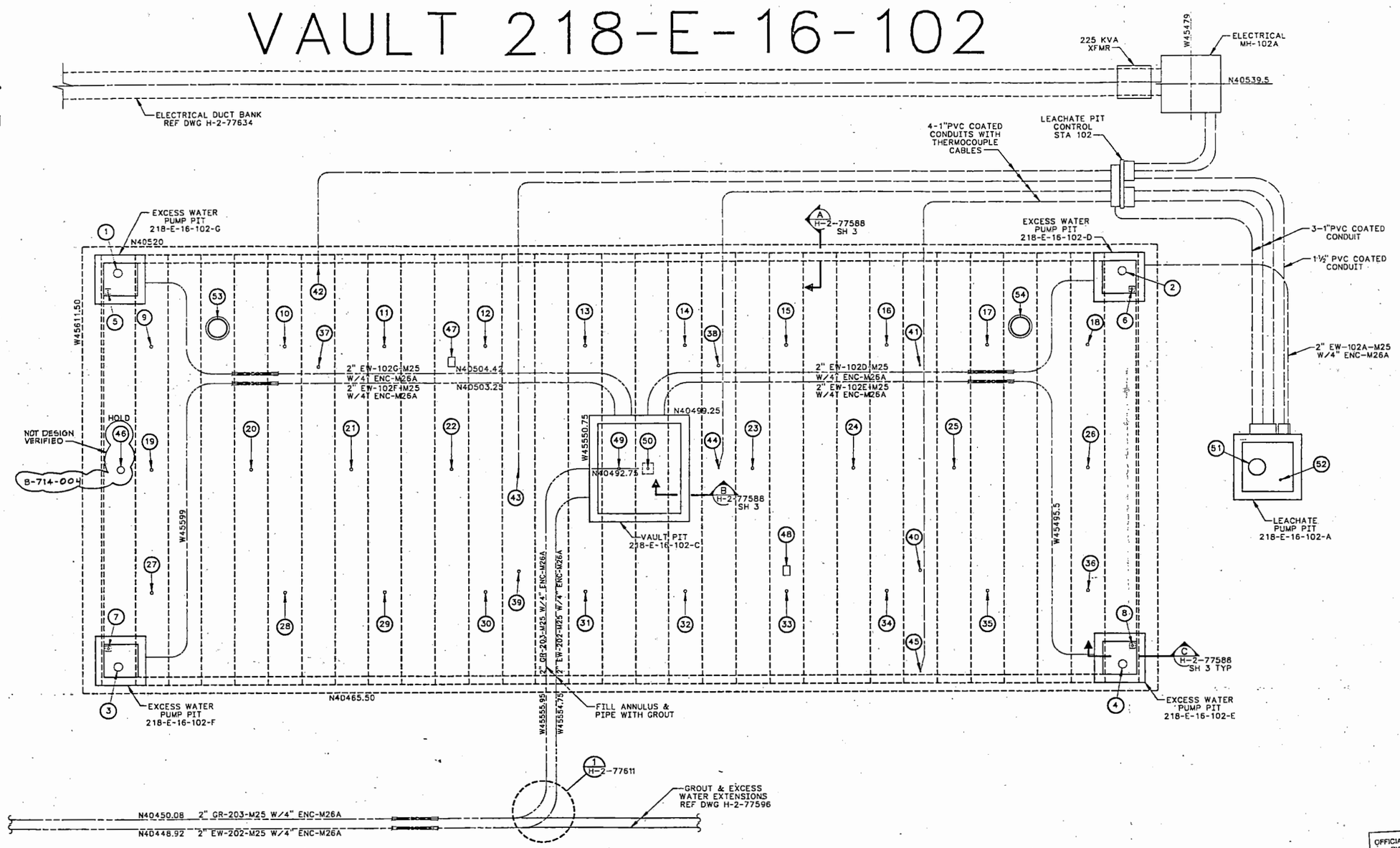

VAULT ISOLATION PLAN

SCALE 1"=5'

OFFICIAL RELEASE BY WHC DATE APR 04 1989

EDT #101089

IMPACT LEVEL 2

WHC APPROVAL 1/6/89 BY	DATE 12-28-1988	U.S. DEPARTMENT OF ENERGY RICHLAND OPERATIONS OFFICE
		KAISER ENGINEERS HANFORD COMPANY
PROJECT ENGINEER W J MAGRUDER	12-28-1988	M CIVIL VAULT ISOLATION VAULT 102 PLAN
DR H HENRICKSON	9-30-1988	
APPROVED BY WJM HP RAY	9-30-1988	
SAFETY D PARTHREE	9-28-1988	
APPROVED BY WJM D LIEN	9-28-1988	PROJECT TITLE GROUT VAULT PAIR (218-E-16-102 & 103)
CHECKED BY WJ MAGRUDER	9-15-1988	PROJ B-714 / RC ER9090 / JOB
DRAWN BY RC CROSKREY	1-5-1988	SCALE 1"=5'-0" / BLDG 218-E-16 / INDEX 0900
DESIGNED BY RC CROSKREY	1-5-1988	DRAWING NUMBER H-2-77588 / SHEET 1 / OF 5 / REV 0

NUMBER	TITLE	REFERENCES
H-2-77573	DRAWING LIST	

DRAWING TRACEABILITY LIST — NEXT USED ON H-2-77588 SH 2

BY-DATE	BY-DATE	REV BY DATE	DESCRIPTION	REV
APPROVAL: KEH APPROVAL			REVISIONS	

MICROFILMED — COMMENT REVIEW

H277588A1 C 12/29/88

0113097

RISERS

	RISER NO	SIZE	FUNCTION (REF ONLY)	REFERENCE DET	REFERENCE DWG NO	NORTH	WEST	CLOSURE ACTION	COMMENTS	COMP. DATE
B-714-003 HOLD NOT DESIGN VERIFIED	1	12"SCHED 40	PUMP 102-G	1	H-2-77602 SH 1	N40516.75	W45607.33	REMOVE EXCESS WATER PUMP		
	2	12"SCHED 40	PUMP 102-D	3	H-2-77602 SH 1	N40516.75	W45487.17	REMOVE EXCESS WATER PUMP		
	3	12"SCHED 40	PUMP 102-F	2	H-2-77602 SH 1	N40468.75	W45607.33	REMOVE EXCESS WATER PUMP		
	4	12"SCHED 40	PUMP 102-E	4	H-2-77602 SH 1	N40468.75	W45487.17	REMOVE EXCESS WATER PUMP		
	5	3"SCHED 40	PIT DRAIN	1	H-2-77602 SH 1	N40514.51	W45608.35	REMOVE DRAIN SEAL & HANDLE		
	6	3"SCHED 40	PIT DRAIN	3	H-2-77602 SH 1	N40514.51	W45486.37	REMOVE DRAIN SEAL & HANDLE		
	7	3"SCHED 40	PIT DRAIN	2	H-2-77602 SH 1	N40470.99	W45608.35	REMOVE DRAIN SEAL & HANDLE		
	8	3"SCHED 40	PIT DRAIN	4	H-2-77602 SH 1	N40470.99	W45486.37	REMOVE DRAIN SEAL & HANDLE		
	9	4"SCHED 40	GROUT CAP INJECTION PORT	5	H-2-77581 SH 2	N40507.75	W45603.25	DETAIL 1 DRAWING H-2-77588 SH 3		
	10	4"SCHED 40	GROUT CAP INJECTION PORT	5	H-2-77581 SH 2	N40507.75	W45587.25	DETAIL 1 DRAWING H-2-77588 SH 3		
	11	4"SCHED 40	GROUT CAP INJECTION PORT	5	H-2-77581 SH 2	N40507.75	W45575.25	DETAIL 1 DRAWING H-2-77588 SH 3		
	12	4"SCHED 40	GROUT CAP INJECTION PORT	5	H-2-77581 SH 2	N40507.75	W45563.25	DETAIL 1 DRAWING H-2-77588 SH 3		
	13	4"SCHED 40	GROUT CAP INJECTION PORT	5	H-2-77581 SH 2	N40507.75	W45551.25	DETAIL 1 DRAWING H-2-77588 SH 3		
	14	4"SCHED 40	GROUT CAP INJECTION PORT	5	H-2-77581 SH 2	N40507.75	W45539.25	DETAIL 1 DRAWING H-2-77588 SH 3		
	15	4"SCHED 40	GROUT CAP INJECTION PORT	5	H-2-77581 SH 2	N40507.75	W45527.25	DETAIL 1 DRAWING H-2-77588 SH 3		
	16	4"SCHED 40	GROUT CAP INJECTION PORT	5	H-2-77581 SH 2	N40507.75	W45515.25	DETAIL 1 DRAWING H-2-77588 SH 3		
	17	4"SCHED 40	GROUT CAP INJECTION PORT	5	H-2-77581 SH 2	N40507.75	W45503.25	DETAIL 1 DRAWING H-2-77588 SH 3		
	18	4"SCHED 40	GROUT CAP INJECTION PORT	5	H-2-77581 SH 2	N40507.75	W45491.25	DETAIL 1 DRAWING H-2-77588 SH 3		
	19	4"SCHED 40	GROUT CAP INJECTION PORT	5	H-2-77581 SH 2	N40492.75	W45603.25	DETAIL 1 DRAWING H-2-77588 SH 3		
	20	4"SCHED 40	GROUT CAP INJECTION PORT	5	H-2-77581 SH 2	N40492.75	W45591.25	DETAIL 1 DRAWING H-2-77588 SH 3		
	21	4"SCHED 40	GROUT CAP INJECTION PORT	5	H-2-77581 SH 2	N40492.75	W45579.25	DETAIL 1 DRAWING H-2-77588 SH 3		
	22	4"SCHED 40	GROUT CAP INJECTION PORT	5	H-2-77581 SH 2	N40492.75	W45567.25	DETAIL 1 DRAWING H-2-77588 SH 3		
	23	4"SCHED 40	GROUT CAP INJECTION PORT	5	H-2-77581 SH 2	N40492.75	W45531.25	DETAIL 1 DRAWING H-2-77588 SH 3		
	24	4"SCHED 40	GROUT CAP INJECTION PORT	5	H-2-77581 SH 2	N40492.75	W45519.25	DETAIL 1 DRAWING H-2-77588 SH 3		
	25	4"SCHED 40	GROUT CAP INJECTION PORT	5	H-2-77581 SH 2	N40492.75	W45507.25	DETAIL 1 DRAWING H-2-77588 SH 3		
	26	4"SCHED 40	GROUT CAP INJECTION PORT	5	H-2-77581 SH 2	N40492.75	W45491.25	DETAIL 1 DRAWING H-2-77588 SH 3		
	27	4"SCHED 40	GROUT CAP INJECTION PORT	5	H-2-77581 SH 2	N40477.75	W45603.25	DETAIL 1 DRAWING H-2-77588 SH 3		
	28	4"SCHED 40	GROUT CAP INJECTION PORT	5	H-2-77581 SH 2	N40477.75	W45587.25	DETAIL 1 DRAWING H-2-77588 SH 3		
	29	4"SCHED 40	GROUT CAP INJECTION PORT	5	H-2-77581 SH 2	N40477.75	W45575.25	DETAIL 1 DRAWING H-2-77588 SH 3		
	30	4"SCHED 40	GROUT CAP INJECTION PORT	5	H-2-77581 SH 2	N40477.75	W45563.25	DETAIL 1 DRAWING H-2-77588 SH 3		
	31	4"SCHED 40	GROUT CAP INJECTION PORT	5	H-2-77581 SH 2	N40477.75	W45551.25	DETAIL 1 DRAWING H-2-77588 SH 3		
	32	4"SCHED 40	GROUT CAP INJECTION PORT	5	H-2-77581 SH 2	N40477.75	W45539.25	DETAIL 1 DRAWING H-2-77588 SH 3		
	33	4"SCHED 40	GROUT CAP INJECTION PORT	5	H-2-77581 SH 2	N40477.75	W45527.25	DETAIL 1 DRAWING H-2-77588 SH 3		
	34	4"SCHED 40	GROUT CAP INJECTION PORT	5	H-2-77581 SH 2	N40477.75	W45515.25	DETAIL 1 DRAWING H-2-77588 SH 3		
	35	4"SCHED 40	GROUT CAP INJECTION PORT	5	H-2-77581 SH 2	N40477.75	W45503.25	DETAIL 1 DRAWING H-2-77588 SH 3		
	36	4"SCHED 40	GROUT CAP INJECTION PORT	5	H-2-77581 SH 2	N40477.75	W45491.25	DETAIL 1 DRAWING H-2-77588 SH 3		
	37	4"SCHED 40	LEVEL ELEMENT LE 102-1	2	H-2-77619	N40505.25	W45583.25	DETAIL 3 DRAWING H-2-77588 SH 3		
	38	4"SCHED 40	LEVEL ELEMENT LE 102-3	2	H-2-77619	N40505.25	W45535.25	DETAIL 3 DRAWING H-2-77588 SH 3		
	39	4"SCHED 40	LEVEL ELEMENT LE 102-2	2	H-2-77619	N40480.25	W45559.25	DETAIL 3 DRAWING H-2-77588 SH 3		
	40	4"SCHED 40	LEVEL ELEMENT LE 102-4	2	H-2-77619	N40480.25	W45511.25	DETAIL 3 DRAWING H-2-77588 SH 3		
	41	2"SCHED 40	VAULT PRESS XMTR PT 01 & PT 02	1	H-2-77619	N40505.25	W45511.25	DETAIL 2 DRAWING H-2-77588 SH 3		
	42	1½"SCHED 40	TE-T-102-1	3	H-2-77619	N40517.62	W45583.25	NO ACTION REQUIRED		
	43	1½"SCHED 40	TE-T-102-2	3	H-2-77619	N40492.75	W45559.25	NO ACTION REQUIRED		
	44	1½"SCHED 40	TE-T-102-3	3	H-2-77619	N40492.75	W45535.25	NO ACTION REQUIRED		
B-714-004 HOLD NOT DESIGN VERIFIED	45	1½"SCHED 40	TE-T-102-4	3	H-2-77619	N40467.87	W45511.25	NO ACTION REQUIRED		
	46	10"SCHED 40	EXHAUSTER	8	H-2-77581 SH 2	N40492.75	W45607.25	DETAIL 4 DRAWING H-2-77588 SH 3 SIM		
	47	TS 14X10X3/16	CLOSED CIRCUIT CCTV XE-01	4	H-2-77619	N40505.83	W45567.25	DETAIL 4 DRAWING H-2-77588 SH 3		
	48	TS 14X10X3/16	CLOSED CIRCUIT CCTV XE-02	4	H-2-77619	N40480.25	W45527.25	DETAIL 4 DRAWING H-2-77588 SH 3		
	49	4"SCHED 40	GROUTED WASTE DISCHARGE	4	H-2-77601	N40492.75	W45547.25	FILL WITH GROUT		
	50	3"SCHED 40	PIT DRAIN	A	H-2-77608	N40492.75	W45543.75	REMOVE DRAIN SEAL & HANDLE		
	51	26"STD WT	PUMP 102-A	A	H-2-77605	N40492.75	W45475.25	REMOVE PUMP (H-2-77616) & REPLACE W/PUMP (H-2-77614)		
	52	3"SCHED 40	LEACHATE PIT DRAIN	A	H-2-77608	N40491.17	W45472.87	NO ACTION REQUIRED		
	53	28"SCHED 40	MANWAY ACCESS	C	H-2-77581 SH 2	N40510	W45599.25	NO ACTION REQUIRED		
	54	28"SCHED 40	MANWAY ACCESS	C	H-2-77581 SH 2	N40510	W45495.25	NO ACTION REQUIRED		

PITS

PIT NO	REF DWG NO	NORTH	WEST	CLOSURE ACTION	COMMENTS	COMP. DATE
218-E-16-102-C	H-2-77601	N40499.25	W45550.75	SECTION B DWG H-2-77588 SH 3		
218-E-16-102-D	H-2-77602	N40519.00	W45484.50	SECTION C DWG H-2-77588 SH 3		
218-E-16-102-E	H-2-77602	N40472.50	W45484.50	SECTION C DWG H-2-77588 SH 3		
218-E-16-102-F	H-2-77602	N40472.50	W45610.00	SECTION C DWG H-2-77588 SH 3		
218-E-16-102-G	H-2-77602	N40519.00	W45610.00	SECTION C DWG H-2-77588 SH 3		
218-E-16-102-A	H-2-77612	N40496.75	W45467.00	H-2-77592		

PIPING

PIPE NO	REF DWG NO	CLOSURE ACTION	COMMENTS	COMP. DATE
2"EW-102D	H-2-77596	FILL PIPE WITH GROUT		
4"EW-102D ENCASEMENT	H-2-77596	FILL ANNULUS WITH GROUT		
2"EW-102E	H-2-77596	FILL PIPE WITH GROUT		
4"EW-102E ENCASEMENT	H-2-77596	FILL ANNULUS WITH GROUT		
2"EW-102F	H-2-77596	FILL PIPE WITH GROUT		
4"EW-102F ENCASEMENT	H-2-77596	FILL ANNULUS WITH GROUT		
2"EW-102G	H-2-77596	FILL PIPE WITH GROUT		
4"EW-102G ENCASEMENT	H-2-77596	FILL ANNULUS WITH GROUT		
2"GR-202	H-2-77596	DET 1 H-2-77611 SH 1		
4"GR-102 ENCASEMENT	H-2-77596	DET 1 H-2-77611 SH 1		
2"EW-203	H-2-77596	DET 1 H-2-77611 SH 1		
4"EW-102 ENCASEMENT	H-2-77596	DET 1 H-2-77611 SH 1		

ELECTRICAL

ITEM	REF DWG NO	CLOSURE ACTION	COMMENTS	COMP. DATE
MH-102A	H-2-77638 SH 3 DET 1	REMOVE 225 KVA XFMR CAP CONDUITS P 52 & P 53 RAISE MH COVER H-2-77592		
LEACHATE CONTROL STATION 102	H-2-77639 SH 2	RAISE LEACHATE CONTROL STATION		

OFFICIAL RELEASE BY WHC DATE APR 04 1989

EDT # 101089

IMPACT LEVEL 2

WHC APPROVAL 1/20/89 BY SRAGGS	DATE 12-28-1988	U.S. DEPARTMENT OF ENERGY RICHLAND OPERATIONS OFFICE
		KAISER ENGINEERS HANFORD COMPANY
PREPARED BY W C CLOUD	12-28-1988	CIVIL VAULT ISOLATION VAULT 102 PENETRATIONS
PROJECT ENGR H HENRICKSON	9-30-1988	
APPROVED BY WJM HP RAY	9-30-1988	
SAFETY D PARTHREE	9-28-1988	PROJECT TITLE GROUT VAULT PAIR (218-E-16-102 & 103)
APPROVED BY WJM D LIEN	9-28-1988	
CHECKED BY WJ MACRUDER	9-15-1988	PROJ B-714 ED ER9090 JOB
DRAWN BY RC CROSKREY	1-5-1988	SCALE SHOWN BLDG 218-E-16 INDEX D901
DESIGNED BY RC CROSKREY	1-5-1988	DRAWING NUMBER H-2-77588 SHEET 2 OF 5 REV 0

NUMBER	TITLE
DRAWING TRACEABILITY LIST	

NUMBER	TITLE
H-2-77573	DRAWING LIST
REFERENCES	
NEXT USED ON H-2-77588 SH 3	

BY-DATE	BY-DATE	REV BY DATE	DESCRIPTION	REV
APPROVAL	KEH APPROVAL		REVISIONS	
COMMENT REVIEW				

MICROFILMED

H277588A2 C 12/29/88

1 1 7 6 0 3 1

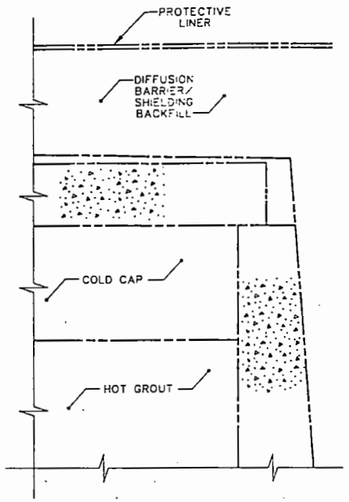

SECTION A
SCALE ½"=1'-0" H-2-77588 SH 1 & SH 4

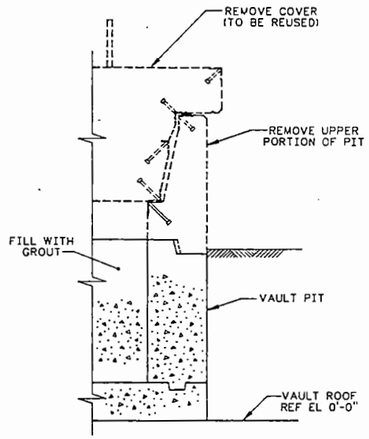

REMOVE PRIOR TO GROUTING:
1- JUMPER ASSEMBLY
2- DRAIN SEAL AND HANDLE
3- LEAK DETECTOR ASSEMBLY

SECTION B
SCALE 1"=1'-0" H-2-77588 SH 1 & SH 4

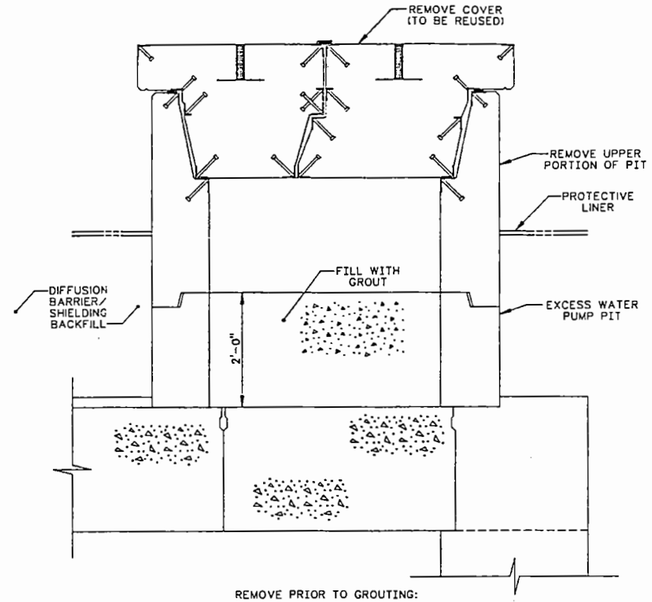

REMOVE PRIOR TO GROUTING:
1- EXCESS WATER PUMP PIT ASSY
2- DRAIN SEAL AND HANDLE
3- LEAK DETECTOR ASSEMBLY

SECTION C
SCALE 1"=1'-0" H-2-77588 SH 1 & SH 4

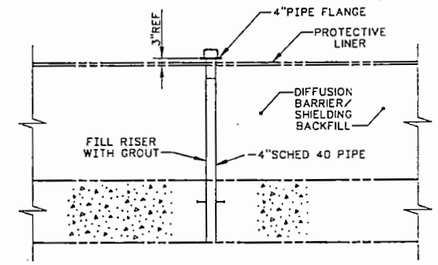

DETAIL 1
GROUT CAP INJECTION PORT
SCALE ½"=1'-0"

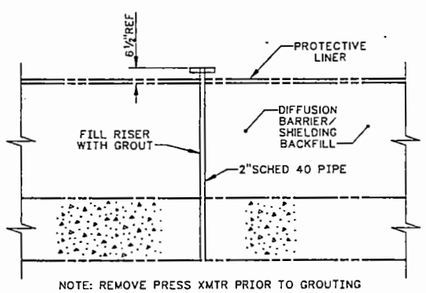

NOTE: REMOVE PRESS XMTR PRIOR TO GROUTING

DETAIL 2
VAULT PRESS XMTR PEN RISER
SCALE ½"=1'-0"

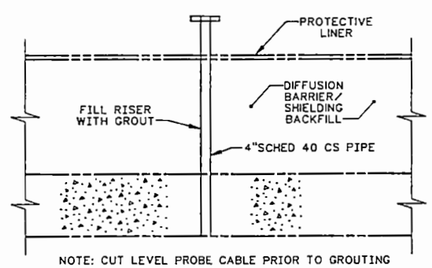

NOTE: CUT LEVEL PROBE CABLE PRIOR TO GROUTING

DETAIL 3
LEVEL PROBE PEN RISER
SCALE ½"=1'-0"

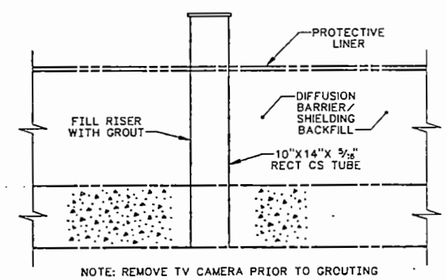

NOTE: REMOVE TV CAMERA PRIOR TO GROUTING

DETAIL 4
TV CAMERA PEN RISER
SCALE ½"=1'-0"

OFFICIAL RELEASE BY WHC
DATE APR 04 1989

EDT # 101087

IMPACT LEVEL 2

NUMBER	TITLE
	DRAWING TRACEABILITY LIST

NUMBER	TITLE
H-2-77573	DRAWING LIST
REFERENCES	
NEXT USED ON	

BY-DATE	BY-DATE	REV BY DATE	DESCRIPTION	REV
APPROVAL	KEH APPROVAL		REVISIONS	
COMMENT REVIEW				

MICROFILMED

WHC APPROVAL 11/10/87 BY B.A. BIGGS 12-28-1988

U.S. DEPARTMENT OF ENERGY
RICHLAND OPERATIONS OFFICE
KAISER ENGINEERS HANFORD COMPANY

		DATE
PROJ ENGR	D WOOD	12-28-1988
DR	R HENRICKSON	9-30-1988
APPROVED BY	WJM HP RAY	9-30-1988
SAFETY	D PARTHREE	9-28-1988
APPROVED BY	WJM D LIEN	9-28-1988
CHECKED BY	WJ MAGRUDER	9-15-1988
DRAWN BY	RC CROSKREY	1-5-1988
DESIGNED BY	RC CROSKREY	1-5-1988

CIVIL
VAULT ISOLATION
MISC DETAILS

PROJECT TITLE: GROUT VAULT PAIR (218-E-16-102 & 103)

PROJ	WO	JOB
B-714	ER9090	—
SCALE SHOWN	BLDG 218-E-16	INDEX 090'

DRAWING NUMBER H-2-77588 | SHEET 3 OF 5 | REV 0

H277588A3
C 12/29/88

VAULT 218-E-16-103

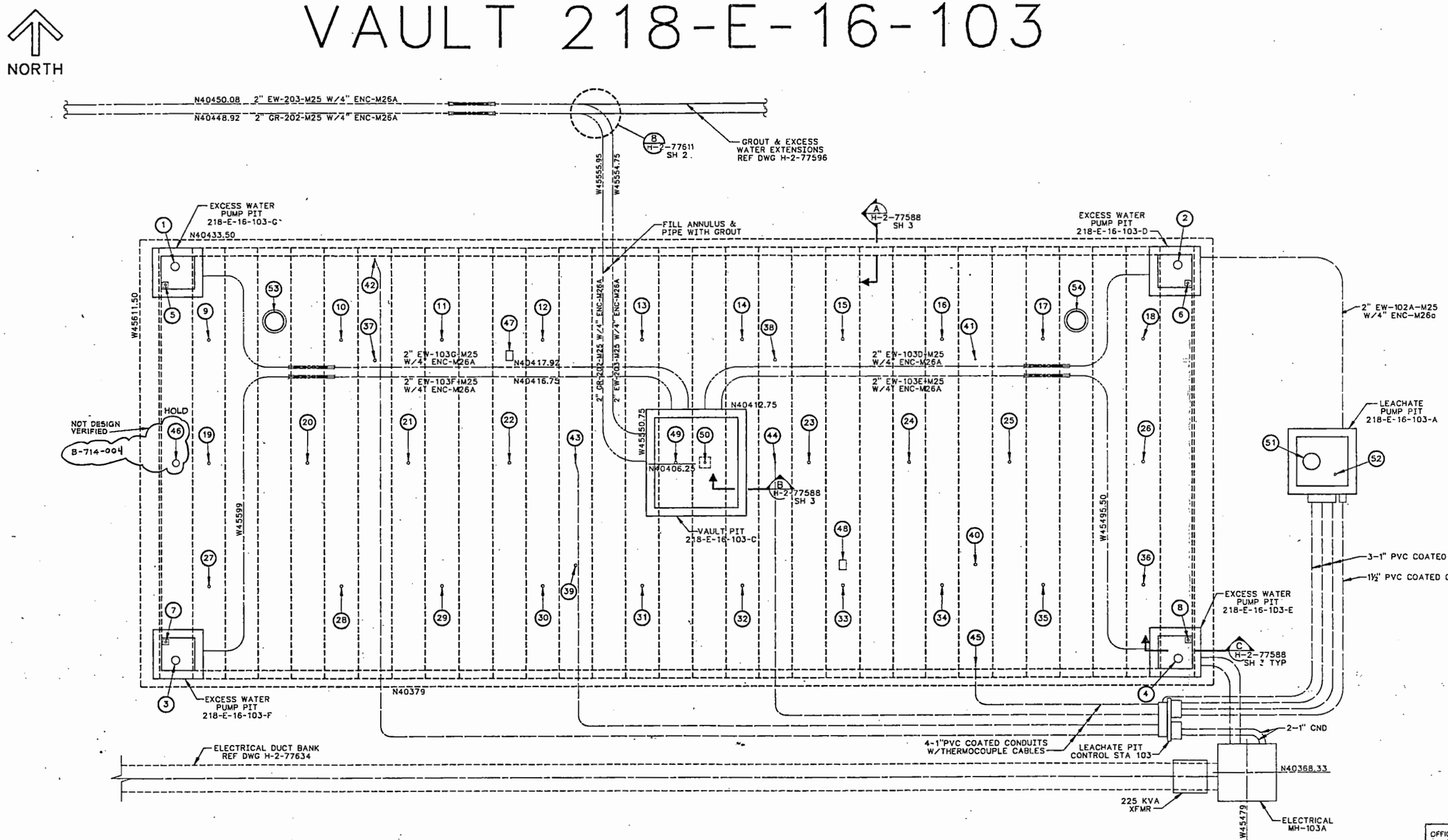

VAULT ISOLATION PLAN

SCALE 1"=5'

OFFICIAL RELEASE BY WHC DATE APR 04 1989

EDT # 101089

IMPACT LEVEL 2

WHC APPROVED BY	DATE 7-28-1988	U.S. DEPARTMENT OF ENERGY RICHLAND OPERATIONS OFFICE
		KAISER ENGINEERS HANFORD COMPANY
DRAWN BY H HENRICKSON	12-28-1988	CIVIL
APPROVED BY WJM HP RAY	9-30-1988	VAULT ISOLATION VAULT 103 PLAN
SAFETY D PARTHREE	9-30-1988	
APPROVED BY WJM D LIEN	9-28-1988	PROJECT TITLE GROUT VAULT PAIR (218-E-16-102 & 103)
CHECKED BY WJ MAGRUDER	9-28-1988	PROJ B-714 SO ER9090 JOB
DRAWN BY RC CROSKREY	9-15-1988	SCALE 1"=5'-0" BLDG 218-E-16 INDEX 0900
DESIGNED BY RC CROSKREY	1-5-1988	DRAWING NUMBER H-2-77588 SHEET 4 OF 5 REV 0

NUMBER	TITLE
DRAWING TRACEABILITY LIST	

NUMBER	TITLE
H-2-77573	DRAWING LIST
REFERENCES	
NEXT USED ON H-2-77588 SH 5	

BY-DATE	BY-DATE	REV BY DATE	DESCRIPTION	REV
APPROVAL	KEH APPROVAL			
REVISIONS				
COMMENT REVIEW				

MICROFILMED

H27588A4 C 12/29/88

RISERS

	RISER NO	SIZE	FUNCTION (REF ONLY)	REFERENCE DET	REFERENCE DWG NO	NORTH	WEST	CLOSURE ACTION	COMMENTS	COMP. DATE
B-714-003	1	12"SCHED 40	PUMP 103-G	1	H-2-77602 SH 1	N40430.25	W45607.33	REMOVE EXCESS WATER PUMP		
HOLD	2	12"SCHED 40	PUMP 103-D	3	H-2-77602 SH 1	N40430.25	W45487.17	REMOVE EXCESS WATER PUMP		
	3	12"SCHED 40	PUMP 103-F	2	H-2-77602 SH 1	N40382.25	W45607.33	REMOVE EXCESS WATER PUMP		
NOT DESIGN VERIFIED	4	12"SCHED 40	PUMP 103-E	4	H-2-77602 SH 1	N40382.25	W45487.17	REMOVE EXCESS WATER PUMP		
	5	3"SCHED 40	PIT DRAIN	1	H-2-77602 SH 1	N40428.01	W45608.35	REMOVE DRAIN SEAL & HANDLE		
	6	3"SCHED 40	PIT DRAIN	3	H-2-77602 SH 1	N40428.01	W45486.37	REMOVE DRAIN SEAL & HANDLE		
	7	3"SCHED 40	PIT DRAIN	2	H-2-77602 SH 1	N40384.49	W45608.35	REMOVE DRAIN SEAL & HANDLE		
	8	3"SCHED 40	PIT DRAIN	4	H-2-77602 SH 1	N40384.49	W45486.37	REMOVE DRAIN SEAL & HANDLE		
	9	4"SCHED 40	GROUT CAP INJECTION PORT	5	H-2-77581 SH 2	N40421.25	W45603.25	DETAIL 1 DRAWING H-2-77588 SH 3		
	10	4"SCHED 40	GROUT CAP INJECTION PORT	5	H-2-77581 SH 2	N40421.25	W45587.25	DETAIL 1 DRAWING H-2-77588 SH 3		
	11	4"SCHED 40	GROUT CAP INJECTION PORT	5	H-2-77581 SH 2	N40421.25	W45575.25	DETAIL 1 DRAWING H-2-77588 SH 3		
	12	4"SCHED 40	GROUT CAP INJECTION PORT	5	H-2-77581 SH 2	N40421.25	W45563.25	DETAIL 1 DRAWING H-2-77588 SH 3		
	13	4"SCHED 40	GROUT CAP INJECTION PORT	5	H-2-77581 SH 2	N40421.25	W45551.25	DETAIL 1 DRAWING H-2-77588 SH 3		
	14	4"SCHED 40	GROUT CAP INJECTION PORT	5	H-2-77581 SH 2	N40421.25	W45539.25	DETAIL 1 DRAWING H-2-77588 SH 3		
	15	4"SCHED 40	GROUT CAP INJECTION PORT	5	H-2-77581 SH 2	N40421.25	W45527.25	DETAIL 1 DRAWING H-2-77588 SH 3		
	16	4"SCHED 40	GROUT CAP INJECTION PORT	5	H-2-77581 SH 2	N40421.25	W45515.25	DETAIL 1 DRAWING H-2-77588 SH 3		
	17	4"SCHED 40	GROUT CAP INJECTION PORT	5	H-2-77581 SH 2	N40421.25	W45503.25	DETAIL 1 DRAWING H-2-77588 SH 3		
	18	4"SCHED 40	GROUT CAP INJECTION PORT	5	H-2-77581 SH 2	N40421.25	W45491.25	DETAIL 1 DRAWING H-2-77588 SH 3		
	19	4"SCHED 40	GROUT CAP INJECTION PORT	5	H-2-77581 SH 2	N40406.25	W45603.25	DETAIL 1 DRAWING H-2-77588 SH 3		
	20	4"SCHED 40	GROUT CAP INJECTION PORT	5	H-2-77581 SH 2	N40406.25	W45591.25	DETAIL 1 DRAWING H-2-77588 SH 3		
	21	4"SCHED 40	GROUT CAP INJECTION PORT	5	H-2-77581 SH 2	N40406.25	W45579.25	DETAIL 1 DRAWING H-2-77588 SH 3		
	22	4"SCHED 40	GROUT CAP INJECTION PORT	5	H-2-77581 SH 2	N40406.25	W45567.25	DETAIL 1 DRAWING H-2-77588 SH 3		
	23	4"SCHED 40	GROUT CAP INJECTION PORT	5	H-2-77581 SH 2	N40406.25	W45531.25	DETAIL 1 DRAWING H-2-77588 SH 3		
	24	4"SCHED 40	GROUT CAP INJECTION PORT	5	H-2-77581 SH 2	N40406.25	W45519.25	DETAIL 1 DRAWING H-2-77588 SH 3		
	25	4"SCHED 40	GROUT CAP INJECTION PORT	5	H-2-77581 SH 2	N40406.25	W45507.25	DETAIL 1 DRAWING H-2-77588 SH 3		
	26	4"SCHED 40	GROUT CAP INJECTION PORT	5	H-2-77581 SH 2	N40406.25	W45491.25	DETAIL 1 DRAWING H-2-77588 SH 3		
	27	4"SCHED 40	GROUT CAP INJECTION PORT	5	H-2-77581 SH 2	N40391.25	W45603.25	DETAIL 1 DRAWING H-2-77588 SH 3		
	28	4"SCHED 40	GROUT CAP INJECTION PORT	5	H-2-77581 SH 2	N40391.25	W45587.25	DETAIL 1 DRAWING H-2-77588 SH 3		
	29	4"SCHED 40	GROUT CAP INJECTION PORT	5	H-2-77581 SH 2	N40391.25	W45575.25	DETAIL 1 DRAWING H-2-77588 SH 3		
	30	4"SCHED 40	GROUT CAP INJECTION PORT	5	H-2-77581 SH 2	N40391.25	W45563.25	DETAIL 1 DRAWING H-2-77588 SH 3		
	31	4"SCHED 40	GROUT CAP INJECTION PORT	5	H-2-77581 SH 2	N40391.25	W45551.25	DETAIL 1 DRAWING H-2-77588 SH 3		
	32	4"SCHED 40	GROUT CAP INJECTION PORT	5	H-2-77581 SH 2	N40391.25	W45539.25	DETAIL 1 DRAWING H-2-77588 SH 3		
	33	4"SCHED 40	GROUT CAP INJECTION PORT	5	H-2-77581 SH 2	N40391.25	W45527.25	DETAIL 1 DRAWING H-2-77588 SH 3		
	34	4"SCHED 40	GROUT CAP INJECTION PORT	5	H-2-77581 SH 2	N40391.25	W45515.25	DETAIL 1 DRAWING H-2-77588 SH 3		
	35	4"SCHED 40	GROUT CAP INJECTION PORT	5	H-2-77581 SH 2	N40391.25	W45503.25	DETAIL 1 DRAWING H-2-77588 SH 3		
	36	4"SCHED 40	GROUT CAP INJECTION PORT	5	H-2-77581 SH 2	N40391.25	W45491.25	DETAIL 1 DRAWING H-2-77588 SH 3		
	37	4"SCHED 40	LEVEL ELEMENT LE 103-1	2	H-2-77619	N40418.75	W45583.25	DETAIL 3 DRAWING H-2-77588 SH 3		
	38	4"SCHED 40	LEVEL ELEMENT LE 103-3	2	H-2-77619	N40418.75	W45535.25	DETAIL 3 DRAWING H-2-77588 SH 3		
	39	4"SCHED 40	LEVEL ELEMENT LE 103-2	2	H-2-77619	N40393.75	W45559.25	DETAIL 3 DRAWING H-2-77588 SH 3		
	40	4"SCHED 40	LEVEL ELEMENT LE 103-4	2	H-2-77619	N40393.75	W45511.25	DETAIL 3 DRAWING H-2-77588 SH 3		
	41	2"SCHED 40	VAULT PRESS XMTR PT 01 & PT 02	1	H 2-77619	N40418.75	W45511.25	DETAIL 2 DRAWING H-2-77588 SH 3		
	42	1½"SCHED 40	TE-T-103-1	3	H-2-77619	N40406.25	W45583.25	NO ACTION REQUIRED		
	43	1½"SCHED 40	TE-T-103-2	3	H-2-77619	N40406.25	W45559.25	NO ACTION REQUIRED		
	44	1½"SCHED 40	TE-T-103-3	3	H-2-77619	N40406.25	W45535.25	NO ACTION REQUIRED		
	45	1½"SCHED 40	TE-T-103-4	3	H-2-77619	N40406.25	W45511.25	NO ACTION REQUIRED		
B-714-004	46	10"SCHED 40	EXHAUSTER	8	H-2-77581 SH 2	N40406.25	W45607.25	DETAIL 4 DRAWING H-2-77588 SH 3 SIM		
HOLD	47	TS 14X10X5/16	CLOSED CIRCUIT CCTV XE-01	4	H-2-77619	N40419.33	W45567.25	DETAIL 4 DRAWING H-2-77588 SH 3		
NOT DESIGN VERIFIED	48	TS 14X10X5/16	CLOSED CIRCUIT CCTV XE-02	4	H-2-77619	N40393.75	W45527.25	DETAIL 4 DRAWING H-2-77588 SH 3		
	49	4"SCHED 40	GROUTED WASTE DISCHARGE	4	H-2-77601	N40406.25	W45547.25	FILL WITH GROUT		
	50	3"SCHED 40	PIT DRAIN	A	H-2-77608	N40406.25	W45543.75	REMOVE DRAIN SEAL & HANDLE		
	51	26" STD WT	PUMP 103-A	A	H-2-77605	N40406.25	W45475.25	REMOVE PUMP (H-2-77616) & REPLACE W/PUMP (H-2-77614)		
	52	3"SCHED 40	LEACHATE PIT DRAIN	A	H-2-77608	N40404.67	W45472.87	NO ACTION REQUIRED		
	53	28"SCHED 40	MANWAY ACCESS	C	H-2-77581 SH 2	N40423.50	W45599.25	NO ACTION REQUIRED		
	54	28"SCHED 40	MANWAY ACCESS	C	H-2-77581 SH 2	N40423.50	W45495.25	NO ACTION REQUIRED		

PITS

PIT NO	REF DWG NO	NORTH	WEST	CLOSURE ACTION	COMMENTS	COMP. DATE
218-E-16-103-C	H-2-77601	N40412.75	W45550.75	SECTION B DWG H-2-77588 SH 3		
218-E-16-103-D	H-2-77602	N40432.50	W45484.50	SECTION C DWG H-2-77588 SH 3		
218-E-16-103-E	H-2-77602	N40386.00	W45484.50	SECTION C DWG H-2-77588 SH 3		
218-E-16-103-F	H-2-77602	N40386.00	W45610.00	SECTION C DWG H-2-77588 SH 3		
218-E-16-103-G	H-2-77602	N40432.50	W45610.00	SECTION C DWG H-2-77588 SH 3		
218-E-16-103-A	H-2-77612	N40410.25	W45467.00	H-2-77592		

PIPING

PIPE NO	REF DWG NO	CLOSURE ACTION	COMMENTS	COMP. DATE
2"EW-103D	H-2-77596	FILL PIPE WITH GROUT		
4"EW-103D ENCASEMENT	H-2-77596	FILL ANNULUS WITH GROUT		
2"EW-103E	H-2-77596	FILL PIPE WITH GROUT		
4"EW-103E ENCASEMENT	H-2-77596	FILL ANNULUS WITH GROUT		
2"EW-103F	H-2-77596	FILL PIPE WITH GROUT		
4"EW-103F ENCASEMENT	H-2-77596	FILL ANNULUS WITH GROUT		
2"EW-103G	H-2-77596	FILL PIPE WITH GROUT		
4"EW-103G ENCASEMENT	H-2-77596	FILL ANNULUS WITH GROUT		
2"GR-103	H-2-77596	DET 8 H-2-77611 SH 2		
4"GR-103 ENCASEMENT	H-2-77596	DET 8 H-2-77611 SH 2		
2"EW-103	H-2-77596	DET 8 H-2-77611 SH 2		
4"EW-103 ENCASEMENT	H-2-77596	DET 8 H-2-77611 SH 2		

ELECTRICAL

ITEM	REF DWG NO	CLOSURE ACTION	COMMENTS	COMP. DATE
MH-103A	H-2-77638 SH 3 DET 1	REMOVE 225 KVA XFMR CAP CONDUITS P 52 & P 53 RAISE MH COVER H-2-77592		
LEACHATE CONTROL STATION 103	H-2-77639 SH 2	RAISE LEACHATE CONTROL STATION		

OFFICIAL RELEASE BY WHC
DATE APR 04 1989

EDT# 101089

IMPACT LEVEL 2

WHC APPROVAL 12/29/87	DATE 12-28-1988	U.S. DEPARTMENT OF ENERGY RICHLAND OPERATIONS OFFICE
BY		KAISER ENGINEERS HANFORD COMPANY
DWN BY H HENRICKSON	12-28-1988 / 9-30-1988	M CIVIL VAULT ISOLATION VAULT 103 PENETRATIONS
APPROVED BY WJM HP RAY	9-30-1988	
SAFETY D PARTHREE	9-28-1988	
APPROVED BY WJM D LIEN	9-28-1988	PROJECT TITLE GROUT VAULT PAIR (218-E-16-102 & 103)
CHECKED BY WJ MAGRUDER	9-15-1988	PROJ B-714 WO ER9090 JOB —
DRAWN BY RC CROSKREY	1-5-1988	SCALE SHOWN BLDG 218-E-16 INDEX 0901
DESIGNED BY RC CROSKREY	1-5-1988	DRAWING NUMBER H-2-77588 SHEET 5 OF 5 REV 0

MICROFILMED	BY-DATE	BY-DATE	REV BY DATE	DESCRIPTION	REV
	APPROVAL	KEH APPROVAL			
				REVISIONS	
	COMMENT REVIEW				

NUMBER	TITLE
DRAWING TRACEABILITY LIST	

NUMBER	TITLE
H-2-77573	DRAWING LIST
REFERENCES	
NEXT USED ON H-2-77588 SH 3	

H23569845
C 12/29/88

9011706

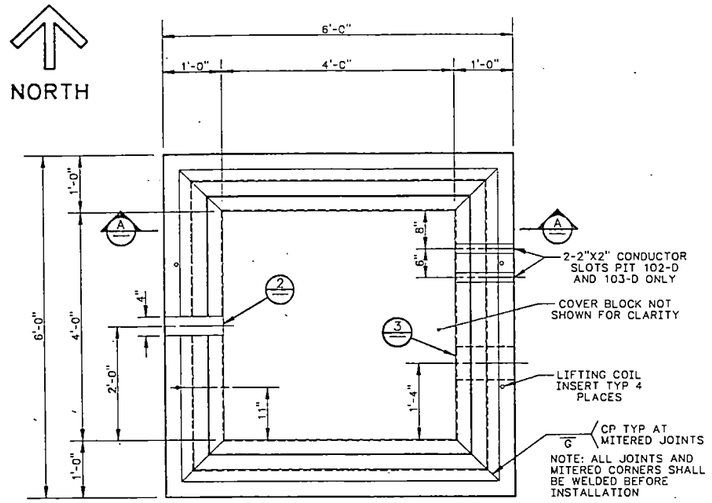

PLAN

SCALE 1"=1'-0"

(SHOWN WITH COVER BLOCK REMOVED)

PIT 102-G SHOWN, SEE DWG H-2-77602 SH 1 FOR OREINTATION OF PITS 102-D, E & F

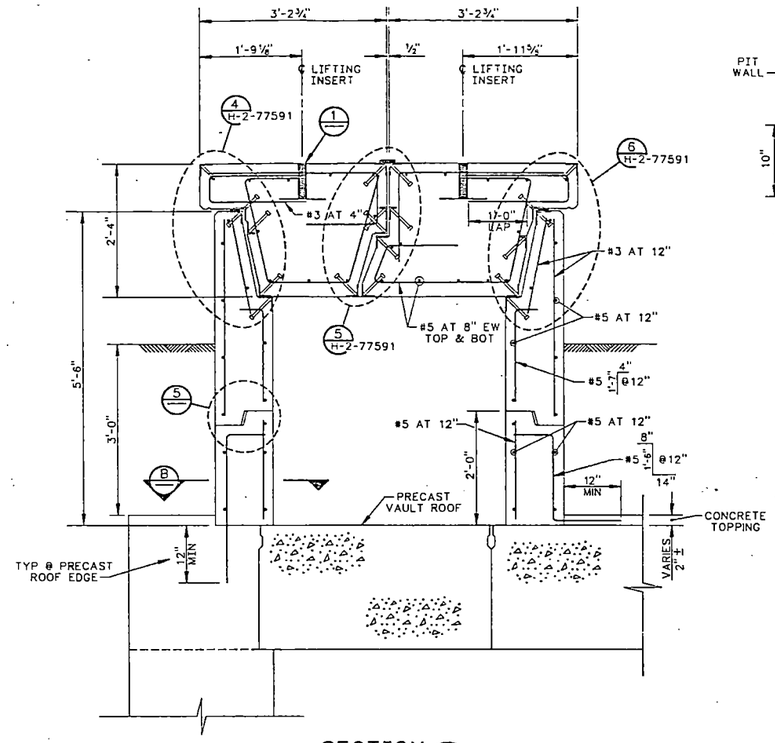

SECTION A

SCALE 1"=1'-0"

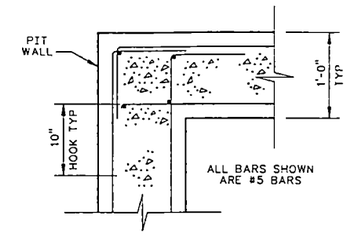

SECTION B

SCALE 1½"=1'-0"

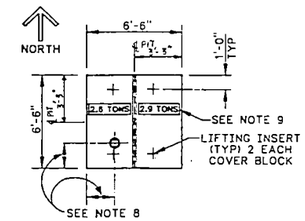

PLAN OF COVER BLOCKS

SCALE ¼"=1'-0"

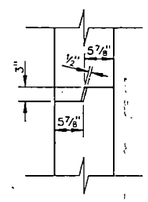

DETAIL 5

SCALE 1"=1'-0"

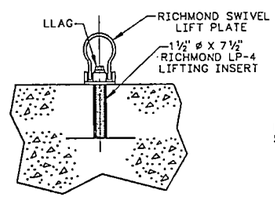

DETAIL 1

SCALE 1½"=1'-0"

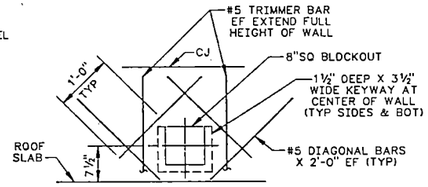

REINFORCING TYPICAL FOR EACH BLOCKOUT

DETAIL 3

SCALE 1"=1'-0"

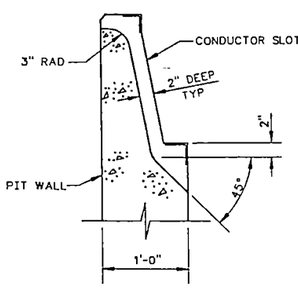

DETAIL 2

SCALE 1½"=1'-0"

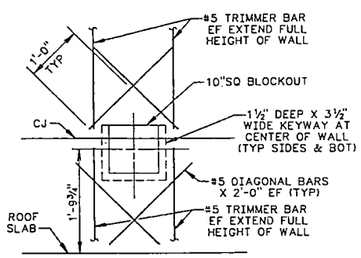

DETAIL 4

SCALE 1"=1'-0"

ADDITIONAL BLOCKOUT FOR PIT 102-D ONLY

SEE DWG. H-2-77602 SHT. 1 FOR LOCATION

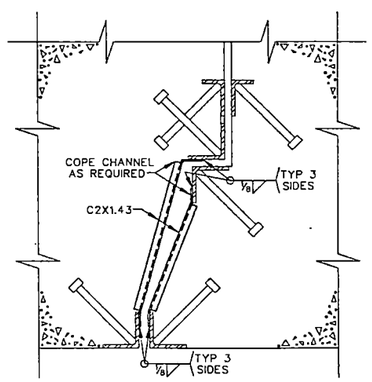

EMBED SKID PLATES @ THIRD POINTS ON INCLINED SURFACE OF EA COVER BLOCK (8 REQD PER BLOCK)

SKID PLATE DET 7

H-2-77584

SCALE 3"=1'-0"

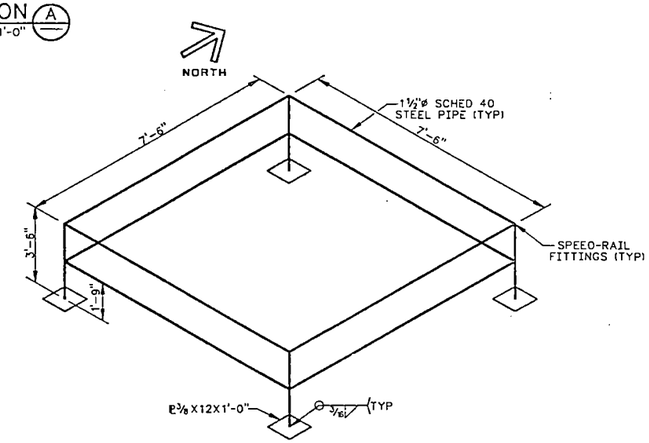

GUARDRAIL DETAIL

SCALE: NONE

SEE NOTE 7

EXCESS WATER PIT NOTES

1- FOR CONSTRUCTION SPECIFICATIONS, SEE B-714-C2, FOR CONCRETE USE SECTION 03300 CAST-IN-PLACE CONCRETE.
2- DESIGN LOAD:
COVER BLOCK 100 PSF (LIVE LOAD)
3- DESIGN STRESSES:
CONCRETE f_c = 4000 PSI AT 28 DAYS
REINF STEEL f_y = 60000 PSI
4- APPLY SPECIAL PROTECTIVE COATING TO THE FLOOR, INTERIOR WALLS, TOPS OF WALLS AND UPPER ONE FOOT ON EXTERIOR WALLS AND ALL SURFACES OF COVER BLOCK. (SEE SPEC SECTION 09805)
5- TOLERANCES SHALL CONFORM TO ACI 117-81 EXCEPT AS NOTED BELOW.
A- INTERIOR WALL SURFACES ±¼"
B- COVER BLOCKS AND WALL RECESSES ±⅛"
C- SLEEVE LOCATION ±¼"
6- PROVIDE ¼" WIDE X ¼" DEEP GROOVE AT EDGES OF ALL EMBEDDED ANGLES. FILL GROOVES WITH A GREY POLYSULFIDE SEALANT.
7- TEMPORARY GUARDRAIL SHALL BE PROVIDED AROUND EXCESS WATER PIT WHEN COVER BLOCKS ARE REMOVED.
8- FOR PIT BLOCKOUT & COVER PENETRATION LOCATIONS SEE DWGS H-2-77602 SH 1 & SH 2.
9- PAINT COVER BLOCK WEIGHTS WITH 2 INCH HIGH BLACK LETTERS ON YELLOW BACKGROUND. SEE DWG H-2-77610 FOR PAINTING REQUIREMENTS.

OFFICIAL RELEASE BY WHC DATE APR 04 1989

EDT # 101089

IMPACT LEVEL 2

DRAWING TRACEABILITY LIST			
NUMBER	TITLE	NUMBER	TITLE
		H-2-77573	DRAWING LIST
		NEXT USED	REFERENCES H-2-77591 SH 1

REV	DESCRIPTION	REV BY DATE	BY-DATE	BY-DATE
	REVISIONS		APPROVAL	KEH APPROVAL
	COMMENT REVIEW			

MICROFILMED

WHC APPROVED 1/20/89 BY SK BRIGGS — DATE 12-28-1988

U.S. DEPARTMENT OF ENERGY
RICHLAND OPERATIONS OFFICE
KAISER ENGINEERS HANFORD COMPANY

PROJ ENGR JD CLOUD 12-28-1988
DESIGNED BY CP McCALLUM 9-13-1988
APPROVED BY WJM EA DUKLETH 9-13-1988
SAFETY RC HOLLENBECK 9-13-1988 AC MINISTER 9-13-1988
APPROVED BY WJM D LIEN 9-6-1988
ENGINEER BY CM CONSELMAN 8-12-1988
DRAWN BY RC CROSKREY 5-10-1988
DESIGNED BY RC CROSKREY 5-10-1988

M CIVIL
EXCESS WATER PIT PLAN SECTIONS & DETAILS

PROJECT TITLE
GROUT VAULT PAIR (218-E-16-102 & 103)

PROJ B-714 WO ER9090 JOB
SCALE SHOWN BLDG 218-E-16 INDEX 0900,0901
DRAWING NUMBER H-2-77590 SHEET 1 OF 1 REV 0

H-2-77590A1 C 12/29/88

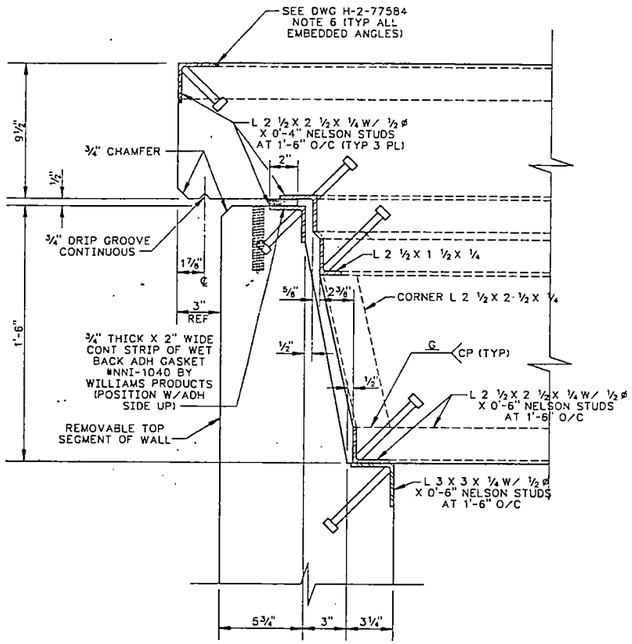

DETAIL 4
SCALE 3"=1'-0" H-2-77590

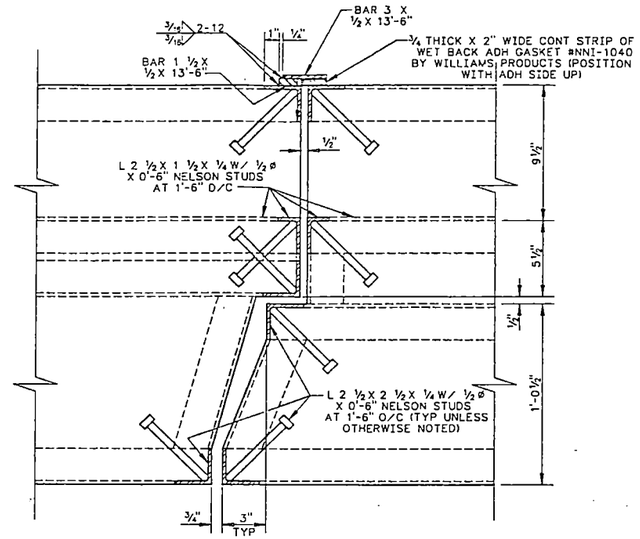

DETAIL 5
SCALE 3"=1'-0" H-2-77590

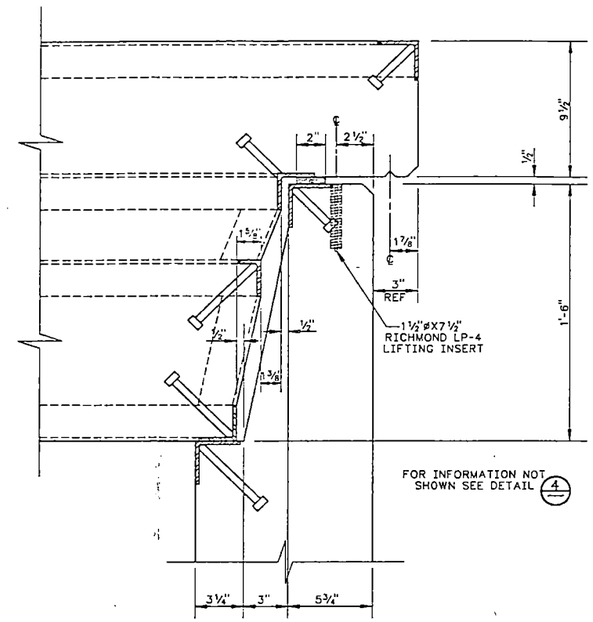

DETAIL 6
SCALE 3"=1'-0" H-2-77590

OFFICIAL RELEASE BY WHC
DATE APR 04 1989

EDT # 101089

IMPACT LEVEL 3

WHC APPROVAL BY ER STOCKS	DATE 12-28-88	U.S. DEPARTMENT OF ENERGY RICHLAND OPERATIONS OFFICE
PROJ CONT ENGR LV CLOUD	12-28-88	KAISER ENGINEERS HANFORD COMPANY
DFTG WJM BENNINGSON CP McCALLUM	9-13-88	CIVIL
APPROVED BY WJM EA DUKLETH	9-13-88	EXCESS WATER PIT COVER BLOCKS
SAFETY RG HOLLENBECK AG WINSTER	12-27-88	PROJECT TITLE
APPROVED CONT ENGR BY WJM D LIEN	9-6-88	GROUT VAULT PAIR (218-E-16-102 & 103)
CHECKED BY CM CONSELMAN	8-12-88	PROJ B-714 ID ER9090 JOB —
DRAWN BY RC CROSKREY	5-10-88	SCALE SHOWN BLDG 218-E-16 INDEX 0110
DESIGNED BY RC CROSKREY	5-10-88	DRAWING NUMBER H-2-77591 SHEET 1 OF 1 REV 0

NUMBER	TITLE
DRAWING TRACEABILITY LIST	

NUMBER	TITLE
H-2-77573	DRAWING LIST
REFERENCES	
NEXT USED ON	

REV	DESCRIPTION	REV BY DATE	BY-DATE	BY-DATE
APPROVAL	REVISIONS		KEH APPROVAL	
COMMENT REVIEW				

MICROFILMED

H277591A1 C 12/29/88

9 1 2 0 3 1 7 7 1 0 6

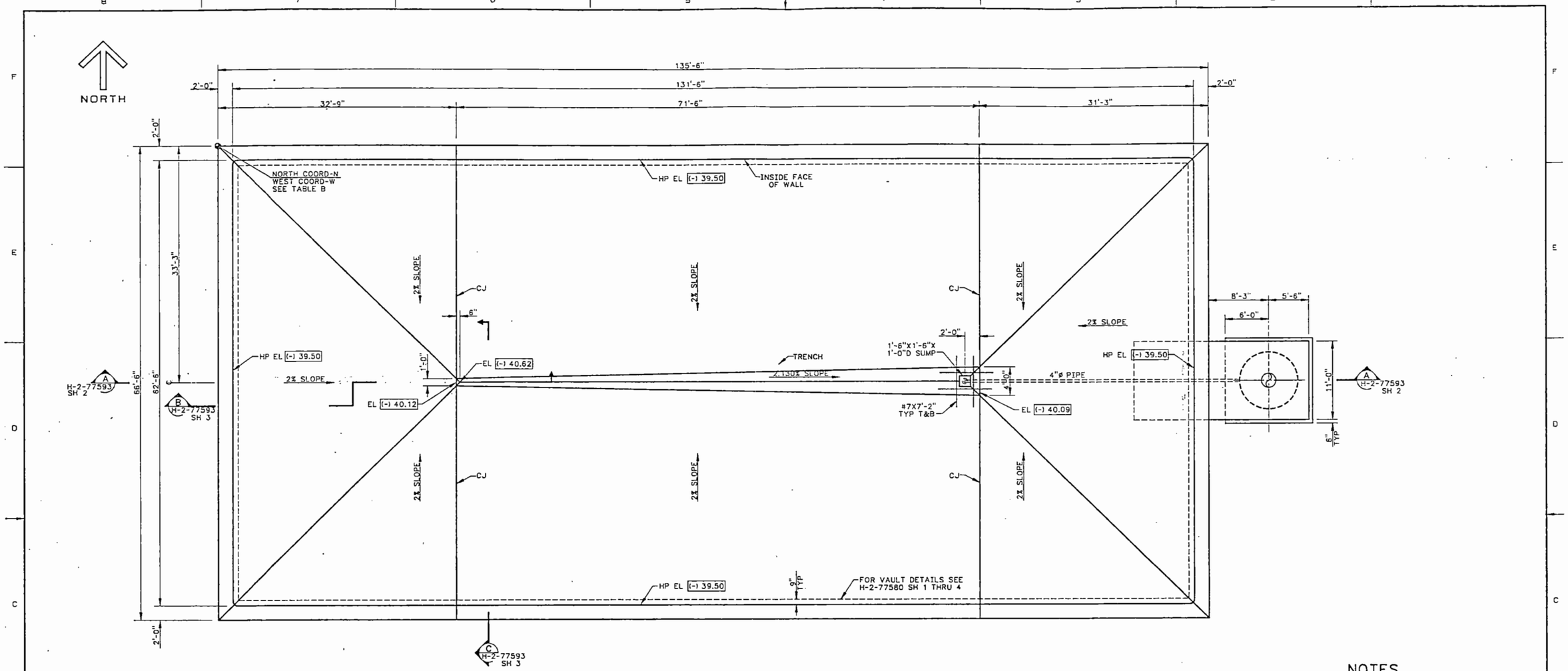

PLAN

SCALE 3/16"=1'-0"

NOTE: FOR VAULT NUMBERS SEE DWG H-2-77574 SH 1

TABLE B		
VAULT NO	NORTH COORD	WEST COORD
102	N40526.00	W45615.00
103	N40439.50	W45615.00

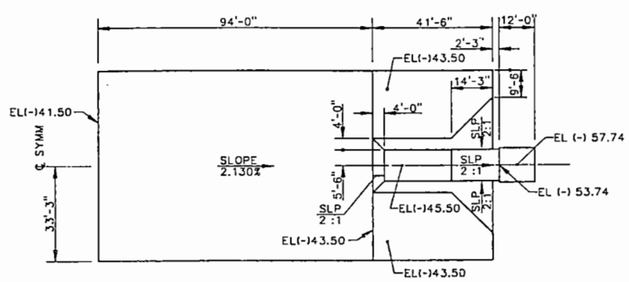

PLAN - BOT OF FND

SCALE 1"=20'

NOTES

1- FOR GENERAL NOTES SEE H-2-77580 SH 2

2- W.P. ELEVATIONS ARE: (-)X.XX

3- PLACE 6 MIL BLACK POLYETHYLENE SHEETING ON DIFFUSION BARRIER GRAVEL PRIOR TO CONCRETE PLACEMENT.

NOT DESIGN VERIFIED

HOLD- ENTIRE DRAWING FOR VERIFICATION OF THERMAL PROPERTIES USED IN THERMAL STRESS ANALYSIS
B-714-002

OFFICIAL RELEASE BY WHC
DATE APR 14 1989

EDT # 102073

IMPACT LEVEL 2

DRAWING TRACEABILITY LIST			
NUMBER	TITLE	REFERENCES	
		H-2-77573	DRAWING LIST
		NUMBER	TITLE
		NEXT USED ON H-2-77593 SH2	

REVISIONS				
BY-DATE	BY-DATE	REV BY DATE	DESCRIPTION	REV
APPROVAL	KEH APPROVAL			
COMMENT REVIEW				

MICROFILMED

WHC APPROVAL 11/22/89 BY JR Bugg — DATE 12-28-1988

U.S. DEPARTMENT OF ENERGY
RICHLAND OPERATIONS OFFICE
KAISER ENGINEERS HANFORD COMPANY

PROJ ENGR Oskaloud — 12-28-1988
RESPONSIBLE ENGR RJ KIDDER — 12-7-1988
APPROVED BY WJM RGH — 10-7-1988
SAFETY D PARTHREE — 12-7-1988
APPROVED BY WJM EA GOAKEY — 12-7-1988
CHECKED BY JV EGGER — 12-28-1988
DRAWN BY RC CROSKREY — 1-6-1989
DESIGNED BY EA GOAKEY — 1-6-1989

CIVIL CONCRETE BASIN PLAN

PROJECT TITLE: GROUT VAULT PAIR (218-E-16-102 & 103)

PROJ	WO	JOB
B-714	ER9090	—

SCALE	BLDG	INDEX
SHOWN	218-E-16	0900,0901

DRAWING NUMBER	SHEET	OF	REV
H-2-77593	1	3	0

H277593A1
C 12/28/88

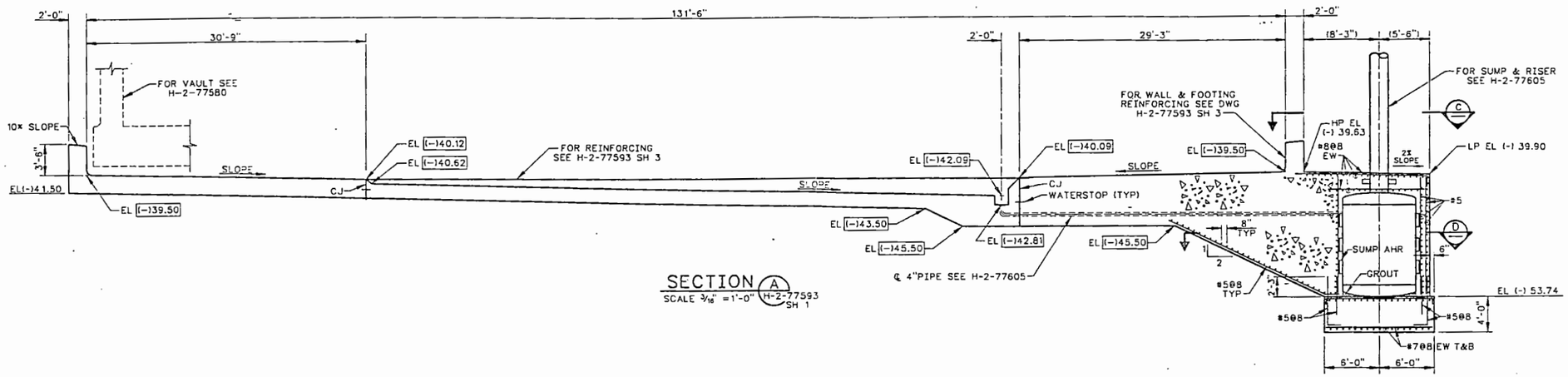

SECTION (A)
SCALE 3/16" = 1'-0" (H-2-77593 SH 1)

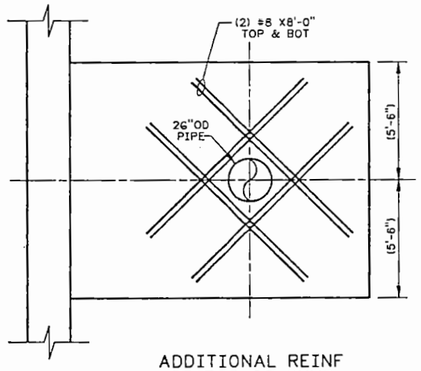

ADDITIONAL REINF AT TOP OF SUMP

PLAN (C)
SCALE 3/8" = 1'-0"

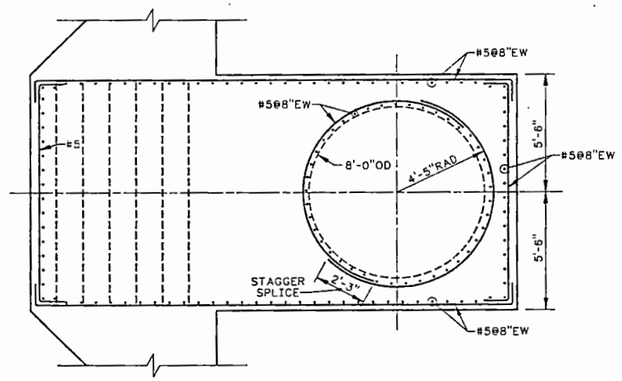

SECTION (D)
SCALE 3/8" = 1'-0"

FOR GENERAL NOTE SEE H-2-77580 SH 2

NOT DESIGN VERIFIED

HOLD- ENTIRE DRAWING FOR VERIFICATION OF THERMAL PROPERTIES USED IN THERMAL STRESS ANALYSIS
B-714-002

OFFICIAL RELEASE BY WHC
DATE APR 14 1989

EDT-102073

IMPACT LEVEL 2

WHC APPROVAL 12/29/87 BY ARBBS	DATE 12-29-1988	U.S. DEPARTMENT OF ENERGY RICHLAND OPERATIONS OFFICE
		KAISER ENGINEERS HANFORD COMPANY
PROJECT ENGINEER	12-29-1988	CIVIL CONCRETE BASIN SECTION & DETAILS
APPROVED BY RJ KIDDER	10-7-1988	
APPROVED BY WJM RGH	10-7-1988	
SAFETY D PARTHREE	10-7-1988	PROJECT TITLE
APPROVED BY WJM EA GOAKEY	10-7-1988	GROUT VAULT PAIR (218-E-15-102 & 103)
CHECKED BY JV EGGER	9-29-1988	PROJ B-714 / WO ER9090 / JOB
		SCALE SHOWN / BLDG 218-E-15 / INDEX 0901
DRAWN BY RC CROSKREY	1-6-1988	DRAWING NUMBER H-2-77593 / SHEET 2 / OF 3 / REV 0
DESIGNED BY EA GOAKEY	1-6-1988	

BY-DATE	BY-DATE	REV BY DATE	DESCRIPTION	REV
APPROVAL	KEH APPROVAL		REVISIONS	
COMMENT REVIEW				

MICROFILMED

NUMBER	TITLE
H-2-77573	DRAWING LIST

DRAWING TRACEABILITY LIST — REFERENCES — NEXT USED ON H-2-77593 SH 3

H277593A2
C 12/29/88

9011776

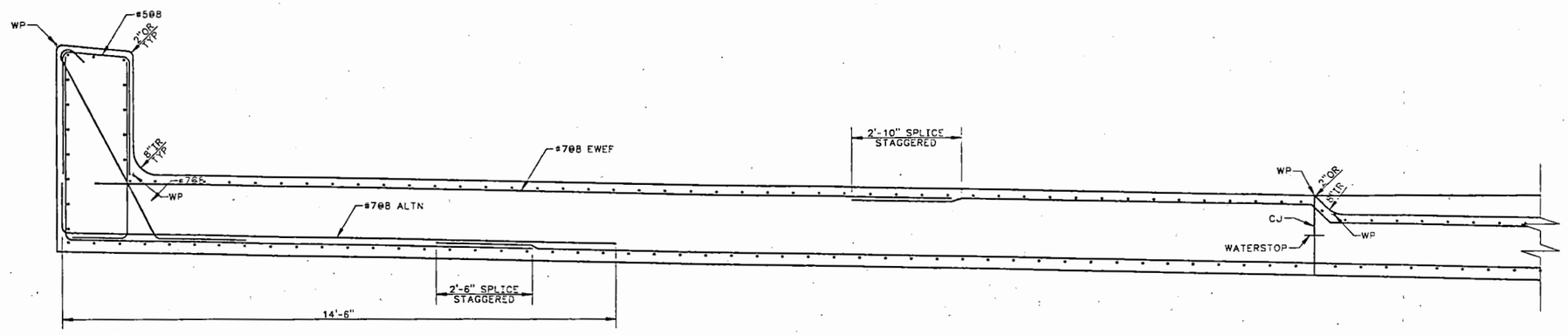

SECTION B
SCALE 3/4"=1'-0" H-2-77593 SH 1

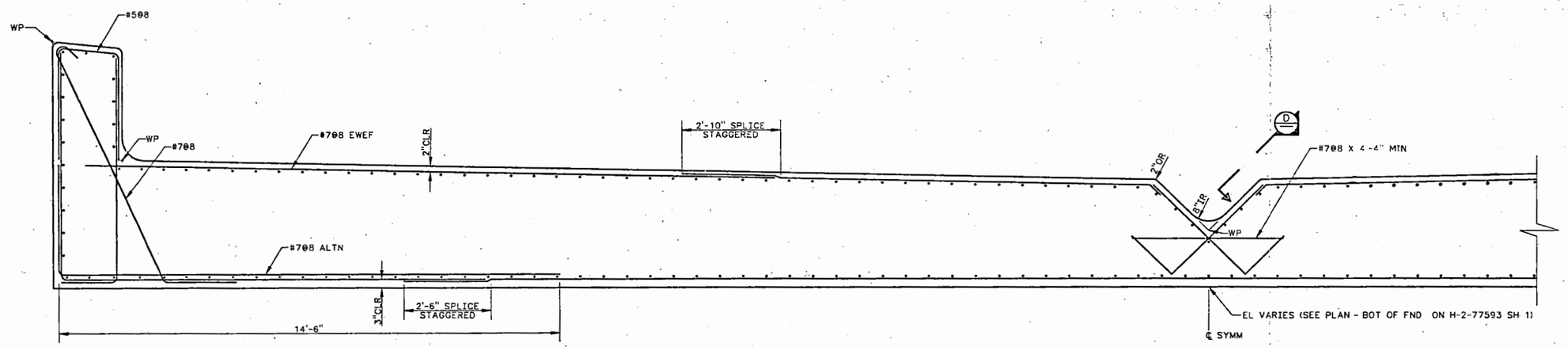

SECTION C
SCALE 3/4"=1'-0" H-2-77593 SH 1

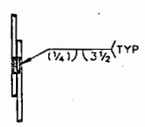

VIEW D
SCALE: FULL

NOT DESIGN VERIFIED

HOLD- ENTIRE DRAWING FOR VERIFICATION OF THERMAL PROPERTIES USED IN THERMAL STRESS ANALYSIS
B-714-002

OFFICIAL RELEASE BY WHC
DATE APR 14 1989

EDT # 102073

IMPACT LEVEL Z

WHC APPROVED 1/20/87 BY JR 8/30/88	DATE 12-28 1988	U.S. DEPARTMENT OF ENERGY RICHLAND OPERATIONS OFFICE
		KAISER ENGINEERS HANFORD COMPANY
PROJ ENGR RJ KIDDER	12-28 1988	CIVIL CONCRETE BASIN SECTION & DETAILS
DSR/INTERFACE RJ KIDDER	10-7 1988	
APPROVED BY WJM RGH	10-7 1988	
SAFETY D PARTHREE	10-7 1988	
APPROVED BY WJM EA GOAKEY	10-7 1988	PROJECT TITLE GROUT VAULT PAIR (218-E-16-102 & 103)
CHECKED BY JV EGGER	9-28 1988	PROJ B-714 / WO ER9090 / JOB —
DRAWN BY RC CROSKREY	1-6 1988	SCALE SHOWN / BLDG 218-E-16 / INDEX 0901
DESIGNED BY EA GOAKEY	1-6 1988	DRAWING NUMBER H-2-77593 / SHEET 3 / OF 3 / REV 0

NUMBER	TITLE
DRAWING TRACEABILITY LIST	

NUMBER	TITLE
H-2-77573	DRAWING LIST
REFERENCES	
NEXT USED ON	

MICROFILMED	BY-DATE	BY-DATE	REV BY DATE	DESCRIPTION	REV
APPROVAL	KEH APPROVAL				
REVISIONS					
COMMENT REVIEW					

H27_03A1
C 12/30/88

6130977 1106

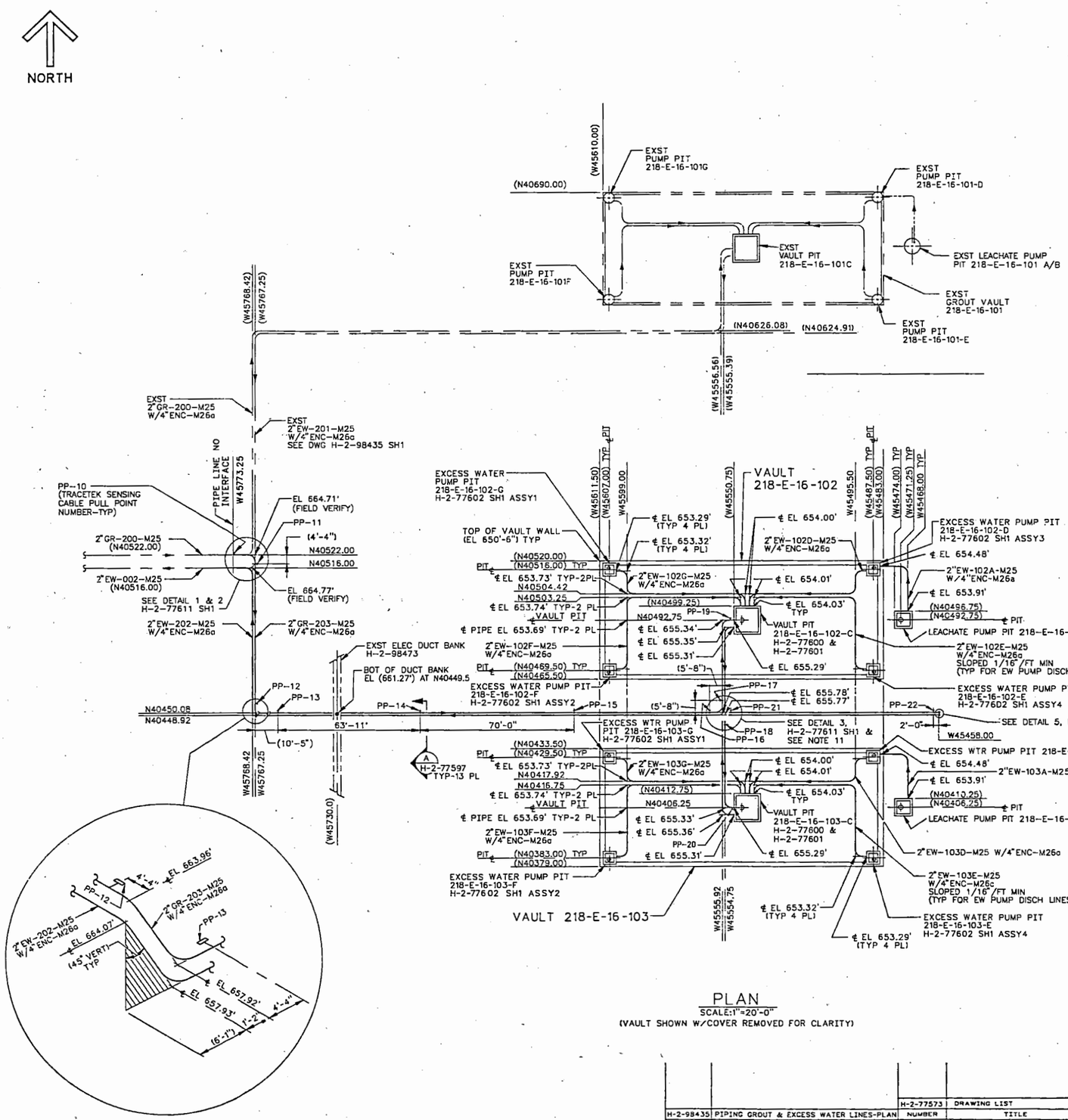

PLAN

SCALE:1"=20'-0"

(VAULT SHOWN W/COVER REMOVED FOR CLARITY)

GENERAL NOTES:

1. FOR LEGEND & SYMBOLS SEE H-2-77618.
2. UNLESS OTHERWISE SHOWN ALL BENDS SHALL BE 3'-0" RADIUS BENDS.
3. FOR PIPE SUPPORTS, GUIDES AND ANCHORS SEE H-2-77598 FOR LOCATIONS.
4. DIFFUSION BARRIER TO BE INSTALLED PRIOR TO INSTALLATION OF PIPE ON TOP OF VAULT. TRENCHING OR SHORING WILL BE REQUIRED FOR INSTALLATION OF ALL PIPING ON TOP OF VAULT.
5. ALL PIPING MATERIAL FABRICATION AND TESTING SHALL BE IN ACCORDANCE WITH CONSTRUCTION SPECIFICATION B-714-C2.
6. PAINT ALL PIT COVERS PER H-2-77610.
7. LINES SHALL HAVE A 2'-7" MINIMUM EARTH COVER AS MEASURED FROM TOP OF ENCASEMENT OR INSULATION.
8. TOLERANCES: UNLESS OTHERWISE NOTED.
   FRACTIONAL ± 1/8"
   ± 1/4" ON PIPE LINE ELEVATIONS *
   ± 1" ON PIPE LINE SPACING
   ± 2" ON PIPE LINE LOCATIONS
   ANGULAR ± 1° DECIMAL ± .010
   * INTERMEDIATE ELEVATIONS SHALL BE AS REQUIRED TO ESTABLISH AND MAINTAIN MINIMUM PIPE LINE SLOPE OF 3/32" PER FOOT.
9. CORNER ELEVATIONS TO BE DETERMINED BY INTERPOLATION FROM ELEVATIONS AT THE FIRST ADJACENT SUPPORT IN EACH DIRECTION.
10. FOR CATHODIC PROTECTION REQUIREMENTS SEE H-2-77645.
11. SEE DETAILS 4,6,7 & 8 ON DWG H-2-77611 SH1 & 2 FOR FUTURE PIPE ROUTE CHANGES. (NOTE: THE FUTURE PIPING ROUTE CHANGES ARE NOT WITHIN THE PROJECT B-714 SCOPE OF WORK).

OFFICIAL RELEASE BY WHC
DATE APR 04 1989

EDT # 101089

IMPACT LEVEL 2

DRAWING TRACEABILITY LIST			
NUMBER	TITLE	NEXT USED ON	
H-2-98435	PIPING GROUT & EXCESS WATER LINES-PLAN	H-2-77573	DRAWING LIST
		NUMBER	TITLE
			REFERENCES

REVISIONS				
BY-DATE	BY-DATE	REV BY DATE	DESCRIPTION	REV
APPROVAL	KEH APPROVAL			
COMMENT REVIEW				

MICROFILMED

WHC — U.S. DEPARTMENT OF ENERGY, RICHLAND OPERATIONS OFFICE
KAISER ENGINEERS HANFORD COMPANY

PIPING PLAN

PROJECT TITLE: GROUT VAULT PAIR 218-E-16-102&103

PROJ	B-714	WO	ER1060
JOB	242500	SCALE	SHOWN
BLDG	218-E-16	SHEET	0433
DRAWING NUMBER	H-2-77596	SHEET 1	OF 2

CAD FILE B977596-A
CAD CODE
~~KEHCAD~~

9 0 1 1 7 1 0 6 0 3 2 0

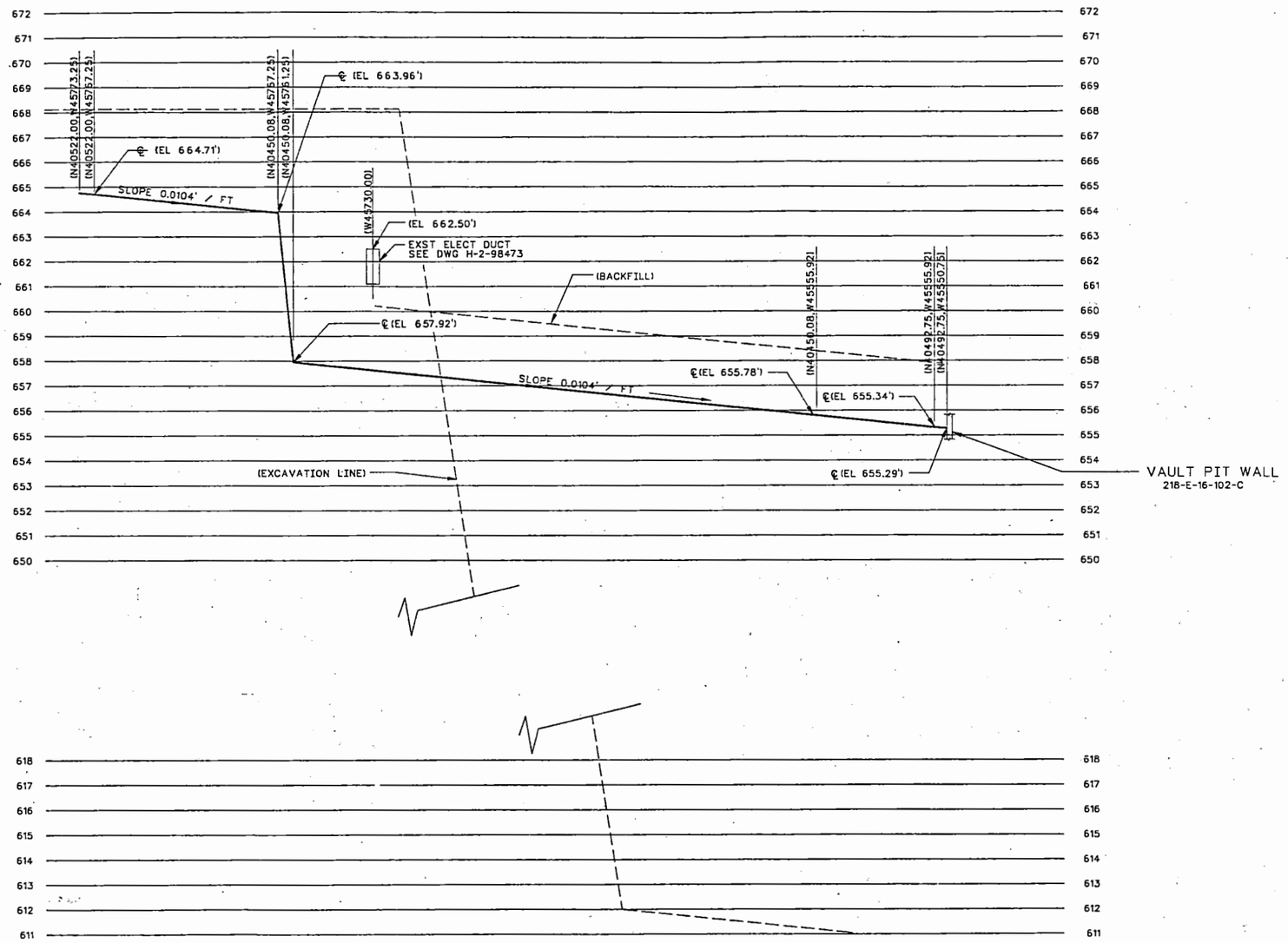

PROFILE GROUT LINE (GR-203-M25 W/4"ENC-M26a)

SCALE: HORIZ 1"=20'
VERT 1/2"=1'-0"

NOTES:

1. FOR GENERAL NOTES SEE H-2-77596 SH 1.

OFFICIAL RELEASE BY WHC
DATE APR 04 1989

EDT # 101089

IMPACT LEVEL 2

NUMBER	TITLE	NUMBER	TITLE
	DRAWING TRACEABILITY LIST	H-2-77573	DRAWING LIST
		NEXT USED ON	REFERENCES

REV	DESCRIPTION	REV BY DATE	BY-DATE	BY-DATE
	REVISIONS		KEH APPROVAL	APPROVAL
	COMMENT REVIEW			

MICROFILMED

WHC APPROVAL BY J.R.D. DATE 4/4/89

U.S. DEPARTMENT OF ENERGY
RICHLAND OPERATIONS OFFICE
KAISER ENGINEERS HANFORD COMPANY

M PIPING PLAN
PROFILE GROUT LINE

PROJECT TITLE: GROUT VAULT PAIR 218-E-16-102 & 103

PROJ	B-714	WO ER1060	JOB 242500
SCALE SHOWN	BLDG 218-E-16		IMAGE 0402
DRAWING NUMBER H-2-77596	SHEET 2	OF 2	REV 0

		DATE
PROJ ENGR		15-88
LEAD	H. HENRIKSON	7-29 1988
APPROVED	WJM/RM ITEN	7-27 1988
SAFETY	JLH/AG MINISTER	7-21 1988
APPROVED	CRZ/JR COLLINS	7-21 1988
CHECKED	L. HALL	7-21 1988
DRAWN BY	D.MILTON	5-15 1988
DESIGNED BY	D.MILTON	5-15 1988
CAD FILE	B077596B	
CAD EXEC	28-DEC-ACD2:9.13:NN	

~~KEH LOAD~~

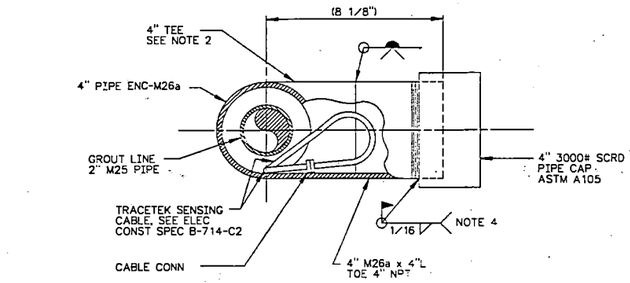

SECTION (A) H-2-77596, H-2-77611 SH1 & 2
SCALE: 3/8" = 1'

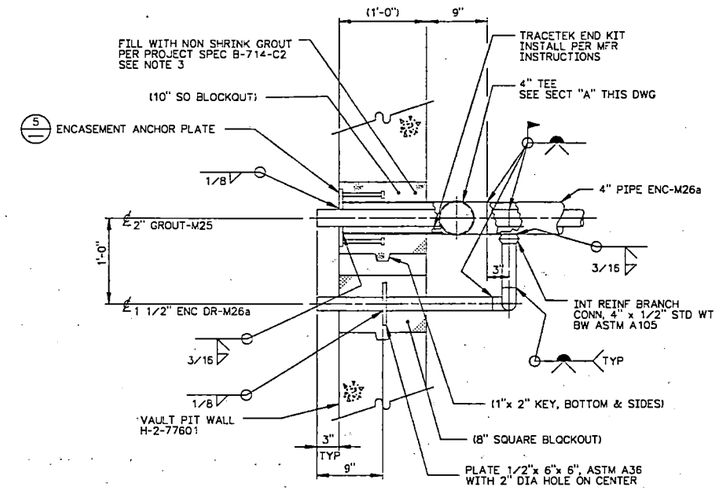

DETAIL (8) H-2-77601
SCALE:1 1/2"=1'-0"

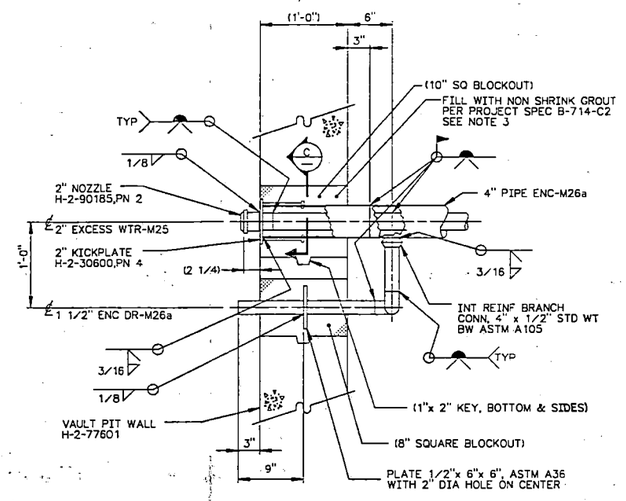

DETAIL (11) H-2-77601 & H-2-77612
SCALE:1 1/2"=1'-0"

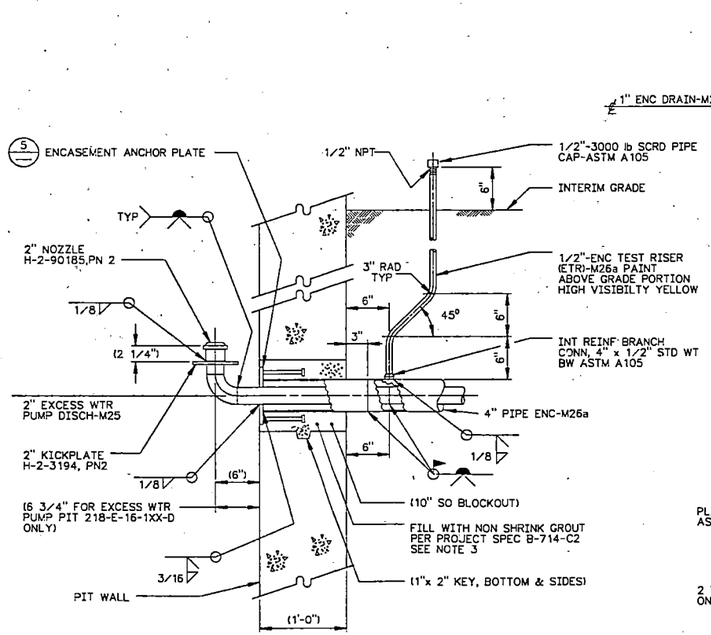

DETAIL (7) H-2-77601, H-2-77602 SH1 & 2
SCALE:1 1/2"=1'-0"

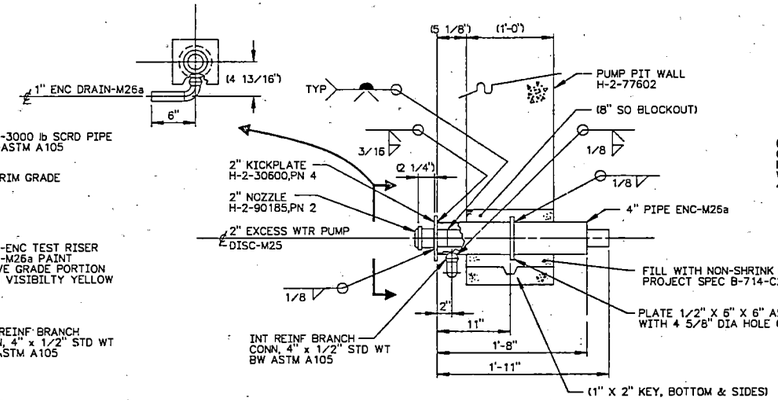

DETAIL (10) H-2-77602 SH1 & 2
SCALE:NONE

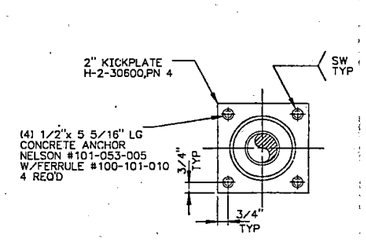

SECT C–C
SCALE:3"=1'-0"

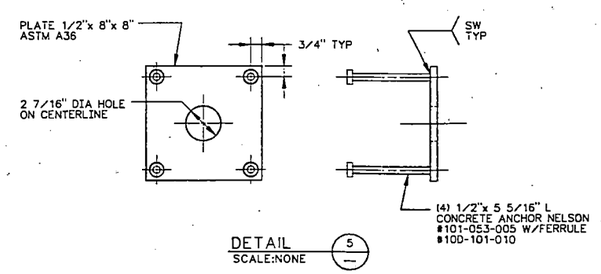

DETAIL (5) NONE
SCALE:NONE

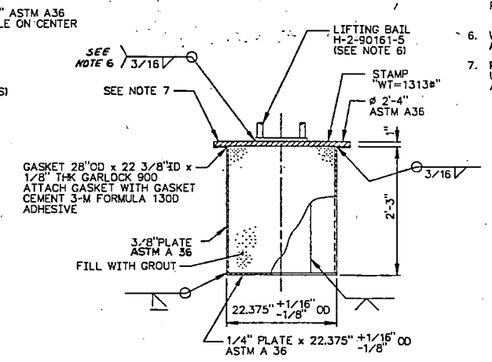

DETAIL (6) H-2-77602 SH 1
SCALE:1 1/2"=1'-0"

NOTES:

1. FOR GENERAL NOTES SEE H-2-77596.
2. SEE ELECTRICAL CONSTRUCTION SPECIFICATION B-714-C2 FOR TRACETEK CABLE REQUIREMENTS PRIOR TO INSTALLATION OF TEES.
3. NOZZLES TO BE GROUTED IN PLACE AFTER PIPING SLOPES HAVE BEEN ESTABLISHED AND BACKFILL ACCOMPLISHED.
4. AFTER COMPLETION OF SENSING CABLE INTER-CONNECTIONS STUFF BUNDLE INTO CONFINES OF 4" ENC. TIGHTEN PIPE CAP & GRIND EXPOSED THREADS FOR WELD PREP. PROTECT (WITH WET CLOTH ECT.) TEE OUTLET FROM TEMPERATURE EXCEEDING 200° F.
5. SUBSTITUTE APPROPRIATE VAULT NUMBER IN PLACE OF "XX".
6. WELD AND EXAMINE IN ACCORDANCE AWS D1.1 SECTION 8.
7. PAINT STENCILED MARKING USING 1/2" HIGH LETTERS BLACK ON YELLOW AS FOLLOWS:

   H-2-77597, REV 0 , DET 6

OFFICIAL RELEASE
BY WHC
DATE APR 04 1989

EDT# 101089

IMPACT LEVEL 2

WHC APPROVAL BY SR. BRIGGS	DATE 6-20-1988	U.S. DEPARTMENT OF ENERGY RICHLAND OPERATIONS OFFICE	
PROJ ENGR J D BLOUD	12-28-1988	KAISER ENGINEERS HANFORD COMPANY	
QA H. HENDRICKSON	7-29-88	PIPING MISCELLANEOUS DETAILS	
APPROVED BY W.M ROBERT M. ITEN	7-27-88		
SAFETY A.G. MINISTER	7-21-88	PROJECT TITLE GROUT VAULT PAIR 218-E-16-102&103	
APPROVED BY CRZ JR. COLLINS	7-19-88	PROJ B-714 / WO ER1060	JOB 24-2530
CHECKED BY L. HALL	7-19-88	SCALE SHOWN / BLDG 218-E-16	INST
DRAWN BY D.MILTON	1-6-1988	DRAWING NUMBER	SCALE
DESIGNED BY D.MILTON	1-6-1988	H-2-77597	

BY-DATE	BY-DATE	REV BY DATE	DESCRIPTION	REV
APPROVAL	KEH APPROVAL		REVISIONS	
COMMENT REVIEW				

MICROFILMED

NUMBER	TITLE	NUMBER	TITLE
DRAWING TRACEABILITY LIST		H-2-77573 DRAWING LIST REFERENCES	NEXT USED ON

9011776022

NORTH

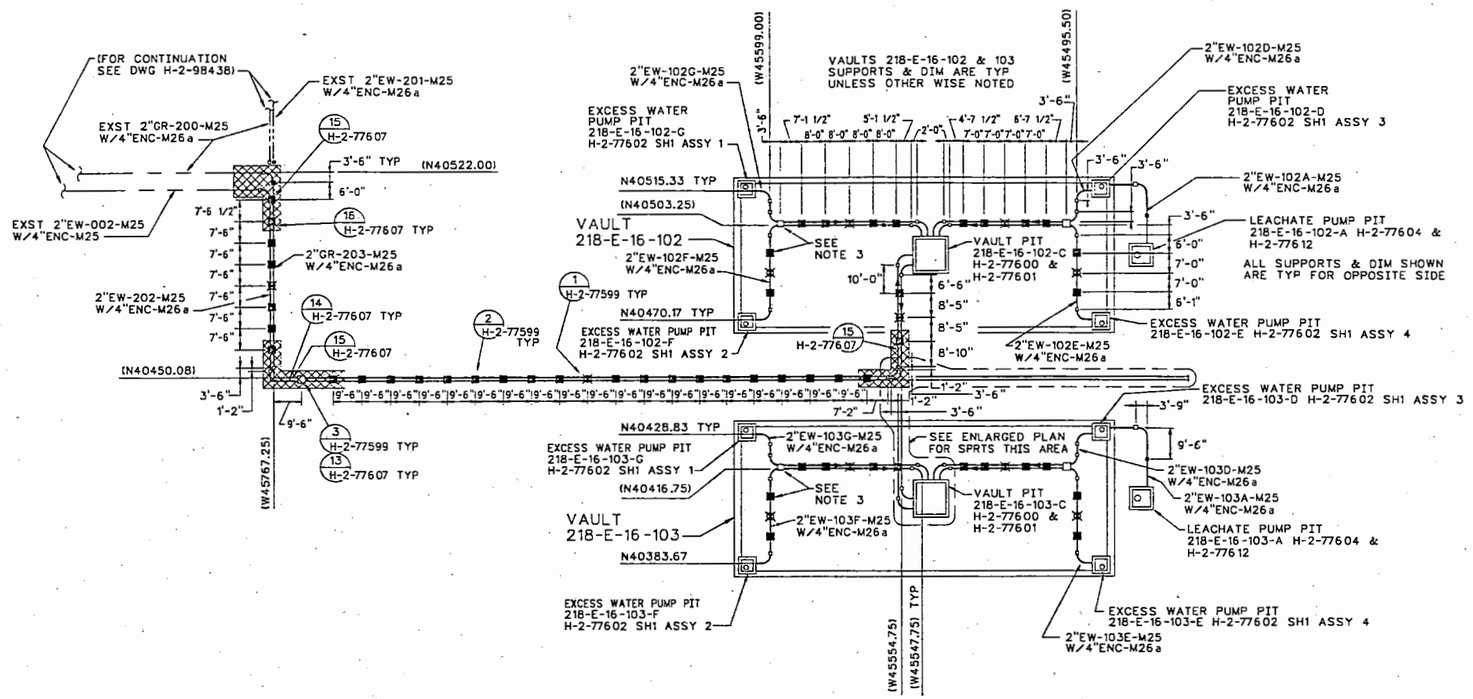

PLAN

SCALE:1"=20'-0"

(VAULT SHOWN W/COVER REMOVED FOR CLARITY)

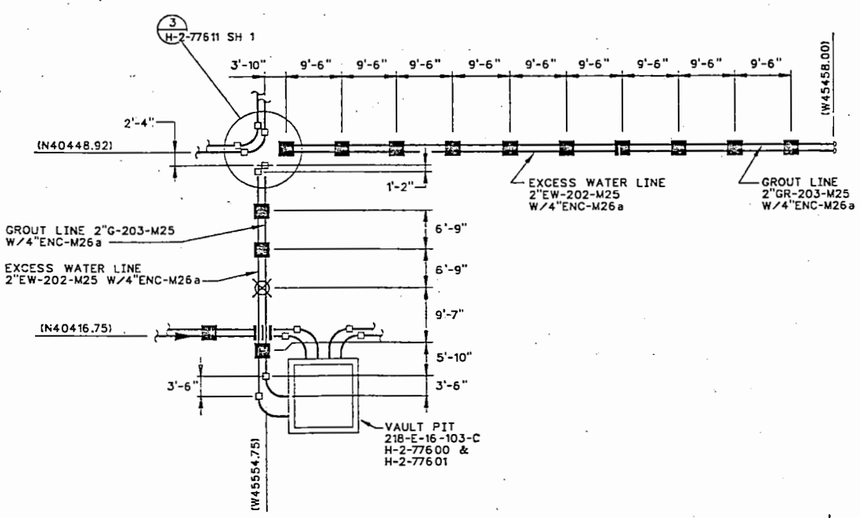

ENLARGED PLAN

SCALE:1"=10'-0"

(VAULT SHOWN W/COVER REMOVED FOR CLARITY)

LEGEND

- ENCASED PIPE ANCHOR (ON SOIL)
- ENCASED PIPE GUIDE
- ENCASED PIPE SUPPORT

NOTES:

1. FOR GENERAL NOTES SEE DWG H-2-77596.
2. FOR PIPING LOCATION AND ELEVATIONS SEE DWG H-2-77596.
3. GROUT IN PLACE ALL PIPE SUPPORTS SHOWN ON THE VAULT ROOF PER DETAIL 6 ON DWG H-2-77599.

OFFICIAL RELEASE BY ... DATE APR 04 1989

EDT# 101089

IMPACT LEVEL 2

NUMBER	TITLE	REFERENCES
DRAWING TRACEABILITY LIST		NEXT USED ON

NUMBER	TITLE
H-2-77573	DRAWING LIST

REV	BY-DATE	APPROVAL	BY-DATE	REV BY-DATE	DESCRIPTION	REV
1						
0		KEH APPROVAL				

REVISIONS

1 COMMENT REVIEW

WHICH FILMED

		DATE
WHC APPROVAL	JR Bauer 4/6/89	12-20
BY	S.R. BRIGGS	1988
PREPARED BY	J.D. KOLAR	12-18 1988
DR	H.HENRIKSON	7-29 1988
APPROVED BY	W.J.M/RM ITEN	7-27 1988
SAFETY	JL H/AG MINISTER	7-21 1988
APPROVED BY	CR7 JR COLLINS	7-21 1988
CHECKED BY	L HALL	7-21 1988
DRAWN BY	DJ KOLAR	5-20 1988
DESIGNED BY	DJ KOLAR	5-20 1988

U.S. DEPARTMENT OF ENERGY
RICHLAND OPERATIONS OFFICE

KAISER ENGINEERS HANFORD COMPANY

PIPING SUPPORT PLAN

PROJECT TITLE: GROUT VAULT PAIR 218-E-16-102&103

PROJ	B-714	WO	ER1060	JOB	242500
SCALE	SHOWN	BLDG	218-E-16	INDEX	0402

CAD FILE: B077598A

CAD CODE: 28-DEC-ACD2-0 13.INX

DRAWING NUMBER: H-2-77598 | SHEET 1 | OF 1 | REV 0

KEHCAD 1 FPLT SCF 1=1

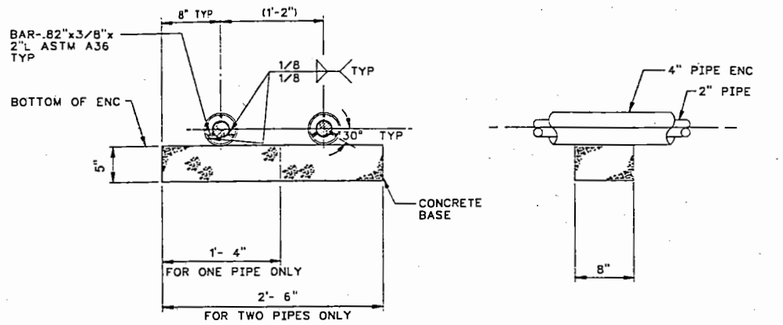

DETAIL 1 H-2-77598

ENCASED PIPE ANCHOR SYMBOL

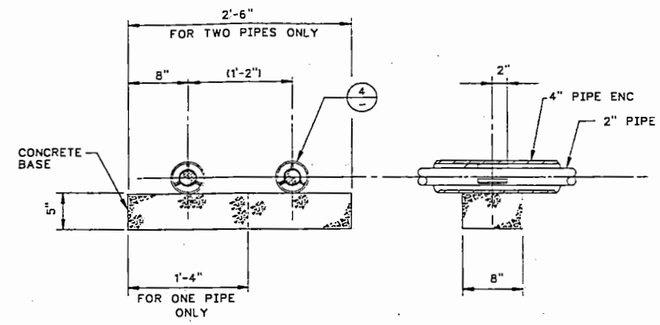

DETAIL 2 H-2-77598 & H-2-77611 SH2

ENCASED PIPE GUIDE SYMBOL

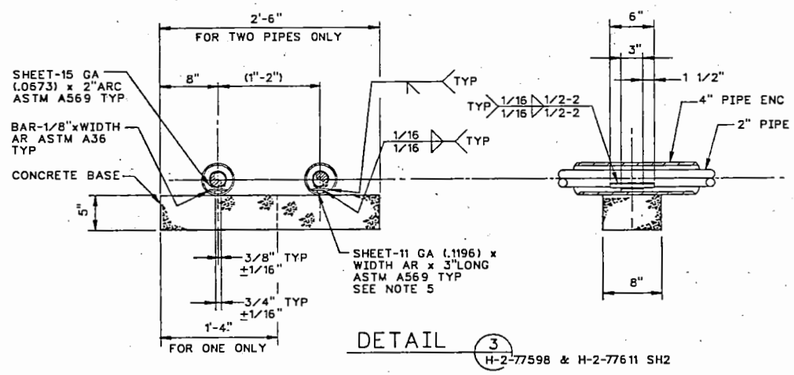

DETAIL 3 H-2-77598 & H-2-77611 SH2

ENCASED PIPE SUPPORT SYMBOL

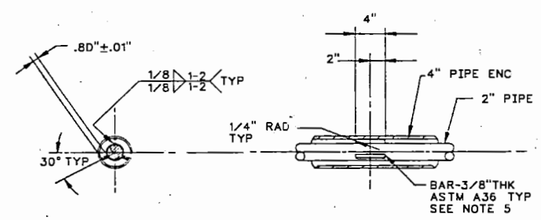

DETAIL 4

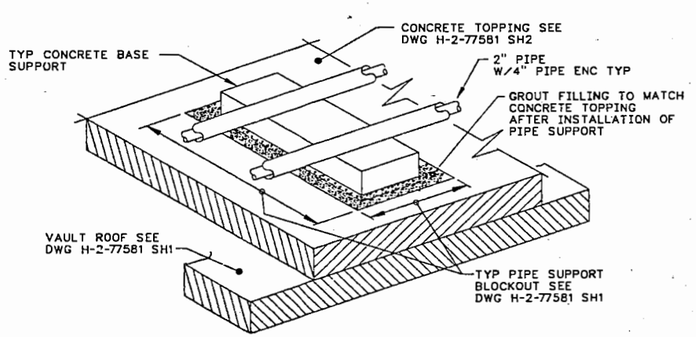

DETAIL 6 H-2-77598

SCALE : NONE

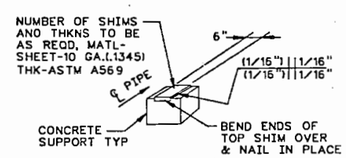

DETAIL 5

SCALE : NONE

NOTES

1. FOR PIPING LOCATION AND ELEVATIONS SEE H-2-77596.
2. FOR GENERAL NOTES SEE H-2-77596.
3. ENCASEMENT SUPPORTS SHALL BE LOCATED AT ALL ENCASED PIPE SUPPORTS AND GUIDES AS SHOWN ON DWG H-2-77598.
4. DETAIL 5 TO BE USED AS REQUIRED TO SHIM PIPE CENTER LINE TO ELEVATION REQUIRED.
5. BREAK ALL SHARP EDGES AND REMOVE ALL BURRS.

OFFICIAL RELEASE BY WHC DATE APR 04 1989

EDT #101089

IMPACT LEVEL 2

WHC APPROVAL BY JR Bunger	DATE 4/12/89	U.S. DEPARTMENT OF ENERGY RICHLAND OPERATIONS OFFICE	
		KAISER ENGINEERS HANFORD COMPANY	
PROJ ENGR GJ McCALLUM	8-4 1988	M PIPING SUPPORT DETAILS	
APPROVED BY RM ITEN	8-4 1988		
DESIGN BY DP/AG WINISTER	8-4 1988		
APPROVED BY CRZ/JR COLLINS	8-4 1988		
CHECKED BY L. HALL	7-19 1988	PROJECT TITLE GROUT VAULT PAIR 218-E-16-102 & 103	
DRAWN BY FG RITCH	5-18 1988	PROJ B-714	WO ER1060	JOB 242500
DESIGNED BY FG RITCH	5-18 1988	SCALE 1 1/2"=1'-0"	BLDG 218-E-16	INDEX 8511
CAD FILE B077599A		DRAWING NUMBER H-2-77599	SHEET 1 OF 1	REV 0
CAD CODE 28:DEC:ACD2:9.13:NN				

NUMBER	TITLE
H-2-77573	DRAWING LIST

DRAWING TRACEABILITY LIST

NUMBER	TITLE

REFERENCES

NEXT USED ON

BY-DATE	BY-DATE	REV BY DATE	DESCRIPTION	REV
APPROVAL	KEH APPROVAL		REVISIONS	

MICROFILMED

COMMENT REVIEW

KEHGAD

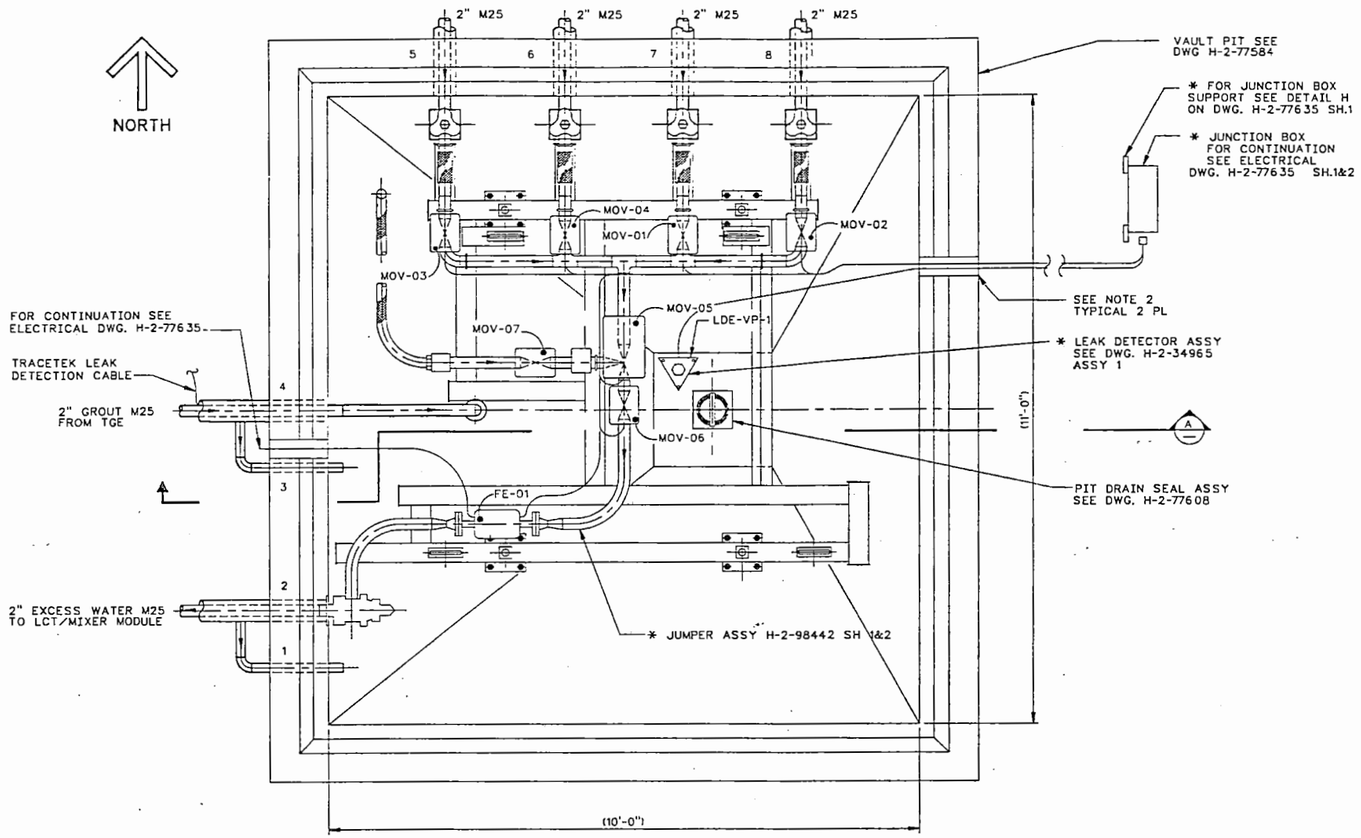

PLAN VAULT PIT 218-E-16-102 & 103

(COVER REMOVED FOR CLARITY)

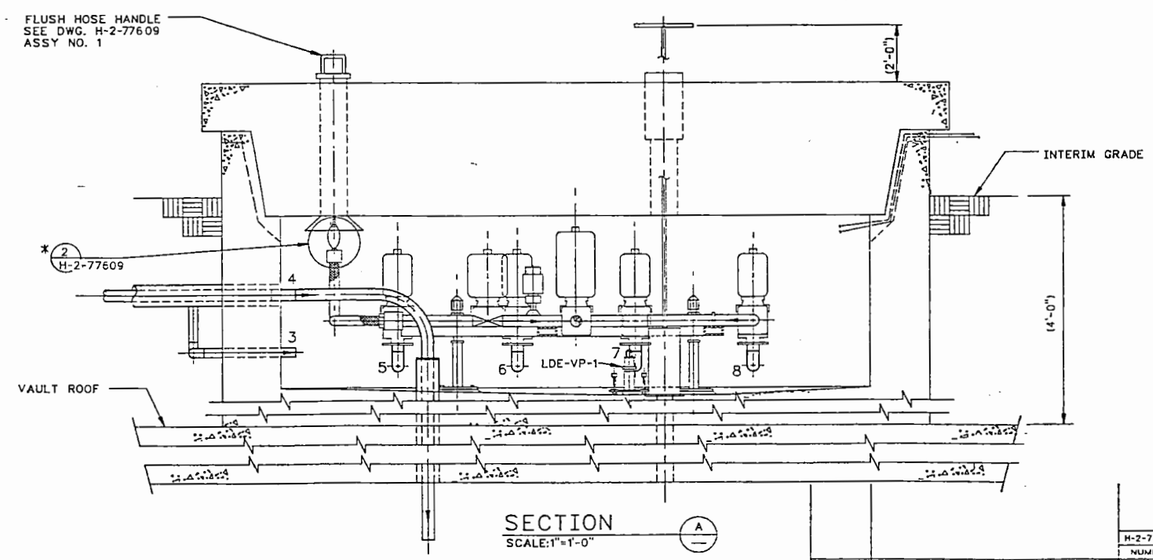

SECTION A

SCALE:1"=1'-0"

NOTES:

1. FOR GENERAL NOTES SEE DWG. H-2-77596.
2. SEAL CABLE SLOT WITH DUCT SEAL INSTALL PER MANUFACTURES SPECIFICATIONS.
3. SEE DWG. H-2-77610 FOR COVER PAINTING DIAGRAM.
4. FOR CONTINUATION OF PIPING SEE DWG. H-2-77596.
5. (*) ASTERISK INDICATES EQUIPMENT TO BE FURNISHED AND INSTALLED BY OTHERS.

OFFICIAL RELEASE BY WHC DATE APR 04 1989

EDT = 101089

IMPACT LEVEL 2

DRAWING TRACEABILITY LIST			
NUMBER	TITLE	NUMBER	TITLE
		H-2-77573	DRAWING LIST
			REFERENCES
		NEXT USED ON	

REVISIONS					
MICROFILMED	BY-DATE	BY-DATE	REV BY DATE	DESCRIPTION	REV
	APPROVAL	KEH APPROVAL			
COMMENT REVIEW					

WHC APPROVAL — DATE

U.S. DEPARTMENT OF ENERGY
RICHLAND OPERATIONS OFFICE
KAISER ENGINEERS HANFORD COMPANY

M PIPING
JUMPER ARRGT
VAULT PIT

PROJECT TITLE: GROUT VAULT PAIR 218-E-16-102&*03

DRAWN BY D.MILTON 1-15-1988	PROJ B-714	WO ER1060	JOB 242500
DESIGNED BY D.MILTON 1-15-1988	SCALE SHOWN	BLDG 218-E-16	INDEX 0402
CAD FILE ~~B077600A~~	DRAWING NUMBER H-2-77600	SHEET 1	OF 1	REV 0

~~KEHCAD~~ 1 7" PLT SCF 1=12

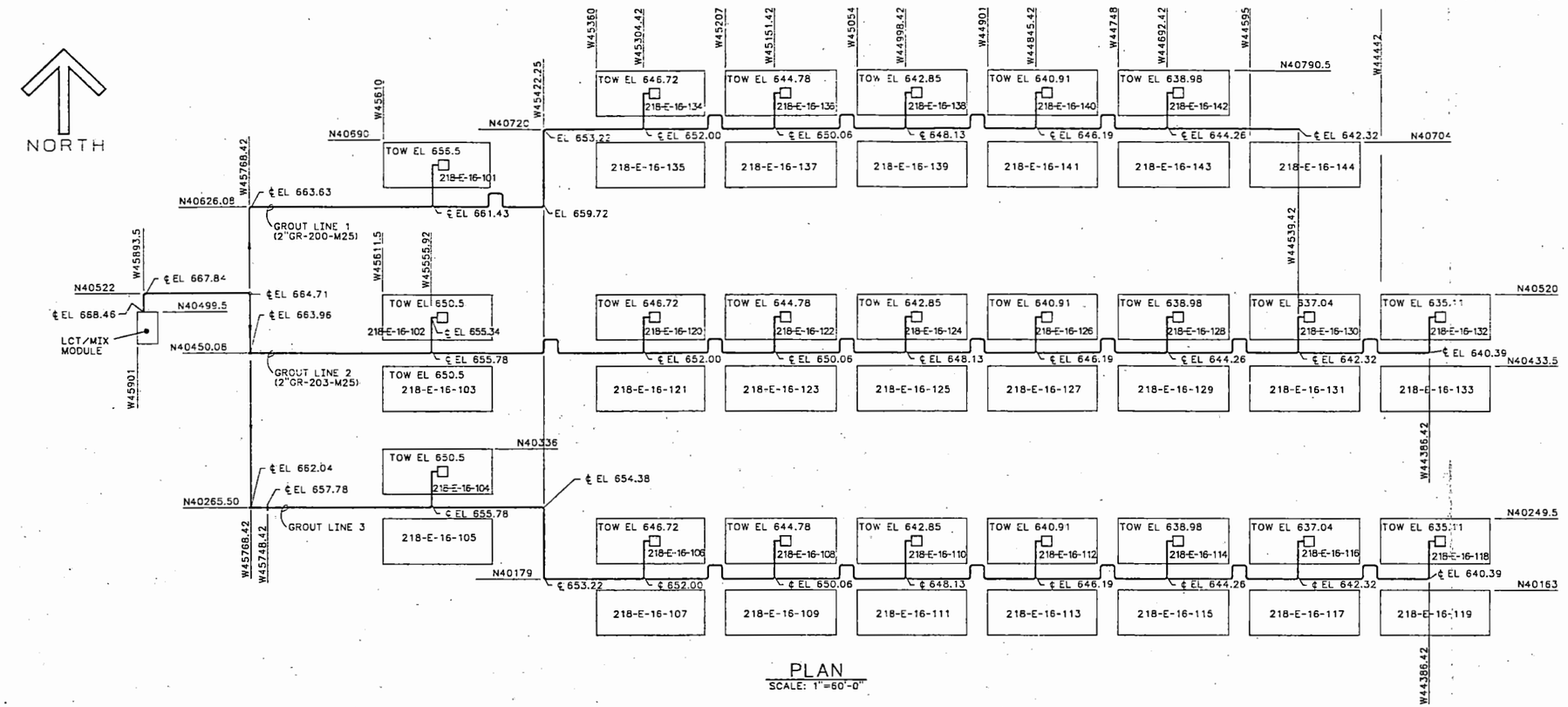

PLAN

SCALE: 1"=60'-0"

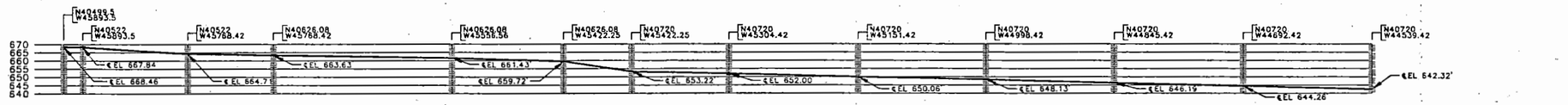

GROUT LINE 1 (2"GR-200-M25)

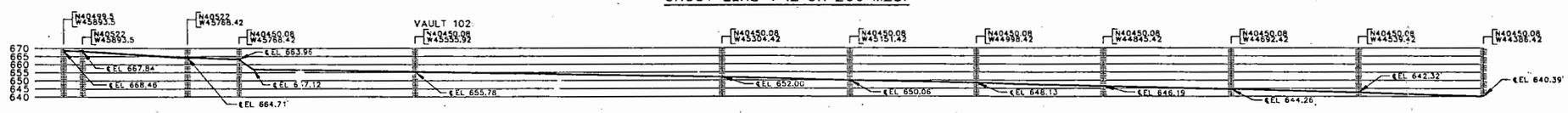

GROUT LINE 2 (2"GR-203-M25)

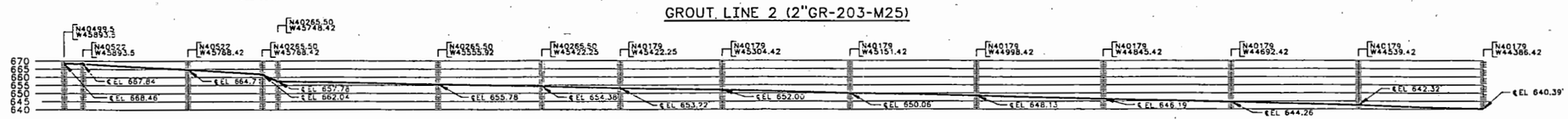

GROUT LINE 3

PROFILE GROUT LINES 1, 2 & 3

SCALE: HORIZ 1"=60'-0"
VERT 1"=30'-0"

NOTES:

1. TOW = TOP OF WALL
2. VAULT 101 WAS INSTALLED ON PROJECT B-566.
3. VAULTS 102 & 103 ARE TO BE INSTALLED ON PROJECT B-714.

OFFICIAL RELEASE BY WHC
DATE APR 04 1989

EDT # 101089

IMPACT LEVEL 2

NUMBER	TITLE
	DRAWING TRACEABILITY LIST

NUMBER	TITLE
H-2-77573	DRAWING LIST
	REFERENCES
NEXT USED ON	

MICROFILMED

APPROVAL	BY-DATE	BY-DATE	REV BY DATE	DESCRIPTION	REV
		KEH APPROVAL		REVISIONS	
COMMENT REVIEW					

WHC APPROVAL BY JRB 2/29/88

		DATE
PROJ. ENGINEER		12-28 1988
SA ENGINEERING MANAGER	J.E. BREED	7-26 88
APPROVED BY	ROBERT M. ITEN	7-25 88
SAFETY	A.G. MINISTER	7-22 88
APPROVED BY	CRZ F. PORTER	7-22 88
CHECKED BY	L. HALL	7-22 88
DRAWN BY	RH BANKEMPER SA CREGG	6-21 1988
DESIGNED BY	RH BANKEMPER	6-21 1988

U.S. DEPARTMENT OF ENERGY
RICHLAND OPERATIONS OFFICE
KAISER ENGINEERS HANFORD COMPANY

PIPING HYDRAULIC DIAG

PROJECT TITLE: GROUT VAULT PAIR 218-E-16-102 & 103

PROJ	WO	JOB
B-714	FR1060	242500

SCALE	BLDG	INDEX
SHOWN	218-E-16	0401

DRAWING NUMBER	SHEET	OF	REV.
H-2-77615	1	1	0

H277615A
C 12/21/88

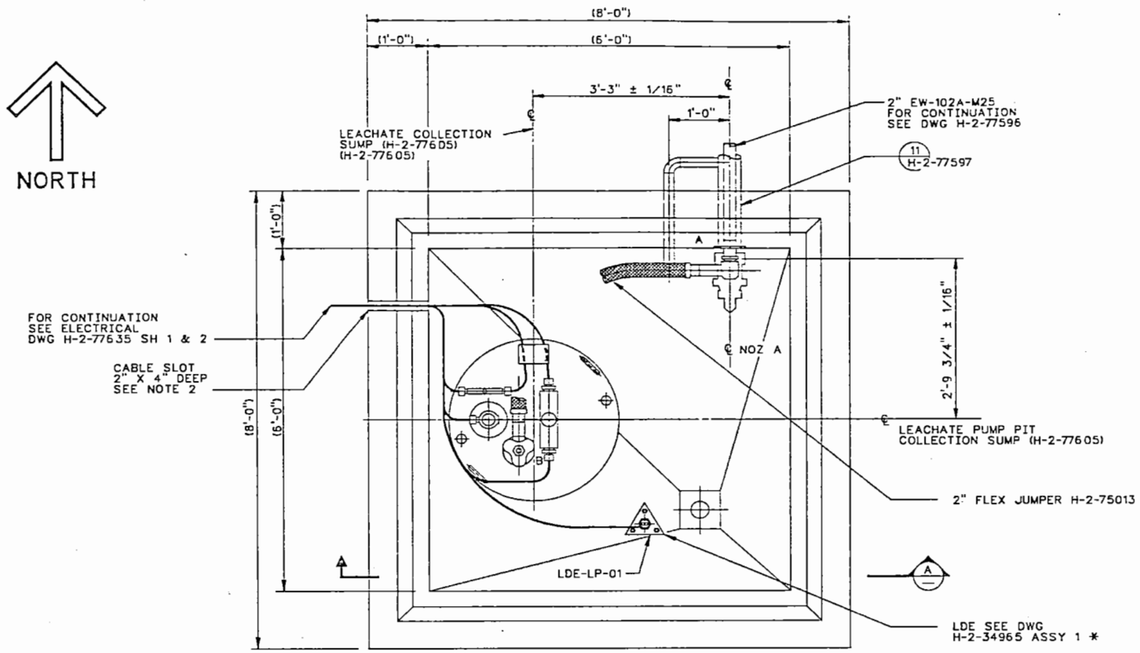

PLAN (COVER BLOCKS REMOVED FOR CLARITY)

SCALE: 1"=1'-0"

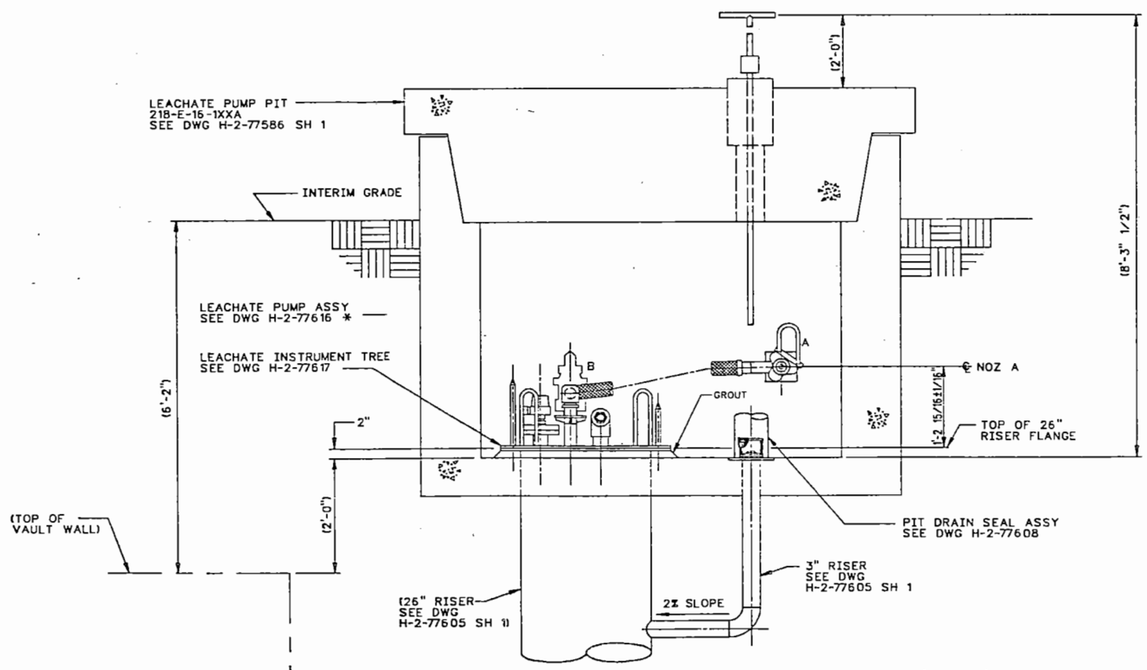

SECTION (A)

SCALE: 1"=1'-0"

NOTES:

1. FOR GENERAL NOTES SEE H-2-77596.
2. PACK CABLE SLOT WITH DUCT SEAL INSTALL PER MANUFACTURES SPECIFICATIONS.
3. SEE H-2-77610 FOR LEACHATE PUMP PIT COVER PAINTING DIAGRAM.
4. (*) ASTERISK INDICATES EXISTING EQUIPMENT TO BE RELOCATED (BY OTHERS) FROM THE PREVIOUS GROUT FILLED CONCRETE VAULT.
5. SUBSTITUTE APPROPRIATE VAULT NUMBER IN PLACE "XX".

OFFICIAL RELEASE BY WHC DATE APR 04 1989

CHARLES R. ZIOMKIS REGISTERED PROFESSIONAL ENGINEER

Rev 0 1-17-89

EDT # 101089

IMPACT LEVEL 2

DRAWING TRACEABILITY LIST			
NUMBER	TITLE	NUMBER	TITLE
		H-2-77573	DRAWING LIST
		NEXT USED ON	REFERENCES

REVISIONS				
BY-DATE	BY-DATE	REV BY DATE	DESCRIPTION	REV
APPROVAL	KEH APPROVAL			

WHC-CP-TL-WTD

COMMENT REVIEW

WHC APPROVAL	10/1/89	DATE	U.S. DEPARTMENT OF ENERGY RICHLAND OPERATIONS OFFICE
BY S.R. BRIGGS		12-18-1998	KAISER ENGINEERS HANFORD COMPANY
PROJ ENGINEER J.D. CROUCH		12-18-1988	PIPING LEACHATE PUMP PIT JMPR ARR/JMPR ASSY
DR. REQ. LEAD H. HENRIKSON		7-21-1988	
APPROVED W.J.M. RM ITEN		7-21-1988	
SAFETY AG WINISTER JLH		7-21-1988	
APPROVED CRG DK COLLINS		7-21-1988	
CHECKED L HALL		7-21-1988	PROJECT TITLE GROUT VAULT PAIR 218-E-15-102&103
DRAWN DK MILTON		5-27-1988	PROJ B-714 / WO ER1060 / JOB 242500
DESIGNED DK MILTON		5-27-1988	SCALE SHOWN / BLDG 218-E-16 / SHEET 0402
CAD FILE B077612A			DRAWING NUMBER H-2-77612 / SHEET 1 / OF 1 / REV 0
CAD CODE ZB:DEC:ACD2:9.13:NN			

KEHCAD

9011177 0033 7

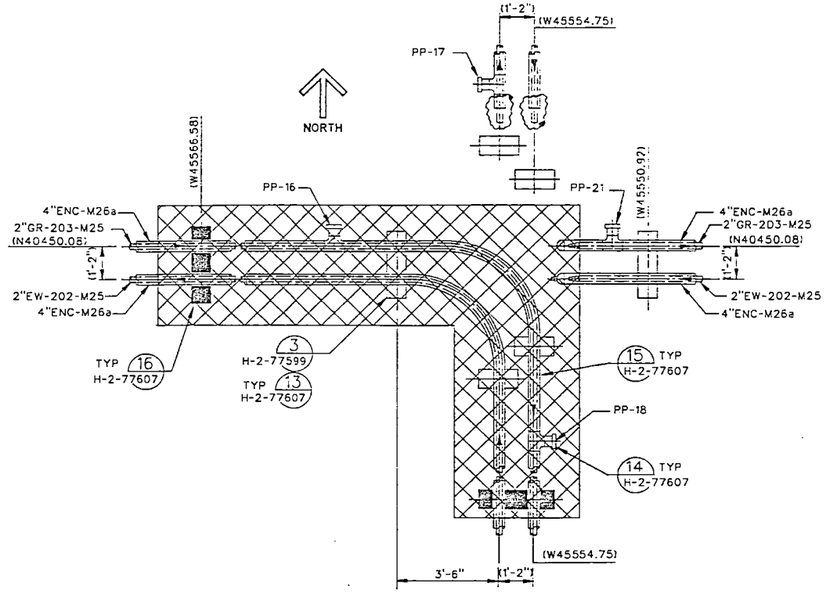

SEE NOTE 7

DETAIL 6 H-2-77596
SCALE:1/2"=1'-0"

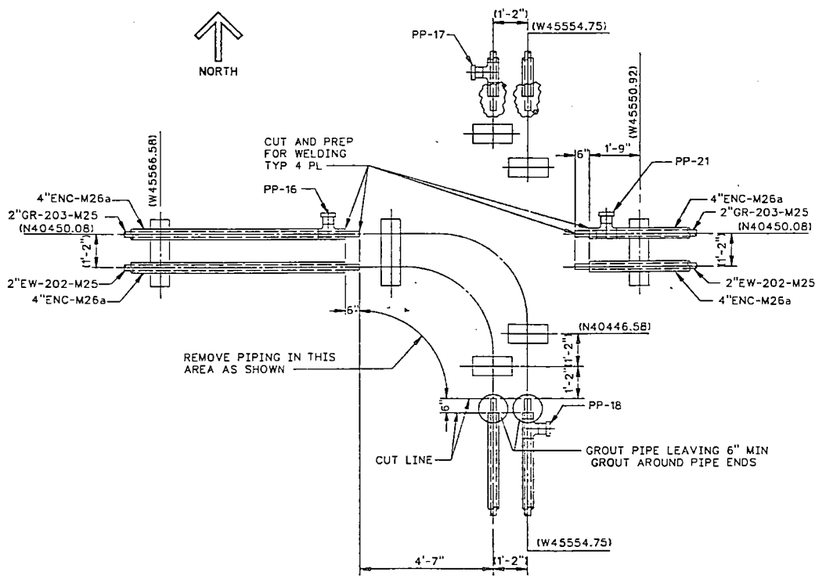

SEE NOTE 8

DETAIL 7 H-2-77596
SCALE:1/2"=1'-0"

NOTES:

1. FOR GENERAL NOTES SEE DRAWING H-2-77596.
2. THIS DETAIL SHOWS HOW THE GROUT LINE 2"GR-200-M25 AND THE EXCESS WATER LINE 2"EW-002-M25 FROM THE TRANSPORTABLE GROUT FACILITY IS DISCONNECTED FROM GROUT LINE 2"GR-201-M25 AND EXCESS WATER LINE 2"-EW-201-M25 ROUTED TO VAULT 101.
3. THIS DETAIL SHOWS HOW THE GROUT LINE 2"GR-200-M25 AND THE EXCESS WATER LINE 2"EW-002-M25 COMING FROM THE TRANSPORTABLE GROUT FACILITY ARE CONNECTED TO THE PIPING ROUTED TO VAULT 102. IT ALSO SHOWS CAPS INSTALLED ON LINES 2"GR-201-M25 & 2"EW-201-M25. THE CAPS ARE TO SEAL THESE LINES UNTIL THEY ARE REQUIRED FOR FUTURE USE.
4. THIS DETAIL SHOWS GROUT FEED LINE 2"GR-203-M25 AND EXCESS WATER LINE 2"EW-202-M25 BEING ROUTED TO VAULT 102. IT ALSO SHOWS THE CAPED EXTENTIONS GOING TO VAULT 103 AND TO FUTURE VAULTS 120 AND 121. EVERYTHING DELINEATED IN DETAIL 3 IS INCLUDED IN THE CONTRACT.
5. THIS DETAIL SHOWS WORK THAT WILL BE PERFORMED BY THE GOVERNMENT IN THE FUTURE AND IS NOT IN THE CONTRACT. THIS DETATIL SHOWS THE WORK WHICH IS REQUIRED TO DISCONNECT THE PIPING FROM VAULT 102 WHEN IT IS TO BE CLOSED. THE DETAIL SHOWS REMOVAL OF THE PIPING CONNECTING THE VAULT, IT ALSO REMOVES THE CAP ON THE GROUT LINE AND EXCESS WATER LINE GOING TO VAULT 103.
6. THIS IS A TYPICAL DETAIL SHOWING THE INSTALLATION OF CAPS ON TERMINATED ENCASED PIPE LINES.
7. THIS DETAIL SHOWS WORK THAT WILL BE PERFORMED BY THE GOVERNMENT IN THE FUTURE AND IS NOT IN CONTRACT. THE WORK INCLUDES CONNECTING THE GROUT FEED LINE 2"GR-203-M25 AND THE EXCESS WATER LINE 2"EW-202-M25 TO THE RESPECTIVE LINE ROUTED TO VAULT 103. IT ASLO SHOWS THE DISCONNECTED LINES BEING FILLED WITH CLEAN GROUT.
8. THIS DETAIL SHOWS WORK TO BE PERFORMED BY THE GOVERNMENT IN THE FUTURE AND IS NOT INCLUDED IN CONTRACT. IT SHOWS THE REMOVAL OF THE GROUT AND EXCESS WATER LINES CONNECTING VAULT 103. THESE PIPES ARE TO BE REMOVED AFTER THE VAULT HAS BEEN FILLED WITH GROUTED WASTE AND PREPARED FOR CLOSURE. IT ALSO SHOWS THE CAPS REMOVED FROM THE PIPES EXTENDING THE PIPING TO FUTUTE VAULTS.
9. THIS DETAIL SHOWS WORK TO BE PERFORMED BY THE GOVERNMENT IN THE FUTURE AND IS NOT INCLUDED IN CONTRACT. THE DETAIL SHOWS THE GROUT AND EXCESS WATER LINES 2"GR-203-M25 AND 2"EW-202-M25 CONNECTED TO THE EXTENTION PIPING GOING TO FUTURE VAULT.
10. UNPLUG EXISTING TRACETEK CABLE AT EXISTING PULL POINT PP-2, AND REMOVE BACK TO PULL POINT PP-1 WHICH IS AROUND ELBOW JUST NORTH OF TGF. PULL NEW TRACETEK CABLE IN ANNULUS FROM PP-1 TO PP-10, PP-10 TO PP-11 ETC PER SPECIFICATION B-714-C2 SECTION 16400.

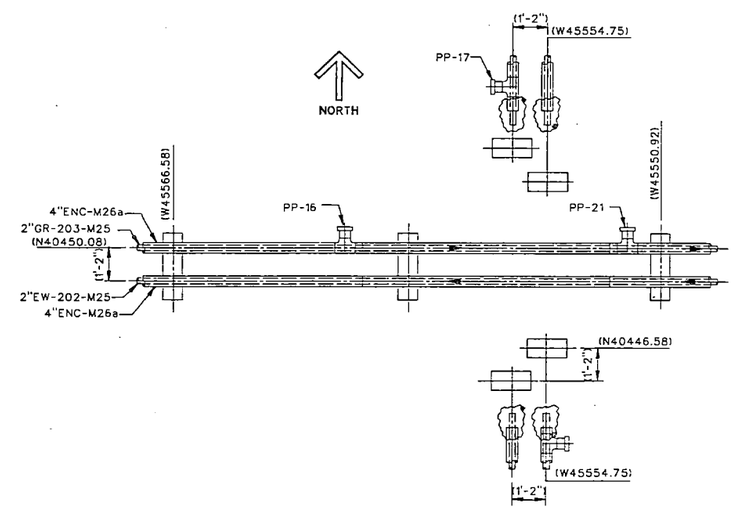

SEE NOTE 9

DETAIL 8 H-2-77596
SCALE:1/2"=1'-0"

OFFICIAL RELEASE BY WHC
DATE APR 04 1989

EDT = 101089

IMPACT LEVEL 2

WHC APPROVAL BY LR Bragg	DATE 4/4/89	U.S. DEPARTMENT OF ENERGY RICHLAND OPERATIONS OFFICE	
		KAISER ENGINEERS HANFORD COMPANY	
DRAWN BY L.L. HENRIKSON	12-29 1988 / 7-28 1988	M PIPING PLAN AND DETAILS	
APPROVED BY WJM/RM ITEN	7-27 1988		
SAFETY JLH/AG MINISTER	7-27 1988		
APPROVED BY CRZ/JR COLLINS	7-27 1988		
CHECKED BY L. HALL	8/23 1988	PROJECT TITLE GROUT VAULT PAIR 218-E-16-102-&103	
DRAWN BY R.J. LAMOUREUX	6-10 1988	PROJ B-714	WO ER1060	JOB 242500
DESIGNED BY R.J. LAMOUREUX	6-13 1988	SCALE SHOWN	BLDG 218-E-16	INDEX 0402
CAD FILE B0776118		DRAWING NUMBER H-2-77611	SHEET 2	OF 2	REV 0
CALCOMP 23:DEC:ACD2:9.13:NN				

NUMBER	TITLE	NUMBER	TITLE
		H-2-77573	DRAWING LIST
DRAWING TRACEABILITY LIST		NEXT USED ON	REFERENCES

BY-DATE	BY-DATE	REV BY DATE	DESCRIPTION	REV
APPROVAL	KEH APPROVAL			
REVISIONS				
COMMENT REVIEW				

MICROFILMED

KEHCAD

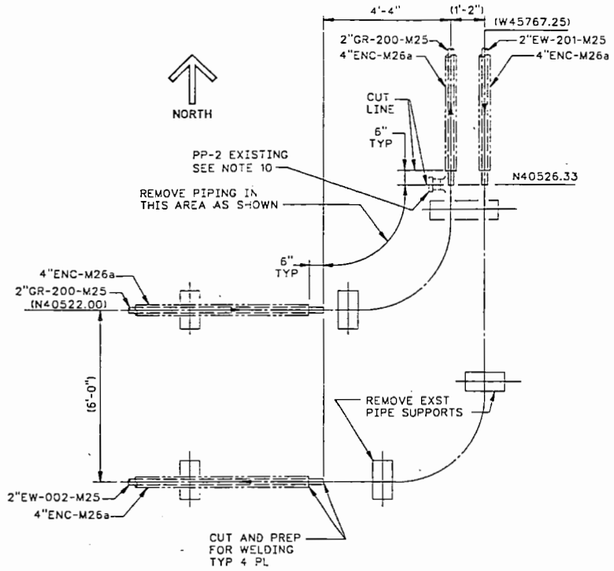

SEE NOTE 2 ON DWG H-2-77611 SH 2

DETAIL 1 H-2-77596 SH 1
SCALE:1/2"=1'-0"

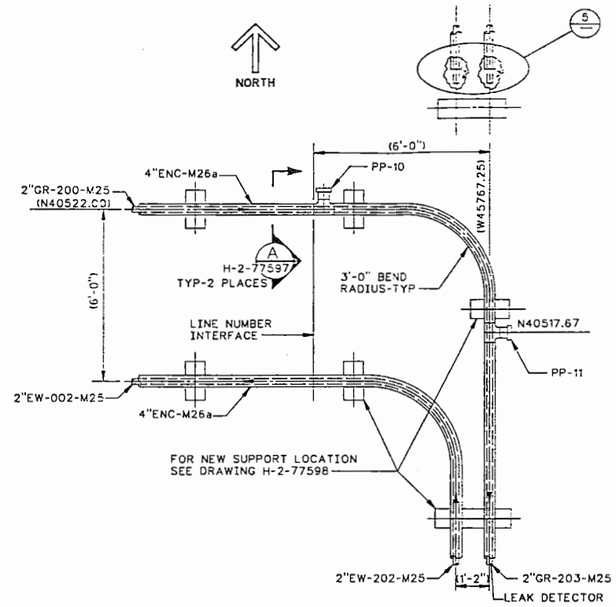

SEE NOTE 3 ON DWG H-2-77611 SH 2

DETAIL 2 H-2-77596 SH 1
SCALE:1/2"=1'-0"

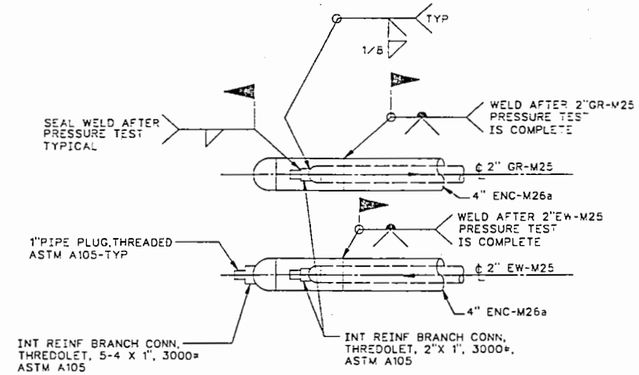

SEE NOTE 6 ON DWG H-2-77611 SH2

DETAIL 5 H-2-77596 SH1 H-2-77611 SH2
SCALE: 1 1/2"= 1'-0"
(FOR TRUE ORIENTATION SEE PIPING PLAN)

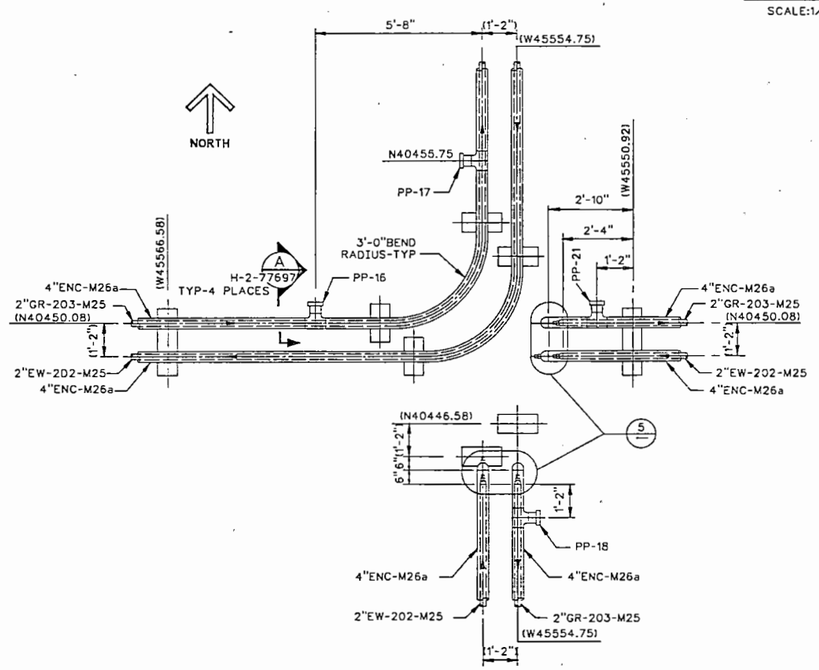

SEE NOTE 4 ON DWG H-2-77611 SH 2

DETAIL 3 H-2-77596 SH 1
SCALE:1/2"=1'-0"

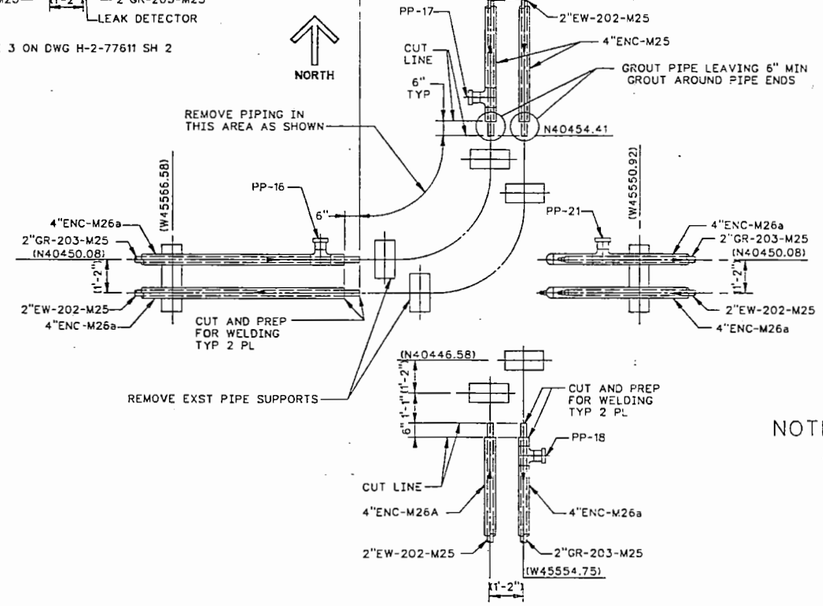

SEE NOTE 5 ON DWG H-2-77611 SH2

DETAIL 4 H-2-77596
SCALE:1/2"=1'-0"

NOTES:

1. FOR GENERAL NOTES SEE DRAWING H-2-77596.

OFFICIAL RELEASE BY WHC DATE APR 04 1989

EDT # 101089

IMPACT LEVEL 2

WHC APPROVAL BY JR Burgess	DATE 4/4/89	U.S. DEPARTMENT OF ENERGY RICHLAND OPERATIONS OFFICE
		KAISER ENGINEERS HANFORD COMPANY
DESIGNED BY H. HENRIKSON	2-25 1988 / 7-29 1988	PIPING PLAN AND DETAILS
APPROVED BY WJM RM ITEN	7-27 1988	
SAFETY BY AG MINISTER	7-21 1988	
APPROVED BY DRZ JR COLLINS	7-21 1988	PROJECT TITLE GROUT VAULT PAIR 218-E-16-102-&103
CHECKED BY L. HALL	7-21 1988	
DRAWN BY FG RITCH	5-10 1988	PROJ B-714 / WO ER1060 / JOB 242500
DETAILED BY FG RITCH	5-10 1988	SCALE SHOWN / BLDG 218-E-16 / INDEX 0402
CAD FILE B077611A		DRAWING NUMBER H-2-77611 / SHEET 1 / OF 2 / REV 0
CAD FILE ZBDEC:ACD2:9.13:NN		

NUMBER	TITLE	NUMBER	TITLE
	DRAWING TRACEABILITY LIST		REFERENCES
		H-2-77573	DRAWING LIST

MICROFILMED	BY-DATE	BY-DATE	REV BY DATE	DESCRIPTION	REV
	APPROVAL	KEH APPROVAL		REVISIONS	
	COMMENT REVIEW				

KEHCAD

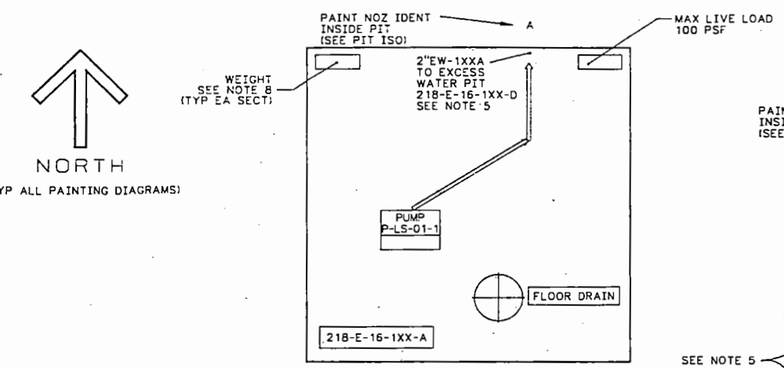

NEAR TERM LEACHATE PUMP PIT
218-E-16-1XX-A

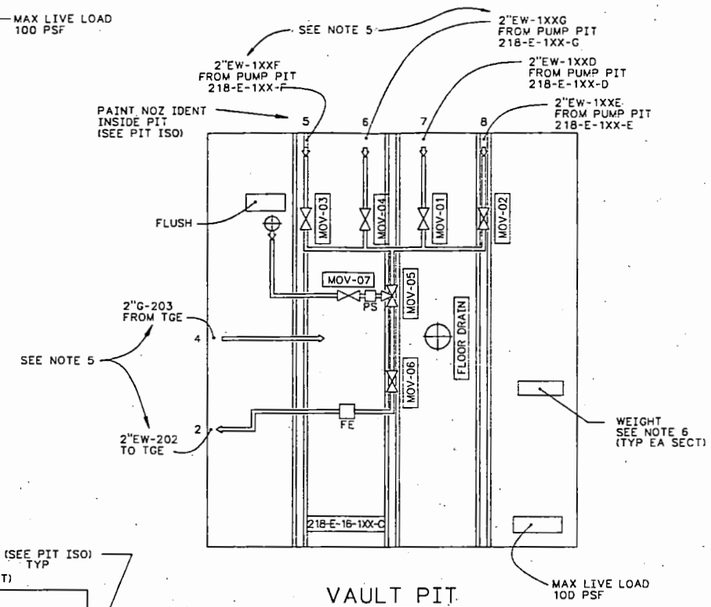

VAULT PIT
218-E-16-1XX-C

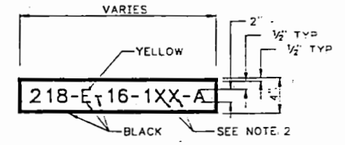

PIT IDENT

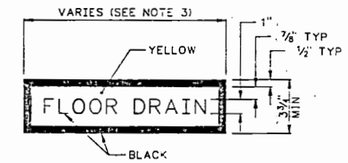

FLOOR DRAIN
AND OTHER DESCRIPTIONS AS REQUIRED

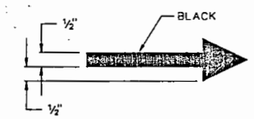

FLOW IDENT

TYPICAL PAINT DETAIL

NOTES:

1. PAINT ALL PIT IDENTIFICATIONS AND PIT COVER FLOW DIAGRAMS PER SPEC B-714-C2 EXCEPT AS OTHERWISE NOTED ON THIS DWG.
2. SUBSTITUTE APPROPRIATE VAULT NUMBER IN PLACE OF "XX".
3. BLOCK OPENING VARIES WITH DEPTH AND WIDTH OF WORDS USED FOR DESCRIPTION.
4. SUBSTITUTE APPROPRIATE PUMP NUMBER IN PLACE OF "XX".
5. ON TOP OF COVER PAINT NOZZLE IDENTIFICATION IN 1" BLACK LETTERS AS FOLLOWS: NOZZLE NUMBER, LINE DESIGNATION, LINE NUMBER & DESTINATION.
6. SEE DWG H-2-77584 SH 1 FOR CALCULATED COVER BLOCK WEIGHTS. PAINT EACH COVER BLOCK WEIGHT WITH 2" HIGH BLACK LETTERS ON 4" WIDE YELLOW BACKGROUND WITH 1/2" BLACK BORDER.
7. SEE DWG H-2-77590 SH 1 FOR CALCULATED COVER BLOCK WEIGHTS. PAINT EACH COVER BLOCK WEIGHT WITH 2" HIGH BLACK LETTERS ON 4" WIDE YELLOW BACKGROUND WITH 1/2" BLACK BORDER.
8. SEE DWG H-2-77586 SH 1 OF 2 FOR CALCULATED COVER BLOCK WEIGHTS. PAINT EACH COVER BLOCK WEIGHT WITH 2" HIGH BLACK LETTERS ON 4" WIDE YELLOW BACKGROUND WITH 1/2" BLACK BORDER.

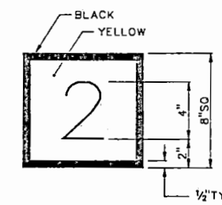

NOZZLE IDENTIFICATION

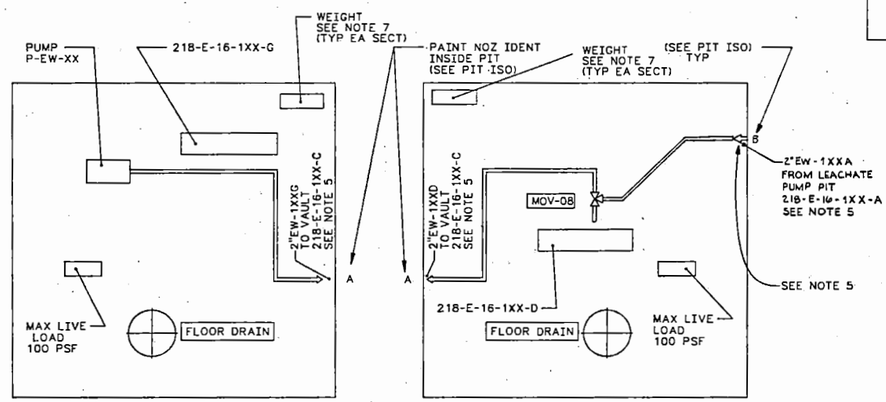

EXCESS WATER PIT
PIT 218-E-16-1XX-G

EXCESS WATER PIT
PIT 218-E-16-1XX-D

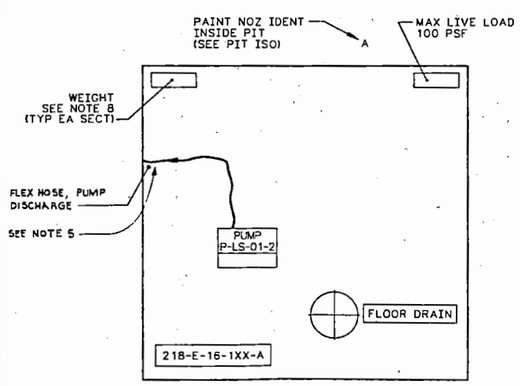

LONG TERM LEACHATE PUMP PIT
218-E-16-1XX-A

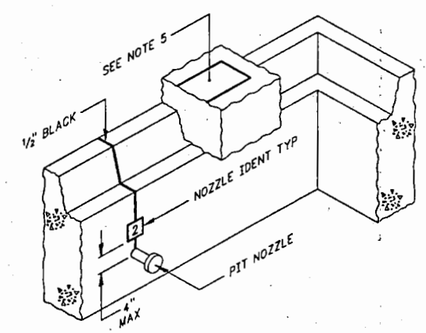

PIT ISOMETRIC

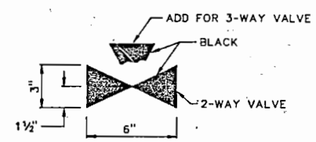

VALVE

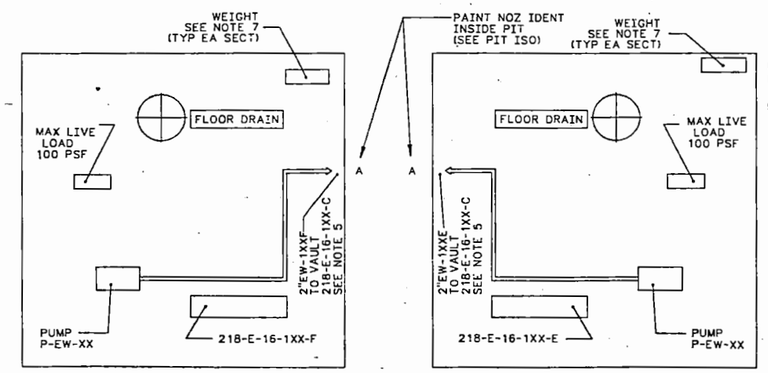

EXCESS WATER PIT
PIT 218-E-16-1XX-F

EXCESS WATER PIT
PIT 218-E-16-1XX-E

OFFICIAL RELEASE BY WHC DATE APR 04 1989

Charles R Zook RWO 1-10-89

IMPACT LEVEL Z

NUMBER	TITLE
H-2-77573	DRAWING LIST

DRAWING TRACEABILITY LIST — REFERENCES — NEXT USED ON

REV	DESCRIPTION	REV BY DATE	BY-DATE	BY-DATE
			APPROVAL	KEH APPROVAL

REVISIONS — COMMENT REVIEW — MICROFILMED

		DATE
WHC APPROVAL	BY S.A. BRIGGS	12/28/88
PROJ ENGR	J.D. CLISSOLD	1-30-89
QA	H. HENDRICKSON	7-29-88
APPROVED BY	W.M. ROBERT M. ITEN	7-27-88
SAFETY	A.G. MINISTER	7-21-88
APPROVED BY	CRZ JR. COLLINS	7-19-88
CHECKED BY	L. HALL	7-19-88
DRAWN BY	BANKEMPER	3-29-1988
DESIGNED BY	D.MILTON	3-29-1988

U.S. DEPARTMENT OF ENERGY
RICHLAND OPERATIONS OFFICE
KAISER ENGINEERS HANFORD COMPANY

PIPING
PIT COVER
PAINTING DIAGRAMS

PROJECT TITLE: GROUT VAULT PAIR 218-E-16-102&103

PROJ	WO	JOB
B-714	ER1060	242500

SCALE	BLDG	INDEX
NONE	218-E-16	0402

DRAWING NUMBER	SHEET	OF	REV
H-2-77610	1	1	0

H277610A1 C 12/29/88

9011174309

QTY	PN	DESCRIPTION	MATL/REF
X	1	ASSEMBLY	—
2	2	SAFE-LINE WIRE ROPE CLIP	McMASTER-CARR CAT#92 PG#482 #3489T27
2	3	WIRE ROPE THIMBLE	McMASTER-CARR CAT#92 PG#482 #3868T42
1	4	PIPE 4" SCHED 40	ASTM A53 TYPE S GR B
1	5	PLATE 1/4"THK X 6 1/2" O.D.	ASTM A36
1	6	PLATE 1/4"THK X 1"WIDE X LENGTH AS REQD	ASTM A36
1	7	PLATE 1/4"THK X 4" O.D.	ASTM A36
1	8	EYE BOLT 1/4" DIA	McMASTER-CARR CAT#92 PG#409 #8891T12
1	9	ROD 1/4"DIA X LENGTH AS REQD	ASTM A108 GR 1020
AR	10	SHIELDING	CONCRETE
1	11	WIRE ROPE 1/8"ø X 3'LONG	McMASTER-CARR CAT#92 PG#464 #3453T52
1	12	GASKET 6 1/4"O.D. X 4 3/4"I.D. X 1/8"THK	GARLOCK 900
AR	13	GASKET CEMENT	3M FORMULA EL-1300 ADHESIVE

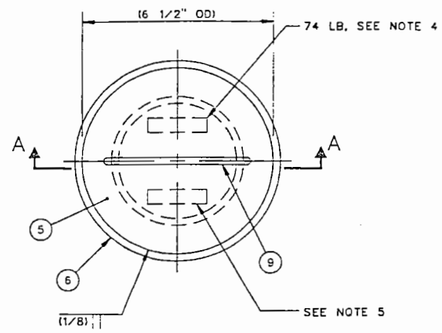

PLAN

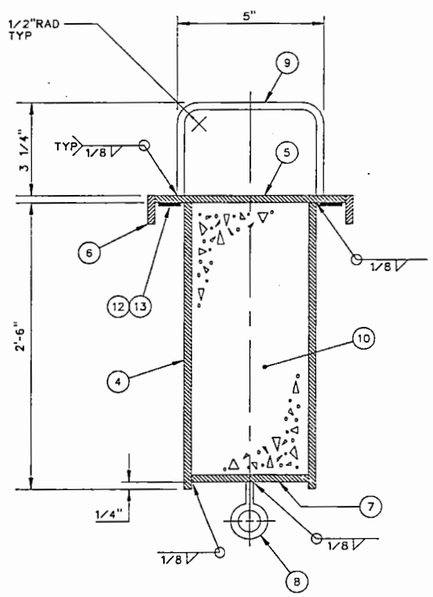

SECTION A-A

1 ASSEMBLY
SCALE: 6"=1'-0"

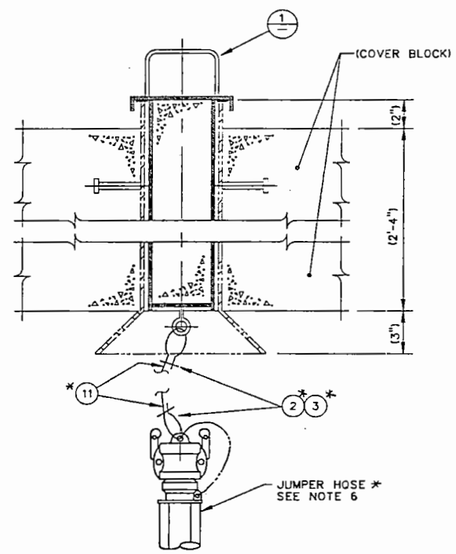

DETAIL 2 H-2-77600
SCALE: NONE

NOTES

1. *MATERIALS FABRICATION AND CLEANING SHALL BE IN ACCORDANCE WITH CONSTRUCTION SPEC B-714-C2.*
2. TOLERANCES UNLESS OTHERWISE NOTED SHALL BE FRACTIONAL ±1/16"
3. PAINT ASSEMBLY 1 WITH HIGH VISIBILITY YELLOW IAW CONSTRUCTION SPEC B-714-C2.
4. PAINT STENCILED MARKING USING 1/2" HIGH BLACK LETTERS AS FOLLOWS: WT. 74 LBS
5. PAINT STENCILED MARKING USING 1/4" HIGH BLACK LETTERS AS FOLLOWS: H-2-77609, REV 0
6. REPLACE PART #'S 24, 25, 26, 61, 62 ON DWG H-2-98442 WITH NEW 8' LONG HELICAL CORRUGATIONS HOSE. 1" MPT BOTH ENDS. FLEXONICS 401-U-SST; QUICK DISCONNECT 1" COUPLING, 10D STAINLESS STEEL WITH 1" PLUG, 10W, STAINLESS STEEL BY P-T COUPLING CO INC.
7. *(*) ASTERISK INDICATES EQUIPMENT TO BE FURNISHED AND INSTALLED BY OTHERS.*

CHARLES R. ZOLL — Rev 0 1-10-89

OFFICIAL RELEASE BY WHC DATE APR 04 1989

EDT# 101089

IMPACT LEVEL 3

WHC APPROVAL BY DR Bragg	DATE 4/4/89	U.S. DEPARTMENT OF ENERGY RICHLAND OPERATIONS OFFICE
PROJ ENGR DJ Jolly	12-23 1988	KAISER ENGINEERS HANFORD COMPANY
PROJ ENGR H. HENRIKSON	7-29 1988	M PIPING HOSE HANDLE DETAILS
APPROVED BY W.M./RM TIEN	7-27 1988	
MAT'L ENG LH/AG WINTSTER	7-21 1988	
APPROVED BY GRZ/JR COLLINS	7-21 1988	
DRAWN BY L.HALL	7-17 1988	PROJECT TITLE GROUT VAULT PAIR 218-E-16-102&103
DESIGN BY DJ KOLAR	3-30 1988	PROJ B-714 WO ER1060 JOB 242500
DESIGNED BY DJ KOLAR	3-30 1988	SCALE SHOWN BLDG 218-E-16 INDEX 0402
CAD FILE ~~80776094~~		DRAWING NUMBER H-2-77609 SHEET 1 OF 1 REV 0
CAD COORD ~~H-2-77600-2-13-MT~~		~~KEHCAD~~

NUMBER	TITLE	NUMBER	TITLE
		H-2-77573	DRAWING LIST

DRAWING TRACEABILITY LIST — REFERENCES — NEXT USED ON

BY-DATE	BY-DATE	REV & DATE	DESCRIPTION	REV
APPROVAL	KEH APPROVAL			

REVISIONS

COMMENT REVIEW

MICROFILMED

9011170609

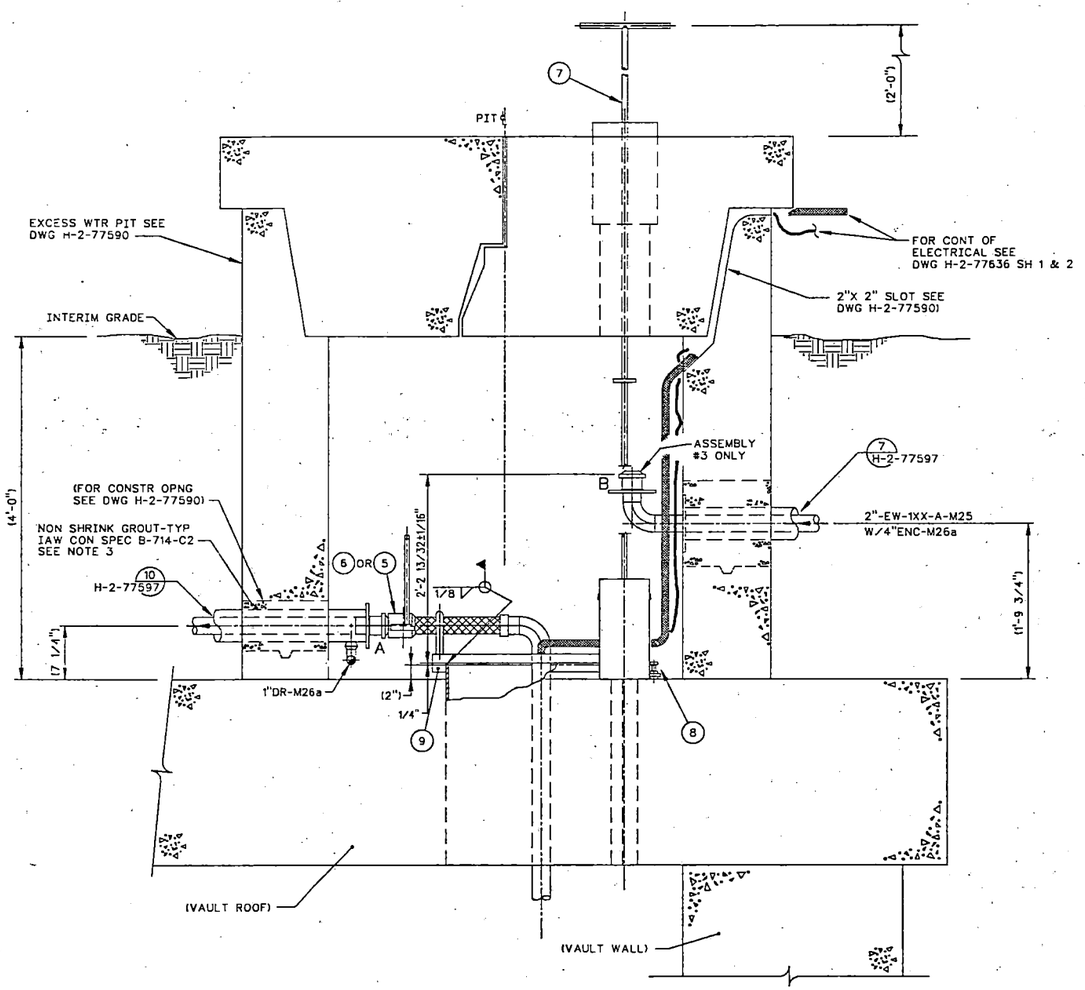

ELEVATION

FOR TRUE PLAN ORIENTATION SEE ASSEMBLY 1,2,3 OR 4 SHEET 1 (SOUTH WALL NOT SHOWN FOR CLARITY)

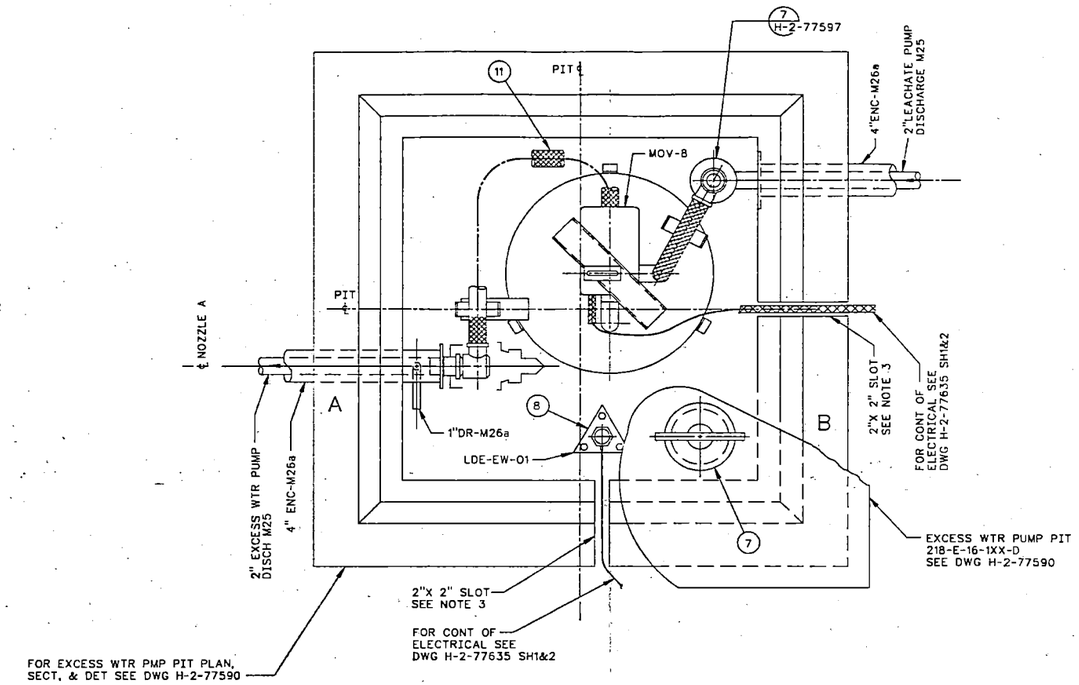

(ALTERNATE JUMPER ARRANGEMENT)

PLAN

(SIMILAR TO ASSY 3 ON SH 1)

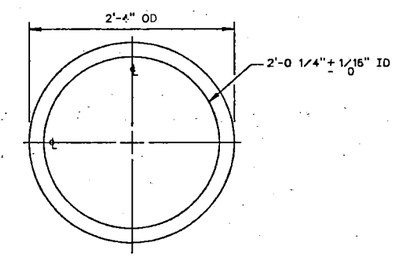

PLAN

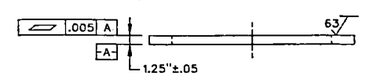

ELEVATION

(9) FLANGE

SCALE: NONE

NOTES:

1. FOR NOTES SEE H-2-77602 SH1.

OFFICIAL RELEASE BY WHC DATE APR 04 1989

EDT # 101089

Rev 0 1-12-89

IMPACT LEVEL 2

WHC APPROVAL J.R. Bunger	12-7-88	U.S. DEPARTMENT OF ENERGY RICHLAND OPERATIONS OFFICE	
S.R. BRIGGS	12-8-88	KAISER ENGINEERS HANFORD COMPANY	
PROJ ENG J.D. ROOD	12-29-88	PIPING JUMPER ARRGT EXCESS WTR PMP PIT	
DR H.HENRIKSON	7-29-1988		
APPROVED BY WJM/RM ITEN	7-27-1988		
DESIGN JLH/AG MINISTER	7-21-1988		
APPROVED CRZ/JR ROLLINS	7-15-1988		
CHECKED L. HALL	7-19-1988	PROJECT TITLE GROUT VAULT PAIR 218-E-16-102&103	
DRAWN BY DJ KOLAR	6-24-1988	PROJ B-714	W.O. ER1060
DESIGNED BY DJ KOLAR	6-24-1988	SCALE 1-1/2"=1'-0"	BLDG 218-E-16
CAD FILE B0776028		CAD CODE 28-DEC:ACD2:9.13-NN	DRAWING NUMBER H-2-77602 SHEET 2 OF 2 REV 0

NUMBER	TITLE
	DRAWING TRACEABILITY LIST

NUMBER	TITLE
H-2-77573	DRAWING LIST
REFERENCES	
NEXT USED ON	

MICROFILMED	BY-DATE	BY-DATE	REV BY DATE	DESCRIPTION	REV
APPROVAL	KEH APPROVAL				
REVISIONS					
COMMENT REVIEW					

~~KEHCAD~~ 1 "F" PLT SCF 1=8

9011061.8525

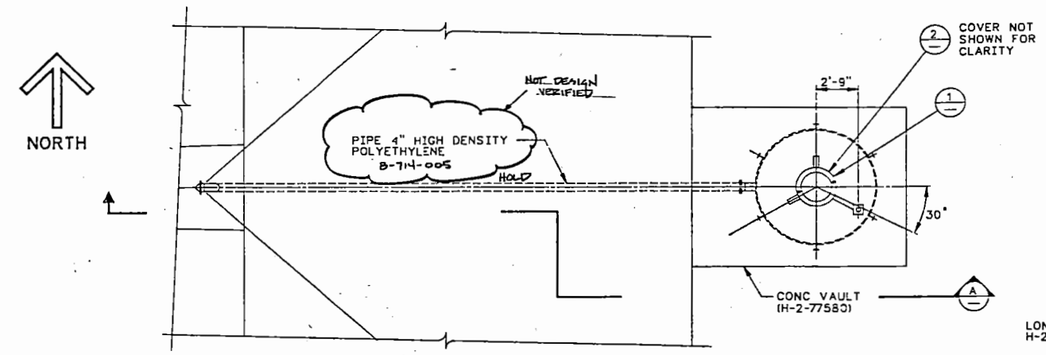

PARTIAL PLAN

SCALE: 1/4"=1'-0" (VAULT NOT SHOWN)

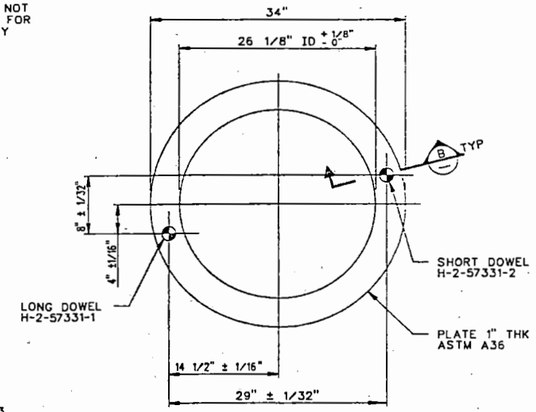

DETAIL 1

SCALE: 1 1/2"=1'-0"

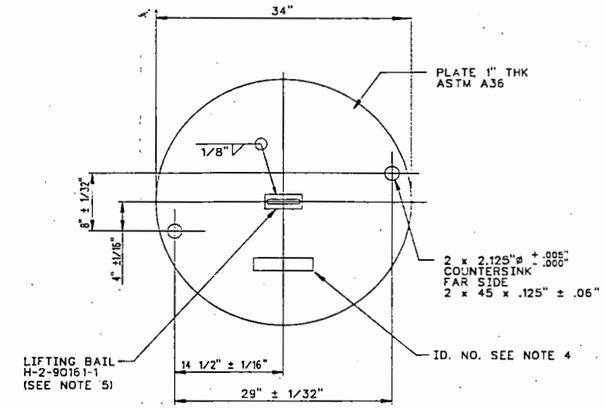

DETAIL 2

SCALE: 1 1/2"=1'-0"

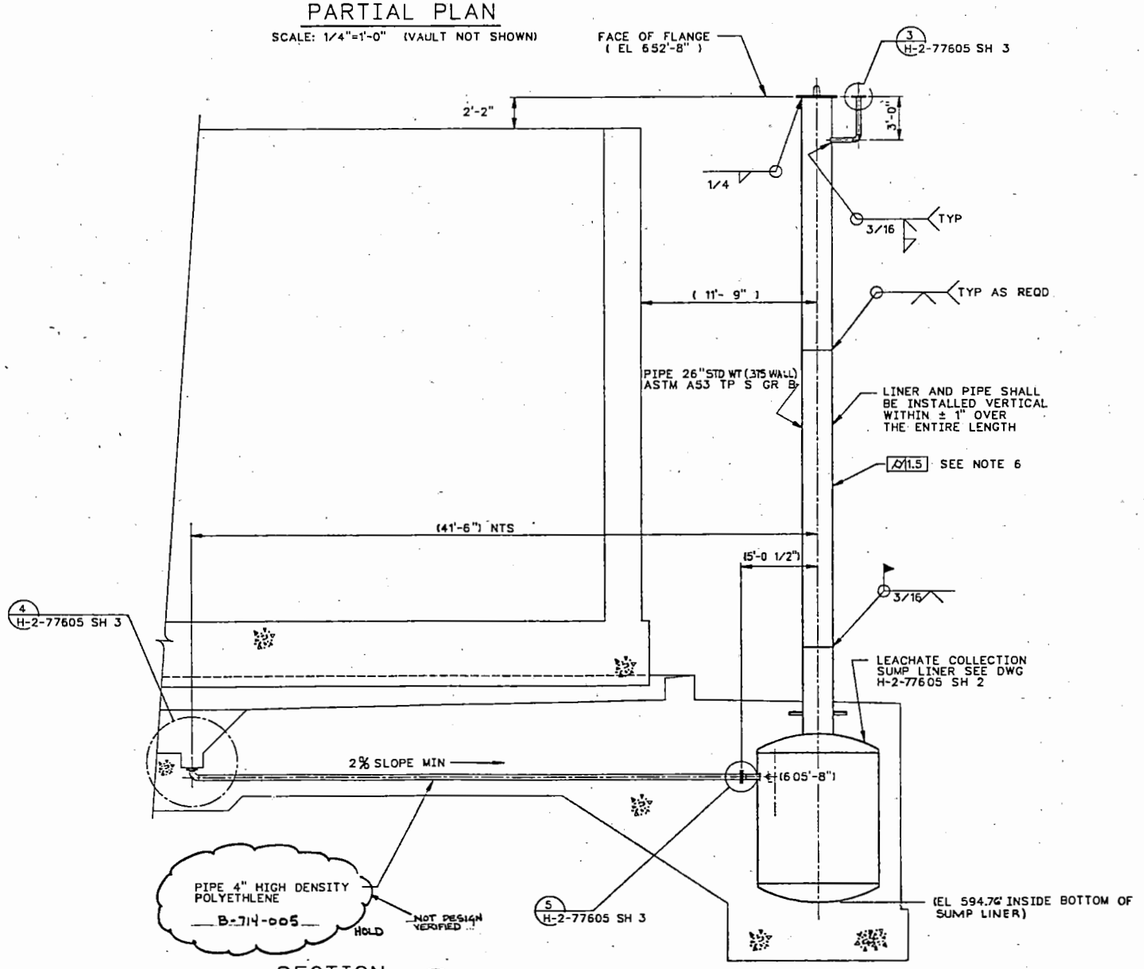

SECTION A

SCALE: 1/4"=1'-0"

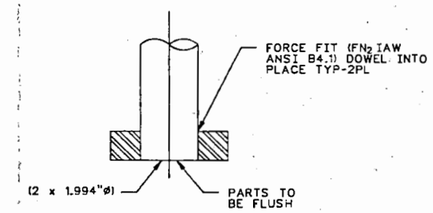

SECTION B

SCALE: 6" = 1'-0"

GENERAL NOTES:

1. ALL PIPING, WELDING, PAINTING, FABRICATION, MATERIALS, CLEANING, AND TESTING SHALL BE IN ACCORDANCE WITH CONSTRUCTION SPEC B-714-C2.
2. BREAK ALL SHARP EDGES AND CORNERS TO A A MINIMUM .010" RADIUS.
3. TOLERANCES (UOS)
   FRACTIONAL = ± 1/8"
   DECIMAL = ± .05
   ANGULAR = ± 1°
4. IDENTIFY ASSEMBLY IAW HS-BS-0015 TYPE B, BLACK ON YELLOW. WITH DRAWING AND PART No. IN LOCATION SHOWN, USING 1" HIGH CHARACTERS.
5. WELDING AND EXAMINE IN ACCORDANCE WITH AWS D1.1 SECTION 8.
6. GEOMETRIC TOLERANCE SHOWN, SHALL BE IAW ANSI 14.5M-1982.

OFFICIAL RELEASE BY WHC DATE APR 04 1989

EDT # 101089

IMPACT LEVEL 2

DRAWING TRACEABILITY LIST			
NUMBER	TITLE	REFERENCES	
		NUMBER	TITLE
		H-2-77573	DRAWING LIST
		H-2-57331	MECHANICAL EQUIP DETAILS SHORT & LONG DOWELS
		H-2-90161	STANDARD RIGID LIFTING BAILS
NEXT USED ON			

REV	DESCRIPTION	REV BY DATE	BY-DATE	BY-DATE
			APPROVAL	KEH APPROVAL

REVISIONS

COMMENT REVIEW

MICROFILMED

WHC	DATE	U.S. DEPARTMENT OF ENERGY RICHLAND OPERATIONS OFFICE	
APPROVED BY SR SAUGES	12-28 1988	KAISER ENGINEERS HANFORD COMPANY	
PROJ ENGR J D ELLIOTT	12-14 1988	PIPING	
QA ENGR H. HENRIKSON	7-27 1988	LEACHATE COLL SUMP LINER PLAN, SECT, AND DET	
APPROVED BY RJM/RM ITEN	7-15 1988		
APPROVED BY H/DK LUNDGREN	7-15 1988		
APPROVED BY RCT/JR COLLINS	7-21 1988	PROJECT TITLE	
APPROVED BY Wm ZICKUHR	7-15 1988	GROUT VAULT PAIR 216-E-16-102 & 103	
DRAWN BY DK MILTON	5-27 1988	PROJ. B-714	WO ER1060	JOB 242500
DESIGNED BY DK MILTON	5-27 1988	SCALE SHOWN	BLDG 218-E-16	INDEX 2501
CADFILE 0077605A		DRAWING NUMBER H-2-77605	SHEET 1 OF 3	REV 0
CAD FILE				

KEHCAD

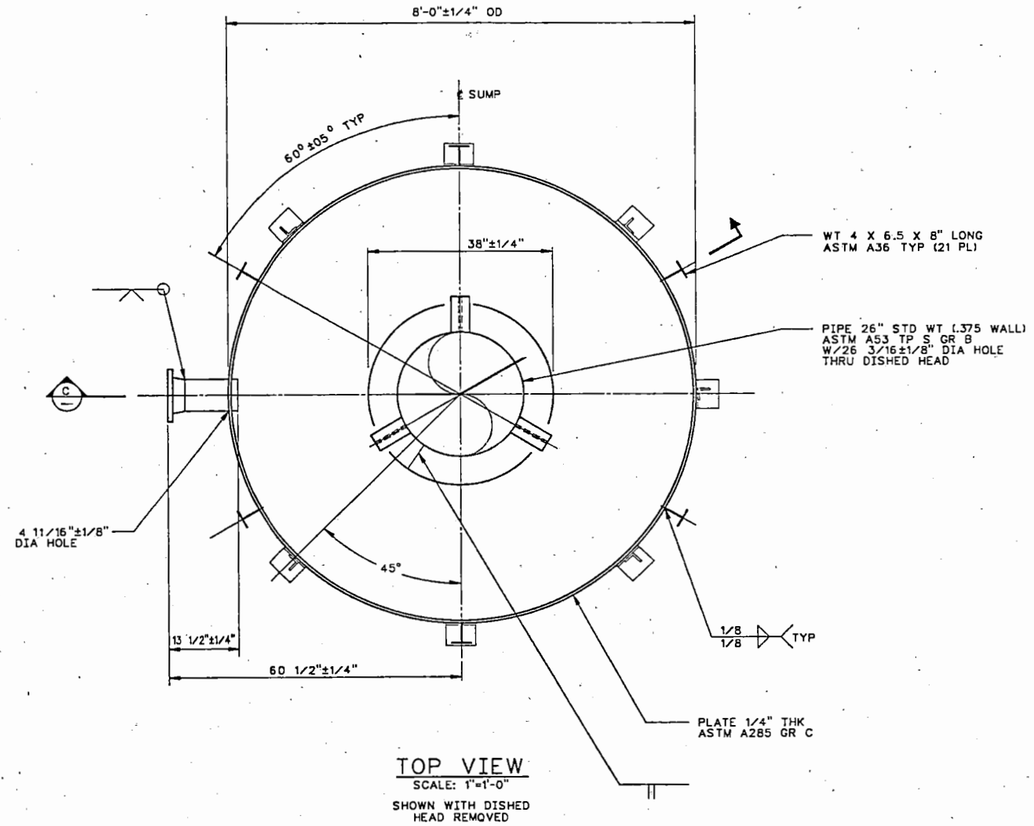

TOP VIEW
SCALE: 1"=1'-0"
SHOWN WITH DISHED HEAD REMOVED

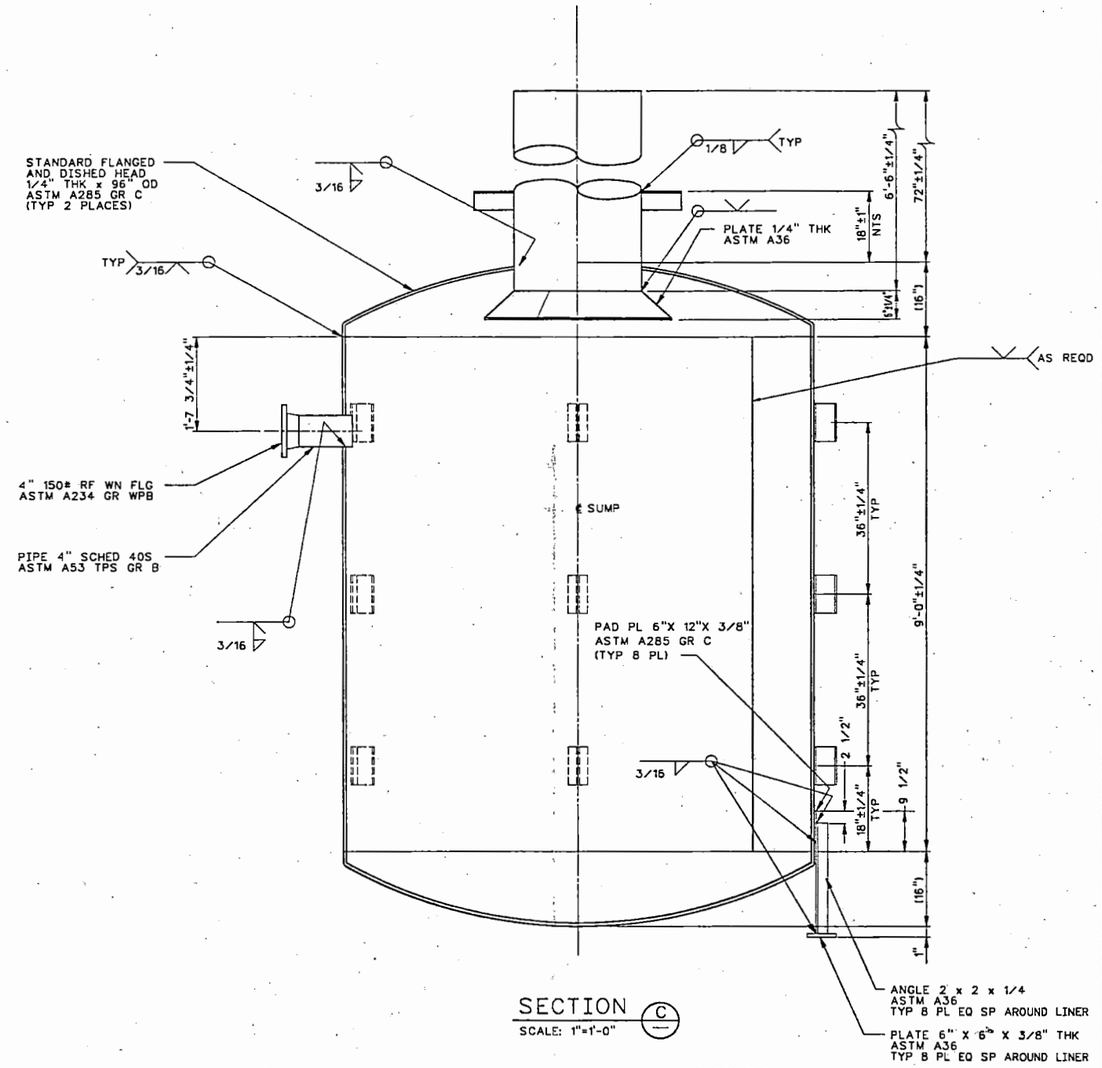

SECTION C
SCALE: 1"=1'-0"

NOTES:

1. FOR GENERAL NOTES SEE SH 1.
2. APPROXIMATE DRY WEIGHT = 4300 LB

OFFICIAL RELEASE BY WHC
DATE APR 04 1989

EDT # 101089

IMPACT LEVEL 2

WHC APPROVAL	DATE	U.S. DEPARTMENT OF ENERGY RICHLAND OPERATIONS OFFICE	
		KAISER ENGINEERS HANFORD COMPANY	
PROJ ENGR JD CLOSE	8-4 1988	PIPING LEACHATE COLL SUMP LINER TOP VIEW AND SECT	
GA REP JE BREED	8-4 1988		
APPROVED BY RMI/EA DUKLETH	8-4 1988		
SAFETY AGM/DK LUNDGREN	8-4 1988		
APPROVED BY CRZ/JRL PORTER	8-4 1988		
CHECKED BY Wm ZICKUHR	5-20 1988	PROJECT TITLE GROUT VAULT PAIR 218-E-16-102&103	
DRAWN BY DK MILTON	5-2 1988	PROJ B-714	WO ER1060	JOB 242500
DESIGNED BY DK MILTON	5-2 1988	SCALE SHOWN	BLDG 218-E-16	ENGLE 2500
CAD FILE B077605B		DRAWING NUMBER H-2-77605	SHEET 2	OF 3	REV 0
DATE SCHED 29-DEC-ACD2:9.13:NN				

NUMBER	TITLE	REFERENCES
	DRAWING TRACEABILITY LIST	NEXT USED ON
H-2-77573	DRAWING LIST	

APPROVAL	BY-DATE	BY-DATE	REV BY DATE	DESCRIPTION	REV
	KEH APPROVAL			REVISIONS	
COMMENT REVIEW					

MICROFILMED

~~KEHCAD~~

7760553 U
7711106

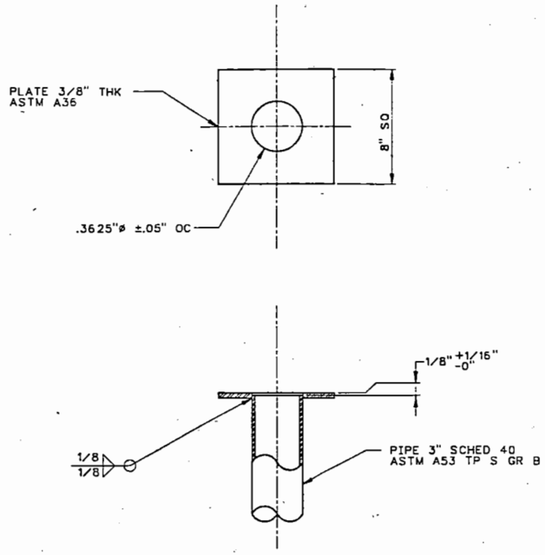

DETAIL 3 H-2-77605 SH 1
SCALE: 3"=1'-0"

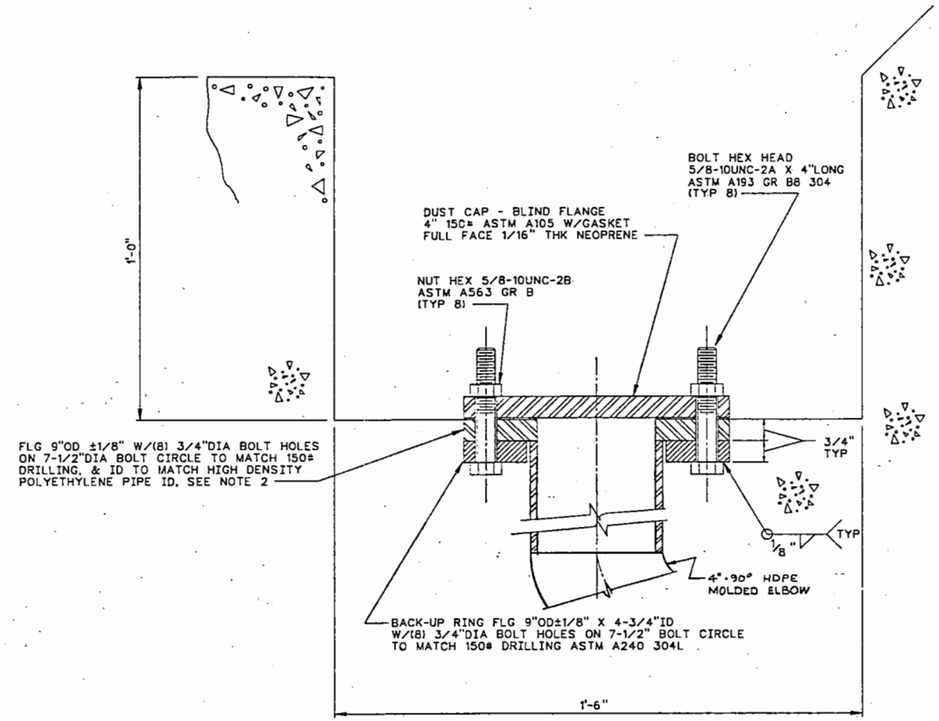

DETAIL 4 H-2-77605 SH 1
SCALE: 6"= 1'-0"

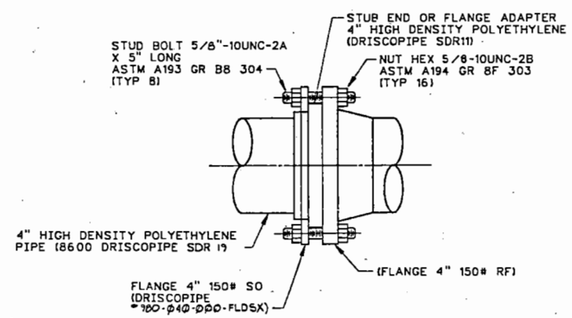

DETAIL 5 H-2-77605 SH 1
SCALE: 3"= 1'-0"

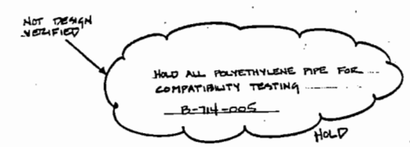

NOTES:

1. FOR GENERAL NOTES, SEE SH 1.
2. INSTALL HIGH DENSITY POLYETHENE FLG ASTM D3350 TO PIPE IN ACCORDANCE WITH MANUFACTURE RECOMMENDATIONS.
3. INSTALL BLIND FLANGE DUST COVER DURING CONCRETE POUR. REMOVE AND REPLACE WITH DRAINAGE PIPE.

OFFICIAL RELEASE BY WHC
DATE APR 04 1989

EDT # 101089

IMPACT LEVEL 2

WHC APPROVAL BY JR Bratt	DATE 7/1/88	U.S. DEPARTMENT OF ENERGY RICHLAND OPERATIONS OFFICE	
		KAISER ENGINEERS HANFORD COMPANY	
PROJ ENG	4-28 1988	PIPING LEACHATE COLL SUMP LINER DETAILS	
ENGR CHERIKSON	7-29 1988		
APPROVED WJM/RM JIEN	7-29 1988		
SAFETY JLH/DK LUNDGREN	7-29 1988		
APPROVED JR COLLINS	7-29 1988		
PROJECT BY Wm ZICKUHR	5-19 1988	PROJECT TITLE GROUT VAULT PAIR 218-E-16-102 & 103	
DRAWN BY DK MILTON	3-2 1988	PROJ B-714	WO ER1060	JOB 242500
DESIGNED BY DK MILTON	3-2 1988	SCALE SHOWN	BLDG 218-E-16	INDEX 2500
CAD FILE B077605C		DRAWING NUMBER H-2-77605	SHEET 3	OF 3	REV 0
CAD TOOL ZB:DEC:ACD2:9.13:NN				

NUMBER	TITLE	REFERENCES
DRAWING TRACEABILITY LIST		NEXT USED ON

NUMBER	TITLE
H-2-77573	DRAWING LIST

BY-DATE	BY-DATE	REV BY DATE	DESCRIPTION	REV
APPROVAL	KEH APPROVAL			
REVISIONS				
COMMENT REVIEW				

MICROFILMED

~~KEHCAD~~

9011171503151

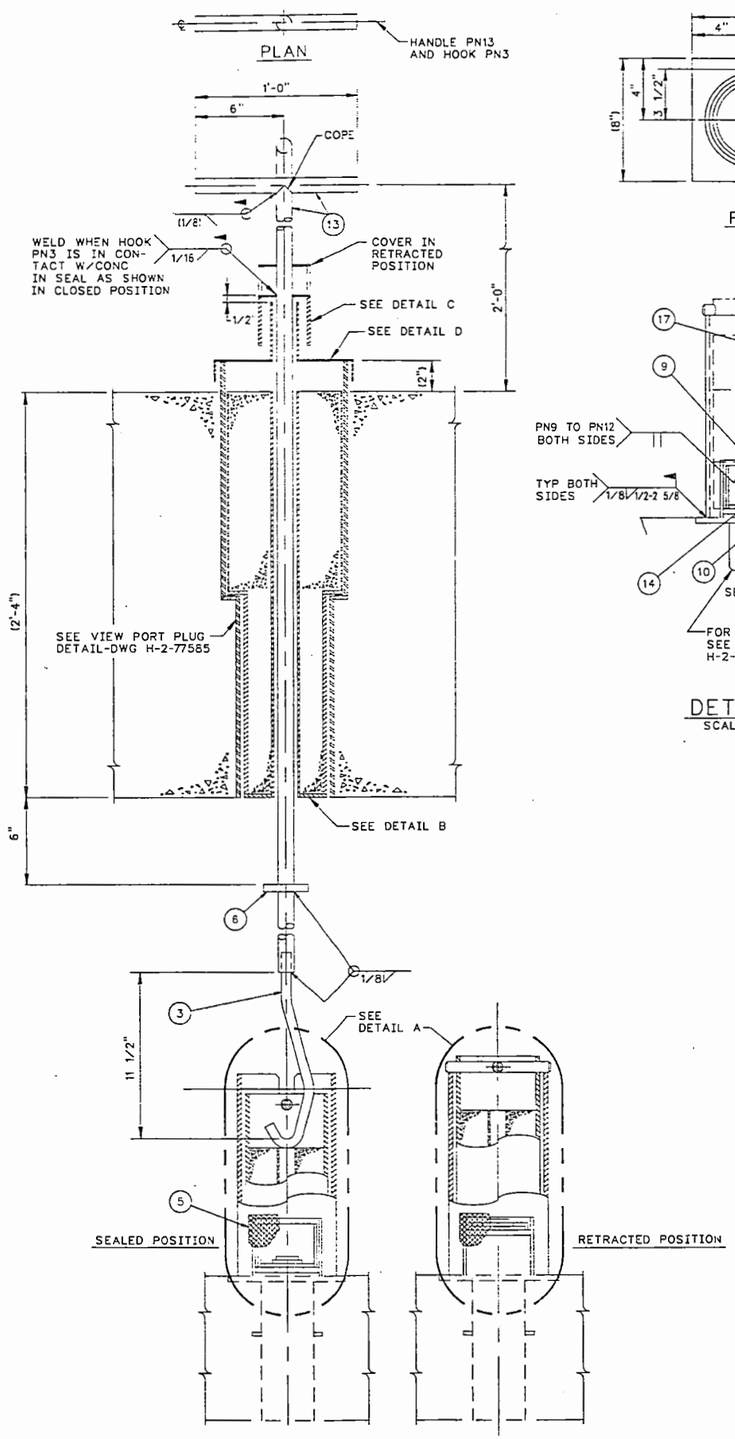

ELEVATION
1 ASSEMBLY
SCALE: 3"=1'-0"

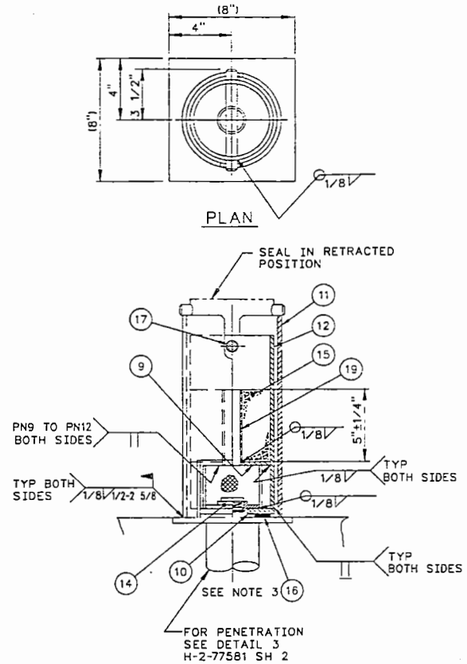

DETAIL A
SCALE: 3"=1'-0"

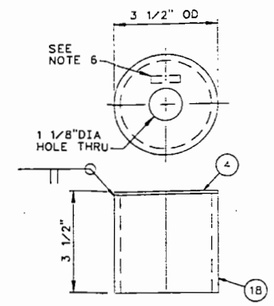

DETAIL C
SCALE: 6"=1'-0"

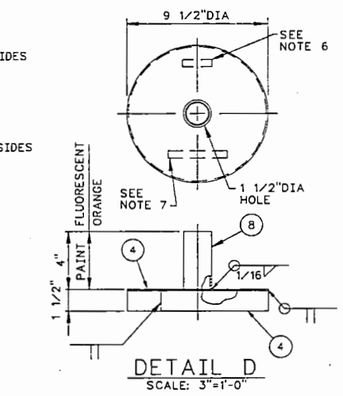

DETAIL D
SCALE: 3"=1'-0"

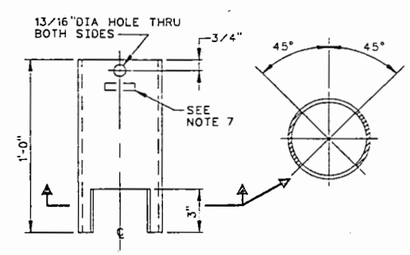

12 TUBE
SCALE: 3"=1'-0"

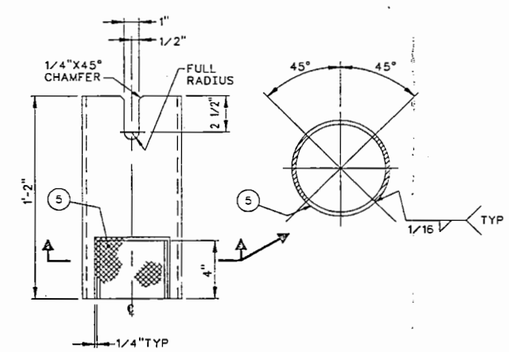

11 GUIDE
SCALE: 3"=1'-0"

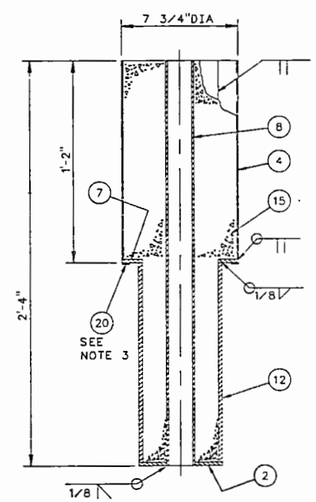

DETAIL B
SCALE: 3"=1'-0"

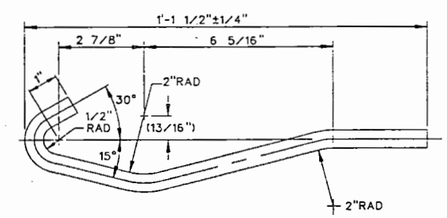

3 HOOK
SCALE: 6"=1'-0"

QTY	PN	DESCRIPTION	MATERIAL
	1	ASSEMBLY	
1	2	PLATE, 1/4"THK X 5 9/16"OD X 2"ID	ASTM A36
1	3	HOOK, BAR, ROUND 5/8"	ASTM A108 GR 1020
AR	4	12 GAUGE SHEET (.1046)	ASTM A569
AR	5	WIRE CLOTH 6 X6 X.063 NO 9220T39 McMASTER-CARR CAT#92	GALVANIZED STEEL
1	6	PLATE 1/2"THK X 3"OD X 1 1/8"ID	ASTM A36
1	7	PLATE, 1/4"THK X 7 3/4"OD X 5"ID	ASTM A36
AR	8	PIPE 1 1/2" SCHED 80	ASTM A106 GR B
1	9	PLATE 1/4"THK X 5"DIA W/1 11/32"DIA HOLE ON ℄	ASTM A36
1	10	PLATE 3/8"THK X 5 9/16"OD X 2"ID	ASTM A36
1	11	GUIDE, PIPE, 6"SCHED 40	ASTM A53 TYPE S GR B
AR	12	PIPE, 5"SCHED 40	ASTM A53 TYPE S GR B
AR	13	PIPE, 3/4"SCHED 80	ASTM A106 GR B
1	14	CHECK VALVE, 2" 150# 3.51N H_2O CRACKING PRESS	CHECK ALL MFG CO 2"FIV-SS-T-1/8
AR	15	SHIELDING (APPROX WT 143 LBS)	CONCRETE-COMMERCIAL
1	16	GASKET 1/4"THK X 5"OD X 3"ID	NEOPRENE RUBBER 35-45 DUROMETER
1	17	ROD, 3/4"DIA X 7"LONG	ASTM A108 GR 1020
1	18	PIPE, 3"SCHED 40	ASTM A53 TYPE S GR B
1	19	PIPE, 1"SCHED 40	ASTM A106 TYPE S GR B
1	20	GASKET, 1/8"THK X 7 3/4"OD X 6 3/4"ID	NEOPRENE, GARLOCK #8312

GENERAL NOTES:

1. FABRICATION, MATERIALS & CLEANING SHALL BE IN ACCORDANCE WITH CONSTRUCTION SPEC B-714-C2
2. TOLERANCES UNLESS OTHERWISE NOTED SHALL BE FRACIONAL ±1/16" ANGULAR ±1/2°
3. BOND GASKET PN16 TO PLATE PN10, BOND GASKET PN20 TO PLATE PN7 WITH 3M FORMULA 1300 ADHESIVE.
4. BREAK ALL SHARP EDGES & CORNERS TO .010 MINIMUM.
5. ESTIMATED WEIGHT OF DRAIN SEAL, LESS GUIDE (PN11) 32LBS.
6. PAINT STENCILED MARKING USING 1/4" HIGH BLACK LETTERS ON YELLOW AS FOLLOWS: H-2-77608, REV 0
7. PAINT STENCILED MARKING, USING 1/2" HIGH LETTERS BLACK ON YELLOW AS FOLLOWS: ASSY#1-WT 105LBS SEAL PLUG WT 32LBS

OFFICIAL RELEASE BY WHC
DATE APR 04 1989

EDT # 101089

IMPACT LEVEL 2

NUMBER	TITLE
DRAWING TRACEABILITY LIST	

NUMBER	TITLE
H-2-77573	DRAWING LIST
REFERENCES	
NEXT USED ON	

BY-DATE	BY-DATE	REV BY DATE	DESCRIPTION	REV
APPROVAL	KEH APPROVAL			
REVISIONS				
COMMENT REVIEW				

MICROFILMED

WHC APPROVAL — DATE 4/4/89

U.S. DEPARTMENT OF ENERGY
RICHLAND OPERATIONS OFFICE
KAISER ENGINEERS HANFORD COMPANY

PIPING DRAIN SEAL ASSEMBLY & DETAILS

DRAWN BY	L.HALL	7-19-1988
DESIGNED BY	DJ KOLAR	3-31-1988
DESIGNED BY	DJ KOLAR	3-31-1988
CAD FILE	B077605A	
CAD CODE	25-DFC-ACD2-9.13-NN	

PROJECT TITLE: GROUT VAULT PAIR 218-E-16-102&103

PWO	B-714	ER1060	JOB 242500
SCALE	SHOWN	218-E-16	INDEX 0402

DRAWING NUMBER	SHEET	OF	REV
H-2-77608	1	1	0

KEHCAD

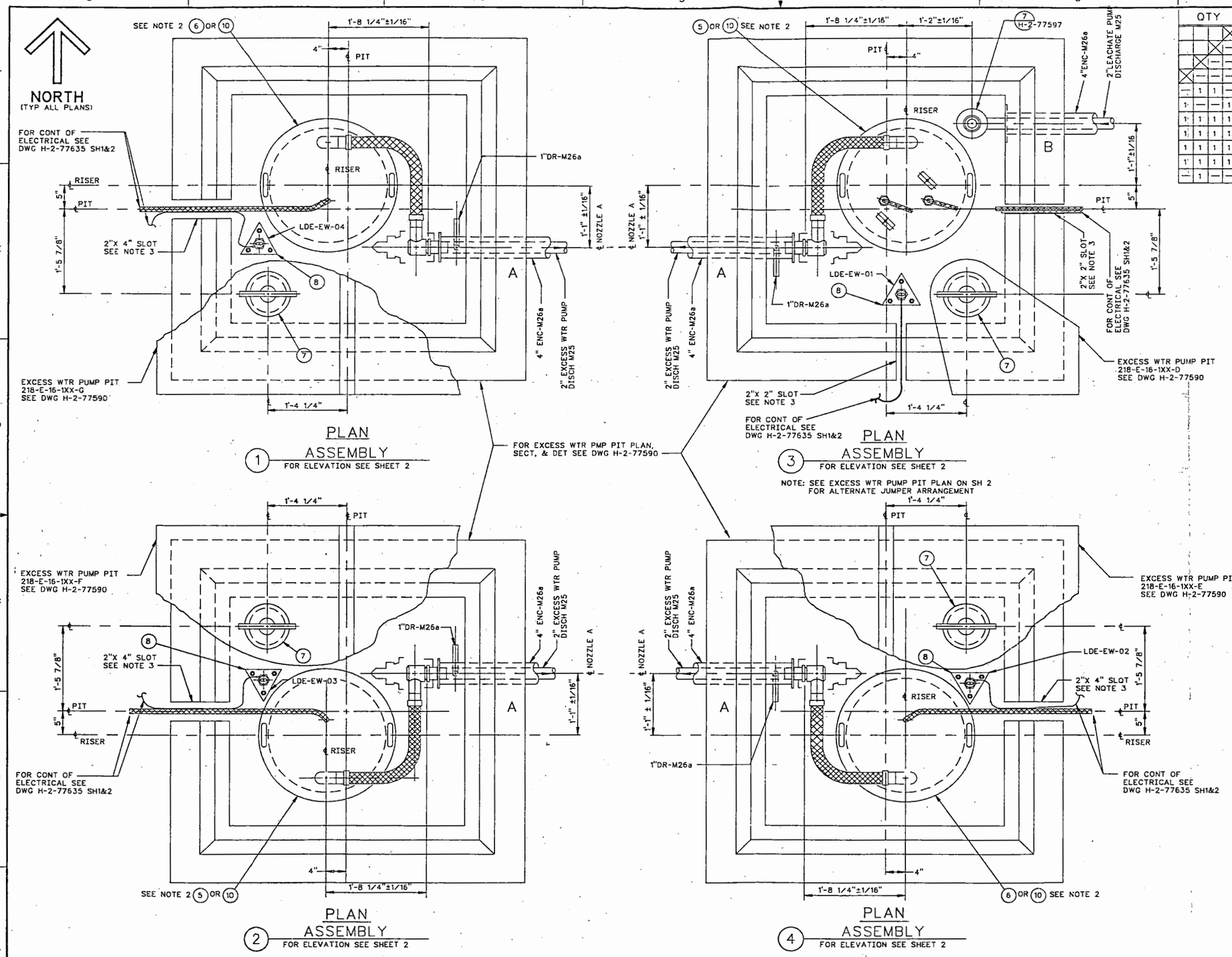

QTY				PN	DESCRIPTION	MATL/REF
			X	1	ASSEMBLY (EXCESS WTR PUMP PIT 218-E-16-1XX-G)	—
		X	—	2	ASSEMBLY (EXCESS WTR PUMP PIT 218-E-16-1XX-F)	—
	X	—	—	3	ASSEMBLY (EXCESS WTR PUMP PIT 218-E-16-1XX-D)	—
X	—	—	—	4	ASSEMBLY (EXCESS WTR PUMP PIT 218-E-16-1XX-E)	—
—	1	1	—	5	EXCESS WATER PUMP ASSY#1 *	H-2-77606-1
1	—	—	1	6	EXCESS WATER PUMP ASSY#2 *	H-2-77606-2
1	1	1	1	7	DRAIN SEAL ASSY#1	H-2-77608-1
1	1	1	1	8	LEAK DETECTOR ASSY *	H-2-34965-1
1	1	1	1	9	FLANGE	ASTM-A36
1	1	1	1	10	PLUG	H-2-77597 DET6
—	1	—	—	11	JUMPER ASSY LEACHATE RECYCLE *	H-2-77603

NOTES:

1. FOR GENERAL NOTES SEE H-2-77596.
2. USE PLUG PN 10 TO FILL 12" RISER WHEN PUMP PN 5 OR PN 6 IS NOT IN PLACE.
3. SEAL CABLE SLOT WITH DUCT SEAL. INSTALL PER MANUFACTURES SPECIFICATIONS.
4. SUBSTITUTE APPROPRIATE VAULT NUMBER IN PLACE OF "XX".
5. (*) ASTERISK INDICATES EQUIPMENT TO BE FURNISHED AND INSTALLED BY OTHERS.
6. SEE H-2-77610 FOR EXCESS WATER PUMP PIT COVER PAINTING DIAGRAMS.

OFFICIAL RELEASE BY WHC
DATE APR 04 1989

EDT # 101089

Rev 0 1-17-89

IMPACT LEVEL 2

WHC APPROVAL BY S.R. BRIGGS	DATE 12-28-88	U.S. DEPARTMENT OF ENERGY RICHLAND OPERATIONS OFFICE	
PROJ ENGR TITLE J.D. SCOTT	1-5-89	KAISER ENGINEERS HANFORD COMPANY	
CH H. HENRIKSON	7-25-1988	PIPING JUMPER ARRGT EXCESS WTR PMP PIT	
APPROVED W.J.M./R.M. ITEN	7-21-1988		
SAFETY J.L.H./A.G. MINISTER	7-21-1988		
APPROVED C.R.Z./J.R. COLLINS	7-19-1988		
DESIGNED L. HALL	7-19-1988	PROJECT TITLE GROUT VAULT PAIR 218-E-16-102&103	
DRAWN D.J. KOLAR	3-18-1988	PROJ B-714	WO ER1060	JOB 242500
DESIGNED D.MILTON	3-29-1988	SCALE 1-1/2"=1'-0"	BLDG 218-E-16	INDEX 0402
CAD FILE B0776G2A		DRAWING NUMBER H-2-77602	SHEET 1	OF 2	REV 0
CAD CODE 28-DEC-ACD2-9.13-NN				

BY-DATE	BY-DATE	REV BY DATE	DESCRIPTION	REV
APPROVAL	KEH APPROVAL			
REVISIONS				
COMMENT REVIEW				

MICROFILMED

NUMBER	TITLE	REFERENCES
DRAWING TRACEABILITY LIST		NEXT USED ON
H-2-77573	DRAWING LIST	

KEHCAD 1 "F" PLT SCF 148

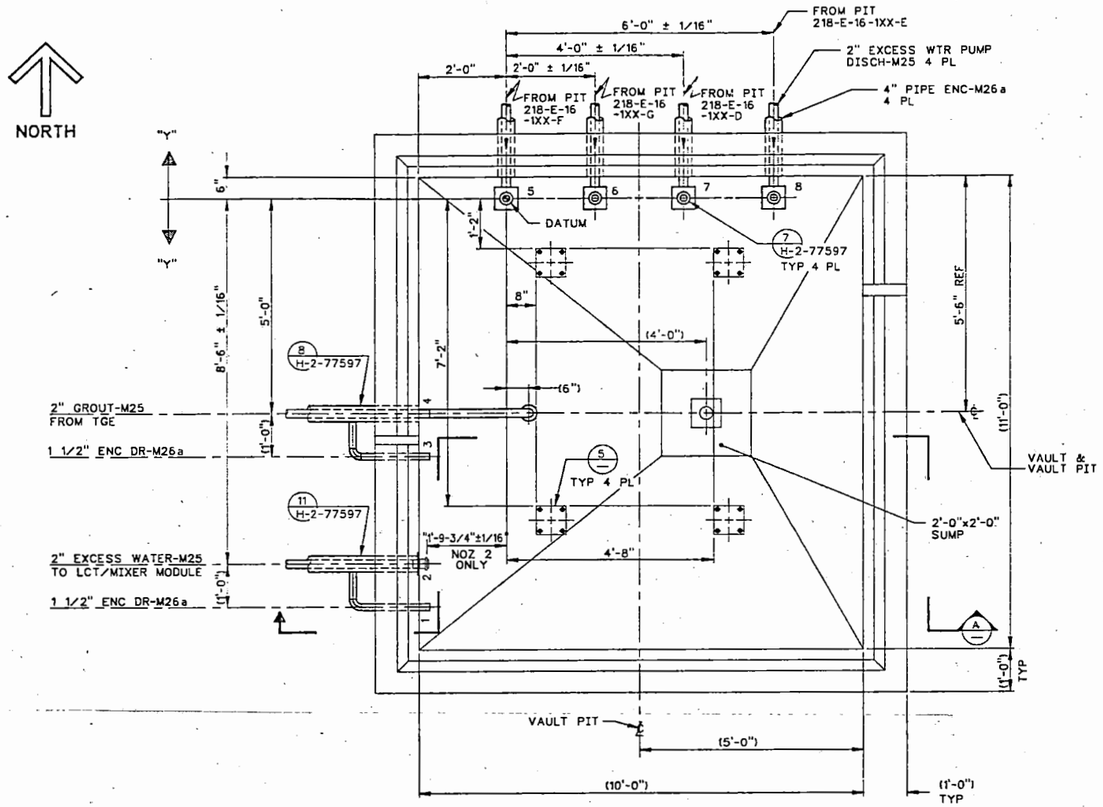

PLAN
VAULT PIT
SCALE:3/4"=1'-0"
SHOWN WITH COVER BLOCKS REMOVED

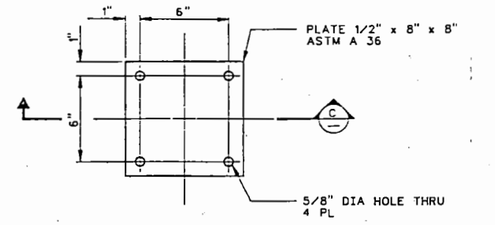

DETAIL 5
SCALE:3"=1'-0"

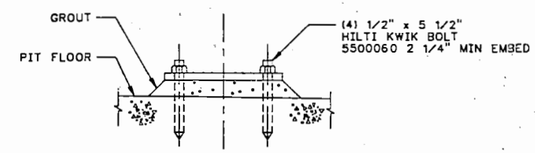

SECTION C
SCALE:3"=1'-0"

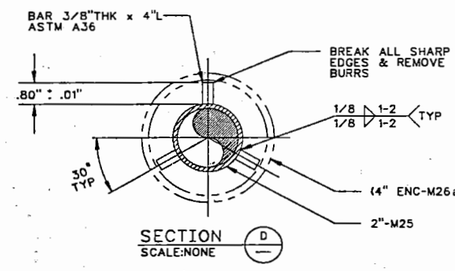

SECTION D
SCALE:NONE

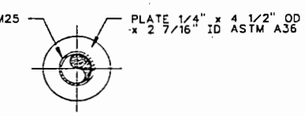

SECTION B
SCALE: 3"=1'-0"

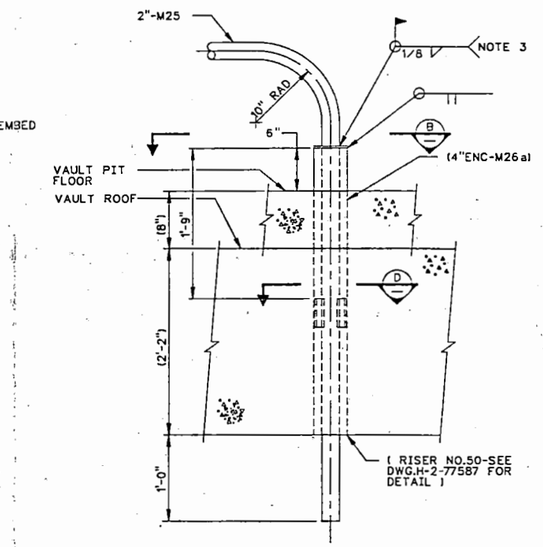

DETAIL 4
SCALE: 1 1/2"=1'-0"

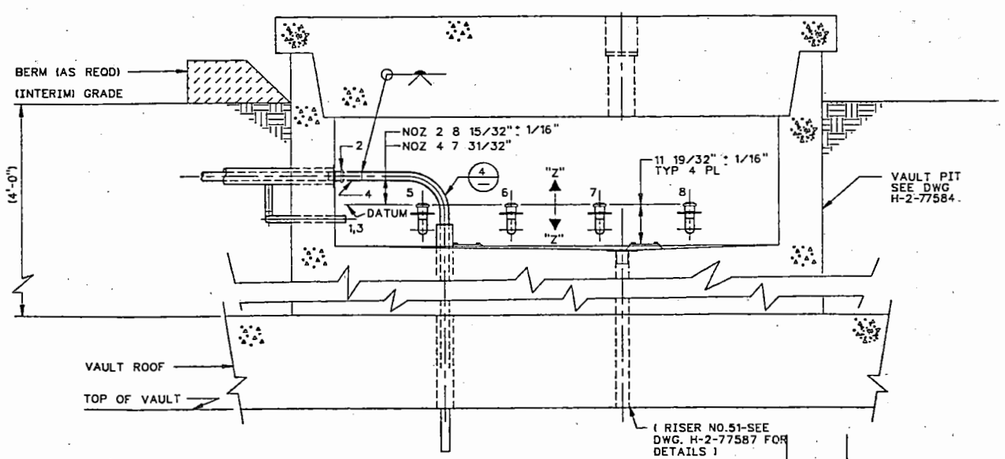

SECTION A
SCALE:3/4"=1'-0"

NOTES:

1. TOLERANCES UNLESS OTHERWISE SPECIFIED SHALL BE FRACTIONAL ± 1/8".
2. FOR CONTINUATION OF PIPING SEE DWG H-2-77596.
3. WELD AFTER PIPE SLOPES HAVE BEEN ESTABLISHED & BACKFILL ACCOMPLISHED.
4. FOR GENERAL NOTES SEE DWG. H-2-77596.

OFFICIAL RELEASE BY WHC DATE APR 04 1989

EDT = 101089

IMPACT LEVEL 2

WHC APPROVAL	DATE	U.S. DEPARTMENT OF ENERGY RICHLAND OPERATIONS OFFICE	
		KAISER ENGINEERS HANFORD COMPANY	
PROJ ENG		PIPING VAULT PIT SECTION & DETAILS	
H.HENRIKSON	7-29-1988		
W.JM/RM ITEN	7-27-1988		
JLH/AG MINISTER	7-21-1988		
CRC/JR COLLINS	7-19-1988		
L.HALL	7-19-1988	PROJECT TITLE: GROUT VAULT PAIR 218-E-16-102&103	
DRAWN BY D.MILTON	1-15-1988	PROJ B-714	JOB 242500
DESIGNED BY D.MILTON	1-15-1988	SCALE SHOWN	BLDG 218-E-16
CAD FILE B077601A			INDEX 0402
CAD DSK 28-DEC-ACD2:9.13-NN		DRAWING NUMBER H-2-77601	SHEET 1 OF 1 REV C

BY-DATE	BY-DATE	REV BY DATE	DESCRIPTION	REV
	KEH APPROVAL			

REVISIONS

COMMENT REVIEW

MICROFILMED

NUMBER	TITLE
H-2-77573	DRAWING LIST

DRAWING TRACEABILITY LIST

NUMBER	TITLE

REFERENCES

NEXT USED ON

~~KEHCAD~~

9 2 5 0 9

9 1 1 1 0 6

LEGEND

- MAIN PROCESS
- FUTURE
- ELECTRICAL
- L — LEAK DETECTION CABLE
- SOFTWARE LINK
- D — DATA COMMUNICATION HIGHWAY
- ENCASED LINE
- CHECK VALVE
- MOTOR OPERATED VALVE (MOV), 3 WAY WITH 3 LIMIT SWITCHES
- MOTOR OPERATED VALVE (MOV), 2 WAY WITH 2 LIMIT SWITCHES
- HOSE CONNECTON
- DRAIN
- FLANGE
- FLEX HOSE
- PIPE REMOTE CONNECTOR
- MC — MOTOR CONTROLLER
- LEVEL ELEMENT
- VACUUM PUMP (PV) OR FAN (F) (AS LABELED)
- EXCESS WATER PUMP (P)
- CCTV CAMERA & LIGHT SOURCE
- LEAK DETECTOR ELEMENT
- TEMPERATURE ELEMENT
- RADIATION ELEMENT
- E/I — VOLTAGE TO CURRENT CONVERTER
- TE — AMBIENT TEMPERATURE ELEMENT
- ▲ SEE NOTE 11
- △ SEE NOTE 12

ABBREVIATIONS OTHER THAN INSTRUMENT SYMBOL LETTERS

ARM	— AREA RADIATION MONITOR
ATM	— ATMOSPHERE
CAM	— CONTINUOUS AIR MONITOR
CASS	— COMPUTER AUTOMATED SURVEILLANCE SYSTEM
E/I	— VOLTAGE TO CURRENT CONVERTER
LCT/MM	— LIQUID COLLECTION TANK/MIXER MODULE
TGE	— TRANSPORTABLE GROUT EQUIPMENT
VEAM	— VAULT EXHAUST AIR MONITOR
PIH	— PORTABLE INSTRUMENT HOUSE
CCTV	— CLOSED CIRCUIT TELEVISION
PLC	— PROGRAMMABLE LOGIC CONTROLLER
EL	— ENCASED LINE
LS	— LEACHATE SUMP
VPS	— VOLTAGE POWER SUPPLY

INSTRUMENT SYMBOL LEGEND

- PLC CRT DISPLAY PORTABLE INSTRUMENT HOUSE (PIH) CONTROL ROOM
- LOCAL MOUNTED INSTRUMENT
- PANEL MOUNTED INSTRUMENT TRANSPORTABLE GROUT EQUIPMENT (TGE) CONTROL ROOM
- PANEL MOUNTED INSTRUMENT, PORTABLE INSTRUMENT HOUSE (PIH) CONTROL ROOM
- PANEL REAR MOUNTED INSTRUMENT, PORTABLE INSTRUMENT HOUSE (PIH) CONTROL ROOM
- PLC CRT DISPLAY, TRANSPORTABLE GROUT EQUIPMENT (TGE) CONTROL ROOM
- 1 — PLC INTERLOCK SCHEDULE SEE SH 2
- 17 — ELECTRICAL INTERLOCK
- PLC HARDWARE INPUT TERMINAL PANEL
- PLC HARDWARE OUTPUT TERMINAL PANEL

INSTRUMENT SYMBOL LETTER IDENTIFICATION CHART

SYMBOL	FIRST LETTER: MEASURED OR INITIATING VARIABLE	FIRST LETTER: MODIFIER	SUCCEEDING LETTERS: READOUT OR PASSIVE FUNTION	SUCCEEDING LETTERS: OUTPUT FUNCTION	SUCCEEDING LETTERS: MODIFIER
A			ALARM		
AN			ANALYZER		
C				CONTROLLER	
D		DETECTION		DRIVER	
E			ELEMENT		
EL		LIGHT SOURCE			
F	FLOW				
H	HAND (MANUALLY INITIATED)				HIGH
I	CURRENT		INDICATOR		
J	POWER				
K			RELAY		
L	LEVEL OR LEAK		LIGHT		LOW
M			MONITOR		
P	PRESSURE				
Q	TROUBLE	TOTALIZE			
R	RADIATION		RECORDER		
S				SWITCH	
SD	SHUTDOWN				
SM	SMOKE				
ST	STATUS				
T	TEMPERATURE			TRANSMITTER	
(1) U	MULTIVARIABLE				
X	TELEVISION	FAILURE			
Y				COMPUTER	
Z	POSITION				

NOTE: NUMBERS IN PARENTHESIS REFER TO SPECIFIC GENERAL NOTES.

P.C. HARDWARE TERMINAL PANEL IDENTIFIER

- FIRST LINE
- SECOND LINE
- THIRD LINE

FIRST LINE

XX XXX
- XXX — IDENTIFICATION NUMBER
- XX — INSTRUMENT IDENTIFICATION LETTERS (SEE LETTER IDENTIFICATION CHART)

SECOND LINE

AI-XXX	ANALOG INPUT
AO-XXX	ANALOG OUTPUT
DI-XXX	DISCRETE INPUT
DO-XXX	DISCRETE OUTPUT

XXX — IO RACK IDENTIFICATION

THIRD LINE

SX-X
- X — CHANNEL NUMBER
- S — SLOT NUMBER

DISCRETE OUTPUT

PLC CRT DISPLAY IDENTIFIER

XXXX XXXX
- XXXX — INSTRUMENT SYMBOL LETTER (FIRST THRU FOURTH CHARACTERS)
- XXXX — INSTRUMENT NUMBER (FIFTH THRU EIGHTH CHARACTERS)

INSTRUMENT IDENTIFIER

XX 1XX-XX
- XX — INSTRUMENT SYMBOL LETTERS
- 1XX-XX — INSTRUMENT NUMBER
- 1 — VAULT NUMBER STARTING WITH 102 (WHERE REQUIRED)

LINE IDENTIFICATION

2"-SN-000-MX
- 2" — LINE SIZE
- SN — SERVICE
- 000 — LINE NUMBER
- M — MATERIAL CODE

ENC — ENCASEMENT
EW — EXCESS WATER
GR — GROUT
RW — RAW WATER
SN — SUPERNATANT

EQUIPMENT DESIGNATOR

VP — VAULT PIT
GV — GROUT VAULT
LP — LEACHATE PIT
P — PUMP

VAULT NUMBERING SEQUENCE

101 — FIRST VAULT
1XX — SUCCEEDING VAULTS STARTING WITH 102

GENERAL NOTES:

1. USE OF FIRST-LETTER U FOR MULTIVARIABLE IN LIEU OF A COMBINATION OF FIRST-LETTERS.
2. ALL NON-MODULATING CONTROL VALVES TO HAVE POSITION LIMIT SWITCHES FOR CRT GRAPHIC AND STATUS INDICATION.
3. CASS ALARMS WILL BE GROUPED AS FOLLOWS:
   - A) ALL LEACHATE SUMP LEAK DETECTORS
   - B) ALL GROUT ENCASED LINE LEAK DETECTORS
   - C) ARM, CAM AND VEAM HIGH RADIATION
   - D) ARM, CAM AND VEAM MONITOR FAILURE & CAM & VEAM SAMPLE LOW FLOW
   - E) ALL VAULT PIT & EXCESS WATER PITS LEAK DETECTORS
   - F) VAULT HIGH & LOW PRESSURE
   - G) ALARM POWER SUPPLY
4. ALL MICROPROCESSOR CRT DISPLAY DATA, INCLUDING PROCESS INDICATIONS, ALARMS AND EQUIPMENT STATUS INDICATIONS, SHALL BE CONFIGURED SUCH THAT ANY COMBINATION OF THESE DATA POINTS MAY BE, AT SCHEDULED INTERVALS OR ON OPERATOR COMMAND, SENT TO THE PRINTER FOR PRODUCTION OF A HISTORICAL RECORD.

   UPON AN ABNORMAL PROCESS CONDITION, ALL RELATED DATA POINTS SHALL AUTOMATICALLY BE SENT TO THE PRINTER FOR PRODUCTION OF HISTORICAL RECORD.
5. ALL PROCESS VARIABLES DESIGNATED AS RECORDERS BY THE SUCCEEDING LETTER "R" (SUCH AS LR-01, FOR EXAMPLE) SHALL, IN ADDITION TO THE VARIOUS STANDARD CRT DISPLAYS, BE CONFIGURED FOR HISTORICAL TRENDING.
6. THE TGE CONTROL ROOM SHALL HAVE PROVISIONS FOR OPERATION OF UP TO THREE PIH'S. THE PIH'S SHALL BE INDENTIFIED BY PIH-1, PIH-2, OR PIH-3.
7. AVERAGE TEMPERATURE IS TO BE CALCULATED ONLY FROM THERMOCOUPLES SUBMERGED BELOW THE EXCESS WATER/GROUT LEVEL. SUBMERGED THERMOCOUPLES SHALL BE DETERMINED BY USE OF SIGNAL INPUT FROM THE EXCESS WATER/GROUT LEVEL ELEMENT.
8. AREA RADIATION MONITOR (ARM) NUMBERING STARTS WITH 02 DUE TO DELETION OF THE NUMBER 01 JUMPER PIT AREA RADIATION MONITOR.
9. THIS IS THE LEACHATE SUMP ARRANGEMENT FOR VAULT 218-E-1XX DURING THE VAULT FILLING SEQUENCE. THIS ARRANGEMENT CONSISTS OF 2 ASSEMBLIES; (1) THE LEACHATE SUMP PUMP ASSEMBLY WITH A HIGH-HIGH LEVEL ELEMENT LE-LS-01 AND PUMP P-LS-01-1. (2) THE LEACHATE SUMP INSTRUMENT TREE ASSEMBLY WITH LEAK DETECTOR LDE-LS-1XX, LEVEL ELEMENT LE-LS-1XX AND TWO THERMOCOUPLES TE-LS-1XX-1 AND TE-LS-1XX-2. (LDE-LS-1XX READOUT WILL BE DISABLED DURING THE FILL SEQUENCE), AND LONG TERM LEACHATE SUMP PUMP P-LS-1XXA AND P-LS-1XXB.
10. THIS IS THE LEACHATE SUMP ARRANGEMENT FOR VAULT 218-E-1XX FOR LONG TERM STORAGE. AFTER THE GROUT IN THE VAULT HAS HARDENED AND THE EXCESS WATER HAS BEEN PUMPED OUT, ASSEMBLY (1) IN NOTE 9 IS REMOVED AND ASSEMBLY (2) IN NOTE 9 REMAINS PERMANENTLY IN PLACE. (LDE-LS-1XX READOUT WILL BE REINSTATED)
11. EQUIPMENT WITH SYMBOL ▲ IS NEW. ALL OTHER EQUIPMENT IS EXISTING.
12. DISPLAY IDENTIFIER NOTED WITH SYMBOL △ SHALL BE RE-IDENTIFIED FROM THE PREVIOUS DISPLAY IDENTIFIER SHOWN.
13. DRAWINGS H-2-77618, SH 1-12 (P&ID'S) ARE FOR INFORMATION OF FLOWS AND PROCESSES. THE REMAINDER OF THE CONSTRUCTION DRAWINGS DELINEATE THE WORK TO BE PERFORMED UNDER THE CONTRACT.
14. SEE DRAWING H-2-98460 FOR CAM DETAILS.

OFFICIAL RELEASE BY WHC
DATE APR 04 1989

3-28-89 REV 0

EDT # 101089

IMPACT LEVEL 2

DRAWING TRACEABILITY LIST		DRAWING LIST	
NUMBER	TITLE	NUMBER	TITLE
H-2-98460	INSTM CONTINUOUS AIR MONITOR	H-2-77573	REFERENCES
		NEXT USED ON H-2-77573	

REVISIONS				
BY-DATE	BY-DATE	REV BY DATE	DESCRIPTION	REV
APPROVAL	KEH APPROVAL			
COMMENT REVIEW				

MICROFILMED

WHC APPROVAL SA BRIGGS	DATE 12-28-1988	U.S. DEPARTMENT OF ENERGY RICHLAND OPERATIONS OFFICE
PROJ ENGR LOU	12-28-1988	KAISER ENGINEERS HANFORD COMPANY
QA MGR (N/A) WH HENRIKSON	12-8-1988	PIPING & INSTM DIAGRAM UNDERGROUND VAULT
APPROVED BY RM ITEN	12-7-1988	
SAFETY AG MINISTER	12-7-1988	
APPROVED BY (N/A) HJS/BJ SUGUITT	12-7-1988	PROJECT TITLE GROUT VAULT PAIR (218-E-16-102 & 103)
CHECKED BY RC SWAN	5-12-1988	PROJ B-714 / WO ER1060 / JOB
DRAWN BY GF MCKEE	3-23-1989	SCALE NONE / BLDG 218-E-16 / FINISH
DESIGNED BY KE WALTERS	3-21-1989	DRAWING NUMBER H-2-77618 / SHEET 1 OF 12 / REV 0

H-2-77618A1
C 01/05/89

INTERLOCK SCHEDULE

1. UPON DETECTION OF A LIQUID LEAK IN THE ENCASED GROUT TRANSPORT LINE, THE FOLLOWING SHALL OCCUR:
   - A) SHUTDOWN AND CIRCUIT DE-ENERGIZATION OF THE GROUT PUMP.
   - B) IF GROUT PUMP WAS IN OPERATION, INITIATION OF THE AUTOMATIC FLUSH/TRANSPORTABLE GROUT EQUIPMENT (TGE) SHUTDOWN SEQUENCE.

2. UPON DETECTION OF LIQUID IN THE VAULT PIT, THE FOLLOWING SHALL OCCUR:
   - A) SHUTDOWN AND CIRCUIT DE-ENERGIZATION OF THE GROUT PUMP AND INITIATION OF THE TGE SHUTDOWN SEQUENCE.
   - B) SHUTDOWN AND CIRCUIT DE-ENERGIZATION OF EXCESS WATER PUMPS P-EW-01, -02, -03, AND -04.

3. UPON DETECTION OF A LIQUID LEAK IN THE LEACHATE PIT THE FOLLOWING SHALL OCCUR:
   - A) SHUTDOWN AND CIRCUIT DE-ENERGIZATION OF THE GROUT PUMP, LEACHATE SUMP PUMP AND EW PUMP.
   - B) IF GROUT PUMP WAS IN OPERATION, INITIATION OF THE AUTOMATIC FLUSH/TRANSPORTABLE GROUT EQUIPMENT (TGE) SHUTDOWN SEQUENCE.

4. UPON DETECTION OF HIGH RADIATION FROM ANY MONITOR OR DETECTION OF HIGH OR LOW VAULT PRESSURE, A RED WARNING LIGHT MOUNTED ON THE PIH SHALL BE ENERGIZED.

5. UPON DETECTION OF A HIGH RADIATION CONDITION BY EITHER
   - 1) THE CONTINUOUS AIR MONITOR (CAM)
   - 2) THE AREA RADIATION MONITOR (ARM)

   THE FOLLOWING SHALL OCCUR:
   - A) SHUTDOWN AND CIRCUIT DE-ENERGIZATION OF THE GROUT PUMP. FOLLOWING A TIME-DELAYED INTERVAL WITHOUT PUMP RESTART, THE AUTOMATIC FLUSH/TGE SHUTDOWN SEQUENCE SHALL BE INITIATED.
   - B) SHUTDOWN AND CIRCUIT DE-ENERGIZATION OF EXGESS WATER PUMPS P-EW-01, -02, -03, AND -04.

6. UPON DETECTION OF EXHAUST AIR HIGH RADIATION CONDITION BY THE FUTURE VAULT EXHAUST AIR MONITOR (VEAM), THE FOLLOWING SHALL OCCUR:
   - A) SHUTDOWN OF THE FUTURE VAULT EXHAUSTER
   - B) SHUTDOWN AND CIRCUIT DE-ENERGIZATION OF THE GROUT PUMP. FOLLOWING A TIME-DELAYED INTERVAL WITHOUT PUMP RESTART, THE AUTOMATIC FLUSH/TGE SHUTDOWN SEQUENCE SHALL BE INITIATED.

7. UPON DETECTION OF VAULT HIGH GROUT LEVEL OR HIGH EXCESS WATER LEVEL, THE FOLLOWING SHALL OCCUR:
   - A) SHUTDOWN AND CIRCUIT DE-ENERGIZATION OF THE GROUT PUMP.
   - B) IF GROUT PUMP WAS IN OPERATION, INITIATION OF THE AUTOMATIC FLUSH/TGE SHUTDOWN SEQUENCE.
   - C) SHUTDOWN OF EXCESS WATER PUMPS P-EW-01, -02, -03 AND -04. PUMP CIRCUITS TO REMAIN ENERGIZED FOR POSSIBLE MANUAL STARTUP.

8. UPON DETECTION OF GROUT HIGH TEMPERATURE, THE FOLLOWING SHALL OCCUR:
   - A) SHUTDOWN AND CIRCUIT DE-ENERGIZATION OF THE GROUT PUMP.
   - B) IF GROUT PUMP WAS IN OPERATION, INITIATION OF THE AUTOMATIC FLUSH/TRANSPORTABLE GROUT EQUIPMENT (TGE) SHUTDOWN SEQUENCE.
   - C) SHUTDOWN AND CIRCUIT DE-ENERGIZATION OF EXCESS WATER PUMPS P-EW-01, -02, -03 AND -04.

9. UPON SHUTDOWN INTERLOCK TRIP FROM TGE, THE FOLLOWING SHALL OCCUR:
   - A) SHUTDOWN AND CIRCUIT DE-ENERGIZATION OF EXCESS WATER PUMPS P-EW-01, -02, -03 AND -04.

10. UPON A HIGH LEVEL INTERLOCK TRIP FROM THE LCT/MM THE FOLLOWING SHALL OCCUR:
    - A) SHUTDOWN AND CIRCUIT DE-ENERGIZATION OF EXCESS WATER PUMPS P-EW-01, -02, -03 AND -04.

11. UPON ACTIVATION OF SUBMERSIBLE PUMP P-EW-03 STARTUP SEQUENCE, VALVES MOV-03 & -06 SHALL BE AUTOMATICALLY OPENED WHILE MOV-01, -02 & -04 ARE AUTOMATICALLY CLOSED. MOV-05 SHALL BE PROPERLY POSITIONED TO PUMP OUT OF THE VAULT. FINALLY THE OPERATOR WILL BE PROMPTED TO START THE PUMP. IF ANY OF THE ABOVE CONDITIONS IS NOT SATISFIED, PUMP OPERATION WILL BE PROHIBITED. PUMPS P-EW-01, 02 & 04 ARE SIMILIAR IN OPERATION.

12. UPON DETECTION OF LIQUID IN AN EXCESS WATER PIT. THE FOLLOWING SHALL OCCUR:
    - A) SHUTDOWN AND CIRCUIT DE-ENERGIZATION OF EXCESS WATER PUMPS P-EW-01, -02, -03 AND -04.

13. UPON DETECTION OF HIGH PRESSURE IN THE VAULT, THE FOLLOWING SHALL OCCUR:
    - A) SHUTDOWN AND CIRCUIT DE-ENERGIZATION OF THE GROUT PUMP. FOLLOWING A TIME-DELAYED INTERVAL WITHOUT PUMP RESTART, THE AUTOMATIC FLUSH/TGE SHUTDOWN SEQUENCE SHALL BE INITIATED.

14. UPON DETECTION OF LOW PRESSURE IN THE VAULT, THE FOLLOWING SHALL OCCUR:
    - A) SHUTDOWN AND CIRCUIT DE-ENERGIZATION OF THE GROUT PUMP AND INITIATION OF THE TGE SHUTDOWN SEQUENCE.
    - B) SHUTDOWN OF VAULT EXHAUST SYSTEM, UNTIL NORMAL OPERATING PRESSURE IS OBTAINED, FOLLOWED BY THE AUTOMATIC RESTART OF THE EXHAUST SYSTEM.

15. UPON DETECTION OF HIGH LIQUID LEVEL IN THE LEACHATE SUMP AS DETECTED BY LE-LS-1XX. WITH THE FOLLOWING CONDITIONS SATISFIED THE LEACHATE PIT SUMP PUMP WILL START:
    - A) THE LEACHATE PIT SUMP PUMP IN THE AUTOMATIC MODE AND MOV-8 IS IN THE "TO VAULT" MODE.

    WHEN THE LIQUID HAS BEEN PUMPED DOWN AND THE LEVEL ELEMENT DETECTS LOW LEVEL THE LEACHATE SUMP PUMP WILL BE DE-ENERGIZED.

16. UPON DETECTION OF HIGH-HIGH LIQUID LEVEL IN THE LEACHATE SUMP, DURING THE VAULT FILLING SEQUENCE, AS DETECTED BY THE LDE, THE FOLLOWING SHALL OCCUR:
    - A) SHUTDOWN AND CIRCUIT DE-ENERGIZATION OF THE GROUT PUMP.
    - B) IF GROUT PUMP WAS IN OPERATION, INITIATION OF THE AUTOMATIC FLUSH/TRANSPORTABLE GROUT EQUIPMENT (TGE) SHUTDOWN SEQUENCE.
    - C) SHUTDOWN OF EXCESS WATER PUMPS P-EW-01, -02, -03 AND -04. PUMP CIRCUITS TO REMAIN ENERGIZED FOR POSSIBLE MANUAL STARTUP AFTER SHUTDOWN.

17. UPON SHUTDOWN OR NON-RUNNING CONDITION OF FUTURE VAULT EXHAUSTER, THE FOLLOWING SHALL OCCUR:
    - A) SHUTDOWN OR DISABLING OF FUTURE VEAM RECORD SAMPLE PUMP PV-06.
    - B) SHUTDOWN AND DE-ENERGIZATION OF THE GROUT PUMP.
    - C) IF GROUT PUMP WAS IN OPERATION, INITATION OF THE AUTOMATIC FLUSH/TRANSPORTABLE GROUT EQUIPMENT (TGE) SHUTDOWN SEQUENCE.

18. EXCESS WATER LOW FLOW ALARM SHALL BE ENABLED ONLY IF ONE OF THE EXCESS WATER PUMPS IS RUNNING.

19. UPON ACTIVATION OF GROUT PUMP PUMPING GROUT TO THE VAULT, A YELLOW WARNING BEACON LIGHT MOUNTED ON THE PIH SHALL BE ENERGIZED.

20. UPON HIGH MOTOR TEMPERATURE, OVERCURRENT OR PUMP MOTOR SEAL LEAK MOTOR SHALL SHUTDOWN. TYPICAL FOR P-EW-01, -02, -03, -04 AND P-LS-01-1.

RADIATION MONITORS ALARM SIGNAL CHARTS

AREA RADIATION MONITOR (ARM, RAN-02)

TERMINAL BOARD NO.	TERM NO.	RADIATION NORM	RADIATION HIGH	OPERATION/PWR NORM	OPERATION/PWR FAIL
TB-B	1	-	-	ON	OFF
	7	ON	OFF	-	-

CONTINUOUS AIR MONITOR (CAM, RAN-03)

CONNECTOR NUMBER	PIN NO.	RADIATION NORM	RADIATION HIGH	OPERATION/PWR NORM	OPERATION/PWR FAIL	SAMPLE FLOW NORM	SAMPLE FLOW LOW
J-CAM-01-5	A	-	-	ON	OFF	-	-
	C	OFF	ON	-	-	-	-
	F	-	-	-	-	OFF	ON

VAULT EXHAUST AIR MONITOR (VEAM (FUTURE), RAN-04, RAN-05 & RECORD SAMPLER)

CONNECTOR NUMBER	PIN NO.	RADN 04 NORM	RADN 04 HIGH	RADN 05 NORM	RADN 05 HIGH	OPNL/PWR 04 NORM	OPNL/PWR 04 FAIL	OPN/PWR 05 NORM	OPN/PWR 05 FAIL	SAMPLE FLOW 04 NORM	SAMPLE FLOW 04 LOW	SAMPLE FLOW 05 NORM	SAMPLE FLOW 05 LOW	SAMPLE FLOW 06 NORM	SAMPLE FLOW 06 LOW	ENCL TEMP NORM	ENCL TEMP H/L
J-VEAM-01-5	A	-	-	-	-	-	-	-	-	-	-	-	-	ON	OFF	-	-
	B	-	-	-	-	-	-	-	-	-	-	ON	OFF	-	-	-	-
	C	-	-	-	-	-	-	-	-	ON	OFF	-	-	-	-	-	-
	D	-	-	ON	OFF	-	-	-	-	-	-	-	-	-	-	-	-
	E	-	-	-	-	-	-	ON	OFF	-	-	-	-	-	-	-	-
	F	ON	OFF	-	-	-	-	-	-	-	-	-	-	-	-	-	-
	G	-	-	-	-	ON	OFF	-	-	-	-	-	-	-	-	-	-
	H	-	-	-	-	-	-	-	-	-	-	-	-	-	-	ON	OFF

NOTE:

FOR GENERAL NOTES AND LEGENDS, SEE SHEET 1.

OFFICIAL RELEASE BY WHC DATE APR 04 1989

JAMES L. SIM, STATE OF WASHINGTON, 14373, REGISTERED PROFESSIONAL ENGINEER — 3-28-89 REV 0

EDT # 101089

IMPACT LEVEL 2

WHC APPROVAL 3/30/89 BY JSR BRAGGS	DATE 12-28 1988	U.S. DEPARTMENT OF ENERGY RICHLAND OPERATIONS OFFICE
		KAISER ENGINEERS HANFORD COMPANY
PROJ ENGR 3/30/89 JOSE CLOUD	12-28 1988	PIPING & INSTM DIAGRAM UNDERGROUND VAULT
SAF. ENGR/ENVIRON WH HENRIKSON	12-8 1988	
APPROVED BY RM ITEN	12-7 1988	
SAFETY AG MINISTER	12-7 1988	
APPROVED WB 12/7/88 BY HJS/C SUSLETT	12-7 1988	PROJECT TITLE GROUT VAULT PAIR (218-E-16-102 & 103)
DESIGNED BY RC SWAN	5-12 1988	PROJ B-714 / SYS ER1060 / JOB ——
DRAWN BY PA SMITH	3-10 1988	SCALE NONE / BLDG 218-E-16 / PROJ [illegible]
DESIGNED KE WALTER	3-10 1988	DRAWING NUMBER H-2-77618 / SHEET 2 / REV 0

BY-DATE	SY-DATE	REV BY DATE	DESCRIPTION	REV
APPROVAL	KEH APPROVAL		REVISIONS	
COMMENT REVIEW				

NUMBER	TITLE	NUMBER	TITLE
			DRAWING LIST
DRAWING TRACEABILITY LIST		NEXT USED ON H-2-77573	REFERENCES

MICROFILMED

SUPERSEDES

H2776.SA2 C 01/05/89

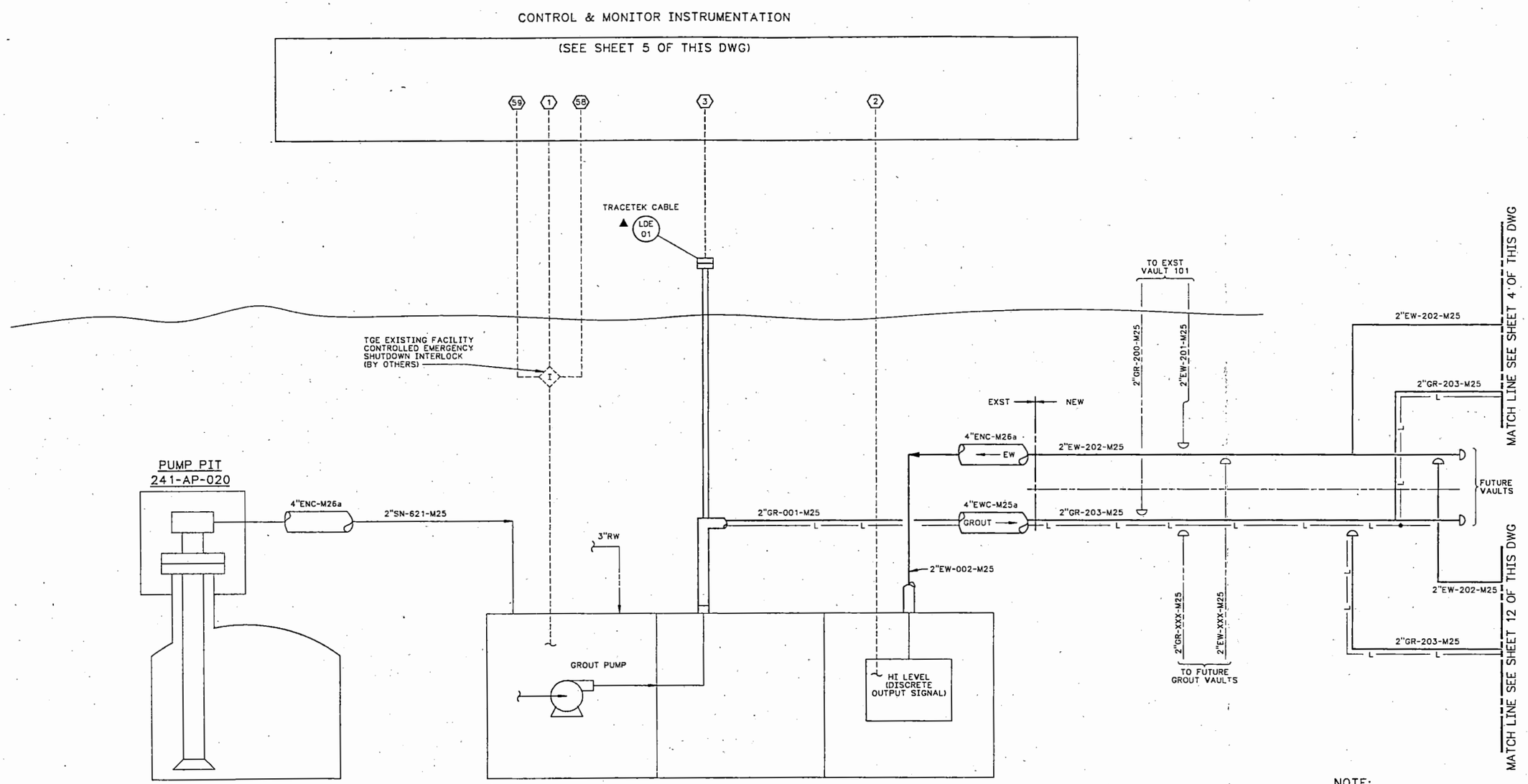

NOTE:
FOR GENERAL NOTES AND LEGENDS, SEE SHEET 1.

OFFICIAL RELEASE BY WHC
DATE APR 04 1989

1-8-89 REV0

EDT # 101089

IMPACT LEVEL 2

WHC	12-28 1988	U.S. DEPARTMENT OF ENERGY RICHLAND OPERATIONS OFFICE
	12-28 1988	KAISER ENGINEERS HANFORD COMPANY
WH HENRIKSON	12-8 1988	PIPING & INSTM DIAGRAM UNDERGROUND VAULT
RM ITEN	12-7 1988	
AG MINISTER	12-7 1988	PROJECT TITLE: GROUT VAULT PAIR (218-E-15-102 & 103)
HJS/JC SUBLETT	12-7 1988	
RC SWAN	5-12 1988	PREV. B-714 · NO. ER1060 · JOB
PA SMITH	3-10 1988	SCALE NONE · BLDG. 218-E-16 · PAGE
KE WALTER	3-10 1988	DRAWING NUMBER H-2-77618 3 12

BY-DATE	BY-DATE	REV BY DATE	DESCRIPTION	REV
APPROVAL	KEH APPROVAL		REVISIONS	
COMMENT REVIEW				

DRAWING LIST

NUMBER	TITLE	REFERENCES

DRAWING TRACEABILITY LIST

NUMBER	TITLE	NEXT USED ON
		H-2-77573

H27 C 01/05/88

9011776034

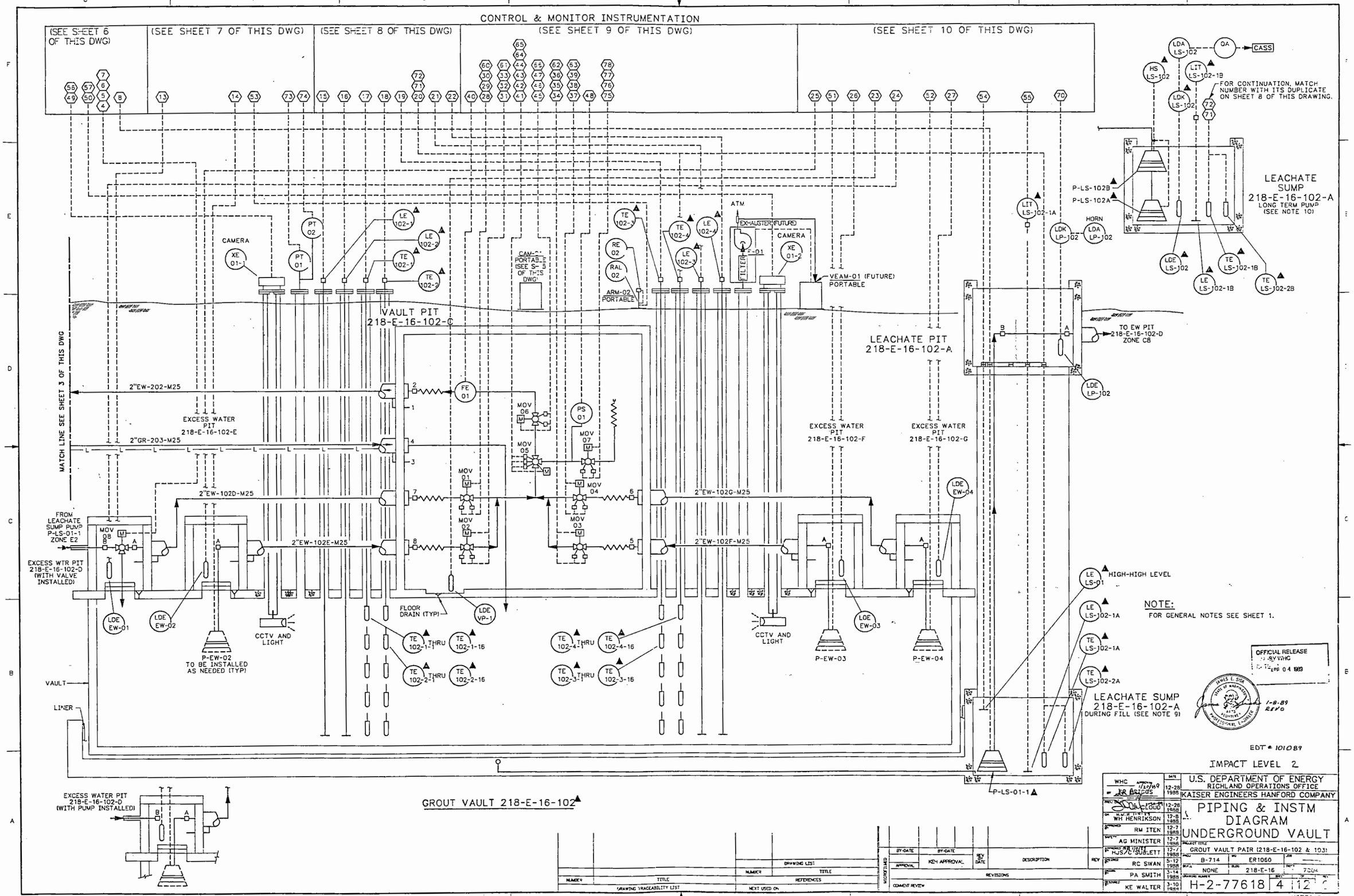
CONTROL & MONITOR INSTRUMENTATION
(SEE SHEET 6 OF THIS DWG)
(SEE SHEET 7 OF THIS DWG)
(SEE SHEET 8 OF THIS DWG)
(SEE SHEET 9 OF THIS DWG)
(SEE SHEET 10 OF THIS DWG)
FOR CONTINUATION, MATCH NUMBER WITH ITS DUPLICATE ON SHEET 8 OF THIS DRAWING.
LEACHATE SUMP 218-E-16-102-A LONG TERM PUMP (SEE NOTE 10)
P-LS-102B
P-LS-102A
LDA LS-102
QA
CASS
HS LS-102
LIT LS-102-1B
LDK LS-102
LDE LS-102
LE LS-102-1B
TE LS-102-1B
TE LS-102-2B
LIT LS-102-1A
LDK LP-102
HORN
LDA LP-102
LDE LP-102
CAMERA
XE 01-1
PT 01
PT 02
LE 102-1
LE 102-2
TE 102-1
TE 102-2
CAM-01 PORTABLE (SEE SHEET 5 OF THIS DWG)
RE 02
RAL 02
ARM-02 PORTABLE
TE 102-3
TE 102-4
LE 102-4
LE 102-3
ATM
EX-ALGSTER (FUTURE)
F-01 FILTER
CAMERA
XE 01-2
VEAM-01 (FUTURE) PORTABLE
VAULT PIT 218-E-16-102-C
LEACHATE PIT 218-E-16-102-A
TO EW PIT 218-E-16-102-D ZONE C8
MATCH LINE SEE SHEET 3 OF THIS DWG
2"EW-202-M25
2"GR-203-M25
EXCESS WATER PIT 218-E-16-102-E
FE 01
MOV 06
MOV 05
PS 01
MOV 07
MOV 01
MOV 04
MOV 02
MOV 03
2"EW-102D-M25
2"EW-102G-M25
2"EW-102E-M25
2"EW-102F-M25
EXCESS WATER PIT 218-E-16-102-F
EXCESS WATER PIT 218-E-16-102-G
LDE EW-04
FROM LEACHATE SUMP PUMP P-LS-01-1 ZONE E2
MOV 08
EXCESS WTR PIT 218-E-16-102-D (WITH VALVE INSTALLED)
LDE EW-01
LDE EW-02
LDE EW-03
P-EW-02 TO BE INSTALLED AS NEEDED (TYP)
CCTV AND LIGHT
FLOOR DRAIN (TYP)
LDE VP-1
TE 102-1-1 THRU
TE 102-1-16
TE 102-2-1 THRU
TE 102-2-16
TE 102-4-1 THRU
TE 102-4-16
TE 102-3-1 THRU
TE 102-3-16
P-EW-03
P-EW-04
P-LS-01-1
LE LS-01 HIGH-HIGH LEVEL
LE LS-102-1A
TE LS-102-1A
TE LS-102-2A
LEACHATE SUMP 218-E-16-102-A DURING FILL (SEE NOTE 9)
VAULT
LINER
EXCESS WATER PIT 218-E-16-102-D (WITH PUMP INSTALLED)
GROUT VAULT 218-E-16-102
NOTE:
FOR GENERAL NOTES SEE SHEET 1.
OFFICIAL RELEASE BY WHC
SEP 04 1989
1-8-89 REV 0
EDT # 101089
IMPACT LEVEL 2
U.S. DEPARTMENT OF ENERGY
RICHLAND OPERATIONS OFFICE
KAISER ENGINEERS HANFORD COMPANY
PIPING & INSTM DIAGRAM
UNDERGROUND VAULT
GROUT VAULT PAIR (218-E-16-102 & 103)
B-714
ER1060
NONE
218-E-16
7204
H-2-77618
4
12
WHC
12-28 1988
WH HENRIKSON
12-8 1988
RM ITEN
12-7 1988
AG MINISTER
12-7 1988
HJS/CSUDLETT
12-7 1988
RC SWAN
5-12 1988
PA SMITH
3-14 1988
KE WALTER
3-10 1989
DRAWING LIST
NUMBER
TITLE
REFERENCES
NEXT USED ON
DRAWING TRACEABILITY LIST
BY-DATE
KEN APPROVAL
DESCRIPTION
REVISIONS
COMMENT REVIEW
MICROFILMED
H2776182A
01/05/89

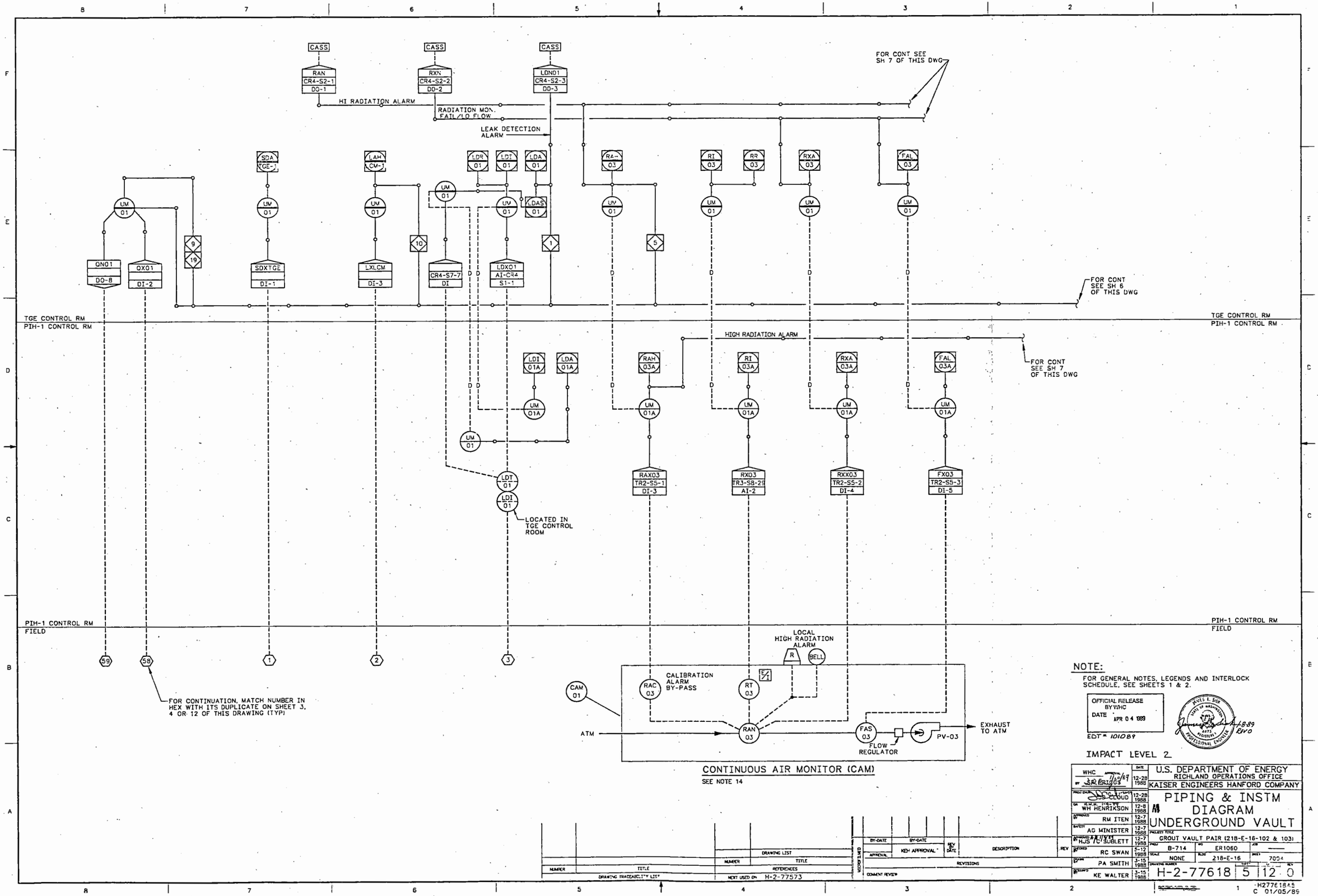

NOTE:

FOR GENERAL NOTES, LEGENDS AND INTERLOCK SCHEDULE, SEE SHEETS 1 & 2.

OFFICIAL RELEASE BY WHC DATE APR 04 1989

EDT# 101089

IMPACT LEVEL 2

WHC	12-28-1988	U.S. DEPARTMENT OF ENERGY RICHLAND OPERATIONS OFFICE
		KAISER ENGINEERS HANFORD COMPANY
	12-28-1988	PIPING & INSTM DIAGRAM
WH HENRIKSON	12-8-1988	
RM ITEN	12-7-1988	UNDERGROUND VAULT
AG MINISTER	12-7-1988	
HJS / JC SUBLETT	12-7-1988	GROUT VAULT PAIR (218-E-16-102 & 103)
RC SWAN	5-12-1988	PROJ B-714 · WO ER1060 · JOB —
PA SMITH	3-15-1988	SCALE NONE · BLDG 218-E-16 · SHEET 7004
KE WALTER	3-15-1988	DRAWING NUMBER H-2-77618 · SHEET 5 · REV 0

BY-DATE	BY-DATE	REV BY DATE	DESCRIPTION	REV
APPROVAL	KEH APPROVAL			

REVISIONS

COMMENT REVIEW

DRAWING LIST

NUMBER	TITLE

REFERENCES

NEXT USED ON H-2-77573

DRAWING TRACEABILITY LIST

H277618A5 C 01/05/89

9011106 3425 09

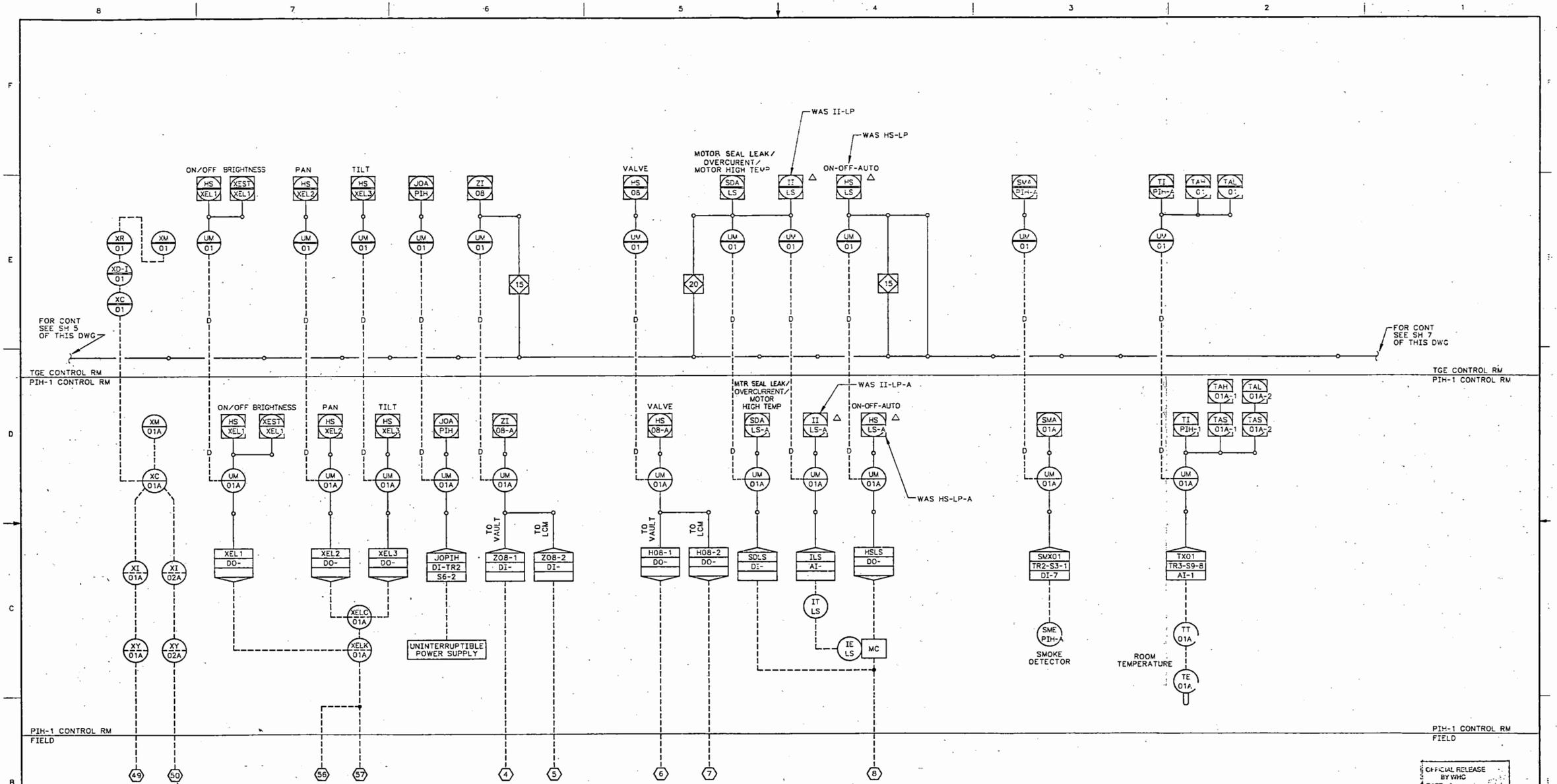

OFFICIAL RELEASE BY WHC DATE APR 04 1989

NOTE:
FOR GENERAL NOTES, LEGENDS AND INTERLOCK SCHEDULE, SEE SHEET 1 & 2.

EDT = 101089

IMPACT LEVEL 2

REV 0

WHC	DATE 12-28 1988	U.S. DEPARTMENT OF ENERGY RICHLAND OPERATIONS OFFICE	
		KAISER ENGINEERS HANFORD COMPANY	
PROJ ENGR WH HENRIKSON	12-28 1988 / 12-8 1988	M PIPING & INSTM DIAGRAM UNDERGROUND VAULT	
APPROVED RM ITEN	12-7 1988		
SAFETY AG MINISTER	12-7 1988		
APPROVED HJS / G SUBLETT	12-7 1988	PROJECT TITLE GROUT VAULT PAIR (218-E-16-102 & 103)	
DESIGNED RC SWAN	5-17 1988	PROJ B-714 / NO ER1060 / JOP	
DRAWN PA SMITH	3-15 1988	SCALE NONE / BLDG 218-E-16 / AREA	
DESIGNED KE WALTER	3-15 1988	DRAWING NUMBER H-2-77618 / SHEET 6 / 12	

BY-DATE	BY-DATE	REV DATE	DESCRIPTION	REV
APPROVAL	KEH APPROVAL			
REVISIONS				
COMMENT REVIEW				

NUMBER	TITLE	NUMBER	TITLE
DRAWING TRACEABILITY LIST		REFERENCES	
		NEXT USED ON	H-2-77573

H2-77618 C 01/05/8-

9011106 A

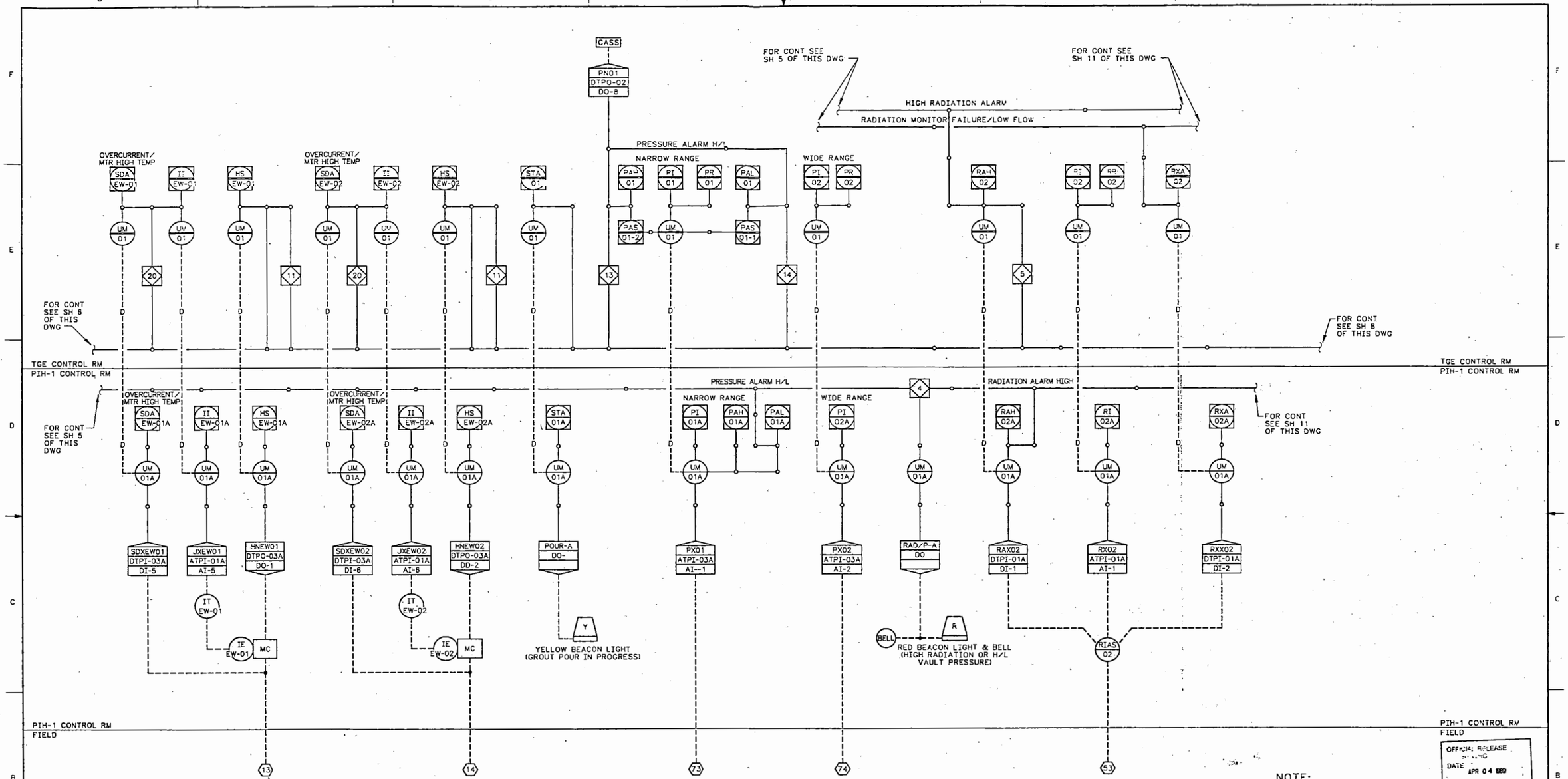

OFFICIAL RELEASE
DATE APR 04 1989

NOTE:

FOR GENERAL NOTES, LEGENDS AND INTERLOCK SCHEDULE, SEE SHEETS 1 & 2.

EDT = 101089

IMPACT LEVEL 2

WHC	12-28 1988	U.S. DEPARTMENT OF ENERGY RICHLAND OPERATIONS OFFICE
		KAISER ENGINEERS HANFORD COMPANY
WH HENRIKSON	12-8 1988	PIPING & INSTM DIAGRAM UNDERGROUND VAULT
RM ITEN	12-7 1988	
AG WINISTER	12-7 1988	
HJS FC/SUBLETT	12-7 1988	GROUT VAULT PAIR (218-E-16-102 & 103)
RC SWAN	5-17 1988	B-714 / ER1060
TA SMITH	3-15 1988	NONE / 218-E-16
KE WALTER	3-15 1988	H-2-77618

DRAWING LIST

NUMBER	TITLE

DRAWING TRACEABILITY LIST

NUMBER	TITLE	REFERENCES
		NEXT USED ON H-2-77573

BY-DATE	BY-DATE	REV	DESCRIPTION	REV
APPROVAL	KEH APPROVAL	DATE	REVISIONS	
COMMENT REVIEW				

WORKSHEET

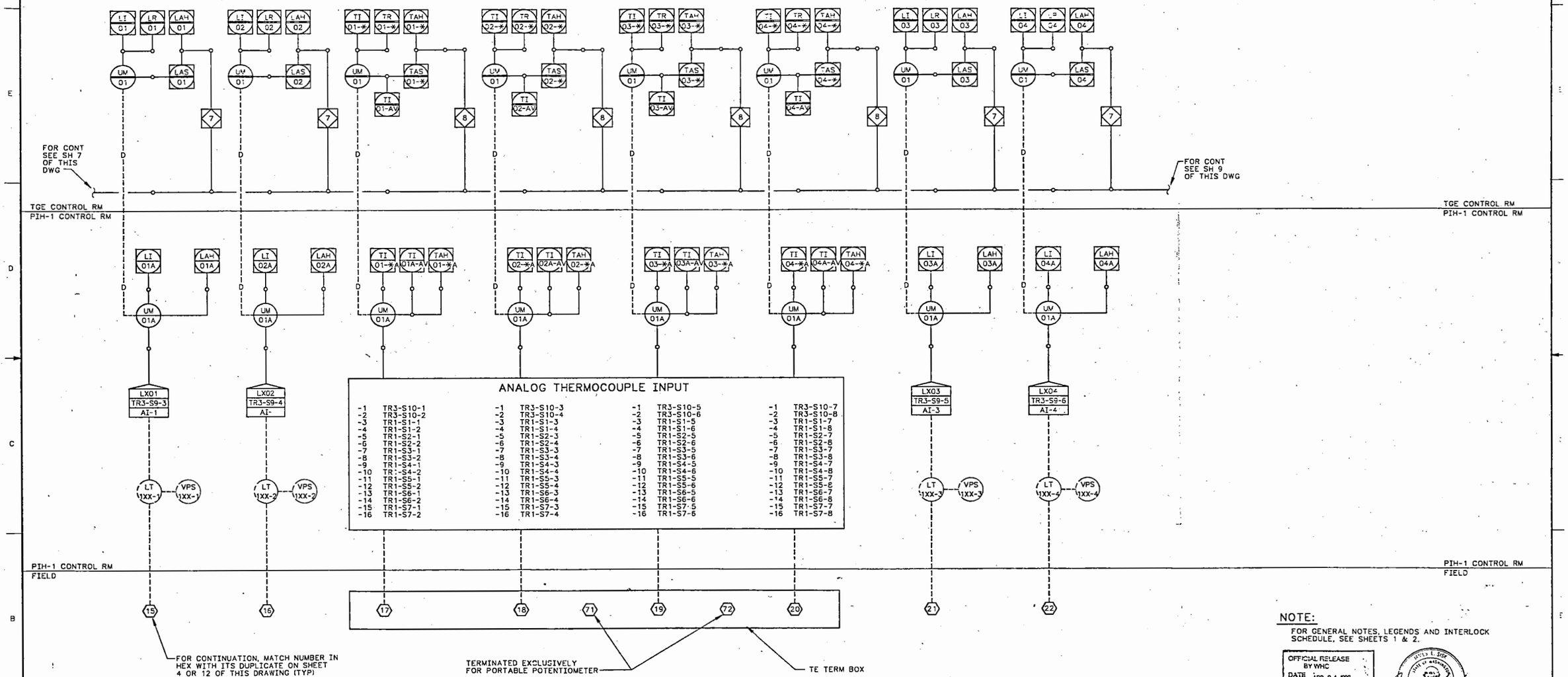

ASTERISK (*) USED IN LIEU OF THERMOCOUPLE NUMBER (1 THRU 16). FOR EXAMPLE: TC #12 ON TI01-* BECOMES TI01-12

NOTE:

FOR GENERAL NOTES, LEGENDS AND INTERLOCK SCHEDULE, SEE SHEETS 1 & 2.

OFFICIAL RELEASE BY WHC
DATE APR 04 1989
EDT # 101089

1-8-89 REVD

IMPACT LEVEL 2

WHC	DATE 12-28 1988	U.S. DEPARTMENT OF ENERGY RICHLAND OPERATIONS OFFICE
		KAISER ENGINEERS HANFORD COMPANY
PREP DRAF SD CLOUD	12-28 1988	PIPING & INSTM DIAGRAM UNDERGROUND VAULT
DR WH HENRIKSON	12-8 1988	
APPROVED BY RM ITEN	12-7 1988	
SAFETY AG MINISTER	12-7 1988	
APPROVED BY HJS KISUSLETT	12-7 1988	PROJECT TITLE GROUT VAULT PAIR (218-E-16-102 & 103)
DESIGNED RC SWAN	5-17 1986	PREV B-714 WO ER1060 JOB
DRAWN FA SMITH	3-15 1986	SCALE NONE BLDG 218-E-16 AREA
DESIGNED KE WALTER	3-15 1988	DRAWING NUMBER H-2-77618 SHEET 8 12

NUMBER	TITLE	DRAWING LIST NUMBER	TITLE
DRAWING TRACEABILITY LIST		REFERENCES	
		NEXT USED ON H-2-77573	

BY-DATE	BY-DATE	REV	DESCRIPTION
APPROVAL	KEH APPROVAL	REV BY DATE	
COMMENT REVIEW		REVISIONS	

77603 46

77110 6

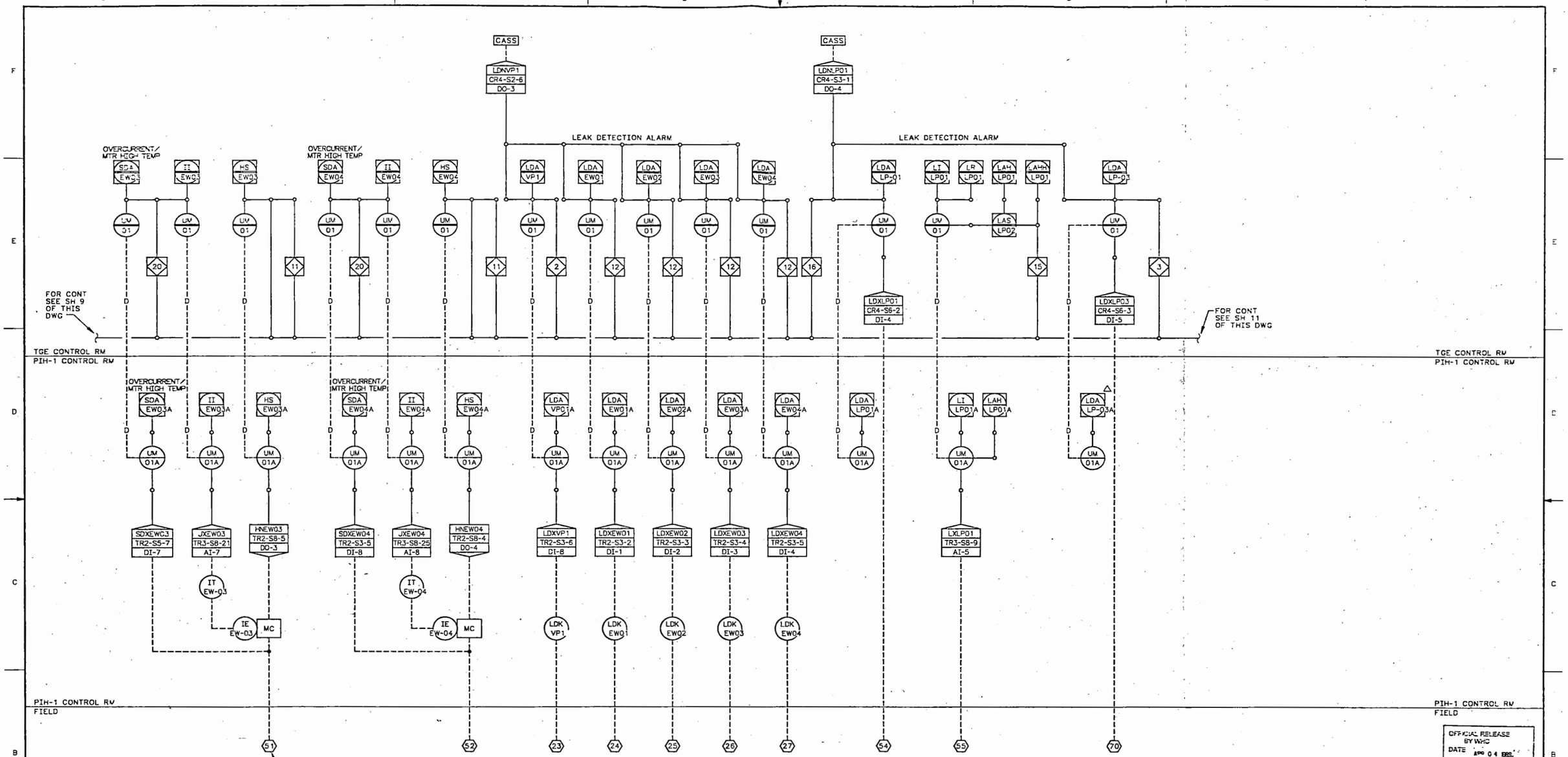

OFFICIAL RELEASE BY WHC
DATE APR 04 1989

NOTE:

FOR GENERAL NOTES, LEGENDS AND INTERLOCK SCHEDULE, SEE SHEETS 1 & 2.

1-8-89
Rev 0

EDT # 101089

IMPACT LEVEL 2

WHC	DATE 12-26 1988	U.S. DEPARTMENT OF ENERGY RICHLAND OPERATIONS OFFICE
	12-28 1988	KAISER ENGINEERS HANFORD COMPANY
WH HENRIKSON	12-8 1988	PIPING & INSTM DIAGRAM UNDERGROUND VAULT
RM ITEN	12-7 1988	
AG MINISTER	12-7 1988	
HJS ZUBLETT	12-7 1988	GROUT VAULT PAIR (218-E-16-102 & -103)
RC SWAN	5-17 1988	B-714 / ER1060
PA SMITH	3-15 1988	NONE / 218-E-16
KE WALTER	3-15 1988	H-2-77618 / 10 12

NUMBER	TITLE	REFERENCES
DRAWING TRACEABILITY LIST		NEXT USED ON H-2-77573

BY-DATE	BY-DATE	REV BY DATE	DESCRIPTION	REV
APPROVAL	KEH APPROVAL		REVISIONS	
COMMENT REVIEW				

C 01/05/89

9011176

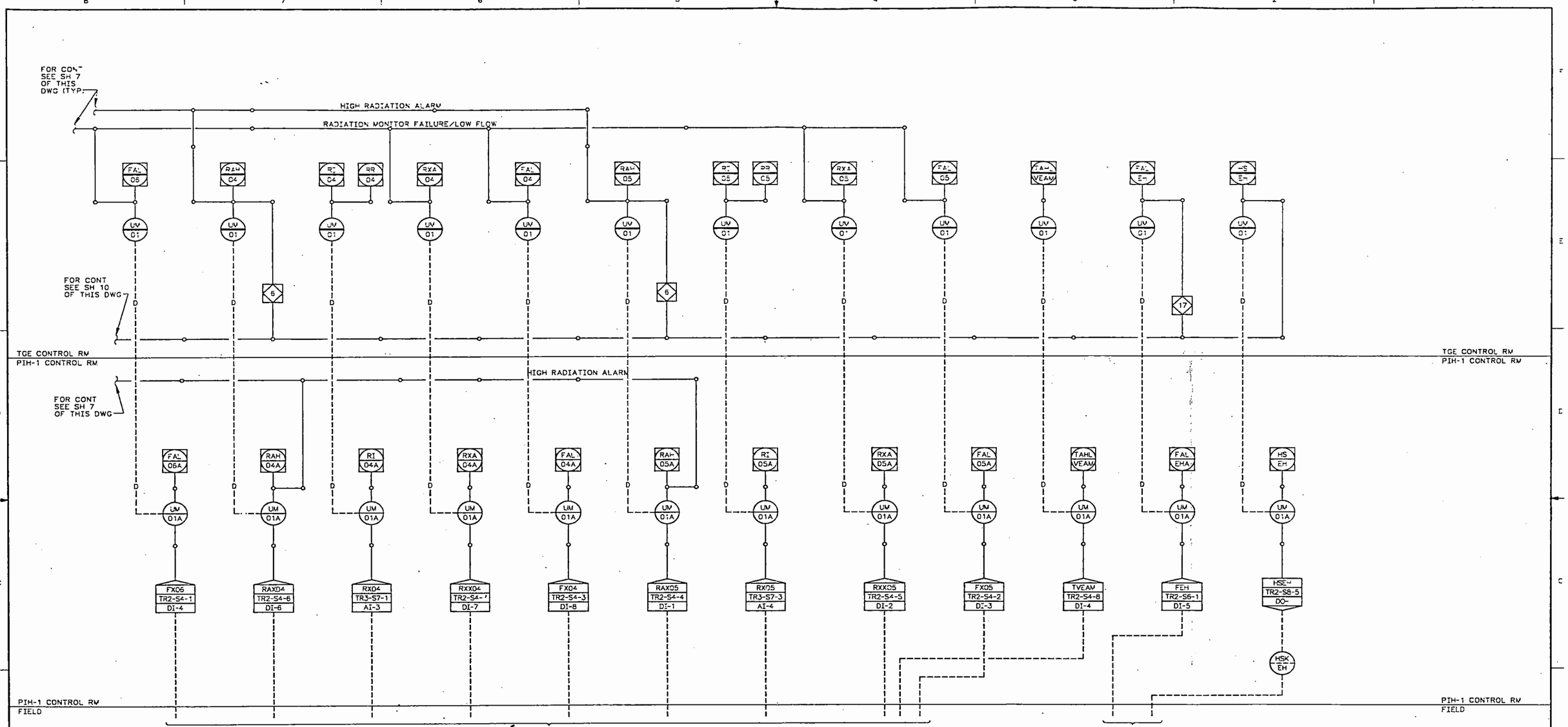

OFFICIAL RELEASE BY WHC
DATE APR 04 1989

NOTE:

FOR GENERAL NOTES, LEGENDS AND INTERLOCK SCHEDULE, SEE SHEETS 1 & 2.

EDT # 101089

1-8-89 REV 0

IMPACT LEVEL 2

WHC	12-29-1988	U.S. DEPARTMENT OF ENERGY RICHLAND OPERATIONS OFFICE
		KAISER ENGINEERS HANFORD COMPANY
	12-26-1988	PIPING & INSTM DIAGRAM UNDERGROUND VAULT
WH HENRIKSON	12-8-1988	
RM ITEN	12-7-1988	
AG WINISTER	12-7-1988	
HJS "C" SUBLETT	12-7-1988	PROJECT TITLE: GROUT VAULT PAIR (218-E-16-102 & -103)
RC SWAN	5-17-1988	B-714 / ER1080
BM BURNSIDE	3-23-1988	SCALE: NONE / 218-E-16
KE WALTER	3-15-1988	DRAWING NUMBER: H-2-77618 11 12

NUMBER	TITLE	NUMBER	TITLE
DRAWING TRACEABILITY LIST		DRAWING LIST REFERENCES	
		NEXT USED ON	H-2-77573

BY-DATE	BY-DATE	REV	DESCRIPTION	REV
APPROVAL	KEH APPROVAL	REV DATE	REVISIONS	
COMMENT REVIEW				

H2776131

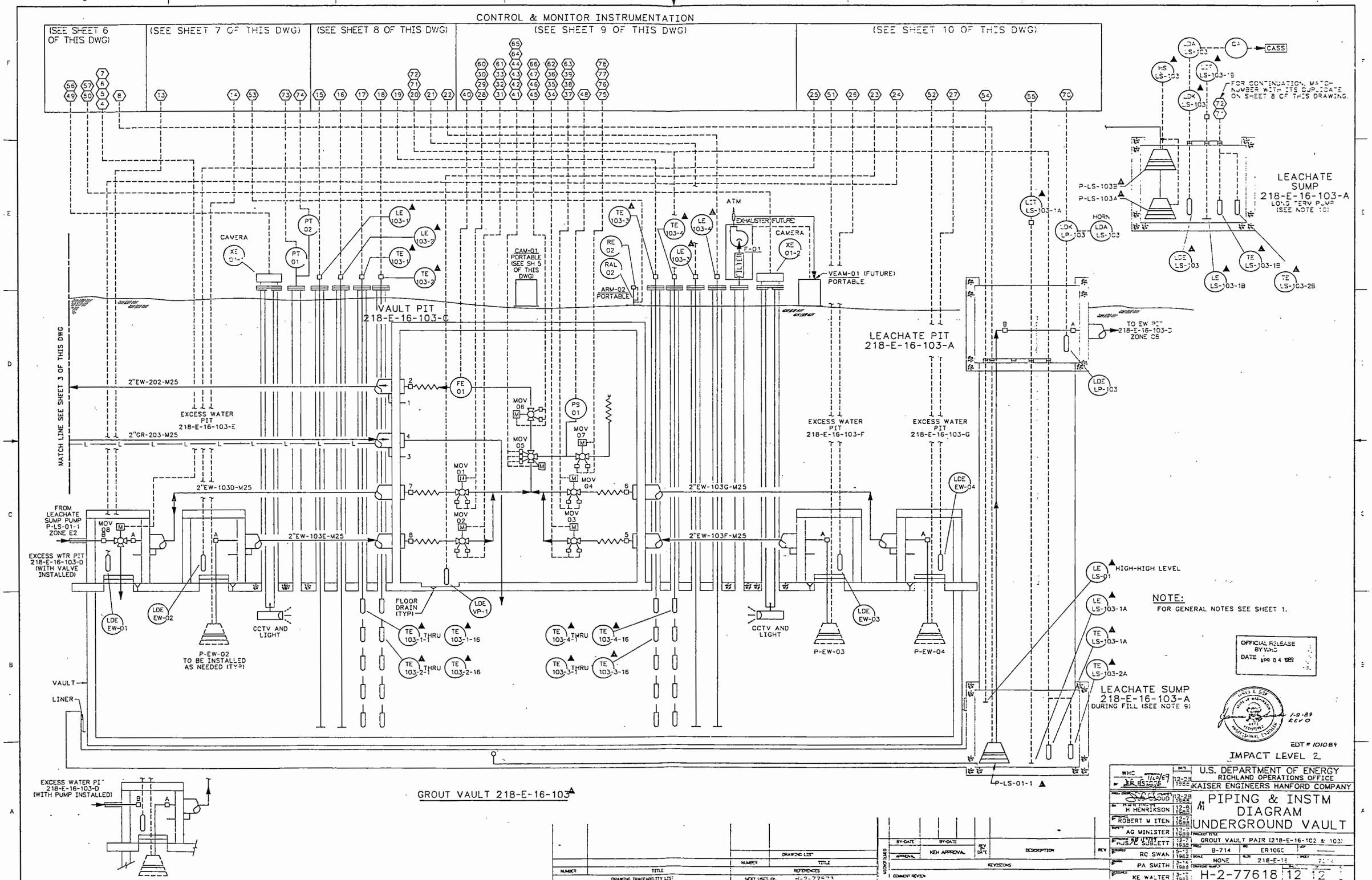
CONTROL & MONITOR INSTRUMENTATION
(SEE SHEET 6 OF THIS DWG)
(SEE SHEET 7 OF THIS DWG)
(SEE SHEET 8 OF THIS DWG)
(SEE SHEET 9 OF THIS DWG)
(SEE SHEET 10 OF THIS DWG)
CAMERA
XE 01-1
PT 01
PT 02
LE 103-1
LE 103-2
TE 103-1
TE 103-2
CAM-01 PORTABLE (SEE SH 5 OF THIS DWG)
RE 02
RAL 02
ARM-02 PORTABLE
TE 103-3
TE 103-4
LE 103-3
LE 103-4
ATM
EXHAUSTER FUTURE
FILTER
F-01
CAMERA
XE 01-2
VEAM-01 (FUTURE) PORTABLE
VAULT PIT 218-E-16-103-C
MATCH LINE SEE SHEET 3 OF THIS DWG
2"EW-202-M25
FE 01
EXCESS WATER PIT 218-E-16-103-E
2"GR-203-M25
MOV 06
MOV 05
PS 01
MOV 07
MOV 04
MOV 01
MOV 02
MOV 03
2"EW-103D-M25
2"EW-103G-M25
2"EW-103E-M25
2"EW-103F-M25
FROM LEACHATE SUMP PUMP P-LS-01-1 ZONE E2
MOV 08
EXCESS WTR PIT 218-E-16-103-D (WITH VALVE INSTALLED)
LDE EW-01
LDE EW-02
P-EW-02 TO BE INSTALLED AS NEEDED (TYP)
CCTV AND LIGHT
FLOOR DRAIN (TYP)
LDE VP-1
TE 103-1-1 THRU
TE 103-1-16
TE 103-2-1 THRU
TE 103-2-16
TE 103-4-1 THRU
TE 103-4-16
TE 103-3-1 THRU
TE 103-3-16
VAULT
LINER
EXCESS WATER PIT 218-E-16-103-F
EXCESS WATER PIT 218-E-16-103-G
LDE EW-04
LDE EW-03
P-EW-03
P-EW-04
CCTV AND LIGHT
LEACHATE PIT 218-E-16-103-A
TO EW PIT 218-E-16-103-D ZONE C5
LDE LP-103
LDK LP-103
LIT LS-103-1A
LDA LS-103
HORN
LDA LS-103
HS LS-103
LIT LS-103-1B
LDK LS-103
CA
CASS
FOR CONTINUATION, MATCH NUMBER WITH ITS DUPLICATE ON SHEET 8 OF THIS DRAWING.
P-LS-103B
P-LS-103A
LEACHATE SUMP 218-E-16-103-A LONG TERM PUMP (SEE NOTE 10)
LDE LS-103
LE LS-103-1B
TE LS-103-1B
TE LS-103-2B
LE LS-01 HIGH-HIGH LEVEL
LE LS-103-1A
TE LS-103-1A
TE LS-103-2A
LEACHATE SUMP 218-E-16-103-A DURING FILL (SEE NOTE 9)
P-LS-01-1
EXCESS WATER PIT 218-E-16-103-D (WITH PUMP INSTALLED)
GROUT VAULT 218-E-16-103
NOTE:
FOR GENERAL NOTES SEE SHEET 1.
OFFICIAL RELEASE BY WHC
DATE DEC 04 1989
1-9-89
EDT # 101089
IMPACT LEVEL 2
WHC
ER 85-025
U.S. DEPARTMENT OF ENERGY
RICHLAND OPERATIONS OFFICE
KAISER ENGINEERS HANFORD COMPANY
PIPING & INSTM DIAGRAM
UNDERGROUND VAULT
H HENRIKSON
ROBERT M ITEN
AG MINISTER
HJ/JC SUBLETT
RC SWAN
PA SMITH
KE WALTER
GROUT VAULT PAIR (218-E-16-102 & 103)
B-714
ER106C
NONE
218-E-16
H-2-77618
12 12
DRAWING LIST
DRAWING TRACEABILITY LIST
REVISIONS
DESCRIPTION
KEH APPROVAL

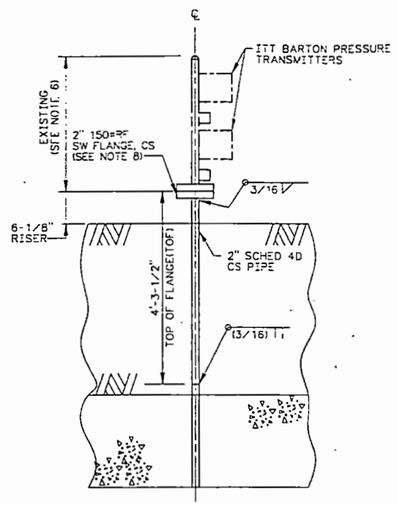

DETAIL 1
SCALE: 3/4"=1'-0"
VAULT PRESSURE TRANSMITTER PENETRATION RISER

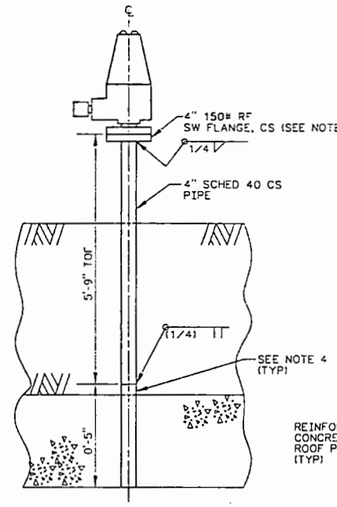

DETAIL 2
SCALE: 3/4"=1'-0"
LEVEL PROBE PENETRATION RISER

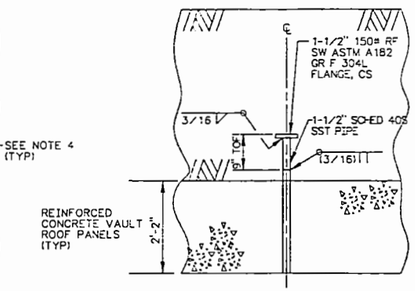

DETAIL 3
SCALE: 3/4"=1'-0"
THERMOCOUPLE PROBE PENETRATION RISER
SEE NOTE 3

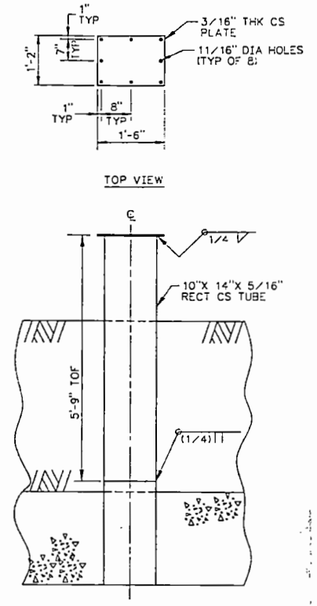

DETAIL 4
SCALE: 3/4"=1'-0"
TELEVISION CAMERA PENETRATION RISER

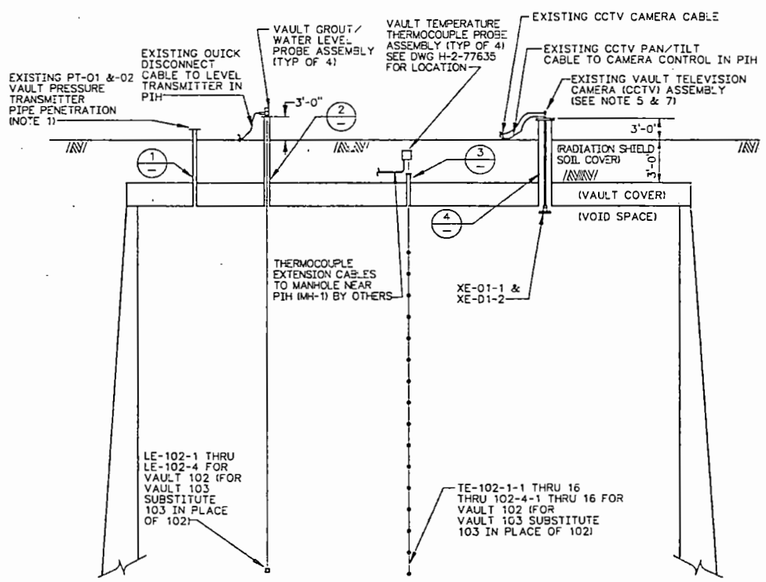

VAULT SECTION A
SCALE: 3/16"=1'-0" H-2-77635
SEE NOTE 2

NOTES:

1. VAULT PRESSURE TRANSMITTER PENETRATION LOCATION AS SHOWN IS OFFSET. ACTUAL LOCATION IN THIS VIEW WOULD BE DIRECTLY BEHIND VAULT GROUT/WATER LEVEL PROBE.
2. FOR PLAN VIEW SHOWING INSTRUMENT LOCATIONS SEE DRAWING H-2-77635.
3. SEE DRAWING H-2-77620, SH 2 FOR INSTALLATION DETAILS.
4. THREE INCH LONG PIPE RISER STUB PROVIDED BY VAULT ROOF PANEL FABRICATOR.
5. CCTV CAMERA ASSEMBLY, PAN/TILT UNIT AND CABLES WITH BULKHEAD CONNECTORS ARE EXISTING. SEE DWG H-2-96584 FOR VENDOR INFORMATION.
6. RELOCATE (BY OTHERS) FROM VAULT 218-E-16-101 AND BOLT TO RISER FLANGE USING (4) 5/8"-11UNC-2A X 2 1/2" LONG HEAVY HEX BOLTS WITH 5/8"-11UNC-2B HEAVY HEX NUT.
7. SET PAN/TILT LIMITS AS FOLLOWS FOR SIDE MOUNTED UNIT:
   A. SET TILT UP LIMIT TO 10°MAX (VERY IMPORTANT LIMIT)
   B. SET TILT DOWN LIMIT TO 90°
   C. SET PAN CW & CCW LIMITS TO 359°AND 1°.
8. BOLT LEVEL PROBE ASSY TO RISER USING (8) 5/8"-11UNC-2A X 3" L HEAVY HEX BOLTS WITH 5/8"-11UNC-2B HEAVY HEX NUT.
9. ALL DIMENSIONS ARE NOMINAL (±3/16").
10. PROVIDE A SPACER ASSEMBLY EVERY 1 FOOT BETWEEN FLANGE AND WEIGHT STEM.
11. ATTACH #14 STRANDED BARE COPPER GROUND WIRE WITH RING TONGUE CRIMP CONNECTOR. ATTACH AS SHOWN AND WITH SPACER, SEE DETAIL 6. CLAMP TO WEIGHT AS SHOWN.
12. THE 4 LEVEL SENSING ELEMENTS PER VAULT SHALL BE DREXELBROOK ENGINEERING CO M-700-9000-479. IT SHALL HAVE AN ACTIVE PROBE LENGTH OF 33'-9" WITH A TOTAL PROBE INSERTION LENGTH OF 42'-2". IT SHALL HAVE AN 8-2" 304SS INACTIVE SECTION. THE WEIGHT SHALL BE A 752-287-4 MADE OF 316 SS. IT SHALL BE ASSEMBLED AS SHOWN ON SH 2 WITH A GROUND WIRE AND STAND-OFFS. IT SHALL INTERFACE WITH EXISTING DREXELBROOK TRANSMITTER, POWER SUPPLY AND CABLE ALSO FOUND ON ABOVE P.O. EACH OF THE 4 LEVEL SENSORS SHALL BE CONSTRUCTED AND TAGGED PER LEVEL ASSEMBLY ON SHEET 2.
13. ATTACH A 4"L X 3.96" DIA LEAD DONUT TO THE FLANGE AS SHOWN.

OFFICIAL RELEASE BY WHC

1-8-89 REV 0

EDT = 101069

IMPACT LEVEL 3

WHC APPROVAL	DATE 12-28-1988	U.S. DEPARTMENT OF ENERGY RICHLAND OPERATIONS OFFICE	
		KAISER ENGINEERS HANFORD COMPANY	
PROJ ENGR	12-28-1988	INSTM VAULT MTD INSTM INSTL DETAILS	
QA PROJECT ENGR H HENRIKSON	12-8-1988		
APPROVED BY ROBERT M ITEN	12-7-1988		
SAFETY AG MINISTER	12-7-1988		
APPROVED BY HWS/JJ SUBLETT	12-7-1988	PROJECT TITLE GROUT VAULT PAIR (218-E-16-102 & 103)	
CHECKED BY JES/RC SWAN	5-18-1988	PROJ B-714	WO ER1060
DRAWN BY PA SMITH	4-15-1988	SCALE AS NOTED	BLDG 218-E-16
DESIGNED BY HJ STEFFENS	4-14-1988	DRAWING NUMBER H-2-77619	SHEET 1 OF 2

MICROFILMED	BY-DATE	BY-DATE	REV BY DATE	DESCRIPTION	REV
	WHC APPROVAL	KEH APPROVAL			
	COMMENT REVIEW			REVISIONS	

NUMBER	TITLE
DRAWING TRACEABILITY LIST	

NUMBER	TITLE
H-2-77573	DRAWING LIST
REFERENCES	
NEXT USED ON H-2-77573	

H2775 C 01/04/2

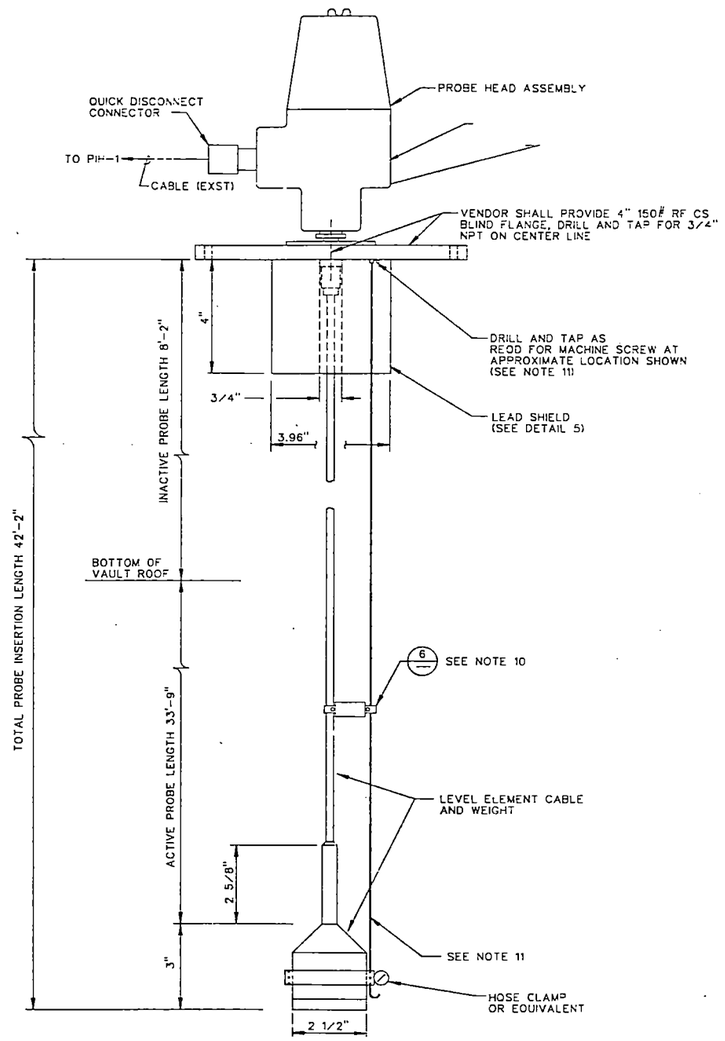

LEVEL ELEMENT ASSEMBLY
NTS
(SEE NOTE 12 & 13)
TAGGING: LE-102-1,LE-102-2,LE-102-3 & LE-102-4 FOR VAULT 102
LE-103-1,LE-103-2,LE-103-3 & LE-103-4 FOR VAULT 103

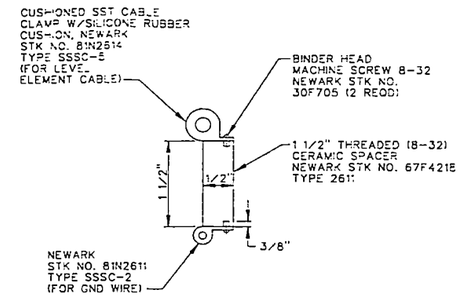

DETAIL 6
SCALE: FULL

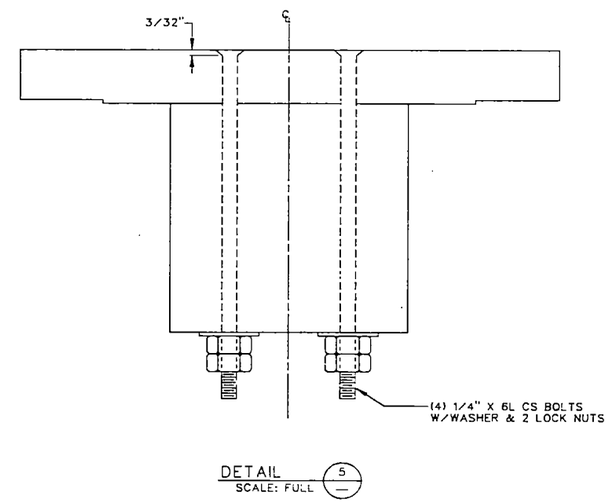

DETAIL 5
SCALE: FULL

NOTE:

1. SEE SHEET 1 FOR NOTES

OFFICIAL RELEASE BY WHC
DATE MAR 04 1989

1-8-89
REV 0

EDT # 101089

IMPACT LEVEL 3

WHC APPROVAL 1/20/89 BY SR Eisenhart	DATE 12-28 1988	U.S. DEPARTMENT OF ENERGY RICHLAND OPERATIONS OFFICE
		KAISER ENGINEERS HANFORD COMPANY
PROJ. ENGR. JD Elms	12-28 1988	INSTM VAULT MTD LEVEL ASSY
QA PROJECT ENGR BY H HENRIKSON	12-8 1988	
APPROVED BY RM ITEN	12-7 1988	
SAFETY AG MINISTER	12-7 1988	PROJECT TITLE
APPROVED BY HJS OSBLETT	12-7 1988	GROUT VAULT PAIR 12'B-E-16-102 & 103
CHECKED BY RC SWAN	12-7 1988	PROJ. B-714 / WO ER1083 / JOB
DRAWN BY PA SMITH	12-15 1988	SCALE 1/2 SEE BELOW / BLDG 21A-E-16 / SHEET 1 OF 1
DESIGNED BY HJ STEFFENS	12-14 1988	DRAWING NUMBER H-2-77619, 2

NUMBER	TITLE
DRAWING TRACEABILITY LIST	

NUMBER	TITLE
H-2-77573	DRAWING LIST
REFERENCES	
NEXT USED ON	H-2-77573

MICROFILMED	BY-DATE	BY-DATE	REV	DESCRIPTION	REV
APPROVAL	KEH APPROVAL				
REVISIONS					
COMMENT REVIEW					

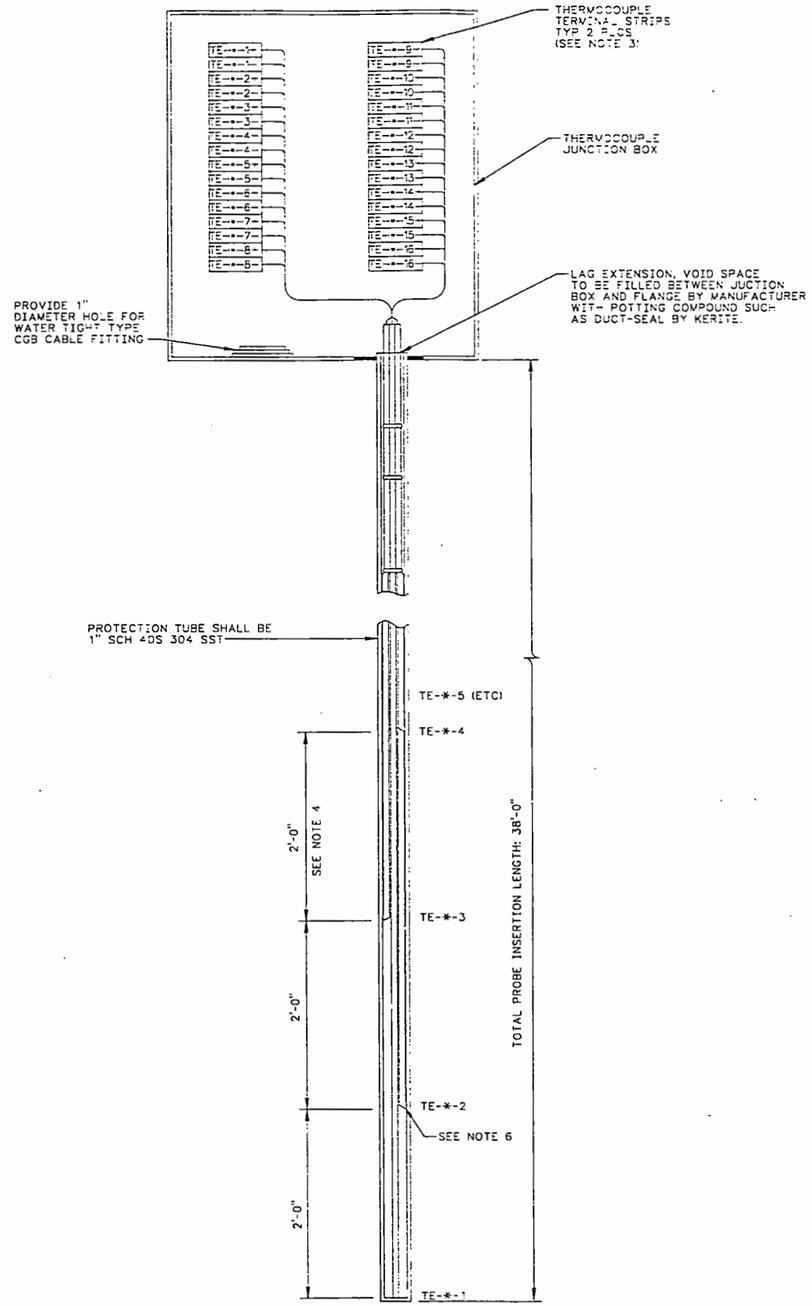

THERMOCOUPLE PROBE ASSEMBLY

*- USED IN LIEU OF 102-1, 102-2, 102-3 & 102-4 FOR VAULT 102
*-USED IN LIEU OF 103-1, 103-2, 103-3 & 103-4 FOR VAULT 103
(SEE NOTE 1,2 & 3)

NOTES:

1. SEE CONSTRUCTION SPECIFICATION B-714-C2, Y102 FOR THERMOCOUPLE ASSEMBLY.
2. FOUR COMPLETE ASSEMBLIES OF THERMOCOUPLE PROBES ARE REQUIRED FOR EACH VAULT.
3. THERMOCOUPLE ASSEMBLIES AS SUPPLIED BY VENDOR SHALL HAVE PROTECTION TUBE. THERMOCOUPLE JUNCTION BOX SHALL BE SUITABLE FOR BURIAL WITH 2 THERMOCOUPLE TERMINAL STRIPS. ALL THERMOCOUPLE LEADS SHALL BE CONNECTED TO APPROPRIATE TERMINAL ON TERMINAL STRIPS. TERMINAL STRIPS SHALL HAVE CHROMEL (+) AND ALUMEL (-) TERMINALS.
4. EQUAL SPACING OF 2'-0" BETWEEN ALL 16 THERMOCOUPLES. TOTAL ACTIVE LENGTH IS 30'-0".
5. ALL DIMENSIONS ARE NOMINAL (±3/16").
6. PLACE A CRUMPLED 2" SQUARE PIECE OF ALUMINUM FOIL AT THE BOTTOM OF EACH TUBE FOR BETTER HEAT TRANSFER.

OFFICIAL RELEASE BY WHC
DATE APR 04 1989

EDT = 101089

1-8-89 REV 0

IMPACT LEVEL 3

VENDOR INFORMATION

WHC APPROVAL 12/29/87 BY JR Stevens	DATE 12-28 1988	U.S. DEPARTMENT OF ENERGY RICHLAND OPERATIONS OFFICE
		KAISER ENGINEERS HANFORD COMPANY
PROJ. ENGR. JHS 12-28-88	12-28 1988	INSTM VAULT MTD INSTM T/C ASSEMBLY
DR. H.W.HENRIKSON 12-8-88 H HENRIKSON	12-8 1988	
APPROVED BY ROBERT M ITEN	12-7 1988	
SAFETY AG MINISTER	12-7 1988	PROJECT TITLE
APPROVED BY HJS/C SUBLETT	12-7 1988	GROUT VAULT PAIR (218-E-16-102 & 103)
CHECKED BY RC SWAN	6-17 1988	PROJ. B-714 WO ER1060 JOB 242500
DRAWN BY PA SMITH	4-15 1988	SCALE NONE BLDG 218-E-16 INDEX 55
DESIGNED BY HJ STEFFENS	4-15 1988	DRAWING NUMBER H-2-77620 SHEET 1 OF 2 REV C

NUMBER	TITLE
H-4-77573	DRAWING LIST

DRAWING TRACEABILITY LIST

NUMBER	TITLE

REFERENCES

NEXT USED ON H-4-77573

BY-DATE	BY-DATE	REV BY DATE	DESCRIPTION	REV
APPROVAL	KEH APPROVAL			
COMMENT REVIEW				

REVISIONS

MICROFILMED

H2776200
C 01/14

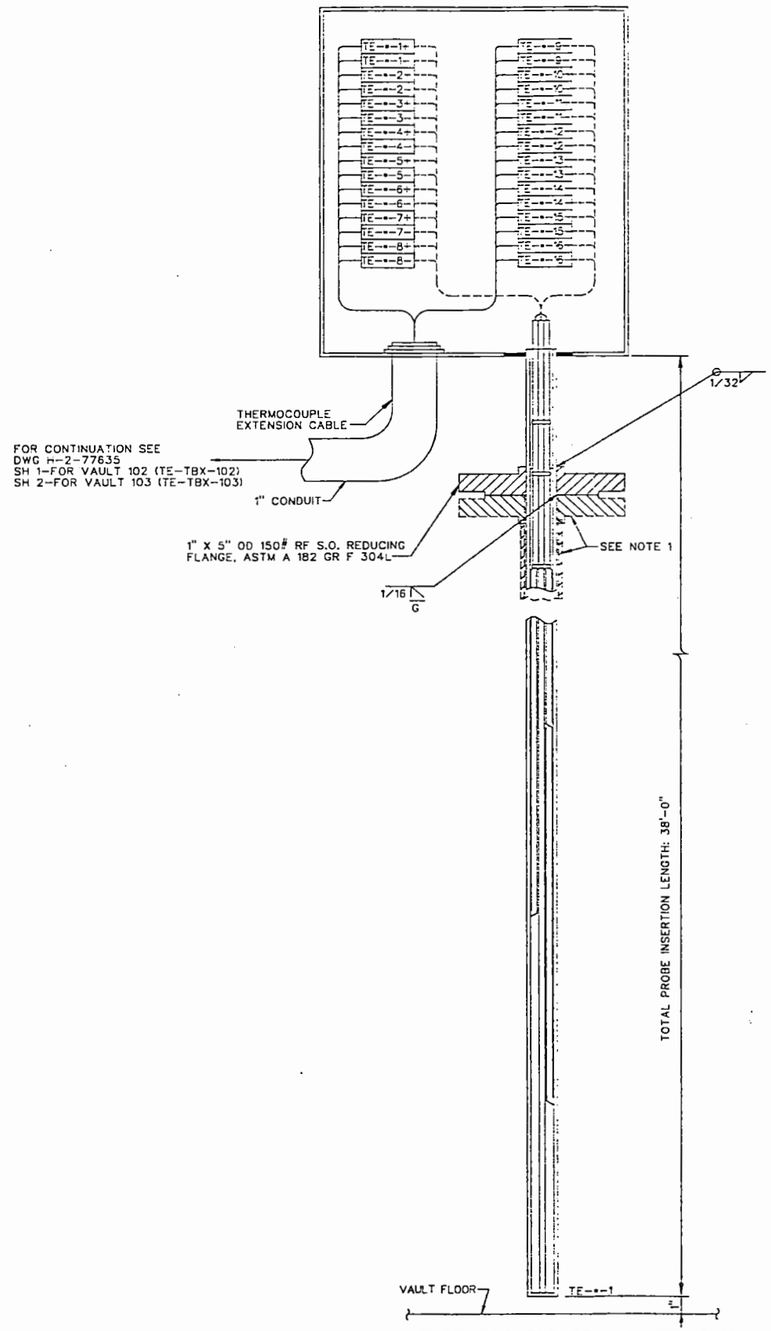

THERMOCOUPLE PROBE ASSEMBLY

TE-102-1, TE-102-2, TE-102-3 & TE-102-4 FOR VAULT 102
TE-103-1, TE-103-2, TE-103-3 & TE-103-4 FOR VAULT 103

NOTES:

1. FOR FLANGE AND PIPE DETAILS SEE DETAIL 3 ON DRAWING H-2-77619, SH *.
2. BOLT THERMOCOUPLE ASSY TO RISER USING (4) 1/2"-13UNC-2A X 2-1/2" L HEAVY HEX BOLTS WITH 1/2"-13UNC-2B HEAVY HEX NUT.

OFFICIAL RELEASE BY WHC DATE APR 04 1989

1-8-89 REV 0

EDT # 101089

IMPACT LEVEL 3

DRAWING TRACEABILITY LIST			
NUMBER	TITLE	NUMBER	TITLE
		H-4-77573	DRAWING LIST
		NEXT USED ON	H-4-77573

REFERENCES	
NUMBER	TITLE

REVISIONS				
BY-DATE	BY-DATE	REV BY DATE	DESCRIPTION	REV
APPROVAL	KEH APPROVAL			
COMMENT REVIEW				

MICROFILMED

WHC APPROVAL BY JR Bauer	DATE 1/12/89	12-28-1988
PROJ ENGR JS Cook		12-28-1988
DR H HENRIKSON		12-8-1988
APPROVED BY ROBERT M ITEN		12-7-1988
SAFETY AG MINSTER		12-7-1988
APPROVED BY HJS/D SUBLETT		12-8-1988
CHECKED BY RC SWAN		5-17-1988
DRAWN BY PA SMITH		4-15-1988
DESIGNED BY HJ STEFFENS		4-15-1988

U.S. DEPARTMENT OF ENERGY
RICHLAND OPERATIONS OFFICE
KAISER ENGINEERS HANFORD COMPANY

INSTM
VAULT MTD INSTM
T/C ASSEMBLY

PROJECT TITLE: GROUT VAULT PAIR (218-E-16-102 & 1031)

PROJ	PO	JOB
B-714	ER1060	

SCALE	BLDG	INDEX
NONE	218-E-16	59**

DRAWING NUMBER	SHEET	OF
H-2-77620	2	2

H277620A2
C 01/03/89

~~REVISED~~

8907160053

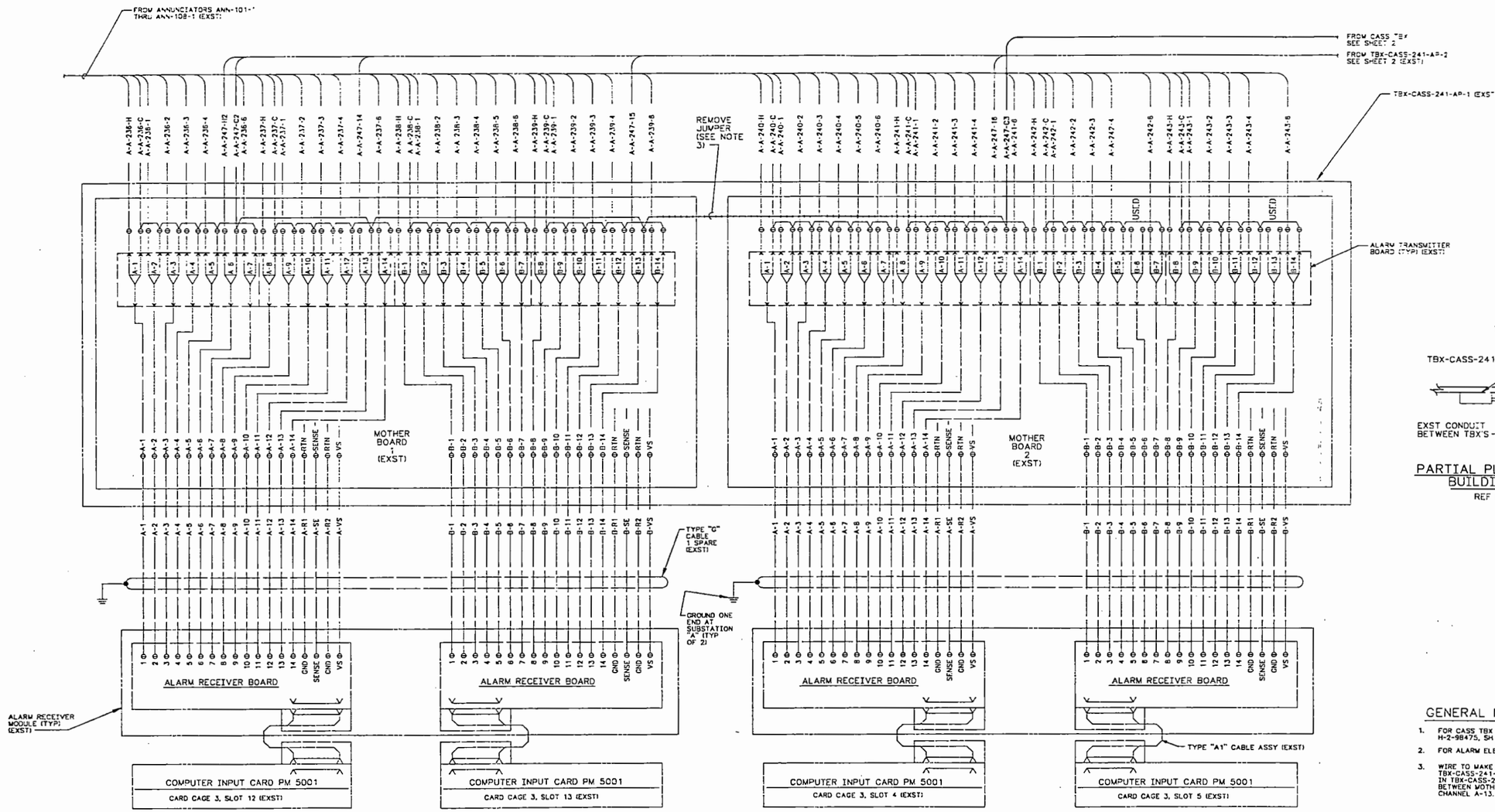

CASS ALARM INTERFACE CONNECTION DIAGRAM A
BLDG 241-AP-271

REF DWG H-2-90507, SH 1 & H-2-98471, SH 1

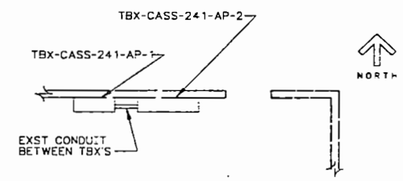

PARTIAL PLAN OF INSTRUMENT BUILDING 241-AP-271

REF DWG H-2-90504

GENERAL NOTES:

1. FOR CASS TBX LOCATION, SEE DRAWINGS H-2-90504, H-2-98473 & H-2-98475, SH 2
2. FOR ALARM ELEMENTARY, SEE H-2-77640
3. WIRE TO MAKE CONNECTION ON MOTHERBOARD 2 IN TBX-CASS-241-AP-1 IS COILED IN TBX-CASS-241-AP-2. IN TBX-CASS-241-AP-1, REMOVE EXISTING JUMPER WIRE BETWEEN MOTHERBOARD 1, CHANNEL B-13 AND MOTHERBOARD 2, CHANNEL A-13.

OFFICIAL RELEASE BY WHC
DATE APR 04 1989

1-8-89 REV 0

EDT # 101089

IMPACT LEVEL 2

WHC APPROVAL BY	DATE 12-29-1988	U.S. DEPARTMENT OF ENERGY RICHLAND OPERATIONS OFFICE
		KAISER ENGINEERS HANFORD COMPANY
PROJ ENGR	12-29-1988	INSTM CASS ALARM INTERFACE CONNECTION DIAGRAM
QA TEST ENGR H HENRIKSON	12-8-1988	
APPROVED BY ROBERT M ITEN	12-7-1988	
SAFETY AG MINISTER	12-7-1988	
PROJECT TITLE GROUT VAULT PAIR (218-E-16-102 & 103)		
CHECKED BY RC SWAN	5-17-1988	PROJ 8-714 / WO ER1060 / TYPE
DRAWN BY PA SMITH	4-29-1988	SCALE NONE / BLDG 241-AP,218-E-16 / TIME
DESIGNED BY HJ STEFFENS	4-25-1988	DRAWING NUMBER H-2-77621 / SHEET 1 / SHEETS 2

NUMBER	TITLE
H-2-98471 ISH 1	INSTM CASS AL INTFC CONN DIAG
H-2-90507 ISH 1	INSTM CASS AL INTFC CONN DIAG
H-2-98473	ELEC SITE & VAULT PLAN & DETAILS
H-2-98475 ISH 2	ELEC DETAILS
H-2-98504	INSTM CASS AL INTFC EQPT ARR
H-2-77573	DRAWING LIST

DRAWING TRACEABILITY LIST — REFERENCES — NEXT USED ON H-2-77573

REV	BY-DATE	BY-DATE	REV BY DATE	DESCRIPTION
	APPROVAL	KEH APPROVAL		REVISIONS
	COMMENT REVIEW			

MICROFILMED

H22762'A'
C 07/03/89

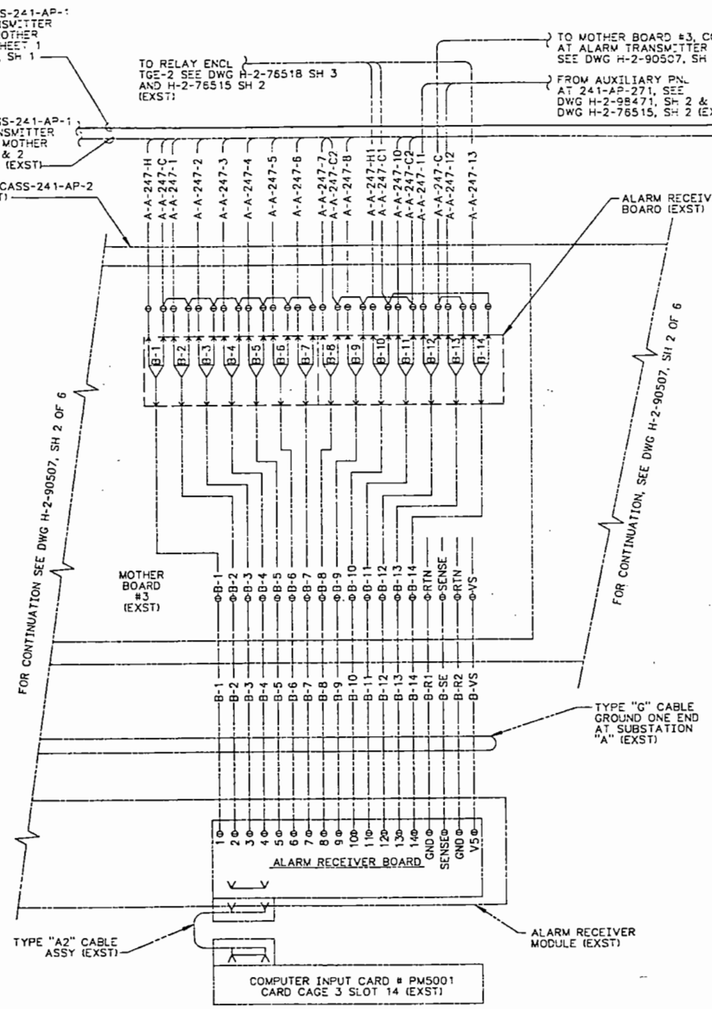

CASS ALARM INTERFACE CONNECTION DIAGRAM B

BLDG 241-AP-271

REF DWG H-2-90507, SH 2 & H-2-98471, SH 2

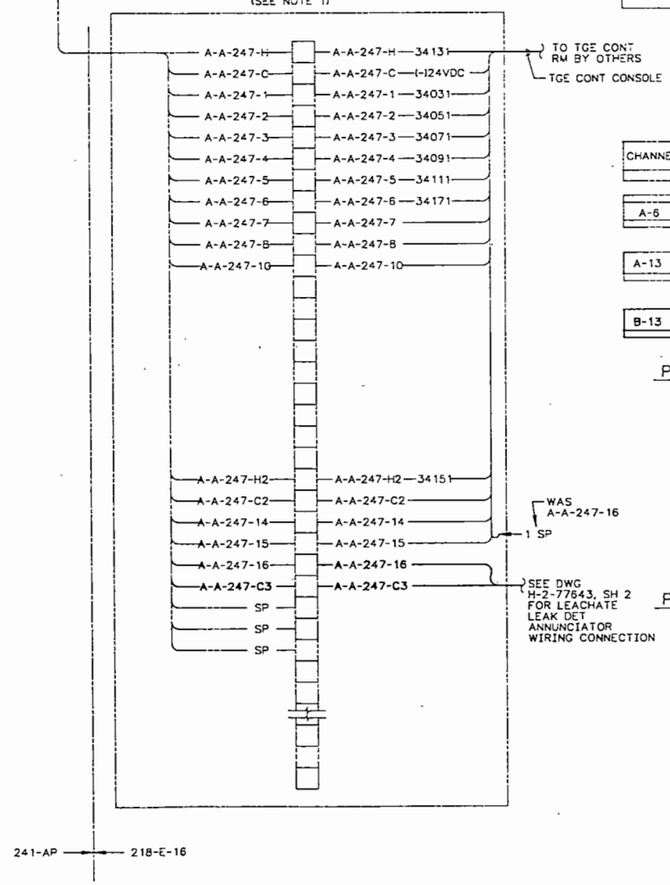

CHANNEL	CASS ALARM	CASS WIRE	TGE WIRE	ANNUNCIATOR WIRE
B-1	TGE LOSS OF 480V PRIMARY POWER	A-A-247-H1,-C1	34131,-24VDC	NONE
B-2	TGE BACKFLOW HIGH RADIATION	A-A-247-1	34031	NONE
B-3	TGE FILTRATION MODULE MOTOR PIT HIGH RADIATION	A-A-247-2	34051	NONE
B-4	TGE EXHAUST STACK HIGH RADIATION	A-A-247-3	34071	NONE
B-5	TGE MIXER MODULE HIGH-LOW PRESSURE	A-A-247-4	34091	NONE
B-6	TGE LCT/MV TK/SUMPS HIGH LEVEL	A-A-247-5	34111	NONE
B-7	TGE COMPOSITE ALARMS ACTIVATION	A-A-247-6	34171	NONE
B-8	TGE AREA RADIATION MONITOR/ CONTINUOUS AIR MONITOR/VAULT EXHAUST AIR MONITOR-HIGH RADIATION	A-A-247-7	64351	NONE
B-9	TGE AREA RADIATION MONITOR/ CONTINUOUS AIR MONITOR/VAULT EXHAUST AIR MONITOR-FAILURE & LOW FLOW	A-A-247-8	64371	NONE
B-10	TRANSPORTABLE GROUT EQUIPMENT RELAY CABINET POWER SUPPLY	A-A-247-H1,-C1	NONE	A-7-H, A-7-N
B-11	TGE VAULT PRESSURE HIGH OR LOW	A-A-247-10	64431	NONE
B-12	AP FARM PUMP PIT02D LEAK DETECTOR FAILURE	A-A-247-11	NONE	ANN-AUX-42
B-13	TRANSPORTABLE GROUT EQUIPMENT LINE SN-621 LEAK DETECTOR FAILURE	A-A-247-12	NONE	ANN-AUX-43
B-14	AP FARMS-SEISMIC DISTURBANCE DETECTED	A-A-247-13	NONE	A-7-1

CASS ALARM INTERFACE ENCLOSURE TBX-CASS-241-AP-2

241-AP-271 BLDG

MOTHERBOARD 3

REF DWG H-2-98471, SH 2

CHANNEL	CASS ALARM	CASS WIRE	TGE WIRE	ANNUNCIATOR WIRE
A-6	TGE STANDBY GENERATOR OPERATING	A-A-247-H2,-C2	34151	NONE
A-13	TGE ENCASED LINE LEAK DETECTORS	A-A-247-14	64391	NONE
B-13	VP,EW & LEACH SUMP LDK	A-A-247-15	64471	NONE

PARTIAL OF CASS ALARM INTERFACE ENCLOSURE TBX-CASS-241-AP-1

241-AP-271 BLDG

MOTHERBOARD 1

REF DWG H-2-98471, SH 2

CHANNEL	INTERFACED ALARM	CASS WIRE	ANNUNCIATOR WIRE
A-13	GROUT GENERAL ALARM	A-A-247-16,-C3	ANN-1

PARTIAL OF CASS ALARM INTERFACE ENCLOSURE TBX-CASS-241-AP-1

241-AP-271 BLDG

MOTHERBOARD 2

REF DWG H-2-98471, SH 2

NOTES:

1. FOR GENERAL NOTES, SEE SHEET 1.

OFFICIAL RELEASE BY WHC DATE APR 04 1989

EDT = 101089

1-8-89 REV 0

IMPACT LEVEL 2.

WHC APPROVAL BY	DATE 12-28 1988	U.S. DEPARTMENT OF ENERGY RICHLAND OPERATIONS OFFICE
		KAISER ENGINEERS HANFORD COMPANY
PROJECT ENGINEER BY CS CLOUD	12-28 1988	INSTM CASS ALARM INTERFACE CONNECTION DIAGRAM
QA MGR INSPECTOR H HENRIKSON	12-8 1988	
APPROVED BY ROBERT M ITEN	12-7 1988	
SAFETY AG MINISTER	12-7 1988	PROJECT TITLE GROUT VAULT PAIR (218-E-16-102 & 103)
APPROVED BY HJS/D BUCKLETT	12-7 1988	
CHECKED BY RC SWAN	5-17 1988	PROJ B-714 / ER1060
DRAWN BY PA SMITH	4-25 1988	SCALE NONE / SIZE 241-AP,218-E-15
DESIGNED BY HJ STEFFENS	4-25 1988	DRAWING NUMBER H-2-77621 / SHEET 2

NUMBER	TITLE	NUMBER	TITLE
H-2-98471	SH 2-INSTM CASS AL INTFC CONN DIAG	H-2-77573	DRAWING LIST
H-2-90507	SH 2-INSTM CASS AL INTFC CONN DIAG		

DRAWING TRACEABILITY LIST — REFERENCES — NEXT USED ON H-2-77573

BY-DATE	EV-DATE	REV BY DATE	DESCRIPTION
APPROVAL	KEH APPROVAL		REVISIONS
COMMENT REVIEW			

MICROFILMED

9017178035

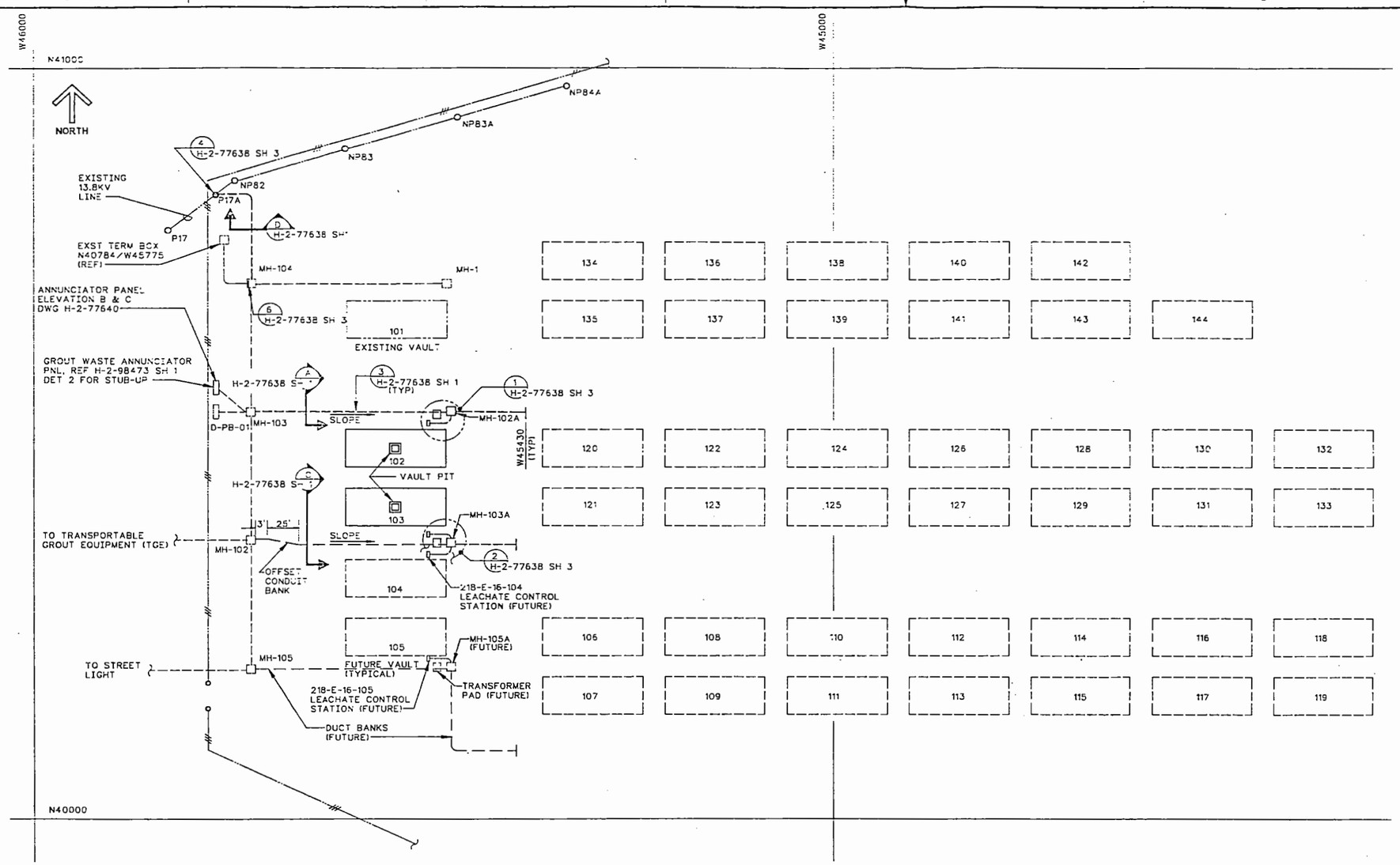

PLAN
SCALE: 1 =60'-0

NOTES:
1. ABBREVIATIONS ARE PER ANSI Y1.1, UNLESS OTHERWISE NOTED.

OFFICIAL RELEASE BY WHC
DATE APR 04 1989

EDT # 101089

IMPACT LEVEL 2

1-7-89
REV 0

WHC APPROVAL		DATE	U.S. DEPARTMENT OF ENERGY RICHLAND OPERATIONS OFFICE
BY SR		12-28 1988	KAISER ENGINEERS HANFORD COMPANY
PROJ		12-28 1988	ELECTRICAL SITE PLAN
QA		7-13 1988	
APPROVED BY	RW ITEN	7-13 1988	
SAFETY	D PARTHREE	7-13 1988	
APPROVED BY	WAC SUBLETT	7-13 1988	
CHECKED BY	RJ HARMAN	7-13 1988	PROJECT TITLE: GROUT VAULT PATH 218-E-16-102 & 103
DRAWN BY	BRINKLEY	3-15 1988	PROJ. B-714 / WO ER1060 / JOB 242520
DESIGNED BY	WC ATKINS	3-15 1988	SCALE SHOWN / BLDG 218-E-16 / INSTR
CADFILE	B0776344		DRAWING NUMBER H-2-77634 / SHEET 1
CAD DOC	KEDRW-ACTIVE CAD		

NUMBER	TITLE	REFERENCES
H-2-98473	ELEC SITE & VAULT PLAN & DET	
H-2-77573	DRAWING LIST	
NUMBER	TITLE	

DRAWING TRACEABILITY LIST — NEXT USED ON

BY-DATE	BY-DATE	REV BY DATE	DESCRIPTION	REV
APPROVAL	KEH APPROVAL			
			REVISIONS	

MICROFILMED — COMMENT REVIEW

KE-CAD

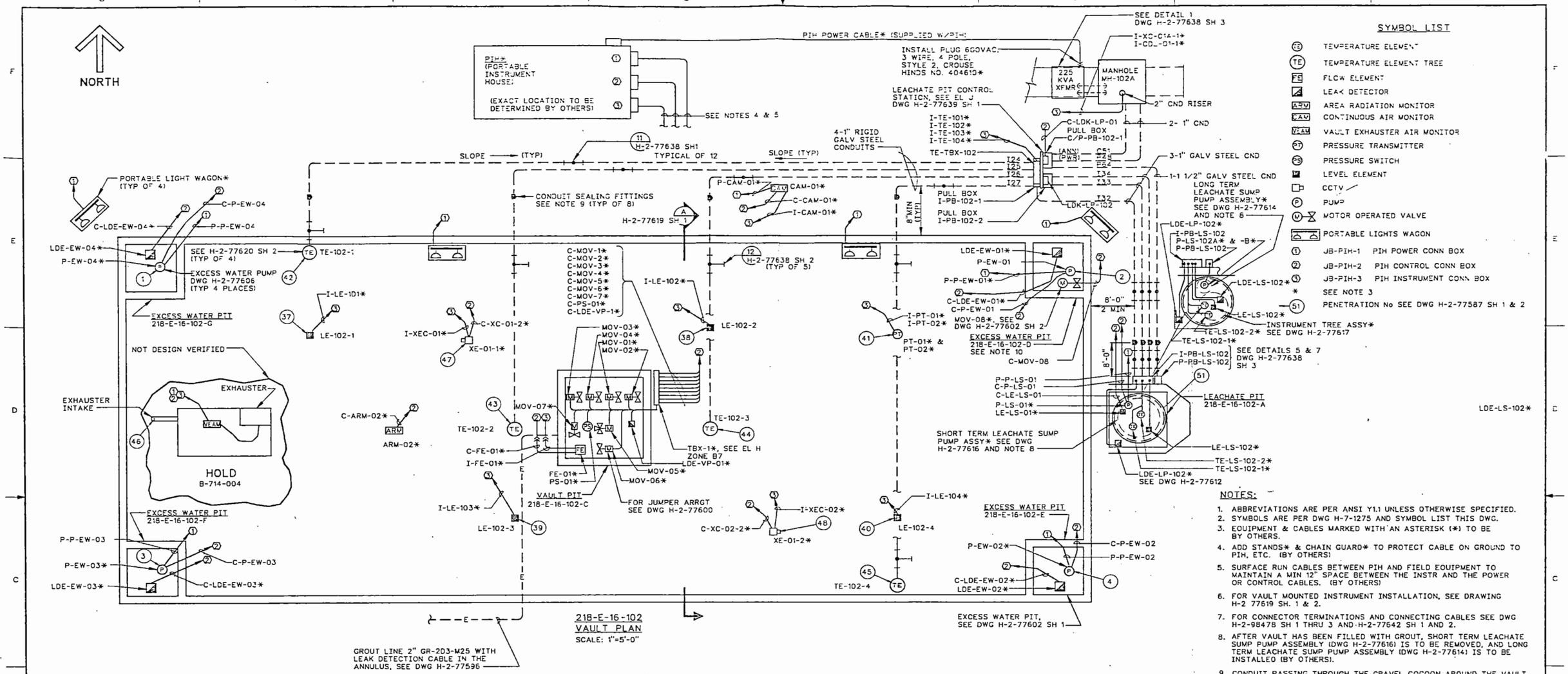

NOTES:

1. ABBREVIATIONS ARE PER ANSI Y1.1 UNLESS OTHERWISE SPECIFIED.
2. SYMBOLS ARE PER DWG H-7-1275 AND SYMBOL LIST THIS DWG.
3. EQUIPMENT & CABLES MARKED WITH AN ASTERISK (*) TO BE BY OTHERS.
4. ADD STANDS* & CHAIN GUARD* TO PROTECT CABLE ON GROUND TO PIH, ETC. (BY OTHERS)
5. SURFACE RUN CABLES BETWEEN PIH AND FIELD EQUIPMENT TO MAINTAIN A MIN 12" SPACE BETWEEN THE INSTR AND THE POWER OR CONTROL CABLES. (BY OTHERS)
6. FOR VAULT MOUNTED INSTRUMENT INSTALLATION, SEE DRAWING H-2 77619 SH. 1 & 2.
7. FOR CONNECTOR TERMINATIONS AND CONNECTING CABLES SEE DWG H-2-98478 SH 1 THRU 3 AND H-2-77642 SH 1 AND 2.
8. AFTER VAULT HAS BEEN FILLED WITH GROUT, SHORT TERM LEACHATE SUMP PUMP ASSEMBLY (DWG H-2-77616) IS TO BE REMOVED, AND LONG TERM LEACHATE SUMP PUMP ASSEMBLY (DWG H-2-77614) IS TO BE INSTALLED (BY OTHERS).
9. CONDUIT PASSING THROUGH THE GRAVEL COCOON AROUND THE VAULT & LEACHATE PIT TO HAVE SEALING FITTINGS INSTALLED. CONDUIT SEALING FITTINGS TO BE CROUSE HINDS TYPE EYS, SEALED WITH CHICO X FIBER AND CHICO A COMPOUND INSTALLED PER MANUFACTURERS RECOMMENDATIONS.
10. PUMP P-EW-01 OR MOV-8 MAY BE INSTALLED IN EXCESS WATER PITS 218-E-16-102D AND 218-E-16-103D BUT NOT BOTH IN THE SAME PIT AT THE SAME TIME.

NOT DESIGN VERIFIED — HOLD B-714-004 : HOLDING FOR EXHAUSTER DESIGN BY WHC.

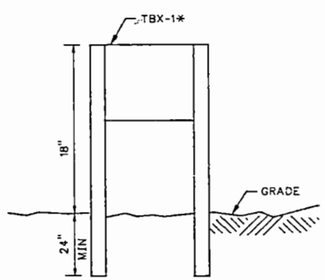

ELEVATION H
SCALE: NONE

CAPITAL RELEASE ENTERED DATE APR 14 1989

IMPACT LEVEL 2

EDT # 102073

WHC		DATE	U.S. DEPARTMENT OF ENERGY RICHLAND OPERATIONS OFFICE
BY JR BRIGGS			KAISER ENGINEERS HANFORD COMPANY
PROJ ENGR	S SUGACLOU		ELECTRICAL VAULT PLAN 218-E-16-102
DR & ENGR	JL BRIGGS		
APPROVED BY	RM ITEN		
SAFETY	D PARTHREE		
APPROVED BY	CAC SUBLETT		
DESIGNED BY	RJ HARMAN		PROJECT TITLE GROUT VAULT PAIR 218-E-16-102 & 103
DRAWN BY	JL BRINKLEY		PROJ B714 / ER1060 / WO 242500
DESIGN VER BY	WC ATKINS		SCALE SHOWN / BLDG 218-E-16 / INDEX 7101
CAD FILE	B077635A		DRAWING NUMBER H-2-77635 / SHEET 1 OF 2 / REV 0

NUMBER	TITLE
DRAWING TRACEABILITY LIST	

NUMBER	TITLE
H-2-98478	SH 1-3, ELEC CONN SCHED
H-2-77573	DRAWING LIST
REFERENCES	
NEXT USED ON	

BY-DATE	BY-DATE	REV BY DATE	DESCRIPTION	REV
APPROVAL	KEH APPROVAL		REVISIONS	
COMMENT REVIEW				

MICROFILMED

KEHCAD

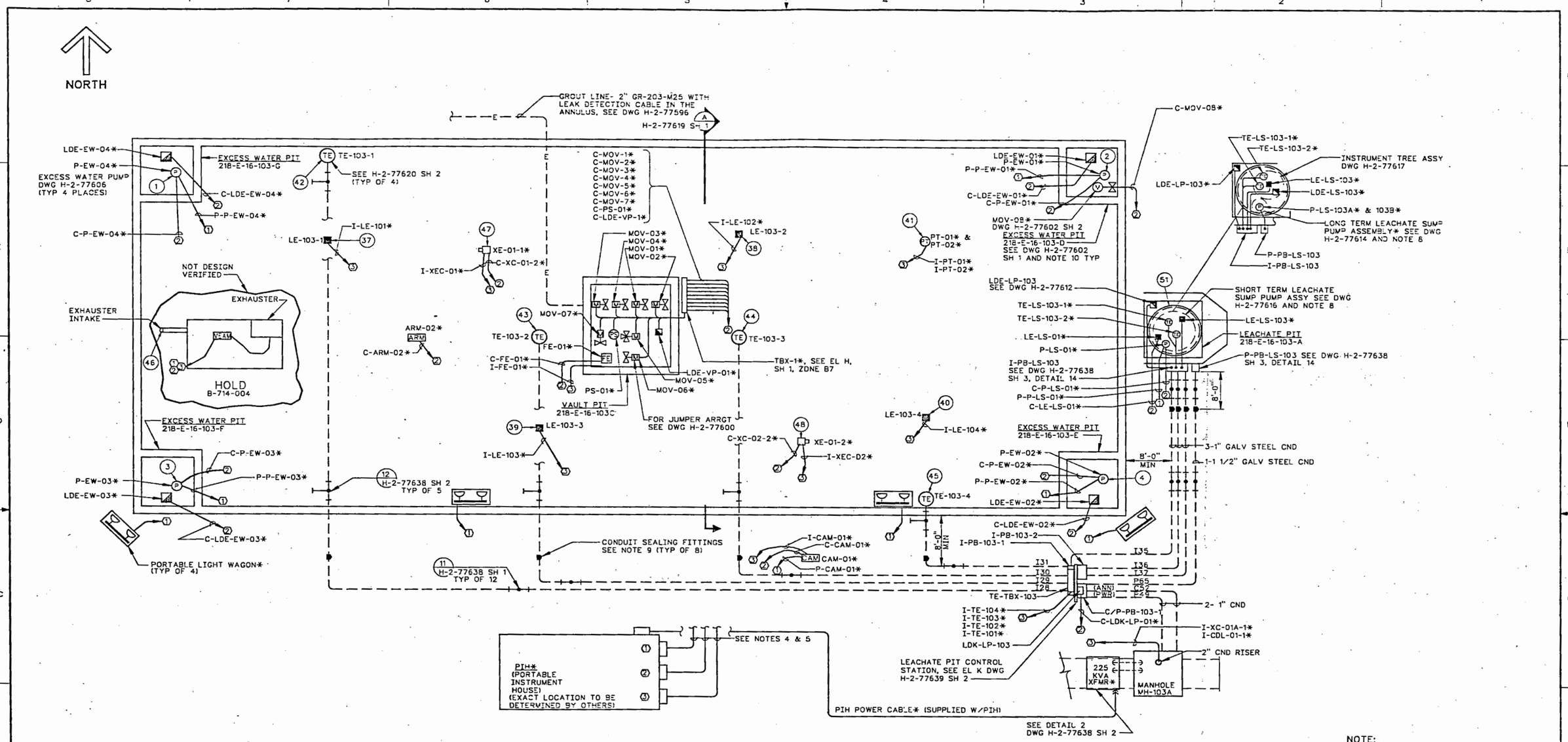

218-E-16-103
VAULT PLAN
SCALE: 1"=5'-0"

NOTE:

1. SEE SHEET 1 FOR NOTES & SYMBOL LIST.

OFFICIAL RELEASE BY WHC DATE APR 14 1989

4-5-89 REV 0

IMPACT LEVEL 2

EDT # 102073

WHC			U.S. DEPARTMENT OF ENERGY RICHLAND OPERATIONS OFFICE
			KAISER ENGINEERS HANFORD COMPANY
			ELECTRICAL VAULT PLAN 218-E-16-103
			PROJECT TITLE: GROUT VAULT PAIR 218-E-16-102 & 103
			PROJ B714 · WO ER1060 · JOB 242500
			SCALE SHOWN · BLDG 218-E-16 · TRACK 7301
			DRAWING NUMBER H-2-77635 · SHEET 2 OF 2 · REV 0

DRAWING LIST

NUMBER	TITLE

DRAWING TRACEABILITY LIST

REFERENCES

NUMBER	TITLE

NEXT USED ON

BY-DATE	BY-DATE	REV	DESCRIPTION	REV
APPROVAL	KEH APPROVAL	REV BY DATE	REVISIONS	

MICROFILMED

COMMENT REVIEW

KEHCAD

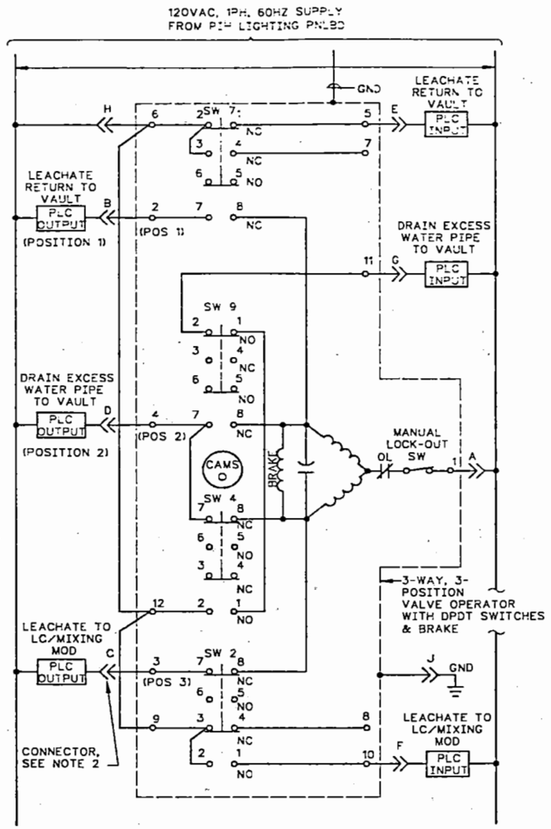

VALVE ACTUATOR LIMIT SWITCH OPERATION					
LIMIT SW NUMBER	CONTACT	POSITION 1	POSITION 2	POSITION 3	FUNCTION
SW-7	1-2				POS IND
	3-4				NOT USED
	5-6				NOT USED
	7-8				MOT CONT
SW-9	1-2				POS IND
	3-4				NOT USED
	5-6				NOT USED
	7-8				MOT CONT
SW-4	1-2				POS IND
	3-4				NOT USED
	5-6				NOT USED
	7-8				MOT CONT
SW-2	1-2				POS IND
	3-4				NOT USED
	5-6				NOT USED
	7-8				MOT CONT

LINE INDICATES CONTACT CLOSED

VALVE POSITIONS		
POSITION 1	POSITION 2	POSITION 3
LEACHATE RETURN TO PUMP	DRAIN EXCESS WATER PIPE TO VAULT	LEACHATE TO LC/MIXING MOD

FW DIVERTER VALVE MOV-08
3-WAY 3 POSITION MOTOR OPERATED VALVE
ELEMENTARY DIAGRAM
PREFIX WIRE NUMBERS WITH MOV-08

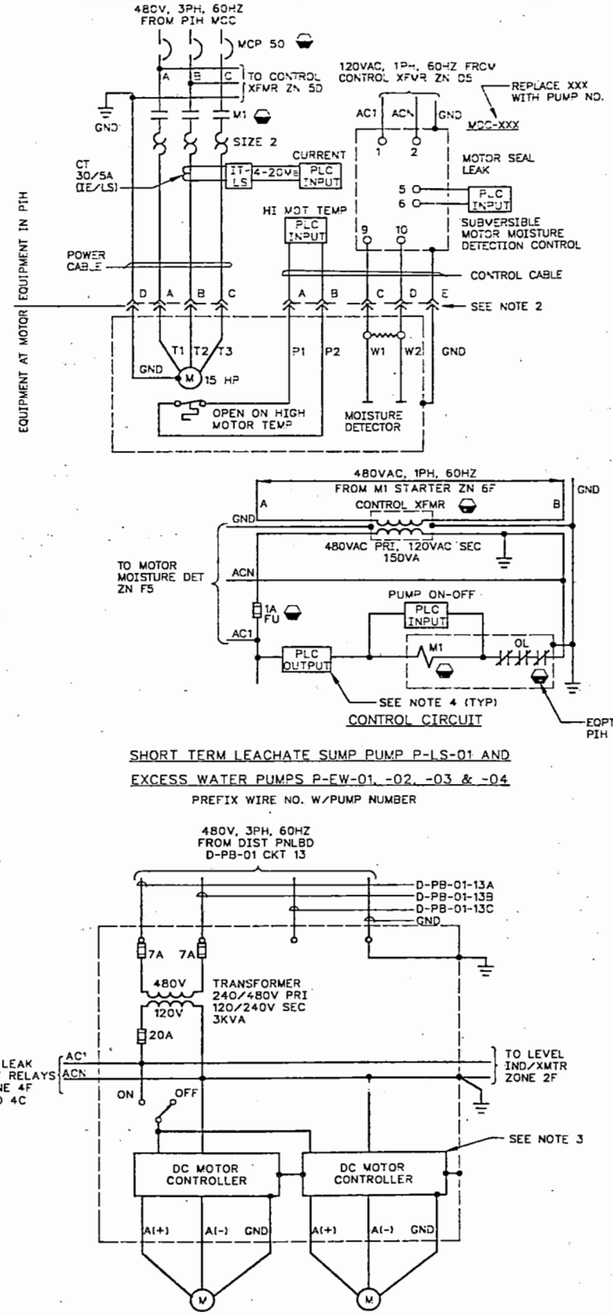

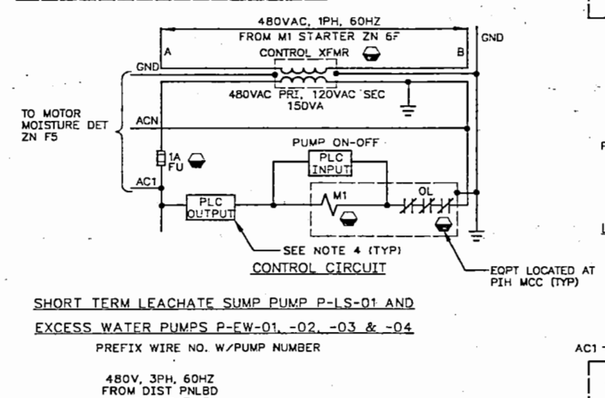

CONTROL CIRCUIT

SHORT TERM LEACHATE SUMP PUMP P-LS-01 AND
EXCESS WATER PUMPS P-EW-01, -02, -03 & -04
PREFIX WIRE NO. W/PUMP NUMBER

LONG TERM LEACHATE SUMP PUMPS
P-LS-102A & P-LS-102B
ELEMENTARY DIAGRAM
(PREFIX WIRE NUMBERS WITH PUMP NUMBERS)

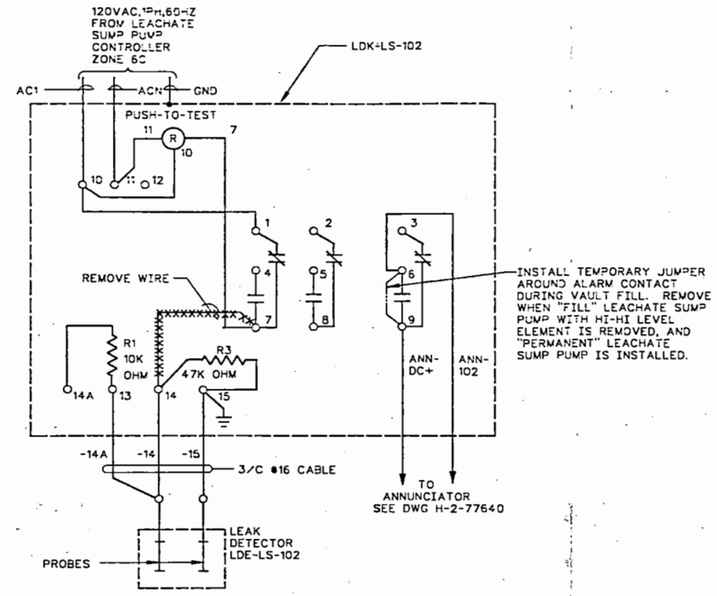

LEACHATE SUMP LEAK DETECTION CONNECTION DIAGRAM
(PREFIX PROBE WIRE NUMBERS WITH LDK-LS-102)

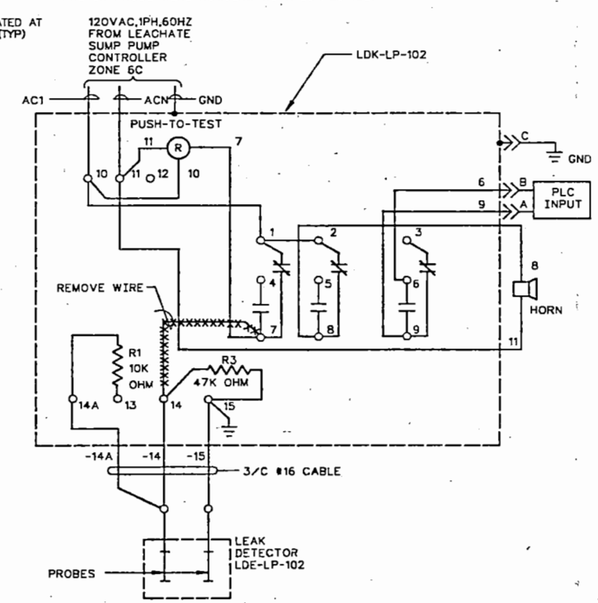

LEACHATE PIT LEAK DETECTION CONNECTION DIAGRAM
(PREFIX WIRE NUMBERS WITH LDK-LP-102)

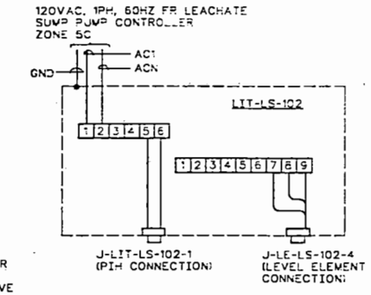

LEACHATE SUMP LEVEL IND XMTR
CONNECTION DIAGRAM

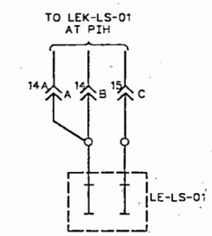

LEACHATE SUMP
HIGH-HIGH LEVEL
DETECTION CONN DIAG
(PREFIX WIRE NUMBERS W/LEK-LS-01)

ABBREVIATIONS:

PLC - PROGRAMMABLE LOGIC CONTROLLER
MCP - MOTOR CIRCUIT PROTECTOR
CLF - CURRENT LIMITING FUSE

NOTES:

1. ABBREVIATIONS ARE PER ANSI Y1.1 UNLESS OTHERWISE NOTED.
2. FOR CONNECTOR AND CABLE CONNECTIONS SEE CONNECTOR SCHEDULE DWG H-77642 SH 1 & 2 .
3. LONG TERM LEACHATE SUMP PUMPS P-LS-102A & P-LS-102B AND P-LS-103A & P-LS-103B TO BE TURNED ON AND HAVE THE SPEED OF THE TWO RESPECTIVE PUMPS SYNCHRONIZED PRIOR TO INSTALLATION IN THE SUMP. AFTER INSTALLATION THEY ARE TO BE SIMULTANEOUSLY OPERATED WITH THE COMMON ON/OFF SWITCH.
4. FOR PLC PROGRAMMING SEE P&ID DWG H-2-77618 SH 2.

OFFICIAL RELEASE EVENTS
DATE APR 14 1989

IMPACT LEVEL 2
EDT # 102073

WHC		U.S. DEPARTMENT OF ENERGY RICHLAND OPERATIONS OFFICE
		KAISER ENGINEERS HANFORD COMPANY
		ELECTRICAL ELEM & CONN DIAG VAULT 102
PROJECT TITLE		GROUT VAULT PAIR 218-E-16-102 & 103
PROJ B-714	WO ER1060	JOB 242500
SCALE NONE	BLDG 218-E-16	INDEX 7302.8002
DRAWING NUMBER	SHEET 1	OF 4 REV 0
H-2-77636		

NUMBER	TITLE
H-2-77573	DRAWING LIST

DRAWING TRACEABILITY LIST — NEXT USED ON

BY-DATE	BY-DATE	REV BY DATE	DESCRIPTION	REV
APPROVAL KEH APPROVAL			REVISIONS	

MICROFILMED — COMMENT REVIEW

KEHCAD

6571096

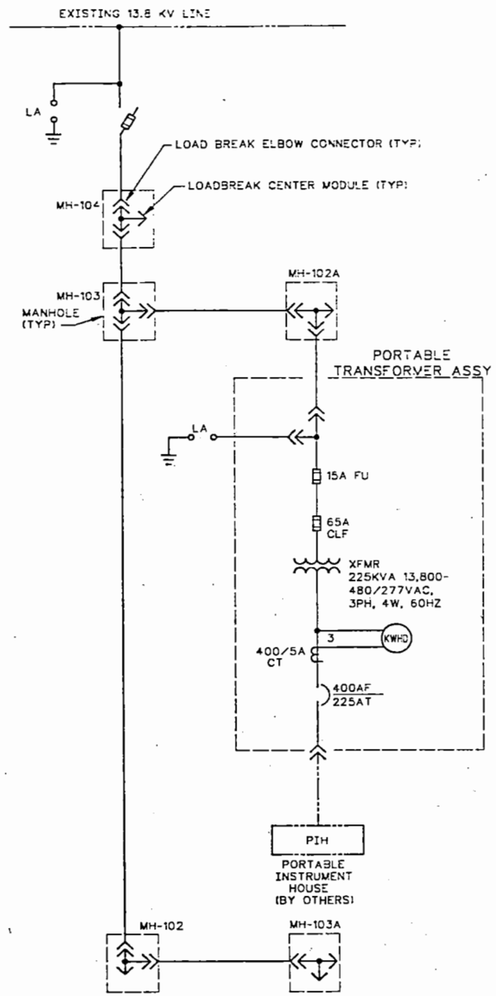

ONE LINE DIAGRAM

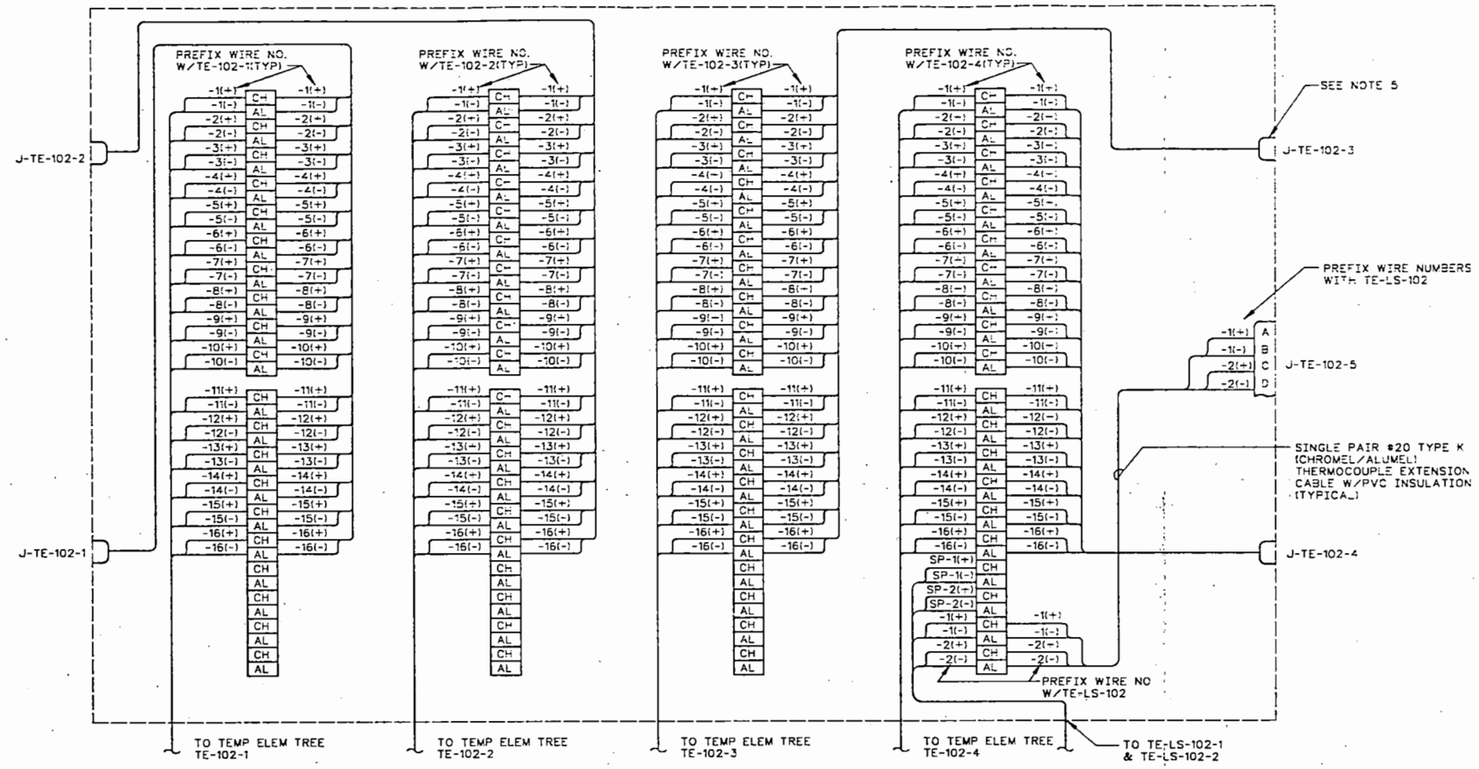

TE TERM BOX TE-TBX-102 CONNECTION DIAGRAM

NOTES:

SEE SHEET 1 FOR NOTES AND ABBREVIATIONS.

OFFICIAL RELEASE DATE APR 14 1989

EDT # 102073

IMPACT LEVEL 2

WHC	U.S. DEPARTMENT OF ENERGY RICHLAND OPERATIONS OFFICE
	KAISER ENGINEERS HANFORD COMPAN
	ELECTRICAL ELEM & CONN DIAG VAULT 102
	GROUT VAULT PAIR 218-E-16-102 &103
	B-714 · ER1060 · 242500
	NONE · 218-E-16 · 7302.8002 720
	H-2-77636 · 2 · 4 · 0

NUMBER	TITLE
DRAWING TRACEABILITY LIST	

NUMBER	TITLE
DRAWING LIST	
REFERENCES	
NEXT USED ON	

BY-DATE	BY-DATE	REV BY DATE	DESCRIPTION	REV
APPROVAL	KEH APPROVAL		REVISIONS	
COMMENT REVIEW				

MICROFILMED

CAD FILE B0776363

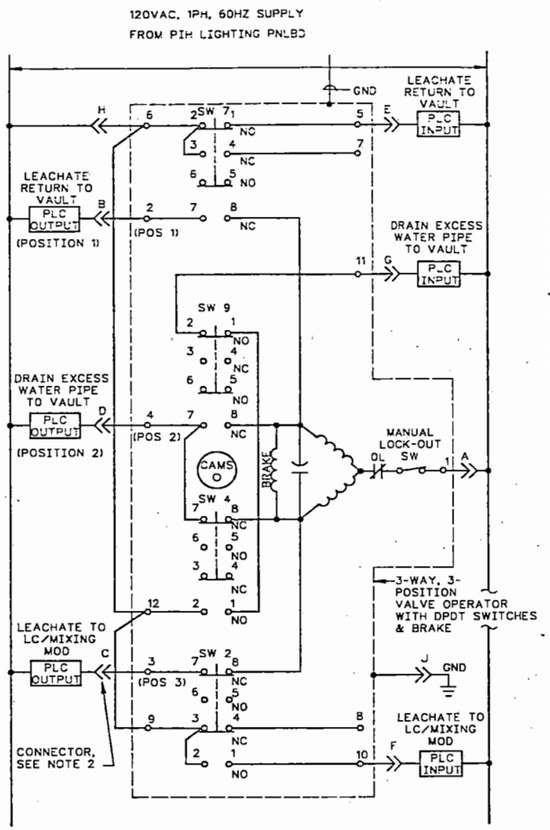

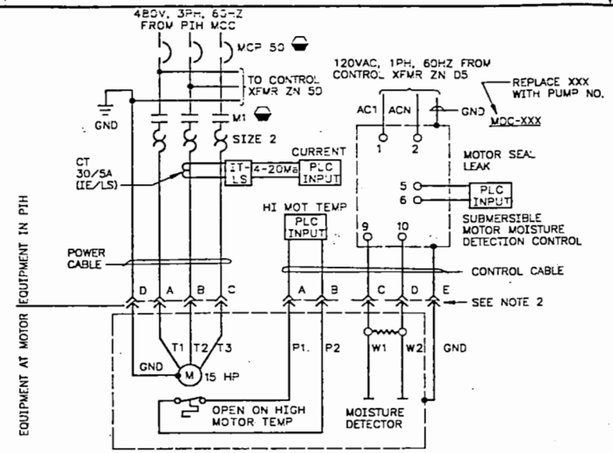

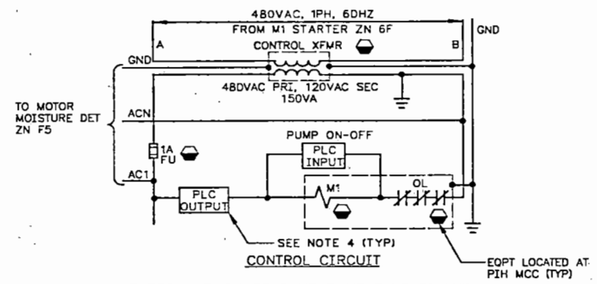

CONTROL CIRCUIT

SHORT TERM LEACHATE SUMP PUMP P-LS-01 AND EXCESS WATER PUMPS P-EW-01, -02, -03 & -04

PREFIX WIRE NO. W/PUMP NUMBER

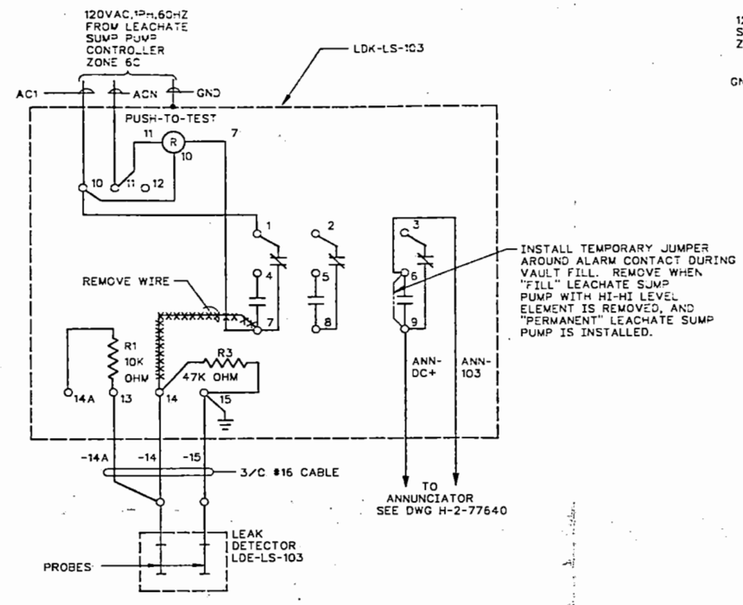

LEACHATE SUMP LEAK DETECTION CONNECTION DIAGRAM

(PREFIX PROBE WIRE NUMBERS WITH LDK-LS-103)

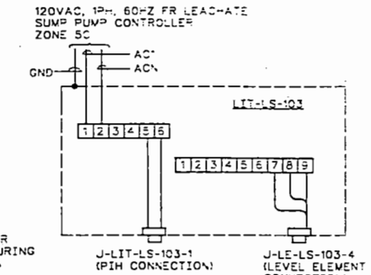

LEACHATE SUMP LEVEL IND XMTR CONNECTION DIAGRAM

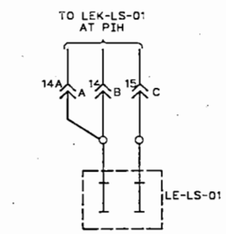

LEACHATE SUMP HIGH-HIGH LEVEL DETECTION CONN DIAG

(PREFIX WIRE NUMBERS W/LEK-LS-01)

VALVE ACTUATOR LIMIT SWITCH OPERATION					
LIMIT SW NUMBER	CONTACT	POSITION 1	POSITION 2	POSITION 3	FUNCTION
SW-7	1-2				POS IND
	3-4				NOT USED
	5-6				NOT USED
	7-8				MOT CONT
SW-9	1-2				POS IND
	3-4				NOT USED
	5-6				NOT USED
	7-8				MOT CONT
SW-4	1-2				POS IND
	3-4				NOT USED
	5-6				NOT USED
	7-8				MOT CONT
SW-2	1-2				POS IND
	3-4				NOT USED
	5-6				NOT USED
	7-8				MOT CONT

LINE INDICATES CONTACT CLOSED

VALVE POSITIONS		
POSITION 1	POSITION 2	POSITION 3
LEACHATE RETURN TO PUMP	DRAIN EXCESS WATER PIPE TO VAULT	LEACHATE TO LC/MIXING MOD

EW DIVERTER VALVE MOV-08
3-WAY 3 POSITION MOTOR OPERATED VALVE
ELEMENTARY DIAGRAM
PREFIX WIRE NUMBERS WITH MOV-08

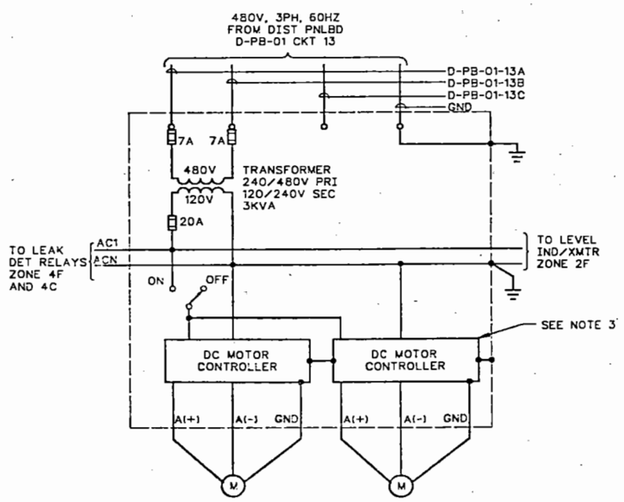

LONG TERM LEACHATE SUMP PUMPS
P-LS-103A & P-LS-103B
ELEMENTARY DIAGRAM
(PREFIX WIRE NUMBERS WITH PUMP NUMBERS)

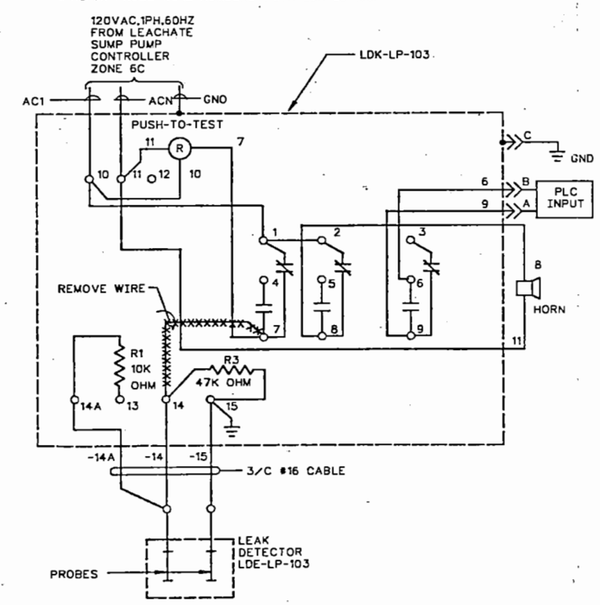

LEACHATE PIT LEAK DETECTION CONNECTION DIAGRAM

(PREFIX WIRE NUMBERS WITH LDK-LP-103)

NOTES:

SEE SHEET 1 FOR NOTES AND ABBREVIATIONS.

4-5-89
REV 0

OFFICIAL RELEASE
DATE APR 14 1989

IMPACT LEVEL 2
EDT # 102073

NUMBER	TITLE	NUMBER	TITLE
DRAWING TRACEABILITY LIST		NEXT USED ON	

REFERENCES

REV NO.	DESCRIPTION	BY	DATE	APPROVALS
REVISIONS				

CAD FILE B077636C CAD CODE 2J:IBM:ACD2:9.0:NA

DRAWN D ELLIOTT		U.S. DEPARTMENT OF ENERGY RICHLAND OPERATIONS OFFICE KAISER ENGINEERS HANFORD COMPANY
CHECKED R HARMAN		ELECTRICAL ELEM & CONN DIAG VAULT 103
LEAD ENGR WC ATKINS		
ELEC ENGR C SUBLETTE		
SAFETY AG MINISTER		
DESIGN SC ASHWORTH		
DA		REFERENCE GROUT VAULT PAIR 218-E-16-102 & 103
KEN-REP		SYSTEM F 218-E-16 / 7302, 8902 — DWG NO H-2-77636 — REV NO 0
APPROVED FOR RELEASE BY		
FOR WHC	DATE 7-12-89 4/10/89	SCALE NONE — LOG NO ER9090 — SHEET 3 OF 4

IMPACT LEVEL | EDT

~~KE-CAD~~

1 9 3 0 9 6 / 1 1 0 6

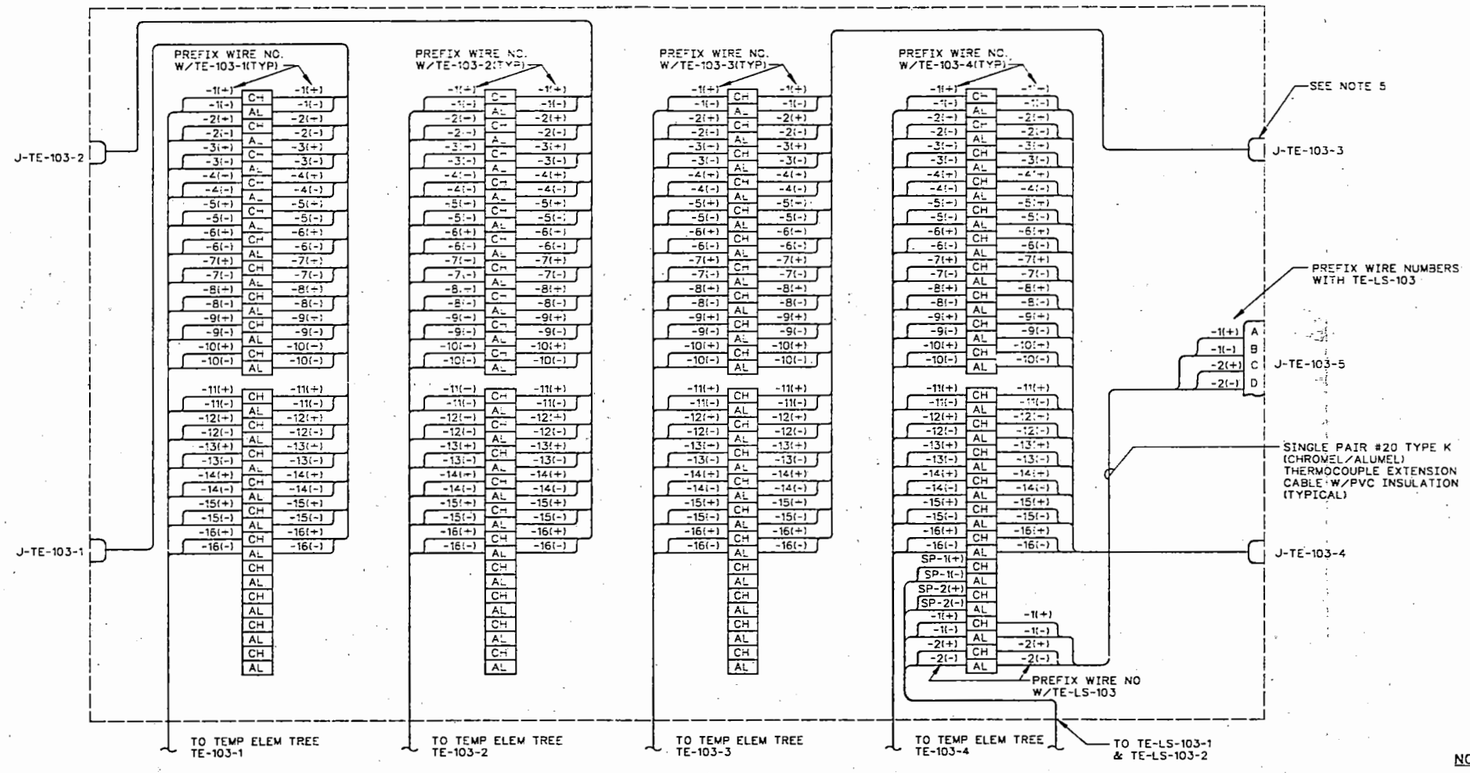

TE TERM BOX TE-TBX-103 CONNECTION DIAGRAM

NOTES:

SEE SHEET 1 FOR NOTES AND ABBREVIATIONS.

OFFICIAL RELEASE BY WHO
DATE APR 14 1983

1-7-89 Rev 0

NUMBER	TITLE	NUMBER	TITLE
DRAWING TRACEABILITY LIST		REFERENCES	

REV NO.	DESCRIPTION	BY DATE	APPROVALS
REVISIONS			

CAD FILE 90776360 CAD CODE 2J:IBV:ACD2:9.0:NN

IMPACT LEVEL 2 EDT 102073

DRAWN D ELLIOTT
CHECKED R HARMAN
LEAD ENGR WC ATKINS
DISC MGR C SUBLETT
SAFETY AG MINISTER
ENVIR SC ASHWORTH

U.S. DEPARTMENT OF ENERGY
RICHLAND OPERATIONS OFFICE
KAISER ENGINEERS HANFORD COMPANY

ELECTRICAL
ELEM & CONN
DIAG VAULT 103

GROUT VAULT PAIR 218-E-16-102 & 103

F 218-E-7302 -16 8002 H-2-77636 0

SCALE NONE JOB NO ER9290 SHEET 4 OF 4

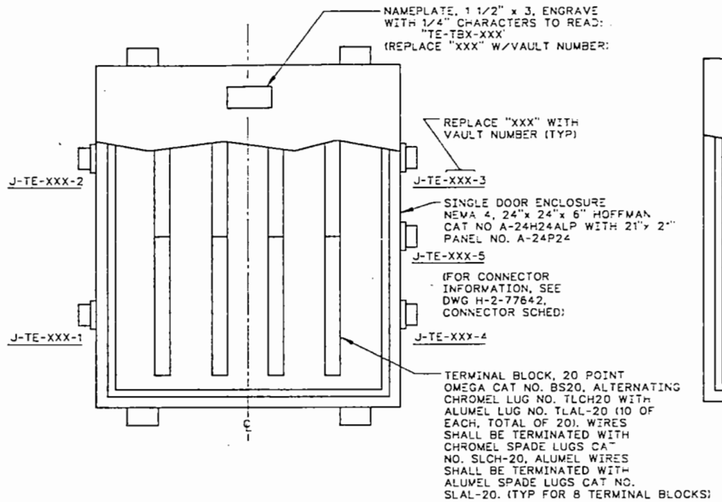

DETAIL 1 / H-2-77639
TE TERMINAL BOX

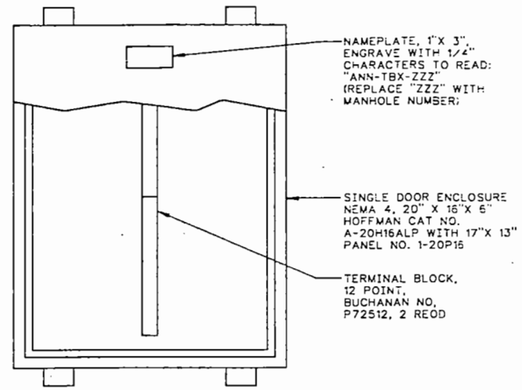

DETAIL 3 / H-2-77638 SH 2
ANN TERMINAL BOX

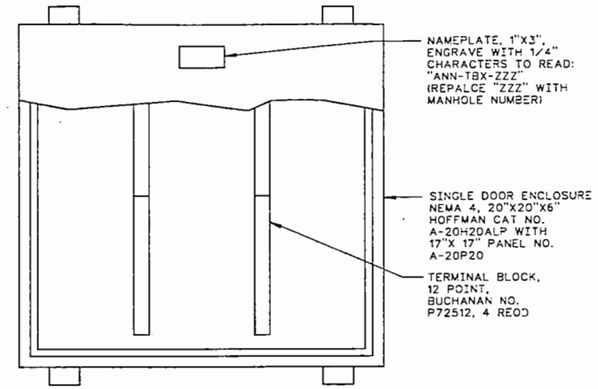

DETAIL 5 / H-2-77638 SH 2
ANN TERMINAL BOX

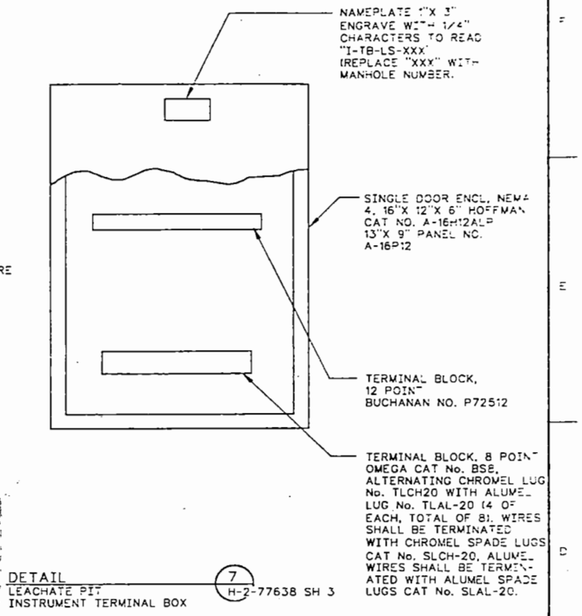

DETAIL 7 / H-2-77638 SH 3
LEACHATE PIT INSTRUMENT TERMINAL BOX

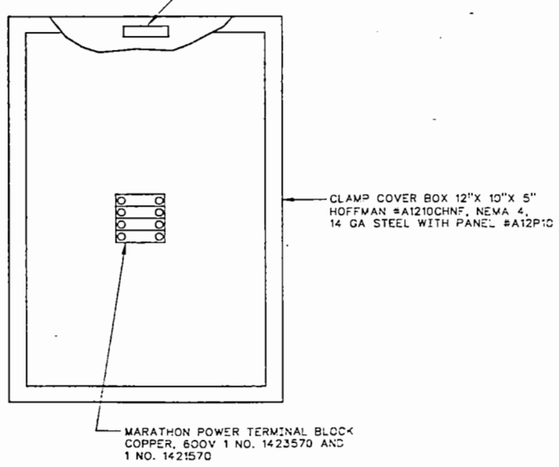

DETAIL 2 / H-2-77638 SH 2
MANHOLE POWER TERM BOX

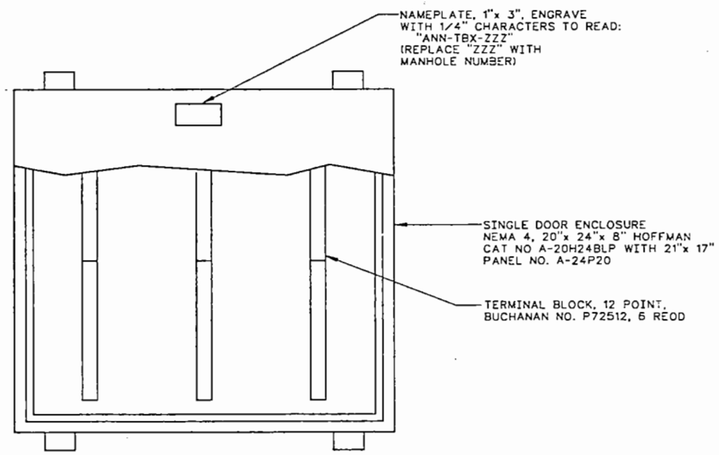

DETAIL 4 / H-2-77638 SH 2
ANN TERMINAL BOX

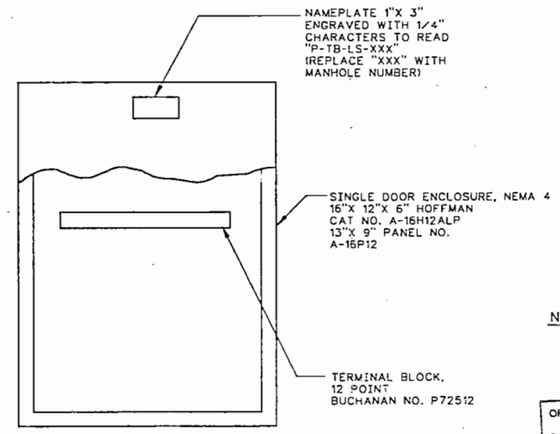

DETAIL 6 / H-2-77638 SH 3
LEACHATE PIT POWER TERMINAL BOX

NOTES:

1. ABBREVIATIONS ARE PER ANSI Y1.1 UNLESS OTHERWISE NOTED.

OFFICIAL RELEASE BY WHC
DATE APR 04 1989

EDT = 101089

H-89 REV 0

IMPACT LEVEL 2

WHC APPROVAL BY SR BRIGGS	DATE 12-28 1988	U.S. DEPARTMENT OF ENERGY RICHLAND OPERATIONS OFFICE	
		KAISER ENGINEERS HANFORD COMPANY	
PROJ ENGR D LOVE	12-28 1988	ELECTRICAL TERMINAL BOX DETAILS	
GA ENGINEER JE BREED	7-14 1988		
APPROVED BY RM ITEN	7-15 1988		
SAFETY D PARTHREE	7-15 1988		
APPROVED BY WCA C SUELETT	7-15 1988	PROJECT TITLE GROUT VAULT PAIR 218-E-16-102 & 103	
CHECKED BY RJ HARMAN	7-15 1988		
DRAWN BY JL BRINKLEY	7-15 1988	PROJ 3-714	WO ER1060
DESIGNED BY WC ATKINS	1-27 1988	SCALE NONE	BLDG 218-E-16
CAD FILE B077637A		DRAWING NUMBER H-2-77637	SHEET 1 1 1 C
CAD SYS 2UJIBM:SCD2:9.0:NN			

NUMBER	TITLE	NUMBER	TITLE
		H-2-77573	DRAWING LIST

DRAWING TRACEABILITY LIST — REFERENCES — NEXT USED 01

BY-DATE	BY-DATE	REV BY DATE	DESCRIPTION	REV
APPROVAL	KEH APPROVAL			

REVISIONS

MICROFILMED — COMMENT REVIEW

KEHCAD

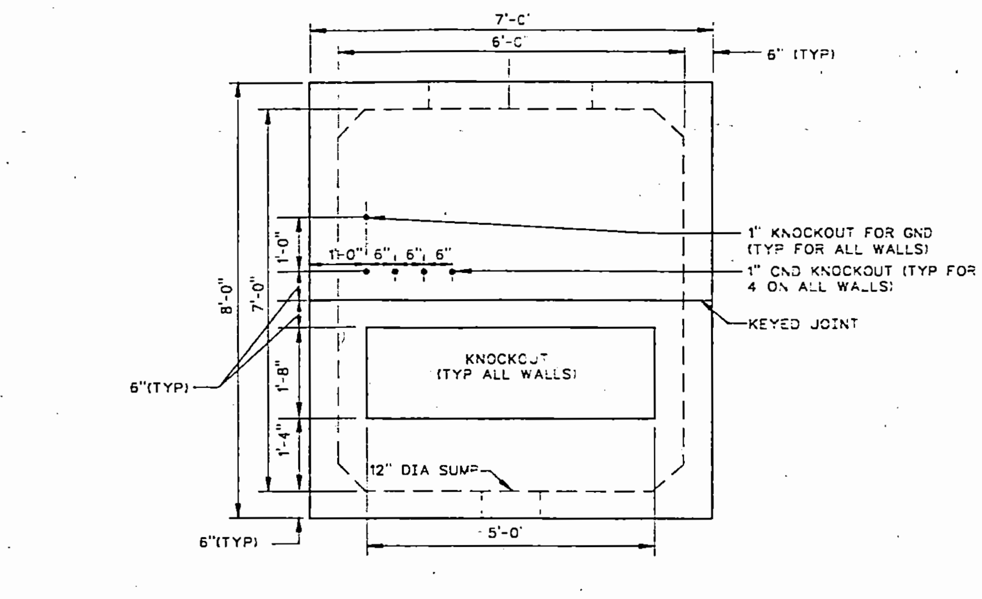

TYPICAL MANHOLE EXTERIOR WALL

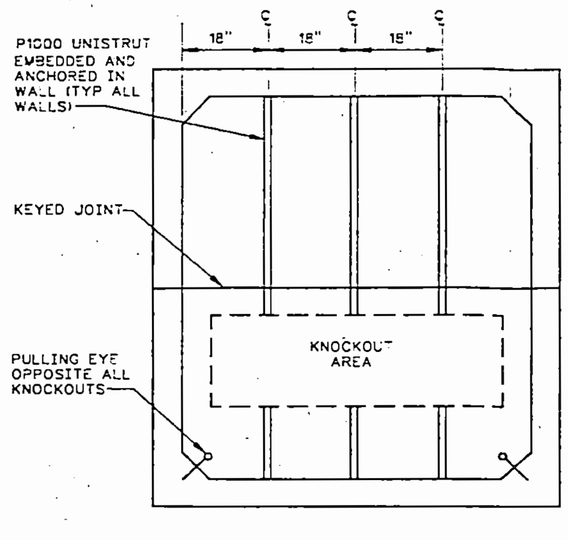

TYPICAL MANHOLE INTERIOR WALL

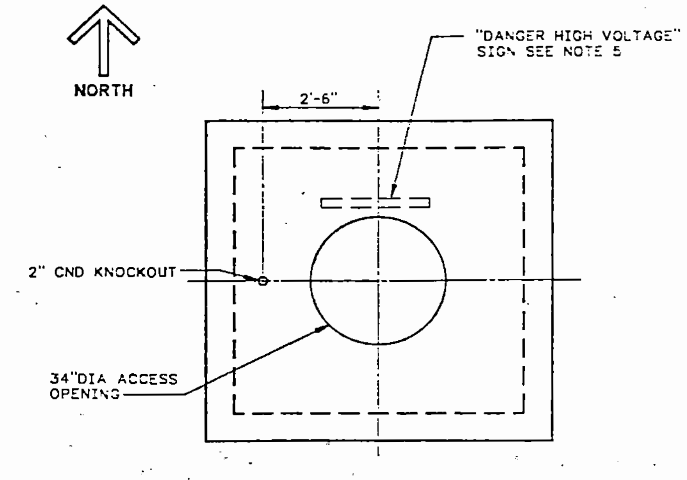

TYPICAL MANHOLE COVER PLAN

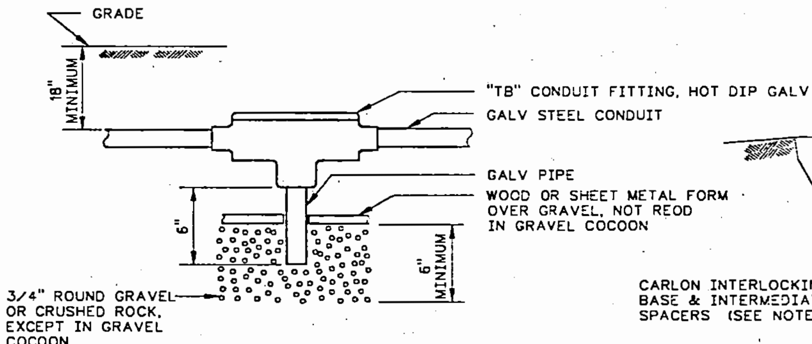

DETAIL (11)
CONDUIT DRAIN (H-2-77635 SH1 & 2)

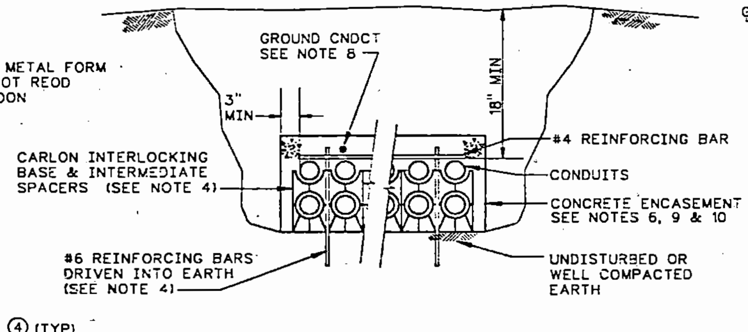

SECTION (H)
TYP ARRANGEMENT FOR CND SUPPORTS & REBAR IN DUCTBANKS

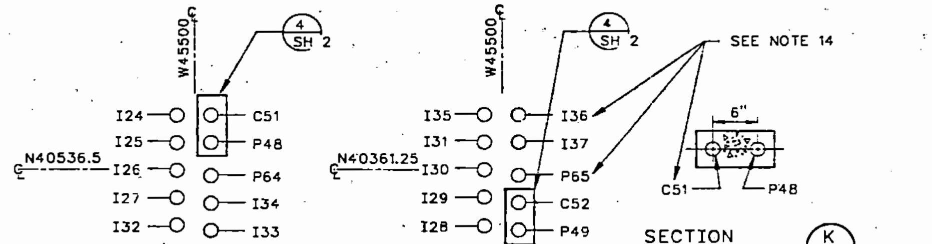

DETAIL (9 / SH 3)
LEACHATE PIT CONTROL STATION 102 STUB-UP

DETAIL (10 / SH 3)
LEACHATE PIT CONTROL STATION 103 STUB-UP

SECTION (K / SH 3)
LEACHATE PIT CONTROL STATION 102 TO MH-102A

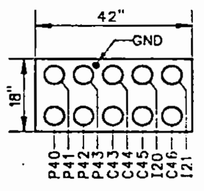

SECTION (A)
MH-103 TO MH-102A (H-2-77634)

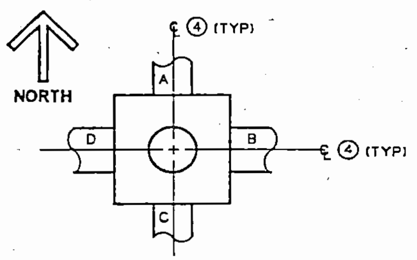

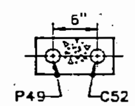

SECTION (J / SH 3)
MH-103A TO LEACH PIT CONTROL STATION 103

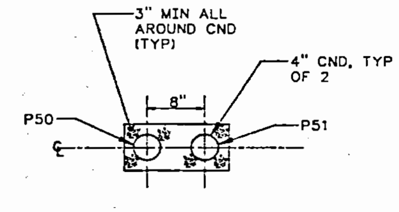

SECTION (D / H-2-77634)

ITEM	6' x 6' x 7' MANHOLE TABULATION*		102*	103*	102A	103A
	MANHOLE NO		102*	103*	102A	103A
(1)	GRADE ELEVATION		670'-0"	670'-0"	656'-4"	656'-4"
(2)	BOTTOM MANHOLE ELEVATION		659'-8"	659'-2"	648'-4"	648'-4"
(3)	46"OD x 7"HGT MH RING & COV				1	1
(4)	DUCTBANK COORDINATES (SEE PLAN FOR ORIENTATION)	A	W45729.58	W45729.58	——	W45479
		B	N40368.33	N40539.5	N40539.5	N40357.5
		C	W45729.58	W45729.58	W45479	
		D	N40368.33	N40539.5	N40539.5	N40357.5
(5)	TOP OF DUCTBANK	A	663'-0"	662'-6"	——	651'-8"
		B	663'-0"	662'-6"	651'-8"	651'-8"
		C	663'-0"	662'-6"	651'-8"	——
		D	663'-C"	662'-6"	651'-8	651'-8"

* FOR EXST MANHOLE INFO, SEE TABULATION ON H-2-98475 SH 3 (MH 102 & 103 FOR REF ONLY)

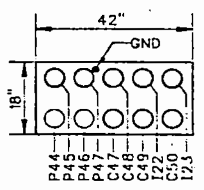

SECTION (C)
MH-102 TO MH-103A (H-2-77634)

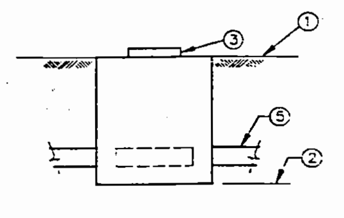

DETAIL (8 / SH 3)
SEE TABULATION

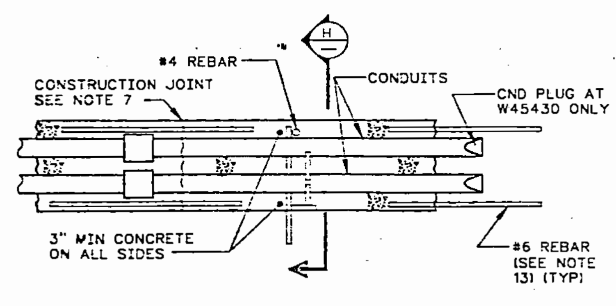

DETAIL (3)
TYP DUCT BANK (H-2-77634)

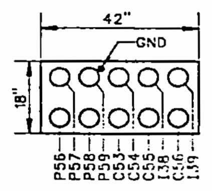

SECTION (L / SH 3)
EAST OF MH-102A

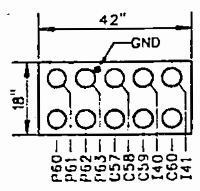

SECTION (M / SH 3)
EAST OF MH-103A

NOTES:

1. ABBREVIATIONS ARE PER ANSI Y1.1 UNLESS OTHERWISE NOTED.
2. DUCTS SHALL BE SLOPED A MINIMUM OF 3" PER 100' TO DRAIN INTO A MANHOLE OR CONDUIT DRAIN EXCEPT AS OTHERWISE NOTED
3. ALL CONDUITS SHALL HAVE A MINIMUM OF 3" SPACING EDGE TO EDGE ALL AROUND.
4. SPACING OF CONDUIT SUPPORTS AND REINFORCING BARS SHALL NOT EXCEED 8'-0". LENGTH VERTICAL BARS SHALL BE AS REQUIRED FOR FIRM ANCHORAGE. THE HORIZONTAL REINFORCING BARS SHALL BE WIRE TIED OR WELDED TO THE VERTICAL DRIVEN BARS. INSTALLATION OF 3 CONDUITS SHALL BE SIMILAR TO THE DETAIL SHOWN EXCEPT THAT THE VERTICAL BARS SHALL BE PLACED AT THE OUTER EDGES OF THE CONDUIT ASSEMBLY.
5. "DANGER HIGH VOLTAGE" SIGN, 14"X 10", MCMASTER CARR CAT NO. 5731T492 TO BE HUNG FROM THE CEILING OF ALL MANHOLES HAVING 13.8 KV IN THEM USING EXPANSION ANCHORS & MOUNTED AT A LOCATION SO THEY WILL BE CONSPICUOUS WHEN MANHOLE COVER IS REMOVED.
6. THE CONCRETE SHALL DEVELOP A MINIMUM COMPRESSIVE STRENGTH OF 3000 PSI IN 28 DAYS. THE MAXIMUM SIZE OF COARSE AGGREGATE SHALL BE 3/4 .
7. AT CONSTRUCTION JOINTS IN ENCASEMENTS, EXCEPT THOSE FOR STEEL CONDUIT, 4' LENGTHS OF #6 REINFORCING BARS SHALL BE PLACED IN EACH CORNER OF THE ENCASEMENT, A MINIMUM OF 2" FROM THE OUTSIDE EDGES AND CENTERED ACROSS THE JOINT.
8. A GROUNDING CABLE SHALL BE INSTALLED IN ENCASEMENTS UNLESS SPECIFIED OTHERWISE. THE CONDUCTOR SHALL BE 5/8" DIAMETER, 7 STRAND SPECIAL LOW CARBON GRADE STEEL CABLE. CABLE COATING SHALL BE CLASS B ZINC IN ACCORDANCE WITH ASTM A 475. THIS CONDUCTOR SHALL BE USED FOR INTERCONNECTION OF GROUNDING GRIDS AND FOR GROUNDING OF CONDUIT RISERS, CABLE SHIELDS, ETC. IT SHALL NOT BE USED FOR THE EQUIPMENT
9. CONCRETE ENCASEMENT REQUIREMENT FOR RIGID NON-METALLIC CONDUIT SHALL BE DELETED FOR CONDUITS APPROVED OR SHOWN ON THE CONSTRUCTION DRAWINGS FOR DIRECT BURIAL IN ACCORDANCE WITH NFPA-NEC 70, ARTICLES 300-5 AND 347.
10. THE CONCRETE CURE REQUIREMENT - BACKFILL OPERATION MAY BEGIN 72 HOURS AFTER CONCRETE POUR. MINIMUM CONCRETE COMPRESSIVE STRENGTH PRIOR TO BACKFILL IS 1500 PSI.
11. WHEN TRANSFORMER IS TO BE MOVED TO NEXT MANHOLE, ELBOW/CABLE ASSEMBLY SHALL BE DISASSEMBLED AND THE CABLE SHALL BE REMOVED FROM CONDUIT FOR REUSE AT NEXT XFMR LOCATION. WHEN CABLE HAS BEEN REINSTALLED THROUGH CONDUIT AT NEXT MANHOLE AT NEW XFMR LOCATION, CABLE SHALL BE RE-CONNECTED TO ELBOW PER LOAD BREAK ELBOW MANUFACTURER RECOMMENDATIONS (BY OTHERS).
12. GROUND CABLES ROUTED WITH DUCT BANKS SHALL BE CONNECTED TOGETHER TO MAKE ONE CONTINUOUS GROUND CABLE WITH CADWELD CONNECTORS IN EACH MANHOLE. FASTEN GROUND CABLES TO FRAMING CHANNEL SUPPORTS USING UNISTRUT 5/8" O.D. TUBE CLAMP CATALOG NUMBER P2014. CADWELD CONNECTORS SHALL BE INSTALLED IN ACCORDANCE WITH MANUFACTURER'S INSTRUCTIONS.
13. AT END OF EXTENDED DUCT BANK AT W45430 #6 REBAR IS TO PROTRUDE APPROX 2 FT BEYOND CONCRETE SO THAT WHEN DUCT BANK IS CONTINUED REBAR CAN BE INCORPORATED INTO NEW CONCRETE ENCASEMENT.
14. CONDUIT NUMBERS PREFIXED WITH "P" ARE POWER CONDUITS "C" ARE CONTROL CONDUITS, "I" ARE INSTRUMENT CONDUITS. SEE WIRE RUN LIST DWG H-2-77641.
15. FOR XFMR FEEDER CABLES, CABLE IS TO BE ROUTED THROUGH 4" DIRECT BURIED CONDUIT SHOWN IN DETAILS 1 & 2, SHEET 3 BEFORE ASSEMBLY WITH ELBOW IN MANHOLE.
16. INSULATED PROTECTIVE CAPS AS PROVIDED BY THE LOADBREAK CENTER MODULE MANUFACTURER SHALL BE INSTALLED ON ALL UNUSED BUSHINGS.
17. SHIELDED CABLE SHALL HAVE STRESS CONE TERMINATIONS MADE IN ACCORDANCE WITH THE INSTRUCTIONS OF THE CABLE MANUFACTURER. THE OUTSIDE LAYER OF TAPE SHALL BE APPLIED TO SHED WATER.
18. THE GROUNDING CONDUCTOR FOR THE 13.8KV LINE SHALL BE NO. 6 BIRMINGHAM WIRE GAUGE, GRADE EBB IRON WIRE WITH CLASS B ZINC COATING. CABLE SHIELD GROUNDS AT THE STRESS CONES SHALL BE CONNECTED TO THE LIGHTNING ARRESTER GROUND.
19. IN PREPARATION FOR FINAL BACKFILL DISCONNECT AND UNPLUG CABLES IN I-TB-LS-102, P-TB-LS-102, I-TB-LS-103 AND P-TB-LS-103 AND PULL BACK TO I-PB-LS-103, P-PB-LS-103, I-PB-LS-103, AND P-PB-LS-103. MOVE TOP 24"X30" PLATE TO TOP OF UNISTRUT AFTER EXTENDING UNISTRUT 13'-6" IN HEIGHT. INSTALL NEW CONDUITS I35B, I36B, I37B, AND P65; I32B, I33B, I34B AND P64B. PULL CABLES BACK INTO CONDUITS AND TERMINAL BOXES AND RECONNECT AS PREVIOUSLY TERMINATED (BY OTHERS).
20. AFTER PULLING LEVEL PROBE CABLE THRU CGB FITTING INTO TERMINAL BOX, INSTALL CONNECTOR THAT WAS REMOVED FROM LEVEL PROBE (SEE DRAWING H-2-77617 NOTE 12) WITH CABLE GRIP ON CABLE COMING FROM LEVEL PROBE AND RECONNECT AS PREVIOUSLY TERMINATED. INSTALL AND TERMINATE CONNECTOR BACK ON TO SHORTEND CABLE. RECONNECT AS PREVIOUSLY TERMINATED.

OFFICIAL RELEASE BY WHC
DATE APR 04 1989

1-7-89
REV 0

EDT # 101089

IMPACT LEVEL 2

NUMBER	TITLE
H-2-98475	ELECTRICAL DETAILS
H-3-881 SH 2	ELEC STD VENTILATED POLE RISER-STL CND
H-2-77573	DRAWING LIST

REFERENCES — DRAWING TRACEABILITY LIST — NEXT USED ON

REV | BY-DATE | BY-DATE | KEH APPROVAL | REV BY DATE | DESCRIPTION — REVISIONS

WHC APPROVAL BY SR BRIGGS	1/20/89 12-28 1988	U.S. DEPARTMENT OF ENERGY RICHLAND OPERATIONS OFFICE
PROJ	12-28 1988	KAISER ENGINEERS HANFORD COMPANY
QA JE BREED	7-14 1988	ELECTRICAL MANHOLE & CONDUIT DETAILS
APPROVED BY RM ITEN	7-13 1988	
SAFETY D PARTHREE	7-11 1988	
APPROVED NCA BY C SUBLETT	7-11 1988	PROJECT TITLE GROUT VAULT PAIR 218-E-16-102 & 103
CHECKED BY RJ HARMAN	7-8 1988	PROJ B714 / WO ER1060 / JOB 242500
DRAWN BY J.L BRINKLEY	3-31 1988	SCALE NONE / BLDG 218-E-16 / INDEX 73[illegible]
DESIGNED BY W.C ATKINS	3-31 1988	
CAD FILE 8077638A		DRAWING NUMBER H-2-77638 / SHEET 1 / OF 3
CAD CODE 2J:IBV:ACD2:9.0:NN		

KEHCAD

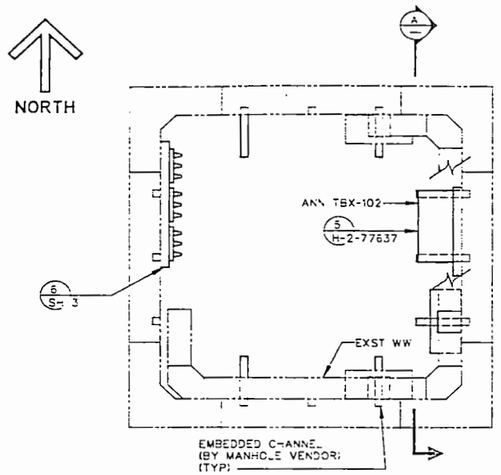

MANHOLE 102

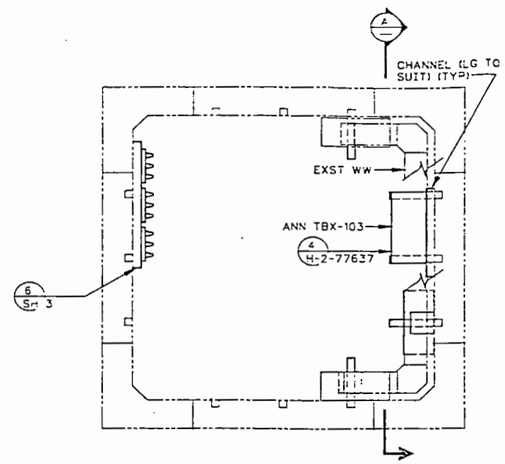

MANHOLE 103

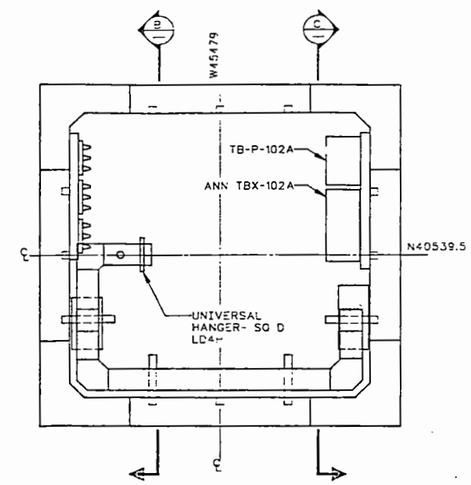

MANHOLE 102A

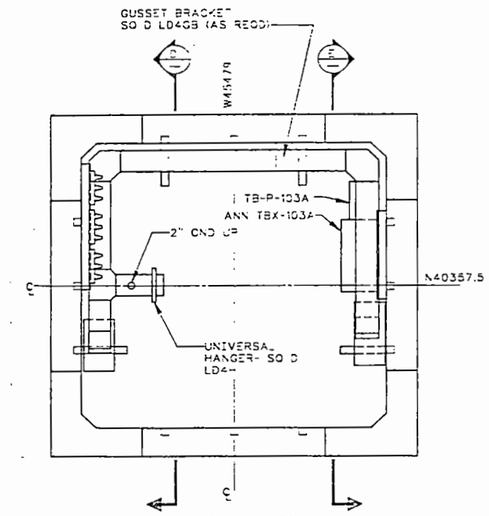

MANHOLE 103A

MANHOLE PLANS

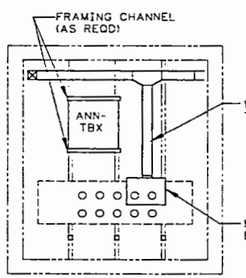

SECTION A

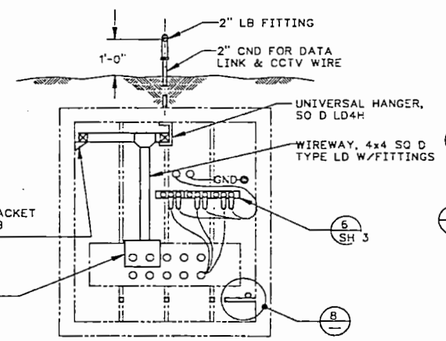

SECTION B

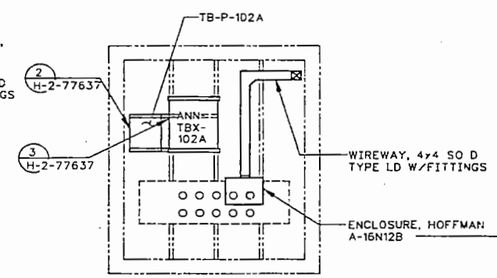

SECTION C

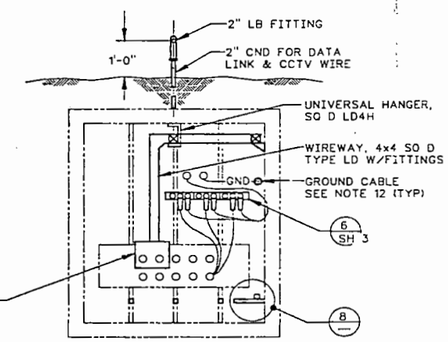

SECTION D

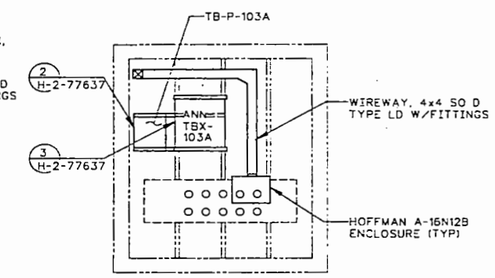

SECTION E

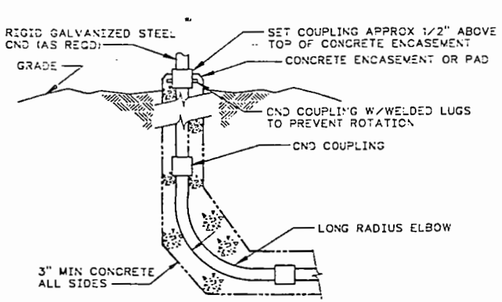

DETAIL 13
CONDUIT STUB-UP
ONE LAYER SHOWN,
SIMILAR FOR 2
LAYERS OF CONDUIT
SH 1 & 3

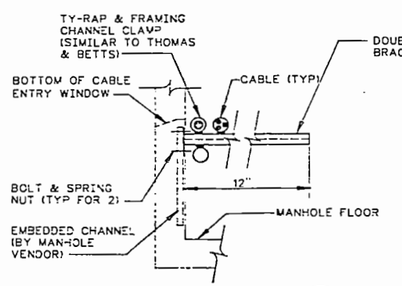

DETAIL 8
METHOD OF CABLE
SUPPORT IN MANHOLE
TYPICAL

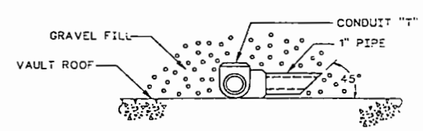

DETAIL 12
VAULT ROOF
CONDUIT DRAIN
H-2-77635 SH 1 & 2

NOTES:
1. FOR NOTES SEE SHEET 1.

OFFICIAL RELEASE
BY WHC
DATE
APR 04 1989

EDT # 101089

IMPACT LEVEL 2

1-7-89
REV 0

WHC APPROVAL	DATE	U.S. DEPARTMENT OF ENERGY RICHLAND OPERATIONS OFFICE
BY SR BRIGGS	12-28-1988	KAISER ENGINEERS HANFORD COMPANY
PROJ ENGR	12-28-1988	ELECTRICAL MANHOLE & CONDUIT DETAILS
QA REVIEW	7-13-1988	
JE BASSO	7-13-1988	
APPROVED BY RW ITEN	7-13-1988	
SAFETY D PARTHREE	7-11-1988	
APPROVED BY C SUBLETT	7-11-1988	PROJECT TITLE GROUT VAULT PAIR 218-E-16-102 & 103
CHECKED BY RJ HARMAN	7-8-1988	
DRAWN BY JT BRINKLEY	3-16-1988	PROJ B714 WO ER106C JOB 240500
DESIGNED BY RJ SALIMBENE	3-16-1988	SCALE NONE BLDG 218-E-16
CAD FILE B0776358		DRAWING NUMBER H-2-77638 SHEET 2 OF 3
CAD DWG		

NUMBER	TITLE	DRAWING LIST NUMBER	TITLE	REFERENCES
DRAWING TRACEABILITY LIST		NEXT USED ON		

BY-DATE	BY-DATE	REV BY DATE	DESCRIPTION	REV
KEH APPROVAL				
APPROVAL		REVISIONS		
COMMENT REVIEW				

MICROFILMED

KEHGAP

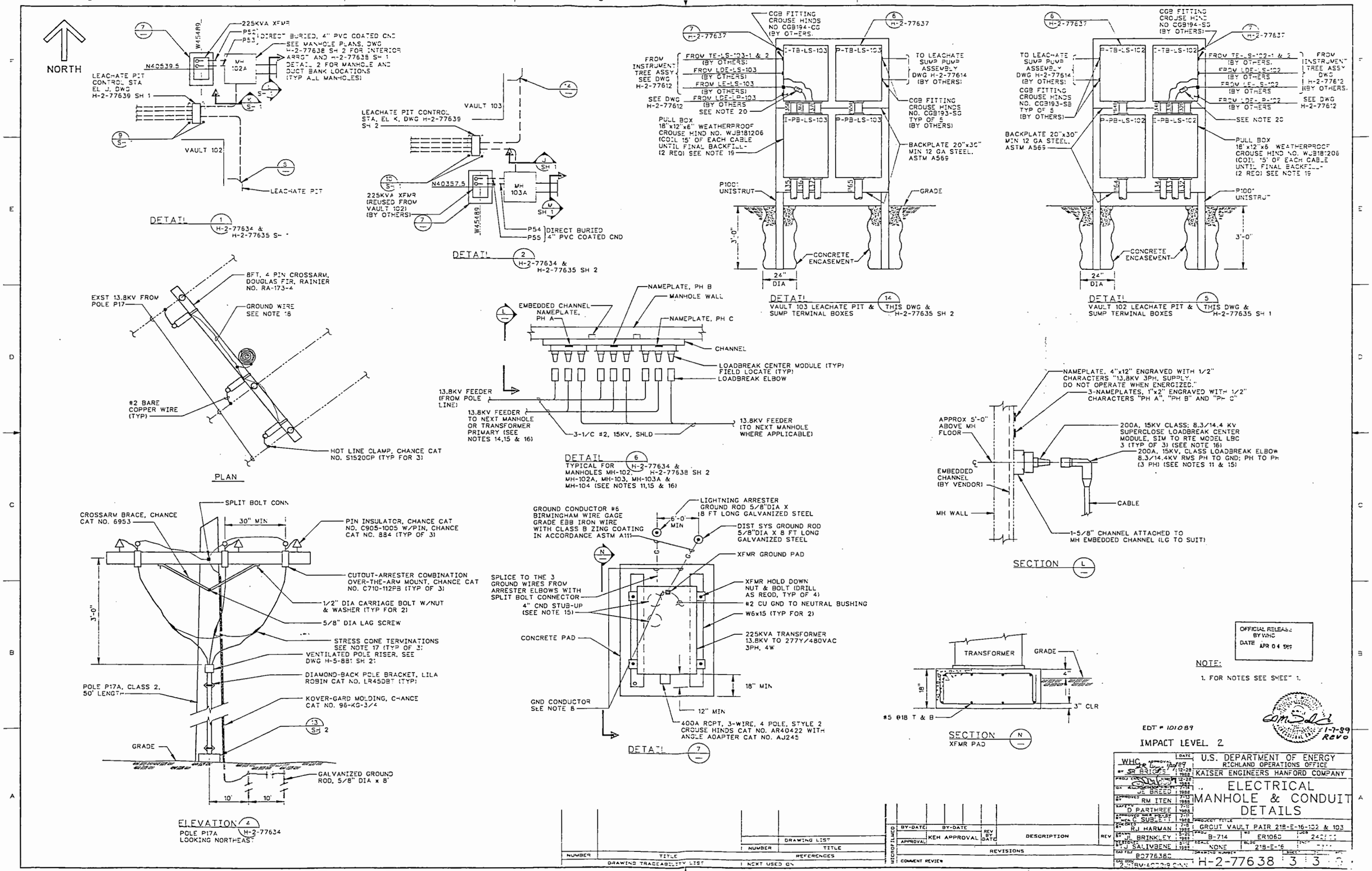
NORTH
225KVA XFMR
P52
P53
DIRECT BURIED, 4" PVC COATED CND
SEE MANHOLE PLANS, DWG H-2-77638 SH 2 FOR INTERIOR
ARRGT AND H-2-77635 SH 1 DETAIL 2 FOR MANHOLE AND DUCT BANK LOCATIONS (TYP ALL MANHOLES)
W45489
N40539.5
MH 102A
LEACHATE PIT CONTROL STA EL J, DWG H-2-77639 SH 1
VAULT 102
LEACHATE PIT
DETAIL 1 H-2-77634 & H-2-77635 SH 1
VAULT 103
LEACHATE PIT CONTROL STA, EL K, DWG H-2-77639 SH 2
N40357.5
MH 103A
225KVA XFMR (REUSED FROM VAULT 102) (BY OTHERS)
W45489
P54
P55
DIRECT BURIED 4" PVC COATED CND
DETAIL 2 H-2-77634 & H-2-77635 SH 2
CGB FITTING CROUSE HINDS NO CGB194-CG (BY OTHERS)
H-2-77637
FROM INSTRUMENT TREE ASSY SEE DWG H-2-77612
FROM TE-LS-103-1 & 2 (BY OTHERS)
FROM LDE-LS-103 (BY OTHERS)
FROM LE-LS-103 (BY OTHERS)
FROM LDE-LP-103 (BY OTHERS SEE NOTE 20
SEE DWG H-2-77612
PULL BOX 18"x12"x6" WEATHERPROOF CROUSE HIND NO. WJB181206 (COIL 15' OF EACH CABLE UNTIL FINAL BACKFILL- (2 REQ) SEE NOTE 19
TO LEACHATE SUMP PUMP ASSEMBLY DWG H-2-77614 (BY OTHERS)
CGB FITTING CROUSE HINDS NO. CGB193-SG TYP OF 5 (BY OTHERS)
BACKPLATE 20"x30" MIN 12 GA STEEL, ASTM A569
P100 UNISTRUT
GRADE
3'-0"
CONCRETE ENCASEMENT
24" DIA
DETAIL 14 VAULT 103 LEACHATE PIT & SUMP TERMINAL BOXES
THIS DWG & H-2-77635 SH 2
CGB FITTING CROUSE HIND NO CGB194-SG (BY OTHERS)
TO LEACHATE SUMP PUMP ASSEMBLY DWG H-2-77614 (BY OTHERS)
CGB FITTING CROUSE HINDS NO. CGB193-SB TYP OF 5 (BY OTHERS)
FROM TE-LS-102-1 & 2 (BY OTHERS)
FROM LDE-LS-102 (BY OTHERS)
FROM LE-LS-102 (BY OTHERS)
FROM LDE-LP-102 (BY OTHERS)
FROM INSTRUMENT TREE ASSY DWG H-2-77612 (BY OTHERS)
SEE DWG H-2-77612
SEE NOTE 20
BACKPLATE 20"x30" MIN 12 GA STEEL, ASTM A569
PULL BOX 18"x12"x6" WEATHERPROOF CROUSE HIND NO. WJB181206 (COIL 15' OF EACH CABLE UNTIL FINAL BACKFILL- (2 REQ) SEE NOTE 19
P100 UNISTRUT
DETAIL 5 VAULT 102 LEACHATE PIT & SUMP TERMINAL BOXES
THIS DWG & H-2-77635 SH 1
8FT, 4 PIN CROSSARM, DOUGLAS FIR, RAINIER NO. RA-173-4
EXST 13.8KV FROM POLE P17
GROUND WIRE SEE NOTE 18
#2 BARE COPPER WIRE (TYP)
HOT LINE CLAMP, CHANCE CAT NO. S1520GP (TYP FOR 3)
PLAN
NAMEPLATE, PH B
MANHOLE WALL
EMBEDDED CHANNEL NAMEPLATE, PH A
NAMEPLATE, PH C
CHANNEL
LOADBREAK CENTER MODULE (TYP) FIELD LOCATE (TYP)
LOADBREAK ELBOW
13.8KV FEEDER (FROM POLE LINE)
13.8KV FEEDER TO NEXT MANHOLE OR TRANSFORMER PRIMARY (SEE NOTES 14,15 & 16)
3-1/C #2, 15KV, SHLD
13.8KV FEEDER (TO NEXT MANHOLE WHERE APPLICABLE)
DETAIL 6 TYPICAL FOR MANHOLES MH-102, MH-102A, MH-103, MH-103A & MH-104 (SEE NOTES 11,15 & 16)
H-2-77634 & H-2-77638 SH 2
NAMEPLATE, 4"x12" ENGRAVED WITH 1/2" CHARACTERS "13.8KV 3PH. SUPPLY. DO NOT OPERATE WHEN ENERGIZED."
3-NAMEPLATES, 1"x2" ENGRAVED WITH 1/2" CHARACTERS "PH A", "PH B" AND "PH C"
APPROX 5'-0" ABOVE MH FLOOR
200A, 15KV CLASS; 8.3/14.4 KV SUPERCLOSE LOADBREAK CENTER MODULE, SIM TO RTE MODEL LBC 3 (TYP OF 3) (SEE NOTE 16)
200A, 15KV, CLASS LOADBREAK ELBOW 8.3/14.4KV RMS PH TO GND; PH TO PH (3 PH) (SEE NOTES 11 & 15)
EMBEDDED CHANNEL (BY VENDOR)
CABLE
MH WALL
1-5/8" CHANNEL ATTACHED TO MH EMBEDDED CHANNEL (LG TO SUIT)
SECTION L
SPLIT BOLT CONN
CROSSARM BRACE, CHANCE CAT NO. 6953
30" MIN
PIN INSULATOR, CHANCE CAT NO. C905-1005 W/PIN, CHANCE CAT NO. 884 (TYP OF 3)
CUTOUT-ARRESTER COMBINATION OVER-THE-ARM MOUNT, CHANCE CAT NO. C710-112PB (TYP OF 3)
1/2" DIA CARRIAGE BOLT W/NUT & WASHER (TYP FOR 2)
5/8" DIA LAG SCREW
STRESS CONE TERMINATIONS SEE NOTE 17 (TYP OF 3)
VENTILATED POLE RISER, SEE DWG H-5-881 SH 2
DIAMOND-BACK POLE BRACKET, LILA ROBIN CAT NO. LR45DBT (TYP)
POLE P17A, CLASS 2, 50' LENGTH
KOVER-GARD MOLDING, CHANCE CAT NO. 96-KG-3/4
SH 2
GRADE
GALVANIZED GROUND ROD, 5/8" DIA x 8'
10'
10'
ELEVATION 4 POLE P17A LOOKING NORTHEAST
H-2-77634
GROUND CONDUCTOR #6 BIRMINGHAM WIRE GAGE GRADE EBB IRON WIRE WITH CLASS B ZINC COATING IN ACCORDANCE ASTM A111
LIGHTNING ARRESTER GROUND ROD 5/8"DIA X 8 FT LONG GALVANIZED STEEL
6'-0" MIN
DIST SYS GROUND ROD 5/8"DIA X 8 FT LONG GALVANIZED STEEL
XFMR GROUND PAD
SPLICE TO THE 3 GROUND WIRES FROM ARRESTER ELBOWS WITH SPLIT BOLT CONNECTOR
4" CND STUB-UP (SEE NOTE 15)
XFMR HOLD DOWN NUT & BOLT (DRILL AS REQD, TYP OF 4)
#2 CU GND TO NEUTRAL BUSHING
W6x15 (TYP FOR 2)
CONCRETE PAD
225KVA TRANSFORMER 13.8KV TO 277Y/480VAC 3PH, 4W
18" MIN
GND CONDUCTOR SEE NOTE 8
12" MIN
400A RCPT, 3-WIRE, 4 POLE, STYLE 2 CROUSE HINDS CAT NO. AR40422 WITH ANGLE ADAPTER CAT NO. AJ245
DETAIL 7
TRANSFORMER
GRADE
4"
18"
3" CLR
#5 @18 T & B
SECTION N XFMR PAD
OFFICIAL RELEASE BY WHC DATE APR 04 1989
NOTE:
1. FOR NOTES SEE SHEET 1.
EDT # 101089
IMPACT LEVEL 2
1-7-89 REV 0
WHC
U.S. DEPARTMENT OF ENERGY
RICHLAND OPERATIONS OFFICE
KAISER ENGINEERS HANFORD COMPANY
ELECTRICAL MANHOLE & CONDUIT DETAILS
GROUT VAULT PAIR 218-E-16-102 & 103
B-714
ER1060
NONE
218-E-16
B0776360
H-2-77638 3 3 0
DRAWING LIST
NUMBER TITLE REFERENCES
DRAWING TRACEABILITY LIST
NEXT USED ON
REVISIONS
DESCRIPTION
KEM APPROVAL
COMMENT REVIEW
MICROFILMED

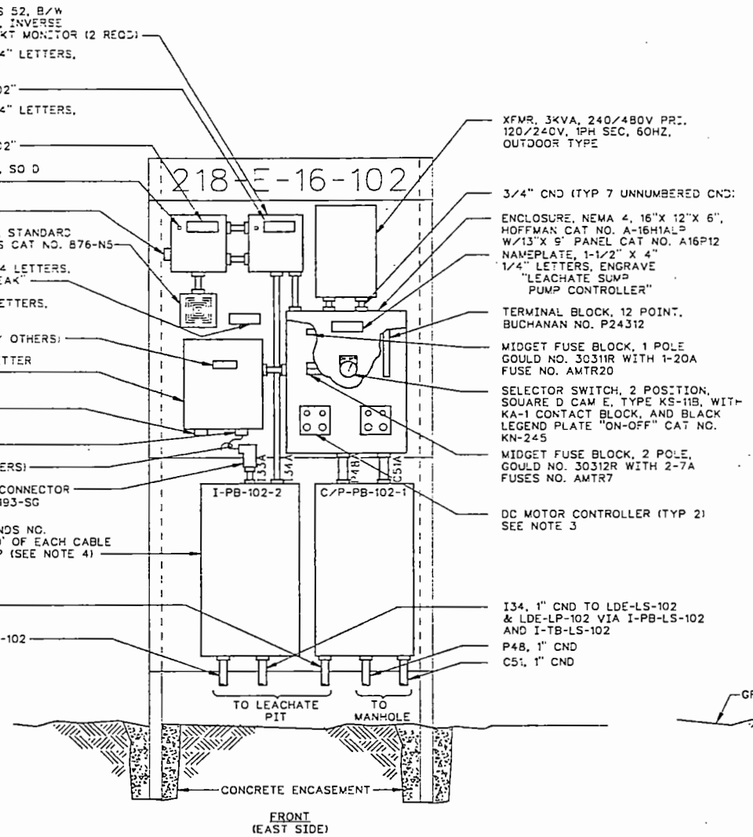

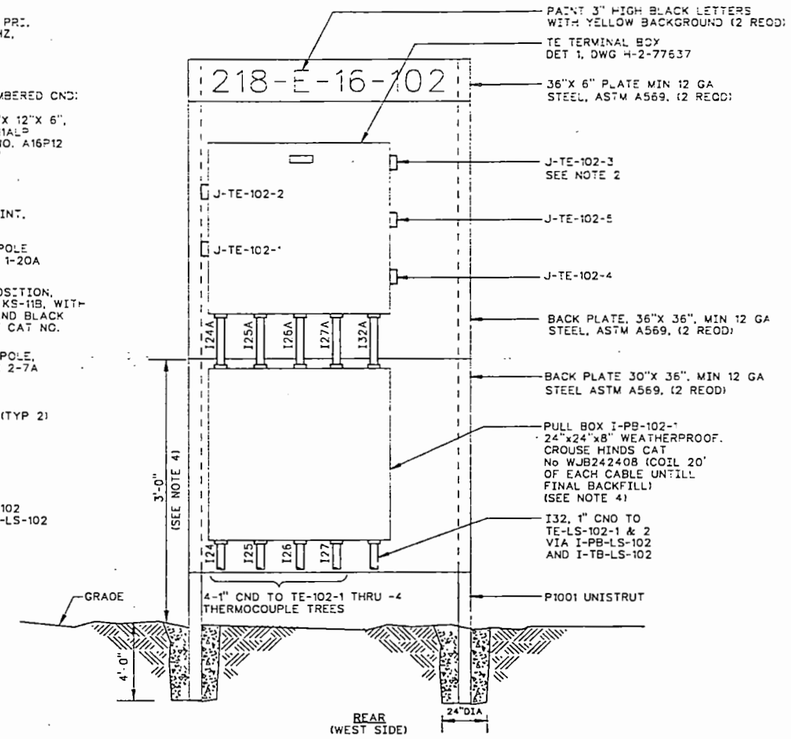

ELEVATION (J)
(SEE DWG H-2-77638 SH 3 DETAIL 9 FOR CONDUIT STUB-UPS) H-2-77638 SH 3

NOTES:

1. ABBREVIATIONS ARE ANSI Y1.1 UNLESS OTHERWISE NOTED.
2. SEE CONNECTOR SCHEDULE, DWG H-2-77642 FOR CONNECTOR & CABLE INFORMATION.
3. DC MOTOR CONTROLLERS TO BE REMOVED FROM PUMPS (PN 9, DWG H-2-77614) AND INSTALLED IN NEMA 4 ENCLOSURE AS SHOWN, ONE CONTROLLER FROM EACH PUMP (BY OTHERS).
4. IN PREPARATION FOR FINAL BACKFILL, DISCONNECT ALL CABLES AND PULL CABLES BACK TO I-PB-102-1, I-PB-102-2, AND C/P-PB-102-1. MOVE 36"x36" MOUNTING PLATES WITH EQUIPMENT AND VAULT IDENTIFICATION SIGNS TO THE TOP OF THE UNISTRUT AFTER EXTENDING UNISTRUT 13'-6" IN HEIGHT. INSTALL NEW CONDUITS I24A, I25A, I26A, I27A, I32A, I33A, I34A, C51A AND P48A. PULL CABLES BACK INTO CONDUITS AND RECONNECT AS PREVIOUSLY TERMINATED. (BY OTHERS)
5. IN PREPARATION FOR FINAL BACKFILL, DISCONNECT ALL CABLES AND PULL CABLES BACK TO I-PB-103-1, I-PB-103-2 AND C/P-PB-103-1. MOVE 36" X 36" MOUNTING PLATES WITH EQUIPMENT AND VAULT IDENTIFICATION SIGNS TO THE TOP OF THE UNISTRUT AFTER EXTENDING UNISTRUT 13'-6" IN HEIGHT. INSTALL NEW CONDUITS I28A, I29A, I30A, I31A, I35A, I36A, I37A, C52A AND P49A. PULL CABLES BACK INTO CONDUITS AND RECONNECT AS PREVIOUSLY TERMINATED. (BY OTHERS)

OFFICIAL RELEASE BY WHC
DATE APR 04 1989

EDT# 101089

1-7-89
REV 0

IMPACT LEVEL 2

WHC		U.S. DEPARTMENT OF ENERGY RICHLAND OPERATIONS OFFICE
		KAISER ENGINEERS HANFORD COMPANY
		ELECTRICAL LEACHATE CONTROL STA 102 DETAILS
RJ HARMAN	7-6-1988	PROJECT TITLE: GROUT VAULT PAIR 218-E-16-102 & 103
JL BRINKLEY	4-4-1988	PROJ. B-714 · WO ER1060 · JOB 24250
WC ATKINS	4-4-1988	SCALE NONE · BLDG 218-E-16
		DRAWING NUMBER H-2-77639 · SHEET 1 OF 2

NUMBER	TITLE
H-2-77573	DRAWING LIST

DRAWING TRACEABILITY LIST

NUMBER	TITLE

REFERENCES

NEXT USED ON

BY-DATE	BY-DATE	REV BY DATE	DESCRIPTION	REV
APPROVAL	KEH APPROVAL			

REVISIONS

COMMENT REVIEW

MICROFILMED

RELEASED

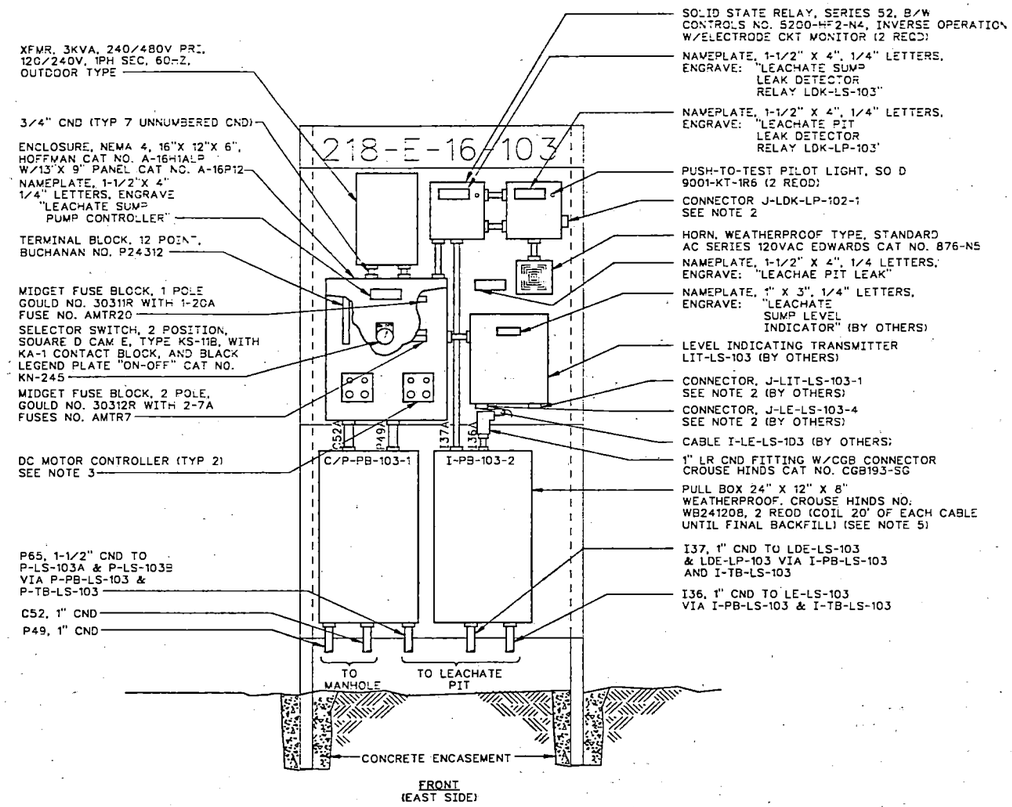

FRONT
(EAST SIDE)

ELEVATION (K) H-2-77638 SH 3
(SEE DWG H-2-77638 SH 3 DETAIL 10 FOR CONDUIT STUB-UPS)

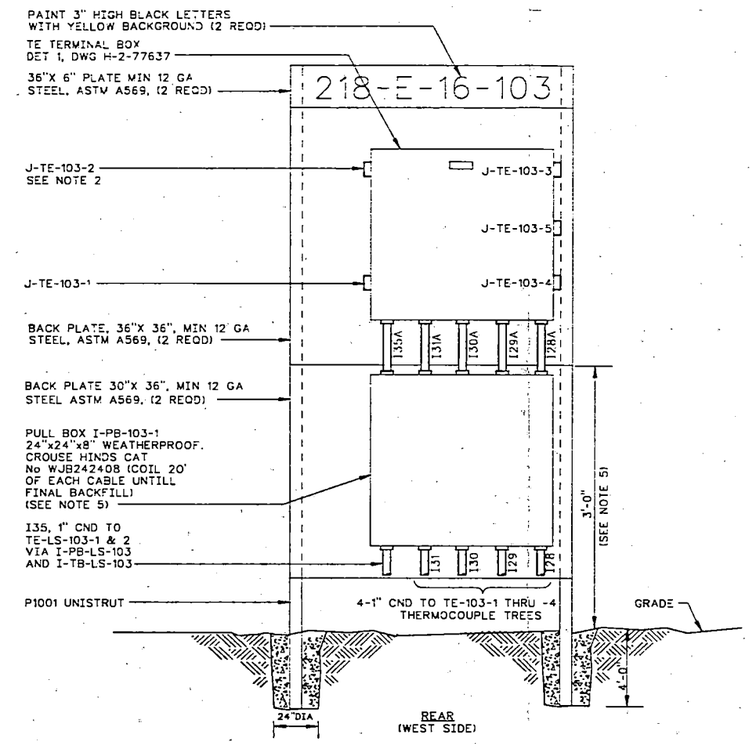

REAR
(WEST SIDE)

NOTE:
FOR NOTES, SEE SH 1.

OFFICIAL RELEASE BY WHC
DATE APR 04 1989

EDT # 101089

1-7-89
REV 0

IMPACT LEVEL 2

WHC APPROVAL BY	DATE	U.S. DEPARTMENT OF ENERGY RICHLAND OPERATIONS OFFICE
		KAISER ENGINEERS HANFORD COMPANY
PROJ ENGR		ELECTRICAL LEACHATE CONTROL STA 103 DETAILS
GR ENGRG		
APPROVED BY RM ITEN		
SAFETY D PARTHREE		
APPROVED BY BECAC SUBLETT		
SCHEDULE RJ HARMAN		PROJECT TITLE GROUT VAULT PAIR 218-E-16-102 & 103
DRAWN BY JL BRINKLEY		PROJ B-714 / BD ER1060 / JOB 242[illegible]
DESIGNED BY WC ATKINS		SCALE NONE / BLDG 218-E-16 / ENGINEER 740[illegible]
CAT NO B0776398		DRAWING NUMBER H-2-77639 / SHEET 2 OF 2

NUMBER	TITLE
DRAWING TRACEABILITY LIST	

NUMBER	TITLE
DRAWING LIST	
REFERENCES	

BY-DATE	BY-DATE	REV BY DATE	DESCRIPTION	REV
APPROVAL	KEH APPROVAL		REVISIONS	

MICROFILMED
COMMENT REVIEW

KEH-AD

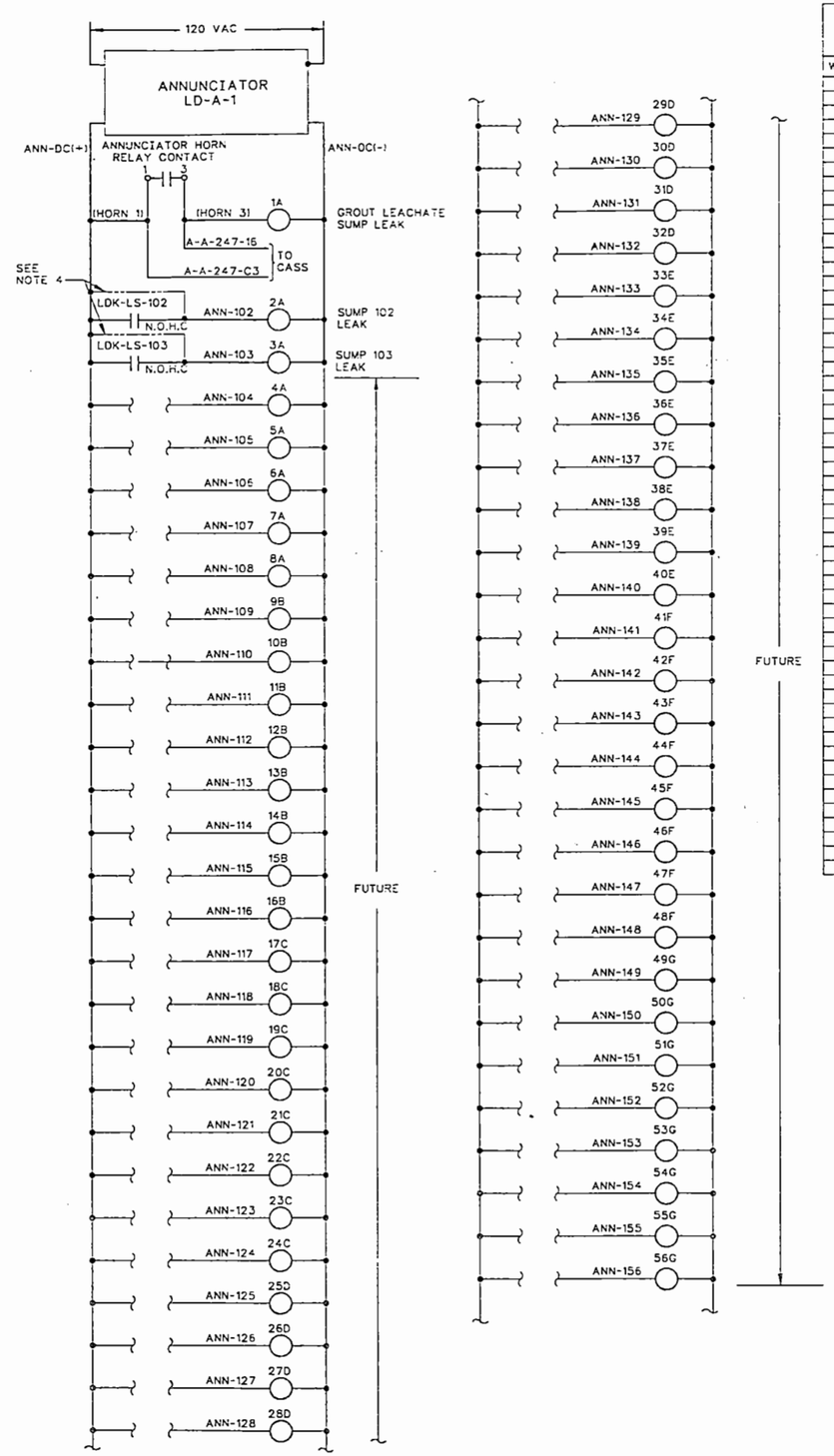

ELEMENTARY DIAGRAM

ANNUNCIATOR WINDOW ENGRAVING CHART
(SEE NOTE 2.

WINDOW	ENGRAVE
1A	GROUT LEACHATE SUMP LIQUID DETECTED
2A	102A SUMP LIQUID DETECTED
3A	103A SUMP LIQUID DETECTED
4A	
5A	
6A	
7A	
8A	
9B	
10B	
11B	
12B	
13B	
14B	
15B	
16B	
17C	
18C	
19C	
20C	
21C	
22C	
23C	
24C	
25D	
26D	
27D	
28D	
29D	
30D	
31D	
32D	
33E	
34E	
35E	
36E	
37E	
38E	
39E	
40E	
41F	
42F	
43F	
44F	
45F	
46F	
47F	
48F	
49G	
50G	
51G	
52G	
53G	
54G	
55G	
56G	

1A	2A	3A	4A	5A	6A	7A	8A
9B	10B	11B	12B	13B	14B	15B	16B
17C	18C	19C	20C	21C	22C	23C	24C
25D	26D	27D	28D	29D	30D	31D	32D
33E	34E	35E	36E	37E	38E	39E	40E
41F	42F	43F	44F	45F	46F	47F	48F
49G	50G	51G	52G	53G	54G	55G	56G

ANNUNCIATOR WINDOW ARRANGEMENT

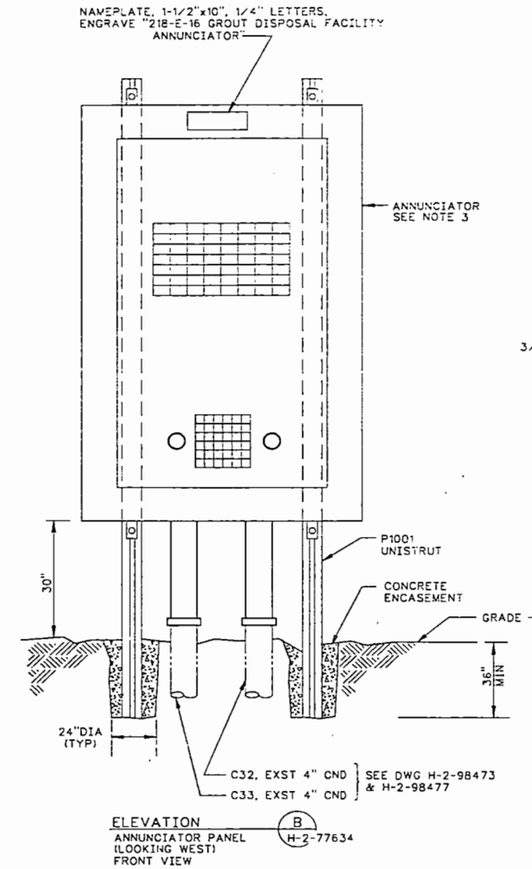

ELEVATION (B) H-2-77634
ANNUNCIATOR PANEL
(LOOKING WEST)
FRONT VIEW

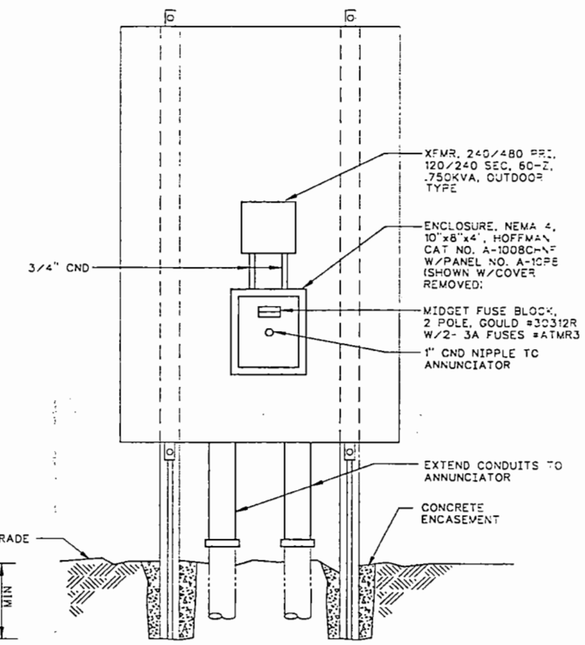

ELEVATION (C) H-2-77634
ANNUNCIATOR PANEL
(LOOKING EAST)
REAR VIEW

ABBREVIATIONS:
N.O.H.C.: NORMALLY OPEN HELD CLOSED.

NOTES:
1. ABBREVIATIONS ARE PER ANSI Y1.1-1972.
2. ENGRAVING ON ANNUNCIATOR WINDOWS SHALL BE 1/4" LETTERS.
3. FOR DESCRIPTION OF ANNUCIATOR, SEE CONSTRUCTION SPECIFICATION B714-C2, SECTION 16400.
4. INSTALL TEMPORARY JUMPER AROUND ALARM CONTACTS DURING VAULT FILL. REMOVE WHEN "FILL" LEACHATE SUMP PUMP WITH HI-HI LEVEL ELEMENT IS REMOVED, AND "PERMANENT" LEACHATE SUMP PUMP IS INSTALLED.

OFFICIAL RELEASE
BY WHC
DATE APR 04 1989

EDT # 101089

1-7-89
REV 0

IMPACT LEVEL 2

WHC	U.S. DEPARTMENT OF ENERGY RICHLAND OPERATIONS OFFICE
KAISER ENGINEERS HANFORD COMPANY	
ELECTRICAL ELEM DIAG LEAK DET ANN	
PROJECT TITLE: GROUT VAULT PAIR 218-E-16-102 & 103	
DRAWN BY: RJ HARMAN	
DESIGNED BY: BRINKLEY	
DESIGNED BY: WC ATKINS	
CAD FILE: B077640A	
DRAWING NUMBER: H-2-77640	
SHEET 1	
REV 0	

NUMBER	TITLE
H-2-98477	ELEC WIRE RUN LIST
H-2-98473	ELEC SITE & VAULT PLAN & DET
H-2-77573	DRAWING LIST

DRAWING TRACEABILITY LIST — REFERENCES — NEXT USED ON

BY-DATE	BY-DATE	REV BY DATE	DESCRIPTION	REV
APPROVAL	KEH APPROVAL			

REVISIONS

MICROFILMED — COMMENT REVIEW

WIRE RUN NO.	NO. OF WIRES	SIZE OF WIRE	TYPE OF WIRE	FROM	VIA	TO	WIRE NUMBERS
GWD50	3-1/C	2	6	POLE P17A	P50	MH 104(LBC)	PH-A, PH-B, PH-C
GWD51	3-1/C	2	6	MH 104(LBC)	EXST P14	MH 103(LBC)	PH-A, PH B, PH-C
GWD52	3-1/C	2	6	MH 103(LBC)	P40	MH 102A(LBC)	PH-A, PH-B, PH-C
GWD53	3-1/C	2	6	MH 102A(LBC)	P53	225KVA TRANSFORMER	PH-A, PH-B, PH-C
GWD54	3-1/C	2	6	MH 103(LBC)	EXST P8	MH 102(LBC)	PH-A, PH-B, PH-C
GWD55	3-1/C	2	6	MH 102(LBC)	P44	MH 103A(LBC)	PH-A, PH-B, PH-C
GWD56	2-25/C	14	9	ANN-TBX-103 (MH 103)	MH 103, EXST C12, MH 102	ANN-TBX-102 (MH 102)	ANN-103 THRU -119,-121,-123,-125,-127,-129,-131,-133,-153 THRU -156,(4)-DC+,(18) SPARE
GWD57	16PR	20	4	TE-102-1 JB	I24, I-PB-102-1, I24A	TE-TBX-102	TE-102-1-1(+) & (-) THRU TE-102-1-16(+) & (-)
GWD58	16PR	20	4	TE-102-2 JB	I25, I-PB-102-1, I25A	TE-TBX-102	TE-102-2-1(+) & (-) THRU TE-102-2-16(+) & (-)
GWD59	16PR	20	4	TE-102-3 JB	I26, I-PB-102-1, I26A	TE-TBX-102	TE-102-3-1(+) & (-) THRU TE-102-3-16(+) & (-)
GWD60	16PR	20	4	TE-102-4 JB	I27, I-PB-102-1, I27A	TE-TBX-102	TE-102-4-1(+) & (-) THRU TE-102-4-16(+) & (-)
GWD61	4PR	20	7	I-TB-LS-102	I32B, I-PB-LS-102, I32, I-PB-102-1, I32A	TE-TBX-102	TE-LS-102-1(+),-1(-),-2(+),-2(-),-SP-1(+),-SP-1(-),-SP-2(+),-SP-2(-)
GWD62	25/C	14	9	ANN-TBX-103 (MH 103)	MH 103, C43, MH 102A	ANN-TBX-102A (MH 102A)	ANN-102,-120,-122,-124,-126,-128,-130,-132,-135,-137,-139,-141,-143,-144,-151,-152,(2)-DC+,(7) SPARE
GWD63	-	-	8	I-TB-LS-102	I33B, I-PB-LS-102, I33, I-PB-102-2, I33A, CABLE CONNECTOR	LIT-LS-102	LIT-LS-102-10,-11 (CABLE INSTALLATION BY OTHERS)
GWD64	3/C	16	2	I-TB-LSL102	I34B, I-PB-LS-102, I34, I-PB-102-2, I34A	LDK-LS-102	LDK-LS-102-14,-14A,-15
GWD65	1	COAX	3	MH 102A WW(CCTV XMTR)	MH 102A WW, I20, MH 103 WW (SEE NOTE 1)	MH 103 WW	I-XC-01A-3
GWD66	2	COAX	3	MH 102A(CCTV XMTR)	MH 102A WW, I20, MH 103 WW, EXST I5, MH 102 WW, EXST I3,	TGE CONTROL ROOM	I-XC-01A-4,-5
					MH 101 WW, EXST I1, SPARE TBX, EXST CND (SEE NOTE 1)		
GWD67	3	COAX	3	MH 103A(CCTV XMTR)	MH 103A WW, I22, MH 102 WW (SEE NOTE 1)	MH 102 WW	I-XC-01A-6,-7,-8
GWD68	6 PR	24	5	MH 102A(DATA LINK)	MH 102A WW, I20, MH 103 WW (SEE NOTE 1)	MH 103 WW	CDL-01-1(+),-1(-),-1(SH) THRU -6(+),-6(-),-6(SH)
GWD69	2-6 PR	24	5	MH 102A(DATA LINK)	MH 102A WW, I20, MH 103 WW, EXST I5, MH 102 WW, EXST I3,	TGE CONTROL ROOM	CDL-01-1(+),-1(-),-1(SH) THRU -6(+),-6(-),-6(SH)
					MH 101 WW, EXST I1, SPARE TBX, EXST CND (SEE NOTE 1)		
GWD70	3-6 PR	24	5	MH 103A(DATA LINK)	MH 103A WW, I22, MH 102 WW (SEE NOTE 1)	MH 102 WW	CDL-01-1(+),-1(-),-1(SH) THRU -6(+),-6(-),-6(SH)
GWD71	4/C	12	2	TB-P-102A (MH 102A)	MH 102A, P48, C/P-PB-102-1, P48A	(102) LEACHATE SUMP PUMP CONTROLLER	D-PB-01-13A,-13B,-13C,GND
GWD72	2/C	12	2	LDK-LS-102	C51A, C/P-PB-102-1, C51, MH 102A	ANN-TBX-102A (MH 102A)	ANN-DC+,ANN-102
GWD73	16PR	20	4	TE-103-1 JB	I28, I-PB-103-1, I28A	TE-TBX-103	TE-103-1-1(+) & (-) THRU TE-103-1-16(+) & (-)
GWD74	16PR	20	4	TE-103-2 JB	I29, I-PB-103-1, I29A	TE-TBX-103	TE-103-2-1(+) & (-) THRU TE-103-2-16(+) & (-)
GWD75	16PR	20	4	TE-103-3 JB	I30, I-PB-103-1, I30A	TE-TBX-103	TE-103-3-1(+) & (-) THRU TE-103-3-16(+) & (-)
GWD76	16PR	20	4	TE-103-4 JB	I31, I-PB-103-1, I31A	TE-TBX-103	TE-103-4-1(+) & (-) THRU TE-103-4-16(+) & (-)
GWD77	4PR	20	7	I-TB-LS-103	I35B, I-PB-LS-103, I35, I-PB-103-1,I35A	TE-TBX-103	TE-LS-103-1(+),-1(-),-2(+),-2(-),-SP-1(+),-SP-1(-),-SP-2(+),-SP-2(-)
GWD78	25/C	14	9	ANN-TBX-102 (MH 102	MH 102, C47, MH 103A	ANN-TBX-103A (MH 103A)	ANN-103,-104,-106,-108,-110,-112,-114,-116,-118,-121,-123,-125,-127,-129,-131,-133,-153,-154,
							(2)-DC+,(5) SPARE
GWD79	-	-	8	I-TB-LS-103	I36B, I-PB-LS-103, I36, I-PB-103-2, I36A, CABLE CONNECTOR	LIT-LS-103	LIT-LS-103-10,-11 (CABLE INSTALLATION BY OTHERS)
GWD80	3/C	16	2	I-TB-LS-103	I37B, I-PB-LS-103, I37, I-PB-103-2, I37A	LDK-LS-103	LDK-LS-103-14,-14A,-15
GWD81	2/C	16	2	ANNUNCIATOR	EXST C33, MH 103, EXST C12, MH 102, EXST C8, MH 101, EXST C5	CASS TBX	A-A-247-16, -C3
GWD82	3	12	1	P-TBX-103 (MH 103)	EXST C33, GROUT FACILITY ANNUN, CND NIPPLE	FUSE ENCLOSURE	D-PB-01-13B,-13C,GND
GWD83	3-25/C	14	9	ANN-TBX-103 (MH 103)	EXST C32	GROUT FACILITY ANNUNCIATOR	ANN-102 THRU -156, (6)-DC+,(14) SPARE
GWD84	3	12	1	FUSE ENCLOSURE	NIPPLE	ANNUNN TRANSFORMER	B,C,GND
GWD85	3	12	1	ANNUN TRANSFORMER	NIPPLE, FUSE ENCLOSURE, NIPPLE	GROUT FACILITY ANNUNCIATOR	AC1,ACN,GND
GWD86	2	12	1	ANNUN HORN RELAY TB	ANNUNCIATOR	ANNUN WINDOW 1A	HORN 1, HORN 2
GWD87	4/C	12	2	TB-P-103A (MH 103A)	MH 103A, P49, C/P-PB-103-1, P49A	(103) LEACHATE SUMP PUMP CONTROLLER	D-PB-01-13A,-13B,-13C,GND
GWD88	2/C	12	2	LDK-LS-103	C52A, C/P-PB-103-1, C52, MH 103A	ANN-TBX-103A (MH 103A)	ANN-DC+,ANN-103
GWD89	4/C	12	2	P-TBX-103(MH 103)	MH 103, P41, MH 102A	TB-P-102A(MH 102A)	D-PB-01-13A,-13B,-13C,GND
GWD90	4/C	12	2	P-TBX-103(MH 103)	MH 103, EXST P6, MH 102	TB-P-102(MH 102)	D-PB-01-13A,-13B,-13C,GND
GWD91	4/C	12	2	P-TBX-102(MH 102)	MH 102, P45, MH 103A	TB-P-103A(MH 103A)	D-PB-01-13A,-13B,-13C,GND
GWD92	2-3/C	12	2	P-TB-LS-102	P64B, P-PB-LS-102, P64, C/P-PB-102, P64A	(102) LEACHATE SUMP PUMP CONTROLLER	P-LS-102A-A(+)-A(-)-GND; P-LS-102B-A(+)-A(-)-GND
GWD93	2-3/C	12	2	P-TB-LS-103	P65B, P-PB-LS-103, P65, C/P-PB-103, P65A	(103) LEACHATE SUMP PUMP CONTROLLER	P-LS-103A-A(+)-A(-)-GND; P-LS-103B-A(+), A(-)-GND
GWD94	3	12	1	(102) LEACHATE SUMP PUMP CONT.	3/4" NIPPLE	(102) 3KVA XFMR PRIMARY	D-PB-01-13A, -13B, GND
GWD95	3	12	1	(102) 3KVA XFMR SECONDARY	3/4" NIPPLE	(102) LEACHATE SUMP PUMP CONTROLLER	AC1, ACN, GND
GWD96	3	12	1	(102) LEACHATE SUMP PUMP CONT.	3/4" NIPPLE	LDK-LS-102	AC1, ACN, GND
GWD97	3	12	1	LDK-LS-102	3/4" NIPPLE	LDK-LP-102	AC1, ACN, GND
GWD98	3	12	1	LDK-LP-102	3/4" NIPPLE	(102) HORN	LDK-LP-102-9, -11
GWD99	3/C	16	2	LDK-LP-102	3/4" NIPPLE, LDK-LS-102, I34A, IP-102-2, I34, I-PB-LS-102, I34B	I-TB-LS-102	LDK-LP-102-14,-14A,-15
GWD100	3	12	1	(102) LEACHATE SUMP PUMP CONT.	3/4" NIPPLE	LIT-102	AC1, ACN, GND (CONDUIT & CABLE INSTALLATION BY OTHERS)
GWD101	3	12	1	(103) LEACHATE SUMP PUMP CONT	3/4" NIPPLE	(103) 3KVA TRANSFORMER PRIMARY	D-PB-01-13A, D-PB-01-13B,-GND
GWD102	3	12	1	(103) 3KVA XFMR SECONDARY	3/4 NIPPLE	(103) LECHATE SUMP PUMP CONTROLLER	AC1, ACN, GND
GWD103	3	12	1	(103) LEACHATE SUMP PUMP CONT.	3/4" NIPPLE	LDK-LS-103	AC1, ACN, GND
GWD104	3	12	1	LKD-LS-103	3/4" NIPPLE	LDK-LP-103	AC1, ACN, GND
GWD105	3	12	1	(103) LEACHATE SUMP PUMP CONT.	3/4" NIPPLE	LIT-LS-103	AC1, ACN, GND (CONDUIT & CABLE INSTALLATION BY OTHERS)
GWD106	3	12	1	LDK-LP-103	3/4" NIPPLE	(103) HORN	LDK-LP-103-9,-11
GWD107	3/C	16	2	LDK-LP-103	3/4" NIPPLE, LDK-LS-103, I37A, IP-103-2, I37, ITB-LS-103, I37B	I-TB-LS-103	LDK-LP-103-14,-14A,-15
GWD108	1	5/8"DIA	10	225KVA XFMR GND PAD	P52	MH-102A GROUND GRID	GND
GWD109	1	5/8"DIA	10	225KVA XFMR GND PAD	P54	MH-103A GROUND GRID	GND (CABLE INSTALLATION BY OTHERS)
GWD110	3-1/C	2	6	MH-103A (LBC)	P55	225KVA TRANSFORMER	PH A, PH B, PH C (CABLE INSTALLATION BY OTHERS)

CONDUIT SCHEDULE

CND NO.	CND SIZE	WIRE RUN NUMBERS
P40	4	GWD52
P41	4"	GWD89
P42	4"	SPARE
P43	4"	SPARE
P44	4	GWD55
P45	4"	GWD91
P46	4"	SPARE
P47	4"	SPARE
P48	1"	GWD71
P48A	1"	GWD71
P49	1"	GWD87
P49A	1	GWD87
P50	4"	GWD50
P51	4"	SPARE
P52	4"	GWD108
P53	4"	GWD53
P54	4	GWD109
P55	4"	GWD110
P56	4"	SPARE
P57	4"	SPARE
P58	4"	SPARE
P59	4	SPARE
P60	4"	SPARE
P61	4"	SPARE
P62	4"	SPARE
P63	4"	SPARE
P64	1-1/2"	GWD92
P64A	1-1/2"	GWD92
P65	1-1/2"	GWD93
P65A	1-1/2"	GWD93
P6*	4"	GWD90
P8*	4"	GWD54
P14*	4"	GWD51
C5*	2"	GWD81
C8*	4"	GWD81
C12*	4"	GWD56,GWD81
C32*	4"	GWD83
C33*	4"	GWD81,GWD82
I1*	2"	GWD66,GWD69
I3*	4"	GWD66,GWD69
I5*	4"	GWD66,GWD69

CONDUIT SCHEDULE

CND NO.	CND SIZE	WIRE RUN NUMBERS
C43	4	GWD62
C44	4	SPARE
C45	4	SPARE
C46	4	SPARE
C47	4	GWD78
C48	4	SPARE
C49	4	SPARE
C50	4	SPARE
C51	1"	GWD72
C51A	1"	GWD72
C52	1"	GWD88
C52A	1"	GWD88
C53	4	SPARE
C54	4	SPARE
C55	4	SPARE
C56	4	SPARE
C57	4	SPARE
C58	4	SPARE
C59	4	SPARE
C60	4	SPARE
I20	4"	GWD65,GWD66,GWD68,GWD69
I21	4"	SPARE
I22	4"	GWD67,GWD70
I23	4"	SPARE
I24	1"	GWD57
I24A	1"	GWD57
I25	1"	GWD58
I25A	1"	GWD58
I26	1"	GWD59
I26A	1"	GWD59
I27	1"	GWD60
I27A	1"	GWD60
I28	1"	GWD73
I28A	1"	GWD73
I29	1"	GWD74
I29A	1"	GWD74
I30	1"	GWD75
I30A	1"	GWD75
I31	1"	GWD76
I31A	1"	GWD76
I32	1"	GWD61
I32A	1"	GWD61
I32B	1"	GWD61
I33	1"	GWD63
I33A	1"	GWD63
I33B	1"	GWD63
I34	1"	GWD64, GWD99
I34A	1"	GWD64, GWD99
I34B	1"	GWD64, GWD99
I35	1"	GWD77
I35A	1"	GWD77
I35B	1"	GWD77
I36	1"	GWD79
I36A	1"	GWD79
I36B	1"	GWD79
I37	1"	GWD80, GWD107
I37A	1"	GWD80, GWD107
I37B	1"	GWD80, GWD107
I38	4"	SPARE
I39	4"	SPARE
I40	4	SPARE
I41	4"	SPARE

*FOR EXST CONDUITS SEE SITE PLAN H-2-98473 & WIRE RUN LIST H-2-98477

NOTES:

1. SEE DRAWINGS H-2-77642 SH 1 & 2 FOR ADDITIONAL DATA LINK AND CCTV CABLE INFORMATION.

ABBREVIATIONS

LBC - LOADBREAK CENTER MODULE

TYPE OF WIRE

1. 1/C XHHW/THHN
2. TYPE TC, 600V ROCKBESTOS FIREWALL III
3. COAXIAL CABLE TYPE RG11, BELDEN NO. 8238
4. 16 PR #20 TYPE K THERMOCOUPLE EXTENSION WIRE, ROCKBESTOS FIREWALL III
5. 6 SH PR #24 STRANDED COMPUTER CABLE, BELDEN NO. 9731
6. 15KV SHIELDED POWER CABLE
7. 4 PR #20 TYPE K THERMOCOUPLE EXTENSION WIRE, ROCKBESTOS FIREWALL III
8. LEVEL PROBE COMES COMPLETE WITH CONNECTING CABLE AND ASSOCIATED CONNECTORS FOR BOTH ENDS
9. 25/C #14 ALPHA XTRA GUARD 2
10. 5/8"DIA, 7 STRAND, SPECIAL LOW CARBON GRADE STEEL CABLE. CABLE COATING SHALL BE CLASS B ZINC IN ACCORDANCE WITH ASTM A475.

OFFICIAL RELEASE BY WHC DATE APR 04 1989

EDT # 101089

IMPACT LEVEL 2

1-7-89 REV 0

NUMBER	TITLE
H-2-98477	ELEC WIRE RUN LIST
H-2-98473	ELEC SITE & VAULT PL & DET
H-2-77573	DRAWING LIST

REFERENCES — NEXT USED ON — DRAWING TRACEABILITY LIST — MICROFILMED — BY-DATE — KEH APPROVAL — APPROVAL — REV BY DATE — DESCRIPTION — REV — REVISIONS — COMMENT REVIEW

WHC APPROVAL BY SR BRIGGS	1/4/89 12-28 1988	U.S. DEPARTMENT OF ENERGY RICHLAND OPERATIONS OFFICE
CLOUD	12-28 1988	KAISER ENGINEERS HANFORD COMPANY
JE BREED	7-14 1988	ELECTRICAL WIRE RUN LIST
APPROVED BY RM ITEN	7-13 1988	
SAFETY D PARTHREE	7-11 1988	
APPROVED BY C SUBLETT	7-11 1988	PROJECT TITLE: GROUT VAULT PAIR 218-E-16-102 & 103
CHECKED BY RJ HARMAN	7-11 1988	PROJ B-714 / WO ER1060
DRAWN BY JL BRINKLEY	7-5 1988	SCALE NONE / BLDG 218-E-16
DESIGNED BY JL BRINKLEY	6-30 1988	DRAWING NUMBER H-2-77641 / SHEET 1 OF 1
CAD FILE B077641A		

CONNECTOR SCHEDULE (SEE NOTE 9)

EQUIPMENT				CONNECTING CABLE						EQUIPMENT		
DEVICE	NAME	CONN NO	CONN TYPE	CABLE NO	CONN NO	CONN TYPE	CABLE	CONN NO	CONN TYPE	NAME	CONN NO	CONN TYPE
VAULT TEMPERATURE ELEMENT TREES TE TERMINAL BOX DWG H-2-77637 DETAIL 1	TE-102-1 (TE-102-1-1 THRU -16)	J-TE-102-1 TE TERM BOX	PV-72L18-32SL W/CAP & CHAIN SEE NOTE 3	I-TE-101	EXISTING CABLES TO BE USED FROM PREVIOUS VAULT SEE DWG H-2-98478 SH 1 FOR CABLES AND CONNECTIONS TO PORTABLE INSTR HOUSE. (BY OTHERS)							
	TE-102-2 (TE-102-2(1 THRU 16)	J-TE-102-2 TE TERM BOX	PV-72L18-32SL W/CAP & CHAIN SEE NOTE 3	I-TE-102								
	TE-102-3 (TE-102-3(1 THRU 16)	J-TE-102-3 TE TERM BOX	PV-72L18-32SL W/CAP & CHAIN SEE NOTE 3	I-TE-103								
	TE-102-4 (TE-102-4(1 THRU 16)	J-TE-102-4 TE TERM BOX	PV-72L18-32SL W/CAP & CHAIN SEE NOTE 3	I-TE-104								
EXCESS WATER REMOVAL PUMPS DWG H-2-77606	P-EW-01 (BY OTHERS)	J-P-P-EW-01-1	CA-3101E-24-22P-F80 W/CAP & CHAIN (NIC)	P-P-EW-01	J-P-P-EW-01-2	CA-3106F-24-22S-F80 W/CAP & CHAIN	4/C #10 TYPE TC X 125' LG ROCKBESTOS FIREWALL III	J-P-P-EW-01-3	CA-3106F-24-22P-F80 W/CAP & CHAIN	PORTABLE INSTR HOUSE	J-P-P-EW-01-4 (JB-PIH-1)	CA-3102E-24-22S-F80 W/CAP & CHAIN (NIC)
		J-C-P-EW-01-1	CA-3101E-24-16S-8P-F80 W/CAP & CHAIN (NIC)	C-P-EW-01	J-C-P-EW-01-2	CA-3106F-16S-8S-F80 W/CAP & CHAIN	5/C #16 TYPE TC X 125' LG ROCKBESTOS FIREWALL III	J-C-P-EW-01-3	CA-3106F-16S-8P-F80 W/CAP & CHAIN		J-C-P-EW-01-4 (JB-PIH-2)	CA-3102E-16S-8S-F80 W/CAP & CHAIN (NIC)
	P-EW-02 (BY OTHERS)	J-P-P-EW-02-1	CA-3101E-24-22P-F80 W/CAP & CHAIN (NIC)	P-P-EW-02	J-P-P-EW-02-2	CA-3106F-24-22S-F80 W/CAP & CHAIN	4/C #10 TYPE TC X 125' LG ROCKBESTOS FIREWALL III	J-P-P-EW-02-3	CA-3106F-24-22P-F80 W/CAP & CHAIN		J-P-P-EW-02-4 (JB-PIH-1)	CA-3102E-24-22S-F80 W/CAP & CHAIN
		J-C-P-EW-02-1	CA-3101E-24-16S-8P-F80 W/CAP & CHAIN (NIC)	C-P-EW-02	J-C-P-EW-02-2	CA-3106F-16S-8S-F80 W/CAP & CHAIN	5/C #16 TYPE TC X 125' LG ROCKBESTOS FIREWALL III	J-C-P-EW-02-3	CA-3106F-16S-8P-F80 W/CAP & CHAIN		J-C-P-EW-02-4 (JB-PIH-2)	CA-3102E-16S-8S-F80 W/CAP & CHAIN (NIC)
	P-EW-03 (BY OTHERS)	J-P-P-EW-03-1	CA-3101E-24-22P-F80 W/CAP & CHAIN (NIC)	P-P-EW-03	J-P-P-EW-03-2	CA-3106F-24-22S-F80 W/CAP & CHAIN	4/C #10 TYPE TC X 125' LG ROCKBESTOS FIREWALL III	J-P-P-EW-03-3	CA-3106F-24-22P-F80 W/CAP & CHAIN		J-P-P-EW-03-4 (JB-PIH-1)	CA-3102E-24-22S-F80 W/CAP & CHAIN (NIC)
		J-C-P-EW-03-1	CA-3101E-24-16S-8P-F80 W/CAP & CHAIN (NIC)	C-P-EW-03	J-C-P-EW-03-2	CA-3106F-16S-8S-F80 W/CAP & CHAIN	5/C #16 TYPE TC X 125' LG ROCKBESTOS FIREWALL III	J-C-P-EW-03-3	CA-3106F-16S-8P-F80 W/CAP & CHAIN		J-C-P-EW-03-4 (JB-PIH-2)	CA-3102E-16S-8S-F80 W/CAP & CHAIN (NIC)
	P-EW-04 (BY OTHERS)	J-P-P-EW-04-1	CA-3101E-24-22P-F80 W/CAP & CHAIN (NIC)	P-P-EW-04	J-P-P-EW-04-2	CA-3106F-24-22S-F80 W/CAP & CHAIN	4/C #10 TYPE TC X 125' LG ROCKBESTOS FIREWALL III	J-P-P-EW-04-3	CA-3106F-24-22P-F80 W/CAP & CHAIN		J-P-P-EW-04-4 (JB-PIH-1)	CA-3102E-24-22S-F80 W/CAP & CHAIN (NIC)
		J-C-P-EW-04-1	CA-3101E-24-16S-8P-F80 W/CAP & CHAIN (NIC)	C-P-EW-04	J-C-P-EW-04-2	CA-3106F-16S-8S-F80 W/CAP & CHAIN	5/C #16 TYPE TC X 125' LG ROCKBESTOS FIREWALL III	J-C-P-EW-04-3	CA-3106F-16S-8P-F80 W/CAP & CHAIN		J-C-P-EW-04-4 (JB-PIH-2)	CA-3102E-16S-8S-F80 W/CAP & CHAIN (NIC)
LEACHATE SUMP LEVEL DWG H-2-77617 & H-2-77616	LE-LS-102 (LEACH LEVEL)	J-LE-LS-102-1	SEE NOTE 2	I-LE-LS-102	J-LE-LS-102-2	———	SEE NOTE 2	J-LE-LS-102-3	SEE NOTE 2	LIT-LS-102 XMTR	J-LE-LS-102-4	SEE NOTE 2
	LIT-LS-102 (XMTR) (BY OTHERS)	J-LIT-LS-102-1	CA-3102E-16S-5P-F80 W/CAP & CHAIN (BY OTHERS)	C-LIT-101	EXISTING CABLE TO BE USED FROM PREVIOUS VAULT SEE DWG H-2-98478 SH 2 FOR CABLE & CONN TO PORTABLE INSTR HOUSE (BY OTHERS)							
LEACHATE PIT LEAK DWG H-2-77612	LDK-LP-102 (LEAK DET RELAY)	J-LDK-LP-102-1	CA-3102E-14S-7P-F80 W/CAP & CHAIN	C-LDK-LP-01	J-LDK-LP-01-2	CA-3106F-14S-7S-F80	3/C #16 TYPE TC X 125' LG ROCKBESTOS FIREWALL III	J-LDK-LP-01-3	CA-3106F-14S-7P-F80	PORTABLE INSTR HOUSE	J-LDK-LP-01-4 (JB-PIH-2)	CA-3102E-14S-7S-F80 W/CAP & CHAIN (NOT IN CONTRACT)
LEACHATE SUMP PUMP DWG H-2-77616	P-LS-01 (BY OTHERS)	J-P-P-LS-01-1(PWR)	CA-3101E-24-22P-F80 W/CAP & CHAIN (BY OTHERS)	P-P-LS-01(PWR)	J-P-P-LS-01-2	CA-3106F-24-2S-F80 W/CAP & CHAIN	4/C #10 TYPE TC X 125' LG ROCKBESTOS FIREWALL III	J-P-P-LS-01-3	CA-3106F-24-22P-F80 W/CAP & CHAIN	PORTABLE INSTR HOUSE	J-P-P-LS-01-4 (JB-PIH-1)	CA-3102E-24-22S-F80 W/CAP & CHAIN (NOT IN CONTRACT)
		J-C-P-LS-01-1(CONT)	CA-3101E-16S-8P-F80 W/CAP & CHAIN (BY OTHERS)	C-P-LS-01(CONT)	J-C-P-LS-01-2	CA-3106F-16S-8S-F80 W/CAP & CHAIN	5/C #16 TYPE TC X 125' LG ROCKBESTOS FIREWALL III	J-C-P-LS-01-3	CA-3106F-16S-8P-F80 W/CAP & CHAIN		J-C-P-LS-01-4 (JB-PIH-2)	CA-3102E-16S-8S-F80 W/CAP & CHAIN (NOT IN CONTRACT)
LEACHATE SUMP HIGH HIGH LEVEL DWG H-2-77616	LE-LS-01 (BY OTHERS)	J-LE-LS-01-1	CA-3101E-14S-7P-F80 (BY OTHERS)	C-LE-LS-01	J-LE-LS-01-2	CA-3106F-14S-7S-F80	3/C #16 TYPE TC X 125' LG ROCKBESTOS FIREWALL III	J-LE-LS-01-3	CA-3106F-14S-7P-F80	PORTABLE INSTR HOUSE	J-LE-LS-01-4 (J-PIH-2)	CA-3102-14S-7S-F80 (NOT IN CONTRACT)
EV DIVERTER VALVE MOV-8 DWG H-2-77603	MOV-8 (PWR & CONTROL) (BY OTHERS)	J-MOV-8-1	CA-3101E-24A24P-F80 (BY OTHERS)	C-MOV-8	J-MOV-8-2	CA-3106F-24A24S-F80	9/C #12 TYPE TC X 125' LG ROCKBESTOS FIREWALL III	J-MOV-8-3	CA-3106F-24A24P-F80	PORTABLE INSTR HOUSE	J-MOV-8-4 (JB-PIH-2)	CA-3102-24A24S-F80 (NOT IN CONTRACT)
DATA LINK H-2-98468 SH 2	EXST CONN J-CDL-01-1 ON PIH(J-PIH-3) SEE DWG H-2-98478 SH 2			EXST CABLE I-CDL-01-1 SEE DWG H-2-98478 SH 2 (BY OTHERS)						MANHOLE MH-102A WW (CONT Z 7D)	———	———
	MANHOLE MH-102A WW	———	———	I-CDL-01-3	J-CDL-01-5	CA-PV76L-14-18P W/TYPE S BACKSHELL	6 TW SH PR #24 BELDEN NO. 9731 (LENGTH AS REQD)	J-CDL-01-6	CA-PV71L-14-18S W/TYPE S BACKSHELL	MANHOLE MH-103 WW (SEE NOTES 4 & 5)	———	———
	MANHOLE MH-102A WW	———	———	I-CDL-01-4	J-CDL-01-7	CA-PV76L-14-18P W/TYPE S BACKSHELL	6 TW SH PR #24 BELDEN NO. 9731 (LENGTH AS REQD)	———	———	TO TGE CONTROL ROOM (SEE NOTES 5 & 6)	———	———
	MANHOLE MH-102A WW	———	———	I-CDL-01-5	J-CDL-01-9	CA-PV76L-14-18P W/TYPE S BACKSHELL	6 TW SH PR #24 BELDEN NO. 9731 (LENGTH AS REQD)	———	———	TO TGE CONTROL ROOM (SEE NOTES 5 & 6)	———	———
CLOSED CIRCUIT TELEVISION H-2-98468 SH 1	EXST CONN J-XC-01A-1 ON PIH(J-PIH-3) SEE DWG H-2-98478 SH 1			EXST CABLE I-XC-01A-1 SEE DWG H-2-98478 SH 1 (BY OTHERS)						MANHOLE MH-102A WW (CONT Z 7D)		
	MANHOLE MH-102A WW	———	———	I-XC-01A-3	J-XC-01A-5	PL-259	COAX CABLE RG-11 BELDEN #8238 LENGTH AS REQD	J-XC-01A-6	PL-259	MANHOLE MH-103 WW (SEE NOTE 7)		
	MANHOLE MH-102A WW	———	———	I-XC-01A-4	J-XC-01A-7	PL-259	COAX CABLE RG-11 BELDEN #8238 LENGTH AS REQD	J-XC-01A-8	PL-259	TO TGE CONTROL ROOM (SEE NOTES 8)		
	MANHOLE MH-102A WW	———	———	I-XC-01A-5	J-XC-01A-9	PL-259	COAX CABLE RG-11 BELDEN #8238 LENGTH AS REQD	J-XC-01A-10	PL-259	TO TGE CONTROL ROOM (SEE NOTES 8)		

NOTES:

1. ABBREVIATIONS ARE PER ANSI Y1.1 UNLESS OTHERWISE NOTED.
2. LEVEL PROBE COMES COMPLETE WITH CONNECTING CABLE AND ASSOCIATED CONNECTORS FOR BOTH ENDS (BY OTHERS).
3. THERMOCOUPLE CONNECTORS TO HAVE CHROMEL PINS ITT CANNON NO. 030-1832-0000 AND SOCKETS NO. 031-1014-000 IN POSITIONS A,C,E,G,J,L,N,R,T,V,X,Z,b,c,f & h. ALUMEL PINS ITT CANNON NO. 030-1831-000 AND SOCKETS NO. 031-1013-000 IN POSITIONS B,D,F,H, K,M,P,S,U,W,Y,a,c,e,g & j.
4. CABLE C-CDL-01-3 TO BE CONNECTED TO EXISTING CABLE C-CDL-01-2 AT MANHOLE MH-103 WHICH CONTINUES TO TGE CONTROL ROOM SEE DWG H-2-98478 SH 2.
5. ALL DATA LINK CONNECTORS TO BE ENCAPSULATED WITH GENERAL ELECTRIC RTV-125 N SIL SEALANT
6. CABLES I-CDL-01-4 & I-CDL-01-5 BETWEEN MANHOLE MH-103-A AND TGE CONTROL ROOM TO BE SPLICED AT MANHOLES MH-103 AND MH-102 USING ITT CANNON PV-7614-18P CONNECTORS WITH TYPE S BACKSHELL AT BOTH MANHOLES.
7. CABLE I-XC-01A-3 TO BE CONNECTED TO EXISTING CABLE I-XC-01A-2 AT MANHOLE MH-103 WHICH CONTINUES TO TGE CONTROL ROOM USING ADAPTER NO. PL-258, SEE DWG H-2-98478 SH 1.
8. CABLES I-XC-01A-4 & I-XC-01A-5 TO BE SPLICED AT MANHOLE MH-103 AND USING MH-102 CONNECTORS NO. PL-259 & ADAPTER NO. PL-258.
9. ALL CONNECTORS ARE ITT CANNON EXCEPT THE CCTV CONNECTORS WHICH ARE KING ELECTRONICS.
10. DATA LINK CABLES I-CDL-01-6,-7 & -8 TO END AT MANHOLE MH-102 WIREWAY.
11. ONE OF THE DATA LINK CABLES TO BE CONNECTED TO ONE OF THE EXISTING DATA LINK CABLES AT MANHOLE MH-102 WHICH CONTINUES TO TGE CONTROL ROOM, SEE DWG H-2-98478 SH 2 (BY OTHERS).
12. CCTV CABLES I-XC-01A-6, -7, & -8 TO END AT MANHOLE MH-102 WIREWAY FOR CONNECTIONS TO FUTURE VAULTS.
13. ONE OF THE CCTV CABLES TO BE CONNECTED TO ONE OF THE EXISTING CCTV CABLES AT MANHOLE MH-102 USING ADAPTER NO. PL-258 WHICH CONTINUES TO TGE CONTROL ROOM. SEE DWG H-2-98478 SH 1 (BY OTHERS).

CONNECTOR TERMINATION CHART

DEVICE	CONNECTOR NO	WIRE PREFIX NO.	A	B	C	D	E	F	G	H	J	K	L	M	N	P	R	S	T	U	V	W	X	Y	Z	a	b	c	d	e	f	g	h	j
VAULT TEMPERATURE ELEMENTS	J-TE-102-1	TE-102-1	1(+)	1(-)	2(+)	2(-)	3(+)	3(-)	4(+)	4(-)	5(+)	5(-)	6(+)	6(-)	7(+)	7(-)	8(+)	8(-)	9(+)	10(-)	10(+)	10(-)	11(+)	11(-)	12(+)	12(-)	13(+)	13(-)	14(+)	14(-)	15(+)	15(-)	16(+)	16(-)
	J-TE-102-2	TE-102-2	1(+)	1(-)	2(+)	2(-)	3(+)	3(-)	4(+)	4(-)	5(+)	5(-)	6(+)	6(-)	7(+)	7(-)	8(+)	8(-)	9(+)	10(-)	10(+)	10(-)	11(+)	11(-)	12(+)	12(-)	13(+)	13(-)	14(+)	14(-)	15(+)	15(-)	16(+)	16(-)
	J-TE-102-3	TE-102-3	1(+)	1(-)	2(+)	2(-)	3(+)	3(-)	4(+)	4(-)	5(+)	5(-)	6(+)	6(-)	7(+)	7(-)	8(+)	8(-)	9(+)	10(-)	10(+)	10(-)	11(+)	11(-)	12(+)	12(-)	13(+)	13(-)	14(+)	14(-)	15(+)	15(-)	16(+)	16(-)
	J-TE-102-4	TE-102-4	1(+)	1(-)	2(-)	2(-)	3(+)	3(-)	4(-)	4(-)	5(+)	5(-)	6(-)	6(-)	7(+)	7(-)	8(+)	8(-)	9(+)	10(-)	10(-)	10(-)	11(+)	11(-)	12(+)	12(-)	13(+)	13(-)	14(+)	14(-)	15(+)	15(-)	16(+)	16(-)
DATA LINK	J-CDL-01-5,-6,-7, & -9	CDL-01	1(+)	1(-)	1 SH	2(-)	2(-)	2 SH	3(+)	3(-)	3 SH	4(+)	4(-)	4 SH	5(+)	5(-)	5 SH	6(+)	6(-)	6 SH														
LEACHATE SUMP LEVEL	J-LE-LS-102-1-1,-2,-3,-4 J-LIT-LS-102-1	LE-LS-102 LIT-LS-102	BY MFGR (+)	(-)	SHLD																													
LEACHATE PIT LEAK	J-LDE-LP-102-1, 2, 3 & 4	LDK-LP-102	6	9	GND																													
LEACHATE SUMP PUMP	J-P-P-LS-01-1 THRU -4	P-P-LS-01	T1	T2	T3	GND																												
	J-C-P-LS-01-1 THRU -4	C-P-LS-01	P1	P2	W1	W2	GND																											
EW DIVERTER VALVE MOV-8	J-MOV-8-1 THRU -4	MOV-8	1	2	3	4	5	10	11	6	GND	—	—	—																				
LEACHATE SUMP HIGH HIGH LEVEL	J-LE-LS-01-1 THRU -4	LE-LS-01	14A	14	15																													
EXCESS WATER REMOVAL PUMPS	J-P-P-EW-01-1 THRU -4	P-P-EW-01	T1	T2	T3	GND																												
	J-C-P-EW-01-1 THRU -4	C-P-EW-01	P1	P2	W1	W2	GND																											
	J-P-P-EW-02-1 THRU -4	P-P-EW-02	T1	T2	T3	GND																												
	J-C-P-EW-02-1 THRU -4	C-P-EW-02	P1	P2	W1	W2	GND																											
	J-P-P-EW-03-1 THRU -4	P-P-EW-03	T1	T2	T3	GND																												
	J-C-P-EW-03-1 THRU -4	C-P-EW-03	P1	P2	W1	W2	GND																											
	J-P-P-EW-04-1 THRU -4	P-P-EW-04	T1	T2	T3	GND																												
	J-C-P-EW-04-1 THRU -4	C-P-EW-04	P1	P2	W1	W2	GND																											

NUMBER	TITLE
H-2-98478 SH 1 & 2	ELEC CONNECTOR SCHEDULE
H-2-77573	DRAWING LIST

REFERENCES — DRAWING TRACEABILITY LIST — NEXT USED ON

MICROFILMED — BY-DATE — BY-DATE — APPROVAL — KEH APPROVAL — COMMENT REVIEW — REV — BY — DATE — DESCRIPTION — REVISIONS

OFFICIAL RELEASE BY WHC DATE APR 14 1989

9-5-89 REV 0

IMPACT LEVEL 2

EDT # 102073

WHC APPROVAL BY JR BRIGGS	12-28 1989	U.S. DEPARTMENT OF ENERGY RICHLAND OPERATIONS OFFICE
PROJ	12-28 1988	KAISER ENGINEERS HANFORD COMPANY
JE BREED	7-14 1989	ELECTRICAL CONN SCHEDULE VAULT 218-E-16-102
APPROVED BY RM ITEN	7-13 1988	
SAFETY D PARTHREE	7-11 1988	
APPROVED BY C SUBLETT	7-11 1988	PROJECT TITLE GROUT VAULT PAIR 218-E-16-102 & 103
CHECKED BY RJ HARMAN	7-8 1988	
DRAWN BY LS JONES	3-29 1988	PROJ B-714 — WO ER1060 — JOB 242500
DESIGNED BY WC ATKINS	3-29 1988	SCALE NONE — BLDG 218-E-16 — INDEX 7302.8002
CAD FILE B077642A		DRAWING NUMBER H-2-77642 — SHEET 1 — OF 2 — REV 0

KEHCAD 11002E

CONNECTOR SCHEDULE (SEE NOTE 9)

EQUIPMENT				CONNECTING CABLE						EQUIPMENT		
DEVICE	NAME	CONN NO	CONN TYPE	CABLE NO	CONN NO	CONN TYPE	CABLE	CONN NO	CONN TYPE	NAME	CONN NO	CONN TYPE
VAULT TEMPERATURE ELEMENT TREES TE TERMINAL BOX DWG H-2-77637 DETAIL 1	TE-103-1(1 THRU 16)	J-TE-103-1 TE TERM BOX	PV-72L18-32SL W/CAP & CHAIN SEE NOTE 3	I-TE-101	EXISTING CABLES TO BE USED FROM PREVIOUS VAULT SEE DWG H-2-98478 SH 1 & H-2-77642 SH 1 FOR CABLES AND CONNECTIONS TO PORTABLE INSTR HOUSE (BY OTHERS)							
	TE-103-2 (TE-103-2-1 THRU 16)	J-TE-103-2 TE TERM BOX	PV-72L18-32SL W/CAP & CHAIN SEE NOTE 3	I-TE-102								
	TE-103-3 (TE-103-3-1 THRU 16)	J-TE-103-3 TE TERM BOX	PV-72L18-32SL W/CAP & CHAIN SEE NOTE 3	I-TE-103								
	TE-103-4 (TE-103-4-1 THRU 16)	J-TE-103-4 TE TERM BOX	PV-72L18-32SL W/CAP & CHAIN SEE NOTE 3	I-TE-104								
EXCESS WATER REMOVAL PUMPS DWG H-2-77606	P-EW-01 (BY OTHERS)	J-P-P-EW-01-1	CA-3101E-24-22P-F80 W/CAP & CHAIN (NIC)	P-P-EW-01	EXISTING CABLES TO BE USED FROM PREVIOUS VAULT SEE SHEET 1 FOR CABLES AND CONNECTIONS TO PORTABLE INSTR HOUSE (BY OTHERS).							
		J-C-P-EW-01-1	CA-3101E-24-16S-8P-F80 W/CAP & CHAIN (NIC)	C-P-EW-01								
	P-EW-02 (BY OTHERS)	J-P-P-EW-02-1	CA-3101E-24-22P-F80 W/CAP & CHAIN (NIC)	P-P-EW-02								
		J-C-P-EW-02-1	CA-3101E-24-16S-8P-F80 W/CAP & CHAIN (NIC)	C-P-EW-02								
	P-EW-03 (BY OTHERS)	J-P-P-EW-03-1	CA-3101E-24-22P-F80 W/CAP & CHAIN (NIC)	P-P-EW-03								
		J-C-P-EW-03-1	CA-3101E-24-16S-8P-F80 W/CAP & CHAIN (NIC)	C-P-EW-03								
	P-EW-04 (BY OTHERS)	J-P-P-EW-04-1	CA-3101E-24-22P-F80 W/CAP & CHAIN (NIC)	P-P-EW-04								
		J-C-P-EW-04-1	CA-3101E-24-16S-8P-F80 W/CAP & CHAIN (NIC)	C-P-EW-04								
LEACHATE SUMP LEVEL DWG H-2-77617 & H-2-77616	LE-LS-103 (LEACH LEVEL) LIT-LS-103 (XMTR) (BY OTHERS)	J-LE-LS-103-1 J-LIT-LS-103-1 (XMTR) (BY OTHERS)	SEE NOTE 2 CA-3102E-16S-5P-F80 W/CAP & CHAIN	I-LE-LS-103 C-LIT-101	J-LE-LS-103-2 EXISTING CABLE TO BE USED FROM PREVIOUS VAULT SEE DWG H-2-98478 SH 2 FOR CABLE & CONN TO PORTABLE INSTR HOUSE (BY OTHERS)	———	SEE NOTE 2	J-LE-LS-103-3	———	———	J-LE-LS-103-4	SEE NOTE 2
LEACHATE PIT LEAK DWG H-2-77612	LDK-LP-103 (LEAK DET RELAY)	J-LDK-LP-103-1	CA-3101E-14S-7P-F80 W/CAP & CHAIN	C-LDK-LP-01	EXISTING CABLE TO BE USED FROM PREVIOUS VAULT SEE SHEET 1 FOR CABLE & CONNECTIONS TO PORTABLE INSTRUMENT HOUSE (BY OTHERS)							
LEACHATE SUMP PUMP DWG H-2-77616	P-LS-01 (BY OTHERS)	J-P-P-LS-01-1(PWR)	CA-3101E-24-22P-F80 W/CAP & CHAIN (NIC)	P-P-LS-01(PWR)	EXISTING CABLE TO BE USED FROM PREVIOUS VAULT SEE SHEET 1 FOR CABLE & CONNECTIONS TO PORTABLE INSTRUMENT HOUSE (BY OTHERS)							
		J-C-P-LS-01-1(CONT)	CA-3101E-46S-8P-F80 W/CAP & CHAIN (NIC)	C-P-LS-01(CONT)								
LEACHATE SUMP HIGH HIGH LEVEL DWG H-2-77616	LE-LS-01 (BY OTHERS)	J-LE-LS-01-1	CA-3101E-14S-7P-F80	C-LE-LS-01	EXISTING CABLE TO BE USED FROM PREVIOUS VAULT SEE SHEET 1 FOR CABLE & CONNECTIONS TO PORTABLE INSTRUMENT HOUSE (BY OTHERS)							
EV DIVERTER VALVE MOV-8 DWG H-2-77603	MOV-8 (PWR & CONTROL) (BY OTHERS)	J-MOV-8-1	CA-3101E-24A24P-F80 (BY OTHERS)	C-MOV-8	EXISTING CABLE TO BE USED FROM PREVIOUS VAULT SEE SHEET 1 FOR CABLE & CONNECTIONS TO PORTABLE INSTRUMENT HOUSE (BY OTHERS)							
DATA LINK (SEE NOTES 10 & 11)	MANHOLE 103A WW	———	———	I-CDL-01-6	J-CDL-01-10	CA-PV76L-14-18P W/TYPE S BACKSHELL	6 TW SH PR #24 BELDEN NO. 9731 (LENGTH AS REQD)	J-CDL-01-11	CA-PV71L-14-18S W/TYPE S BACKSHELL	MANHOLE MH 102 WW SEE NOTE 5		
	MANHOLE 103A WW	———	———	I-CDL-01-7	J-CDL-01-12	CA-PV76L-14-18P W/TYPE S BACKSHELL	6 TW SH PR #24 BELDEN NO. 9731 (LENGTH AS REQD)	J-CDL-01-13	CA-PV71L-14-18S W/TYPE S BACKSHELL	MANHOLE MH 102 WW SEE NOTE 5		
	MANHOLE 103A WW	———	———	I-CDL-01-8	J-CDL-01-14	CA-PV76L-14-18P W/TYPE S BACKSHELL	6 TW SH PR #24 BELDEN NO. 9731 (LENGTH AS REQD)	J-CDL-01-15	CA-PV71L-14-18S W/TYPE S BACKSHELL	MANHOLE MH 102 WW SEE NOTE 5		
CLOSED CIRCUIT TELEVISION (SEE NOTES 12 & 13)	MANHOLE 103A WW	———	———	I-XC-01A-6	J-XC-01A-11	PL-259	COAX CABLE RG-11 BELDEN #8238 (LENGTH AS REQD)	J-XC-01A-12	PL-259	MANHOLE MH 103 WW		
	MANHOLE 103A WW	———	———	I-XC-01A-7	J-XC-01A-13	PL-259	COAX CABLE RG-11 BELDEN #8238 (LENGTH AS REQD)	J-XC-01A-14	PL-259	MANHOLE MH 103 WW		
	MANHOLE 103A WW	———	———	I-XC-01A-8	J-XC-01A-15	PL-259	COAX CABLE RG-11 BELDEN #8238 (LENGTH AS REQD)	J-XC-01A-16	PL-259	MANHOLE MH 103 WW		

CONNECTOR TERMINATION CHART

DEVICE	CONNECTOR NO	WIRE PREFIX NO.	A	B	C	D	E	F	G	H	J	K	L	M	N	P	R	S	T	U	V	W	X	Y	Z	a	b	c	d	e	f	g	h	j
VAULT TEMPERATURE ELEMENTS	J-TE-103-1	TE-103-1	1(+)	1(-)	2(+)	2(-)	3(+)	3(-)	4(+)	4(-)	5(+)	5(-)	6(+)	6(-)	7(+)	7(-)	8(+)	8(-)	9(+)	10(-)	10(+)	10(-)	11(+)	11(-)	12(+)	12(-)	13(+)	13(-)	14(+)	14(-)	15(+)	15(-)	16(+)	16(-)
	J-TE-103-2	TE-103-2	1(+)	1(-)	2(+)	2(-)	3(+)	3(-)	4(+)	4(-)	5(+)	5(-)	6(+)	6(-)	7(+)	7(-)	8(+)	8(-)	9(+)	10(-)	10(+)	10(-)	11(+)	11(-)	12(+)	12(-)	13(+)	13(-)	14(+)	14(-)	15(+)	15(-)	16(+)	16(-)
	J-TE-103-3	TE-103-3	1(+)	1(-)	2(+)	2(-)	3(+)	3(-)	4(+)	4(-)	5(+)	5(-)	6(+)	6(-)	7(+)	7(-)	8(+)	8(-)	9(+)	10(-)	10(+)	10(-)	11(+)	11(-)	12(+)	12(-)	13(+)	13(-)	14(+)	14(-)	15(+)	15(-)	16(+)	16(-)
	J-TE-103-4	TE-103-4	1(+)	1(-)	2(+)	2(-)	3(+)	3(-)	4(+)	4(-)	5(+)	5(-)	6(+)	6(-)	7(+)	7(-)	8(+)	8(-)	9(+)	10(-)	10(+)	10(-)	11(+)	11(-)	12(+)	12(-)	13(+)	13(-)	14(+)	14(-)	15(+)	15(-)	16(+)	16(-)
LEACHATE SUMP LEVEL	J-LE-LS-103-1-1,-2,-3,-4	LE-LS-103	BY MFGR (+)		(-)																													
	J-LIT-LS-103-1-1	LIT-LS-103			SH																													
LEACHATE PIT LEAK	J-LDE-LP-103-1,-2,-3 & -4	LDK-LP-103	6		9		G																											
DATA LINK	J-CDL-01-11 THRU -16	CDL-01	1(+)		1(-)		1 SH	2(+)		2(-)		2 SH	3(+)		3(-)		3 SH	4(+)		4(-)		4 SH	5(+)		5(-)		5 SH	6(+)		6(-)		6 SH		
LEACHATE SUMP PUMP	J-P-P-LS-01-1	P-P-LS-01	T1		T2		T3	GND																										
	J-C-P-LS-01-1	C-P-LS-01	P1		P2		W1	W2		GND																								
EW DIVERTER VALVE MOV-8	J-VOV-8-1	MOV-8	1		2		3	4		5	10	11	6	GND																				
LEACHATE SUMP HIGH HIGH LEVEL	J-LE-LS-01-1	LE-LS-01	14A		14		15																											
EXCESS WATER REMOVAL PUMPS	J-P-P-EW-01-1	P-P-EW-01	T1		T2		T3	GND																										
	J-C-P-EW-01-1	C-P-EW-01	P1		P2		W1	W2		GND																								
	J-P-P-EW-02-1	P-P-EW-02	T1		T2		T3	GND																										
	J-C-P-EW-02-1	C-P-EW-02	P1		P2		W1	W2		GND																								
	J-P-P-EW-03-1	P-P-EW-03	T1		T2		T3	GND																										
	J-C-P-EW-03-1	C-P-EW-03	P1		P2		W1	W2		GND																								
	J-P-P-EW-04-1	P-P-EW-04	T1		T2		T3	GND																										
	J-C-P-EW-04-1	C-P-EW-04	P1		P2		W1	W2		GND																								

SEE SHEET 1 FOR NOTES.

OFFICIAL RELEASE DATE APR 14 1999

4-5-99 REV 0

IMPACT LEVEL 2

EDT # 102073

WHC APPROVAL	DATE	U.S. DEPARTMENT OF ENERGY RICHLAND OPERATIONS OFFICE	
BY JR BRIGGS	4/6/89	KAISER ENGINEERS HANFORD COMPANY	
PROJ ENGR	12-28-1998	ELECTRICAL CONN SCHEDULE VAULT 218-E-16-103	
GA ENGR	12-28-1998		
APPROVED BY JE BREED	7-14-1988		
APPROVED BY RM ITEN	7-13-1988		
SAFETY D PARTHREE	7-11-1988		
APPROVED BY MGAL SUBLETT	7-11-1988	PROJECT TITLE	
CHECKED BY RJ HARMAN	7-11-1988	GROUT VAULT PAIR 218-E-16-102 & 103	
DRAWN BY LS JONES	3-29-1988	PROJ B-714	WO ER1060 / JOB 242500
DESIGNED BY WC ATKINS	3-29-1988	SCALE NONE	BLDG 218-E-16 / INDEX 7302.8002
CAD FILE 80776423		DRAWING NUMBER H-2-77642	SHEET 2 OF 2 REV 0

NUMBER	TITLE	NUMBER	TITLE
DRAWING TRACEABILITY LIST		DRAWING LIST REFERENCES	
		NEXT USED ON	

BY-DATE	BY-DATE	REV BY DATE	DESCRIPTION	REV
APPROVAL	KEM APPROVAL			
REVISIONS				
COMMENT REVIEW				

MICROFILMED

KEHCAD 1 110025

D-PB-01-13A
D-PB-01-13B
D-PB-01-13C
GND
SPARE
AC1
ACN
GND
AC1
ACN
SPARE
P-LS-102A-A(+)
P-LS-102A-A(-)
GND
P-LS-102B-A(+)
P-LS-102B-A(-)

LEACHATE SUMP
PUMP P-LS-102A & B
MOTOR CONTROLLER

ANN-103	ANN-105	ANN-102
ANN-104	ANN-107	ANN-120
ANN-106	ANN-109	ANN-122
ANN-108	ANN-111	ANN-124
ANN-110	ANN-113	ANN-126
ANN-112	ANN-115	ANN-128
ANN-114	ANN-117	ANN-130
ANN-116	ANN-119	ANN-132
ANN-118	ANN-155	ANN-135
ANN-121	ANN-156	ANN-137
ANN-123	ANN-DC+	ANN-139
ANN-125	ANN-DC-	ANN-141
ANN-127	ANN-134	ANN-143
ANN-129	ANN-136	ANN-144
ANN-131	ANN-138	ANN-151
ANN-133	ANN-140	ANN-152
ANN-153	ANN-142	ANN-DC+
ANN-154	ANN-145	ANN-DC-
ANN-DC+	ANN-146	SPARE
ANN-DC+	ANN-147	SPARE
SPARE	ANN-148	SPARE
SPARE	ANN-149	SPARE
SPARE	ANN-150	SPARE
SPARE	SPARE	SPARE

ANN-TBX-103

ANN-103	ANN-105
ANN-104	ANN-107
ANN-106	ANN-109
ANN-108	ANN-111
ANN-110	ANN-113
ANN-112	ANN-115
ANN-114	ANN-117
ANN-116	ANN-119
ANN-118	ANN-155
ANN-121	ANN-156
ANN-123	ANN-DC+
ANN-125	ANN-DC+
ANN-127	SPARE
ANN-129	SPARE
ANN-131	SPARE
ANN-133	SPARE
ANN-153	SPARE
ANN-154	SPARE
ANN-DC+	SPARE
ANN-DC+	SPARE
SPARE	SPARE
SPARE	SPARE
SPARE	SPARE
SPARE	SPARE

ANN-TBX-102

ANN-103
ANN-104
ANN-106
ANN-108
ANN-110
ANN-112
ANN-114
ANN-116
ANN-118
ANN-121
ANN-123
ANN-125
ANN-127
ANN-129
ANN-131
ANN-133
ANN-153
ANN-154
ANN-DC+
ANN-DC+
SPARE
SPARE
SPARE
SPARE
SPARE

ANN-TBX-103A

ANN-102
ANN-120
ANN-122
ANN-124
ANN-126
ANN-128
ANN-130
ANN-132
ANN-135
ANN-137
ANN-139
ANN-141
ANN-143
ANN-144
ANN-151
ANN-152
ANN-DC+
ANN-DC+
SPARE
SPARE
SPARE
SPARE
SPARE

ANN-TBX-102A

D-PB-01-13A
D-PB-01-13B
D-PB-01-13C
GND
SPARE
AC1
ACN
GND
AC1
ACN
SPARE
P-LS-103A-A(+)
P-LS-103A-A(-)
GND
P-LS-103B-A(+)
P-LS-103B-A(-)

LEACHATE SUMP
PUMP P-LS-103A & B
MOTOR CONTROLLER

LDK-LS-102-14A	
LDK-LS-102-14	
LDK-LS-102-15	
SPARE	
SPARE	
SPARE	
LDK-LP-102-14A	
LDK-LP-102-14	
LDK-LP-102-15	
SPARE	
SPARE	
SPARE	
TE-LS-102-1(+)(C)(I)	
TE-LS-102-1(-)(AL)	
TE-LS-102-2(+)(C)(I)	
TE-LS-102-2(-)(AL)	
SPARE (C)(I)	
SPARE (AL)	
SPARE (C)(I)	
SPARE (AL)	

I-TB-LS-102

LDK-LS-103-14A	
LDK-LS-103-14	
LDK-LS-103-15	
SPARE	
SPARE	
SPARE	
LDK-LP-103-14A	
LDK-LP-103-14	
LDK-LP-103-5	
SPARE	
SPARE	
SPARE	
TE-LS-103-1(+)(C)(I)	
TE-LS-103-1(-)(AL)	
TE-LS-103-2(+)(C)(I)	
TE-LS-103-2(-)(AL)	
SPARE (C)(I)	
SPARE (AL)	
SPARE (C)(I)	
SPARE (AL)	

I-TB-LS-103

P-LP-103A-A(+)
P-LP-103A-A(-)
P-LP-103A-GND
SPARE
SPARE
SPARE
P-LP-103B-A(+)
P-LP-103B-A(-)
P-LP-103B-GND
SPARE
SPARE
SPARE

P-TB-LS-103

REPLACE "ZZZ"
W/MANHOLE NUMBER

TB-P-ZZZ

D-PB-01-13A
D-PB-01-13B
D-PB-01-13C
GND

MANHOLE POWER TERMINAL BOX

P-LP-102A-A(+)
P-LP-102A-A(-)
P-LP-102A-GND
SPARE
SPARE
SPARE
P-LP-102B-A(+)
P-LP-102B-A(-)
P-LP-102B-GND
SPARE
SPARE
SPARE

P-TB-LS-102

OFFICIAL RELEASE
BY WHC
DATE APR 04 1989

EDT # 101089

IMPACT LEVEL 2

1-7-89
Rev 0

WHC APPROVAL BY SR BRIGGS	DATE 12-28-88	U.S. DEPARTMENT OF ENERGY RICHLAND OPERATIONS OFFICE
		KAISER ENGINEERS HANFORD COMPANY
PROJ ENGR	12-28-88	ELECTRICAL TERMINAL BOX CONNECTION DIAG
QA	7-13-88	
APPROVED BY WE BREED	7-13-88	
APPROVED BY RM ITEN	7-13-88	
SAFETY D PARTHREE	7-11-88	
APPROVED MGR PDSP BY WAC SUBLETT	7-11-88	
CHECKED BY RJ HARMAN	7-8-88	PROJECT TITLE GROUT VAULT PAIR 218-E-16-102 & 103
DRAWN BY JL BRINKLEY	5-13-88	PROJ B-714 / WO ER1060 / JOB 242500
DESIGNED BY WC ATKINS	5-13-88	SCALE NONE / BLDG 218-E-16 / SHEET 1 OF 2
CAD FILE B077643A		DRAWING NUMBER H-2-77643 / SHEET 1 / 2
CAD DOC 2JUEV:ACC2:9.0:NN		

NUMBER	TITLE	REFERENCES
H-2-77173	DRAWING LIST	

DRAWING TRACEABILITY LIST

NEXT USED ON

BY-DATE	BY-DATE	REV BY DATE	DESCRIPTION	REV
APPROVAL	KEH APPROVAL			

REVISIONS

MICROFILMED

COMMENT REVIEW

KE-CAD

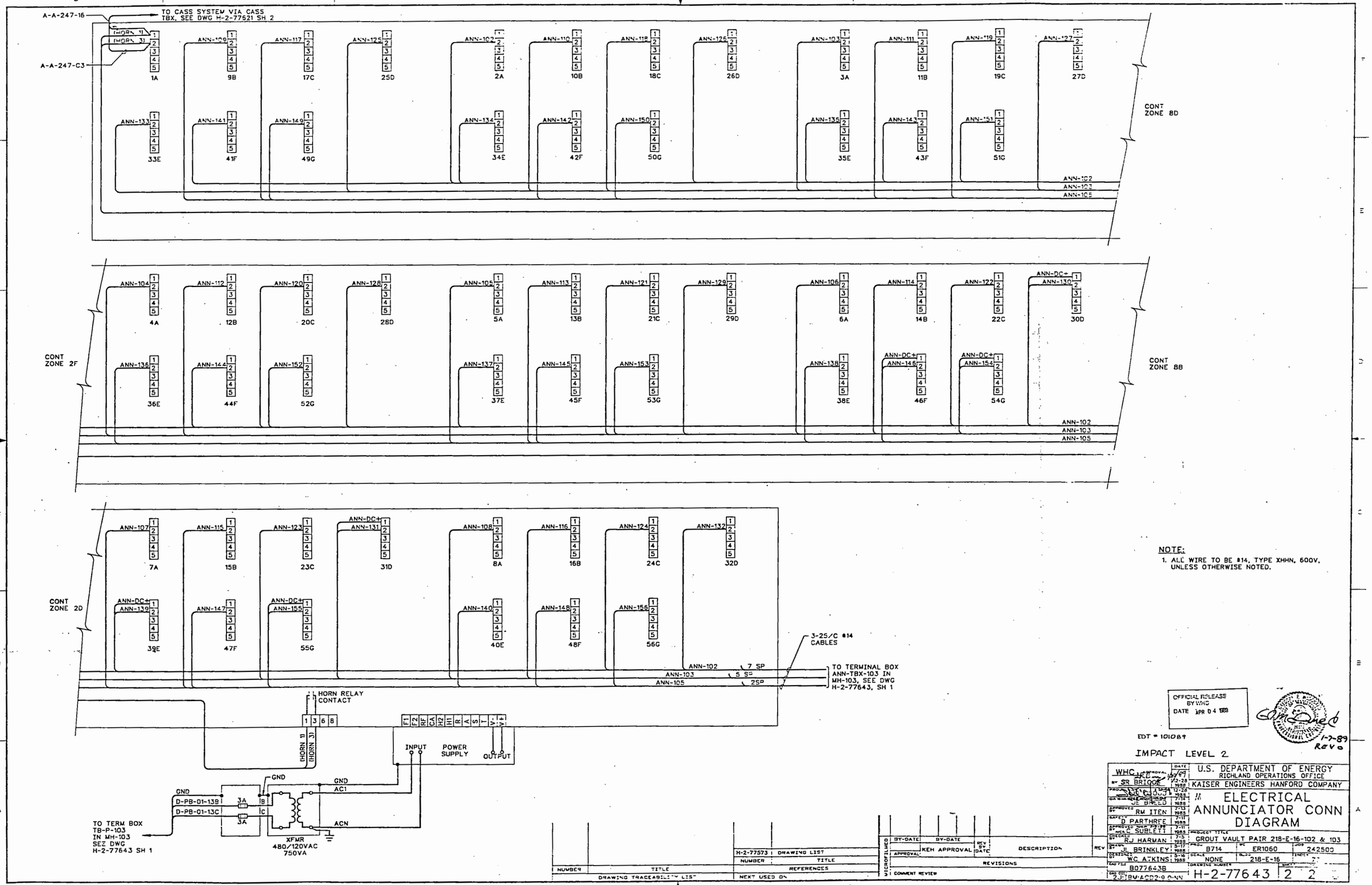

NOTE:

1. ALL WIRE TO BE #14, TYPE XHHN, 600V, UNLESS OTHERWISE NOTED.

OFFICIAL RELEASE BY WHC DATE APR 04 1989

EDT = 101089

1-2-89 Rev 0

IMPACT LEVEL 2

WHC	U.S. DEPARTMENT OF ENERGY RICHLAND OPERATIONS OFFICE	
KAISER ENGINEERS HANFORD COMPANY		
ELECTRICAL ANNUNCIATOR CONN DIAGRAM		
PROJECT TITLE: GROUT VAULT PAIR 218-E-16-102 & 103		
B714	ER1060	242500
NONE	218-E-16	
B077643B	H-2-77643	2 2

NUMBER	TITLE
H-2-77573	DRAWING LIST

DRAWING TRACEABILITY LIST

NUMBER	TITLE
REFERENCES	

NEXT USED ON

BY-DATE	BY-DATE	REV BY DATE	DESCRIPTION	REV
APPROVAL	KEH APPROVAL			

REVISIONS

MICROFILMED

COMMENT REVIEW

110028

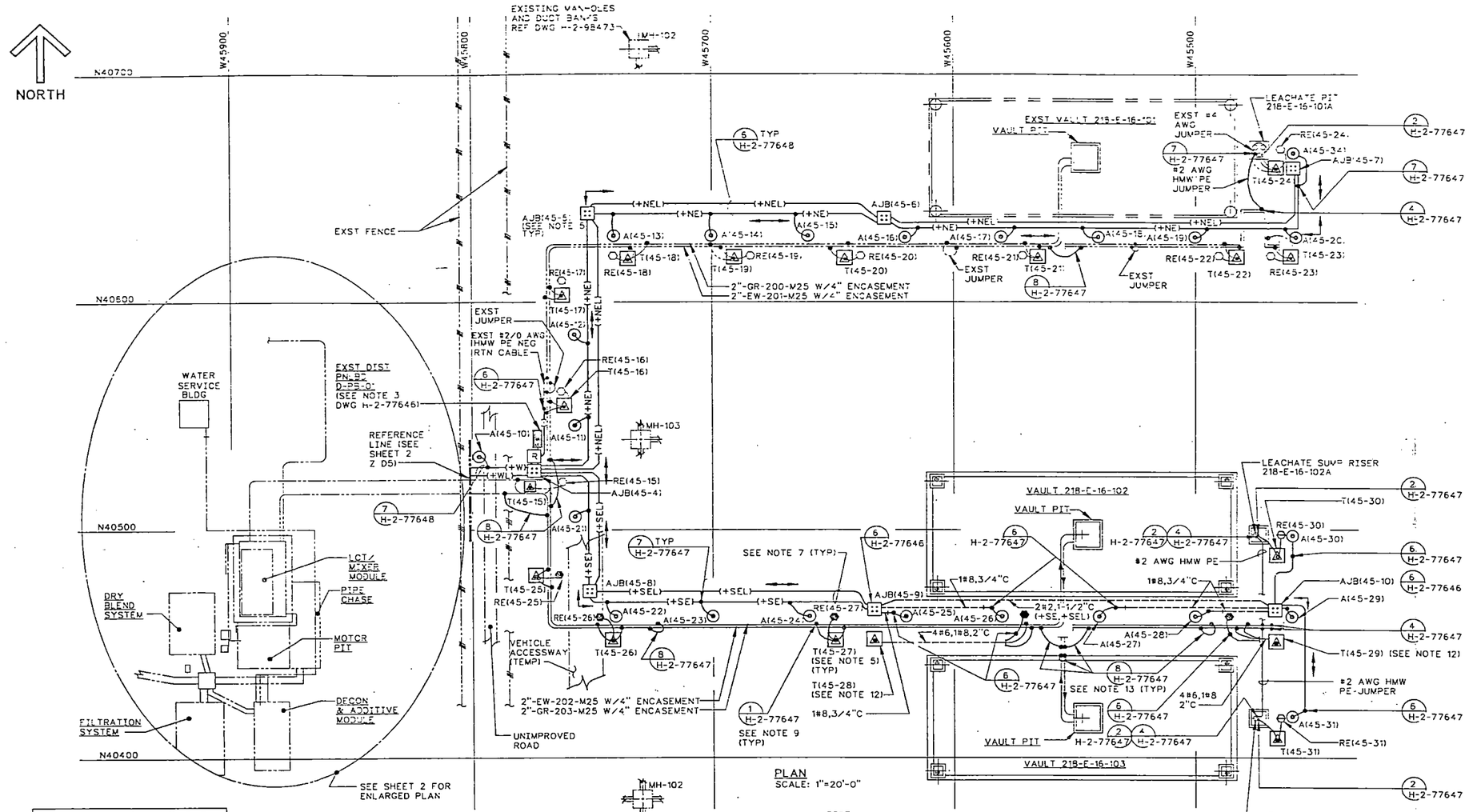

PLAN
SCALE: 1"=20'-0"

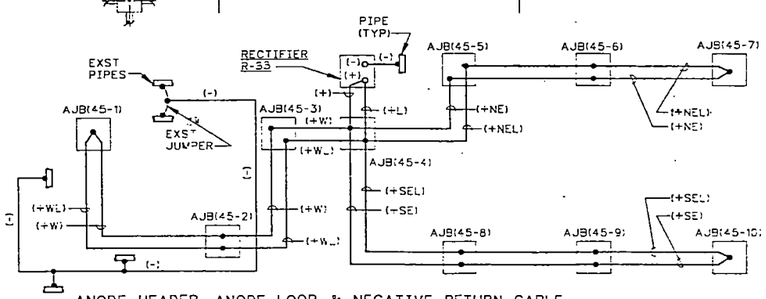

ANODE HEADER, ANODE LOOP & NEGATIVE RETURN CABLE CONNECTION DIAGRAM

SYMBOL LIST

SYMBOL	DESCRIPTION (SEE NOTE 1)
	VERTICAL PREPACKAGED ANODE SEE DETAIL 5, DWG H-2-77647
	HORIZONTAL REFERENCE ELECTRODE SEE DETAIL 1, DWG H-2-77646
	REF ELECTRODE, INSTALL VERT AT MID-POINT OF RISER PIPE AND 12 IN. FROM RISER PIPE
	ANODE JUNCTION BOX (AJB) SEE DETAILS 1,2,3 & 6, DWG H-2-77646 AND NOTE 4
R	RECTIFIER R-33 SEE DETAIL 4, DWG H-2-77646
OR	CABLE MARKER SEE DETAIL 5, DWG H-2-77646 AND NOTE 8
—(+)—	ANODE HEADER CABLE, # 2 AWG WITH HMW PE INSULATION. INSERT APPROPRIATE ABBREVIATION. W=WEST; NE=NORTH-EAST; SE=SOUTH-EAST
—(+L)—	ANODE LOOP CABLE, # 2 AWG WITH HMW PE INSULATION. INSERT APPROPRIATE ABBREVIATION. W=WEST; NE=NORTH-EAST; SE=SOUTH-EAST
—(-)—	NEGATIVE RETURN CABLE, # 2 AWG WITH HMW PE INSULATION
	EXISTING
TEST STA ENCLOSURE, TEST STA, PIPE TEST CONDUCTORS	NEW TEST STATION & NEW PIPE TEST CONDUCTORS SEE DETAIL 1, 2 & 3, DWG H-2-77646 AND NOTES 4 & 13
TEST STA ENCLOSURE, TEST STA, REF ELECTRODE, PIPE TEST CONDUCTORS	NEW TEST STATION, EXST PIPE TEST CONDUCTORS & EXST REF ELECTRODES SEE DETAIL 1, 2 & 3, DWG H-2-77646 AND NOTE 3
	RIGID METAL CONDUIT END BUSHING

NOTES:

1. SEE CONSTRUCTION SPECIFICATION B-714-C2 FOR MATERIAL DESCRIPTION AND INSTALLATION INSTRUCTIONS UNLESS OTHERWISE NOTED.
2. ABBREVIATIONS ARE PER ANSI Y1.1 UNLESS OTHERWISE NOTED.
3. REMOVE EXISTING METAL POSTS USED FOR SUPPORT OF EXISTING COILED PIPE TEST CONDUCTORS AND INSTALL TEST STATION ENCLOSURES, APPROXIMATELY WHERE SHOWN DIRECTLY ABOVE POINT OF PIPE TEST CONDUCTOR EARTH EMERGENCE. SEE DWG H-2-98479 & SK-2-44557 FOR DESIGN OF EXISTING INSTALLATION OF PIPE TEST CONDUCTORS AND REFERENCE ELECTRODES.
4. TEST STATION ENCLOSURES T(45-25) THRU T(45-31) AND ANODE JUNCTION BOX ENCLOSURES AJB(45-8), (45-9) & (45-10) SHALL HAVE 25' OF CABLE COILED INSIDE TO PERMIT ENCLOSURES TO BE RAISED TO GRADE LEVEL AT FINAL BACKFILL.
5. ANODE JUNCTION BOX ENCLOSURES AND TEST STATION ENCL SHALL BE LOCATED AT COORDINATES SHOWN IN TABLE EXCEPT THEY MAY BE MOVED IN ANY DIRECTION SUBJECT TO APPROVAL BY THE KEH FIELD ENGINEER. FINAL LOCATION SHALL BE DETERMINED AT TIME OF INSTALLATION.
6. ANODES SHALL BE INSTALLED AT COORDINATES SHOWN IN TABLE EXCEPT THEY MAY BE MOVED IN ANY DIRECTION SUBJECT TO APPROVAL BY THE KEH FIELD ENGINEER.
7. ANODE HEADER AND LOOP CABLES SHALL BE ROUTED DIRECTLY OVER ANODE LOCATIONS WHERE PRACTICABLE.
8. CABLE MARKERS SHALL BE INSTALLED WHERE SHOWN DIRECTLY OVER THE CABLES.
9. EXOTHERMICALLY WELD TWO #6 AWG PIPE TEST CONDUCTORS TO THE PIPE AS SHOWN IN DET 1 & 2 ON H-2-77647. WRAP ONE OF THE PIPE TEST CONDUCTORS WITH WHITE TAPE AND THE OTHER WITH RED TAPE AT TERMINATION IN TEST STATION. EXOTHERMICALLY WELD TWO #6 AWG PIPE TEST CONDUCTORS TO ANY FOREIGN PIPE OR OTHER PIPES AS DIRECTED BY THE KEH FIELD ENGINEER. WRAP EACH OF THE TWO PIPE TEST CONDUCTORS WITH BLUE TAPE AT TERMINATION IN TEST STATION. MAINTAIN A 12 INCH SEPARATION BETWEEN CONDUCTOR CONNECTIONS ON THE PIPE. IDENTIFY EACH PIPE TEST CONDUCTOR PER THE REQUIREMENTS IN CONSTRUCTION SPECIFICATION B-714-C2, SEE DETAILS 1 & 2 ON DWG H-2-77646.
10. CHIP APPROX A 6" DIAMETER AREA OF CONCRETE, 1" DEEP AROUND THE TEST LEADS THAT EMERGE FROM THE CONCRETE SHOWN ON SHEET 2, ZONE D7. CUT THE CONDUCTORS AS CLOSE TO THE CONCRETE AS PRACTICAL AND FILL CHIPPED AREA WITH GROUT. PAINT NEW GROUT WHITE TO MATCH EXISTING CONCRETE.
11. TAPE END AND COIL THE #2/0 AWG NEGATIVE RETURN CABLE FROM PIPE 2"-W-C1-P01 (2"-SN-621-M25) INSIDE TEST STATION ENCLOSURE T(45-10). SEE SHEET 2, ZONE D6.
12. INSTALL CONDUIT SEALING FITTING IN TEST STATION ENCLOSURES T(45-28) AND T(45-29) SIMILAR TO DETAIL 6 ON DWG H-2-77646.

(NOTES CONTINUED IN Z B3)

13. DO NOT CONNECT PIPE TEST CONDUCTORS OR PIPE JUMPERS TO THE PIPE INSIDE ANY PIPE EXPANSION VOID.

ANODE LOCATION TABLE
(SEE NOTE 6)

NUMBER	COORDINATES	
A(45-1)	N40532	W45920
A(45-2)	N40532	W45884
A(45-3)	N40484	W45912
A(45-4)	N40444	W45908
A(45-5)	N40425	W40896
A(45-6)	N40427	W45876
A(45-7)	N40462	W45855
A(45-8)	N40532	W45855
A(45-9)	N40532	W45840
A(45-10)	N40532	W45800
A(45-11)	N40547	W45757
A(45-12)	N40585	W45757
A(45-13)	N40553	W45720
A(45-14)	N40553	W45700
A(45-15)	N40553	W45660
A(45-16)	N40553	W45620
A(45-17)	N40553	W45580
A(45-18)	N40553	W45540
A(45-19)	N40531	W45500
A(45-20)	N40553	W45460
A(45-21)	N40585	W45757
A(45-22)	N40456	W45740
A(45-23)	N40456	W45700
A(45-24)	N40456	W45660
A(45-25)	N40456	W45620
A(45-26)	N40456	W45580
A(45-27)	N40456	W45540
A(45-28)	N40456	W45500
A(45-29)	N40456	W45460
A(45-30)	N40494	W45460
A(45-31)	N40414	W45460
A(45-32)	N40530	W45892
A(45-33)	N40514	W45889
A(45-34)	N40588	W45460

ANODE JUNCTION BOX ENCL LOCATION TABLE
(SEE NOTE 5)

NUMBER	COORDINATES	
AJB(45-1)	N40527	W45907
AJB(45-2)	N40428	W45850
AJB(45-3)	N40527	W45882
AJB(45-4)	N40527	W45774
AJB(45-5)	N40519	W45750
AJB(45-6)	N40336	W45830
AJB(45-7)	N40360	W45470
AJB(45-8)	N40445	W45760
AJB(45-9)	N40465	W45640
AJB(45-10)	N40465	W45470

TEST STATION ENCLOSURE LOCATION TABLE
(SEE NOTE 5)

NUMBER	COORDINATES	
T(45-25)	N40485	W45773
T(45-26)	N40446	W45740
T(45-27)	N40446	W45660
T(45-28)	N40446	W45640
T(45-29)	N40446	W45473
T(45-30)	N40492	W45473
T(45-31)	N40574	W45473

NUMBER	TITLE
H-2-98880	SITE GRADING/PAVING PLAN
H-2-98807	INTERCONNECTING PIPE CHASE PLANS, SECTIONS & DETAILS
H-2-98842	MODULE INTCON PIPING SECT & DET
H-2-58473	ELEC SITE & VAULT PLANS & DET
H-2-76455	CIVIL SITE PLAN
H-2-98837	MODULE INTCON PIPING LAYOUT
H-2-98610	ELEC DUCT BANK SITE PLAN LAYOUT
H-2-98806	CONCRETE ENCASEMENT FOR UGND PIPE
H-2-76529	ELEC CATH PROT PLANS & DETAILS
SK-2-44557	ELEC CATH PROT TEST WIRE INSTL
H-2-98479	ELEC CATH PROT TEST WIRE INSTL
H-2-77573	DRAWING LIST
SK-2-44557	ELEC CATH PROT TEST WIRE INSTALLATION
H-2-98479	ELEC CATH PROT TEST WIRE INSTALLATION

DRAWING TRACEABILITY LIST — NEXT USED ON

OFFICIAL RELEASE BY WHC DATE APR 04 1989

NACE CORROSION SPECIALIST NAME Willis G. Gooch 2877 DATE DWG REV NO. 0

EDT # 101089

IMPACT LEVEL 3

REV	DATE	DESCRIPTION
0	3-31-89	REVISED

REVISIONS

WHC APPROVAL BY MD NORRIS 1988; PROJ ENGR JC SULLIVAN 1988; QA & ENGR JE BEELS 1988; APPROVED RW ITEN 1988; DRAFT D PARTHREE 1988; APPROVED ARS C SUBLETT 1988; DESIGN LEAD OF WOODWARD 1988; DESIGN JL BRINKLEY 1988; DESIGN WC ATKINS 1988

U.S. DEPARTMENT OF ENERGY
RICHLAND OPERATIONS OFFICE
KAISER ENGINEERS HANFORD COMPANY

ELECTRICAL CATHODIC PROTECTION PLAN

PROJ-DET TITLE: GROUT VAULT PAIR 218-E-16-102 & 103

DRAWN B-714; SCALE SHOWN; BLDG 218-E-16; INDEX 780; CAD FILE B0776454; DRAWING NUMBER H-2-77645; SHEET 1; OF 2; REV 0

KEH APPROVAL

COMMENT REVIEW

MICROFILMED

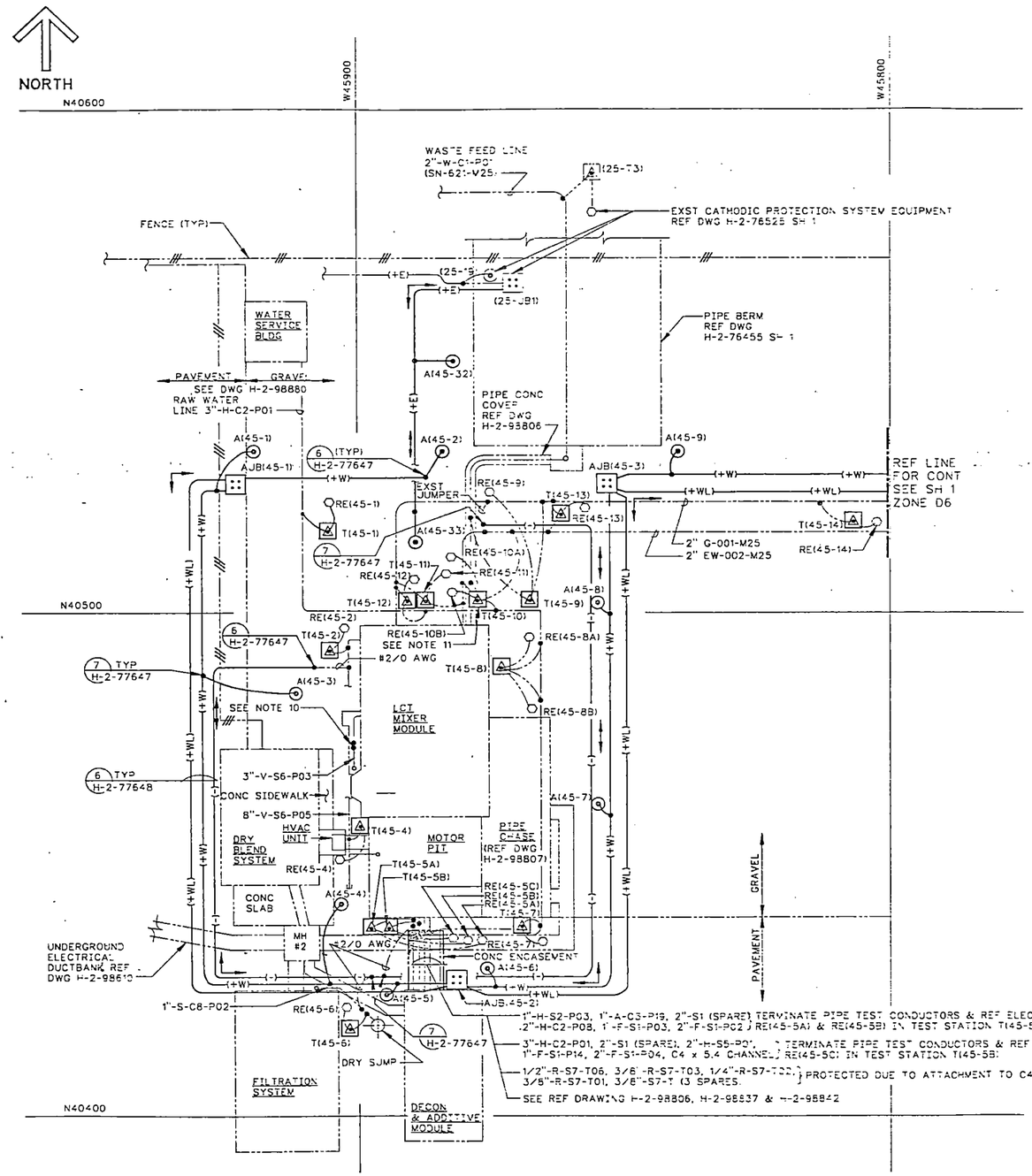

PLAN
SCALE: 1"=10'-0"

PIPES CATHODICALLY PROTECTED BY PROJECT B-714

PIPE SIZE & IDENTIFICATION	USE	ASSOCIATED TEST STATION
3"-H-C2-P01	RAW WATER	T(45-1), T(45-12), T(45-10), T(45-6), T(45-7), T(45-5B)
2"-H-C2-P08	RAW WATER	T(45-5A)
1"-A-C3-P19	COMPRESSED AIR	T(45-5A)
2"-S1	SPARE	T(45-5B)
2"-S1	SPARE	T(45-5A)
1"-F-S1-P03	DECON SOLUTION	T(45-5A)
2"-F-S1-P02	DECON SOLUTION	T(45-5A)
1"-F-S1-P14	DECON SOLUTION	T(45-5B)
2"-F-S1-P04	DECON SOLUTION	T(45-5B)
1"-H-S2-P03	RAW WATER	T(45-5A)
2"-H-S5-P01	RAW WATER	T(45-5B)
3/8"-S7-T	3 SPARE	T(45-5B)
3/8"-R-S7-T01	ADDITIVES	T(45-5B)
1/4"-R-S7-T02	ADDITIVES	T(45-5B)
3/8"-R-S7-T03	ADDITIVES	T(45-5B)
1/2"-R-S7-T06	ADDITIVES	T(45-5B)
1"S-C8-P02	VENTILATION	T(45-6)
8"V-S6-P05	VENTILATION	T(45-21),T(45-4)
4"/2" G-001-M25 (GR-200-M25)	GROUT DISCHARGE (VAULT 101)	T(45-12), T(45-11), T(45-9), T(45-13), T(45-14), T(45-15), T(45-16), T(45-17), T(45-18), T(45-19), T(45-20), T(45-21), T(45-22), T(45-23)
4"/2" EW-002-M25 (EW-201-M25)	EXCESS WATER (VAULT 101)	T(45-10), T(45-11), T(45-13), T(45-14), T(45-15), T(45-17), T(45-18), T(45-19), T(45-20), T(45-21), T(45-22), T(45-23)
4"/2" GR-203-M25	GROUT DISCHARGE (VAULT 102)	T(45-25), T(45-26), T(45-27), T(45-28), T(45-29)
4"/2" EW-202-M25	EXCESS WATER (VAULT 102)	T(45-25), T(45-26), T(45-27), T(45-28), T(45-29)
LEACHATE TK 101 18" RISER PIPES	LEACHATE COLLECTION	T(45-24)
LEACHATE TK 101 4" RISER PIPE	LEACHATE COLLECTION	T(45-24)
LEACHATE TK 102 24" RISER PIPE	LEACHATE COLLECTION	T(45-30)
LEACHATE TK 103 24" RISER PIPE	LEACHATE COLLECTION	T(45-31)

NOTE:

1. SEE SHEET 1 FOR NOTES, SYMBOL LIST AND REFERENCE DRAWINGS.

NACE CORROSION SPECIALIST
NAME [illegible] 2277
DATE 12-10-93
DWG REV NO. 0

OFFICIAL RELEASE BY WHC
DATE APR 04 1989

EDT # 101089

IMPACT LEVEL 3

WHC APPROVAL	DATE 3/7/89	U.S. DEPARTMENT OF ENERGY RICHLAND OPERATIONS OFFICE
		KAISER ENGINEERS HANFORD COMPANY
ELECTRICAL CATHODIC PROTECTION PLAN		
GROUT VAULT PAIR 218-E-16-102 & 103		
B-714	ER1050	
SHOWN	218-E-16	760
B0776458	H-2-77645	2 OF 2 REV 0

NUMBER	TITLE	NUMBER	TITLE
DRAWING TRACEABILITY LIST		DRAWING LIST / REFERENCES	

BY-DATE	BY-DATE	REV	DESCRIPTION
KEH APPROVAL			REVISIONS

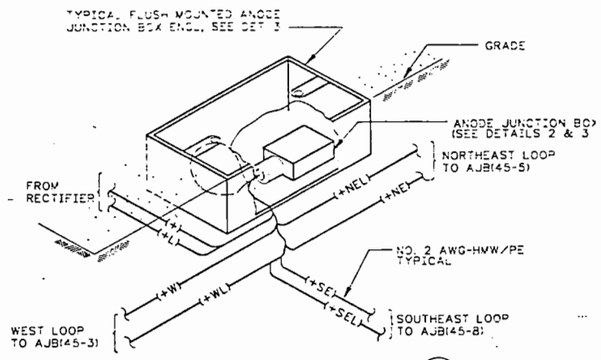

DETAIL (1) H-2-77645 SH 1 & 2

TYPICAL FLUSH MOUNTED ANODE JUNCTION BOX ENCL INSTALLATION. AJB(45-4) SHOWN, OTHERS SIMILAR

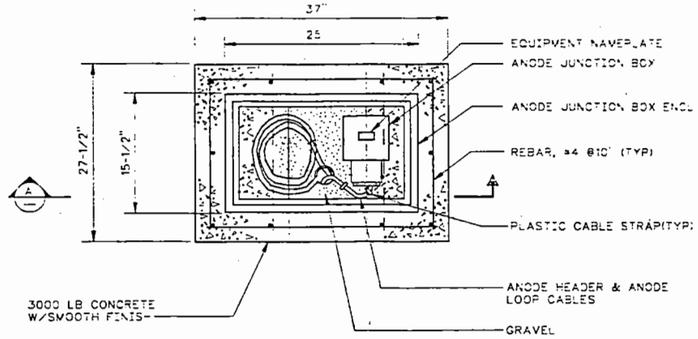

PLAN VIEW
(COVER REMOVED FOR CLARITY)

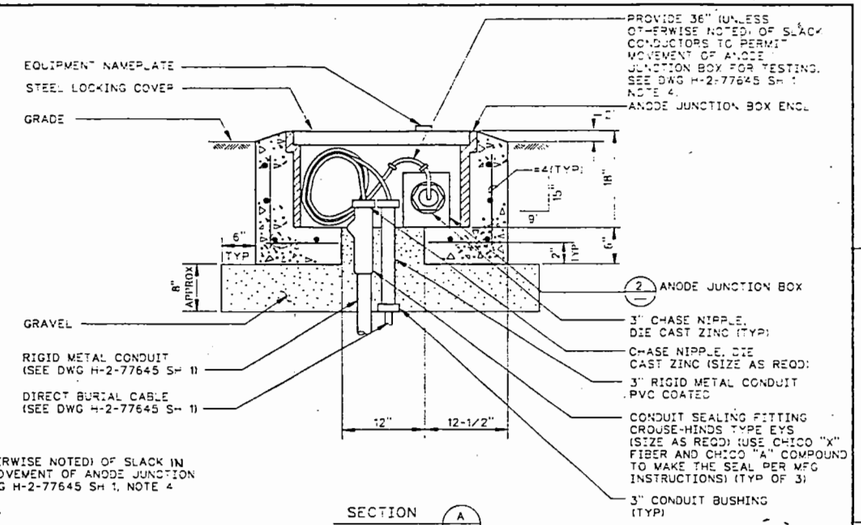

SECTION (A)

DETAIL (6)

FLUSH MOUNTED ANODE JUNCTION BOX ENCLOSURE AJB(45-9) OR AJB(45-10)

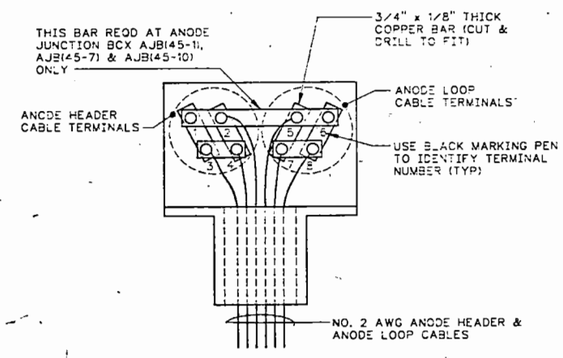

DETAIL (2)

ANODE JUNCTION BOX
TYPICAL CONNECTION DIAGRAM

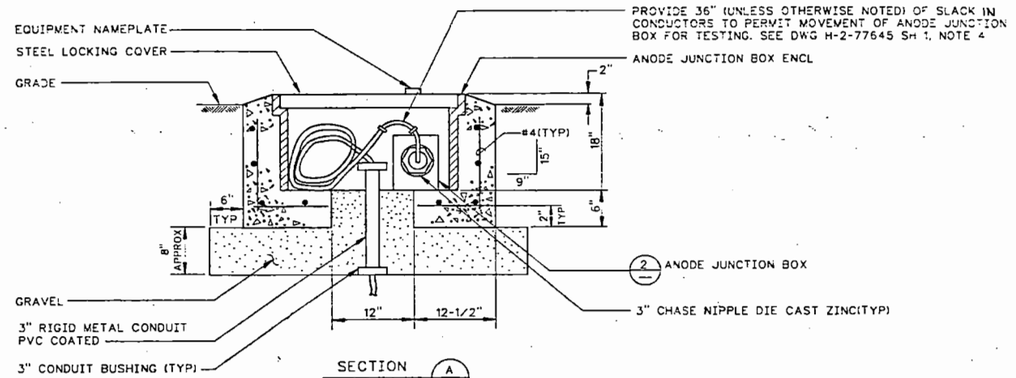

SECTION (A)

DETAIL (3)

TYPICAL FLUSH MOUNTED ANODE JUNCTION BOX ENCL

NOTES:

1. SEE CONSTRUCTION SPECIFICATION B-714-C2 FOR MATERIAL DESCRIPTION AND INSTALLATION INSTRUCTIONS.
2. ABBREVIATIONS ARE PER ANSI Y1.1 UNLESS OTHERWISE NOTED.
3. PROVIDE AND INSTALL (1) 100AF, 20AT, 3P MOLDED CASE CIRCUIT BREAKER IN EXISTING DISTRIBUTION PANELBOARD D-PB-01 CIRCUIT SPACE 9. MATCH EXISTING CIRCUIT BREAKER TYPE. ADD "CP RECTIFIER R-33" TO PANELBOARD DIRECTORY CIRCUIT SPACES 7,9 & 11.

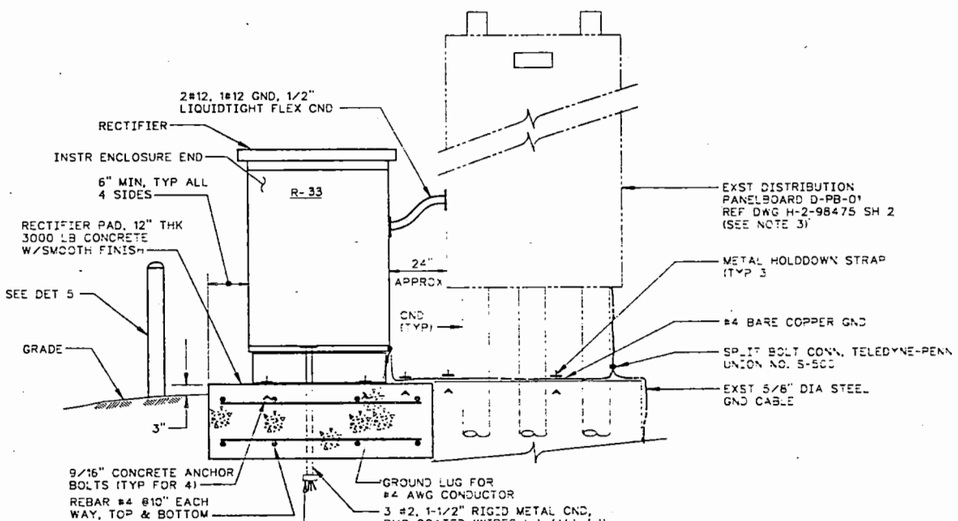

DETAIL (4) H-2-77645 SH

RECTIFIER INSTALLATION

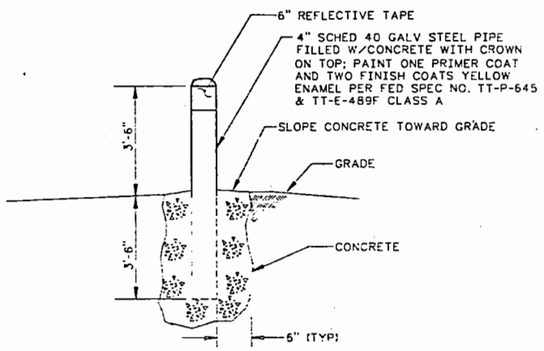

DETAIL (5)

GUARD POST
TYP FRONT & BACK
EDGE OF RECTIFIER

NACE CORROSION SPECIALIST
NAME W.G. Gerlach
DATE 12-10-87
DWG REV NO. 0

OFFICIAL RELEASE BY WHC
DATE APR 04 1989

3-3-87 REV 0

EDT # 101089

IMPACT LEVEL 3

WHC APPROVAL	U.S. DEPARTMENT OF ENERGY RICHLAND OPERATIONS OFFICE
	KAISER ENGINEERS HANFORD COMPANY
	ELECTRICAL CATHODIC PROTECTION DETAILS
PROJECT TITLE	GROUT VAULT PAIR 218-E-16-102 & 103
PROJ	B-714
NO	ER1060
SCALE	NONE
BLDG	218-E-16
INDEX	780
DRAWING NUMBER	H-2-77646
SHEET	1
OF	1
REV	0

NUMBER	TITLE
H-2-98475	SH 2- ELECTRICAL DETAILS
H-2-77573	DRAWING LIST

DRAWING TRACEABILITY LIST — REFERENCES

REV	DESCRIPTION	REV BY DATE
	KEH APPROVAL	

REVISIONS

MICROFILMED: BY-DATE BY-DATE
APPROVAL
COMMENT REVIEW

DATE: 9-23-87 11-4-1986 9-3-1988 8-3-1988 8-1-1988 8-1-1988 8-1-1988 3-17-1988 3-17-1988 3-17-1988

B077646A

7-USE-CLASSIFIED DATA

~~NE CAD~~

9011776037 7

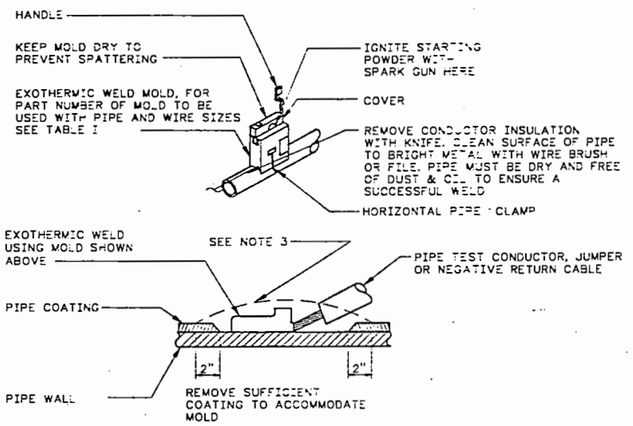

DETAIL 1
TYP HORIZONTAL EXOTHERMIC WELD

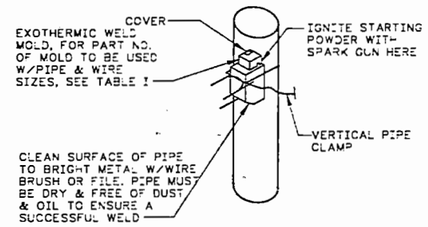

DETAIL 2
TYP VERTICAL EXOTHERMIC WELD

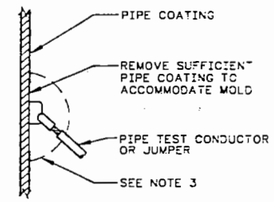

TABLE I			
CNDCT SIZE	PIPE SIZE	WELDER PART NO	WELD METAL
#4	4" HORIZ	CAHAA-1LB	CA-15
#6	4" HORIZ	CAHAA-1H	CA-15
#4	24" VERT	CAVST-1L	CA-25
#6	24" VERT	CAVST-1H	CA-15

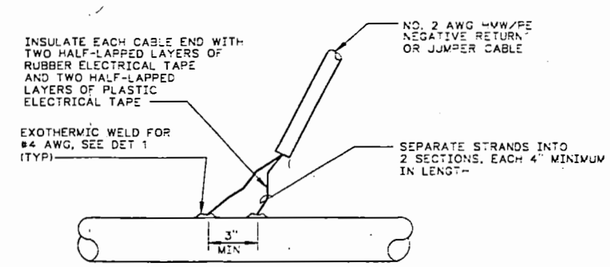

DETAIL 4
CONNECTION OF NEGATIVE RETURN OR JUMPER CABLE TO PIPE

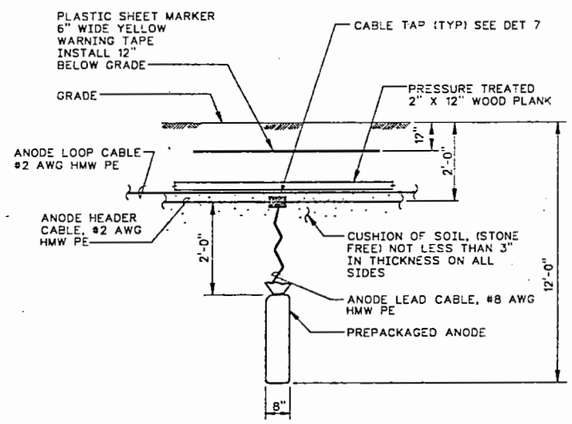

DETAIL 5
VERTICALLY INSTALLED ANODE

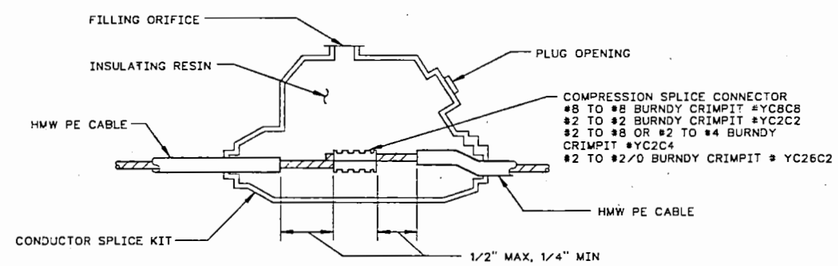

DETAIL 6
CABLE SPLICE

NOTES:

1. SEE CONSTRUCTION SPECIFICATION B-714-C2 FOR MATERIAL DESCRIPTION AND INSTALLATION INSTRUCTIONS.
2. ABBREVIATIONS ARE ANSI Y1.1 UNLESS OTHERWISE NOTED.
3. WELD AND SURROUNDING PIPE COATING SHALL BE COATED WITH ONE LAYER OF COLD APPLIED COAL TAR, KOPPERS CO. BITUMASTIC #50 FOLLOWED BY A 9"x 9" LAYER OF WOVEN GLASS FIBER FABRIC OWENS-CORNING "GLASFAB" OR PERMA GLAS-MESH. TYPE 213 ASPHALT SATURATED COTTON MEMBRANE FABRIC. THE FABRIC SHALL BE WORKED INTO THE COAL TAR. AN ADDITIONAL LAYER OF COAL TAR FOLLOWED BY ADDITIONAL FABRIC SHALL BE APPLIED. A FINAL COAT OF COAL TAR SHALL COMPLETE THE INSTALLATION. IF PIPE IS COATED, THE PATCH SHALL OVERLAP THE COATING ALL AROUND A MINIMUM OF 2". IF PIPE IS BARE, THE PATCH SHALL OVERLAP ALL EXPOSED COPPER WIRE & WELD MATERIAL A MINIMUM OF 2".

DETAIL 8
JUMPER BETWEEN PIPES

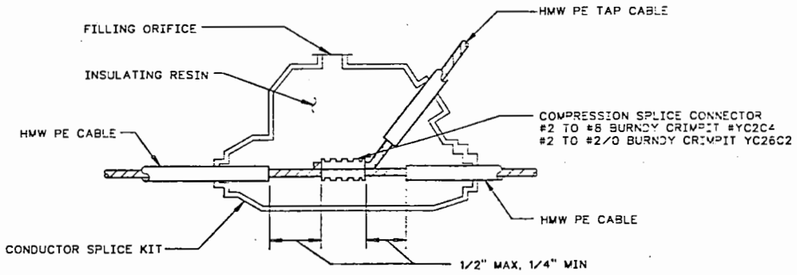

DETAIL 7
CABLE TAP

NACE CORROSION SPECIALIST
NAME [illegible]
DATE 6-20-89
DWG REV NO. 0

OFFICIAL RELEASE BY WHC
DATE APR 04 1989

EDT # 101089

REV C 3-31-89

IMPACT LEVEL 3

DRAWING TRACEABILITY LIST			
NUMBER	TITLE	REFERENCES	
		H-2-77573	DRAWING LIST
		NEXT USED ON H-2-77573	NUMBER / TITLE

REVISIONS				
BY-DATE	BY-DATE	RCV BY DATE	DESCRIPTION	REV
APPROVAL	KEH APPROVAL			
COMMENT REVIEW				

MICROFILMED

		DATE
WHC APPROVAL BY MD NORTHY		3-30-89
PROJ ENGR	JP McLAUD	8-1-1988
DRAWN BY	KH Dennison	8-3-1988
APPROVED BY	JE BEED	8-3-1988
SAFETY	RW ITEN	8-1-1988
APPROVED BY	D PARTHREE	8-1-1988
APPROVED BY ARC	C SUBLETT	8-1-1988
DESIGNED BY	GP McDONALD	8-1-1988
DRAWN BY	JB LS JONES	3-25-1988
DESIGNED BY	WC ATKINS	3-25-1988
CAD FILE	B077647A	
CAD DWG	K:\BV-ACD-9.0.AA	

U.S. DEPARTMENT OF ENERGY
RICHLAND OPERATIONS OFFICE
KAISER ENGINEERS HANFORD COMPANY

ELECTRICAL CATHODIC PROTECTION DETAILS

PROJECT TITLE: GROUT VAULT PAIR 218-E-16-102 & 103

PROJ	WO	JOB
B-714	ER1060	

SCALE	BLDG	INDEX
NONE	218-E-16	780'

DRAWING NUMBER	SHEET	OF	REV
H-2-77647	1	1	0

~~HE-CAD~~ 11002E

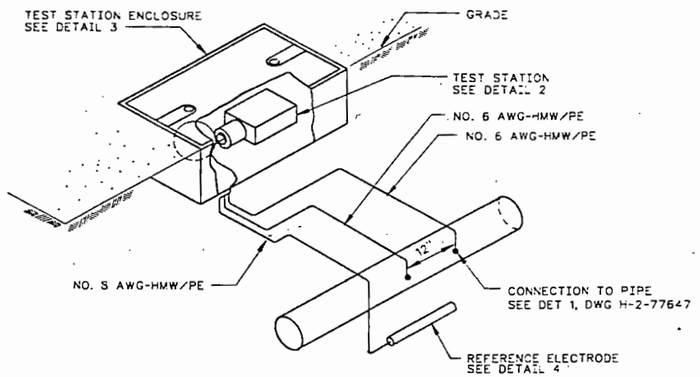

DETAIL (1) H-2-77645 SH 1 & SH 2
TYPICAL FLUSH MOUNTED TEST STATION INSTALLATION

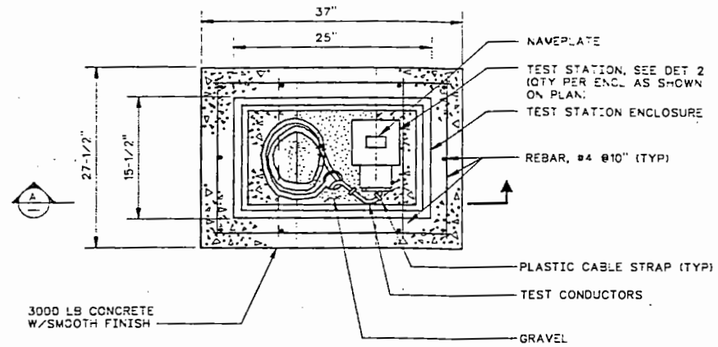

PLAN VIEW
(COVER REMOVED FOR CLARITY)

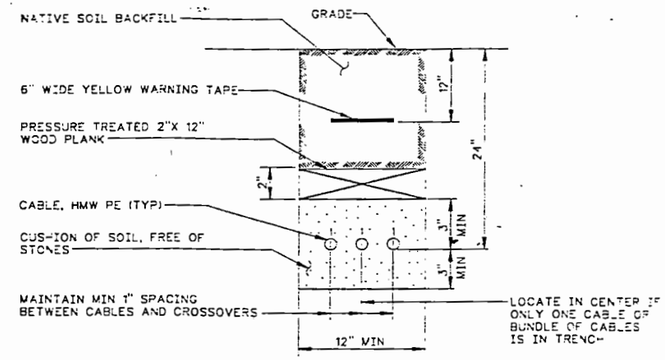

DETAIL (6)
DIRECT BURIED CABLES

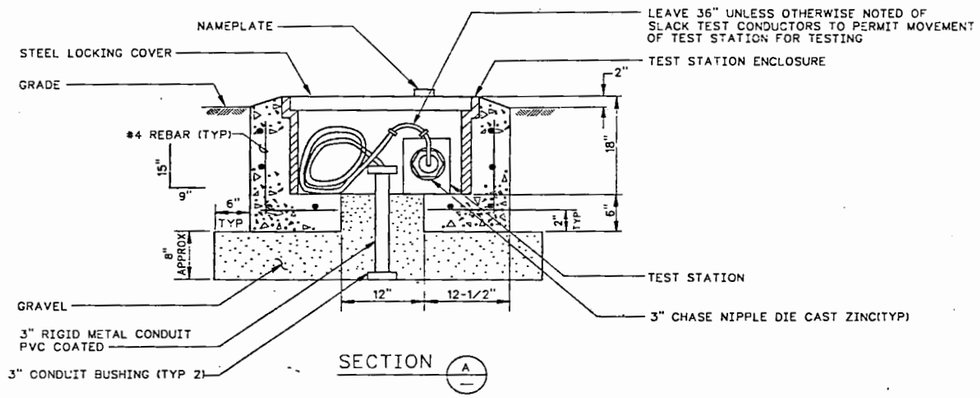

SECTION (A)

DETAIL (3)
TYPICAL FLUSH MOUNTED TEST STATION INSTALLATION

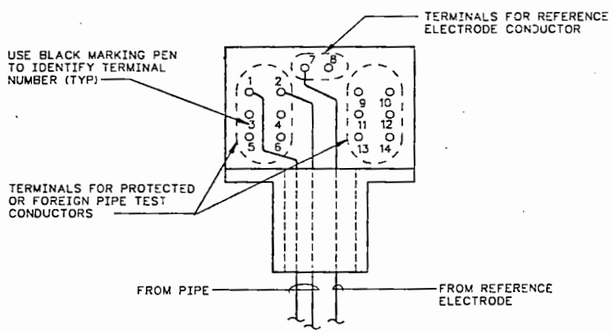

DETAIL (2)
TEST STATION TYP CONNECTION DIAGRAM

NOTE: EACH TEST STATION WILL ACCOMMODATE TEST CONDUCTORS FROM A MAXIMUM OF (6) PIPES AND (2) REFERENCE ELECTRODES

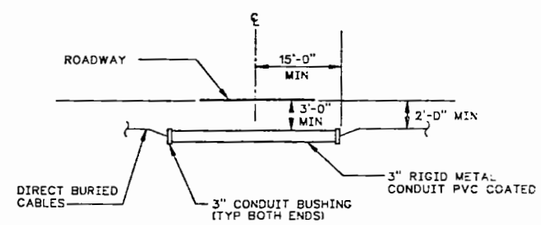

DETAIL (7) H-2-77645 SH 1
TYPICAL ANODE HEADER & ANODE LOOP CABLE INSTALLATION UNDER ROAD

NOTES:

1. SEE CONSTRUCTION SPECIFICATION B-714-C2 FOR MATERIAL DESCRIPTION AND INSTALLATION
2. ABBREVIATIONS ARE PER ANSI Y1.1 UNLESS OTHERWISE

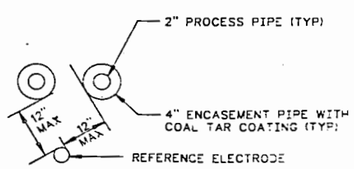

DETAIL (4)
TYP LOCATION OF REFERENCE ELECTRODE

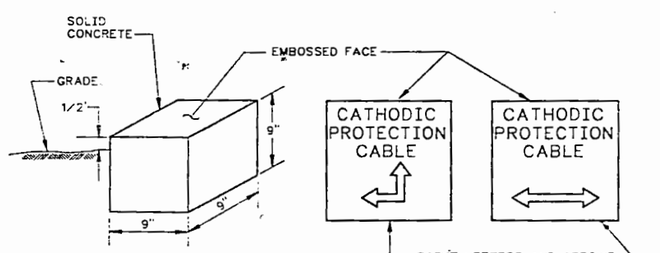

DETAIL (5)

NACE CORROSION SPECIALIST
NAME
DATE
DWG REV NO.

OFFICIAL RELEASE BY WHC
DATE APR 04 1989

EDT # 101089

IMPACT LEVEL 3

WHC	APPROVAL	DATE	U.S. DEPARTMENT OF ENERGY RICHLAND OPERATIONS OFFICE
BY MD NORT			KAISER ENGINEERS HANFORD COMPANY
PROJ ENGR			ELECTRICAL CATHODIC PROTECTION DETAILS
DRAWN	JE BREED	1988	
APPROVED BY	RM ITEM	1988	
SAFETY	D PARTHREE	1988	
APPROVED BY	C SUBLETT	1988	
DESIGNED	D MCDONALD	1988	PROJECT TITLE: GROUT VAULT PAIR 218-E-16-102 & 103
DRAWN BY	LS JONES	1988	PROJ B-714 / WO ER1060 / JOB
DESIGNED BY	WC ATKINS	1988	SCALE NONE / BLDG 218-E-16 / SENDER 780
CAD FILE	B077648A		DRAWING NUMBER H-2-77648 / SHEET 1 / OF 1 / REV 0
CAD DWG	KEPM ACD-9.0-NN		

NUMBER	TITLE	NEXT USED ON
H-2-77573	DRAWING LIST	
	REFERENCES	

DRAWING TRACEABILITY LIST

BY-DATE	BY-DATE	REV BY DATE	DESCRIPTION	REV
APPROVAL	KEH APPROVAL DATE		REVISIONS	
COMMENT REVIEW				

MICROFILMED

DISTRIBUTION

Number of Copies		
ONSITE		
9	U.S. Department of Energy-Richland Operations Office	
	D. L. Duncan (7)	A6-95
	R. J. NeVarez	A6-80
	DOE-RL Reading Room	A1-65
2	Kaiser Engineers Hanford	
	J. D. Cloud	TCPC/5-10-N/1100
	Pacific Northwest Laboratory	
	PNL Library	P8-55
22	Westinghouse Hanford Company	
	S. R. Briggs	R3-27
	J. S. Hill (4)	H4-55
	S. A. Janicek	H4-17
	S. M. Price	H4-57
	J. E. Van Beek	R1-48
	J. A. Voogd (4)	B2-10
	Central Files	L8-04
	EDMC (6)	H4-51
	Publications Services (3)	L8-07

9011776038 0