AR TARGET SHEET

The following document was too large to scan as one unit, therefore, it has been broken down into sections.

EDMC#:	0050684
SECTION:	1 of 2
DOCUMENT #:	HNF-MR-0541, Draft B
TITLE:	Preliminary Safety Assessment Transfer of 100-K Basin Sludge Into DST 241-AW-105

HNF-MR-0541

0050684

DRAFT
Rev. B

PRELIMINARY SAFETY ASSESSMENT - TRANSFER OF K BASIN SLUDGE INTO DOUBLE-SHELL TANK 241-AW-105

May 30, 1997

MAY 1999
RECEIVED
EDMC

Prepared for
Duke Engineering Services, Hanford Inc.
Richland, Washington

Pacific Northwest National Laboratory
Richland, Washington

APPROVED FOR PUBLIC RELEASE

PRELIMINARY SAFETY ASSESSMENT - TRANSFER OF K BASIN SLUDGE INTO DOUBLE-SHELL TANK 241-AW-105

May 30, 1997

P. M. Daling
M. D. Danielson
J. C. Lavender
Y. Liu
H. K. Phan
R. H. V. Gallucci

Prepared for
Duke Engineering and Services, Hanford Inc.
Richland, Washington

Pacific Northwest National Laboratory
Richland, Washington

HANFORD PROJECT OFFICE
JUN 7 1997
ENVIRONMENTAL PROTECTION AGENCY

RELEASE AUTHORIZATION

Document Number:	HNF-MR-0541, DRAFT B
Document Title:	Preliminary Safety Assessment - Transfer of K Basin Sludge Into Double-Shell Tank 241-AW-105 (Draft B - May 30, 1997)
Release Date:	May 30, 1997

This unclassified document was reviewed in accordance with DOE Order 1430.1D, "Scientific and Technical Information Management," and is:

APPROVED FOR PUBLIC RELEASE

V. L. Birkland 5/30/97

V. L. Birkland
Lockheed Martin Services, Inc.
Document Control Services/Clearance

LEGAL DISCLAIMER. This report was prepared as an account of work sponsored by an agency of the United States Government. Neither the United States Government nor any agency thereof, not any of their employees, nor any of their contractors, subcontractors or their employees, makes any warranty, express or implied, or assumes any legal liability or responsibility for the accuracy, completeness, or any third party's use or the results of such use of any information, apparatus, product, or process disclosed, or represents that its use would not infringe privately owned rights. Reference herein to any specific commercial product, process, or service by trade name, trademark, manufacturer, or otherwise, does not necessarily constitute or imply its endorsement, recommendation, or favoring by the United States Government or any agency thereof or its contractors or subcontractors. The views and opinions of authors expressed herein do not necessarily state or reflect those of the United States Government or any agency thereof.

CONTENTS

ACRONYMS xi
1.0 INTRODUCTION AND SUMMARY 1.1
1.1 BACKGROUND 1.1
1.2 OBJECTIVE AND SCOPE 1.1
1.3 SUMMARY 1.3
1.3.1 Risk Perspective 1.3
1.3.2 Controls 1.11
1.3.3 Safety Classifications of Systems, Structures, and Components 1.16
1.4 CONCLUSIONS 1.16
2.0 APPROACH 2.1
2.1 OVERALL SAFETY ASSESSMENT APPROACH 2.1
2.2 HAZARDS IDENTIFICATION AND ANALYSIS 2.1
2.3 DESIGN BASIS ACCIDENT ANALYSIS 2.5
2.4 PRELIMINARY SAFETY CLASS EVALUATION 2.7
3.0 SYSTEM DESCRIPTION 3.1
3.1 SLUDGE TRANSPORTATION SYSTEM 3.1
3.1.1 General 3.1
3.1.2 Packaging and Container 3.1
3.1.3 Transport Trailer 3.3
3.1.4 Support Equipment 3.4
3.2 SLUDGE RECEIVING STATION 3.4
3.3 AW TANK FARM DESCRIPTION 3.6
3.3.1 Structure of Double-shell Tanks 3.6
3.3.2 241-AW Tank Farm Description 3.11
3.3.3 Process Description 3.28
3.3.4 Safety Support Systems 3.30
3.3.5 Utility Distribution Systems 3.33
3.3.6 Auxiliary Systems and Support Facilities 3.34
APPENDIX 3A AW TANK FARM DESIGN CRITERIA 3.37
4.0 PRELIMINARY HAZARDS ANALYSIS 4.1
4.1 HAZARD IDENTIFICATION 4.1
4.2 PRELIMINARY HAZARDS ANALYSIS 4.4
5.0 EXTRINSIC HAZARDS 5.1
5.1 PRELIMINARY ASSESSMENT OF EXTRINSIC HAZARDS 5.1
5.1.1 Aircraft Impact from Richland Airport 5.1
5.1.2 Aircraft Impact from Tri-Cities Airport 5.2
5.2 PRELIMINARY ASSESSMENT OF NATURAL PHENOMENA HAZARDS . 5.3
5.2.1 Flood 5.3
5.2.2 Wind 5.4
5.2.3 Earthquake 5.5
5.2.4 Volcanic Activity 5.6
5.2.5 Tornadoes 5.7

5.2.6 Lightning 5.8
5.2.7 Snow Loading 5.10
5.2.8 External Fires 5.10
REFERENCES 5.11
6.0 SELECTION OF EVALUATION-BASIS ACCIDENT SCENARIOS 6.1
6.1 DEVELOPMENT OF COMPREHENSIVE LIST OF ACCIDENT SCENARIOS 6.1
6.2 SELECTION OF EVALUATION-BASIS ACCIDENT SCENARIOS 6.8
7.0 ACCIDENT ANALYSIS 7.1
7.1 DESCRIPTION OF ACCIDENT ANALYSIS APPROACH 7.1
7.2 DESIGN BASIS ACCIDENT ANALYSIS 7.19
7.2.1 Transfer Line Spray Leaks 7.22
7.2.2 Transfer System Ruptures/Pool Release 7.34
7.2.3 Shipping Container Failure Without Fire 7.43
7.2.4 Shipping Container Failure With Fire 7.63
7.2.5 Tank AW-105 Overpressurization 7.70
7.2.7 Uranium Metal Pyrophoricity 7.113
7.2.8 Criticality Safety Summary 7.124
7.3 PRELIMINARY HAZARD CATEGORIZATION 7.127
REFERENCES 7.129
8.0 PRELIMINARY CLASSIFICATION OF SYSTEMS, COMPONENTS, AND STRUCTURES 8.1
9.0 SAFETY MANAGEMENT SYSTEM 9.1
9.1 STANDARDS/REQUIREMENTS IDENTIFICATION 9.1
9.2 CRITICALITY PROTECTION 9.2
9.3 RADIOLOGICAL PROTECTION 9.2
9.4 HAZARDOUS MATERIAL PROTECTION 9.3
9.5 RADIOACTIVE AND HAZARDOUS MATERIAL WASTE MANAGEMENT . . 9.4
9.6 TESTING, SURVEILLANCE, AND MAINTENANCE 9.5
9.7 OPERATIONAL SAFETY 9.5
9.8 TRAINING AND PROCEDURES 9.6
9.9 HUMAN FACTORS 9.7
9.10 QUALITY ASSURANCE 9.7
9.11 EMERGENCY PREPAREDNESS 9.8
9.12 DECONTAMINATION AND DECOMMISSIONING 9.9
9.13 MANAGEMENT, ORGANIZATION, AND SAFETY PROVISIONS 9.9
REFERENCES 9.11
10.0 ITEMS REQUIRING FURTHER RESOLUTION 10.1
10.1 SLUDGE CHEMICAL AND PHYSICAL PROPERTIES 10.1
10.2 SLUDGE TRANSPORTATION SYSTEM 10.2
10.3 SLUDGE RECEIVING SYSTEM 10.2
10.4 RESOLUTION OF CRITICALITY SAFETY ISSUE 10.2

APPENDIX A GENERAL DESIGN REQUIREMENTS
APPENDIX B SUMMARY OF OCCURRENCES
APPENDIX C PRELIMINARY HAZARDS ANALYSIS TABLES
APPENDIX D HAZARDOUS CHEMICAL CONSEQUENCE SPREADSHEET
APPENDIX E HVAC SYSTEM FAULT TREE ANALYSIS
APPENDIX F THE CORROSION OF URANIUM IN A DOUBLE-SHELL TANK ENVIRONEMENT
APPENDIX G FLAMMABLE GAS CONCENTRATION IN AW-105 AFTER ADDITION OF K BASIN SLUDGE

TABLES

1.1. Comparison of K Basin Sludge and TWRS BIO Accident Analyses 1.6
1.2. Summary of Accident Scenario Frequencies, Consequences, and Proposed Controls 1.12
1.3. Safety Classifications of Systems, Structures, and Components 1.17
2.1. "Generic" Hazard Source Checklist 2.3
2.2. Frequency Categories Used in PHA 2.4
2.3. Consequence Categories Used in the PHA 2.4
2.4. Radiological Risk Guidelines 2.7
2.5. Toxicological Risk Guidelines 2.7
3.1 Current Status of AW Tank Farm Storage Tanks 3.13
3.2 Double-Shell Tank Farm 241-AW Facilities List 3.14
3.3 Process Design Criteria for the 241-AW Double-Shell Tank Farm 3.29
4.1. K Basin Sludge and AW-105 Waste Hazard Comparison Summary Table 4.2
4.2. Hazard Checklist for Sludge Container Receipt and Transport 4.5
4.3. Hazard Checklist for Connection to Sludge Receiving Station 4.8
4.4. Hazard Checklist for Offload Operations 4.10
4.5. Hazard Checklist for Storage of K Basin Sludge in a DST 4.12
5.1. Probability of an Aircraft Crash 5.2
5.2. Estimated Ash Depth at the Hanford Site from Major Eruptions 5.7
6.1. Relationship Between Accident Families and the Accident Scenarios Identified in the PHA 6.10
7.1. Volumes and Radionuclide Compositions of K Basin Sludge Materials 7.7
7.2. Chemical Composition of K Basin Sludge Materials 7.9
7.3. Radionuclide Composition of Worst-Case Shipment of K Basin Sludge 7.11
7.4. Radionuclide Composition of Bulk Sludge (K East and K West) 7.12
7.5. Chemical Analyte Concentrations in Worst-case K Basin Sludge 7.13
7.6. Chemical Analyte Composition of Bulk Sludge (K East and K West) 7.14
7.7. Toxic Chemical Screening Information 7.15
7.8. Toxic Chemical Concentrations in Worst-Case K Basin Sludge 7.17
7.9. Radiological Unit Doses for Release of K Basin Sludge 7.19
7.10. Toxic Chemical Unit Doses and Maximum Release Quantities and Release Rates 7.20
7.11. Parameters Used in SPRAY Code Calculations 7.29
7.12. SPRAY Code Results 7.30
7.13. Radiological Spray Leak Consequences and Comparison to Risk Evaluation Guidelines . . 7.32
7.14. Hazardous Chemical Spray Release Consequences and Comparison to Guidelines 7.32
7.15. MICROSHIELD and MICROSKYSHINE Input Parameters for Calculating External Radiation Dose Rate From a Pool of Spilled Sludge 7.39
7.16. Total Radiation Doses from Transfer System Pool Release Accident 7.41
7.17. Hazardous Material Release Consequences and Comparison to Risk Evaluation Guidelines for the Pool Release 7.42
7.18. Branch-point Probabilities Used in Event Tree Quantification - Mitigated Case 7.50
7.19. Unmitigated Accident Scenario and Outcome Bin Frequencies 7.53
7.20. Mitigated Accident Scenario and Outcome Bin Frequencies 7.58
7.21. Total Radiation Doses from Sludge Shipping Container Accident Without Fire 7.60

7.22. Hazardous Material Release Consequences and Comparison to Risk Evaluation Guidelines for the Transportation Accidents 7.61
7.23. Radiological Consequence Analysis Results for Sludge Shipping Container Accident With Fire 7.67
7.24. Hazardous Chemical Consequence Analysis Results for Sludge Shipping Container Accident With Fire 7.68
7.25. Overpressurization Event Tree Outcome Descriptions 7.73
7.26. Event Tree Header Descriptions and Branch Probabilities 7.75
7.27. Initiating-Event PRESS-Class Accident Frequencies for Unmitigated Accident 7.76
7.28. Primary Ventilation System Fault Tree Minimal Cut Sets 7.81
7.29. Mitigated Event Tree Header Descriptions and Branch Probabilities 7.82
7.30. Initiating-Event PRESS-Class Accident Frequencies for Mitigated Accident 7.83
7.31. Probabilities and Frequencies of Ignition Sources 7.92
7.32. Deflagration Rates Related to Various Ignition Sources 7.101
7.33. Top Event Descriptions and Probabilities 7.106
7.34. Outcome Descriptions 7.106
7.35. Unmitigated Accident Frequencies 7.108
7.36. Mitigated Accident Frequencies 7.109
7.37. Tank AW-105 Waste Composition Limits 7.117
7.38. Tank AW-105 Supernate Composition 7.118
8.1. Safety Classification of Individual Components 8.2

FIGURES

2.1. Illustration of K Basin Sludge Safety Assessment Approach 2.2
2.2. PHA Format Definition 2.6
3.1. Map of Hanford Site 3.40
3.2. Conceptual Illustration of the Sludge Transportation System 3.41
3.3. Conceptual Drawing of the Sludge Receiving Station 3.42
3.4. Sludge Receiving Station Overground Transfer Line 3.43
3.5. Tank Farm Configuration at the 200 East Area 3.44
3.6. Graphical Representation of a Double-Shell Tank 3.45
3.7. Tank Penetration Schematic 3.46
3.8. Typical Central Pump/Distributor Pit 3.47
3.9. A Slurry Distributor 3.48
3.10. Typical Annulus Pump Pit 3.49
3.11. Typical Leak Detection Pit 3.50
3.12. DST Ventilation Details 3.51
3.13. Typical Primary Tank Exhaust System 3.52
3.14. 241-AW Tank Farm Annulus Exhaust System 3.53
7.1. General Overview of the Accident Analysis Approach 7.2
7.2. Schematic of the Sludge Receiving Station 7.23
7.3. Event Tree - Unmitigated Sludge Transportation System Accidents 7.48
7.4. Event Tree - Mitigated Sludge Transportation System Accidents 7.55
7.5. PRESS Unmitigated Event Tree 7.74
7.6. PRESS Mitigated Event Tree 7.77
7.7. Primary Ventilation System Fault Tree (Top Logics) 7.80
7.8. Event Tree for Flammable Gas Deflagration 7.105

ACRONYMS

AC - Administrative Control
AFC - Adjustable Frequency Controller
ALARA - As Low As Reasonable Achievable
ALC - Airlift Circulator
ANSI - American National Standards Institute
ARF - Airborne Release Fraction
ARR - Airborne Release Rate
ASHRAE - American Society of Heating, Refrigeration, and Air-Conditioning Engineers
ASME - American Society of Mechanical Engineers
ASTM - American Society for Testing and Materials
BPA - Bonneville Power Administration
CAM - Continuous Air Monitor
CASS - Computer-Automated Surveillance System
COB - Clean Out Box
DBA - Design Base Accident
D&D - Decontamination and Decommissioning
DCRT - Double-Contained Receiver Tanks
DOE - Department of Energy
DOE-RL - Department of Energy / Richland (Field Office)
DOV - Diaphragm-Operated Valve
DP - Differential Pressure
DST - Double Shell Tank
EDE - Effective Dose Equivalent
EHR - Encasement Hydrotest Riser
ENRAF - Manual tape for measuring liquid level
EPDM - Ethylene-Propylene-Diene Monomer
ERPG - Emergency Response Planning Guide
FIC - Food Instrument Corporation
FM - Factory Mutual
HEPA - High Efficiency Particulate Air
HFD - Hanford Fire Department
HVAC - Heating, Ventilating, and Air Conditioning
ICE - Instrument, Control, and Electrical
IOSR - Interim Operational Safety Requirement
ISB - Interim Safety Basis
ITRS - Initial Tank Retrieval System
LCO - Limiting Condition for Operation
LDR Leak-Detection Riser
LFL - Lower Flammability Limit
LIT - Level-Indicating Transmitter
M&O - Management and Operations
MCC - Motor Control Center
MEI - Maximum Exposed Individuals

NDA - Non-Destructive Assay
NFPA - National Fire Protection Association
NHTSA - National Highway Traffic Safety Administration
NLSI - National Lightning Safety Institute
ND/PD - PUREX Neutralized Cladding Removal Waste, transuranic (TRU) waste
NRC - U.S. Nuclear Regulatory Commission
ORR - Operational Readiness Review
OGT - Overground Transfer
OIS - Operation Interface System
PC - Personal Computer
PD - Pneumatic Diaphragm
PHA - Preliminary Hazards Analyses
PIV - Post Indicator Valve
PLC - Programmable Logic Controller
PNNL - Pacific Northwest National Laboratory
PUREX - Plutonium-uranium Extraction
PVC - Polyvinyl Chloride
PW - Process Waste
RFAR - Radio Frequency Alarm Reporter
RF - Respirable Fraction
RWS - Raw Water Supply
SAPHIRE - Systems Analysis Programs for Hands-on Integrated Reliability Evaluations
SARP - Safety Analysis Report for Packaging
SCE - Safety Class Evaluation
SHMS - Standard Hydrogen Monitoring System
SL - Slurry Line
SMS - Safety Management System
SNF - Spent Nuclear fuel
SpG - Specific Gravity
SRS - Savannah River Site
SSC - System, Structures, and Component
STS - Sludge Transfer System
SWS - Sanitary Water Supply
TC - Thermocouple
TDS - Temperature Display
TMACS - Tank Monitoring and Control System
TQ - Threshold Quantity
TSR - Technical Safety Requirement
TWRS - Tank Waste Remediation System
UBC - Uniform Building Code
ULD - Unit-Liter Dose
WF - Weight Factor
WHC - Westinghouse Hanford Company

1.0 INTRODUCTION AND SUMMARY

The purpose of this document is to evaluate the safety of equipment and operations to off-load and store K Basin sludge materials in a double-shell tank (DST) at the Hanford Site.

1.1 BACKGROUND

The K Basins, built in the early 1950s, have stored N Reactor fuel underwater from 1978 through 1987. In 1992, the decision to deactivate the Plutonium-Uranium Extraction (PUREX) Plant left approximately 2,100 metric tons of N Reactor Spent Nuclear Fuel (SNF) in the K Basins with no means for near term processing. A significant fraction of the SNF has become degraded due to cladding breaches during reactor discharge and corrosion that has continued during storage.

The N Reactor fuel in the K East Basin is stored in open top canisters, some which have closed bottoms and others which have screened bottoms. The open canisters release fission products into the basin water, that, combined with environmental particulate matter have settled to the bottom as sludge. Depths exceeding three feet have been measured in some locations. Using sludge depth measurements, the total volume of K East Basin floor, pit, canister, and fuel wash sludges was estimated to be about 58.8 m^3. The total volume of K West Basin pit, canister, and fuel wash sludge was estimated to be about 10.7 m^3.

952 MTU of spent fuel are stored in 3815 closed canisters in the K West Basin. The sludge in the closed K West Basin consists of predominantly fuel pieces and oxidation products.
The fuel in the sealed canisters may have corroded to a lesser degree than the fuel in the K East Basin. The K West Basin pit sludge is believed to contain dust and sand blown in from the surrounding environment and oxides from storage racks, piping, and canisters.

The basin water and sludge may leak to the environment due to the age and condition of the basins. It is desired to remove the sludge, transport it to, then pump it into, a Tank Waste Remediation System (TWRS) Double Shell Tank (DST) located in the 200 East Area. This preferred sludge path forward alternative is documented in WHC-SD-SNF-SP-001, *Westinghouse Hanford Company Recommended Strategy for K-Basin Sludge Disposition*, Revision 0 (Alderman 1995).

1.2 OBJECTIVE AND SCOPE

The scope of this safety assessment covers activities associated with the transfer of K Basin sludge from a shipping container to a storage tank in the Hanford Site's tank farms. These activities include construction and installation of any necessary equipment and facilities; conducting the actual transfer operations; and intermediate storage. The scope of this assessment includes two new equipment items that will be designed and constructed to perform the transfer activity at the tank farm. These include the Sludge Transportation System, which will be used to transfer the sludge from the K-Basins to double-shell tank 241-AW-105 (AW-105), and the Sludge Receiving Station, which provides the flowpath for the sludge off-load operation. The Sludge Transportation system consists primarily of a trailer-mounted shipping container, transfer pump, and flexible hose. The Sludge Receiving Station consists of a hose connector and overground, double-encased transfer line leading from the connector to the 241-AW-105 valve pit. This safety assessment addresses sludge offload and storage operations in the tank farm.

The scope of this analysis includes off-load and storage of the following materials:

- K East basin floor, pits, and canister sludge
- K West basin canister and North Loadout pit sludge
- K Basin water
- K East and K West basin fuel wash sludge

Characterization data on some of these materials (KE canister/fuel wash and KW Basin sludges) is still being developed. This document was based on the best available characterization data; conservative, bounding assumptions were made where characterization data was unavailable.

The scope of this assessment does not include safety analyses of the facilities and operations necessary to retrieve sludge from the K Basins and transfer it to a shipping container, any processing to be performed at K Basin, or over-the-road transport from K Basins to the AW tank farm. The following will be addressed in separate safety documentation:

- Retrieval, processing, and any necessary pretreatment of the sludge at K Basins will be addressed via a change to the *K Basins Safety Analysis Report*, WHC-SD-WM-SAR-062 (Meichle 1996).

- Over-the-road transport will be addressed in a Safety Analysis Report for Packaging (SARP) for the Sludge Transportation System. However, the safety of the conceptual Sludge Transportation System, as it relates to the tank farm interface, is addressed in this document.

- Pretreatment of the sludge to produce a different chemical or physical form is not addressed in this document. Separate studies are being conducted to investigate alternative pretreatment and storage configurations. When the final choice of alternative is made, the authorization basis amendment documentation will be modified to address the selected pretreatment and storage configuration.

Certain aspects of retrieval, processing, and transportation safety are included in this assessment, such as necessary chemical adjustments to the sludge to make it compatible with AW-105 tank wastes and the structural integrity of the Sludge Transportation System to resist tank farm accidents.

The objective of this safety assessment is to address the health and safety aspects of all phases of this scope. The format and content of the safety assessment will be in accordance with the requirements specified in WHC-CM-4-46, *Safety Analysis Manual*, WHC-IP-0842, Section 5.10, *Authorization Basis Amendments and Annual Updates* and WHC-CM-6-32, *Safety Analysis and Nuclear Engineering Work Procedures*.

This draft report documents the initial safety assessment of the sludge off-load activity within the tank farm. The report includes a complete description of the safety analyses. This includes the identification and evaluation of potential hazards and hazardous conditions associated with the transfer of K Basin sludge into tank 241-AW-105. A systematic approach involving development of hazard source checklists and Preliminary Hazards Analyses (PHA) was applied to the conceptual off-load operations and equipment. The resulting information formed the basis for development of potential accident scenarios and selection of evaluation-basis accidents for subsequent detailed analysis in other tasks of this study. Detailed analyses of the frequencies and consequences of the evaluation basis

accidents were then performed. This included quantitative evaluations of mitigated and unmitigated accident scenarios and a comparison of the frequency and consequence information to the established risk evaluation guidelines. These comparisons helped identify recommended controls that could be implemented to reduce or maintain risk below the guidelines. The identified controls are preliminary in that the designs of the Sludge Transportation System and Sludge Receiving Station are not yet complete and are subject to change. The final version of this document will contain more explicit control requirements. A preliminary safety class evaluation was also performed based on the results of the detailed accident analyses. Finally, the Hanford contractor's safety management systems is designed to ensure that required controls and mitigation measures are appropriately administered as described.

1.3 SUMMARY

This section summarizes the key results and conclusions derived from the preliminary safety assessment. Included is a discussion of the principal risks of K Basin sludge offloading and storage activities. K Basin sludge offloading and storage risks are also presented relative to other tank farm risks. In addition, this section includes descriptions of proposed controls to maintain the risks of sludge offloading and storage within the safety envelope defined in this preliminary safety assessment and a comparison to controls identified in tank farm safety documentation.

1.3.1 Risk Perspective

This section places the risks of K Basin sludge offloading and storage operations in perspective with other tank farm risks. Comparisons are made between the hazards and accident analysis results presented in this document and corresponding results from the *Tank Waste Remediation System Basis for Interim Operation* (TWRS BIO; LMHC 1997). Also, summaries of the hazards and accidents that are unique to sludge offloading and storage operations are presented in this section.

1.3.1.1 Hazards Identification and Analysis

The two main elements of hazards identification and analysis included a comparison of the physical and chemical characteristics of K Basin sludge materials and the waste presently stored in DST 241-AW-105 and preparation of a Preliminary Hazards Analysis (PHA). This section presents a summary of the risk perspectives derived from these elements of the preliminary safety assessment.

Comparison of Chemical and Physical Properties

The comparison of AW-105 waste and K Basin sludge properties demonstrated that some characteristics are similar, such as TRU content, absence of a separable organic layer, total organic carbon content, and viscosity. Other characteristics are different such that K Basin sludge represents some unique hazards and some hazards would be exacerbated by adding K Basin sludge to the AW-105 tank wastes. These hazards are described below:

- **Specific gravity (SpG):** The SpG of K Basin sludge is anticipated to be higher than the SpG of AW-105 solids. The waste SpG is related to the potential to generate and trap gas in the storage tank. An estimate of flammable gas generation and retention potential was developed in this safety assessment.

- **Particle size**: The average particle size of K Basin sludge will be larger than the AW-105 solids particle size. In addition, K Basin sludge may contain particles with diameters as large as 0.25 in. This introduces a potential criticality issue caused by preferential settling of like-sized particles, a large fraction of which may contain uranium. There are currently no particle size limits or restrictions for acceptance in tank farms, other than those that may be imposed for criticality prevention.

- **Fissile Concentration**: Overall, the fissile concentration of K Basin sludge is greater than AW-105 wastes.

- **Uranium metal content**: A fraction of the K Basin sludge materials may contain unreacted uranium metal. Unreacted uranium, particularly small particles, represent a potential pyrophoric chemical reaction hazard that could lead to an exothermic chemical reaction. In addition, uranium metal corrosion (i.e., oxidation) generates hydrogen gas, leading to potential flammable gas deflagration/explosion hazard. There are currently no specific uranium metal content limits for tank wastes.

- **Sand (SiO_2) content**: K Basin sludge contains a significant amount of sand that could potentially affect the heat transfer properties of the commingled wastes. There are currently no sand or SiO_2 content limits for tank wastes.

- **Nitrate/nitrite concentration**: The nitrate and nitrite concentrations in K Basin sludge are below the tank farm corrosion control specifications. This creates the potential for accelerating corrosion of the AW-105 tank liner, resulting in reduced lifetime and increased likelihood of tank leaks. K Basin sludges are anticipated to be chemically adjusted to meet the tank farm's corrosion control specification.

- **pH**: The pH of K Basin sludge is approximately neutral whereas AW-105 wastes are required to be highly alkaline (prevents Pu-239 and Pu-240 from becoming solubilized). Consequently, the pH of the K Basin sludges will have to be adjusted prior to its transfer into AW-105.

- **Cs and Sr content**: High Cs-137 and Sr-90 concentrations may represent an external radiation hazard when K Basin sludges are within the Sludge Transportation System or being pumped through the Sludge Receiving Station. The Cs-137 and Sr-90 content of the sludge and the applicable external dose rate limitations are being considered in the designs of these systems.

- **Polychlorinated biphenyl (PCB) content**: K Basin sludge characterization activities have identified the presence of PCBs in some samples. The toxic chemical analysis in this safety assessment demonstrates that PCB concentrations are below levels that would pose a significant health hazard.

- **Radionuclide content**: Unit-Liter Dose (ULD) values were calculated for K Basin sludge and compared to ULDs for DST wastes. It was determined that the sludge solids ULD was higher than DST solids and the sludge liquids ULD was lower than DST liquids. A

composite solid/liquid ULD was found to be higher for K Basin sludge than a comparable ULD for DST solids/liquids composite (1/3 DST solids and 2/3 DST liquids).

- **Chemical compatibility**: Chemical compatibility of K Basin sludge and AW-105 wastes must be ensured to reduce the potential for exothermic chemical reactions when the two waste materials are commingled. Mixing studies with actual K Basin sludge and AW-105 solids and supernate samples are required to determine whether or not commingling these wastes would result in a chemical reaction leading to a temperature change, pH change, hydroxide consumption, precipitation, etc.

In general, the most significant unique safety issues with the K Basin sludge materials and safety issues relative to commingling the sludges with AW-105 wastes are potential exothermic chemical reactions (pyrophoric and incompatible chemical reactions), flammable gas generation and retention, criticality safety (including chemical reactions that could increase reactivity and preferential settling of like-sized particles). The waste compatibility and criticality safety program requirements are currently being addressed and requirements will be identified to minimize the likelihood and/or consequences of these hazards.

Hazards Analysis

The hazards associated with sludge offloading and storage operations were identified and evaluated using the Preliminary Hazards Analysis (PHA) technique. One of the outcomes of the PHA is a comprehensive list of accident scenarios which was then screened to identify the evaluation basis accidents that are subsequently analyzed in detail. In general, the list of evaluation basis accidents is consistent with the accidents selected in the TWRS BIO for detailed analysis with two notable exceptions, which may be considered as unique accidents associated with sludge offloading and storage. These unique accident scenarios are: 1) failure of the Sludge Transportation System, both with and without fires, and 2) pyrophoric chemical reactions. The remaining evaluation basis accidents addressed here are not unique to K Basin sludge offloading and storage, although specific properties of the sludge may increase or decrease the risks of these other scenarios (see next section for highlights of the accident analysis perspectives).

1.3.1.2 Accident Analysis

Each section below compares the design basis accident analyses for sludge offloading and storage activities with analogous accident scenarios in the TWRS BIO. A summary comparison of accident frequencies and radiological consequences, is presented in Table 1.1. Toxic and corrosive/irritant consequences were also calculated in the accident analysis but are not shown in Table 1.1. In general, they follow the same trends that the radiological consequences follow. The risk perspectives summarized in Table 1.1 are described in more detail in the following sections.

Spray Leak From Transfer System

Spray leaks from overground transfer systems were addressed in the TWRS BIO and in this preliminary safety assessment. The frequencies of spray leaks are the same in both documents; there was no technical reason to believe that spray leaks of K Basin sludge would occur at a higher frequency than transfers of other material into the tanks. Furthermore, no credit was taken in the

Table 1.1. Comparison of K Basin Sludge and TWRS BIO Accident Analyses

Safety Basis	Frequency		Onsite Consequences, Rem		Offsite Consequences, Rem		Comments
	Unmitigated	Mitigated	Unmitigated	Mitigated	Unmitigated	Mitigated	
Spray Leak							
PSA	Anticipated	Anticipated	5,700	4.5	1.1	8.8E-04	Sludge unit dose is larger than DST waste but shorter release duration than TWRS BIO offsets the higher unit dose.
TWRS BIO	Anticipated	Anticipated	15,000	46	21	3.7E-03	
Pipe Rupture, Pool Formation							
PSA	Anticipated	Anticipated	450	0.40	0.89	7.2E-04	Sludge represents slightly higher risk due to higher unit dose and similar release quantities.
TWRS BIO	Anticipated	Anticipated	330	36	0.23	4.4E-04	
Package Failure Without Fire							
PSA	Unlikely	<Extremely Unlikely	450	0.40	0.89	7.2E-04	Not a valid comparison (sludge container accident versus leak from railcar) due to large differences in the magnitudes of the releases. Information only.
TWRS BIO	Unlikely	Not Evaluated	0.85	Not Evaluated	4.7E-04	Not Evaluated	
Package Failure With Fire							
PSA	Extremely Unlikely	< Extremely Unlikely	29,000	NA	23	NA	This scenario is "unique" to K Basin sludge transfer
TWRS BIO	No analogous accident scenario in TWRS BIO.						
Tank Overpressure Due to Incompatible Chemical Reaction							
PSA	Anticipated	Unlikely	0.13	0.13	8.8E-05	8.8E-05	Sludge represents smaller risk than in TWRS BIO due to larger volume of sludge to heat up and larger heat transfer area in AW-105 versus a DCRT.
TWRS BIO	Anticipated	Anticipated	27	0.013	0.018	9.0E-06	

Table 1.1. Comparison of K Basin Sludge and TWRS BIO Accident Analyses

Safety Basis	Frequency		Onsite Consequences, Rem		Offsite Consequences, Rem		Comments
	Unmitigated	Mitigated	Unmitigated	Mitigated	Unmitigated	Mitigated	
Flammable Gas Deflagration							
PSA	Anticipated	< Extremely Unlikely	14.2	NA	0.012	NA	Risks in PSA slightly lower than BIO; Unit dose for Basin water is lower than unit dose for DST liquids that was used in BIO to calculate gas deflagration consequences.
TWRS BIO	Anticipated	< Extremely Unlikely	19	NA	0.016	NA	
Pyrophoric Chemical Reaction in Storage Tank							
PSA	Unlikely	< Extremely Unlikely	487	NA	0.40	NA	Sludge unit dose larger than DST solids and sludge source term larger than organic solvent fire source term. On the other hand, sludge source term smaller than organic-nitrate fire source term, resulting in lower consequences. Controls focus on accident prevention not consequence mitigation for both sludge and DST waste fires. Consequences provided for risk perspective only; AW-105 has not been designated as an organic-nitrate tank.
TWRS BIO							
- Solvent Fire	Unlikely	Unlikely	2.33	NA	2.0E-03	NA	
- Organic-Nitrate Fire	Unlikely	Extremely Unlikely	8,600	NA	7.1	NA	
Criticality							
PSA	Criticality accident frequencies and consequences not calculated.						An ongoing *Criticality Feasibility Study* is being conducted to determine criticality safety requirements for several sludge storage alternatives.
TWRS BIO	Extremely Unlikely	Extremely Unlikely	40	NA	2.5E-05	NA	

PSA = *Preliminary Safety Assessment - Transfer of K Basin Sludge into Double-Shell Tank 241-AW-105.*
TWRS BIO = *Tank Waste Remediation System Basis for Interim Operation.*
NA = Not available. Mitigated scenario consequence calculations were not performed for <EU accident scenarios or scenarios for which consequences were not quantified in the TWRS BIO.

accident analyses in either document for mitigation measures that would reduce the frequencies of spray leaks.

The consequences of spray leaks were calculated in both documents using similar methodologies. Adjustments were made in this document to more closely approximate sludge characteristics and the Sludge Transfer System design parameters relative to typical waste transfers in the tank farm. It was determined that the consequences of spray leak accidents involving K Basin sludge are slightly less than spray leaks involving DST solids that were calculated in the TWRS BIO. The consequences are approximately the same even though the ULDs for sludge are higher than the ULDs for DST wastes. The difference in ULDs is offset by a shorter release duration that leads to a smaller release quantity calculated for sludge leaks. The shorter release durations for K Basin sludge arise from shorter transfer (pumping) times relative to typical tank farm transfer durations.

Pipe Rupture and Formation of Liquid Pool

This scenario is not unique to sludge transfer and storage operations and was addressed in the TWRS BIO. In both the TWRS BIO and this preliminary safety assessment, the frequencies of this accident scenario were determined to be the same; i.e., Anticipated. The consequences, on the other hand, are higher for releases of K Basin sludge, due primarily to the higher unit dose from releases of sludge compared to releases of DST wastes. As a result, the risks of this accident scenario are slightly higher for transfers of K Basin sludge than for transfers of DST wastes.

Package Failure without Fire

Shipping container failures due to vehicular accidents in the tank farms were not analyzed in detail in the TWRS BIO[1] and so may be considered as a "unique" accident associated with K Basin sludge offloading operations. The unmitigated frequency of this accident was determined to be Unlikely based on general highway traffic accident statistics for heavy combination trucks, similar to the conceptual Sludge Transportation System. When tank farm road conditions and Hanford Site-specific truck accident statistics are factored into the analysis, the calculated frequency is reduced to Extremely Unlikely.

The consequences of package failures without fire were determined to be the same as a transfer system failure and subsequent formation of a liquid pool on the ground (see above). The consequences of K Basin sludge package failures are not analogous to a leak from a railcar at the 204-AR unloading facility due primarily to the relatively low radionuclide and toxic chemical concentrations of liquid waste shipments unloaded at the 204-AR facility, radionuclide inventory limits imposed on the railcars by their SARPs, and the type of scenario evaluated. Therefore, no valid comparison can be made here and the comparison provided in Table 1.1 is for information only.

---

1 An accident involving leakage from a railcar during transfers at the 204-AR Waste Unloading Facility was analyzed in the TWRS BIO. However, the transportation packages and waste unloading systems are substantially different than those to be used for K Basin sludge.

Package Failure With Fire

The TWRS BIO did not analyze in detail a package failure and subsequent fire involving a transportation package. This scenario was analyzed here because of the possibility of high onsite and offsite consequences and the need to explore potential controls if the risk of such an event involving the Sludge Transportation System was determined to be unacceptable. Accident scenarios involving fires at the 204-AR Unloading Facility were identified but screened out during the evaluation basis accident selection process that supports the TWRS BIO. Consequently, as with the package failure without fire scenario, this can be considered as a "unique" accident scenario, unlike any scenarios analyzed in detail in the TWRS BIO.

The unmitigated frequency of this scenario was determined to be Extremely Unlikely, at highest, and most likely Beyond Extremely Unlikely. The mitigated frequency, which took credit for Hanford-specific traffic accident parameters and vehicle-related controls in the tank farms, was determined to be Beyond Extremely Unlikely. Existing and minor proposed new controls were demonstrated to reduce the risk of this scenario to acceptable levels, given that the mitigated frequency was determined to be Beyond Extremely Unlikely. A consequence analysis was not performed for the mitigated scenario because the assumed controls reduced the frequency to incredible. However, controls established in the BIO that could limit the consequences of this scenario, including emergency response provisions for fire in a waste tank, as well as controls proposed in this documents for other reasons (e.g., provision of spill mitigation capabilities for spray leaks and pool releases), would also be capable of reducing the consequences of package failures with fires.

Tank Overpressure

Tank overpressurization due to mixing of incompatible materials (acid/base neutralization reaction) was addressed in this document and in the TWRS BIO. In the TWRS BIO, the overpressurization scenario was assumed to occur in a Double-Contained Receiver Tank (DCRT) and not in a DST as assumed here. The unmitigated frequency of the scenario in which mixing unadjusted sludge and AW-105 wastes was Anticipated. In the TWRS BIO, the unmitigated and mitigated frequencies were Anticipated, which includes consideration of DCRT operational assumptions and the selected mitigation strategy described below. The mitigated frequency of AW-105 overpressurization from sludge additions was Unlikely. Credit was taken in the mitigated K Basin sludge scenario analysis for the waste compatibility program, written procedures with verification that sludge pH is appropriately adjusted, and a requirement to sample the adjusted sludge before it is offloaded into the tank. A different mitigation approach was taken in the TWRS BIO, in which credit was taken for release mitigation by HEPA filters on the DCRT. This was determined not to be necessary for AW-105 to safely receive and store the sludge.

The consequences of this scenario in which K Basin sludge material is released from AW-105 were determined to be substantially smaller than the consequences of the DST waste released from a DCRT. This is due primarily to the much larger volume of sludge that must be heated to generate aerosols from the neutralization reaction relative to the volume of DST wastes that are heated in a neutralization reaction in a DCRT. In fact, it was determined that commingled K Basin sludge and DST wastes would not boil under worst-case conditions whereas DSTs wastes in the TWRS BIO were determined to boil. In addition, the DST provides a much more significant heat transfer area than a

DCRT, resulting in condensation of a larger fraction of sludge in AW-105 than would condense in a DCRT. Therefore, overall, the risks of this accident scenario involving K Basin sludge were judged to be slightly smaller than similar accidents involving DST wastes.

Flammable Gas Deflagration

The risks of flammable gas deflagrations were determined in the TWRS BIO to be "significantly above guidelines with existing and available controls." For deflagrations in a DST headspace, risks to offsite receptors were below guidelines but the guidelines for onsite receptors were exceeded. The conclusion reached here is consistent with the TWRS BIO. However, a slight increased risk of gas deflagration occurs as a result of storing K Basin sludge in AW-105. This slight increase in risk arises from introducing an additional ignition source into the tank. This additional ignition source is a potential pyrophoric reaction that could result from dryout of the sludge in the tank. This increased likelihood is not significant relative to the estimated frequency of gas deflagrations; i.e., Anticipated. However, a control specific to preventing this additional ignition source hazard was proposed.

Flammable gas controls proposed in WHC-SD-WM-JCO-007 (Grigsby and Leach 1996) focus on preventing ignition of potential flammable gas atmospheres (in addition to mitigating steady-state accumulation of a flammable atmosphere and monitoring requirements). These proposed controls were assumed to be implemented with respect to K Basin sludge offloading and storage operations. The proposed controls are designed to ensure that steady-state accumulation of a flammable gas atmosphere is prevented by operation of the AW-105 ventilation system, and the hazards associated with gas retention are managed through implementation of equipment and work controls that prevent spark sources from contacting potential flammable atmospheres.

Pyrophoric Chemical Reaction

Pyrophoric chemical reactions in a DST were not addressed in the TWRS BIO as tank wastes are not considered to be vulnerable to such a reaction. The sludge, on the other hand, may contain unreacted metallic uranium, and may also contain uranium hydrides and zirconium metal. All three materials are pyrophoric under certain conditions. Consequently, pyrophoric reactions represent a "unique" hazard with respect to K Basin sludge.

The hazards of a pyrophoric reaction are related to the reaction being; 1) a potential ignition source for a flammable gas deflagration and, 2) a potential initiator for a fire in a waste tank. The flammable gas ignition source potential and associated controls were addressed above. Waste fires, including organic solvent fires and organic-nitrate reactions, were addressed in the TWRS BIO but ignition of pyrophoric materials was not specifically addressed. Therefore, the potential pyrophoric nature of the sludge may be considered to increase the risk of fires in a DST. However, the increased risk is very small when controls are implemented to prevent pyrophoric reactions. The proposed pyrophoric reaction controls were designed to prevent initiation of the reaction, primarily by ensuring that the sludges are underwater at all times (it may also be necessary to manage heat transfer from the sludge to prevent the pyrophoric materials from heating to the spontaneous ignition temperature).

Criticality Safety

One of the known hazards associated with K Basin sludge is its fissile material content. A preliminary criticality safety summary in this document identified issues affecting criticality safety that must be resolved. These include potential mechanisms that could segregate and concentrate fissile materials, the effects of neutron poison additions, and the effects of relatively large particle sizes. An ongoing *Criticality Feasibility Study* is being performed to identify the criticality requirements for each of several storage alternatives for K Basin sludge. The storage alternatives may or may not require chemical pretreatment of sludge before it can be offloaded into a storage tank. Chemical pretreatment of the sludge is presently emerging as one of the more effective alternatives for achieving criticality safety. This alternative may also alleviate some of the other safety-related issues associated with K Basin sludge offloading and storage, including pyrophoricity, hydrogen gas generation and retention, and particle size.

1.3.2 Controls

Table 1.2 contains a summary of the results of the K Basin sludge safety assessment, specifically the accident scenarios evaluated and their corresponding unmitigated and mitigated accident frequencies and consequences. The table also presents a summary of the proposed controls to be established to limit either the frequencies or consequences of the potential accidents. The controls that are in **bold type** are existing controls or are proposed controls that resulted from the *Tank Waste Remediation System - Basis for Interim Operation* (TWRS BIO, LMHC 1997) and are being implemented. The other controls listed in the table would be new requirements in the tank farm that would arise from K Basin sludge transfer, offloading, and storage activities. The existing and new controls listed in Table 1.2 are discussed below:

- *NEW CONTROL - Spill stabilization capabilities*: Spill stabilization equipment and capabilities, including operator training, were credited in the spray leak, pipe rupture, and transportation cask accident scenarios for limiting resuspension release durations to 2 hrs, and thus mitigates the consequences of these scenarios. No specifications are given on the spill stabilization equipment, except that they should be readily available during K Basin sludge transfers, are effective at preventing resuspension of radioactive material from a dried pool, and that operators are trained in spill stabilization. Spill stabilization equipment may also include respiratory protection to minimize operator exposures during spill stabilization activities.

- *NEW CONTROL - Restrict speed in tank farm*: Travel speed was assumed to be restricted to below 30 mph in the tank farm to reduce the likelihood of shipping system failures that could result from vehicular accidents. The 30 mph speed limit was determined based on the impact test requirements assumed to be imposed on the shipping system. This is somewhat more specific than Administrative Control 5.10.2.b, "Ignition Controls," related to restricting speed in the tank farms (LMHC 1997).

- *NEW CONTROL - Sample Sludge to Verify Conformance to Tank Farm Waste Acceptance Requirements*: The accident analyses assumed an extensive experimental and analytical program would be conducted to determine whether or not K Basin sludge materials are compatible with the waste currently in AW-105. It was further assumed that the waste compatibility program would identify a number of chemical adjustments to be made to the sludges before it could be offloaded to the tank. Examples of chemical adjustments would

Table 1.2. Summary of Accident Scenario Frequencies, Consequences, and Proposed Controls

Accident Scenario	Frequency(a)		Onsite Consequences, Rem				Offsite Consequences, Rem				Proposed Controls(b)
	Unmitigated	Mitigated	Unmitigated	Guideline	Mitigated	Guideline	Unmitigated	Guideline	Mitigated	Guideline	
Spray Leak	A	A	5,700	0.5	4.5	0.5	1.1	0.1	9E-04	0.1	1) Written procedures with verification, including verification of flow path and jumper alignment 2) Placement of pump pit cover blocks, concrete shielding, glove bags (over connectors) 3) Perform functional test 4) Spill stabilization capabilities
Pipe Rupture	A	A	450	0.5	0.40	0.5	0.89	0.1	7E-04	0.1	1) Written procedures with verification, including verification of flow path and jumper alignment 2) Placement of pump pit cover blocks, concrete shielding, glove bags (over connectors) 3) Perform functional test 4) Spill stabilization capabilities
Shipping container accident without fire	U	<EU	450	5	0.40	NA(c)	0.89	0.5	7E-04	NA(c)	1) Restrict speed in tank farm 2) Spill stabilization capabilities 3) Written procedures, driver training 4) Type B packaging system or Hanford equivalent 5) Limits imposed by SARP on radioactive concentrations, volumes, etc.
Shipping container with fire	EU	<EU	2.9E+4	10	2.9E+4	NA(c)	23	4	23	NA(c)	1) Restrict speed in tank farm 2) Spill stabilization capabilities 3) Written procedures, driver training 4) Type B packaging system or Hanford equivalent 5) Limits imposed by SARP on radioactive concentrations, volumes, etc.

Table 1.2. Summary of Accident Scenario Frequencies, Consequences, and Proposed Controls

Accident Scenario	Frequency(a)		Onsite Consequences, Rem				Offsite Consequences, Rem				Proposed Controls(b)
	Unmitigated	Mitigated	Unmitigated	Guideline	Mitigated	Guideline	Unmitigated	Guideline	Mitigated	Guideline	
Tank overpressurization	A	U	0.13	0.5	0.13	5	9E-05	0.1	9E-05	0.5	**1) Waste compatibility program** 2) Sample sludge to verify compliance with tank farm waste acceptance criteria prior to shipment **3) HVAC system testing and maintenance** **4) Operator training, written procedures to deal with loss of HVAC air balance** **5) HVAC CAMs shut off fans when rad release limits are exceeded** **6) Prefilter and HEPA filter monitoring and replacement (< 200 mrem/hr)**
Flammable gas deflagration - HEPA failure	A	<EU	14.2	0.5	14.2	NA(c)	0.012	0.1	0.012	NA(c)	See WHC-SD-WM-JCO-007 (e.g., **HVAC system operability** prevents buildup to LFL from steady-state release; **ignition source controls** prevent deflagration from episodic releases; **flammable gas monitoring** during manned work activities and waste intrusive activities). Also, TWRS BIO states **emergency response procedures** required to provide direction for fire response and recovery activities (organic solvent fire).
Pyrophoric reaction	A	<EU	490	0.5	490	NA(c)	0.4	0.1	0.4	NA(c)	**1) Operating procedures with verification on indexing the slurry distributor** 2) Minimum supernate depth to prevent dryout **3) Waste compatibility program** **4) Emergency response procedures for fire**

(a) A = Anticipated (1 to 1E-2/yr); U = Unlikely (1E-2 to 1E-4/yr); EU =Extremely Unlikely (1E-4 to 1E-6/yr); and <EU = below Extremely Unlikely (< 1E-6/yr)

(b) Controls in **bold print** are existing controls; others are new controls resulting from K Basin Sludge transfers.

(c) No risk evaluation guidelines are given for accident scenarios with frequencies less than EU.

include adjusting the pH, nitrate and nitrite concentrations to meet tank corrosion specifications, addition of iron for criticality prevention, and other potential adjustments. These adjustments were assumed to be made at K Basins prior to shipping the material to the tank farm and would be sampled and analyzed to verify conformance with tank waste acceptance requirements prior to shipping. This will ensure that the variability in sludge compositions is appropriately accounted for before the material is offloaded into the tank. This will reduce the likelihood that the tank would become overpressurized and fail the HEPA filters or tank dome as a result of greater-than-predicted gas generation rates or chemical reactions that release large quantities of gas and heat. This control was listed as "new" even though AC 5.12.2.c requires compatibility evaluations prior to waste transfers into a DST (LMHC 1997). It was listed as new because of the specific assumption made in this preliminary safety assessment that sampling and verification of compatibility is performed for each shipment of K Basin sludge.

- *NEW CONTROL - Minimum supernate depth*: A proposed control on minimum supernate depth in the tank was identified to prevent sludge dryout after it is offloaded into the tank. Dryout of the sludge could lead to an exothermic pyrophoric reaction resulting in a tank waste fire (below extremely unlikely given the amount of moisture in the tank) or creating an ignition source for a flammable gas deflagration. However, this analysis concluded that pyrophoric reactions involving the sludge would not occur if it is maintained in a wet condition. The minimum supernate depth would be established based on conservative geometry assumptions related to the shape and size of the cone formed upon addition to the tank solids surface. Operators would need to verify the supernate depth in the tank prior to initiating offloading operations and confirm that the minimum supernate depth is met or exceeded. This could be done with existing tank instrumentation. Sludge offloading procedures would need to incorporate this step; independent verification would also be prudent.

- *EXISTING CONTROL - Written Procedures with Verification*: Written procedures are currently required for conducting all waste transfers, including verification of flowpath and jumper alignment.

- *EXISTING CONTROL - Placement of Covers over Transfer Line, Pits*: The TWRS BIO contains requirements to ensure pump pit covers, shielding systems, and any other covers assumed to mitigate spray releases are in place prior to initiating transfers of waste into the tank.

- *EXISTING CONTROL - Perform Functional Test*: The TWRS BIO requires performance of functional tests of transfer lines prior to initiating transfers. This ensures that the lines are properly configured to avoid mistransfers and that previously-undetected leaks in the piping system are identified before radioactive materials are introduced into the line.

- *EXISTING CONTROL - Type B or Equivalent Packaging System*: The Sludge Transportation System was assumed to be designed to Type B or Hanford-equivalent packaging standards. These standards specify the minimum conditions the packaging systems must withstand without compromising package integrity or containment functions. Credit was taken in the accident analysis for the probability that an accident in the tank farm would exceed these

conditions. A Safety Analysis Report for Packaging (SARP) will be prepared for the Sludge Transportation System to document the packages response to these minimum accident conditions. The SARP would also identify controls to be applied to the sludge and loading/offloading operations to ensure the assumptions in the SARP are not exceeded. These controls would most likely take the form of limitations that protect source term assumptions, such as radionuclide concentration limits, inventory limits, volumes, nonflammability, and thermal limitations. This control would therefore serve to reduce the likelihood of an accidental release as well as mitigate consequences, should a release occur.

- *EXISTING CONTROL - Waste Compatibility Program*: Waste to be transferred into a tank must be verified to be compatible with the existing waste in the tank. This program is designed to prevent exothermic chemical reactions and physical incompatibilities that could lead to an accidental release during waste transfers and subsequent storage. Waste compatibility evaluations are currently being performed for commingled AW-105 tank waste and K Basin sludge materials. Any requirements derived from waste compatibility testing, primarily chemical adjustments, were assumed to be conducted at K Basin prior to shipment, and then the material was assumed to be sampled and verified, as discussed above.

- *EXISTING CONTROL - HVAC Operability, Testing, and Maintenance*: The HVAC system performs several important safety functions, including maintaining a negative pressure balance to provide containment, filtration of radioactive material prior to releasing gaseous effluent to the atmosphere, and dilution and removal of flammable gases from the tank headspace. Verification that the HVAC system is functioning properly is required prior to K Basin sludge transfers. Written procedures for operators to respond appropriately to loss of HVAC conditions were also credited in the accident analysis to limit the duration of HVAC downtime, preventing steady-state accumulation of flammable gases from reaching the Lower Flammable Limit (LFL). Testing and maintenance would include monitoring and replacement of HEPA filters and prefilters (currently changed out when dose rate exceed 200 mrem/hr) as well as periodic monitoring and calibration of the ventilation Continuous Air Monitor (CAM) to ensure detection of increasing radiological releases. Verification of operability of the CAM interlock that shuts down the ventilation fans when radiological release limits are exceed was also assumed to be conducted.

- *EXISTING CONTROL - Ignition Source Controls*: As a result of the accident analyses in the TWRS BIO and flammable gas Justification for Continued Operation (JCO; Grigsby and Leach 1996), many ignition source controls have been or are being implemented to reduce the likelihood of gas deflagrations, organic-nitrate reactions, and organic solvent fires. It was concluded in this preliminary safety assessment that the likelihood of these events occurring in the tank would be increased somewhat as a result of the K Basin sludge transfers but would not change the frequency designations beyond those determined in the TWRS BIO. Therefore, it was concluded that the ignition source controls established in the TWRS BIO and flammable gas JCO, in addition to the minimum supernate depth established above, would be adequate to prevent gas deflagrations, organic-nitrate reactions, and organic solvent fires in AW-105. Note that AW-105 is not suspected of containing an organic solvent layer and contains sufficient moisture to prevent initiation of organic-nitrate reactions under all credible accident conditions.

- *EXISTING CONTROL - Flammable Gas Monitoring*: Flammable gas monitoring is required before and during manned work activities to ensure that flammable conditions do not exist in the work space. In addition, flammable gas monitoring is required for waste-disturbing activities that could lead to a GRE, such as a sludge transfer.

- *EXISTING CONTROL - Emergency Response Procedures*: Effective and timely mitigation of a release of radioactive or toxic materials from fires, gas deflagrations, liquid spills, etc., would limit the consequences of the various accident scenarios evaluated in this preliminary safety assessment. Response to spill events were addressed above in relationship to the spill stabilization capabilities. In addition, the emergency response procedures for fires and deflagrations that resulted from the TWRS BIO were assumed to be adequate to mitigate releases of commingled K Basin sludge and AW-105 tank wastes.

1.3.3 Safety Classifications of Systems, Structures, and Components

A preliminary safety class evaluation was performed to determine the appropriate safety classifications of sludge offloading related systems, structures, and components (SSCs). The preliminary safety classifications are shown in Table 1.3.

1.4 CONCLUSIONS

Four main conclusions were derived from this preliminary safety assessment and the evaluation of the risks relative to the risks addressed in the TWRS BIO. These are:

- "Unique" properties associated with K Basin sludge materials relative to DST wastes include; 1) presence of relatively large particles, 2) higher fissile material concentration than typical DST solids, and 3) presence of potentially pyrophoric materials.

- The risks of accident scenarios other than criticality can be controlled to acceptable levels that are consistent with or not significantly greater than the TWRS BIO primarily through the use of existing controls. In a few instances, additional controls were proposed to manage the hazards that are unique to K Basin sludge offloading and storage. Requirements for maintaining criticality safety are identified in the *Criticality Feasibility Study*.

- New proposed controls include providing spill stabilization capabilities and procedures/training, speed restriction in tank farm, sludge sampling prior to transportation, and maintaining minimum supernate depth in tank.

- Criticality uncertainties (particle size, chemistry, and fissile content) may lead to a requirement to treat sludge (in addition to required chemical adjustments) before it is transported to or offloaded into the DST.

Additional data and information will be needed to resolve these technical issues. These technical information needs are related to the designs of the Sludge Transportation System and Sludge Receiving Station, needs for additional sludge characterization and experimental data, and resolution of criticality safety issues.

Table 1.3. Safety Classifications of Systems, Structures, and Components

Safety Class	Safety Significant	Defense-in-Depth
Sludge Receiving Station		
- Primary aboveground piping (fixed pipe and flexible hose) - Shielding over aboveground portions of fixed piping (placement) - Portable shielding (placement) over hose - Pump pit cover block (placement) - Flexible hose connector at receiving station - Spill retention basin	- Spill stabilization equipment	- Pipe connectors in pump pit - Leak detection system - AC Power - Secondary aboveground piping
Sludge Transportation System		
- Pressure vessel - Transfer pump - Flexible hose (primary) - Flexible hose (secondary) - Flexible hose connector in transportation system - HEPA filtered vents	- None identified	- None identified

REFERENCES

Alderman, C. J. 1995. *Westinghouse Hanford Co. Recommended Strategy for K Basin Sludge Disposition*. WHC-SD-SNF-SP-001, Rev. 0. Westinghouse Hanford Co., Richland, Washington.

Grigsby J. M. and Leach C. E. 1996. *Flammable Gas/Slurry Growth Unreviewed Safety Question: Justification for Continued Operation for the Tank Farms*. WHC-SD-WM-JCO-007, REV. 0A, Westinghouse Hanford Company, Richland, Washington.

LMHC. 1997. *Tank Waste Remediation System Basis for Interim Operation*. HNF-SD-WM-BIO-001, Revision F. Lockheed- Martin Hanford Company, Richland, Washington.

Meichle, R. D. 1996. *K Basins Safety Analysis Report*. WHC-SD-WM-SAR-062 Rev. 3. Westinghouse Hanford Co., Richland, Washington.

2.0 APPROACH

This chapter describes the approach taken in this safety assessment to identify and evaluate potential accidents associated with transferring K Basin sludge into double-shell tank 241-AW-105. Section 2.1 briefly describes the overall approach to this safety assessment and Section 2.2 describes in more detail the approach taken to identify hazards and hazardous conditions as well as select the design-basis and design-basis accident scenarios for detailed evaluation.

2.1 OVERALL SAFETY ASSESSMENT APPROACH

The overall approach to the K Basin sludge safety assessment is illustrated in Figure 2.1. The first step in the assessment was to perform a comprehensive analysis to identify hazards and hazardous conditions associated with transferring K Basin sludge. A safety analysis technique referred to as Preliminary Hazards Analysis (PHA) was applied to identify and perform a qualitative evaluation of potential hazards. The next step is to select the design-basis or design-basis accident scenarios. This will be done based on a number of criteria, including a binning process based on the qualitative evaluation of accident frequencies and consequences provided in the PHA as well as other factors. A list of Design-Basis Accidents (DBA) will then be developed based on the results of the selection process. Each of these DBA will be subjected to a detailed analysis to determine its frequency and consequences. The accident prevention and mitigation information contained in the PHA is used here to assist in the development of accident frequencies. The frequency and consequence information is developed in parallel and then comes together to allow a comparison to the risk guidelines contained in WHC-CM-4-46, Rev. 1. If the "risks" (frequency-consequence pairs) are below guidelines, the accident scenario analysis would be complete and then would be documented. If the risks are above the guidelines, further analysis is performed, often involving the postulated addition of new controls and/or design features intended to reduce either the frequencies or consequences of the accidents. These design features and control measures taken credit for in the accident analysis may be the subject of Technical Safety Requirements (TSRs), as defined in DOE Order 5480.22. After the frequencies and consequences of all the accident scenarios are demonstrated to be below guidelines, the accident scenario analyses are documented and will form the safety envelope for the offload operations and equipment.

2.2 HAZARDS IDENTIFICATION AND ANALYSIS

The hazards identification and analysis activity was accomplished through application of a safety analysis technique referred to as PHA. The PHA technique was used to identify the potential hazardous conditions associated with transfer into and storage of K Basin sludge in a double-shell tank storage system and to determine the significance of potential accidents. The PHA for the sludge offload activities was performed using the "hazardous energy" concept in which potential accidents or abnormal events are represented as flows of unwanted energy between a source and receptor. Barriers between the source and receptor may be presented to prevent or restrict the flow of unwanted energy. For example, the sludge shipping container's walls are barriers because they restrict or prevent radioactive materials from "flowing" between the internal volume of the shipping container and

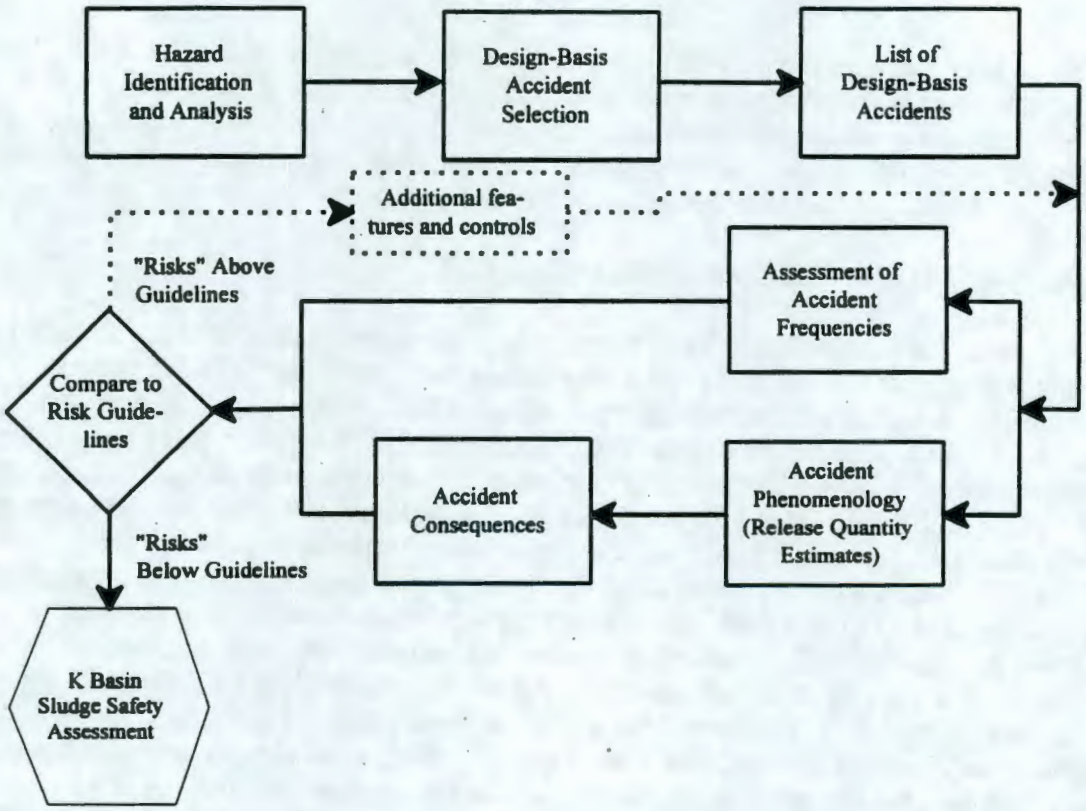

Figure 2.1. Illustration of K Basin Sludge Safety Assessment Approach

the environment. Administrative controls (e.g., operating procedures) may also be barriers as they are intended to either prevent the occurrence of an accident or reduce/control the consequences of an accident should one occur.

A checklist approach was used to identify potential hazards associated with the offload activities. A "generic" checklist taken from Hammer (1972) was used to guide the identification of hazards and ensure that a comprehensive identification of hazards was performed. This generic hazard checklist is shown in Table 2.1. Each activity involved in transferring sludge into a DST was reviewed to determine the presence or absence of each hazard on the checklist. These checklists ensured that all of the hazards associated with the offload activities are appropriately identified and documented in the PHA. In addition, hazard checklists developed in support of the TWRS BIO and FSAR were reviewed, as were tank farm occurrence reports related to failures/errors during transfers. These later two items fed information into the PHA and also helped to "validate" the hazard checklists developed for the sludge transfer activities.

The PHA documents the following preliminary information: 1) hazard or energy source; 2) event or phenomena description; 3) causes; 4) preventive and mitigative features, including engineered barriers and administrative controls (present or potential mitigation options); 5) a semi-quantitative assessment of accident frequency; and 6) a qualitative assessment of accident consequences for potentially-exposed workers, onsite receptors, and offsite receptors. The preliminary assessment of accident scenario frequencies and consequences was performed by assigning

Table 2.1. "Generic" Hazard Source Checklist

ACTIVITY: _____

Hazard	Present (Y/N)	Example(s)
Acceleration		

Other Hazards Considered

Contamination	Chemical reaction	Corrosion
Electrical	Explosion	Fire
Heat and Temperature	Low Temperature	Temperature change
Impact and Shock	Leakage	Moisture-High humidity
Moisture-Low humidity	Power source failure	Pressure-High
Pressure - Low	Radiation - Infrared	Radiation-Non-ionizing
Radiation - Ionizing	Radiation - Ultraviolet	Structural damage/failure
Toxicity	Vibration and noise	Weather and environment
Nuclear Criticality		

each scenario to categories representing ranges of frequencies and consequences. The categories used in this assessment are presented in Tables 2.2 and 2.3. The preliminary assignments of the scenarios to these ranges were based on process knowledge, knowledge of similar types of activities, types and numbers of barriers, types and numbers of component failures, and engineering judgement. Detailed analyses to refine the accident scenario frequency and consequence estimates are performed later in the assessment, as illustrated in Figure 2.1.

The PHA addresses hazards encountered during receipt and onsite transport of the shipping container at tank farms, connection of the shipping container to the tank farm Sludge Receiving Station currently being designed, the actual offload operations and long-term storage. Potential accident sequences initiated internally (i.e., initiated by failures of process equipment or systems and operators) as well as externally (such as earthquakes, floods, tornadoes, and aircraft crashes) were addressed in the PHA. Events considered included, but were not limited to, dome failure/collapse, transfer line leaks, spray leaks, criticality, waste incompatibility, elevated temperatures, tank overfill, tank overpressure, loss/reduction in shielding, and plugging/failure of transfer lines and the tank ventilation system.

Table 2.2. Frequency Categories Used in PHA

Accident Frequency Category	Frequency Category Description	Nominal Frequency Range (events per year)
F3 or Anticipated (A)	An off normal condition that individually may be expected to occur once or more during facility operation.	>1 E-02
F2 or Unlikely (U)	Individually, the condition is not expected to occur during facility operation, but collectively events in this category may occur several times.	1 E-04 to 1 E-02
F1 or Extremely Unlikely (EU)	Extremely low-probability conditions that are not expected during facility operation but that present extreme or limiting cases of faults identified as possible. This category includes design basis accidents.	1 E-06 to 1 E-04
F0 or Beyond Extremely Unlikely (<EU)	Accidents for which no credible scenario can be identified.	<1 E-06

Table 2.3. Consequence Categories Used in the PHA

Consequence Category	Description of Consequences to the Public, Onsite Personnel, or Environment
Category S3	Based on material at risk and cause(s) postulated, there is sufficient material and release energy to impact a receptor at the Site boundary.
Category S2	Based on material at risk and cause(s) postulated, there is sufficient material and energy to impact a receptor at 100 m from the source of the material at risk.
Category S1	Based on material at risk and cause(s) postulated, the release is confined to the facility where it occurred.
Category S0	Based on material at risk and cause(s) postulated, there is insufficient material released to affect facility workers.

The format used to record the PHA was derived from the PHA format used in the tank farm Final Safety Analysis Report (FSAR) under preparation and was used for consistency with that effort. The format was modified from the FSAR format to more easily define and identify hazards during the more active, operator-involved activities, and combines features of several formats. This format, illustrated in Figure 2.2, was applied to receipt and onsite transport of sludge in the tank farm, connection and offload operations, long-term storage operations, and retrieval. The information recorded in each column of the PHA table is described in Figure 2.2. In addition to the narrative description of the PHA content in Figure 2.2, the PHA for storage operations, since DST waste storage operations are addressed in existing safety analyses, considered whether or not the identified

hazards increase or reduce the likelihood or consequences of accidents already addressed in the tank farm safety documentation. If so, the hazard and associated accident scenarios were retained in this PHA. The hazard checklist that was developed for storage operations was reviewed to identify unique hazards represented by the transfer of K Basin sludge into a DST and as a check on the completeness of the completed PHA.

An important aspect of the PHA is that the accident scenario frequencies and consequences are first-order approximations. Detailed quantification of these elements was not performed at this stage of the safety assessment. The assessment of accident frequencies and consequences in the PHA is semi-quantitative is that, where possible, quantitative information in other safety documents was used to assign the scenarios to particular categories. For example, the *Tank Farm Accelerated Safety Analysis* (WHC 1995a), *Overground Transfer Line Addendum to Single-Shell Tank Safety Analysis Report* (WHC 1994), *Double-Shell Tank Farm Facility Safety Analysis Report* (WHC 1989), and other documents were consulted to provide insights on the frequency and consequence category assignments. The review of historical tank farm occurrences also provided input to this effort.

This activity supports the selection of the design-basis accidents that will be analyzed in detail in subsequent tasks. A binning process was used to document the accident scenario selection process. This involved assigning the accident scenarios identified in the PHA into bins based on the preliminary assessments of the frequencies and consequences of each accident scenario. One or more representative accident scenarios were then selected from each cell of the matrix for detailed evaluation. The accident scenarios selected are, in general, the highest-consequence or bounding scenarios from each cell of the matrix. In some cases, more than one scenario are selected from a single cell, due to the uncertainties in the composition of the materials involved in the accident, release quantities, and accident frequencies. The rationale for selecting each potential accident sequence, and for not selecting the others, is documented in this report.

2.3 DESIGN BASIS ACCIDENT ANALYSIS

The accident scenarios selected from the PHA were subjected to detailed, quantitative design of their frequencies and consequences. The accident frequency analyses were conducted using standard probabilistic risk analysis techniques, including fault tree analysis and event tree analysis. The potential source term or release quantity from each accident scenario was then calculated and the consequences of the release were determined using Hanford-specific information on receptor locations and weather conditions. Standard dose-consequence computer codes were then used to calculate the doses to maximally-exposed onsite and offsite receptors. The resulting frequency and consequence data were then compared to the WHC risk evaluation guidelines. Risk guidelines were taken from WHC-CM-4-46, Rev. 1, in accordance with DOE guidance (see Tables 2.4 and 2.5). Both mitigated and unmitigated accident scenarios were subjected to the detailed frequency and consequence calculations. The design basis accident analysare are presented in Chapter 7.

Figure 2.2. PHA Format Definition

HAZARD	PHENOMENA	CAUSES	CAUSE FREQ.	CONSEQUENCES		PREVENTION/MITIGATION		SCENARIO FREQUENCY
				OCC.	SEV.	ENGINEERING	ADMINISTRATIVE	
List the identified hazards and hazard sources from checklist(s).	Describe the result of applying the hazard to the system or activity under analysis.	XX. List potential failure or error that leads to the occurrence of the phenomena. This column briefly describes the accident scenario. Also assign unique identification number.	Estimate the frequency of encountering cause "XX" (see Table 2.2).	Does this scenario affect workers, Y/N?	Estimate accident scenario severity (see Table 2.3)	List equipment and hardware features that prevent the occurrence of the accident scenario (cause) or mitigate the consequences should the scenario occur.	List non-hardware measures taken to prevent the occurrence of the accident scenario (cause) or mitigate the consequences should the scenario occur. Examples include procedures, training, process variable monitoring/limits, etc.	Estimate the frequency of encountering cause "XX" and subsequent failure of prevention and mitigation systems.
		YY. List other potential failure or error ...						
		ZZ. List other potential failure or error ...						

Table 2.4. Radiological Risk Guidelines

Frequency Category	Frequency Range (yr^{-1})	Effective Dose Equivalent, mSv (Rem)	
		Onsite	Offsite
Anticipated	> 1E-02 to ≤ 1E+00	5 (0.5)	1 (0.1)
Unlikely	> 1E-04 to ≤ 1E-02	50 (5)	5 (0.5)
Extremely Unlikely	> 1E-06 to ≤ 1E-04	100 (10)	40 (4)

Source: Bacon, R. F., 1996. *Tank Waste Remediation System Accident Analysis Risk Evaluation Guidelines*. Letter 9651709, to J. E. Kinzer, U. S. Department of Energy, Richland Operations Office (April 22, 1996). Westinghouse Hanford Co., Richland, Washington.

Table 2.5. Toxicological Risk Guidelines

Frequency Category	Frequency Range (yr^{-1})	Primary concentration Guidelines	
		Onsite	Offsite
Anticipated	> 1E-02 to ≤ 1E+00	≤ ERPG-1	≤ PEL-TWA
Unlikely	> 1E-04 to ≤ 1E-02	≤ ERPG-2	≤ ERPG-1
Extremely Unlikely	> 1E-06 to ≤ 1E-04	≤ ERPG-3	≤ ERPG-2

Source: Bacon, R. F., 1996. *Tank Waste Remediation System Accident Analysis Risk Evaluation Guidelines*. Letter 9651709, to J. E. Kinzer, U. S. Department of Energy, Richland Operations Office (April 22, 1996). Westinghouse Hanford Co., Richland, Washington.

ERPG = Emergency Response Planning Guideline
PEL = Permissible Exposure Limit
TWA = Time-weighted Average

2.4 PRELIMINARY SAFETY CLASS EVALUATION

A preliminary Safety Class Design (SCE) was performed to identify safety (safety class and safety significant) Systems, Structures, and Components (SSCs). The safety classifications were designated in accordance with the requirements and criteria of WHC-CM-4-46, *Safety Analysis Manual*. The safety classifications of individual components of the K Basin sludge offload process, including Sludge Transportation System and Sludge Receiving Station, are presented in Chapter 8.

3.0 SYSTEM DESCRIPTION

This chapter describes the Sludge Transportation System to be used to move the sludge from K Basins to the AW tank farm; the Sludge Receiving Station that connects to the transportation system to offload sludge into DST 241-AW-105; and the systems designed to safely store wastes in AW-105. General design requirements are summarized in Appendix A. For perspective, a map of the Hanford Site, showing the location of the 100 K and 200 East Areas, is shown in Figure 3.1.

3.1 SLUDGE TRANSPORTATION SYSTEM

The K Basin sludges will be shipped to the tank farm using a specially-designed transportation system for shipment to the AW tank farm. The Sludge Transportation System consists of a trailer-mounted ASME pressure vessel, designed to meet onsite shipping criteria for a Type B transportation system for highway-route controlled quantities of radioactive materials. This section provides the characteristics of the transportation system that are to be used in this safety assessment. Note that the transportation system is currently under development and some of the characteristics and operating parameters may change as the design evolves. This information was extracted from the draft packaging design criteria for the Sludge Transportation System (Tomaszewski 1996).

3.1.1 General

The Sludge Transportation System will be designed and delivered as an integral system. The functional requirements for the transportation as related to the offload system are:

- Interface with and fit within the Sludge Receiving Station adjacent to AW-105.
- Weigh no more than 100,000 lb with a fully loaded container and all support hardware.
- Provide for safe shutdown of equipment during sludge offload activities in the event of equipment failure (i.e., leakage, plugging).
- Provide capability to flush container, connectors, and transfer lines.
- Provide equipment to interface with TWRS provided utilities (i.e., electrical, flush water).
- Meet ALARA objectives.

3.1.2 Packaging and Container

The container will be an ASME pressure vessel meeting onsite performance criteria for a Type B packaging system for highway-route-controlled quantities of radioactive material. The container is planned to have a minimum capacity of $3m^3$, maximum capacity of $6m^3$, and fit within the sides of an 8 ft wide, 30 ft long, single-drop, flatbed trailer. Figure 3.2 provides a conceptual description of the Sludge Transportation System. Some key features of the container include the following:

- Materials used for fabrication will be compatible with the pH range and mixture of chemical constituents identified in Brisbin (1996).

- Features to localize and minimize the size of the sludge heel (such as would be provided by a sloped bottom).
- Features to accommodate leak testing per American National Standards Institute (ANSI) standard N14.5, sections 6.3.1 and 6.5.
- Features to monitor and obtain the sludge and liquid levels.
- Features to obtain sludge samples for laboratory analyses.
- Features to mitigate the effects of water sloshing (such as damping or administrative controls on travel speed).
- Features to sluice the residual sludge and heel from the container following offloading.
- Survive an engulfing fire as described in Tomaszewski (1996).

The maximum container fill rate is anticipated to be 6.3 L/sec (100 gpm), through a 5.1 cm (1.5 inch) fill line. The fill line connects to the container fill port using a dry disconnect coupler. Air displaced from the container during fill operations will be vented through at least two passive, High Efficiency Particulate Air (HEPA) filtered vents, which are capable of being sealed during transport. During loading, the container will be monitored to control sludge volume and fissile content using level detectors and non-destructive assay instrumentation features which will be interlocked with the Sludge Loadout System at K Basins.

After the sludge is loaded into the container, the container contents will be sampled and chemically adjusted to meet AW Tank Farm waste acceptance criteria.

At the time of removal from the basin, the sludge characteristics will be obtained and compared to the operational safety limits established in the Safety Analysis Report for Packaging (SARP) using Non-Destructive Assay (NDA) or actual laboratory analyses of samples. Safety limits in terms of maximum allowable heat load, maximum dose rate, criticality prevention, and gas generation will be established and documented in the transportation system's SARP, will not be exceeded.

The transportation system will include a pumping system with the capability to transfer sludge from the container to the tank. The container pumping system mates to a 1.5 inch transfer line via a dry disconnect coupler. Controls for the pumping system will be interlocked with the tank farm's Sludge Receiving Station leak detection sensors. Connections and equipment will also be provided for the TWRS supplied utilities (i.e., electrical, flush water).

Shielding for the container will be based on the highest specific activity sludge, with the sludge settled to the bottom of the container. Shielding may be integral with the container or be provided as an overpack.

Radiation levels emitted from the shipping container are targeted to be less than:

1) 100 mrem/hr at 2 cm from any external surface point of the package.
2) 10 mrem/hr at 2 meters from the package (exclusive use limit).
3) 2 mrem/hr in any normally occupied position of the tow vehicle.

These are somewhat lower than the radiation dose rate limits required for over-the-road transportation containers (see 49 CFR 173, Subpart I). These lower limits were specified for ALARA purposes, due to the need to control occupational exposure during K Basin sludge retrieval operations which will be peformed in areas which have relatively-high background radiation field.

Container ports and closures will be sealed from the atmosphere during transport with positive closure devices which are designed to not be able to be opened unintentionally. Seals and sealing surfaces are protected during equipment handling processes.

The container is currently planned to have at least two passive, HEPA-filtered vents. The filter system will be sealed from the atmosphere while the container is under transport.

The container will be designed to minimize the size of the sludge heel to minimize radiation exposures during handling and transport of the "empty" container. The container interior is to be designed to allow for removal of the majority of sludge heel, including particles as large as ¼ inch.

3.1.3 Transport Trailer

The design requirements for the trailer include the following:

1) be a National Highway Traffic Safety Administration (NHTSA) registered trailer.
2) be an open lowboy, single-drop, 30 ft overall length, and 8 ft wide.
3) have a minimum concentrated load capacity of 60,000 lbs.
4) have container attachment cross-members meeting the securement systems requirements of 49 CFR 393.102 (d).

The packaging will be attached to the trailer either with a tiedown and/or blocking and bracing system with sufficient strength to preclude yielding of material in the system, the container, the container lifting/tiedown attachments, the tiedown devices, the blocking and bracing devices, the trailer attachment points, and the trailer itself, when subjected to:

> "... a static force, positioned at the center of gravity of the container, having a vertical component of $2g$, a horizontal component along the direction of vehicle travel of $10g$, and a horizontal component perpendicular to the direction of vehicle travel of $5g$, with the g factor applied to the weight of a fully loaded container with attached support hardware."

The trailer landing gear will be provided with a two-speed, manual crank with sand pads capable of accommodating a fully loaded trailer.

3.1.4 Support Equipment

Support equipment includes equipment to pump the sludge, operate and monitor offloading operations, mix container contents, vent displaced air during loading and unloading operations, and flush the container and piping following unloading operations. Support equipment is anticipated to include:

- Level indicators.
- Console to monitor and control offloading operations.
- Equipment for removing container contents.
- System to mix container contents.
- Equipment necessary to interface with TWRS supplied electrical power, water, and Sludge Receiving Station.

3.2 SLUDGE RECEIVING STATION

This chapter is under development. The purpose of the Sludge Receiving Station, as defined in WHC (1996a) is to provide the necessary equipment and capabilities to transfer K Basin sludges from the Sludge Transportation System to DST AW-105. Key features of the Sludge Receiving Station (Figure 3.3) used in the safety analysis are described in this section.

The Sludge Receiving Station consists of three main elements: 1) spill retention basin; 2) male coupler for connecting to the sludge transportation system; and 3) transfer line from valve station to sludge distribution system connection as described below:

- The **spill retention basin** is located adjacent to AW-105 and functions primarily as a leak collection system in the event that a transfer connection or line ruptures or otherwise leaks. It was assumed that any leakage would be collected in a sump which would be collected and pumped back into the DST.
- The **male coupler** at the Sludge Receiving Station contains the necessary connections to mate to the Sludge Transportation System and provides the terminus for the permanent transfer line from the tank. A dry disconnect coupler is likely to be provided.
- The **transfer line** provides the flowpath for sludge to be placed in the tank. As shown in Figure 3.4, the transfer line will be aboveground and is double-contained (hose-in-pipe or pipe-in-pipe) with leak detection capabilities between the inner and outer line. The leak detectors are interlocked to the pump on the shipping container to automatically stop the pump upon detection of leakage. The line is planned to be installed aboveground with concrete half-shells over the above-grade portion to provide shielding.

Additional information related to the transfer operations are as follows:

- The HEPA filters on the Sludge Transportation System will be sealed for transport. This will allow the hydrogen gas to build up within the container during transport.

- A flush hose and water supply will be provided to flush the Sludge Receiving Station and the Sludge Transportation System.

- A temporary radiation zone will be established around the Sludge Receiving Station in tank farms. The temporary radiation zone will be removed after each transfer is complete.

- The air compressor shown on conceptual drawings of the trailer (Figure 3.2) is not a final detail. It was shown tentatively on the drawings and is intended to provide pump motive force (electric-driven pumps are also under consideration) and, if needed, to bubble air into the cask to assist in the pumping process.

- The main electrical power source for the transfer equipment will be tank farm power. The truck will also be provided with a small generator to use in case normal power is lost. The generator will likely be diesel powered.

- Operations are currently envisioned to include a period of time to allow the sludge to be mixed after the trailer has been positioned on the spill retention basin at tank farms. The operating scenario was envisioned to first start the mixer pump and then let the sludge mix while operators are performing the connection activities.

- No specifications are available for the connections to the Sludge Transportation System outlet valves. A quick-connect system is planned to minimize the time operators spend near the transportation system to establish connections. The coupler is envisioned to be a self-sealing, no-drip, quick-disconnect coupler that automatically closes when the connection is broken. The design of the connectors will accommodate the use of glovebags during the offload process.

- Automatic pump shutoff capabilities will be provided; auto-shutoff will occur if a leak is detected or if low-level is sensed in the container. Also, depending upon pump design, a pump overpressure shutoff may be provided.

- There are currently no plans to provide gravity-drain capabilities for the transportation system. Pumping will be the only way to remove the sludge from the container.

- Portable shielding, such as leaded blankets or lead bricks, will be provided for the flexible transfer hose to reduce dose rates. These shields will be placed over the flexible line before the transfer occurs. Operator stay time will also be limited in this area. Because the transfers will be performed from a control panel on the trailer, there will be no need for the operators to remain near the flexible line for any length of time, except during the connection process.

- A current goal for the transportation system includes a maximum allowable dose rate at the cask surface of 100 mrem/hr as opposed to 200 mrem/hr for transportation authorization purposes. The lower limit is being specified to minimize operator dose.

- The cover gas in the container was assumed to be air.

- Aboveground portions of the tank farm receiving station include only the Sludge Transportation System (including the flexible transfer line), and the tank farm end of the transfer pipe.

- An off-the-shelf spill retention basin will be provided in tank farms. The truck will drive onto the spill retention basin, the tractor will be uncoupled and moved away, and the trailer chocked. The spill retention basin is capable of supporting the loads envisioned for the offload process.

3.3 AW TANK FARM DESCRIPTION

This section provides a description of the tank farm with special focus on the double-shell tank 241-AW-105. The information contained in this chapter serves as the basis for the safety assessment for identifying and evaluating potential risks associated with the transfer of K Basin sludge into DST 241-AW-105.

The AW tank farm is located in the 200 East Area at the Hanford Site. Figure 3.1 provides the map of the Hanford Site. Figure 3.5 shows the tank farm configuration at the 200 East Area.

3.3.1 Structure of Double-shell Tanks

Tank 241-AW-105 is referred to as a double-shell tank (DST). A DST (see Figure 3.6) is comprised of four major structures; a primary tank, a secondary liner, a concrete shell, and a support pad. The primary safety function of a DST is to contain the radioactive liquid waste over the lifetime of the facility.

The primary tank is a free-standing, completely enclosed, steel structure that contains and confines the waste. The concrete shell supports the primary tank and isolates the primary tank and secondary liner from soil loadings, dead loads, live loads, seismic loads and loads caused by temperature gradients between the tank waste and the soil. The foundation of the concrete shell contains drain lines and sumps to collect leakage from the secondary liner. The secondary liner lines the concrete shell, extending along the bottom, side, and upper haunch of the concrete shell to the upper knuckle of the primary storage tank. The support pad is located between the bottom of the primary storage tank and the secondary liner and supports the primary tank, provides a means of detecting leaks from the primary tank, and provides a means for cooling the primary tank.

The design codes and standards followed during the construction of the DSTs are provided in Appendix 3A. The following sections discuss the confinement features of the double-shell tanks.

3.3.1.1 Primary Tank

The carbon steel primary tank measures 75 ft in diameter and is 46 ft 9 in. high at the dome center. The nominal storage capacity is 1.0 million gals at a liquid level of 30 ft 2 in. The maximum storage capacity is 1.16 million gals at a liquid level of 35 ft 2 in.

The bottom of the primary tank is fabricated of steel plate. A one inch thick steel plate 4 ft in diameter is located in the center of the primary tank. A one-half inch thick plate extends to a curved, or formed, piece of the steel plate called the "knuckle". This is the location where the tank bottom joins the tank wall. The knuckle plate is 7/8 in. thick.

The wall plates gradually thin from 7/8 in. at the knuckle to 3/4 in., to 5/8 in., to 1/2 in., and finally to 3/8 in., completing the remaining 20 ft of the tank wall. The wall meets the tank dome at the "haunch" junction at the top of the 20 ft section. The haunch and most of the dome are formed with 3/8 in. thick steel plate. The exact dome center is a 1/2 in. thick circular plate which is 12 ft in diameter.

To reduce high stress points at weld joints that are susceptible to corrosion and cracking, post-fabrication stress relief treatment was performed for the primary tank.

3.3.1.2 Secondary Liner

The secondary liner is built directly on top of the concrete foundation slab and extends up the concrete shell walls to near the upper "haunch" area. The liner is 80 ft diameter and roughly 20 ft high. The secondary liner is constructed of carbon steel plates varying in thickness from 3/8 in. to 1/2 in. The bottom of the secondary liner is fabricated from 3/8 in steel plate. The secondary liner knuckle is made of a 1/2 in. steel plate that extends about 2 ft from the floor and is welded to 3/8 in. wall plates.

Structural integrity of the annulus is required for satisfactory primary tank integrity and operation. The secondary liner provides physical support and a necessary heat sink to prevent primary tank integrity degradation. The completely enclosed annulus is the confinement barrier for potential primary tank leaks, thus preventing an uncontrolled release of waste to the environment. The annulus is normally ventilated and monitored by radiation detectors and leak detectors for evidence of primary tank leakage.

All primary tanks and secondary steel liners were full penetration, butt-welded. The welds were visually inspected, radiographed, and accepted per the requirements of ASME Section VIII, Division 2.

3.3.1.3 Concrete Shell

The exterior concrete shell is an 89 ft diameter, steel-reinforced concrete shell that rests on a structural concrete foundation. This shell is designed to support all soil loading, dead loads, live

loads (equipment, personnel) and seismic loads. The concrete shell completely encases the secondary liner and primary tank dome. The concrete walls are 18 in. thick and rest on a steel slide plate mounted on the foundation footing. The 15 in. thick concrete dome and the walls contain a lattice of reinforcement bars and embedded J-bolts that are threaded into nuts welded to the steel tank walls and dome.

The one-piece, 89 ft 4 in. diameter structural concrete foundation, evenly distributes all weight loads to the ground below. The circular center portion of the foundation is 6 ft in diameter and 2 ft thick. From the circular center portion, foundation thickness tapers to 12 in. and expands again to 33 in. at the outer edge.

The top of the concrete foundation contains drain slots for the removal of any liquid that might leak from the secondary tank (constituting a tertiary leak detection and collection system). Any liquid that reaches the foundation will drain through the slots to a leak detection well.

Design analysis of the concrete structures indicates that it will experience a nonlinear creep and cracking due to elevated temperature conditions induced by the contents of the primary tank. However, it reaches an equilibrium point with a margin of safety.

3.3.1.4 Concrete Pad

An 8 in. thick insulating concrete pad is located between the primary and secondary liner. This pad protects the external structural concrete foundation from excessive temperatures during stress relief treatment. During regular tank operation, the insulating concrete pad serves to establish a uniform tank bottom temperature, provides a means of heat removal, provides a means of leak detection, and helps to eliminate pockets of water condensation. To provide this function, the insulating concrete pad is cast with air distribution and drain slots in a grid pattern.

To provide cooling, air is drawn through the drain slots via the annulus ventilation system (see Section 2.7.1.2). The drain slots allow any leakage from the primary tank to drain into the annular space that contains conductivity leak detection instrumentation installed in annulus risers.

3.3.1.5 Risers

Each tank is equipped with riser pipes that penetrate the concrete dome and the top of the primary or secondary tank. The risers provide access to the primary tank and to the annulus space for waste transfer operations, equipment installation/use, and for monitoring purposes. Some risers are located in covered pits (e.g., central pump pit, annulus pump pit, and drain pit) and at specific predetermined locations. These risers can be used to install instrumentation that measures or monitors tank temperature and pressure, liquid and sludge levels, weight factor (WF), specific gravity (SpG); and provides observation ports and inspection locations. A typical dome penetration arrangement is shown in Figure 3.7, with a description of the number and sizes of penetrations. The pits provide access to process piping and tank risers and are the installation points for jumpers, pumps, and other equipment used to establish waste transfer routings. Additional detailson risers can be found in WHC-SD-RE-TI-093, *Double-Shell Underground Waste Storage Tank-Riser Survey* (WHC 1991).

Primary tank dome risers are provided for instrument access to measure and/or monitor or perform the following functions:

- Temperature/pressure
- Specific Gravity
- Liquid/sludge levels
- Liquid/sludge sampling
- In-tank photography
- Visual inspections
- Ventilation and pumping.

Annulus risers are provided for the following functions:

- Liquid leak detection instruments
- Annulus pump pit risers
- Access or inspection
- Periscopes
- Still and television cameras
- Ventilation air supply and exhaust ducts
- Temperature monitoring.

3.3.1.6 Pits

Pump pits are constructed of reinforced-concrete walls and floors located below grade and are provided with removable reinforced-concrete cover blocks which are approximately at grade elevation. Personnel are protected from radiation by the 20 in. thick cover blocks. The configuration of the piping in the pit may be painted on the cover blocks to show the operator the routing of the liquid waste and the valve positions.

Each tank is equipped with at least two concrete pits to be used in tank contents removal. A central pump pit is approximately centered on the tank. An annulus pump pit is positioned over the annulus. Feed pump pits are located off-center on specific tanks. A leak detection well and pump pit are located off the perimeter of the tank. Pump access to the tank, annulus, or pit is provided through a riser that terminates inside the pit.

Pumps are used to remove liquid waste from primary tanks, annuli, and leak detection pits. These pumps are portable; however, pumps that become contaminated during a transfer operation in a particular pit may remain permanently installed in that pit.

All AW tanks have a central pump pit, an annulus pump pit and a leak detection pit. Tank AW-102 has two additional pits, i.e., a feed pit and a drain pit, which are not described here.

3.3.1.6.1 Central Pump Pit

Central pump pits are approximately centered on the tanks and have three purposes:

(1) supernatant filling/removal, (2) slurry distribution, and (3) mixer pump installation. A typical central pump/distributor pit is illustrated in Figure 3.8.

Supernatant filling is accomplished through piping or jumpers connected to a drop-leg riser. For supernatant removal, central pump pits are designed to hold a deep-well turbine pump and piping or jumpers. Tanks without pumps have dummy pump heads installed on the pump flange. The dummy pump heads support the supernate pump-out (and fill) jumper. Central pump pits for receiver tanks which are used to store slurry from the 242-A Evaporator, which includes AW-105, are equipped with slurry distributors.

A slurry distributor disperses the slurry evenly within the tank during filling operations. The pump pit cover block is marked with a distributor-indexing diagram, so the distributor may be set at any given position from an established "0°" reference point. The "0°" position for the distributor points directly at the level instrument assembly. Two "Do Not Slurry" zones appear on each slurry distributor indexing diagram. One zone is at the indicated "0°" to protect the level instrument; the other zone prevents slurry from being sprayed directly under the tank ventilation outlet. A slurry distributor is shown in Figure 3.9.

3.3.1.6.2 Annulus Pump Pit

Annulus pump pits are located over an annulus riser to provide a means for pumping out any liquids that have accumulated in the annular space in the event of a primary tank leak.

Annulus pump pits typically measure approximately 7 ft by 7 ft by 11 ft 7 in. deep with 12 in. thick walls. Annulus pump pits are covered with a 20 in. concrete cover block. The cover has a small leak detector assembly access hole with a shielding plug that may be used for observation purposes. The cover block must be removed to obtain access to the leak detector because the plug/detector is threaded into the annulus pump pit drain. Figure 3.10 shows a typical annulus pump pit. In most cases, deep-well vertical turbine pumps will be installed on an as-needed basis. The pump is lowered into position after a blind flange is removed. A rigid jumper assembly connects the pump's outlet to a 2 in. Process Waste (PW) line that is enclosed in a 4 in. encasement that slopes to drain the encasement pipe toward the annulus pump pit. The 2 in. PW line terminates at the tank's central pump pit. The waste may then be pumped to a suitable tank through the existing transfer piping.

3.3.1.6.3 Leak Detection Pit

Leak detection pits have been installed in all DST farms. Before 1986, each tank had its own leak detection pit located adjacent to the tank annulus.

Leak detection pits collect and are monitored to detect liquid from the drainage grid at the top of the concrete foundation upon which the secondary liner bottom rests. This pit is fabricated as two parts: a leak detection well/pump pit and a 6 in. diameter radiation detection pit. Figure 3.11 shows a typical leak detection pit.

Leak detection pump pits are 7 ft square by 10 ft 7 in. deep and have 12 in. concrete floors and walls. One 20 in. thick concrete cover block fits over the pump pit. Access to the radiation drywell is adjacent to the pump pit and under a sheet metal cover. The pit is located about 12 ft from the concrete tank wall. The leak detection well sump floor is typically 62 ft 10 in. below grade. Below the top of the cover block, at approximately 58 ft, a 6 in. encased drainpipe connects the leak detection well sump to the tank foundation for liquid collection. Depending upon the farm, the liquid can be pumped back into the primary tank or through process piping to a designated receiver tank.

The leak detection pit may be ventilated through a 2 in. diameter vent line, connected to the tank annulus ventilation system by opening an in-line ball valve with a T-handle. The T-handle extends about 3 ft above grade, near the leak detection pump pit. The ventilation line connects with the annulus vent system. Unless leak detection pits are contaminated, ventilation is unnecessary.

The radiation well, 6 in. in diameter, terminates adjacent to (but outside the detection part of) the leak detection pit sump. The outside dimensions of the radiation dry well pit are 3 ft 10 in. long, 2 ft 4 in. wide, and 2 ft 3 in. deep. The radiation well access pit drains into the leak detection pump pit which drains to the pit sump. Access to the pit is gained by removing a steel cover plate with retractable lifting bails.

3.3.2 241-AW Tank Farm Description

This section describes the AW tank farm, tank farm equipment and the supporting facilities, such as the ventilation systems, instrumentation and controls, and other facilities.

The following are the nominal dimensions of all the tanks in the AW Farm:

Diameter:	75 ft
Height at Crown:	47 ft
Nominal Height:	35 ft.
Nominal Capacity:	1,150,000 gal.
Maximum Height:	35 ft.
Maximum Capacity:	1,160,000 gal.

The codes and standards used to design and construct the DSTs are provided in Appendix 3A.

The 241-AW Tank Farm has six DSTs that were constructed in 1980, each capable of holding a maximum of 1,160,000 gals. The 241-AW Tank Farm stores low-heat radioactive liquid waste generated by PUREX. The tanks are specifically designed for storage of 242-A feed and have rounded knuckles.

Tank 241-AW-102 is the feed tank for the 242-A Evaporator and is used for all waste concentration operations. Any waste designated for concentration is pumped to feed tank 241-AW-102 for transfer to the 242-A Evaporator.

Cladding removal waste is initially stored in tanks 241-AW-103 and 241-AW-105. Solvent extraction wash waste and miscellaneous sump waste are stored in tank 241-AW-104. Tank 241-AW-106 is the slurry receiver tank from the 242-A Evaporator. Table 3.1 provides current waste storage information in the 241-AW-105 tank. Table 3.2 provides a list of facilities within the AW Tank Farm.

3.3.2.1 AW Tank Ventilation Systems

All DST ventilation systems are comprised of both a primary or K1 ventilation system and an annulus or K2 ventilation system.

The function of the primary ventilation system is to remove potential radioactive decay heat from the primary tank by removing vapors from the tank head space. The combined annulus and primary tank ventilation systems can remove up to 100,000 Btu/h. In addition, the primary ventilation system serves to confine the stored materials by maintaining negative pressure conditions within the tank.

The annulus ventilation system removes the heat generated by radioactive decay and by operation of the mix pumps.

Due to active ventilation, all ventilation exhaust systems are designed, constructed, and maintained to do the following:

- Provide confinement of condensed vapors.
- Remove radioactive particulate materials from gaseous effluent so that the effluent meets the concentration guidelines specified in DOE-RL Order 5480.1A.

Figure 3.12 illustrates the typical ventilation systems for a double-shell tank.

3.3.2.1.1 Primary Tank Exhaust System

The primary tank ventilation system shown in Figure 3.13 filters and removes moisture from tank exhaust vapor before the vapor is discharged to the atmosphere. The primary tank ventilation system maintains a negative pressure on the tanks in order to offset maximum fill-rate and air in-leakage. This ensures confinement of radioactive airborne materials. The primary tank ventilation system can handle offgas with as much as 100% humidity.

Table 3.1 Current Status of AW Tank Farm Storage Tanks

Tank/Facility	Waste Material Classification (1)	Integrity Category	Watch List Designation	Supernate Volume		Drainable Interstitial Liquid Volume		Sludge Volume		Saltcake Volume		Interim Stabilized	Intrusion Prevention Complete
				Kl	Kgal	Kl	Kgal	Kl	Kgal	Kl	Kgal		
241-AW-101	DSSF	Sound	Hydrogen	3948	1043	8	2	318	84	0	0	No	No
214-AW-102	DN	Sound	Not listed	348	92	0	0	4	1	0	0	No	No
241-AW-103	DN/PD	Sound	Not listed	572	151	140	37	1374	363	0	0	No	No
241-AW-104	DN	Sound	Not listed	3160	835	185	49	678	179	420	111	No	No
241-AW-105	DN/PD	Sound	Not listed	1230	325	110	29	1124	297	0	0	No	No
241-AW-106	DN	Sound	Not listed	916	242	159	42	799	211	322	85	No	No

(1) Waste material classifications are abbreviated as follows: DSSF = Double-shell Slurry Feed; DN = Diluste Non-complexed Waste; DN/PD = PUREX Neutralized Cladding Removal Waste, transuranic (TRU) waste.

Table 3.2 Double-Shell Tank Farm 241-AW Facilities List

Equipment Description	Equipment Identifier
Tanks	214-AW-101, -102, -103, -104, -105, -106
Primary tank ventilation system	241-AW Exhaust Station
Annulus ventilation system	241-AW Exhaust Station
Air intake assemblies	DPI-1 through -6 (one at each tank)
Airlift circulator	241-AW-102
Valve pits	241-AW-A, 241-AW-B
Central pump pits	214-AW-01A through -06A
Annulus pump pits	214-AW-01B through -06B
Leak detection pump pits	214-AW-01C through -06C
Leak detection transmitter enclosures	214-AW-01C through -06C
Drain pits	241-AW-02D
Cleanout boxes	COB-AW-01 through -12, and A-30
Flush pit	241-AW
Service pit	241-AW
Primary seal pot	241-AW K1
Annulus seal pot	241-AW K2
Feed pump pits	241-AW-02E
Ventilation instrument pits	AW VIP -1, -2, and -3
Instrument building	241-AW-271
Compressor building	241-AW-701
Service building	241-AW-273
Operations support facility	241-AW-272
Electrical substation	241-AW
Motor control center	MCC-241-AW
Pump control centers	N/A
HVAC gage racks	N/A
HVAC radiation monitor cabinets	N/A
Heat trace control panel	N/A
Specific gravity enclosure	241-AW-102-1
Drywell	Dry well next to each leak detector pit
Test risers	N/A
Area RAM monitor/light towers	N/A

Air is introduced into the tank head space through air purge instruments and by outside air drawn into the tank through pit cover blocks and risers because of a vacuum created by the exhaust blower. Air is then drawn out of the tank through a 12-in. diameter duct and into a below grade exhaust header. Primary tank exhaust ducts have air volume control butterfly valves located in vent pits. After leaving the vent pits, exhaust ducts combine into one 16-in. diameter duct. The exhaust header terminates at the primary K1 exhauster unit located on the primary ventilation pad.

At the primary ventilation pad, the air passes initially through a demister consisting of a wire mesh pad that separates heavy moisture particles from the air stream, and then through one of two motor-operated valves. Valve positions are automatically controlled by differential pressure switches which measure differential pressure (DP) across the blowers. The air then passes through a heater, which removes most of the remaining moisture.

The dry heated air is prefiltered for particulates by a National Bureau of Standards filter. Next there are two HEPA filters mounted in series to remove particulates as small as 0.3 microns with at least 99.95% efficiency. Smaller particles can be trapped by the filter but it is not rated for any particle smaller than 0.3 microns. Two differential pressure (DP) indicators across the HEPA filters monitor operating conditions. Low DP indicates low air flow or a failed filter. High DP indicates blockage due to accumulated solids or possible ice formation on the filters.

Passing through the filters, the air is then drawn through a K1 Blower and exhausted out the K1 stack. A CAM monitors effluent radioactivity levels and a record sampler collects representative samples before discharge to the atmosphere.

Under normal operating conditions, only one of the dual primary vent systems operates at a time. The other unit provides back-up support in case of equipment failure, HEPA filter changes, or will automatically start in the event of an exhaust fan failure.

Under normal circumstances, one of the K1 demisters is valved in and the opposite demister is valved out.

3.3.2.1.2 Annulus Ventilation System

The annulus ventilation system for AW tank farm is illustrated in Figure 3.14. The air intake to the annulus of each tank is designed for 800 scfm and is routed through a 35% efficiency prefilter and a "non-compliant" self-contained HEPA filter before being supplied to the annulus air distribution channels of each tank. The airflow exhausted from the annulus of each tank is combined and then routed through both exhaust trains, with each train consisting of a demister, an electric heater, two HEPA filter housings, and a fan, before being exhausted from a stack to the atmosphere. One notable difference is that each AW HEPA filter housing consists of three HEPA filters mounted one on top of the other. The total airflow rate through the annulus ventilation systems for AW tank farm are designed to handle approximately 5,250 scfm.

Instrumentation is above grade and is located at the exhaust unit and/or in the instrument building. All primary ventilation, instrumentation, duct work drains, and seal pots are protected from

freezing weather. Shielding is provided for the demister, preheater, and filter assembly of each primary tank system.

3.3.2.2 Instrumentation and Surveillance Systems

The instrumentation and monitoring systems used in AW tank farm includes the following:

- Computerized Surveillance Systems.
- Liquid Level Measurement System.
- Leak Detection and Monitoring Systems.
- Waste Sampling Equipment and Methods.
- Structural Monitoring (Single-Shell Tank Farm).
- Temperature Monitoring.
- Standard Hydrogen Monitoring.
- In-Tank Surveillance Cameras.
- Criticality detection systems.

Within TWRS there are two primary computerized surveillance systems. These systems are Computer-Automated Surveillance System (CASS) and Tank Monitoring and Control System (TMACS). The following subsection discuss each of these systems.

3.3.2.2.1 Computer-Automated Surveillance System (CASS)

CASS is designed to provide a central, computerized surveillance of the Hanford Site underground waste storage tanks and their associated facilities. The central CASS Facility is located in the 2750-E Building in the 200 East Area. The CASS Facility is manned on a 24-hour basis by Waste Tank Operations.

The CASS is provided for most of the tank farm monitoring systems. Field detection and monitoring instrumentation systems are essentially the same for all individual tanks within the tank farms. Detection instruments send data to monitors in the tank farm instrument enclosures and/or monitors in the appropriate instrument buildings. All signals are converted to electrical signals before transmission to CASS substations. Most monitored data is fed automatically to the CASS, however, some data is measured and recorded manually and maintained at each farm without input to the CASS.

Parameters continuously monitored by the CASS include the following:

- Substation failures
- Leak detection pit alarms (high-radiation, high-liquid level)
- Tank pressure alarms (high-pressure and vacuum)
- Leak detectors on tank annulus floor
- Exhaust fan failure alarms
- Radiation detection units (annular exhaust continuous air monitors (CAMs), HVAC exhaust stack CAMs, raw water lines in service pits, instrument building panel alarms)

- Process line, encasement, process pit leak detectors, COB leak detectors

The following parameters are scanned hourly by the CASS:

- Actual liquid level measurement
- Deviation from liquid level baseline criteria
- Failure of liquid level monitoring equipment

Signals are monitored and displayed on panel boards within the appropriate instrument building. Each tank has an associated local panel board, transmitter enclosure, and assigned portion of the pressure switch rack. Some signals are transmitted to the 242-A Evaporator[1] control room (for the 200 East Area), the 242-S control room (for the 200 West Area) as well as to the DST instrument buildings. Instrument panel boards display and/or record the monitored conditions of the various parts of the tank farms. Panel board information includes pressure and high-liquid level in each primary tank, leak detector and high airborne radiation probes in the annulus, high-liquid level and high radiation in the leak detection pit, and alarms relating to the operation of the ventilation system.

Separate CASS program files are kept for data categories (such as liquid levels, and thermocouples) and are held in the program's 32-day historical file. Transfer to the permanent retention file occurs daily. The CASS reports contain information that is received automatically or manually input through a computer terminal. A few readings (selected liquid level, weight factor, etc.) are not CASS files. These readings are measured manually each shift, then manually recorded and retained by Tank Farm and Evaporator Process Control personnel. Reports are generated on predetermined report forms. Each tank farm can select and customize the data on the reports.

3.3.2.2.2 Tank Monitoring and Control System (TMACS)

The TMACS consists of the Liquid Level Measurement System, the Leak Detection and Monitoring Systems, the Waste Sampling Equipment, the Temperature Monitoring, and the Standard Hydrogen Monitoring. These systems are discussed in the following sections.

Liquid Level Measurement System

Liquid level monitoring is a primary tool for maintaining strict accountability of radioactive and chemical waste solutions. Surveillance of an isolated tank gives the first warning of any liquid which may be leaking from the tank. It would also identify the unlikely possibility that liquid is intruding into the tank. Liquid levels in all waste storage tanks are monitored and recorded.

---

1 For additional information on the 242-A Evaporator, refer to the 242-A SAR (WHC 1994).

Three devices are used to monitor and control the liquid level in the primary tanks. These devices are as follows:

- A level-indicating transmitter (LIT) assembly provides continual automatic monitoring. The LIT installed in AW-105 is a Food Instrument Corporation (FIC) liquid level sensors.
- For some tanks, level indicator assembly or manual tape provides a manual backup for the LIT.
- A high-level detector provides the alarm input for a high-liquid level.

FIC Gauges - The FIC gauges are mounted on selected risers and rest at the surface level and then raise and lower, contacting the liquid surface. The reading is accomplished manually at AW-105. The gauges are mounted on selected risers. Operators manually raise and lower (bob) the plummet position at the air-liquid interface. When this plummet contacts liquid, an electrical circuit to ground is completed, thus determining the liquid level.

Although many underground storage tank liquid levels in the East and West Area tank farms are determined by automatic FICs (CASS or TMACS read), there are times when the automatic FIC becomes inoperative or, in the case of AW-105, only a manual FIC is provided. In these cases, the FIC must be manually read and the data entered into CASS.

Manual Tapes — There are two main types of manual tapes. The flake box type, described below, is a more recent design. The older type is generally much taller and has an exposed tape reel. Despite their differences, both operate in essentially the same manner. The reel is permanently attached to the tank riser, and the measuring tape is attached to the reel. The tape is inserted through the hole in the riser flange. Readings are obtained by attaching a portable DC meter to the terminals provided at the riser. The zero position on the manual tape represents the bottom of the tank or sump.

Flake box housings are located on a primary tank riser (on most DSTs and DCRTs) and on some annulus risers for leak detection. A flake box consists of a plexiglass housing containing a reel which is wound with a calibrated stainless steel tape. The tape extends down through the tank riser, and has a probe attached to the end. Flake boxes serve different purposes in different locations. Installed on a primary tank, they provide a means of determining waste liquid level within the tank. On a tank annulus, they can be used as a means of detecting leakage from the primary tank into the annulus.

The elevation of the probe is adjustable by turning a hand crank on the side of the housing to wind or unwind the steel tape. A portable direct current ammeter is connected to the tape and ground (riser flange) to determine when the electrical circuit to ground is completed. The plummet is lowered until the electrical circuit is completed, and the liquid level at the point of contact is read manually from the tape housing.

On the tanks that do not have a level instrument system, liquid level readings can be obtained with a manual tape or calibrated, insulated wire (zip cord). Insulated wires have electrodes attached and are premeasured and marked to allow for anticipated variances. In each case, readings are

obtained by attaching a portable DC meter to the terminals provided at the riser and lowering the electrodes until contact with the liquid surface is indicated by initial positive deflection of the DC meter, as described above.

High-Level Detectors — The high-level detector assembly consists of an electrode suspended from the riser. High-liquid level is detected when liquid contacts the electrodes and completes the electrical circuit across the electrodes. Readings in excess of high-level limits in tanks will engage the area pump interlock (shutdown) system, and provide audible and visual alarms.

Sludge Level Monitoring

A solid or sludge layer is commonly formed in the bottom of waste storage tanks as the contents concentrate and solids precipitate. It is necessary to monitor this sludge depth. Changes in the sludge level would indicate a change in tank solution makeup, and in some cases could clarify unexplained changes in liquid levels.

Sludge levels are measured manually by attaching a weighted steel measuring tape, and lowering the weight (also known as a "doughnut") until sludge is contacted. The tape is read at the top of the riser flange.

There are four methods of taking sludge-level readings. In each method, a steel doughnut or pancake is attached to the bottom of a calibrated tape or wire and lowered into the tank until it rests upon the sludge. A reading is then obtained from a reference point. Whenever a sludge level is taken, it is accompanied by an LIT gage or manual tape reading when available.

The three types of sludge-level equipment are listed here:

1. A Flake-type, plexiglass-enclosed, reel-mounted tape. The tape is slowly lowered until it bows upon contact with the sludge. A reference line on the face of the unit is used to determine the reading. This is known as a "slack-tape reading."

2. Using an older-type reel-mounted tape atop a tank riser, the tape is lowered until the doughnut rests upon the sludge. The tape will bow in the same manner as in the Flake type.

3. The horizontal mounted tape is used in the same way as the flake-type unit. The tape will begin to arch up from the horizontal surface upon contact with solids in the tank.

Double-Shell Tank Farm Liquid Level Monitoring

Several methods are used to measure a tank liquid level. In all cases, the measurement represents the depth of liquid from the bottom of the tank. This figure is multiplied by a conversion factor to calculate the volume (in gallons). In all 75-ft diameter tanks, 1 in. of liquid represents 2,750 gal.

Leak Detection and Monitoring Systems

In addition to the liquid-level monitors used for leak detection discussed above, dry well laterals monitor liquid intrusion to the soils surrounding and supporting the underground tanks as a second basic method of leak detection.

For a DST, each annulus has three conductivity probes spaced around the tank center at 120° intervals. For the concrete shell portion of a DST, the leak detection system is known as a "leak detection pit weight factor" system which monitors liquid level in leak detection pit sumps. A small amount of water is always kept in the leak detection pit sump so that the operability of the dip tubes may be constantly verified. Detection of a higher than normal liquid level must be investigated as a possible leak. Two annunciators are provided to alarm the activation of each leak detection unit; one at the instrument building, the other at the 242-A evaporator/crystallizer control room.

Leak Detection Pit Instrumentation

Three devices are associated with the leak detection pit instruments: a liquid level detector, a thermocouple, and a radiation detector.

- **Liquid Level Measurement System** - Each leak detection pit has a specific gravity (SpG) measurement unit. The SpG enclosures contain monitoring instrumentation that transmit the SpG information provided by the measurement units. The monitoring equipment also converts the pneumatic SpG signal to an electrical signal, then forwards the signal to the instrument building.

  Leak detection pits have three SpG dip tubes. One dip tube is located 6 in. above the pit floor, and one is located 16 in. above the floor. Both are below a maintained water level. Another dip tube is located near the top of the well, above the water level. The DP between the two pipes below the water is used to determine the SpG; the DP between the upper dip tube and the lower dip tube is used to determine the WF.

- **Temperature Measurement System** — Temperature elements that are installed at the bottom of each of the leak detection pits are used in the event of a leak from the annulus tank, which drains to the leak detection pit. A dual thermocouple assembly mounted below the water level in each leak detection well. These temperatures may be read at the TDS in the respective instrument buildings or on the CASS.

- **Radiation Measurement System** — The radiation detector is located in a dry well adjacent to the leak detection well. Detection of high radiation level or detector failure annunciates alarms.

Further, transmitter enclosures are provided for leak detection pits in the DST farms. A typical enclosure contains the following pneumatic transmitters:

- Leak detection pit SpG transmitter
- WF transmitter providing a signal to the Leak Detection Pit WF gage
- WF transmitter, providing a signal to the Leak Detection Pit WF alarm switch
- Transmits primary tank pressure to high/low pressure alarm, annunciators, and narrow range (-4 in. to +1 in. WG) pressure recorder
- Transmits primary tank pressure signal to the wide range (-10 in. to +80 in. WG) pressure recorder.

Transmitters for pressure, WF, and SpG convert hydrostatic pressure differences (across dip tubes) into pneumatic signals. The signals relay to the instrument building, transmit to the pressure switch rack, and activate the respective WF alarm switches. These switches convert the signals from pneumatic to electrical, then energize annunciators on instrument building panelboards.

Pit/Box and Transfer System Leak Detection System

Part of this system addresses the leak detection equipment associated with the pump pits, sluice pits, valve pits, COBs, diversion boxes, transfer boxes, and some encased transfer lines. This part of the system includes dual probe electrodes, induction-type relays, fail-safe relays, transmitters, and reset switches. The other part of this system is evident in some transfer lines, which have a 2-in. test riser installed to provide radiation monitoring and leak detection capability.

Leak detection conductivity probes are located in the following pits:

- Central pump pits
- Annuli pits
- Leak detection pits
- Valve pits
- Flush pit
- Service pit
- COBs

Control stations, each near the serviced tank, hold single-mounted detection monitors for the central pump pit, annulus pump pit, and leak detection pit. Each tank's control station is identical.

3.3.2.2.3 Waste Sampling Equipment and Methods

Sampling is carried out based on the type of waste in each individual tank. The types of sampling efforts that support various TWRS activities include push-mode and rotary-mode core sampling, grab sampling, auger sampling, and various types of vapor sampling.

Core Sampling

Core sampling is the task of remotely obtaining samples of solid or semi-solid material stored in the tank farm waste storage tanks. Essentially, core sampling consists of boring a hole into the solid/sludge mixture in the tank with a hollow tubular drill string. A portion of the material inside

the drill is then captured with a sampling assembly inserted inside the string. The sample assembly is then retrieved to the surface.

Push mode and rotary mode are two core sampling methods used to obtain solid and/or supernatant liquid samples of the high-level waste materials remaining in the underground waste tanks. The samples are obtained from the tanks using specially designed core-sampling trucks and sampling devices. A cylindrical cross-section of the tank contents below the riser used for sampling is obtained by pushing or rotating a 2.5 cm x 48 cm (1 in. x 19 in.) stainless steel sampler bit into the waste. Push-mode sampling is performed on tanks containing liquids or soft sludge. Rotary-mode sampling is primarily used to sample sludge or hard salt cake, although it may be used to sample the other waste types. During a sampling event, the stainless steel sampler is lowered into the waste by a hydraulically powered drill string. Drill ram hydrostatic pressure is continuously monitored during the sampling operation to measure waste resistance. Core samples are repeatedly taken until the bottom of the tank is reached.

The sampling rig consists of a truck-mounted rotary platform. The shielded receiver is mounted at one end of the rotary platform with the drill unit mounted at the other end. Also mounted on the sampling rig is an electrically operated winch. The cylindrically shaped shielded receiver houses the full sampler once it has been withdrawn from the tank. The drill unit drives the drill string and allows the drill to bore through the waste in the tank. The winch unit is used to raise and lower the drill string and additional equipment which connects the riser of the tank being sampled with the drill rig. The system is designed to maintain confinement of the waste sample through the entire operation.

Auger Sampling

Auger samples are used to screen the surface of organic, ferrocyanide, and gas-generating watch list tanks, and may also substitute for core samples in tanks containing less than 20 cm to 30 cm of waste. Auger samples are taken using a stainless steel, hand-turned auger bit contained in a sleeve in a method similar to wood boring or ice augering. This sampling method cannot be used to sample very fluid wastes since the sample cannot be properly captured in the sampler.

Supernate and Soft Slurry Grab Samples

A special sampling bottle that is contained in a cage can be used to obtain liquid or soft slurry samples of the waste. The bottle is stoppered and lowered to the desired level. The bottle is then opened so that it fills with liquid and retrieved from the tank and is then restoppered. This "bottle-on-a-string" sampling procedure conforms to ASTM (1973).

Vapor or Gas Sampling

Vapor space or gas samples are necessary to determine the formation of hazardous, explosive, or flammable concentrations of gases such as hydrogen (H_2) or ammonia (NH_3).

Vapor space samples are obtained using a gas-sample probe lowered into the vapor space above the tank contents. A mechanical pump draws an air sample into the probe. There are several different measuring devices, procedures, and instruments for vapor sampling.

Three processes are used for obtaining vapor samples. A sample may be passed through a device that traps or concentrates certain vapors and gases, a sample may be collected in an appropriate container, or the vapor may be analyzed in situ. Further discussion of existing methods is presented in the *Tank Waste Remediation System Tank Waste Analysis Plan* (Bell, 1994).

3.3.2.2.4 Temperature Monitoring

Temperature monitoring in the waste tanks, is required to maintain tank operating conditions. The temperature data, collected and analyzed, provides information about the waste temperature within a tank and identifies an accumulation of solids, or "hot spots." It records the reaction of a transfer to a DST receiver tank of thermally hot liquid waste on the existing solution, and the effect of temperatures on the tank and its foundation.

The temperature of each DST and its contents are monitored using thermocouple elements and digital temperature equipment located in the appropriate instrument building.

Thermocouple elements are installed during construction in each tank in the following locations:

- Insulating concrete (all dual thermocouple elements)
- Primary tank lower walls
- Concrete foundation
- Concrete walls and haunch
- Concrete dome

The thermocouple system provides access to thermocouple elements in the liquid in the leak detection pit and to the primary tank contents at 18 depths.

Temperature Measurement System

Thermocouples extend down through the tank risers into the tank contents. Temperature data from these thermocouples can be used to chart a temperature progression from the bottom to the top of the tank over time (a "Profile"). In newer tank farms equipped with stationary temperature display systems, there are no provisions for taking temperature readings at the tank risers. The thermocouples send their data directly to the instrument buildings.

A thermocouple probe with thermocouple elements is suspended in each primary DST. The low point of the probe is approximately 6 in. above the bottom of the tank with the first thermocouple element 4 in. above the low point of the probe. The lowest thermocouple element is approximately 10 in. above the floor of the tank.

Thermocouples also are installed a few inches above the bottom of the tanks at different locations from the center. These thermocouples are specially designed sludge thermocouples to measure temperature.

Dome Temperatures — These thermocouples monitor temperatures in the tank dome itself. Because of their locations, temperatures indicated are those of the air (or vapor) space above tank liquids.

Tank Knuckle Temperatures — Only one or two thermocouples are devoted to the tank knuckles.

Sludge Temperatures — Sludge thermocouples are installed to detect the buildup of heat-generating solids. They are placed near the bottom of the tank at various locations.

Sensor Locations

The locations of the thermocouples in different components of the DST are discussed in the following:

- **Insulating Concrete** — Thermocouples are installed in the annulus air space to monitor the structural integrity of the tank and concrete shell. Thermocouples are imbedded in the concrete layer directly under the primary tank and the foundation. They are used to ensure that an even temperature is maintained throughout the tank. The thermocouples are located close to the underside of the primary liner and are equally spaced in circles. Additional thermocouples are in contact with the outer surface of the primary shell.

  Twenty-four thermocouples are in the insulating concrete pad. Thermocouples form three concentric rings. The thermocouple spacing varies slightly to avoid interference with the insulating concrete drain slots. Thermocouple elements attached to the primary tank wall (just above the lower knuckle) in the annulus monitor the temperature above the tank bottom.

- **Foundation** — The foundation thermocouples lay between the bottom of the concrete shell and the earth below. These thermocouples, arranged in pairs, are used to measure temperature gradients through the concrete base.

  Maximum heat transfer between the temperature element and the conduit is achieved by loosely packing aluminum foil into the conduit cap. Foil is epoxied into place before the conduit end is capped.

- **Concrete Shell** — Thermocouple probe units measure temperatures near the inner and outer surfaces of the shell. The thermocouple elements in the concrete shell are fabricated in pairs. One thermocouple element is close to the inner surface of the shell (on the annulus wall or annulus/primary tank dome) and the other element is close to the soil on the outer surface of the shell. There are 24 thermocouple probe units embedded in the concrete shell wall and another 24 in the haunch and dome.

Portable Potentiometer — The portable potentiometer is used to provide "profile temperature" data, which is manually taken at the tank riser, or from a panelboard located in the tank farm.

The "profile temperature thermowells" from which the readings are taken have been placed inside the tank and bolted onto an existing riser. On top of the riser is a housing box, which consists of a plug receptacle and an indicator dial (also called a "Christmas Tree"). To obtain a temperature reading, the portable potentiometer must be plugged into the receptacle.

Heat Trace Sensing System — Three thermocouple probes are attached to the underside of the process piping. The conduit and probes are held in place with stainless steel straps.

Thermocouple Terminal Boxes — Six terminal boxes equally spaced around the perimeter of the tank are junction boxes for the thermocouple electrical leads. A seventh terminal box, near riser 4, transmits primary tank thermocouple temperature measurements.

Tank Temperature Retrieval — For selected tank farms the temperature thermocouples have been connected to selector switches located on panelboards in the farm instrument building. The selector switches are labeled to identify the tank and thermocouple (TC) numbers. To obtain a temperature reading, the appropriate selector switch is connected to the readout unit with the plug-in cord provided.

3.3.2.2.5 Standard Hydrogen Monitoring

The standard hydrogen monitoring system (SHMS) was developed to be operated in a class 1, division 1, group B (hydrogen) atmosphere. Where necessary system components are designed to meet the National Fire Protection Association national electric code requirements for operating in a hydrogen environment. The standard hydrogen monitoring system has been designed to be installed in four different configurations: (1) on the exhaust header, (2) on a gas probe assembly, (3) on a multifunction instrument tree assembly, or (4) on a modified riser flange. After the system has been leak tested and calibrated, the valving will be opened to allow sampling of the tank vapor space.

The standard hydrogen monitoring system is designed to provide online monitoring of gas samples for hydrogen content and to allow for more detailed laboratory analyses of grab samples. The system is designed for use on any tank. Details are provided in the design documentation (Atencio 1992).

The system schematic is shown in SARR-002 (Van Vleet 1994). The main components of the sampling system are the main flow loop, the auxiliary flow loop, the grab sample loop, and the calibration system.

The sample enters the stainless steel tubing at the sample probe location and is routed to an environmentally controlled enclosure, i.e., the cabinet housing the instrumentation. The stainless steel tubing is heat traced to prevent condensation. The sample then passes through a series of particulate filters (a 25-μm and two 0.2-μm filters) with a differential pressure indicator to determine filter

performance. A vacuum pump (Atencio 1992) is used to pull the sample through the system. The system upstream of the vacuum pump is operated below atmospheric pressure; consequently, gas cannot leak out of the system. The portion of the system located downstream of the vacuum pump is located outside of the environmentally controlled enclosure. Thus, any gas leaks that might occur in the downstream leg of the system cannot build up but are released to the atmosphere.

The main flow loop provides the primary monitoring for hydrogen. The hydrogen sensor used is an electrochemical cell that provides an electrical signal proportional to the hydrogen partial pressure in the gas sample. The sensor range is 0 to 50% hydrogen. An inline flow-measuring element is provided so that periodic adjustments to the flow rate can be made using the flow control valve.

The auxiliary flow loop provides a redundant hydrogen monitoring system. This system uses a different type of hydrogen sensor than the main flow loop. The auxiliary flow loop uses a solid-state electrolytic sensor to measure the hydrogen. It indicates the results using a scale with a range of 0 to 100 ppm of hydrogen. An identical solid-state electrolytic sensor measures the hydrogen and indicates the results using a scale with a range of 0 to 5% by volume of hydrogen. Both sensors are encased in explosion-proof housings (Atencio 1992). A flow indicator/controller is provided for measurement and control of low volume flows.

The grab sampling loop permits gas specimens to be collected. Gas sample cylinders are inserted in the assembly using ring seal vacuum tube fittings. The cylinders are evacuated by opening the valves downstream of the cylinders. The local isolation valve is opened and the flow through the cylinder is controlled with the flow control valve based on the flow indicator. Once the desired flow is attained for a specified amount of time, the isolation and the cylinder valves are closed in a sequence to ensure sample collection.

A calibration gas system is provided to periodically calibrate the sensors. The calibration standards are nominally 0.5%, 3.0%, and 100 ppm hydrogen in air. The calibration system has a flow indicator and controller specifically designed for low volume flows.

An alarm and annunciator system is provided on the system. Both the electrochemical and solid-state hydrogen sensors are alarmed for high hydrogen concentrations. The alarms include a red strobe light beacon, an audible wavering horn, a local panel light, and a remote high hydrogen alarm. In addition, low sample flow, low sample gas temperature, low calibration gas temperature, or high/low cabinet temperature will activate an amber strobe light, an audible wavering horn, a local panel lamp, and a remote trouble alarm. These alarms provide audible and visual indications that the system needs to be maintained, or that the hydrogen level in the tank is above a preset percentage of the lower flammability limit.

3.3.2.3 Interlock Systems

Certain tank farm equipment, such as process pumps and HVAC fans, are interlocked to detect off-normal conditions and to protect personnel, equipment, and the environment. The tank farm transfer pumps, for example, are interlocked to shut down whenever a leak is detected in a

process pit or if a transfer line encasement is activated. The purpose of interlocking detection and equipment circuitry is to detect abnormal conditions and protect personnel, environment, and equipment. Pump shutdown interlock sequences related may be initiated from various sources including leak detectors, flush line limit, and pressure switches. In addition, pumps are interlocked with their own internal circuitry, such as when the pump motors draw unusually high or low amperage. In general, pumps are interlocked with only those detectors that can detect an off-standard condition caused by that pump.

All central pump pit pumps in the 200 Area DSTs are shut down together, by interlock, if any of the following occur:

- Any one of the master shutdown switches in the 242-A Evaporator control room is activated.
- There is a leak in any tank farm valve or pump pit.

A tank farm area radiation monitor relay, process pit leak detector relay, and the master shutdown switch relay must be activated to allow the master shutdown relay (e.g., K-241-AN-MSDA, K-241-A-MSDA) to be activated. Anything that activates the master shutdown relay will shut down the 241-AN, 241-AP, 241-AW, 241-AY, 241-AZ, and P-B-2 pumps and prevent the pumps from restarting.

If any one of the process pit leak detector relays is activated because of a leak or circuit failure, the interlock relay will activate, sending a "fail" signal to three locations. One of these signals activates the control room's leak detection alarm for the process pits. The second signal is sent to the instrument building's leak detector transmitter. The third signal activates the master shutdown relay, which thereby trips other interlocks and stops the pumps.

3.3.2.3.1 Pump Interlocks

Pump shutdown interlocks are related to various sources including high-radiation detectors, leak detectors, flush line limit and pressure switches. In addition, pumps are interlocked with their own internal circuitry, such as when the pump motors draw unusually high or low current. Pump control, interlock circuitry, and master pump shutdown system devices are provided to prevent contamination of the environment, equipment, and facilities if a leak occurs during waste transfer operations. The existing pump in AW-105 will not be used for either transferring K Basin sludge into the tank or for retrieval. However, a similar pump shutdown system is anticipated to be provided on the K Basin sludge transport system.

3.3.2.3.2 Pressure/Limit Switches

DST transfer pumps, jumpers, and transfer lines are equipped with safety interlock systems that prevent operation or initiate an alarm when a hazardous condition exists.

Limit switches are primarily used in valve pits where transfer line routing changes are made. A limit switch is an internal gear mechanism that activates a set of contacts when the drive shaft has been moved. A small lever extending from the limit switch is mechanically triggered as the valve

position is changed. If a limit switch is activated during a transfer, it will shut down any associated transfer(s).

Pressure switches are primarily used in flush pits where steam or raw water is accessed for tank farm use. Pressure switches are mounted at strategic locations within the flush pit to sense line pressure fluctuations. In most cases, when the line pressure reaches its preset limit, it will cause the associated pump to shut down. For valve pits identified on a graphic routing verification panel board, limit switches are interlocked to corresponding pressure switches and will not normally shut down the transfer. There are many exceptions to these rules, such as saltwell jet pumps and the 241-AP valve pit, which contain both pressure and limit switches.

3.3.2.3.3 HVAC Interlocks

Another type of interlock is represented by HVAC fans, which are interlocked to shut down if the exhaust stack CAM units detect high radiation in the exhaust stack, the redundant train is automatically activated. The interlock circuitry for HVAC equipment shuts down the ventilation systems if continuous air monitoring units detect high radiation in DST or catch station exhaust vent lines.

3.3.3 Process Description

This section describes the activities and operations performed within the Tank Farms facilities necessary to support and understand the hazard and accident analyses performed in this report.

Tank Farm processes or operations which support safe management of the radioactive and hazardous waste include:

- Waste Storage
- Waste Transfers
- Waste Characterization

The following sections will discuss each of these operations performed in TWRS facilities, with special focus on the DSTs. The process design criteria for the 241-AW Tank Farm is summarized in Table 3.3.

3.3.3.1 Waste Storage

The objective of the tank waste storage is to keep the waste isolated from the environment and potential human exposure, until final disposition of the waste and associated facilities.

Tanks that may receive and store waste from either processing activities or other tanks are considered in-service tanks and those that cannot or will not receive waste are considered out-of-service tanks. The 28 double-shell underground waste storage tanks are all considered in-service tanks and those not on the Watch List may receive liquid waste from processing activities or other tanks.

Table 3.3 Process Design Criteria for the 241-AW Double-Shell Tank Farm

Component or System	Process Variable	Process Design Criteria
Primary tank, secondary liner, and reinforced concrete tank (Process design criteria used for all components in contact with waste unless otherwise noted)	Minimum/maximum internal pressure (in. WG)	-6/60
	Heat generation rate (Btu/h)	1 E+05
	Liquid specific gravity, maximum	2.0
	Maximum liquid temperature (°F)	350
Slurry piping	Maximum slurry pressure (lb/in^2 gauge), temperature (°F)	400/200
	Steam purge pressure (lb/in^2 gauge)	100, Sat.
	Fluid velocity (ft/s per gal/min)	3-10 per 32-100
	Insulation/heat trace temperature control range (°F)	120-200
Supernatant piping	Supernate pressure (lb/in^2 gauge), temperature (°F)	275/200
	Steam purge pressure (lb/in^2 gauge)	100, sat.
	Insulation/heat trace temperature control range, (°F)	120-200
Ventilation exhaust	Maximum radionuclide releases	ERDA Ch. 0524
Annulus ventilation system	Flowrate (ft^3/min) in combination with primary vent	Eject 1 E+05 BTU/h

3.3.3.2 Waste Transfer

The objective of the waste transfer operations is to support the function of waste storage by safely moving liquid waste from one location to another by procedure using a pre-planned, pre-established route in response to processing requirements, changing tank storage needs, or a loss of

tank integrity.

In general, the types of waste transfer operations include: Tank farm-to-tank farm waste transfers; DST to DST waste transfers within a tank farm; SST to DST transfers (i.e., SST interim stabilization activities); transfers between process facilities and DSTs; and others. The transfer activity addressed in this safety assessment will involve transfer to a DST from a truck-mounted transportation container.

Prior to transferring waste, a number of activities are performed by Tank Farm operations. These activities include verifying that there is sufficient space available in the receiving tank, verifying the waste chemistry (via sampling and characterization) to be sure that the waste to be transferred is compatible with the receiving tank waste, performing criticality safety analyses to ensure that stored waste will remain in a sub-critical state, and verification of equipment operability. A waste stream compatibility assessment is conducted and waste stream profile sheets are prepared. In addition, a baseline material balance is developed for both the sending and receiving storage tanks prior to the transfer, which is periodically reviewed during the transfer to provide early leak detection and avoid filling tanks above safe limits.

Following completion of the transfer all equipment associated with the transfer is de-energized, transfer lines are flushed, and a final material balance for both tanks is recorded.

3.3.3.3 Waste Characterization

Tank waste characterization is an integral part of the overall effort to control the hazards associated with radioactive waste stored in the underground tanks at the Hanford Site. Characterization of the wastes in the Hanford Site storage tanks is performed to assist in the understanding and resolution of safety issues; to allow for the continued safe storage and management of the wastes until retrieval operations begin; to support decisions on whether or not two or more waste streams may be commingled (i.e., waste compatibility); and to support the development and selection of waste removal, treatment, and final disposal options.

3.3.4 Safety Support Systems

Safety support systems for the AW Tank Farm include the following:

- Radiation protection.
- Effluent monitoring.
- Fire Protection.

These systems are discussed in the following subsections.

3.3.4.1 Radiation Protection

In addition to inherent radiation protection features (i.e., buried tanks and piping, thick concrete walls, roofs, and ceilings), the radiation protection system is primarily comprised of portable

and fixed instruments.

3.3.4.1.1 Portable Monitoring Systems

Portable radiation monitoring systems are used in the tank farms on an as-needed basis. Portable CAMs are generally placed inside of operating facilities for personnel safety. The radiation protection program for tank farms and the selection and use of portable instruments are discussed in the tank farm FSAR (under development).

3.3.4.1.2 Fixed Monitoring Systems

Fixed radiation monitoring systems within the AW Tank Farm facilities include radiation detectors and CAMs. These systems are described below:

- Radiation detection probes are located in the dry wells adjacent to leak detection pits. The systems serve a dual purpose of indicating radiation levels as well as serving as a backup for liquid detection systems.

- CAMs sample and monitor air for the presence of radionuclides in areas of potential airborne radioactivity. The CAMs are generally found in areas such as primary and secondary exhaust stack air outlets, annulus exhaust stack air outlets and in most instrument and process buildings.

All tank farm fixed radiation detection instruments are designed with a fail-safe mechanism so that any system failure will activate an alarm.

3.3.4.2 Effluent Monitoring Systems

There are two exhaust stack effluent monitoring programs within the AW Tank Farm. One program is associated with radionuclide sampling and monitoring and the other program is associated with sampling and monitoring of ammonia gas. The programs associated with sampling and monitoring hydrogen gas and other flammable species are directly related to the tank vapor space and have been addressed previously. The following subsection will discuss, generically, the radionuclide sampling and monitoring system.

The radionuclide sampling systems consist of both record sampling and CAMs. The record sample portion of the sampling system is considered the regulatory portion of the system used to quantify and report the dose received by the public from operation of that particular emission point. The CAMs are considered safety devices and are set to alarm if emissions are detected above preset levels. The CAMs can also be used as backup regulatory devices. The difference between the CAMs and the record samplers is the fact that there is a detector above or near the collection filter in the CAM, while the record samplers only contain a collection filter.

To ensure sample quality, a flow meter and regulator, totalizer, and vacuum pump are used to

control and measure the flow rate through the sampling system. The air coming from the stacks is first run through the record sample filter paper, then the flow meter and totalizer, and finally the vacuum pump which sucks the air through the system. The flow regulator adjusts automatically to maintain an established flow within the system. In addition, a flow switch is provided 1) to prevent damage to the sample collection filter paper, 2) to prevent nonrepresentative sampling due to anisokinetic sampling conditions, and 3) to indicate vacuum pump problems (e.g. no flow or failed condition).

3.3.4.3 Fire Protection Systems

Fire protection systems at tank farms include detection, alarm, and suppression elements. The fire protection systems are fully described and evaluated in the WHC-SD-WM-FHA-020 *Tank Farms Fire Hazards Analysis* (Barilo 1996).

Fire protection features are described below.

200 East and 200 West Area Water Supply

All water for the 200 Areas is supplied by two separate systems, the Raw Water Supply (RWS) and the Sanitary Water Supply (SWS). These are shared systems, providing water for sanitary, process, and fire protection uses. The water systems for the tank farm areas are described in Section 3.3.5.1.

Fire Suppression and Extinguishing Systems

Fire suppression and extinguishing systems within the tank farm facilities are limited to wet and dry pipe sprinkler systems and a Halon total flooding system. The fire systems associated with the 241-AW tank farm are the smoke detectors installed in Building 241-AW-271. The detectors are manually controlled. In Building 241-AW-272, a wet-pipe fire suppression system is installed. The adequacy of these systems are discussed in WHC-SD-WM-FHA-020.

Tank Farm Fire Detection System

Where required, smoke, heat and manual fire detection is provided within tank farm facilities. The detectors alarm to the Hanford Fire Department (HFD) via Radio Frequency Alarm Reporters (RFAR). The RFAR, transmits a radio signal to the Hanford Site 200 Area East/West Fire Station. The signal may be a trouble alarm (i.e., problem with a system component), supervisory alarm (i.e., a monitored gate valve being closed), or a fire alarm. The HFD takes appropriate action upon receiving a signal. Installation and coverage of the fire alarms are based on NFPA 72. The location and installation of the detectors and alarms are assessed in WHC-SD-WM-FHA-020.

Fire Hydrants

Fire hydrants are provided throughout the 200 East and 200 West Areas. These hydrants are connected to either the RWS and SWS grids. Their coverage and adequacy are evaluated in WHC-SD-WM-FHA-020.

Fire Extinguishers

Portable fire extinguishers are provided throughout the tank farms. Mobile equipment used in the area are also equipped with portable fire extinguishers. Installation of extinguishers, inspections, maintenance and employee training are in compliance with NFPA 10.

3.3.5 Utility Distribution Systems

Utility distribution systems for the Hanford Site underground waste storage tanks and their associated facilities, described in the following paragraphs, include the following:

1. Water Supply Systems.
2. Steam Supply Systems.
3. Compressed Air Systems.
4. Electrical Power Distribution System.

3.3.5.1 Water Supply Systems

All water for the 200 East Area is supplied from the Hanford Site Export Water System (EWS). Export water is defined as water that is pumped from the Hanford Site reservoir to reservoirs located in the 200 East and West areas. Water is distributed throughout the area by the two separate systems, the RWS and the SWS. Raw water is untreated, and unchlorinated water is used principally for cooling, flushing, and dilution systems. Sanitary water is treated (filtered, purified, etc.) water used for drinking and sanitary facilities. These are shared systems, both providing water for sanitary, process, and fire protection uses.

Due to the lack of redundant water supplies in the 200 East Area, unapproved pumps and controllers, and verification that the water system can sustain earthquake damage, the water supplies do not meet the minimum requirements of National Fire Protection Association (NFPA), Factory Mutual (FM), DOE 5480.7 and DOE 6430.1A.

3.3.5.2 Steam Supply Systems

Steam systems are not needed for sludge offload or storage operations. Steam was formerly supplied to AW tank farm from the 18-in. PUREX plant main. This system has since been blanked off from both the PUREX and AW farm ends of the steam line. Therefore, there is no possibility that steam line failures or inadvertent operation of the steam system could affect K Basinsludge offloading and storage activities.

3.3.5.3 Compressed Air Systems

Normal and emergency backup pressurized-air supply systems are provided and maintained for the air spargers, jets, process flowmeters (instrument air), ventilation controllers, and air samplers.

3.3.5.4 Electrical Power Distribution System

The main source of power to the 200 Areas comes from the Bonneville Power Administration (BPA) via a major substation known as Midway located near Priest Rapids Dam. The BPA Midway substation has three 230-kV buses. Each BPA midway bus section is supplied by a line from the Priest Rapids generating station. The BPA Midway buses No. 1 and No. 3 are also supplied by lines which connect to the Grand Coulee 230-kV substation and to 230-kV substations in the lower Columbia River power system. The Grand Coulee and lower Columbia River substations are interconnected to the BPA 500-kV transmission system. The BPA 500-kV and 230-kV transmission systems interconnect to all of the Columbia and Snake River hydroelectric generating stations and northwest steam generating plants and are also interconnected to California and British Columbia power network systems.

The Hanford Site 230-kV loop, in addition to supplying power to its facilities and other DOE substations, normally supplies power to Ashe and White Bluffs substations. In the event that both Midway power sources are lost, power will flow into the Hanford Site 230-kV loop from the Ashe line with sufficient power for normal operations.

The flow of power from the Ashe line into the Hanford Site 230-kV loop is supplied from a 115-kV line connected to the White Bluffs substation. One 115-kV line at the White Bluffs substation is connected to the BPA Franklin substation, and the other 115-kV line is connected to the BPA Benton switch.

Power is fed by two lines to the A-8 Substation located near the intersection of the Yakima Barricade and 100 N highways (Route 11A and Route 4 North, respectively). The 251-W Building adjacent to the A-8 Substation contains the necessary switchgear and control equipment. The A-8/251-W Substation reduces the power and distributes it through four lines each to the 200 East and 200 West Areas. At this point the power is distributed to each individual tank farm via the 200 Areas power distribution system.

3.3.6 Auxiliary Systems and Support Facilities

Auxiliary systems and support facilities include administrative areas, control facilities, change houses, communication systems, lighting, and sewage treatment. Description of these facilities may be found in the TWRS BIO (LMHC 1997).

3.5 REFERENCES

10 CFR 71, Packaging and Transportation of Radioactive Material

49 CFR 173, Transportation, Shippers - General Requirements for Shipments and Packaging, Subpart I, Radioactive Materials

49 CFR 393.102 (d), Transportation, Parts and Accessories Necessary for Safety Operations, Security Systems, Attachment to the Vehicle

ANSI Standard N14.5, American National Standards Institute, *Radioactive Materials - Leakage Tests on Packages for Shipment*, sections 6.3.1 and 6.5

ASTM 1973, *Sampling method*, ASTM E-300-73, American Society for Testing and Materials. Philadelphia, Pennsylvania

Atencio, J. K., 1992, *System Description of Standard Hydrogen Monitoring Systems*, WHC-SD-WM-SDD-001, Rev. 0, Westinghouse Hanford Company, Richland, Washington

Barilo, N. F., 1996, *Tank Farms Fire Hazards Analysis*, WHC-SD-WM-FHA-020, Rev. 0, Westinghouse Hanford Company, Richland, Washington

DOE Order 5480.7A, *Fire Protection*, 1993, U.S. Department of Energy, Washington D. C.

LMHC 1997. *Tank Waste Remediation System Basis for Interim Operation*, WHC-SD-WM-B10-001, Rev. F. Lockheed-Martin Hanford, Co. Richland, Washington.

NFPA 10. 1990c, *Portable Fire Extinguishers*, National Fire Protection Association, Quincy, Massachusetts

NFPA 13. 1994, *Installation of Sprinkler Systems*, National Fire Protection Association, Quincy, Massachusetts

NFPA 72. 1990b, *Installation, Maintenance, and Use of Protective Signaling Systems*, National Fire Protection Association, Quincy, Massachusetts

NFPA 101. 1988, *Life Safety Code*, National Fire Protection Association, Quincy, Massachusetts

RLID 5480.7, *Fire Protection*, 1990, U.S. Department of Energy, Richland, Washington.

Tomaszewski, T. 1996, *Packaging Design Criteria for K East Basin sludge Transportation System*, WHC-SD-TP-PDC-035, Rev. 0, Westinghouse Hanford Company, Richland, Washington.

WHC. 1991. *Double-shell Underground Waste Storage Tank-Riser Survey*. WHC-SD-RE-TI-093, Rev. 1. Westinghouse Hanford Company, Richland, Washington.

WHC. 1993. *Double-Shell Tank Farm Facility Safety Analysis Report*, WHC-SD-WM-SAR-016, Westinghouse Hanford Company, Richland, Washington.

Van Vleet, 1994, *Safety Basis for Activities in Double-Shell Flammable Gas Watch List Tanks,* WHC-SD-WMM-SARR-002, Rev. 1

WHC. 1994, *242-A Evaporator/Crystallizer Safety Analysis Report*, WHC-SD-WM-SAR-023, Rev. 1B, Vol.1, Westinghouse Hanford Company, Richland, Washington

WHC. 1996, *Conceptual Design Report for the Sludge Receiving Station*, WHC-SD-SNF-CDR-008, Westinghouse Hanford Company, Richland, Washington.

APPENDIX 3A

AW TANK FARM DESIGN CRITERIA

APPENDIX 3A

AW TANK FARM DESIGN CRITERIA

Reprinted from WHS-SD-WM-SAR-016, Rev. 1 (WHC 1993)

References:

(1) ARH-CD-362, Functional design Criteria, Additional High-Level Waste Storage Facilities, K. H. Tanaka (June 30, 1975)

(2) SD-RE-TI-008, Compliation of Basis Letter Referenced in 241-AN, AW, AY, AZ, and SY Process Specifications, T. J. Vanetz (January 27, 1982)

Number of Tanks	-	6
Liquid Storage Capacity, Each Tank	-	1E+06 gal. (Sp. Gr 2.0) per tank
	-	1.14E+06 gal. (Sp. Gr. 1.7) per tank
Primary Tank Diameter	-	75 ft
Secondary Tank Diameter	-	80 ft
Earth Cover (Backfill)	-	6.5 ft
Live Loading on Backfill Over Tank	-	40 lb/ft^2 uniform plus 50 tons concentrated
Internal Vacuum	-	6 in. H_2O maximum
Internal Pressure	-	60 in. H_2O maximum
Waste Characteristics		
- Temperature	-	350°F, maximum[2]
- Heat Generation Rate	-	100,000 Btu/hr per tank maximum
- pH	-	8 to 14
- Specific Gravity	-	2.0 maximum
Seismic Acceleration	-	0.25g horizontal, 0.17g vertical
Wind Loads	-	Uniform Building Code Requirements

[2] The tanks were analyzed for structural effects of thermal cycling and liquid level cycling. Even though wastes may enter the tanks up to 350°F, their temperature will fall quickly to less than the maximum tank wall temperature of 200°F by heat conduction and dilution.

Stress Relief (Primary Tank)	-	1,100°F for 1 h
Design Life	-	50 yr based on 1 mil corrosion/yr
Tank Wall Temperature	-	200°F maximum
Primary Tank Construction Material	-	ASTM A 537, Class 1 carbon steel
Secondary Tank Construction Material	-	ASTM A 537, carbon steel
	-	Reinforced concrete
Process Piping	-	American National Standards Institute B-31.1 Criteria
	-	0.25% slope minimum
	-	Pressure: 400 psi
	-	Encased
	-	Heat-traced
Annulus Ventilation System	-	4,800 cfm maximum
	-	Double HEPA filtered
	-	Stack monitor/sampler
	-	Redundant system
Primary Ventilation System	-	1,000 cfm maximum
	-	Prefilter
	-	Double HEPA filtered
	-	Stack monitor/sampler
	-	Redundant system
Air-Lift Circulators	-	2 air-lift circulators in AW-102 for feed tank purposes only
Radiation Exposure	-	Adequate shielding from cover blocks and earth cover
	-	1.0 mR/h

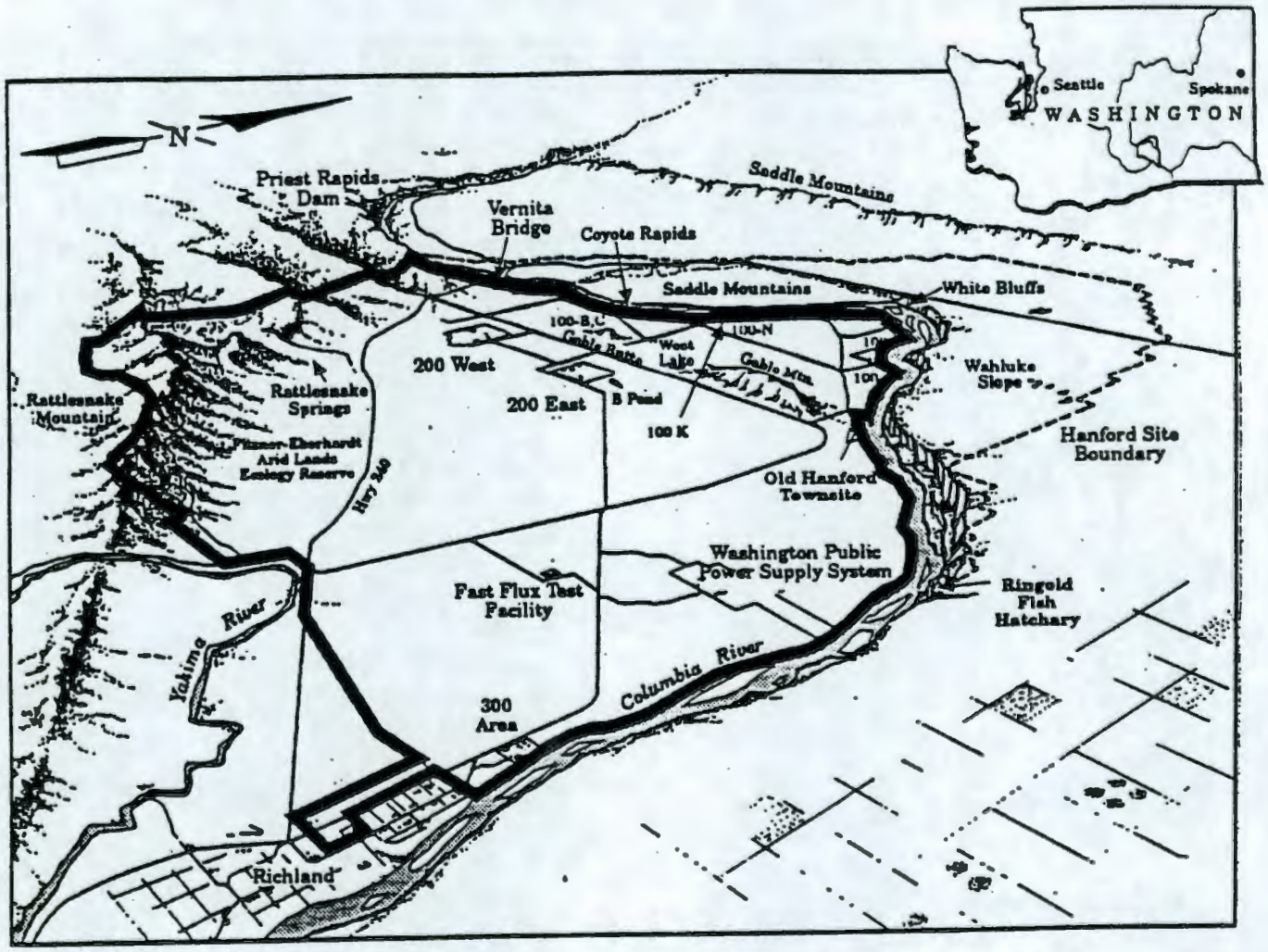

Figure 3.1. Map of Hanford Site

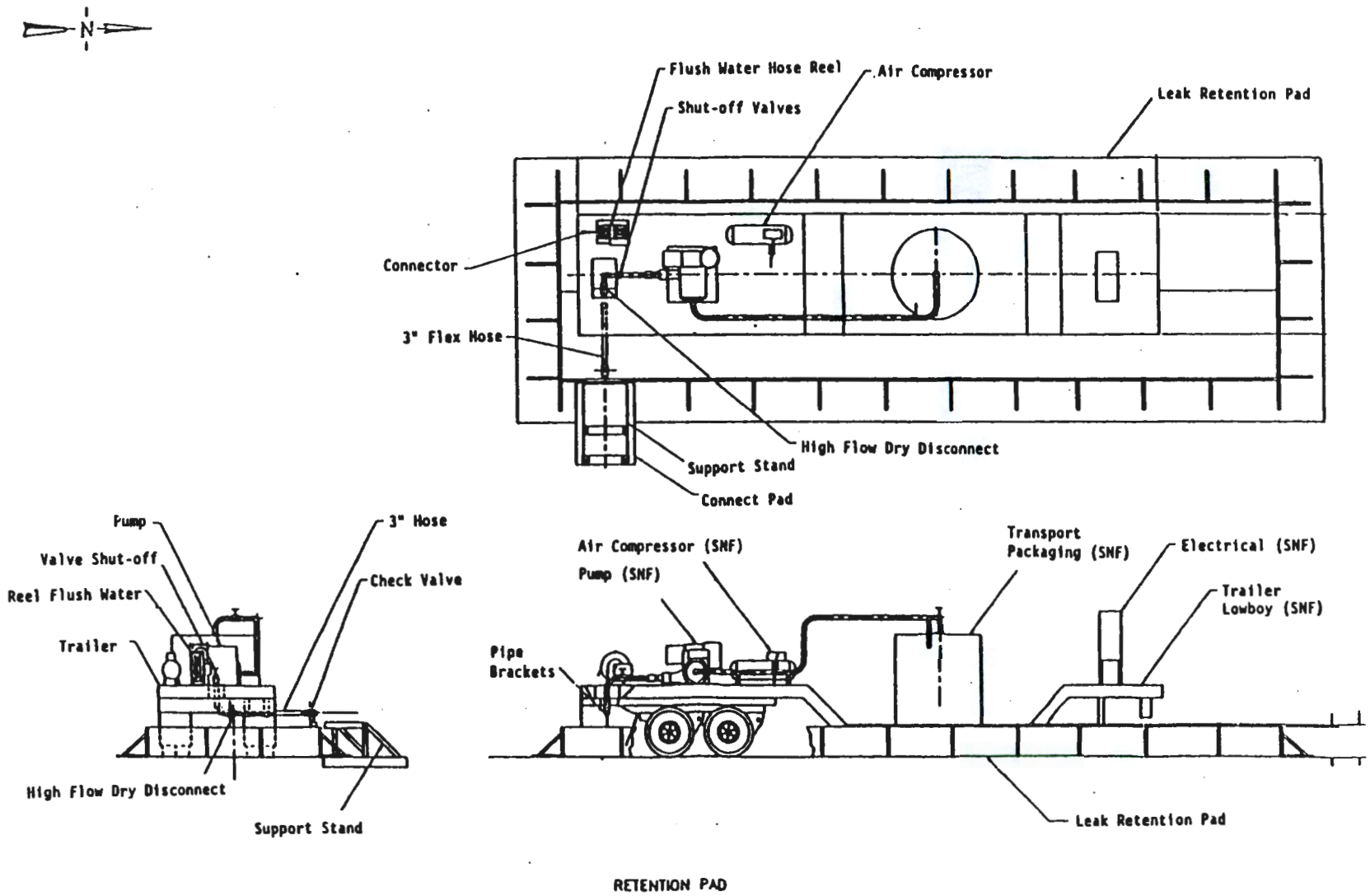

Figure 3.2. Conceptual Illustration of the Sludge Transportation System

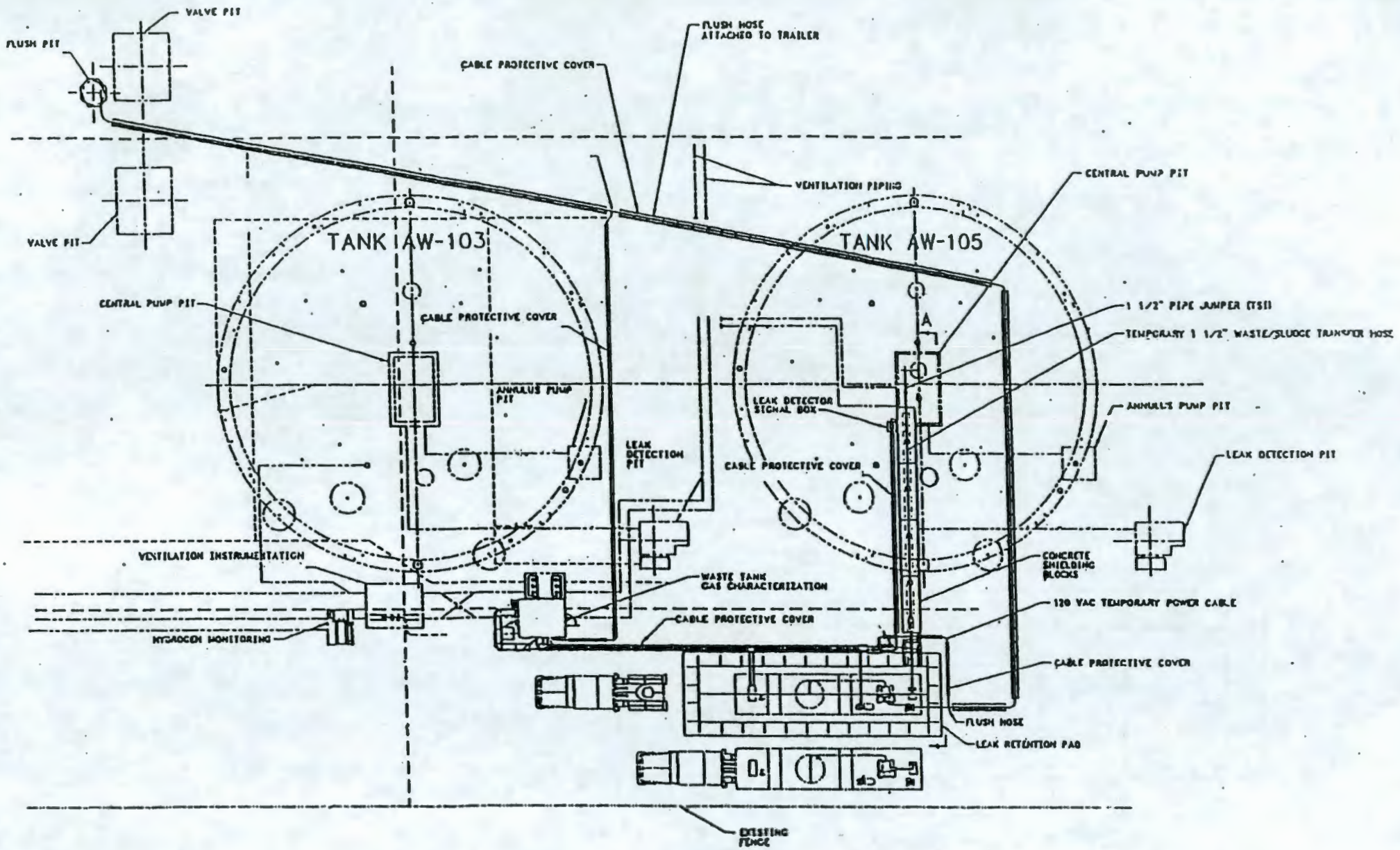

ARRANGEMENT, TEMPORARY WASTE TRANSFER LINE

Figure 3.3. Conceptual Drawing of the Sludge Receiving Station

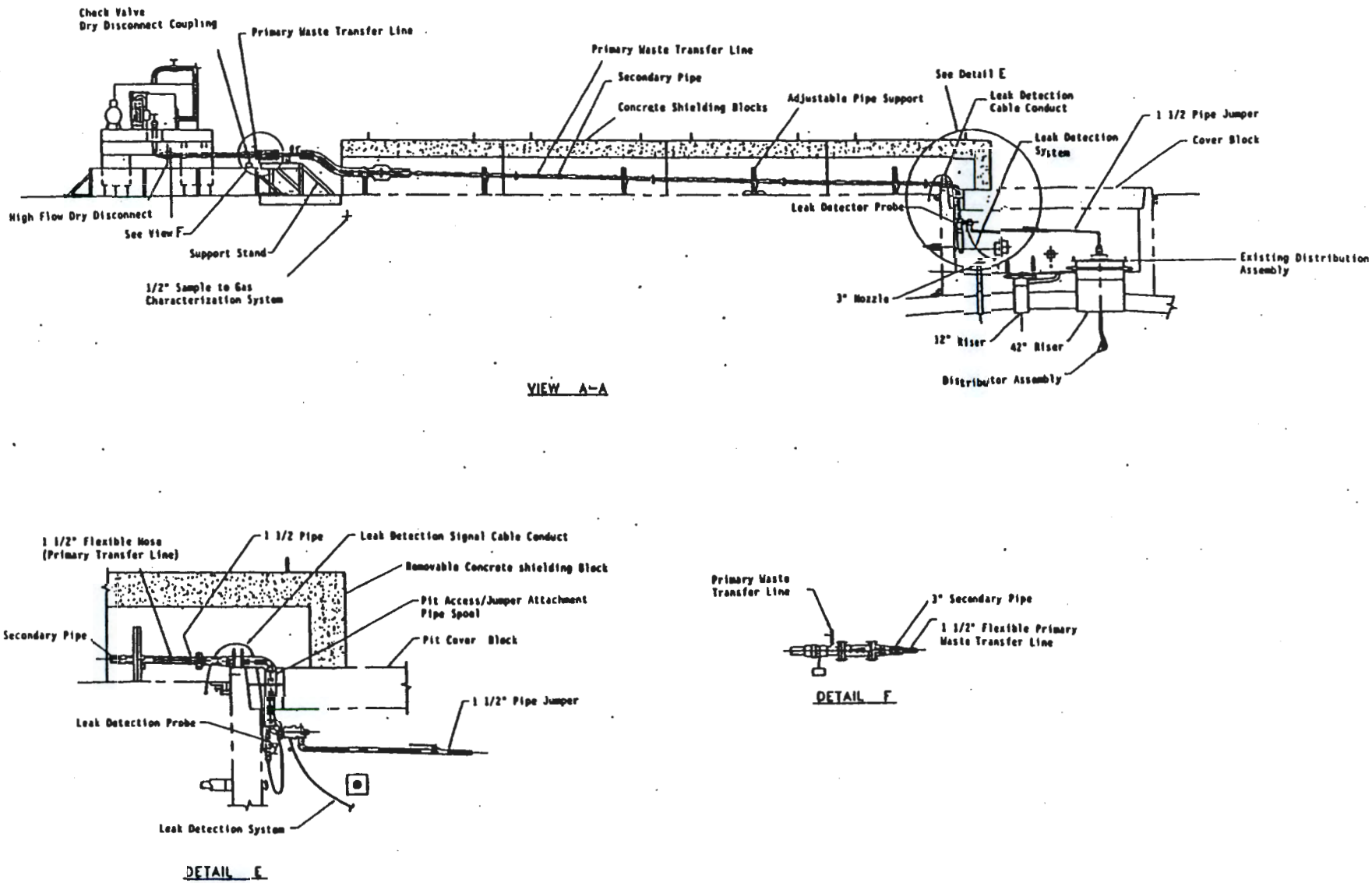

Figure 3.4. Sludge Receiving Station Overground Transfer Line

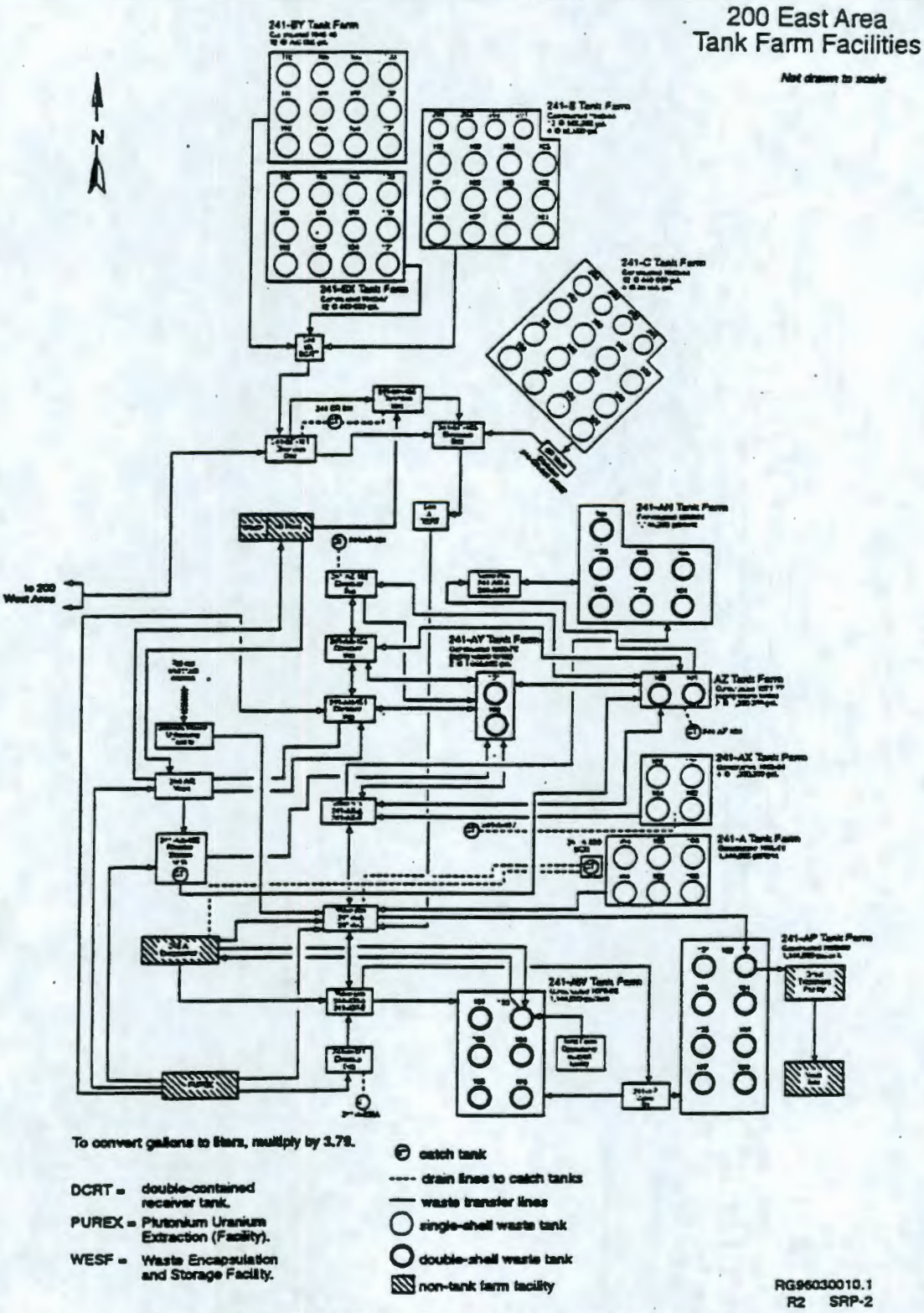

Figure 3.5. Tank Farm Configuration at the 200 East Area

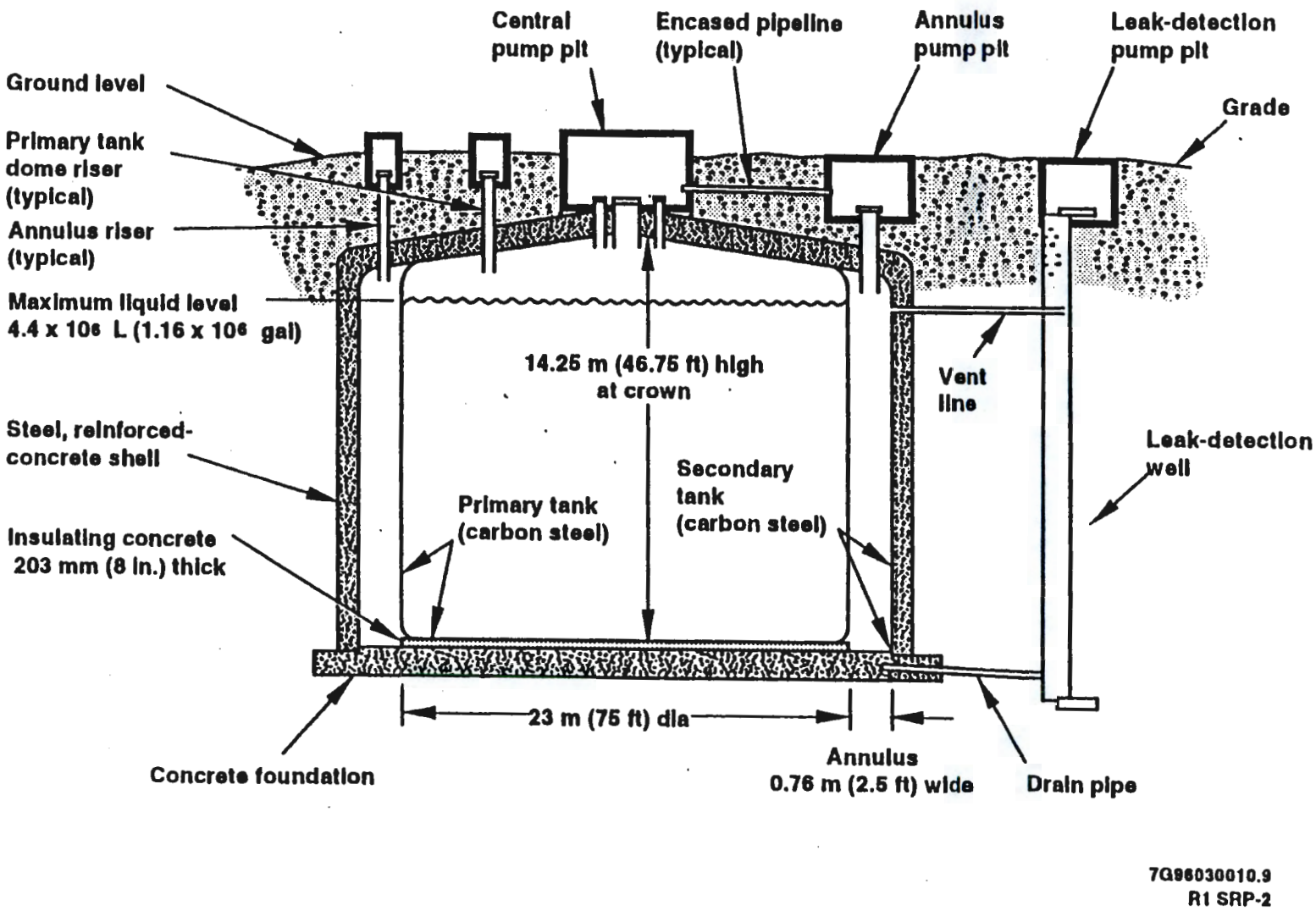

Figure 3.6. Graphical Representation of a Double-Shell Tank

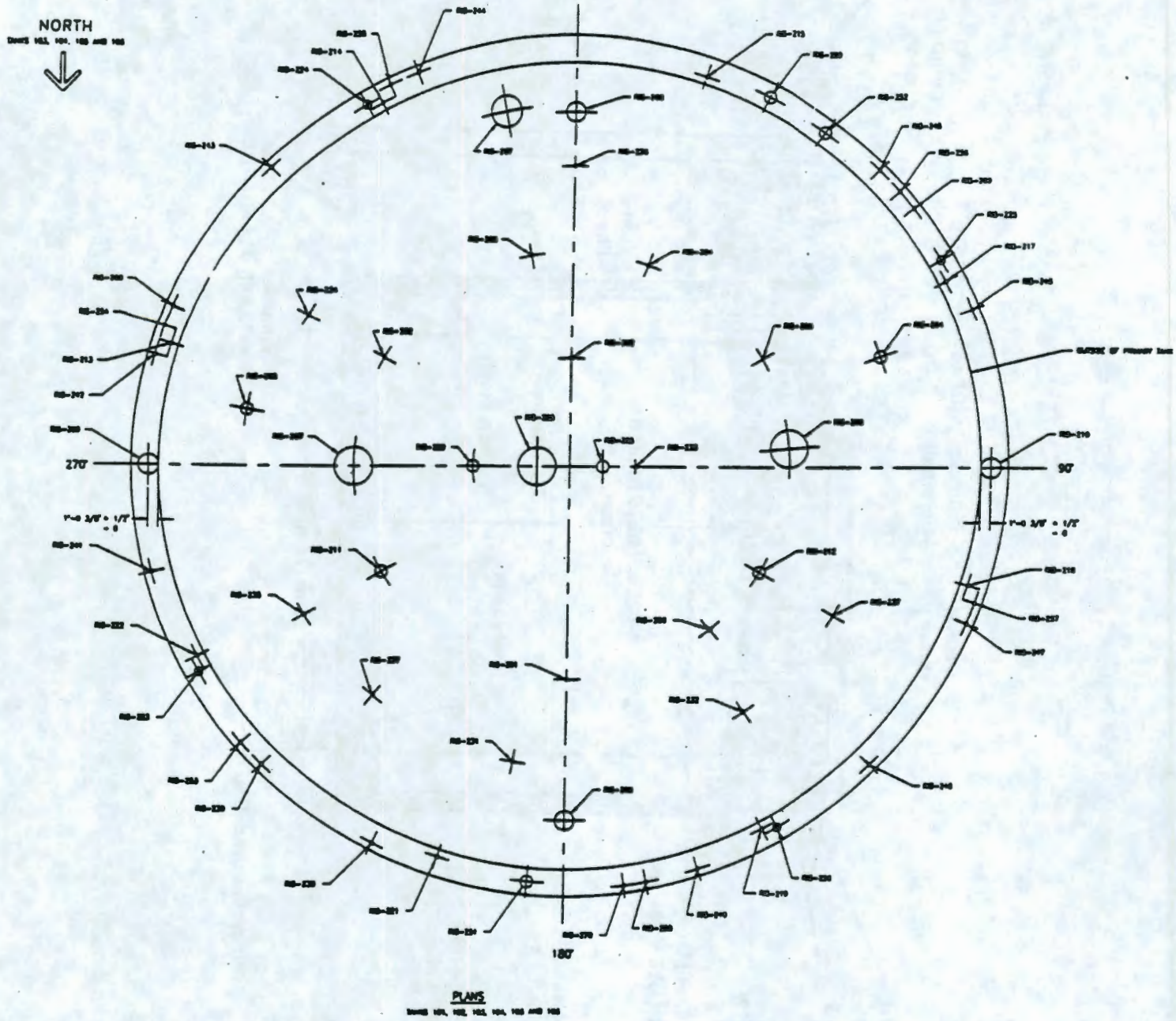

Figure 3.7. Tank Penetration Schematic

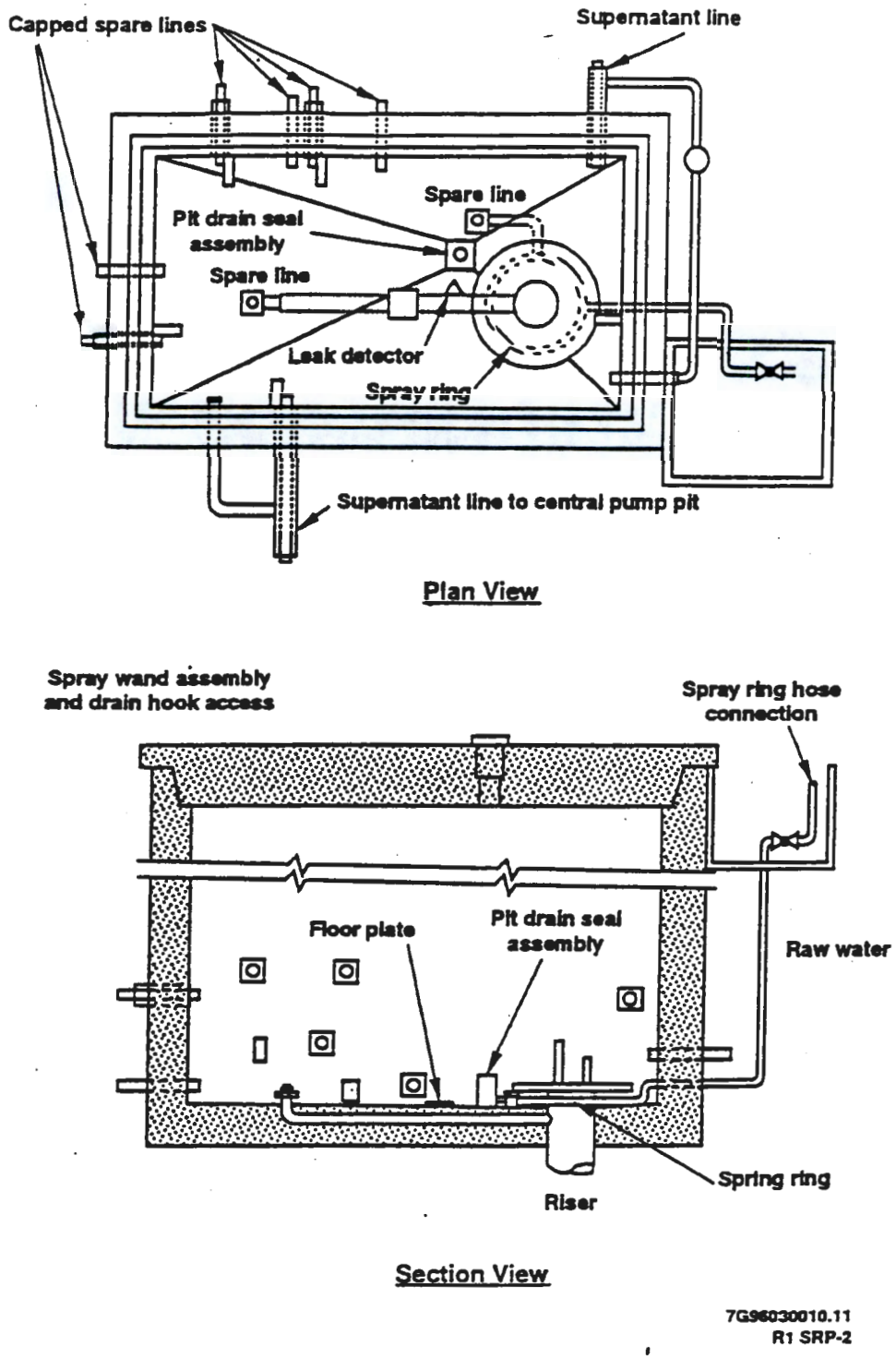

Figure 3.8. Typical Central Pump/Distributor Pit

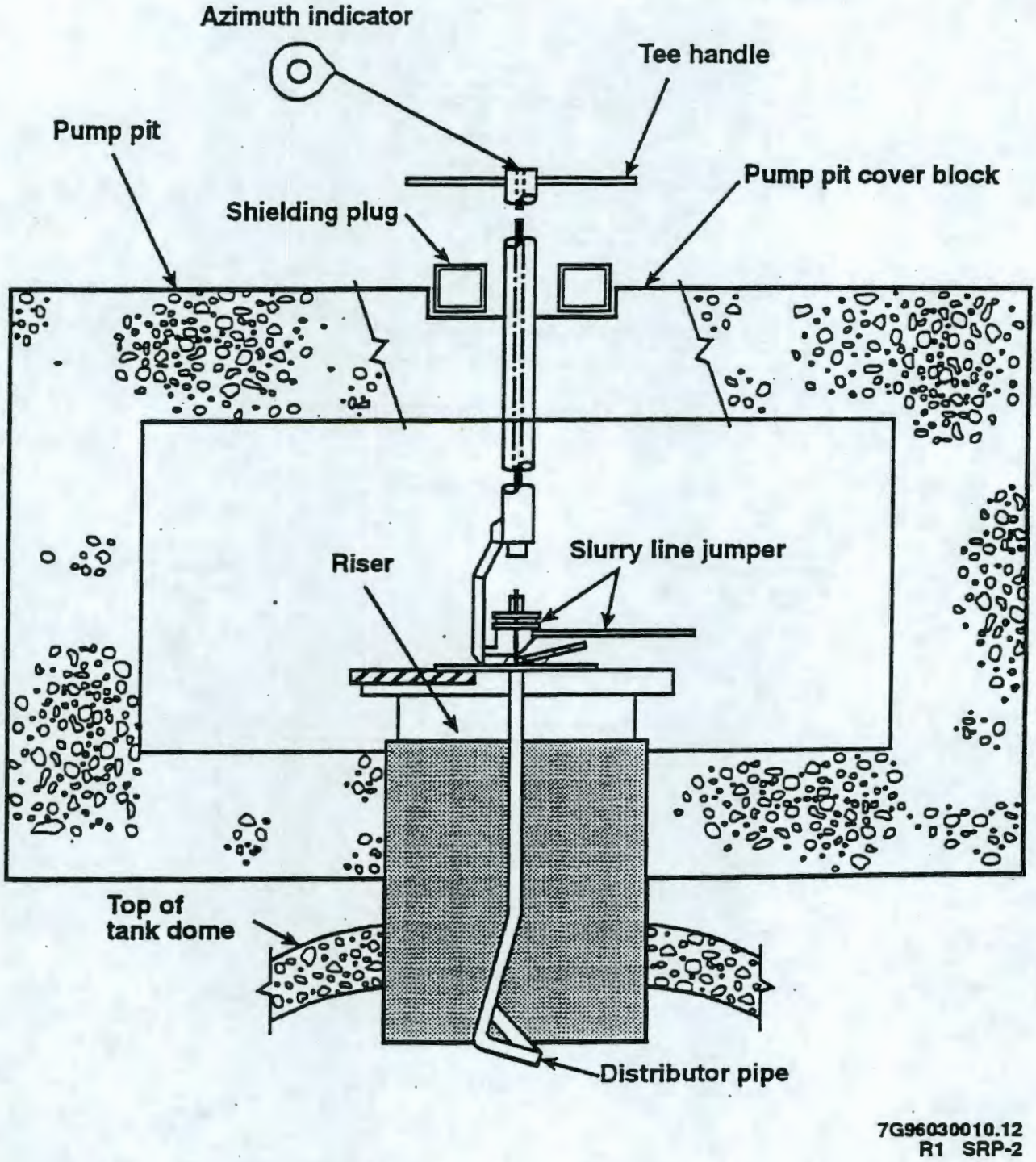

Figure 3.9. A Slurry Distributor

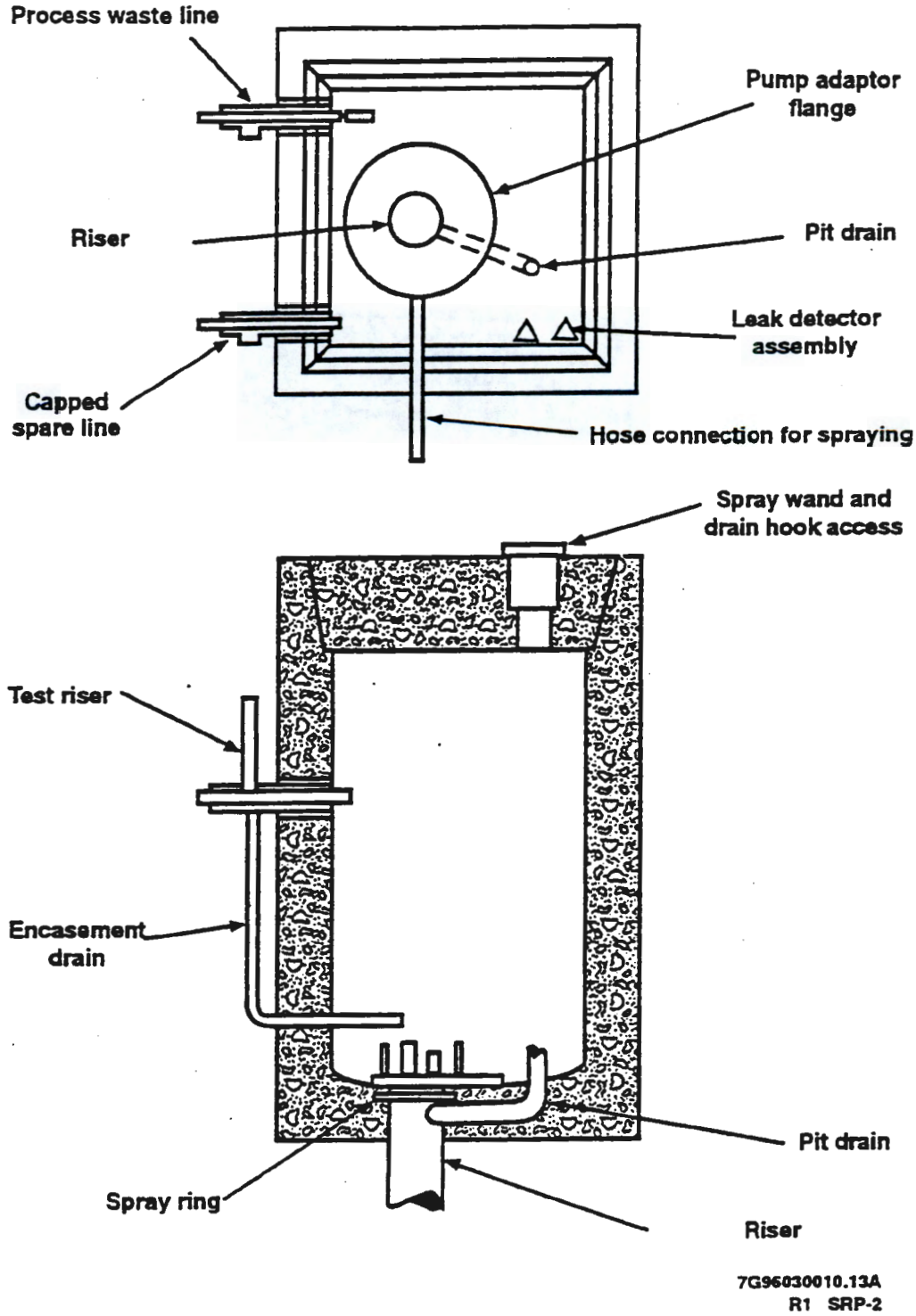

Figure 3.10. Typical Annulus Pump Pit

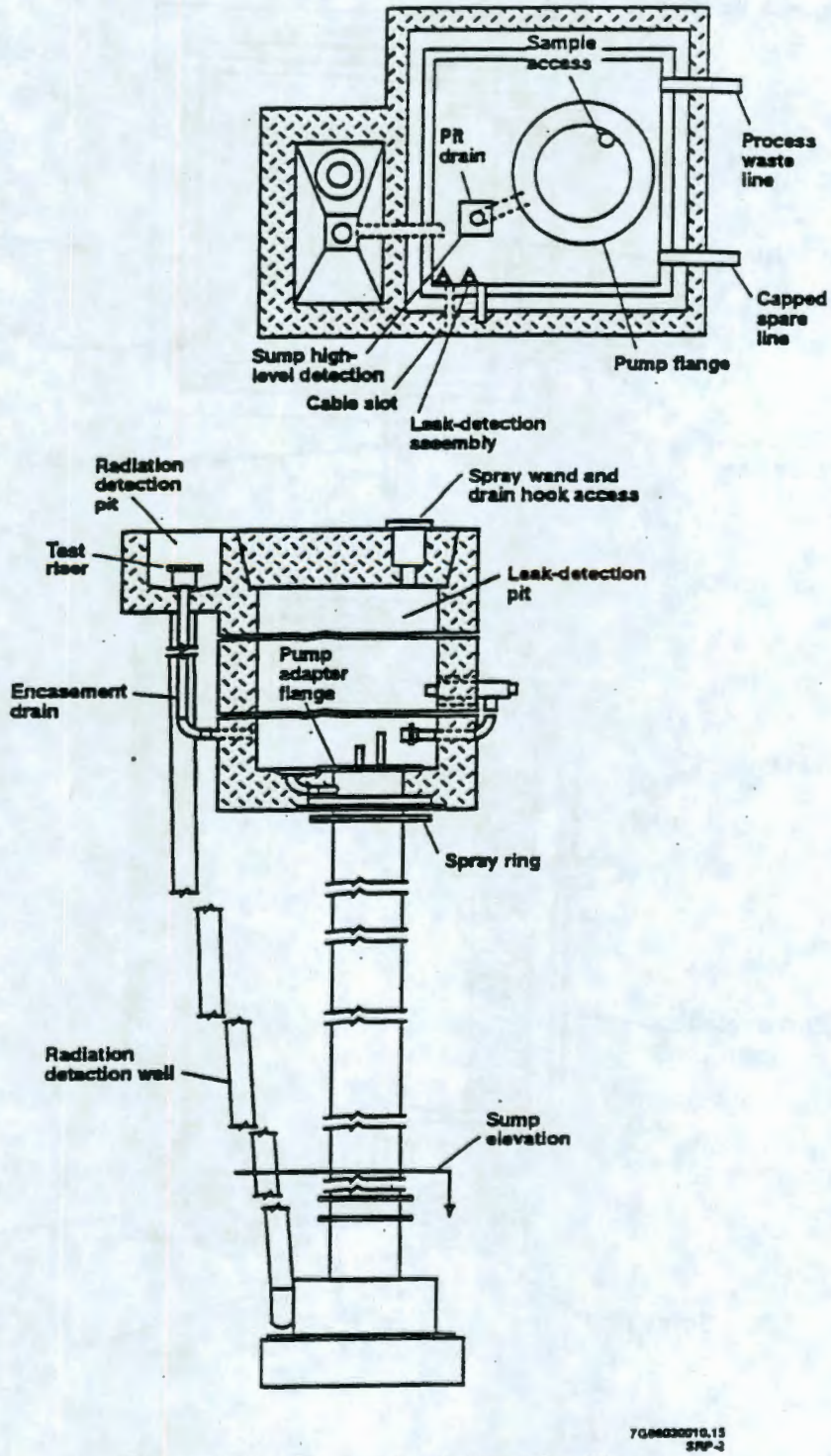

Figure 3.11. Typical Leak Detection Pit

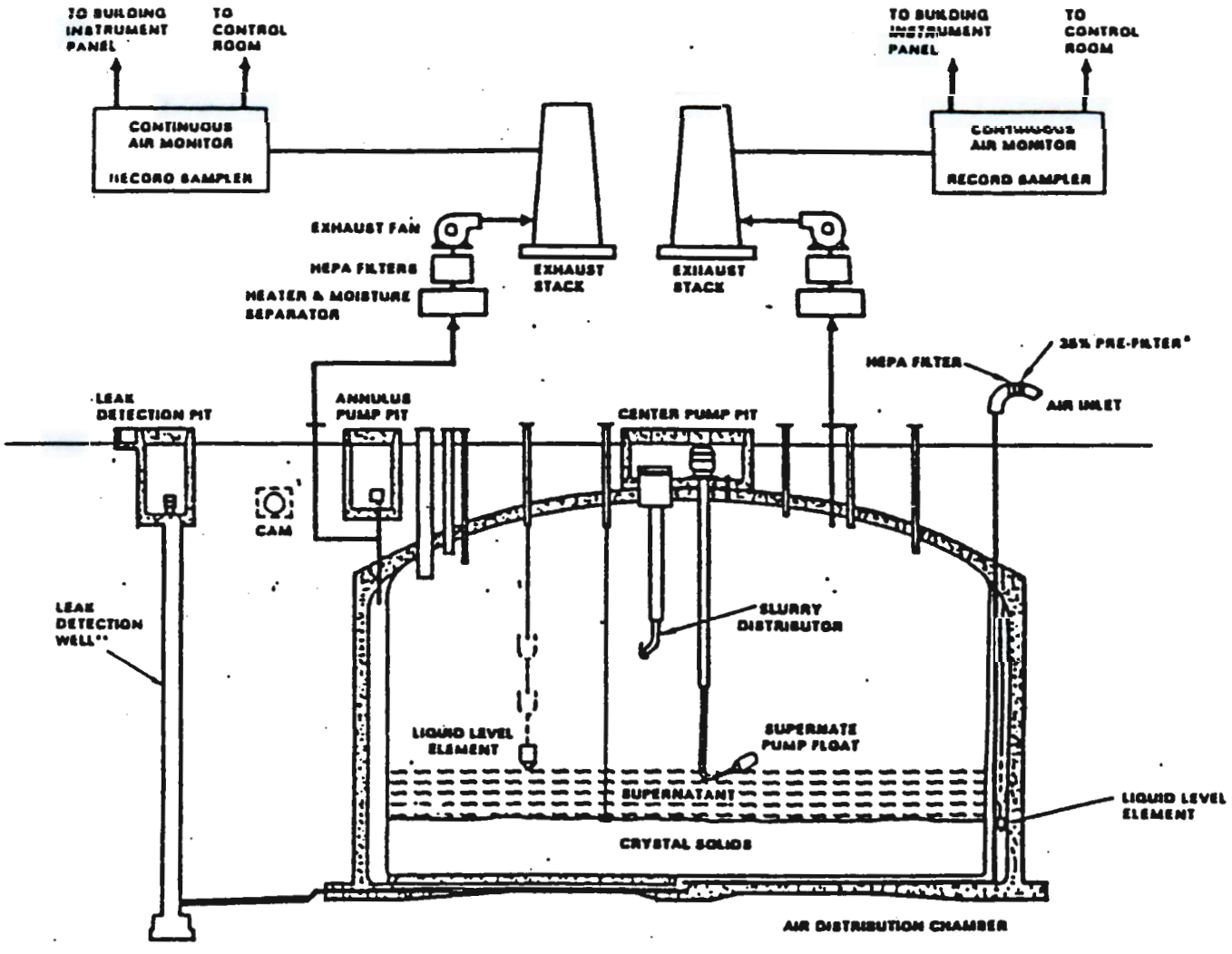

Figure 3.12. DST Ventilation Details

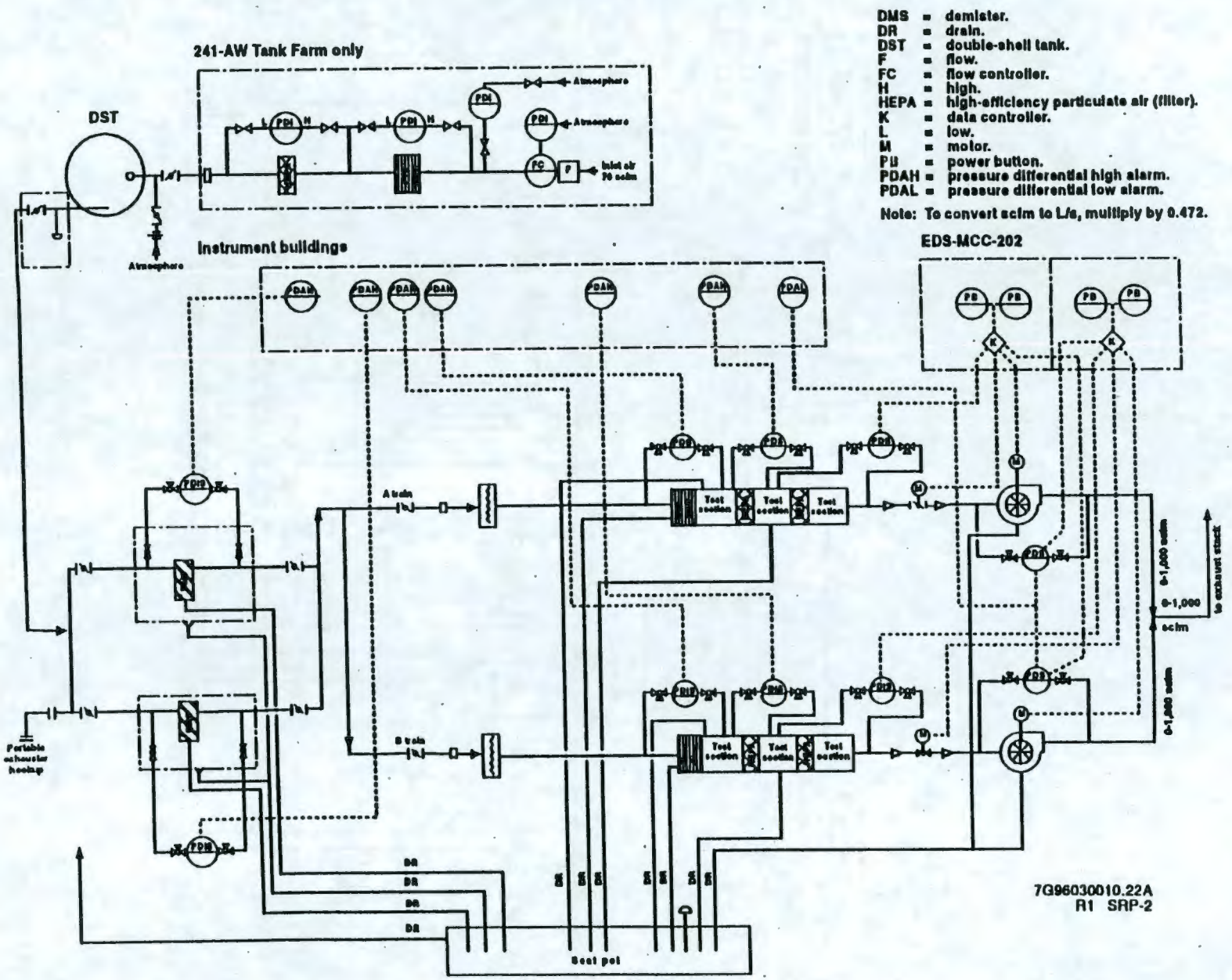

Figure 3.13. Typical Primary Tank Exhaust System

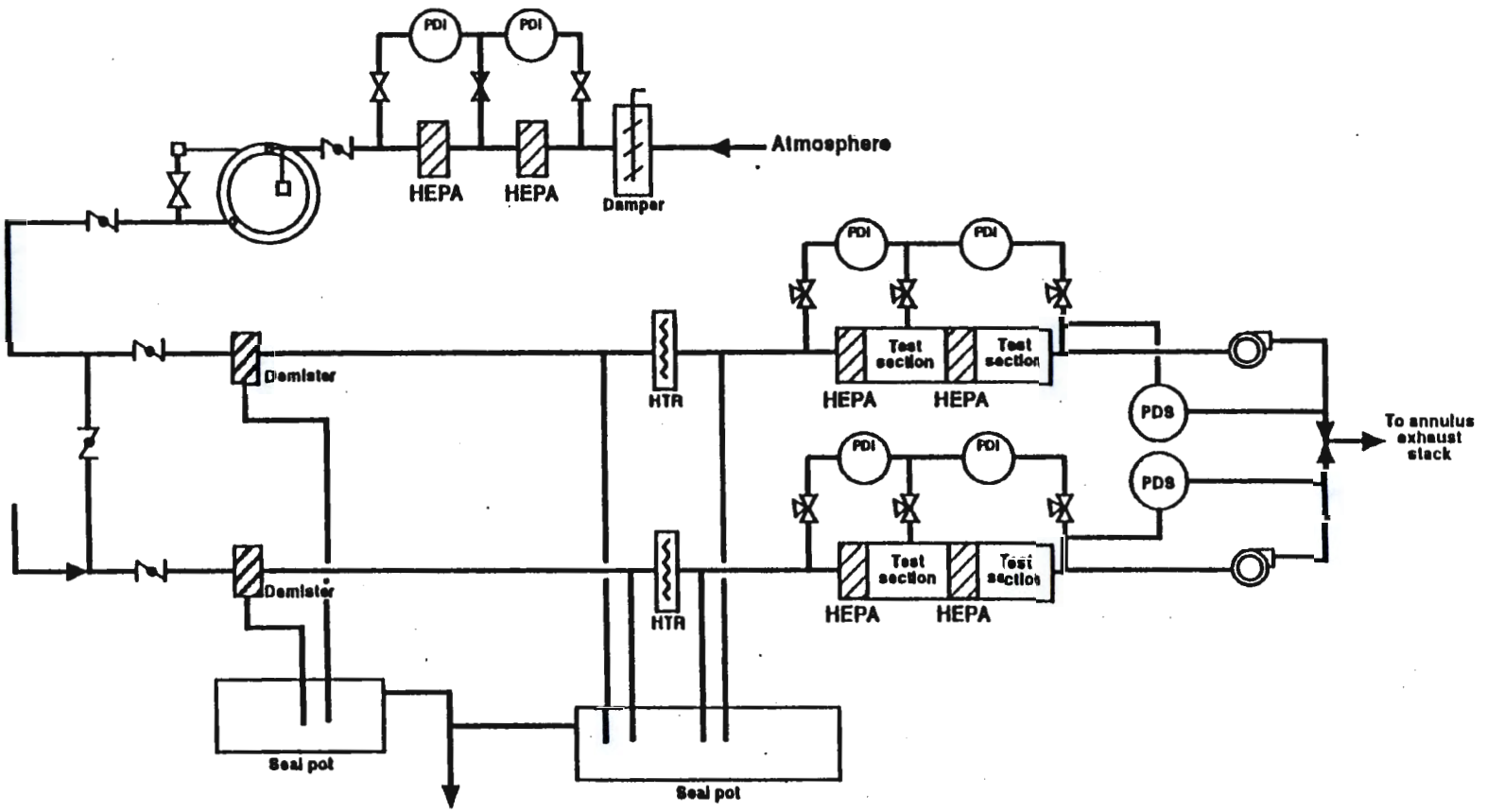

HEPA = high-efficiency particulate air (filter).
HTR = heater.
PDI = pressure differential instrument.
PDS = pressure differential switch.

7G96030010.67
R2 SRP-2

Figure 3.14. 241-AW Tank Farm Annulus Exhaust System

4.0 PRELIMINARY HAZARDS ANALYSIS

This chapter presents the identification of hazards associated with transfer of K Basin sludge into DST 241-AW-105 and storage of sludge with the material currently within the tank. This was a two-step process, including an initial exercise to identify hazards and a second activity referred to as a Preliminary Hazards Analysis (PHA). The two activities are integral to each other; the hazards identified in the first step are used to guide and ensure the comprehensiveness of the PHA. The two activities are described in separate subsections.

4.1 HAZARD IDENTIFICATION

The first activity in the hazard identification process was to identify hazards associated with the K Basin sludge materials, particularly those that might be different from the hazards associated with AW-105 wastes. Table 4.1 shows a summary comparison of important physical and chemical characteristics of K Basin sludge and the waste currently in AW-105. This comparison demonstrates that some characteristics are similar, such as TRU content, absence of a separable organic layer, total organic carbon content, and viscosity, and thus commingling the sludge and AW-105 wastes should not present unique technical or safety issues. Other characteristics are different such that K Basin sludge represents some unique hazards and some hazards would be exacerbated by adding K Basin sludge to the AW-105 tank wastes. These hazards are described below:

- **Specific gravity (SpG):** The SpG of K Basin sludge is estimated to range from about 1.5 to 2.6, primarily related to the sample locations (e.g., floor sludge has lower SpG than canister sludge), which is higher than the SpG of AW-105 solids. The waste SpG is related to the potential to generate and trap gas in the storage tank. For K Basin sludge to be accepted into DST system, the SpG must be less than 1.3 or, if greater than 1.3, the SpG of the commingled waste must be demonstrated to be below 1.41. If the commingled waste SpG is greater than 1.41, an evaluation of flammable gas generation and retention potential must be performed.

- **Particle size**: The average particle size of K Basin sludge will be larger than the AW-105 solids particle size. In addition, K Basin sludge may contain particles with diameters as large as 0.25 in. This introduces a potential criticality issue caused by preferential settling of like-sized particles, a large fraction of which may contain uranium. There are currently no particle size limits or restrictions for acceptance in tank farms, other than those that may be imposed for criticality prevention.

- **Fissile content**: Overall, the fissile content of K Basin sludge is greater than AW-105 wastes and represents a potential criticality concern. Currently, the permissible limit on fissile content for transferring waste into a DST is 0.013 g Pu-239/Pu-240 per liter and the total fissile content of AW-105 is currently limited to 25 kg Pu-239/Pu-240. The sludge contains a significant concentration of plutonium as well as fissile isotopes of uranium.

- **Uranium metal content**: K Basin sludges contain a significant fraction of unreacted uranium metal. Unreacted uranium, particularly small particles, represent a potential pyrophoric chemical reaction hazard that could lead to a runaway chemical reaction. In addition, uranium metal corrosion (i.e., oxidation) generates hydrogen gas, leading to potential

Table 4.1. K Basin Sludge and AW-105 Waste Hazard Comparison Summary Table

Property or Characteristic	As-settled K Basin Sludge	Existing AW-105 Waste	Relevant Hazard
Specific gravity (SpG)	1.5 to 2.3 (SpG at 30% solids, 70% basin water).	~ 1.2 (SpG of settled solids).	Flammable gas, mixing/settling.
Particle size	Contains "chunks" up to 0.25-in. diameter; average particle size 10 to 30 μm .	8 μm average particle size; most less than 20 μm .	Criticality (e.g., preferential settling of like-sized particles).
Fissile content	~ 7 g Pu/L	~ 0.3 g Pu/L	Sludge would be more reactive than AW-105 solids.
Uranium metal content	Present.	Not present.	Potential pyrophoric reaction involving sludge. Hydrogen gas generated when U metal corrodes.
Sand or SiO_2	High.	Low.	SiO_2 may affect heat transfer.
Nitrate, nitrite concentration	NO_3^-, 0 - 3E-5M NO_2^-, 0 - 4E-6M	NO_3^- - 0.27M NO_2^- - 0.02M	Nitrate, nitrite concentrations controlled to minimize corrosion.
Solids temperature	Not available.	63 F	Steam, vapor generation.
pH	Less than 8.	~ 13.5	U, Pu precipitation (criticality); exothermic chemical reaction.
Viscosity	< 10 mPa s	~ 1 mPa s	Transfer line plugging
Polychlorinated biphenyls	Present.	Not present.	Programmatic; potential TSCA compliance issue.
Cs and Sr content	Cs-137: ~400 μCi/mL; Sr-90: ~ 300 μCi/mL.	Cs-137 < 574 μCi/mL; Sr-90 < 404 μCi/mL.	Allowable heat load on tanks; dose rate emitted from transfer lines.
Separable organic layer	Not present.	Not present.	Exothermic chemical reaction; ion exchange/evaporator fouling.
Total organic carbon content	~ 2E+03 μg/mL (Avg.)	~4E+4 μg/mL	Exothermic chemical reaction.
Transuranic content	> 100 nCi/g	> 100 nCi/g	Both waste types to be designated TRU waste.

TSCA = Toxic Substances Control Act

flammable gas deflagration/explosion hazard. There are currently no specific uranium metal content limits for tank wastes.

- **Sand (SiO_2) content**: K Basin sludge will contain a significant amount of sand that could potentially affect the heat transfer properties of the commingled wastes. There are currently no sand or SiO_2 content limits for tank wastes.

- **Nitrate/nitrite concentration**: The nitrate and nitrite concentrations in K Basin sludge are well below the tank farm corrosion control specifications. This creates the potential for accelerating corrosion of the AW-105 tank liner, resulting in reduced lifetime and increased likelihood of tank leaks. It is likely that K Basin sludges will required sampling and adjustment to increase the nitrate/nitrite concentrations to meet the tank farm's corrosion control specification.

- **pH**: The pH of K Basin sludge is approximately neutral whereas AW-105 wastes are highly alkaline, primarily to prevent Pu-239 and Pu-240 from becoming solubilized. Consequently, the pH of the K Basin sludges will have to be adjusted prior to its transfer into AW-105.

- **Cs and Sr content**: The Cs-137 and Sr-90 content of K Basin sludge may exceed the limits specified in tank farms operating specifications that are derived from the maximum allowable heat load for a full tank. High Cs-137 and Sr-90 concentrations may also represent an external radiation hazard when K Basin sludges are within the Sludge Transportation System or being pumped through the Sludge Receiving Station. The Cs-137 and Sr-90 content of the sludge and the applicable external dose rate limitations are being considered in the designs of these systems.

- **Polychlorinated biphenyl (PCB) content**: K Basin sludge characterization activities have identified the presence of PCBs in some samples. The PCB concentrations appear to be below levels that would pose a significant health hazard. However, the presence of PCBs in the sludge creates a potential issue relative to compliance with the Toxic Substances Control Act (TSCA), including potential TSCA coverage of the final waste disposal product form of the sludge.

- **Chemical compatibility**: Chemical compatibility of K Basin sludge and AW-105 wastes must be ensured to reduce the potential for exothermic chemical reactions when the two waste materials are commingled. Mixing studies with actual K Basin sludge and AW-105 solids and supernate samples are currently underway to determine whether or not commingling these wastes would result in a chemical reaction leading to a temperature change, pH change, hydroxide consumption, precipitation, etc.

In general, the most significant unique safety issues with the K Basin sludge materials and safety issues relative to commingling the sludges with AW-105 wastes are associated with potential exothermic chemical reactions (pyrophoric and incompatible chemical reactions), flammable gas generation and retention, criticality safety (including chemical reactions that could increase reactivity and preferential settling of like-sized particles). Note that the waste compatibility and criticality safety program requirements are currently being addressed and requirements will be identified to minimize the likelihood and/or consequences of these hazards. Failure to adequately implement these

requirements could lead to a criticality or exothermic reaction event and are addressed in the hazards and accident analysis sections of this document.

The next step in the analysis was to identify hazards and hazardous conditions associated with transfer of sludge into the storage tank. This includes hazards associated with the sludge offload operations and equipment as well as hazards intrinsic to AW tank farm that could affect the offload operations or the operators conducting the transfers. This was accomplished using the Hazard Checklist presented in Table 2.1. The analysts reviewed each activity and each processing step for transferring material from a truck container into the tank for the hazards listed in the Hazard Checklist. Input to this process included the previous tank farms SARs, system description information from the tank farm FSAR now in preparation, functional design criteria for the shipping container, preliminary information from the designers of the Sludge Receiving Station, and tank farm drawings. Additional hazards information were obtained from a review of operational occurrences releated to waste transfers, documented in Appendix B, and from walk-down inspections of the AW tank farm conducted to support the TWRS BIO.

The hazard checklists for the K Basin sludge offload operations are presented in Tables 4.2 to 4.5. Table 4.2 addresses hazards during receipt and onsite transport of the sludge container within tank farms, Table 4.3 addresses connection of the container to the receiving station at tank farms, Table 4.4 addresses the sludge transfer into the tank, and Table 4.5 addresses storage operations.

A fair amount of information was obtained from this exercise and much of it was recorded in the "Example" sections of the checklists. The information recorded in the Examples section often included a brief description of potential accident scenarios that could readily be incorporated into the PHA.

4.2 PRELIMINARY HAZARDS ANALYSIS

A PHA was performed to develop a comprehensive list of potential accident scenarios that occur as a result of transferring K Basin sludge into a DST. The PHA was conducted in accordance with the methodology and format information discussed in Chapter 2. The PHA performed for this safety assessment is presented in Appendix C.

Table 4.2. Hazard Checklist for Sludge Container Receipt and Transport

ACTIVITY: *Receipt and Onsite Transport of Sludge Container to Receiving Station*

Hazard	Example(s)
Hazards Identified During Activity	
Acceleration/ deceleration	Load dislodged from truck due to truck striking object, truck rollover (loss of vehicle control, liquid sloshing, operator error, etc.)
Contamination	Receipt of externally-contaminated container. Tank farm chemical inventories may affect the truck/container and ancillaries. Operators exposed to tank farm surface contamination.
Chemical reaction	Diesel fuel, hydraulic fluid, compressor lube oil, vehicle lube oil, tank farm chemicals.
Corrosion	Container corrosion (internal) by sludge if not unloaded quickly.
Electrical	Power lines, transformers, electrical outlets in tank farm. Mixer pump in container. Air compressor (electric-driven?) Instrumentation/control system.
Explosion	Diesel fuel, lube oil. Welding operations and equipment in tank farm. Hydrogen, flammable gas generation in container.
Fire	Diesel fuel, lube oil. Welding operations and equipment in tank farm. Hydrogen, flammable gas generation in container. Hot brakes could start grass fires. Pyrophoric material (U metal) in transport container. Engine fires.
Heat and High Temperature	Solar heating of container causes overpressure or deforms/distorts seals. Welding equipment/materials. Lead slump (shielding material).
Low Temperature	Liquid freezes, expands, cracks container. Cold embrittles gaskets. Materials susceptible to brittle fracture.
Temperature change	Thermal stress (day/night temperature change) deforms seals, fatigues structural members, differential thermal expansion.

Hazard	Example(s)
Impact and Shock	Truck strikes object (pump pit, diversion box, riser, vent system equipment, etc.). Truck struck by missile (tornado/wind driven, explosion driven). Aircraft impact. Impact of radiation-embrittled container. Mishandled truck drives over/parks on tank (dome load).
Leakage/spills (gas, vapor, liquid)	Mishandling or loading error results in improper seal (overtorque, undertorque, failure to install seals). Failure to close container valves, valve failure. Vapor leak through improperly installed HEPAs on the container.
Power source/utility services failure	Address during hookup. No external power sources needed during receipt and in-farm transport.
Pressure - High	Overpressure from chemical reaction, sloshing, hot spot, gas generation. Air compressor on truck. Shipping container HEPA filter plugged.
Radiation - Ionizing	Excessive surface dose rate. External contamination. Inhalation of vapors, gases released through openings. Settled sludge increases dose rates. Tank farm (land) surface contamination. Criticality event in Sludge Transportation System.
Structural damage/failure	Container failure. Trailer/tie-down failure causes container to fall to ground, break open. See also "Impact and Shock."
Toxicity	Materials in sludge. Chemicals in pump, compressor.
Vibration and noise	Road vibration during transport loosens seals, valve, tie-down. Vibration could increase volatilization of sludge material. Activities nearby that vibrate the ground.
Weather and environment	Inclement weather (ice, snow) Lightning strike Seismic event Flood High wind and tornado Snowfall Ashfall Heavy rain, hail Brush fire Aircraft impact.

Hazard	Example(s)
Hazards NOT Identified During Activity	
Moisture - High Humidity	Moisture - Low Humidity
Pressure - Low	Radiation - Infrared
Radiation - Non-ionizing	Radiation - Ultraviolet

Table 4.3. Hazard Checklist for Connection to Sludge Receiving Station

ACTIVITY: *Connect Sludge Container to Receiving Station*

Hazard	Example(s)
Hazards Identified During Activity	
Acceleration/ deceleration	Trailer slips during hookup and breaks connection, ruptures valve or line. See also "receipt" activity.
Contamination	Residual material in valves, lines. Sand in pump oil, compressor oil. See also "receipt" activity.
Chemical reaction	Residuals in line, valves, covers. Air/oxygen contacts sludge (vapor passes through HEPA filtered vents or through opened valve). See also "receipt" activity.
Corrosion	Transfer system components exposed to high pH and chemical corrosives. Galvanic corrosion (dissimilar metal-to-metal contact such as line to truck, line to unloading station). See also "receipt" activity.
Electrical	Loss of lighting leads to improper connection. Loss of AC power leads to mixer failure, pump failure. See also "receipt" activity.
Explosion	Fuel, oil in truck and transfer equipment (pump, air compressor). Hydrogen, methane gas generated inside container. Welding in tank farms. See also "receipt" activity.
Fire	Pyrophoric material fire. Spark source for hydrogen gas generated in tank. See also "receipt" activity.
Heat and High Temperature	Same as for "receipt" activity.
Low Temperature	Freezing (plugs lines, valves).
Temperature change	Same as for "receipt" activity.
Impact and Shock	Vehicle struck by another (breaks connections). See also "receipt" activity.
Leakage, Spills	Same as for "receipt" activity.

Hazard	Example(s)
Power source/utility services failure	See also "receipt" activity.
Pressure - High	Same as for "receipt" activity.
Radiation - Ionizing	Same as for "receipt" activity.
Structural damage/failure	Same as for "receipt" activity.
Toxicity	Same as for "receipt" activity.
Vibration and noise	Same as for "receipt" activity.
Weather and environment	Same as for "receipt" activity. Events could cause connection to be broken, line rupture, spray leak.
Hazards NOT Identified During Activity	
Moisture - High Humidity Pressure - Low Radiation - Non-ionizing	Moisture - Low Humidity Radiation - Infrared Radiation - Ultraviolet

Table 4.4. Hazard Checklist for Offload Operations

ACTIVITY: *Transferring Container Contents to Tank*

Hazard	Example(s)
Hazards Identified During Activity	
Acceleration/ deceleration	Trailer slips during pumping and breaks connection, ruptures valve or line. See also "receipt" activity.
Contamination	Transfer line rupture, leak. See also "receipt" activity.
Chemical reaction	Chemical reaction occurs between sludge and tank contents (chemical incompatibility); increases temperature and pressure in tank. Residuals in lines, valves, etc., react and produce heat and pressure. Mistransfers. See also "receipt" activity.
Corrosion	Sludge enhances corrosion of transfer line. See also "receipt" activity.
Electrical	Electric-driven pump, control systems. See also "receipt" activity.
Explosion	Chemical incompatibilities (sludge, tank contents). Mistransfers. Flammable gas generation. See also "receipt" activity.
Fire	AW-101 is nearby flammable gas tank; connected on common header to AW-105. Mistransfers. Pyrophoric chemical reaction (U metal). See also "receipt" activity.
Heat and High Temperature	Solar radiation embrittles lines, overheats shipping container.
Low Temperature	Freezing conditions could freeze (plug) lines, valves, etc.
Temperature change	Same as for "receipt" activity.
Impact and Shock	Fatigue failure of transfer line, connections. Trailer struck by moving vehicle.
Leakage	Transfer line rupture. Valve rupture.

Hazard	Example(s)
Power source/utility services failure	Instrument failure (tank level, shipping container level, pump flow, etc.) Loss of lighting. Loss of mixing in shipping container. Failure of sludge distribution system in tank.
Pressure - High	Pump pressure (normal). Pump dead-heads against closed/plugged valve. Chemical incompatibility causes tank to pressurize.
Pressure - Low	Rapid overcooling of tank vapor.
Radiation - Ionizing	Exposures to leakage through connectors, ruptured lines and valves. Radiation embrittlement of receiving station components. Sludge with excessive dose rate (e.g., fuel "fleas"). See also "receipt" activity.
Structural damage/failure	Same as for "receipt" activity.
Toxicity	Same as for "receipt" activity.
Vibration and noise	Same as for "receipt" activity.
Weather and environment	Same as for "receipt" activity.
Hazards NOT Identified During Activity	
Moisture - High Humidity Radiation - Infrared Radiation - Ultraviolet	Moisture - Low Humidity Radiation - Non-ionizing

Table 4.5. Hazard Checklist for Storage of K Basin Sludge in a DST

ACTIVITY: *Storage*

Hazard	Example(s)
Hazards Identified During Activity	
Acceleration/ deceleration	Fluid (sludge or supernate) splashes. Damage to or pipe dislodges from sludge distributor. Waste additions causes gas release by disturbing sludge layer in tank (gas pocket); high rad, chemical reaction.
Contamination	Inadequate flush of container; residual contamination in container. Same as hazards during "receipt" activity.
Chemical reaction	Incompatible waste. Mistransfer (wrong receiver tank). Pyrophoric reaction. Transfer waste not in compliance with acceptance specifications (chemical reaction, fire, explosion). Inadequate flush of container leads to mixing incompatible chemicals.
Corrosion	Sludge accelerates corrosion of tank liner, tank internal equipment.
Electrical	Spark source. HVAC system. Communications system. Instrumentation, controls, alarms. Lighting system.
Explosion	Incompatible waste. Hydrogen gas exhausted from tank (continuous and episodic). Pyrophoric, organic materials in sludge. AW-101 is flammable gas tank.
Fire	Electrical instrumentation in tanks are spark source; could ignite flammable vapors. Sludge dries out in tank (leads to U metal reaction). Welding in vicinity of tank. External fire ignites flammable gas. Pyrophoric and organic material in sludge.
Heat and High Temperature	Sludge is heat source. Tank bump. Differential thermal expansion (basin sludge strikes tank surfaces). Incompatible sludge temp. causes chemical reaction. Hot spots in sludge.
Low Temperature	Relatively cold sludge strikes warmer tank sludge; increases vaporization.

Hazard	Example(s)
Temperature change	Same as hazards during "receipt" activity.
Impact and Shock	Foreign object in Basin sludge strikes tank wall or internal equipment.
Leakage	Tank failure causes leakage to soil. Aerosol leakage (failed HEPAs, failed/leaking HVAC duct or other barrier)
Moisture - High humidity	Increasing water content of tank affects vaporization rate, tank pressure. Contributes to instrument failure. Enhanced corrosion.
Power source/utility services failure	Loss of HVAC, instrumentation, controls, alarms. See also "electrical"
Pressure - High	Basin sludge/tank sludge temperature differences; flashes to steam. Gas/air pockets in sludge released. Chemical reaction (incompatibility). Pump increases tank pressure.
Pressure - Low	HVAC inlets to tank plug, exhaust fans continue running. Rapid overcooling of tank vapor.
Radiation - Ionizing	Sludge in tank. Vapors in HVAC system. External exposure rates. Criticality event in storage tank. Radiation embrittlement.
Structural damage/failure	Hazards to tank structures include overpressurization, chemical reaction/corrosion, tank bump, criticality, etc. Tank structure failure. HVAC component failure.
Toxicity	Toxic materials in sludge, vapors.
Vibration and noise	Nearby workers operating heavy equipment, machinery.
Weather and environment	Same as hazards identified in "receipt" activity.
Hazards NOT Identified During Activity	
Moisture - High Humidity Radiation - Infrared Radiation - Ultraviolet	Moisture - Low Humidity Radiation - Non-ionizing

5.0 EXTRINSIC HAZARDS AND NATURAL PHENOMENA

This chapter presents a preliminary assessment of the frequencies and consequences of natural phenomena hazards relative to K Basin sludge offloading and storage activities. Extrinsic hazards addressed here include aircraft and vehicular accidents. Natural phenomena hazards include seismic events, tornadoes, ashfall, high winds, floods, lightning, and snowfall. The information in this chapter forms the basis for selection of appropriate extrinsic hazards and natural phenomena for detailed evaluation.

5.1 PRELIMINARY ASSESSMENT OF EXTRINSIC HAZARDS

Because of its relatively rigid construction, location, and low profile, the AW tank farm and specifically tank 241-AW-105, are not likely to be damaged by extrinsic hazards such as falling aircraft and out-of-control vehicles. Because the tank farms are located within the 200 Areas and access is restricted, truck, auto, railroad traffic, and vehicular accidents are not likely to present a significant hazard to the facility. Vehicular accidents outside the tank farm involving the sludge shipping container are addressed by its SARP (to be prepared). The probability of airplanes crashing into the tank was assessed using the methods and data in Nuclear regulatory Commission (NRC) (1981) to determine if this type of accident poses a significant hazard.

5.1.1 Aircraft Impact from Richland Airport

The Richland Airport is located approximately 32 km (20 mi) to the southeast of the AW tank farm. It is classified as a general utility airport. The activities include recreational flying, pilot training, charter flights, air taxis, and some business flying. The airport is no longer used for air commuter traffic, and the normal airport traffic is for planes weighing less than 5670 kg (12,500 lb). The present level of aircraft activity is approximately 36,000 takeoffs and landings per year.

The probabilities for aircraft crashes near airfields (see Table 5.1) were extrapolated to airport distances out to 32 km (20 mi.) from the AW farm. Based on this extrapolation, the general aviation crash probability at 20 miles from the airport runway was estimated to be less than 1E-09 fatal crashes per square mile per aircraft movement. Similarly, the commercial aircraft crash probability was estimated to be less than 5E-10 fatal crashes per square mile per aircraft movement. The larger value was also used as a conservative approximation of U.S. Air Force aircraft crash probabilities at 20 mi. from an airport.

Based on a value of 1E-09/mi^2 per aircraft movement for general aviation aircraft and an overall target area of 1.2E+05 ft^2 (4.3E-03 mi^2), representing the entire area of the AW farm to account for skid area around tank AW-105 and potential damage to the HVAC system, the frequency (F) of aircraft associated with the Richland airport crashing into the AW tank farm is estimated to be

$$F = 1E\text{-}09/mi^2 \times 4.3E\text{-}03\ mi^2 \times 3.6E{+}04\ \text{takeoffs/landings/yr}$$
$$= 1.5E\text{-}07/yr$$

Table 5.1. Probability of an Aircraft Crash (NRC 1981)

Distance from End of Runway		Fatal Crash Probability (x 1E-08) per 2.56 km² (1 mi²) per Aircraft Movement		
km	mi	U.S. Air Carrier	General Aviation	U.S. Air Force
0.0 - 1.6	0 - 1	16.7	84	5.7
1.6 - 3.2	1 - 2	4.0	15	2.3
3.2 - 4.8	2 - 3	0.96	6.2	1.1
4.8 - 6.4	3 - 4	0.68	3.8	0.42
6.4 - 8.0	4 - 5	0.27	1.2	0.40
8.0 - 9.6	5 - 6	0.0	NA[a]	NA
9.6 - 11.2	6 - 7	0.0	NA	NA
11.2 - 12.8	7 - 8	0.0	NA	NA
12.8 - 14.4	8 - 9	0.14	NA	NA
14.4 - 16.0	9 - 10	0.12	NA	NA

(a) NA = Information not available for this distance.

5.1.2 Aircraft Impact from Tri-Cities Airport

The Tri-Cities Airport at Pasco, Washington, is the main airport in the area for commercial air carriers. It is operated under the direction of the Port of Pasco and is approximately 48 km (30 mi) to the southeast of the AW tank farm. Activities include commercial air carrier (2610 takeoffs and landings), air taxi (33,115), recreational (51,125), and military (1214), for a total of 88,064 take-offs and landings during calendar year 1989. Of these, the commercial and military air carriers (3824) were larger aircraft while the remainder, in general, weighed less than 5620 kg (12,500 lb).

Based on the probabilities of aircraft accidents involving various types of aircraft presented in Section 5.1.1, an overall target area of 4.3E-03 mi², and the airport activities listed above, the frequency of aircraft from the Tri-Cities Airport hitting the AW tank farm is:

$$F = 4.3E\text{-}03\ mi^2\ [(1E\text{-}09)(8.4E{+}04) + (5E\text{-}10)(2610) + (1E\text{-}09)(1214)]$$
$$= 3.7E\text{-}07 \text{ per year}$$

The aircraft crash probabilities are conservative approximations as they were based on airport distances of 20 mi., not the 30 mi. actual distance to the Tri-Cities Airport.

The total aircraft hazard frequency is the sum of the frequencies of the aircraft crashes associated with the Richland and Tri-Cities airports. The total hazard frequency is therefore 5.2E-07 aircraft crashes per year. Therefore, aircraft accident frequencies are considered to be beyond extremely unlikely and will not be analyzed in detail. Furthermore, should an aircraft crash into the AW tank farm, only large aircraft possess enough mass and a large enough fuel loading to cause significant damage to a tank structure. The probability of such a crash is only a small fraction of the total aircraft hazard probability calculated above because only a small fraction of the aircraft takeoffs

and landings involve heavy aircraft. Small aircraft, which are by far the most prevalent, were not considered a threat to tank structures. However, they may damage the ventilation system and thus contribute to the frequencies of ventilation system failures and upset conditions.

5.2 PRELIMINARY ASSESSMENT OF NATURAL PHENOMENA HAZARDS

The natural phenomena identified as having potentially significant impacts include 1) flood, 2) structural damage from high winds, 3) earthquake, 4) volcanic activity, 5) tornadoes, and 6) lightning. The preliminary assessments in the following section are intended to determine which natural phenomena hazards the tank farms are most vulnerable to and which are most likely to result in a significant release. Care is also taken to ensure that natural phenomena hazards are considered as potential initiating events that could lead to releases from the tank or receiving station equipment as well as contributors to other initiating events (such as lightning strikes contributing to flammable gas explosions or fires).

5.2.1 Flood

Flood conditions have been previously examined for the Hanford Sites 200 Areas in reference to the construction of many facilities, including tank farms, fuel processing facilities, and the proposed geologic repository for the permanent disposal of commercial spent nuclear fuel and high-level radioactive waste.

The largest recorded flood on the Columbia River in recent history occurred on June 7, 1894. The recorded discharge was 21,200 m^3/s (750,000 ft^3/s). The more recent flood of 1948 had a peak flow rate at the Hanford Site of 19,500 m^3/s (690,000 ft^3/s). The 1894 flood is considered to be an unregulated flood, whereas the 1948 flood was considered to be partially controlled as a result of the construction of Grand Coulee dam in 1942. Although the primary purpose for the dams above the Hanford Site is for generating hydroelectric power, these dams can reduce major flood flows at the site by between 19% and 43%.

The largest flood recorded on the Yakima River in recent history was on December 23, 1933, when the peak discharge approximated 1,900 m^3/s (67,000 ft^3/s). This river is generally unregulated, and a flood of this magnitude can be expected every 170 yr (WPPSS 1981). Although it is possible that a flood of this magnitude would impact the southern end of the Hanford Site, the facilities on the site, particularly the 200 Area, would not be affected.

The Cold Creek watershed, which includes Dry Creek, is ephemeral and discontinuous. The only flow in this creek and its tributary is from precipitation events. Water in these creek beds infiltrates the sediment layer quickly. The probable maximum flood is estimated to reach the southwestern portion of the 200 West Area but not the 200 East Area. Although portions of the AW tank farm reside in the vicinity of the drainage basin boundary, no flooding is anticipated from this scenario.

Results of analyses that investigate maximum Columbia River, Yakima River, and Cold Creek Drainage floods of historical record as well as probable maximum floods in these waterways, show no evidence of flooding on the 200 Area plateau. One additional analysis investigates an instantaneous, catastrophic destruction of 25% to 50% of the center section of Grand Coulee Dam. This destruction scenario for Grand Coulee Dam is from a hypothetical nuclear attack and is not projected to occur

from any known natural event. It would result in a brief duration maximum flow of 227,000 m^3/s (8,000,000 ft^3/s) and flood elevations of 143 to 148 m (469 to 486 ft) in the 100 Areas. The 100 and 300 Areas as well as downstream cities along the Columbia River would be flooded. However, the 200 Area plateau would not be affected.

Major drainage areas affecting the AW tank farm in the 200 East Area are associated with the Cold Creek Drainage and Dry Creek tributary. These are ephemeral creeks and the AW tank farm approaches only the edge of the defined drainage, which is located above the probable maximum flood profile. Therefore, based on the location of the AW tank farm (on the 200 Area plateau) and its location away from major drainage areas, floods from external causes are considered to be incredible and were not addressed further. Internally-initiated floods will still be addressed.

5.2.2 Wind

The design basis wind for Performance Category 3, new high-hazard, non-reactor nuclear facilities in the 200 Area has a fastest-mile wind speed of 130 km/hr (80 mph). For existing facilities, the fastest-mile wind speed is 113 km/hr (70 mph). This windstorm has an annual frequency of 2E-04/yr, or 1 in 5000 years. For new and existing Performance Category 2 non-nuclear non-reactor facilities, the design basis fastest-mile speeds are 113 km/hr (70 mph) and 97 km/hr (60 mph), respectively. This windstorm has an annual frequency of 1E-03/yr or one in 1000 years. This places these events into the Unlikely frequency category. Preliminary analyses of the effects of the design basis wind loading indicate that the tank farm structures can withstand both windblown missiles (required for PC-3 facilities only) and the pressures imposed on the upwind side. The tank liners and dome, because they are covered with a layer of overburden, are not vulnerable to either wind-driven missiles or air pressure impingement.

The tank containment boundaries, because of their structural strength and protection provided by the overburden, are not expected to suffer significant damage from high wind events. Flying debris would also be unable to damage the below-grade containment structures. Other breaches of the containment boundaries might result from windblown missiles penetrating exterior aboveground structures, such as ventilation system components. However, these components are protected by steel building structures around them and only extremely severe wind events would have the capability to project a missile through the building and damage a vital component.

The sludge container will provide protection from wind-driven missiles and air impingement due to its design requirements to meet onsite packaging requirements for Type B highway-route-controlled quantities of radioactive material. Packaging standards define a series of accident conditions which the Sludge Transportation System must be capable of withstanding without appreciable releases. The accident conditions include impact, puncture, fire, and crush. The forces on the sludge transport container that might be applied by wind and missile loadings were estimated to be less severe than the onsite packaging design criteria and thus the consequences of applying design-basis wind and missile loadings to the sludge container would not cause a release.

The Sludge Receiving Station at AW-105 is more vulnerable to wind and missile loadings than the Sludge Transportation System because certain components, such as the flexible hose that connects the container to the receiving station, were estimated not to be capable of withstanding missile impacts. However, the frequency of such an accident would require the simultaneous occurrence of a severe windstorm and the transfer operation and thus the frequency would be only a small fraction of

the severe windstorm probability. Furthermore, offloading operations during a severe windstorm are most likely to be precluded by tank farm operating procedures. This means that operators would have to violate a procedure and conduct a transfer during a severe windstorm, leading to an even smaller frequency. For these reasons, the estimated frequency of a breached receiving station caused by severe wind or missile damage was considered to be below extremely unlikely and will not be evaluated further.

5.2.3 Earthquake

Kennedy et al. (1990) recommends design-basis seismic events for high-hazard facilities be based on an annual exceedence probability of 2E-04/yr and for PC-2 non-reactor nuclear facilities, the recommended recurrence frequency is 1E-03/yr. Seismic hazard curves for the Hanford Site (Coats and Murray 1984 and Tallman 1989) show the relationship between the recurrence frequency and the peak horizontal ground acceleration expected at that frequency. For the 200 East Area, the design-basis peak horizontal ground acceleration for a PC-3 non-reactor nuclear facility is 0.26 g (new facility) and 0.19 g (existing facility) and for a PC-2 non-reactor nuclear facility would be 0.20 g (new) and 0.13 g (existing).

Damage estimate for these events are difficult to predict with accuracy so a qualitative discussion of potential damage at the two ground acceleration levels was developed. If merited, more detailed, quantitative damage estimates will be developed in subsequent stages of this project.

Damage to tank structures is not expected for 0.12 g and 0.2 g ground acceleration levels. According to the *Double-Shell Tank Farm Safety Analysis Report*, WHC-SD-WM-SAR-016, the tanks are designed to withstand up to 0.25 g horizontal ground acceleration, which exceeds both the PC-3 and PC-2 facility seismic requirements for existing facilities. Therefore, it is extremely unlikely that a seismic event could result in a large release of solids from the tank.

Damage to tank support systems, such as ventilation systems, may occur at less severe seismic intensities than 0.25 g. The precise seismic intensity at which damage is expected to occur is not well known so it was assumed here that a breach in the ventilation system could occur at 0.12 g horizontal acceleration. Such an event was assigned as unlikely frequency as the exceedence frequency was shown above to be 1E-03/yr (but assumed to be below 1E-02/yr) for this magnitude of earthquake. Therefore, seismic events will be retained as potential contributors to HVAC system failures.

A seismic event could also lead to loss of electric power to the tank farm. Loss of electric power was explicitly considered in the PHA and seismic events will be considered as contributors to the frequency of loss of electric power.

A seismic event that occurs simultaneously with a sludge transfer in progress places the shipping container and Receiving Station at risk. Damage to the shipping container could be caused by the container falling to the ground or by objects falling on the container. Due to the impact and structural resistance designed into the container, such events would not threaten its integrity. However, portions of the transportation system and Receiving Station, particularly the flexible hose and connections, would be vulnerable to horizontal loads. For example, a seismic event could shake the trailer sufficiently to break a connection or could cause the trailer to move and rupture the flexible pipe. Both scenarios would lead to a spray release or leak from the ruptured component. This could occur at the PC-2 facility seismic loading conditions (0.20 g) and so could be assigned to the unlikely

frequency category. However, the scenarios require the receiving operation and seismic event to occur simultaneously and so the frequency would be lower than the 1E-03/yr exceedence frequency used to select the 0.20 g loading. In any event, seismic events will be considered further as potential causes of breaks or ruptures in the transportation system and receiving station.

5.2.4 Volcanic Activity

Important ashfalls are the eruptions 12,000 years before present of Glacier Peak, Washington; the eruption 3600 years before present of Mt. St. Helens; and the eruption 6000 years before present of Mt. Mazama. The most recent Mt. St. Helens' ashfall of May 18, 1980, resulted in the ejection of approximately 0.8 km^3 (0.2 mi^3) of ash from a crater volume of 2.5 km^3 (0.6 mi^3). The remaining 1.6 km^3 (0.4 mi^3) of material was contained in the avalanche debris, mud flows, and proximal blast deposits. Table 5.2 indicates the estimated depth of ash deposited at the Hanford Site from these eruptions. The depths of ash were determined by different geological studies made during excavations in the Hanford area.

Volcanic ashfall could have two principal effects: increased structural loading of components or increased plugging potential of the HEPA filters. Plugging of the final HEPA filters would be prevented, or at least minimized, by the continuous airflow through the filter housing and out the stack. This would prevent the ash from building up and blocking the airflow. Plugging of the final filter would stop ventilation system airflow, resulting in loss of air balance and potential blowback through the inlet supply system. Plugging of the ventilation supply system would also result in interruption of the air balance and could also create low-pressure conditions in the tank vapor space, and increase airborne releases, if the exhaust fans continue running. If this pressure reduction continues for a long period of time, it could contribute to dome failure. However, a long period of undetected low pressure would need to occur, which is considered incredible given the diversity and reliability of the tank pressure monitoring instrumentation. Therefore, no credible mechanisms involving volcanic ashfall were identified in which significant quantities of supernate or sludge material could be released from the tank. Therefore, the consequences would most likely be small.

Since the major eruption of Mt. St. Helens on May 18, 1980, five more eruptions have been of sufficient size to distribute ash at significant distances downwind. The largest eruption (May 18, 1980) is the only one to have deposited ash at the Hanford Site. The Hanford Site in this case was on the edge of the main ash plume. If the ash cloud had been centered within the Hanford Site, the ash thickness would have been on the order of 2.5 to 5.1 cm (1 to 2 in.).

If the ashfall were severe enough at the tank farms to plug the intake filters, normal operations would be curtailed and the facility would be evacuated. A crew to oversee facility status might be left within if deemed necessary (i.e., for filter change out and unloading ash from the roof areas). An attempt would be made to change intake filters and continue to operate the intake fans, but, if this became infeasible, the backflow damper on the intake side would be closed. With the exhaust fans still running, this would result in an air imbalance within the tank but would maintain the tank at negative pressure with respect to atmospheric pressure. For this condition, no radioactivity would be released to the environment unless the pressure drop in the tank were severe enough to cause a dome failure event. This potential cause of dome failure was considered to be less than extremely unlikely because the pressure would not change rapidly (due to less-than-perfect penetration seals), filter plugging would most likely not occur instantaneously, and the pressure would tend to equalize itself over time after the fans are stopped. In addition, tank pressure is continuously monitored to ensure

Table 5.2. Estimated Ash Depth at the Hanford Site from Major Eruptions

Volcano	Time	Ash Fall Volume		Depth of Ash at Hanford, cm (in.)
		km^3	$mi.^3$	
Glacier Peak	12,000 BP[a]	4	1	2.5 (> 1.0), compacted
Mt. Mazama (Crater Lake)	6,000 BP	62	15	10.2 to 15.2 (4 to 6), compacted
Mt. St. Helens	3,600 BP	4	1	2.5 (1.0), compacted
Mt. St. Helens	1980	0.8	0.2	1.73 (0.7), settled

(a) BP = Before present

the appropriate air balances are maintained so operators would most likely have information available to appropriately deal with this situation.

The roof loading for maximum ash for PC-3 (wet compacted) is 7.4 g/cm^2 (15.0 psf), which is within the roof loading design criteria of the UBC. Therefore, it was judged that the possibility that either damage to the facility or loss of confinement would occur is below extremely unlikely and these scenarios will not be evaluated further.

5.2.5 Tornadoes

Tornadoes are rare at Hanford, tending to be small with only minor damage potential. Only 24 tornadoes have been reported within 160 km (100 mi) of Hanford since 1916 (DOE 1987). The DOE (1987) estimates an annual probability of ~3E-06 for extreme winds approaching 160 km/h (100 mi/h) associated with a tornado. Therefore, there are no requirements to address tornados or tornado generated missiles. (DOE-STD-1020-94). Hanford Site design basis tornado for Nonreactor Safety Class 1 facilities consists of a maximum horizontal wind speed of 160 km/h (100 mi/h), pressure drop of 960 nt/m^2 (20 lb/ft^2), and rate of pressure change of 340 nt/m^2-s (7 lb/ft^2-s) (KEH 1989).

The effects of tornado loadings on the tank farms would include erosion, missile generation, and the large atmospheric pressure change. Erosion of the soil overburden on the tanks would occur with tornado passage. The effects could include increased exposure rates from buried transfer lines and HVAC components, and the tanks themselves. However, the effects would be easily-detected as a result of damage assessments performed following tornado passage. If undetected during the damage assessment, routine monitoring/surveillance activities or pre-transfer radiation monitoring would detect increased radiation levels and halt operations. In any event, the effects would be small increases in occupational exposures and insignificant effects to offsite receptors.

Tornadoes produce missiles that could damage tank farm components. The most important components, from a radioactive material containment perspective, would be the tank liners. Since these are buried beneath a soil overburden layer, they would not be vulnerable to tornado-borne missiles. However, components on the surface, including portions of the ventilation system would be vulnerable to missile damage. Damage to ventilation system components could open a release pathway to the environment. However, the release would consist primarily of vapors and gases released from the tank headspace which contain less radioactive material than the sludge and supernate layers in the tanks which would be undisturbed by failure of the ventilation system. Therefore, the consequences would be limited to minor exposures to workers and onsite personnel and insignificant exposures offsite.

Damage to the shipping container and receiving station due to tornado-driven missiles would be much the same as from wind-driven missiles discussed in Section 5.2.2.

The third potential effect of tornadoes would be the large pressure change associated with the passing storm. This pressure change could cause failure of the HEPA filters in the AW ventilation system and subsequent unfiltered release of radioactive materials from the tank. The consequences were estimated to be relatively high for onsite personnel and could also have a significant effect on offsite receptors due to the possibility that entrained particles could be released from the damaged filter media. This event will be considered further in the analysis, at minimum, as a potential initiating event for HEPA filter failures in the AW farm ventilation system.

5.2.6 Lightning

Lightning strikes are considered as potential spark sources for flammable materials in the tanks, which could lead to fires and explosions involving tank contents. No other credible damage mechanisms have been postulated, including the potential to breach containment barriers.

Lightning poses a potential threat to the wastes as it introduces an opportunity to apply a large electrical current directly to potentially chemically-reactive waste materials or a spark to flammable atmospheres. It was assumed that lightning must strike a riser or directly enter the riser in order for the electrical energy to be applied to the waste in the tank. Strikes in other areas above the tanks would not affect the wastes for several reasons, as described below:

- A lightning strike to the ground surface could potentially penetrate the soil overburden above the tank. However, the soil provides substantial protection against lightning strikes.

- The concrete and reinforced steel protects the tank internals against lightning through a skin effect that directs the current around the structure, representing a partial "Faraday Cage".

Recent research sponsored by DOE on mitigation of natural phenomena hazards has led to a better focus of the issues surrounding lightning at the tank farms (Zach 1996). For a deflagration or fire to occur as a result of lightning, all of the following must be satisfied:

(1) Lightning must strike a tank riser, appurtenance, or the ground in the immediate vicinity of a tank,

(2) At the time of the strike, the tank must contain a flammable gas above the Lower Flammability Limit (LFL) or organic materials in sufficient concentration to support combustion,

(3) The discharge must pass from the riser or appurtenance into the tank via conduction paths such as instrumentation lines or other equipment connected to the tank riser,

(4) The discharge must be of sufficient energy to create an arc or cause high enough temperatures from ohmic heating to ignite the materials.

Analyses of these factors as discussed below result in a determination that a lightning-initiated organic-nitrate fire is extremely unlikely. Lightning-initiated organic-solvent fires and flammable gas deflagrations are unlikely (LMHC 1997).

A number of studies have been performed to assess the likelihood of lightning striking the ground or facilities at the Hanford site. Calculated values based on world-wide lightning strike distributions as a function of latitude appear to overpredict the rate of lightning strikes for the Hanford site. Depending on the method, calculations predict as many as 3.8 strikes/year/km^2 to as few as 0.3 strikes/year/km^2 at the Hanford site. These calculated values are much greater than the frequency observed by the National Lightning Detection Network and the Bureau of Land Management in the region around the tank farms for the 10 years ending in January 1996. After accounting for detection frequency and uncertainties, the observed rate was determined to be 0.06 strikes/yr/km^2 (Zach 1996). This value is consistent with, but slightly higher, than the lightning strike frequency calculated by the National Lightning Safety Institute (NLSI 1996) for the Hanford Site, and more specifically, for the 200 East and 200 West Areas.

Using the observed 0.06 strikes/yr/km^2 as a best estimate of lightning strike frequency, and considering the cross-sectional area of a large DST to be bounded by 410 m^2 (4.1E-04 km^2; based on tank diameter of 22.9 m), the likelihood of a direct strike over a particular tank is 2.5E-05 strikes per yr. For such applications, the value may be conservative because:

- the average strike frequency in the tank farms is less than 0.06 strikes/yr/km^2 because the study area included higher elevations in the region such as Rattlesnake Hills.
- it is assumed that a strike anywhere over a tank will hit a riser, and there are no other nearby preferential paths (light poles, etc),
- the equivalent target area of the immediate zone around the risers of typical tanks is about 40 m^2 or one tenth the tank area. Strikes outside the 40 m^2 may dissipate without causing an ignition (particularly ignition of organic materials).

Based on information in Zach (1996) and NLSI (1996), it is likely that the tank structures would provide protection to the waste from lightning that strikes a riser. The tank structure forms a "partial Faraday shield" that would direct current around and away from the waste in the tank. The ignition likelihood given a strike is most likely conservative because: (1) experience data show lightning strikes at the Hanford site average only about 30,000 amps (Zach 1996), (2) the tank must have a geometry favorable to arcing in or near the waste surface, and (3) most energy would preferentially dissipate through the comparatively conductive concrete and rebar. Based on this

assessment, the frequency of lightning-initiated chemical reactions in AW-105 was assigned to the Extremely Unlikely frequency category. It will be examined further in the accident scenario selection process described in Chapter 7.

5.2.7 Snow Loading

Snow loads could possibily damage equipment and system due to the application of excessive weight. The design basis snow loads for tank farm facilities are roof loads of 20 lb/ft^2 and ground loads of 15 lb/ft^2 (DOE 1994). These testing conditions are far less severe than the 16,000 minimum compressive load failure threshold for Hanford's onsite packaging systems (Rhyne 1996). This demonstrates that the sludge transportation package will be designed to withstand far more severe loading conditions than the design basis snow load. The receiving station will be designed to these criteria and so failure under these loads would be prevented. Consequently, failures of the K Basin sludge transportation system and receiving station due to snow loading were judged to be less than Extremely Unlikely and were not considered further in this analysis.

5.2.8 External Fires

The Hanford tank farm area has been subject to range fires in the past. Range fires may cause damage to the sludge shipping container, offload system, or tank farm equipment such as HEPA filters. It is estimated that the likelihood that range fires affect the K Basin sludge offload process is low because it would require simultaneous occurrence of the range fire and a sludge offload operation. Current emergency procedures for response to range fires would prohibit transfers from taking place when threatened by a range fire. The likelihood of damaging an important part of the offload system or tank component is further reduced by the presence and capabilities of the Hanford Fire Department, which can respond to the tank farms within several minutes. Furthermore, existing procedures require removal of combustible material (e.g., tumbleweeds) from the tank farm to prevent fires from starting or spreading. Finally, the Sludge Transportation System will be designed to maintain containment of the sludge materials under severe external fire conditions (engulfing fire at 1475°F) that are extremely unlikely to be exceeded in the tank farms. The overground portions of the Sludge Receiving Station will be covered with soil and possibly a concrete shielding layer which would protect the transfer lines from external fires. Based on the above, it was concluded that the risks of a range fire affecting sludge offloading activities or components in the tank farm is not credible.

REFERENCES

Coats, D. W. and R. C. Murray. 1984. *Natural Phenomena Hazard Modeling Project: Seismic Hazard Models for Department of Energy Sites*. UCRL-53582. Lawrence Livermore National Laboratory, Livermore, California.

DOE. 1987. *Final Environmental Impact Statement: Disposal of Hanford High-level, Transuranic, and Tank Wastes, Hanford Site, Richland, Washington*. DOE/EIS-0113. U. S. Department of Energy, Washington D.C.

KEH. 1989. *Hanford Plant Standards*. SDC-4.1, Rev. 14. Kaiser Engineers Hanford, Inc., Richland, Washington.

Kennedy, R. P. et al. 1990. *Design and Evaluation Guidelines for Department of Energy Facilities Subjected to Natural Phenomena Hazards*. UCRl-15910. Lawrence Livermore National Laboratory, Livermore, California.

LMHC. 1997. *Tank Waste Remediation System Basis for Interim Operation*. HNF-SD-WM-BIO-001, Revision F. Lockheed- Martin Hanford Company, Richland, Washington.

NLSI. 1996. *Lightning Safety at the Hanford Facility*. Contract MJK-SDC-278994. National Lightning Safety Institute, Louisville, Colorado.

NRC. 1981. *Standard Review Plan*. NUREG-0800. U. S. Nuclear Regulatory Commission, Washington, D.C.

Rhyne, W. R. 1995. *Recommended Onsite Transportation Risk Management Methodology*. HR 522-1. H&R Technical Associates, Inc., Richland, Washington.

Tallman, A. M. 1989. *Natural Phenomena Hazards, Hanford Site, Washington*. WHC-SA-0606-FP. Westinghouse Hanford Co., Richland, Washington.

WPPSS. 1981. *Final Safety Analysis Report for Washington Nuclear Plant Number 2 (WNP-2)*. Washington Public Power Supply System, Richland, Washington.

Zach, J. J. 1996. *Probability, Consequences, and Mitigation for Lightning Strikes of Hanford High Level Waste Tanks*. WHC-SD-WM-ES-387, Rev. 0. Westinghouse Hanford Co., Richland, Washington.

6.0 SELECTION OF EVALUATION-BASIS ACCIDENT SCENARIOS

This chapter develops a comprehensive list of potential accident scenarios from the results of the PHA process and then screens the scenarios to develop a list of accidents that will be analyzed in detail to develop the authorization basis for K Basin sludge transfer operations. The accident scenarios are catalogued in Section 6.1 and placed into appropriate frequency-consequence bins as determined from the PHA. Section 6.2 presents the list of evaluation-basis accidents and describes the rationale for their selection as well as the rationale for not selecting others.

6.1 DEVELOPMENT OF COMPREHENSIVE LIST OF ACCIDENT SCENARIOS

This section develops a comprehensive list of accident scenarios based on the information presented in Chapters 4 and 5 and Appendix C. These data were examined to develop short narrative descriptions of accident scenarios, which often involve designation of an initiating event and subsequent failures that lead to a release of radioactive or hazardous materials to the environment. The accident scenarios are divided into their respective severity categories in the following sections.

A unique identification number was assigned to each potential accident scenario in the PHA presented in Appendix C so each scenario would be properly accounted for in subsequent analyses. The identification number is a 2-digit alpha-numeric identifier placed in the "Causes" column of the PHA (see Tables 5.1 to 5.5). The first digit refers to the process step being analyzed. First digit "A" refers to receipt and onsite transport of the sludge container, "B" refers to connection and transfer operations, and "C" to "F" refers to storage period. The second digit is a numerical identifier for the accident scenarios within each process step. For example, accident scenario "A2" refers to the second scenario listed in the receipt and transport PHA.

The comprehensive list of accident scenarios that resulted from the PHA process is provided in the following pages. The scenarios are binned into appropriate severity categories (defined in Table 2.3), as determined in the PHA. Note also that the natural phenomena and extrinsic hazards that were determined to be credible in Chapter 5 are also provided in this list.

Severity Category S3

Seismic event (see Chapter 6)

A18 Flammable gas released from container explodes, fails container, and releases contents to environment.

A21 Flammable gases from container ignited, fails container, and releases contents to environment.

A22 Pyrophoric material in container ignited, fails container, and releases contents to environment.

A28 Cold temperature fails container due to brittle fracture and releases contents to environment.

A31 Truck strikes or drives over object in tank farm (above grade component), resulting in loss of tank containment/confinement function.

A32 Container struck by missile generated in tank farm, fails container, and releases contents to environment.

A33 Radiation-embrittled container struck by object in tank farm, fails container, and releases contents to environment.

A34 Mishandled truck drives over tank dome, causes dome failure.

A38 Chemical reaction in container causes failure due to overpressure, releases contents to environment.

A44 Defective sludge container fails, releases contents to environment.
A45 Trailer/tie-down failure causes container to fall to ground, container fails, and releases contents to environment.
B1 Trailer slips during connection/transfer, breaks connection, releases contents to environment.
B8 See B15.
B9 See B16.
B15 Chemical reaction between K Basin sludge and tank waste increases tank pressure and temperature, resulting in dome failure.
B16 K Basin sludge mistransferred to incorrect tank, causes chemical reaction between K Basin sludge and tank waste increases tank pressure and temperature (explosion), resulting in dome failure.
B17 Pyrophoric reaction in tank causes fire, overpressure, and tank failure (dome failure).
B18 Flammable gas in tank ignited by spark created during transfer operations, fire causes overpressure and tank failure (dome failure).
B19 Inadvertent connection made to flammable gas tank 241-AW-101, causes spark, ignites gases in AW-101, fire causes overpressure and tank failure (dome failure).
B20 K Basin sludge mistransferred to incorrect tank, causes chemical reaction (fire) between K Basin sludge and tank waste increases tank pressure and temperature, resulting in dome failure.
B35 See B15
B38 Rapid overcooling of tank vapor caused by transferring cold K Basin sludge creates vacuum in tank, leading to dome failure.
C1 Exothermic reaction from mixing incompatible chemicals causes tank dome failure.
C2 Organic fire in tank causes tank dome failure.
C3 Mistransfer causes contact of incompatible chemicals, causing dome failure.
C9 Explosion occurs caused by pyrophoric materials in sludge; leads to tank dome failure.
C10 Explosion occurs from mixing incompatible chemicals; leads to tank dome failure.
C11 Hydrogen or flammable gas explosion leads to tank dome failure.
C12 Electrical instrument creates ignition source, leading to explosion or fire (contributing event to explosions or fires caused by flammable gases, organic, etc. in tank.
C13 Explosion occurs caused by organic materials in tank; leads to tank dome failure.
C14 Explosion occurs caused by ammonium nitrate materials in sludge; leads to tank dome failure.
C15 Explosion occurs caused by nitrate materials other than ammonium nitrate in tank; leads to tank dome failure.
C16 See C11
C17 Vehicle operations within tank farm cause fire that spreads to the tank; leads to tank dome failure.
C18 Flammable material storage operations within tank farm cause fire that spreads to the tank; leads to tank dome failure.
C19 Fire in HVAC system spreads to tank; could spread to AW-101 watch list tank.
C20 Fire starts in riser, pump pit, or other penetration spreads to tank.
C44 Storage tank overfilled when sludge added.
D1 Chemical reaction causes tank overpressure; leads to HVAC failure.
F16 Inadvertent connection made to flammable gas tank leads to fire/explosion and subsequent failure of other tank.

Severity Category S2

A1 Sludge container dislodged from trailer due to collision, container is breached, contents spill onto ground.
A2 Sludge container dislodged from trailer due to severe driving error, container is breached, contents spill onto ground.
A3 Sludge container dislodged from trailer due to liquid sloshing (changes center of gravity), container is breached, contents spill onto ground
A10 Rapid shipping container corrosion due to improperly-neutralized sludge results in shipping container failure and spill of contents onto ground.
A11 Interruption of transfer operation causes shipping container to be set aside in tank farms. Results in accelerated corrosion rates and container failure, leading to spill on ground.
A23 Solar heating of container surface distorts seals, resulting in loss of containment barrier and pressurized release from container.
A24 Mishandled welding equipment or materials contact container surface, distorts seals, and results in pressurized release from container.
A25 Lead shielding material in container slumps due to overheat or impact and causes excessive radiation dose rate.
A26 Water in container freezes, volume expands, and fails container wall or penetration.
A35 Improperly sealed container leaks material to environment.
A36 Container penetration seal fails, leaks material to environment.
A37 Improperly sealed HEPA filter penetration leaks material to environment.
A42 Gases/vapors released from container, workers exposed to airborne material.
A43 Criticality in shipping container
A48 Road vibration causes incomplete seal, gases/vapors released from container.
A49 Road vibration increases internal pressure, material released when container seals broken during connection activity.
B7 Air/oxygen passes through open container vents, contacts sludge, and chemical reaction produces heat and pressure that expels material from container.
B10 Chemical corrosion causes failure of transfer component, releases material to the environment.
B11 Galvanic corrosion (dissimilar metal contact) causes failure of transfer component, releases material to the environment.
B12 Loss of lighting causes improper connection, leading to pressurized release when transfer begins.
B13 Loss of sludge mixer in container causes excessive vapor generation when mixing restored, vapor released to environment.
B14 Electric fault in transfer pump, I&C system, causes transfer to be interrupted, causes excessive vapor generation when transfer restarted, vapor released to environment.
B21 Solar radiation embrittlement fails receiving station equipment, results in spray leak during transfer.
B22 Cold weather conditions freezes material in receiving station equipment, plugs lines or valves, results in failure of receiving station due to excessive pressure and spray release.
B25 Container/trailer struck by moving vehicle, connection broken, material released to the environment.
B26 Failure of receiving station line connections caused by fatigue, release occurs during transfer.
B28 Receiving station line rupture during transfer releases material to the environment.
B33 Normal pump pressure fails transfer lines, connections, causes spray leak.

B34	High pump pressure caused by flow blockage (pump deadhead) fails pump, transfer lines, or connections, causes spray leak.
B36	Excessive steam generated in tank during transfer causes excessive vapor/aerosol release.
B39	Operators exposed to leakage through connectors.
B40	"Fuel flea" in sludge exposes operators to excessive radiation dose rate.
C4	Tank corrosion accelerated by sludge; leads to breach of containment barrier.
C5	Tank internal equipment corrosion accelerated by sludge; leads to breach of containment barrier.
C21	Tank bump or gas release event caused by heat generated by equipment in tank
C22	Tank bump or gas release event caused by heat generated by radioactive decay of sludge when added to tank.
C23	Sludge contains hot spot that creates excessive vapor/gas generation.
C24	Thermal cycling of tank from repeated transfers causes failure of tank liner and leakage to soil.
C25	Any of various tank liner failure mechanisms causes leakage to soil.
C27	Sludge transfer pump (on vehicle) causes excessive pressure in tank and gas release event.
C28	Chemical reaction leads to tank overpressure and gas release event.
C29	Loss of air balance due to plugging of HVAC inlet results in gas release event.
C32-C38	Tank liner failure due to various causes (excessive hydrostatic load, dynamic stress, missile, etc.) results in release to soil.
C40	Tank liner failure caused by nearby equipment vibration.
C41	Tank liner failure caused by nearby workers operating heavy machinery.
C42	Criticality created by chemical reaction resulting from addition of sludge to tank.
C43	Criticality created by concentrating fissile materials in sludge due to evaporation of water from tank wastes.
D2	HVAC system corrosion enhanced by sludge; leads to gas release event.
D5	See D34
D6	Loss of power to instrumentation and control system leads to HVAC failure and excessive vapor/aerosol releases from tank.
D7	Explosion caused by organic-nitrate materials on HVAC system surfaces leads to breach of confinement boundary and excessive vapor/aerosol releases from the tank.
D8	Explosion caused by ammonium nitrate or other inorganic nitrates on HVAC system surfaces leads to breach of confinement boundary and excessive vapor/aerosol releases from the tank.
D9	Explosion involving stored flammable gas bottles causes breach of HVAC system confinement boundary.
D10	Fire caused by accumulation of flammable vapors in HVAC system results in HVAC failure and breach.
D11	Fire caused by accumulation of combustible materials in HVAC system results in HVAC failure and breach.
D12	Fire caused by accumulation of pyrophoric materials in HVAC system results in HVAC failure and breach.
D13	Fire caused by vehicle operations in tank farm spreads to HVAC system resulting in HVAC failure and breach.
D14	Fire caused by flammable material storage operation in tank farm spreads to HVAC system and results in HVAC failure and breach.
D15	Use of non-intrinsically-safe tools and equipment during tank farm operations creates spark (ignition source), contributing to the occurrence of an explosion or fire in the HVAC system.

D16 Use of non-intrinsically-safe tools and equipment during tank farm surveillance/maintenance activities creates spark (ignition source), contributing to the occurrence of an explosion or fire in the HVAC system.
D17 See other fire scenarios.
D18 Solar exposure heats HVAC components, fails or distorts seals, and results in gas release event.
D19 Frozen lines create flow blockage and subsequent overpressurization.
D21 Internal flooding of HVAC system caused by rupture or overflow of moisture separator.
D22 Excessive HEPA filter loading leads to loss of efficiency.
D23 Excessive moisture on HEPA filter leads to loss of efficiency.
D24 Excessive air/vapor temperature applied to HEPA filter leads to loss of efficiency.
D25 Chemical reaction on HEPA filter media leads to loss of efficiency.
D26 HEPA filter rupture or bypass leads to loss of filtration.
D27 Structural damage leads to loss of HEPA filter efficiency.
D31 Ground creep causes excessive pressure in HVAC system, fails confinement boundary.
D32 Plugged pipe/duct leads to HVAC overpressure, leading to structural failure.
D33 Damper fails closed causing HVAC overpressure, leading to structural failure.
D34 Loss of exhaust fan causes HVAC overpressure, leading to structural failure.
D35 Moisture separator failure causes HVAC overpressure, leading to structural failure.
D41 Structural damage/failure of HVAC system confinement boundary due to missiles.
D42 HVAC confinement boundary integrity lost due to excessive overburden on underground lines.
D43 Structural damage/failure of HVAC system confinement boundary due to drop of a heavy load.
D44 Structural damage/failure of HVAC system confinement boundary due to subsidence created by flood.
D45 Vehicle collision with aboveground equipment causes loss of HVAC system confinement boundary.
D46 Rupture/damage of HVAC component (heater, moisture separator, filter housing, etc.) causes loss of HVAC system confinement boundary.
D48 Nearby workers exposed to toxic vapors released from ventilation system.
D49 Vibration from nearby heavy equipment operations or vehicle passage causes failure of HVAC system component and subsequent gas release event.
D50 Transfer equipment vibration causes failure of HVAC system component and subsequent gas release event.
D51 See D45.
E5 Hydrogen gas escapes tank, accumulates in pump pit, and explodes.
E6 Flammable gas escapes tank, accumulates in pump pit, and starts fire.
E7 Pyrophoric material accumulates in pump pit and starts fire.
E8 Welding fire spreads to dome penetration or pump pit, fails seal, and leads to gas release event.
E9 External fire spreads to dome penetration or pump pit, ignites flammable gas, and leads to gas release event (potential contributing event).
E10 Riser gasket degradation leads to loss of confinement boundary and subsequent gas release event.
E11 Riser or pump pit intentionally open leads to gas release event.
E12 Riser or pump pit inadvertently left open leads to gas release event.
E13 Infiltration through pump pit drain line leads to gas release event.

E14 Infiltration through leak detection pit drain line leads to gas release event.
E15 Infiltration through instrument opening leads to gas release event.
E16 Infiltration through central pump pit to annulus pump pit cross-connection line leads to gas release event.
E19 Riser fails due to overpressurization
E20 Pump pit fails due to overpressurization.
E22 Vehicle accident fails riser, results in gas release event.
E23 Heavy load dropped on riser or pump pit causing breach of confinement boundary, results in gas release event.
E24 Riser, pump pit failure due to overburden results in gas release event.
E25 Loss of integrity through pump pit opening leads to gas release event.
E26 Riser, pump pit failure due to vibration results in gas release event.
F8 Explosion in leak detection pit (various causes such as flammable gas, pyrophoric material, exothermic chemical reaction) leads to structural failure.
F9 Explosion in annulus pump pit (various causes such as flammable gas, pyrophoric material, exothermic chemical reaction) leads to structural failure.
F10 Explosion in process piping (various causes such as flammable gas, pyrophoric material, exothermic chemical reaction) leads to structural failure.
F11 Pyrophoric material in leak detection pit causes fire and leads to structural failure.
F12 Pyrophoric material in annulus pump pit causes fire and leads to structural failure.
F13 Pyrophoric material in process piping causes fire and leads to structural failure.
F14 Flammable gas in leak detection pit causes fire and leads to structural failure.
F15 Flammable gas in annulus pump pit causes fire and leads to structural failure.
F17 Pipe rupture leads to gas release event.

Severity Category S1

A6 Externally-contaminated shipping container received at tank farms, results in excessive worker exposures.
A7 Chemicals in tank farm enhance container corrosion rates; leads to leakage.
A8 High surface contamination in tank farms causes high dose rates in areas occupied by transfer personnel; results in excessive radiation doses to operators.
A9 Chemicals used in tank farm escape container(s) and result in exposures of workers to potentially-hazardous vapors.
A27 Cold ambient temperature embrittles gaskets, causes loss of containment, material released from container.
A29 Thermal cycling causes seal deformation, material released from container.
A30 Differential thermal expansion of container and seal materials causes loss of containment boundary, material released from container.
A40 Excessive surface contamination (see A6)
A41 Container contains "fuel flea", surface dose rate exceeds limits, workers receive excessive exposures.
A46 Container releases toxic vapors/aerosols, worker exposed.
A47 Workers exposed to toxic vapors released from fuel tank, compressor, etc.
B2 Fluid splashes when transferred into tank, results in excessive vapor generation in tank, vapors/gases released to environment.
B3 Sludge distributor fails, falls into tank, results in excessive vapor generation in tank, vapors/gases released to environment.

B4	Operators exposed to residual material in transfer lines, connectors, valves, etc.
B5	Contamination (e.g., sand) in transfer pump causes pump failure, missile generation, and operator injury.
B6	Residuals in lines/valves react, producing heat and pressure, and disperses residual material.
B23	Excessive vapor release from tank caused by cool K Basin sludge striking warmer waste in tank.
B24	Excessive vapor release from tank caused by K Basin sludge striking tank surfaces.
B27	Foreign object in sludge strikes tank wall or internal equipment (spark source).
B29	Loss of power source to container instrumentation and control system causes operator error.
B30	Loss of power to tank farm lighting system causes operator error.
B31	Loss of power to sludge mixer in container results sludge to settle to bottom, interferes with capability to completely empty container, results in excessive radiation exposures.
B32	Loss of power to sludge distributor causes uneven distribution of sludge.
B37	Gas pockets in tank sludge released during transfer.
C6	Loss of electric power to tank instrumentation leads to incorrect operator action.
C7	Loss of electric power to sludge distributor leads to incorrect sludge position.
C8	Electric fault in tank instrumentation leads to incorrect operator action.
C26	Moisture in sludge (and subsequent rinse water) causes excessive vaporization and gas release event.
C30	Operators receive excessive dose from material in tank.
C31	Operators exposed to vapors released from HVAC system.
C39	Operators exposed to toxic vapors released from tank.
D3	See D29
D4	See D30
D28	Vapor generation rate increased following exhaust fan failure.
D29	Heater failure allows excessive moisture to HEPA filter, reducing efficiency.
D30	Moisture separator failure allows excessive moisture to HEPA filter, reducing efficiency.
D36	Loss or reduction of intake air flow causes excessive vacuum in tank and loss of air balance.
D37	Valve failure in intake air flow causes excessive vacuum in tank and loss of air balance.
D38	Operators exposed to excessive external dose rate when handling decontamination and spill cleanup materials.
D39	Operators exposed to excessive external dose rate when handling solid wastes generated during surveillance, maintenance, operations activities.
D40	HEPA filter failure leads to excessive occupational exposures.
D47	See C31.
E1	Riser failure due to corrosion causes gas release event.
E2	Pump pit or other dome penetration failure due to corrosion causes gas release event.
E3	Dome penetration seal failure due to corrosion accelerated by sludge; causes gas release event.
E4	Internal tank equipment corrosion accelerated by sludge; causes gas release event
E21	Operators exposed to excessive dose rate from vapors/gases in pump pit, risers, or other penetrations.
F1	Equipment/piping in leak detection pit fails due to corrosion (accelerated by K Basin sludge), causes gas release event.
F2	Equipment/piping in annulus pump pit fails due to corrosion (accelerated by K Basin sludge), causes gas release event.
F3	Other piping fails due to corrosion (accelerated by K Basin sludge), causes gas release event.

F4-F7 Loss of power to various system components; contributes to other accident scenarios but do not directly cause release or are not initiating events.
F18 Rupture/breach of leak detection pit leads to release.
F19 Rupture/breach of annulus pump pit leads to release.
F20 Operators exposed to excessive radiation dose rate from leakage through piping, annulus pump pit, or leak detection pit.
F21 Operators exposed to excessive radiation dose rate from fuel fleas.
F22 Receiving station piping fails due to overburden.
F23 Leak detection pit fails due to overburden.
F24 Annulus pump pit fails due to overburden.
F25 Heavy load dropped on piping, annulus pump pit, or leak detection pit fails containment barrier.
F26 External pressure from ground-creep on piping, annulus pump pit, or leak detection pit fails containment barrier.
F27 Vehicular collision fails above-grade piping system containment barrier.
F28 Vehicular collision fails annulus pump pit containment barrier.
F29 Vehicular collision fails leak detection pit containment barrier.
F30 Vibration fails piping, annulus pump pit, or leak detection pit containment barrier.

Severity Category S0 (Industrial accidents or scenarios that do not involve exposures to radioactive or hazardous chemical materials)[1]

A4 Truck collision injures driver or pedestrian in tank farm
A5 Severe driving error injures driver or pedestrian in tank farm
A12 Operator electrocuted or burned by contacting exposed electrical system components connecting shipping container to tank farm
A13 Operator electrocuted or burned by contacting exposed electrical system components on shipping container/vehicle (pump power supply)
A14 Operator electrocuted or burned by contacting exposed air compressor electrical components on shipping container/vehicle.
A15 Operator electrocuted or burned by contacting exposed instrumentation and control (I&C) system components on shipping container/vehicle.
A16 Fuel or lube oil explosion on truck injures workers
A17 Welding gases explode and injure workers
A19 Truck-related fire (fuel, lube oil, hot brakes, engine) injures workers.
A20 Welding gases start fire and injure workers.
A39 Air compressor fails, injures nearby worker.

6.2 SELECTION OF EVALUATION-BASIS ACCIDENT SCENARIOS

The first step in the accident screening process was to identify accident scenarios assigned to severity category 1 that had frequencies greater than extremely unlikely. Such scenarios would clearly be evaluation-basis scenarios as they result in a combination of high consequence and

[1] These are focused on unique or new industrial hazards introduced by the sludge receiving operations. Existing industrial hazards, such as slips, falls, rotating machinery (fan motors) etc., are not identified here as they are addressed in the *Tank Farms Health and Safety Plan*.

relatively high frequency which would merit further analysis. Inspection of the PHA tables yielded no scenarios of this type.

The second step was to attempt to group the scenarios in severity category 1 into "families" or scenarios that share common initiating events or release mechanisms. These "families" were determined to be:

1. **Rupture of transfer line**, connections, etc. during a transfer. Many potential causes were identified, including seismic events, overpressure, improper connection, trailer movement during transfer, and others. Depending upon the extent of the rupture and the system pressure, the release may consist of a spray release, liquid spill, or both.

2. **Flammable Gas Deflagration** was considered as a possible outcome of many different accident scenarios, including seismic events, mixing of incompatible chemicals and subsequent fire or explosion, or failure of the ventilation system. The release from such an event would include vapors, supernate, and sludge material within tank AW-105, including K Basin sludge.

3. **Truck collision/fire** could occur as a result of numerous potential scenarios, possibly resulting in a pressurized release of aerosols and vapors from the container as well as liquid spills. Possible causes of such an event would include operator error, improper sealing of the container at K Basins, failed seals on penetrations into the container cavity, and inadvertently or intentionally delaying container unloading operations for a long period of time (allowing hydrogen gas to accumulate to flammable concentrations in the container).

4. **Pyrophoric Chemical Reaction** could occur as a result of adding the K Basin sludge materials to the tank. The conditions under which a chemical reaction could be initiated and the potential controls to ensure this does not occur are provided in the accident analysis section.

5. **Inadvertant Criticality** events are considered in the accident analysis because there is sufficient fissile material to accumulate a critical mass and controls will be needed to ensure that inadvertant criticality is an incredible event.

All of the scenarios within these families were retained for further analysis.

The next step was to examine category 2 and 3 accident scenarios. The severity category 2 and 3 scenarios that were rated as having extremely unlikely frequencies in this severity category were screened out or identified as potential contributors to the accident families listed above. This is because the risks of these scenarios would be lower than the risks of extremely unlikely scenarios in category 1 due to their lower consequences. Therefore, such accident scenarios would be bounded by the higher-consequence category 1 scenarios that have approximately equivalent frequencies. Again, the scenarios were grouped into "families" as was done for severity category 1 scenarios. This resulted in creation of the following families:

6. **Shipping container failure without subsequent fire**. These accident scenarios may be caused by vehicle collision, improperly installed seals, seal failure in transit, or an event that could increase pressure within the container. The material released from such an event could

be vapor or liquid, depending upon which seals are failed and the operation occurring when the seal fails.

7. **Overpressurization of AW Tank Farm ventilation system**. These scenarios may be caused by incompatible chemical reactions, flammable gas deflagration, or other internal pressure-inducing mechanism or by outside forces, such as seismic events. The internal pressure generated in this family of accidents is not sufficient to cause tank dome failure but could cause an overpressure of ventilation system components that results in loss of confinement of the vapors and gases removed from the tank head space.

As with the severity category 1 scenarios, many of the accident scenarios identified in Section 6.1 are contributors to the families identified above. In essence, they represent separate pathways towards the occurrence of the more-encompassing family event. For example, tank overpressurization and subsequent failure of the HVAC system may occur as a result of a severe exothermic chemical reaction, as a result of a pyrophoric reaction, a seismic event, or other event that could lead to a substantial increase in tank vapor space pressure. In the detailed accident scenario modeling process, all of these potential pathways are explored and quantified to develop an estimate of the frequency of tank dome failure (resulting from the addition of
K Basin sludges to tank AW-105). Therefore, the majority of the accident scenarios identified in Section 6.1 are actually subsumed within the families identified above and were not screened out from further consideration, as demonstrated in Table 6.1.

Table 6.1. Relationship Between Accident Families and the Accident Scenarios Identified in the PHA

Accident Family	PHA Scenarios Within Family
Transfer Line Rupture/Spray Leak	Seismic, B1, B6, B10, B11, B12, B21, B22, B25, B26, B28, B33, B34, D19,
Tank Overpressurization	Seismic, A34, B15, B16, B17, B18, B19, B20, B38, C1, C2, C3, C9, C10, C11, C12, C13, C14, C15, C17, C18, C19, F16,
Truck Collision and Fire	A1, A2, A3, A10, A11, A18, A21, A22, A32, A43, A44
Shipping Container Failure Without Fire	A27, A29, A30, A35, A36, A37, A42, A47, A48, B7, D36, D37
Criticality	A43, C42, C43
Pyrophoric Chemical Reaction	A22, B8, B17, B35, B35, C13, C14, C15, C16, C28, D1, D7, D8, D10, D12, E7, F11, F12
Flammable Gas Deflagation	A18, A21, B18, B37, C1, C12, D10, E5, E6, E9, F10, F14, F15, F16

7.0 ACCIDENT ANALYSIS

This chapter presents the accident analysis for the K Basin sludge offloading and storage activities. The major steps in the analysis involved development of the frequencies and consequences of the bounding accident scenarios, comparison to the WHC risk evaluation guidelines (guidelines from Rev. 1 of WHC-CM-4-46 were used here), and development of proposed controls to ensure the risks remain below guidelines. The information in this section also forms the basis for the Safety Class Evaluation that is presented in Chapter 8. An overview of the general approach used in the detailed evaluation of potential accidents is presented in Section 7.1. The accident analyses are presented in Section 7.2. The approaches used in the accident analyses are described in detail in each accident analysis subsection.

In each accident analysis, the accident is described, the frequency of the accident is determined, the source term and consequences to the Maximum Exposed Individuals (MEI) onsite and offsite are evaluated. The key assumptions used in the analysis are listed, and the need for controls is assessed. Estimates of the mitigated and unmitigated frequencies and consequences of each potential accident scenario are discussed in each accident analysis subsection. Based on the results of the accident analyses, the safety class and safety-significant SSCs are identified.

7.1 DESCRIPTION OF ACCIDENT ANALYSIS APPROACH

The general approach to the accident analysis is illustrated in Figure 7.1. As shown, the design basis accidents identified in Chapter 6 were subjected to the detailed accident analyses in this chapter. For each accident scenario identified in Chapter 6, unmitigated accident frequencies and consequences were calculated and then compared to the WHC risk evaluation guidelines given in WHC-CM-4-46, Rev 4 (WHC 1996a). If the unmitigated frequencies and consequences were found to be below the guidelines (i.e., PASS), the assumptions and bases for the accident frequency and consequence results were reviewed to identify potential TSR controls and safety class and safety-significant SSCs. If the frequencies and consequences were found to be above the guidelines, potential mitigation measures were identified that could reduce the frequencies and/or consequences of the event. The unmitigated calculations were then modified to incorporate the effects of the postulated mitigation measures. Mitigated accident frequency and consequence results were then calculated using the modified values. The mitigated scenario results were compared to the risk evaluation guidelines and, if the results were found to be below the guidelines, the mitigation measures as well as the assumptions and bases for the frequency and consequence results were reviewed to identify safety SSCs and potential controls. The cycle through the identification of mitigation measures and re-quantification of the frequencies and consequences is repeated until acceptable frequencies and consequences are developed.

The radiological and toxicological consequences of the design basis accidents were evaluated for comparison against the risk evaluation guidelines. This required calculation of the radiological dose and toxic chemical concentrations at the maximum onsite and offsite individual locations as a result of the accidental releases. The following paragraphs describe some key assumptions and definitions used in the consequence calculations.

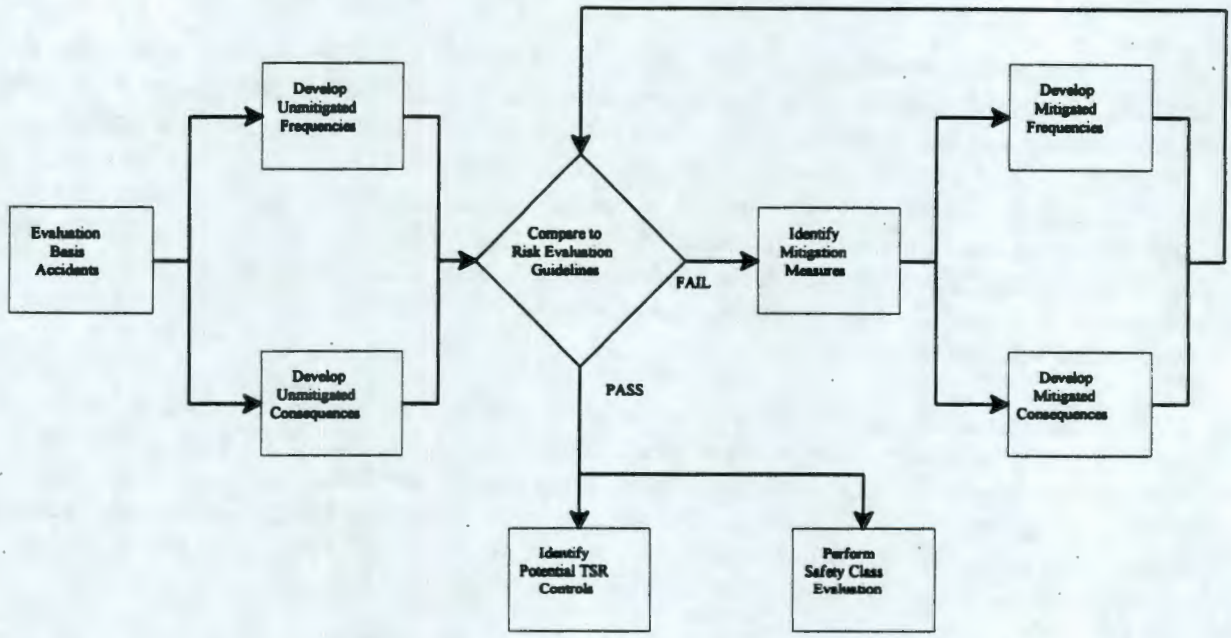

Figure 7.1. General Overview of the Accident Analysis Approach

Radiological Exposure Pathways

There are two potential radiological exposure pathways associated with accidental releases of radioactive materials: the internal and external exposure pathways. The total radioactive dose received by an individual is equal to the sum of the dose contributions from the internal and external exposure pathways.

The major internal exposure pathway for tank farm accidents is the inhalation pathway. Exposure through the inhalation pathway occurs when an accident results in a release of airborne radioactive materials that are transported downwind and inhaled by the maximum onsite and offsite individuals or when radioactive materials that have been deposited on the ground during plume passage become resuspended and subsequently inhaled. To maintain consistency with the approach taken in the TWRS BIO (LMHC 1997), the dose contribution from the inhalation of resuspended materials was not calculated in this preliminary safety assessment.

The other internal exposure pathway is the ingestion pathway. Exposure through the ingestion pathway occurs when radioactive materials that have been deposited offsite are ingested, either by eating crops grown in, or animals raised on, contaminated soil, or through drinking contaminated water. Potential doses from the ingestion pathway are not included in the comparison to risk guidelines because there are DOE, DOE-RL, state, and federal programs in place to prevent ingestion of contaminated food in the event of an accident (DOE-RL 1994, WSDOH 1993, EPA 1992). As a result, ingestion doses were not calculated in this assessment.

The external exposure pathways include submersion, ground shine, and direct exposure from a concentrated radioactive source, such as a pool of liquid formed when radioactive material is spilled to the ground. Submersion refers to the external dose received by a person located in the airborne radioactive plume during plume passage. Ground shine refers to the external dose received by a person standing on or near ground contaminated by radioactive materials deposited during passage of the airborne radioactive plume. Because K Basin sludge shipments do not contain detectable quantities of short-lived noble gases or iodines, the submersion doses are orders of magnitude lower than the inhalation doses. Similarly, the ground shine dose is several orders of magnitude lower than the inhalation dose. The dose contribution from the direct exposure pathway is also insignificant compared to that from the inhalation pathway for the tank farms accident scenarios except the scenarios involving leakage from ruptured waste transfer lines. Such failures may result in a spill of radioactive material that forms a pool of liquid and results in a direct radiation dose from the surface of the pool. For scenarios involving formation of a pool of radioactive liquid, the direct dose contribution to the total dose is significant and is therefore included in the calculation of the total radiological dose used to compare against the risk evaluation guidelines. To the extent possible, radiological exposure calculations in this document are consistent with WHC-SD-WM-SARR-016, Rev. 2 (WHC 1996b) and WHC-SD-WM-SARR-037, Rev. 0 (Cowley 1996).

Toxicological Exposure Pathways

The toxicological source terms for K Basin sludge accidents in the tank farm consist of liquid and solid particulates and gases. Evaluation of the effects of chemical exposure has been conducted only for the airborne pathway. Exposure limits are based on the inhalation pathway. Exposure to skin and the eyes is considered in development of the limits for corrosives and irritants, but inhalation is the dominant pathway.

Particles transported to the maximum onsite or offsite individual are assumed to be respirable, with Airborne Release Fractions (ARFs) and Respirable Fractions (RFs) determined by data specific to the accident scenario. Concentrations at the maximum onsite or offsite individual location are computed using a Gaussian plume model for particles and gases. All material reaching the lung is assumed to be retained in the body.

The other potential internal exposure pathway is the ingestion pathway. Ingestion of chemicals could occur from consuming crops or animals that have been exposed to the chemicals. Potential chemical exposures from the ingestion pathway are not included because there are federal and state programs to prevent ingestion of contaminated food (DOE-RL 1994, WSDOH 1993, EPA 1992). This approach is consistent with the approach taken for radioactive exposures described above.

Toxic chemicals are chemicals that can affect other vital organs. The risk evaluation guidelines were based on those in the Emergency Response Planning Guide (ERPG) (AIHA 1989) using the techniques developed by the Management and Operations (M&O) Committee (Craig 1993). Risk evaluation guidelines for the chemicals of interest to this preliminary safety assessment were taken from WHC-SD-WM-SARR-011, Rev. 2 (WHC 1996c).

Onsite and Offsite MEIs

The calculated radiological doses are presented in terms of the Effective Dose Equivalent (EDE). The doses represent the lifetime dose (50 yr) that results from external exposure plus intake via inhalation of released radioactive materials. EDE is the sum of the committed dose equivalent from internal deposition of radionuclides in the body and the dose equivalent from external radiation. Committed dose equivalent is the total dose equivalent accumulated in an organ or tissue in the 50 yrs following a single intake of radioactive materials into the body. The committed dose equivalent for a single radionuclide is the product of the dose to a specific organ and the weighting factor for that organ. For further information, refer to Napier et al. (1988).

Two hypothetical, maximally-exposed receptors were used to determine the consequences from each accident event. Doses were calculated for the Onsite Maximally Exposed Individual (MEI) and the Offsite MEI. The onsite MEI was assumed to be located 100 m away from the release point in the direction that yields the greatest atmospheric dispersion coefficient. For accidents in the tank farms, this occurs east of a release point. The offsite MEI was assumed to be located at the site boundary in the direction of the highest atmospheric dispersion coefficient or 8760 m north of the release point. These locations and their atmospheric dispersion coefficients were taken from WHC-SD-WM-SARR-016, Rev. 2 (WHC 1996b). Ground-level releases were assumed for all scenarios.

Dose Calculation Model

The GENII code version 1.485 (Napier et al. 1988) was used for dose calculations from airborne releases. Maximum individual exposure parameters were used in the calculations. All doses were based on a 50-yr commitment period.

The Onsite MEI and the Offsite MEI were assumed to be fully-exposed to inhalation and submersion doses from the centerline of the passing plume. The exposure parameters assumed in the calculations are as follows (PNL-3777, Rev 2, Schreckhise et al. 1993).

The GENII code was used to calculate unit dose values (units are Rem/L). These unit doses are different than the Unit Liter Doses (ULDs) presented in the TWRS BIO. The unti doses calculated here include transport and uptake whereas transport and uptake are computed separately in the BIO. GENII offers a choice between entering MEI distances and directions, which the code uses in conjunction with joint-frequency data to calculate atmospheric dispersion coefficients, or entering externally-calculated atmospheric dispersion coefficients. For this assessment, the finite plume model was used in the GENII calculations and the MEI distances and directions were input to the code. Therefore, atmospheric dispersion coefficients were calculated by GENII which were then used to calculate the radiological unit doses for K Basin sludge materials. The GENII-calculated coefficients were not the same as those developed in WHC-SD-WM-SARR-016, Rev. 2 (e.g., plume meander correction is not included in GENII). Adjustments to the GENII-calculated doses were made by multiplying the GENII-calculated Unit dose by the ratio of the atmospheric dispersion coefficients calculated in WHC-SD-WM-SARR-016, Rev. 2, to the GENII-calculated coefficients. This results in adjusted unit doses that are consistent with those in WHC-SD-WM-SARR-016, Rev. 2, but that are more accurate than GENII-calculated doses using an input atmospheric dispersion coefficient.

Some of the accident scenarios evaluated in this section involve releases of DST wastes. The DST waste dose calculation methodology employed here is the same as that described in WHC-SD-

WM-SARR-016 and WHC-SD-WM-SARR-037 according to the following formula:

$$\text{Dose} = ST * ULD * BR * X/Q$$

where
- ST = Source term (L)
- ULD = Unit liter dose, Rem/L
- BR = Breathing rate (m^3/sec)
- X/Q = Atmospheric dispersion coefficient (sec/m^3)

The ST values are calculated for each scenario involving DST waste releases later in this chapter. The ULD values, which are different than the unit doses from K Basin sludge releases described above (i.e., ULDs do not include transport and uptake of the release materials), were taken from Cowley (1996) and amount to 5.3E+07 Rem/L for DST solids and 6.1E+05 Rem/L for DST liquids. A composite ULD for mixtures of DST wastes at 1/3 solids and 1/3 liquids was calculated to be 1.8E+07 Rem/L. The breathing rates used in the calculations were 3.3E-04 m^3/sec for the onsite MEI and 2.7E-04 m^3/sec for the offsite MEI (WHC 1996b). The values of the atmospheric dispersion coefficients were also taken from WHC 1996b).

Radiological Inventory and Source Term Development

To calculate the Unit doses, it is necessary to determine release quantities in terms of the amount of respirable material released. The released materials then must be characterized in terms of their radioactive and chemical constituents since different materials have different health effects. The quantity of respirable material released is then used in combination with the concentrations of the radioactive (or toxic chemical) constituents in the material released to determine the inhalation dose received by the maximum onsite and offsite individuals. The basic equation used to determine accidental release quantities is the following:

$$Q = MAR \times ARF \text{ (or ARR)} \times RF$$

where
- Q = Release quantity (liters) or release rate (liters/sec)
- MAR = Material at risk (liters)
- ARF = Airborne release fraction (unitless)
- ARR = Airborne release rate (fraction per-unit-time)
- RF = Respirable fraction (unitless)

The generation of the accidental release quantities or release rates is described in each of the accident analysis sections. Note that in some cases accident release quantities or rates are derived using information from referenced sources rather than the formula.

The material at risk in the above equation is represented by radionuclide and toxic chemical concentrations in K Basin sludge. The radionuclide and chemical constituents of the sludge were derived from sample data contained in *Analysis of Sludge from Hanford K East Basin Floor and Weasel Pit* (Makenas et al. 1996) and Lodwick (1997). Note that Makenas et al. provides sample data for K East Basin floor and weasel pit sludge. Characterization data on K East Canister, North Loadout Pit, and Fuel Wash sludges as well as K West Basin Canister, North Loadout Pit, and Fuel Wash sludges are being developed. The best available characterization data on these latter sludge materials were provided by Lodwick (1997) but should be considered preliminary.

The concentrations of a wide variety of radioactive and chemical analytes were given in the references. All of the radioactive analytes listed were included in the calculation of the unit liter doses described below. For this analysis, the sample data for as-settled sludge was used. Maximum observed concentration values were used for each radionuclide. Similarly, the characterization data for canister, loadout pit, and fuel wash sludges are based on as-settled sludge projections. The raw data provided by Spent Nuclear Fuel Program staff (total quantities of each analyte), estimated sludge volumes, and concentrations of each analyte in the various sludges are presented in Tables 7.1 (radionuclides) and 7.2 (chemicals). The concentration of polychlorinated biphenyls (PCBs) in the sludge is not shown in the table. The PCB concentrations range from 10 to 220 ppm and are only present in certain sludge samples. The source of PCB contamination in the basin is unclear. PCBs are included in the toxicological exposure analysis.

It was assumed that the K Basin sludge material to be transferred into the tank would be pretreated (chemical adjustment) and homogenized. The shipped sludge consists of 30% as-settled sludge and 70% K Basin water by volume. The unit source compositions (Ci per liter of sludge) for radionuclides in the as-settled sludge, K Basin water, and the as-shipped sludge/water material are presented in Table 7.3. The data in this table were derived from the radionuclide composition of fuel wash sludge which was determined to have higher radionuclide concentrations than the other sludge types and so represents the worst-case shipping container loading. Radionuclide composition of the bulk sludge, assuming a homogeneous mixture basin water and all sludge materials from both K East and K West Basins, are shown in Table 7.4. Chemical concentrations are presented in Table 7.5, again assuming the chemical composition of fuel wash sludge which exhibit higher chemical concentrations than the other K East and K West Basin sludge materials. The chemical composition of bulk sludge (i.e., K East and K West sludges plus basin water) is shown in Table 7.6. Concentrations of anions shown in Tables 7.5 and 7.6 were taken from Makenas et al. (1996) and are the best available but may not be fully representative of all sludge materials.

For the toxic chemicals, a screening analysis was performed to identify the toxic chemicals and their projected forms in the sludge that would dominate the toxic chemical exposures. The screening was performed primarily by reviewing the chemistry data in Appendix A of WHC-SD-WM-SARR-011, Rev. 2 (WHC 1996c). Although the document addresses tank waste and not K Basin sludge, the sludge would need to be adjusted to meet compatibility requirements before it can be added to the tank. It is postulated that the most important chemical parameter that determines the form and chemical compounds associated with each chemical specie is the pH. Since the pH of the sludge will be adjusted at K Basin to meet the acceptance requirements for tank wastes (highly alkaline), the chemical form and compounds in the adjusted sludge should be the same as they currently exist in the tanks. Thus, the information in SARR-011 is most likely relevant to K Basin sludge. A summary of the chemical screening exercise is presented in Table 7.7. The concentrations of the chemicals that survived the screening exercise were taken from Table 7.4 and 7.6 and are presented in Table 7.8.

Table 7.1. Volumes and Radionuclide Compositions of K Basin Sludge Materials (As-settled Solids)

Sludge Type	Floor		Pits		N. Loadout		Canister		Fuel Wash		Bulk Sludge	
Radionu-clide	Ci	uCi/mL	Ci	uCi/mL	Ci	uCi/mL	Ci	uCi/mL	Ci	uCi/mL	Ci	uCi/mL
K East Basin Sludge Materials												
Am-241	1.46E+03	5.62E+01	1.65E+02	1.12E+01	8.05E+00	1.07E+00	1.89E+03	2.55E+02	1.40E+03	4.38E+02	4.92E+03	2.38E+01
Bi-212	9.23E+01	3.55E+00	3.38E+01	2.30E+00	0.00E+00	0.00E+00	0.00E+00	0.00E+00	0.00E+00	0.00E+00	1.26E+02	0.00E+00
Ce-144/Pr	2.99E+02	1.15E+01	3.00E+02	2.04E+01	0.00E+00	0.00E+00	3.16E+02	4.27E+01	2.34E+02	7.31E+01	1.15E+03	3.98E+00
Cm243/244	3.32E+02	1.28E+01	6.98E+01	4.75E+00	0.00E+00	0.00E+00	9.73E+01	1.32E+01	7.20E+01	2.25E+01	5.71E+02	1.22E+00
Co-60	6.09E+01	2.34E+00	3.44E+01	2.34E+00	1.64E+00	2.19E-01	7.41E+02	1.00E+02	5.50E+02	1.72E+02	1.39E+03	9.35E+00
Cs-134	2.30E+01	8.85E-01	6.07E+00	4.13E-01	0.00E+00	0.00E+00	2.16E+02	2.92E+01	1.60E+02	5.00E+01	4.05E+02	2.72E+00
Cs-137	3.85E+04	1.48E+03	7.41E+03	5.04E+02	7.43E+01	9.91E+00	7.14E+04	9.65E+03	5.28E+04	1.65E+04	1.70E+05	8.98E+02
Eu-152	1.83E+01	7.04E-01	1.03E+01	7.01E-01	0.00E+00	0.00E+00	5.36E+00	7.24E-01	3.95E+00	1.23E+00	3.79E+01	6.72E-02
Eu-154	2.31E+02	8.88E+00	2.91E+01	1.98E+00	1.64E+00	2.19E-01	6.77E+02	9.15E+01	5.02E+02	1.57E+02	1.44E+03	8.54E+00
Eu-155	1.07E+02	4.12E+00	1.90E+01	1.29E+00	9.03E-01	1.20E-01	1.80E+02	2.43E+01	1.34E+02	4.19E+01	4.41E+02	2.28E+00
Nb-94	1.17E+01	4.50E-01	3.25E+00	2.21E-01	0.00E+00	0.00E+00	0.00E+00	0.00E+00	0.00E+00	0.00E+00	1.50E+01	0.00E+00
Np-237	2.22E-01	8.54E-03	1.14E-01	7.76E-03	0.00E+00	0.00E+00	3.68E-01	4.97E-02	2.72E-01	8.50E-02	9.76E-01	4.63E-03
Pu-238	2.83E+02	1.09E+01	5.97E+01	4.06E+00	1.60E+00	2.13E-01	7.31E+02	9.88E+01	5.42E+02	1.69E+02	1.62E+03	9.22E+00
Pu-239/240	1.17E+03	4.50E+01	2.19E+02	1.49E+01	9.74E+00	1.30E+00	2.00E+03	2.71E+02	1.49E+03	4.66E+02	4.89E+03	2.53E+01
Ra-226	5.72E+02	2.20E+01	1.60E+02	1.09E+01	0.00E+00	0.00E+00	0.00E+00	0.00E+00	0.00E+00	0.00E+00	7.32E+02	0.00E+00
Ru-106/Rh	4.36E+02	1.68E+01	1.17E+02	7.96E+00	0.00E+00	0.00E+00	2.84E+02	3.84E+01	2.10E+02	6.56E+01	1.05E+03	3.57E+00
Sb-125	9.77E+01	3.76E+00	3.34E+01	2.27E+00	0.00E+00	0.00E+00	3.83E+02	5.17E+01	2.85E+02	8.91E+01	7.99E+02	4.85E+00
Sr-90	3.59E+04	1.38E+03	5.44E+03	3.70E+02	0.00E+00	0.00E+00	5.48E+04	7.41E+03	4.05E+04	1.27E+04	1.37E+05	6.89E+02
Tl-208	3.09E+02	1.19E+01	1.04E+02	7.07E+00	0.00E+00	0.00E+00	0.00E+00	0.00E+00	0.00E+00	0.00E+00	4.13E+02	0.00E+00
Y-90	0.00E+00	0.00E+00	0.00E+00	0.00E+00	0.00E+00	0.00E+00	0.00E+00	0.00E+00	4.05E+04	1.27E+04	4.05E+04	6.89E+02
Pu-241	0.00E+00	0.00E+00	0.00E+00	0.00E+00	1.37E+02	1.83E+01	0.00E+00	0.00E+00	3.02E+04	9.44E+03	3.03E+04	5.14E+02
Ba-137	0.00E+00	0.00E+00	0.00E+00	0.00E+00	7.03E+01	9.37E+00	0.00E+00	0.00E+00	5.00E+04	1.56E+04	5.01E+04	8.50E+02
Volume, m^3	26		14.7		7.5		7.4		3.2		58.8	

Table 7.1. Volumes and Radionuclide Compositions of K Basin Sludge Materials (As-settled Solids)

Sludge Type	Floor		Pits		N. Loadout		Canister		Fuel Wash		Bulk Sludge	
Radionu-clide	Ci	uCi/mL	Ci	uCi/mL	Ci	uCi/mL	Ci	uCi/mL	Ci	uCi/mL	Ci	uCi/mL
K West Basin Sludge Materials												
Am-241	There is no K West Floor Sludge		There is no K West Weasel Pit/Tech View/Dummy Pit Sludge		4.83E+00	1.07E+00	7.13E+02	2.38E+02	1.31E+03	4.09E+02	2.03E+03	1.90E+02
Bi-212					0.00E+00	0.00E+00	0.00E+00	0.00E+00	0.00E+00	0.00E+00	0.00E+00	0.00E+00
Ce-144/Pr					0.00E+00	0.00E+00	3.26E+01	1.09E+01	5.98E+01	1.87E+01	9.24E+01	8.64E+00
Cm243/244					0.00E+00	0.00E+00	3.08E+01	1.03E+01	5.63E+01	1.76E+01	8.71E+01	8.14E+00
Co-60					9.87E-01	2.19E-01	4.06E+02	1.35E+02	7.45E+02	2.33E+02	1.15E+03	1.08E+02
Cs-134					0.00E+00	0.00E+00	1.34E+02	4.47E+01	2.46E+02	7.69E+01	3.80E+02	3.55E+01
Cs-137					4.46E+01	9.91E+00	3.50E+04	1.17E+04	6.42E+04	2.01E+04	9.92E+04	9.28E+03
Eu-152					0.00E+00	0.00E+00	2.66E+00	8.87E-01	4.90E+00	1.53E+00	7.56E+00	7.07E-01
Eu-154					9.87E-01	2.19E-01	3.33E+02	1.11E+02	6.10E+02	1.91E+02	9.44E+02	8.82E+01
Eu-155					5.42E-01	1.20E-01	8.41E+01	2.80E+01	1.54E+02	4.81E+01	2.39E+02	2.23E+01
Nb-94					0.00E+00	0.00E+00	0.00E+00	0.00E+00	0.00E+00	0.00E+00	0.00E+00	0.00E+00
Np-237					0.00E+00	0.00E+00	1.59E-01	5.30E-02	2.92E-01	9.13E-02	4.51E-01	4.21E-02
Pu-238					9.58E-01	2.13E-01	2.92E+02	9.73E+01	5.38E+02	1.68E+02	8.31E+02	7.77E+01
Pu-239/240					5.84E+00	1.30E+00	8.61E+02	2.87E+02	1.58E+03	4.94E+02	2.45E+03	2.29E+02
Ra-226					0.00E+00	0.00E+00	0.00E+00	0.00E+00	0.00E+00	0.00E+00	0.00E+00	0.00E+00
Ru-106/Rh					0.00E+00	0.00E+00	4.31E+01	1.44E+01	7.90E+01	2.47E+01	1.22E+02	1.14E+01
Sb-125					0.00E+00	0.00E+00	1.85E+02	6.17E+01	3.38E+02	1.06E+02	5.23E+02	4.89E+01
Sr-90					0.00E+00	0.00E+00	2.78E+04	9.27E+03	5.08E+04	1.59E+04	7.86E+04	7.35E+03
Tl-208					0.00E+00	0.00E+00	0.00E+00	0.00E+00	0.00E+00	0.00E+00	0.00E+00	0.00E+00
Y-90					0.00E+00	0.00E+00	2.78E+04	9.27E+03	5.08E+04	1.59E+04	7.86E+04	7.35E+03
Pu-241					0.00E+00	0.00E+00	1.83E+04	6.10E+03	3.35E+04	1.05E+04	5.18E+04	4.84E+03
Ba-137					4.22E+01	9.38E+00	3.33E+04	1.11E+04	6.10E+04	1.91E+04	9.43E+04	8.82E+03
Volume, m^3	0		0		4.5		4.3		3.2		10.7	

Table 7.2. Chemical Composition of K Basin Sludge Materials

Sludge Type	Floor		Pits		N. Loadout		Canister		Fuel Wash		Bulk Sludge	
Analyte	kg	ug/mL	kg	ug/mL	kg	ug/mL	kg	ug/mL	kg	ug/mL	kg	ug/mL
K East Basin Sludge Mterials												
Ag	9.80E-01	3.77E+01	5.54E-01	3.77E+01	0.00E+00	0.00E+00	0.00E+00	0.00E+00	0.00E+00	0.00E+00	1.53E+00	2.61E+01
Al	1.52E+03	5.85E+04	8.63E+02	5.87E+04	3.63E+01	4.84E+03	4.57E+00	6.18E+02	6.78E+00	2.12E+03	2.43E+03	4.13E+04
B	1.99E+01	7.65E+02	1.13E+01	7.69E+02	0.00E+00	0.00E+00	1.73E-03	2.34E-01	2.41E-03	7.53E-01	3.12E+01	5.31E+02
Ba	1.47E+01	5.65E+02	8.29E+00	5.64E+02	4.85E-01	6.47E+01	0.00E+00	0.00E+00	0.00E+00	0.00E+00	2.35E+01	3.99E+02
Be	6.86E-01	2.64E+01	3.57E-01	2.43E+01	3.53E-02	4.71E+00	4.46E-01	6.03E+01	6.50E-01	2.03E+02	2.17E+00	3.70E+01
Ca	8.61E+02	3.31E+04	4.86E+02	3.31E+04	2.75E+01	3.67E+03	0.00E+00	0.00E+00	0.00E+00	0.00E+00	1.37E+03	2.34E+04
Cd	1.99E+00	7.65E+01	1.12E+00	7.62E+01	2.49E-01	3.32E+01	1.61E-03	2.17E-01	2.41E-03	7.53E-01	3.36E+00	5.72E+01
Cr	4.97E+01	1.91E+03	2.81E+01	1.91E+03	5.98E-01	7.97E+01	7.78E-01	1.05E+02	1.15E+00	3.59E+02	8.03E+01	1.37E+03
Cu	2.46E+01	9.46E+02	1.39E+01	9.46E+02	1.26E+00	1.68E+02	4.45E-01	6.01E+01	6.60E-01	2.06E+02	4.09E+01	6.95E+02
Fe	1.36E+04	5.23E+05	7.67E+03	5.22E+05	1.09E+02	1.45E+04	2.47E+00	3.34E+02	3.75E+00	1.17E+03	2.14E+04	3.64E+05
K	6.60E+01	2.54E+03	3.73E+01	2.54E+03	0.00E+00	0.00E+00	0.00E+00	0.00E+00	0.00E+00	0.00E+00	1.03E+02	1.76E+03
Mg	1.25E+02	4.81E+03	7.08E+01	4.82E+03	3.46E+00	4.61E+02	1.48E-01	2.00E+01	2.25E-01	7.03E+01	2.00E+02	3.40E+03
Mn	2.56E+01	9.85E+02	1.45E+01	9.86E+02	1.50E+00	2.00E+02	1.61E-01	2.17E+01	2.40E-01	7.50E+01	4.20E+01	7.14E+02
Na	3.87E+02	1.49E+04	4.23E+01	2.88E+03	1.97E+00	2.63E+02	8.15E-03	1.10E+00	1.20E-02	3.75E+00	4.31E+02	7.33E+03
Pb	2.81E+01	1.08E+03	1.59E+01	1.08E+03	4.20E-01	5.60E+01	4.08E-02	5.51E+00	6.05E-02	1.89E+01	4.45E+01	7.57E+02
Se	9.80E+00	3.77E+02	5.54E+00	3.77E+02	0.00E+00	0.00E+00	3.21E-03	4.34E-01	4.65E-03	1.45E+00	1.53E+01	2.61E+02
Sm	9.80E+00	3.77E+02	5.54E+00	3.77E+02	0.00E+00	0.00E+00	1.73E-02	2.34E+00	0.00E+00	0.00E+00	1.54E+01	2.61E+02
Tl	1.96E+01	7.54E+02	1.11E+01	7.55E+02	0.00E+00	0.00E+00	0.00E+00	0.00E+00	0.00E+00	0.00E+00	3.07E+01	5.22E+02
Zn	5.43E+01	2.09E+03	3.07E+01	2.09E+03	1.07E+00	1.43E+02	0.00E+00	0.00E+00	0.00E+00	0.00E+00	8.61E+01	1.46E+03
Zr	2.76E+01	1.06E+03	1.56E+01	1.06E+03	0.00E+00	0.00E+00	3.95E+02	5.34E+04	5.90E+02	1.84E+05	1.03E+03	1.75E+04
U	1.11E+04	4.27E+05	1.11E+03	7.55E+04	4.72E+01	6.29E+03	5.64E+03	7.63E+05	8.38E+03	2.62E+06	2.63E+04	4.47E+05
Residue*	2.10E+03	8.08E+04	2.41E+03	1.64E+05	0.00E+00	0.00E+00	0.00E+00	0.00E+00	0.00E+00	0.00E+00	4.51E+03	7.67E+04

Table 7.2. Chemical Composition of K Basin Sludge Materials

Sludge Type	Floor		Pits		N. Loadout		Canister		Fuel Wash		Bulk Sludge	
Analyte	kg	ug/mL	kg	ug/mL	kg	ug/mL	kg	ug/mL	kg	ug/mL	kg	ug/mL
KWest Basin Sludge Mterials												
Ag	There is no K West Floor Sludge		There is no K West Weasel Pit/Tech View/Dummy Pit Sludge		0.00E+00	0.00E+00	0.00E+00	0.00E+00	0.00E+00	0.00E+00	0.00E+00	0.00E+00
Al					2.18E+01	4.84E+03	3.70E+00	1.23E+03	6.78E+00	2.12E+03	3.23E+01	3.02E+03
B					0.00E+00	0.00E+00	1.31E-03	4.37E-01	2.41E-03	7.53E-01	3.72E-03	3.48E-01
Ba					2.91E-01	6.47E+01	0.00E+00	0.00E+00	0.00E+00	0.00E+00	2.91E-01	2.72E+01
Be					2.12E-02	4.71E+00	3.54E-01	1.18E+02	6.50E-01	2.03E+02	1.03E+00	9.58E+01
Ca					1.65E+01	3.67E+03	0.00E+00	0.00E+00	0.00E+00	0.00E+00	1.65E+01	1.54E+03
Cd					1.50E-01	3.33E+01	1.31E-03	4.37E-01	2.41E-03	7.53E-01	1.54E-01	1.44E+01
Cr					3.59E-01	7.98E+01	6.25E-01	2.08E+02	1.15E+00	3.59E+02	2.13E+00	1.99E+02
Cu					7.55E-01	1.68E+02	3.61E-01	1.20E+02	6.60E-01	2.06E+02	1.78E+00	1.66E+02
Fe					6.52E+01	1.45E+04	2.04E+00	6.80E+02	3.75E+00	1.17E+03	7.10E+01	6.63E+03
K					0.00E+00	0.00E+00	0.00E+00	0.00E+00	0.00E+00	0.00E+00	0.00E+00	0.00E+00
Mg					2.08E+00	4.62E+02	1.21E-01	4.03E+01	2.25E-01	7.03E+01	2.43E+00	2.27E+02
Mn					9.00E-01	2.00E+02	1.31E-01	4.37E+01	2.40E-01	7.50E+01	1.27E+00	1.19E+02
Na					1.18E+00	2.62E+02	6.56E-03	2.19E+00	1.20E-02	3.75E+00	1.20E+00	1.12E+02
Pb					2.52E-01	5.60E+01	3.30E-02	1.10E+01	6.05E-02	1.89E+01	3.46E-01	3.23E+01
Se					0.00E+00	0.00E+00	2.53E-03	8.43E-01	4.65E-03	1.45E+00	7.18E-03	6.71E-01
Sm					0.00E+00	0.00E+00	0.00E+00	0.00E+00	0.00E+00	0.00E+00	0.00E+00	0.00E+00
Tl					0.00E+00	0.00E+00	0.00E+00	0.00E+00	0.00E+00	0.00E+00	0.00E+00	0.00E+00
Zn					6.45E-01	1.43E+02	0.00E+00	0.00E+00	0.00E+00	0.00E+00	6.45E-01	6.03E+01
Zr					0.00E+00	0.00E+00	3.22E+02	1.07E+05	5.90E+02	1.84E+05	9.12E+02	8.52E+04
U					2.83E+01	6.29E+03	4.56E+03	1.52E+06	8.38E+03	2.62E+06	1.30E+04	1.21E+06
Residue*					0.00E+00	0.00E+00	0.00E+00	0.00E+00	0.00E+00	0.00E+00	0.00E+00	0.00E+00

Table 7.3. Radionuclide Composition of Worst-Case Shipment of K Basin Sludge

Radionuclide	Solids Composition, Ci/L of as-settled solids[a]	Basin Water Composition, Ci/L of water	Composition of As-shipped Sludge, Ci/L[b]
Am-241	1.3E-01	7.8E-07	1.3E-01
Bi-212	0.0E+00	2.4E-05	1.7E-05
Ce-144/Pr	2.2E-02	8.1E-02	7.9E-02
Cm243/244	6.8E-03	7.8E-07	6.8E-03
Co-60	5.2E-02	5.4E-04	5.2E-02
Cs-134	1.5E-02	6.6E-04	1.6E-02
Cs-137	5.0E+00	3.9E-02	5.0E+00
Eu-152	3.7E-04	8.8E-06	3.8E-04
Eu-154	4.7E-02	1.9E-03	4.8E-02
Eu-155	1.3E-02	2.0E-03	1.4E-02
Nb-94	0.0E+00	5.5E-04	3.9E-04
Np-237	2.6E-05	4.5E-07	2.6E-05
Pu-238	5.1E-02	2.0E-07	5.1E-02
Pu-239/240	1.4E-01	2.0E-07	1.4E-01
Ra-226	0.0E+00	1.5E-02	1.0E-02
Ru-106/Rh	2.0E-02	1.0E-02	2.7E-02
Sb-125	2.7E-02	5.9E-06	2.7E-02
Sr-90	3.8E+00	7.4E-05	3.8E+00
Tl-208	0.0E+00	2.0E-05	1.4E-05
Y-90	3.8E+00	7.4E-05	3.8E+00
Pu-241	2.8E+00	0.0E+00	2.8E+00
Ba-137m	4.7E+00	7.4E-05	4.69E+00
U-233[c]	7.3E-05	1.6E-09	7.3E-05
U-234	4.0E-04	8.5E-09	4.0E-04
U-235	1.2E-05	2.6E-10	1.2E-05
U-236	2.5E-05	5.2E-10	2.5E-05
U-238	2.6E-04	5.5E-09	2.6E-04

(a) The worst-case solids composition was determined to be fuel wash sludge.
(b) Assumed to be shipped as 30 vol% fuel wash solids and 70 vol% basin water.
(c) Uranium isotopic compositions were calculated from uranium masses given in Table 7.5. The mass fractions of each isotope were calculated based on the isotopic mass fractions derived from characterization data in Makenas et al. (1996).

Table 7.4. Radionuclide Composition of Bulk Sludge (K East and K West)

Radionuclide	Solids Composition, Ci/L of as-settled solids[a]	Basin Water Composition, Ci/L of water	Composition of Bulk Sludge + Basin Water, Ci/L[b]
Am-241	4.9E-02	7.8E-07	1.5E-02
Bi-212	0.0E+00	2.4E-05	1.6E-05
Ce-144/Pr	4.7E-03	8.1E-02	5.8E-02
Cm243/244	2.3E-03	7.8E-07	6.9E-04
Co-60	2.4E-02	5.4E-04	7.7E-03
Cs-134	7.7E-03	6.6E-04	2.8E-03
Cs-137	2.2E+00	3.9E-02	6.8E-01
Eu-152	1.7E-04	8.8E-06	5.6E-05
Eu-154	2.1E-02	1.9E-03	7.5E-03
Eu-155	5.3E-03	2.0E-03	3.0E-03
Nb-94	0.0E+00	5.5E-04	3.9E-04
Np-237	1.0E-05	4.5E-07	3.4E-06
Pu-238	2.0E-02	2.0E-07	5.9E-03
Pu-239/240	5.6E-02	2.0E-07	1.7E-02
Ra-226	0.0E+00	1.5E-02	1.0E-02
Ru-106/Rh	4.8E-03	1.0E-02	8.6E-03
Sb-125	1.2E-02	5.9E-06	3.5E-03
Sr-90	1.7E+00	7.4E-05	5.1E-01
Tl-208	0.0E+00	2.0E-05	1.4E-05
Y-90	1.7E+00	7.4E-05	5.1E-01
Pu-241	1.2E+00	0.0E+00	3.5E-01
Ba-137m	2.1E+00	7.4E-05	6.2E-01
U-233[c]	4.3E-05	1.6E-09	1.3E-05
U-234	2.3E-04	8.5E-09	7.0E-05
U-235	7.0E-06	2.6E-10	2.1E-06
U-236	1.4E-05	5.2E-10	4.3E-06
U-238	1.5E-04	5.5E-09	4.5E-05

(a) Radionuclide composition of homogenized mixture of all K East and K West Basin sludges.

(b) Assumed to be shipped as 30 vol% fuel wash solids and 70 vol% basin water.

(c) Uranium isotopic compositions were calculated from uranium masses given in Table 7.5. The mass fractions of each isotope were calculated based on the isotopic mass fractions derived from characterization data in Makenas et al. (1996).

Table 7.5. Chemical Analyte Concentrations in Worst-case K Basin Sludge

Analyte	As-Settled Sludge Composition, g/L[a]	Basin Water Composition, g/L	Composition of As-shipped Sludge, g/L[b]
Ag	3.8E-02	2.0E-04	1.1E-02
Al	5.8E+01	1.5E-03	1.8E+01
B	7.7E-01	1.7E-03	2.3E-01
Ba	5.7E-01	1.0E-03	1.7E-01
Be	2.6E-02	1.0E-04	8.0E-03
Ca	3.3E+01	2.7E-02	1.0E+01
Cd	7.7E-02	2.0E-04	2.3E-02
Cr	1.9E+00	3.0E-04	5.7E-01
Cu	9.5E-01	2.0E-04	2.8E-01
Fe	5.2E+02	1.0E-03	1.6E+02
K	2.5E+00	0.0E+00	7.6E-01
Mg	4.8E+00	2.0E-03	1.4E+00
Mn	9.9E-01	2.0E-04	3.0E-01
Na	1.5E+01	5.4E-02	4.5E+00
Pb	1.1E+00	2.0E-03	3.3E-01
Se	3.8E-01	0.0E+00	1.1E-01
Sm	3.8E-01	2.0E-03	1.1E-01
Tl	7.5E-01	4.0E-03	2.3E-01
Zn	2.1E+00	3.4E-04	6.2E-01
Zr	1.1E+00	2.0E-04	3.2E-01
U	4.3E+02	2.0E-02	1.3E+02
Residue[c]	8.1E+01	0.0E+00	2.4E+01
CN^-	1.3E-03	5.5E-05	4.4E-04
$SO4^{-2}$	2.4E-05	1.6E-02	1.1E-02
$PO4^{-3}$	2.4E-05	3.3E-03	2.3E-03
$NO3^-$	3.5E-05	2.2E-03	1.6E-03
$NO2^-$	1.4E-05	1.9E-03	1.3E-03
Cl^-	1.7E-05	6.2E-04	4.4E-04
F^-	1.1E-06	2.9E-04	2.0E-04
$NH3^+$	7.5E-05	5.0E-03	3.5E-03
PCB	3.0E-03	0.0E+00	5.0E-04

PCB = Polychlorinated biphenyl

(a) The worst-case solids composition was determined to be fuel wash sludge.

(b) Assumed to be shipped as 30 vol% fuel wash solids and 70 vol% basin water.

(c) Residue assumed to be sand or SiO_2.

Table 7.6. Chemical Analyte Composition of Bulk Sludge (K East and K West)

Analyte	K-East As-settled Solids Composition, g/L[a]	K West As-settled Solids Composition, g/L	Composition of Bulk Sludge + Basin Water, g/L[b]
Ag	2.6E-02	0.0E+00	6.7E-03
Al	4.1E+01	3.0E+00	1.1E+01
B	5.3E-01	3.5E-04	1.4E-01
Ba	4.0E-01	2.7E-02	1.0E-01
Be	3.7E-02	9.6E-02	1.4E-02
Ca	2.3E+01	1.5E+00	6.0E+00
Cd	5.7E-02	1.4E-02	1.5E-02
Cr	1.4E+00	2.0E-01	3.6E-01
Cu	6.9E-01	1.7E-01	1.8E-01
Fe	3.6E+02	6.6E+00	9.2E+01
K	1.8E+00	0.0E+00	4.4E-01
Mg	3.4E+00	2.3E-01	8.7E-01
Mn	7.1E-01	1.2E-01	1.9E-01
Na	7.3E+00	1.1E-01	1.9E+00
Pb	7.6E-01	3.2E-02	1.9E-01
Se	2.6E-01	6.7E-04	6.6E-02
Sm	2.6E-01	0.0E+00	6.8E-02
Tl	5.2E-01	0.0E+00	1.3E-01
Zn	1.5E+00	6.0E-02	3.7E-01
Zr	1.7E+01	8.5E+01	8.4E+00
U	4.5E+02	1.2E+03	1.7E+02
Residue[c]	7.7E+01	0.0E+00	1.9E+01
TOC	1.4E+00	1.4E+00	4.3E-01
CN^-	1.3E-03	1.3E-03	4.4E-04
$SO4^{-2}$	2.5E-05	2.5E-05	1.1E-02
$PO4^{-3}$	2.5E-05	2.5E-05	2.3E-03
$NO3^-$	3.5E-05	3.5E-05	1.6E-03
$NO2^-$	1.4E-05	1.4E-05	1.3E-03
Cl^-	1.7E-05	1.7E-05	4.4E-04
F^-	1.1E-06	1.1E-06	2.0E-04
$NH3^+$	7.5E-05	7.5E-05	3.5E-03
PCB	3.0E-03	3.0E-03	8.9E-04

PCB = Polychlorinated biphenyl TOC = Total organic carbon

(a) Chemical composition of homogenized mixture of all K East and K West Basin sludges..

(b) Assumed to be shipped as 30 vol% fuel wash solids and 70 vol% basin water.

(c) Residue assumed to be sand or SiO_2.

Table 7.7. Toxic Chemical Screening Information[a]

Analyte	Likely Chemical Form or Compound(s) in Basic pH formed by addition of NaOH	Screening Results
NO_3^-	$NaNO_3$	Not listed by ACGIH or NIOSH; common household chemical; not acute inhalation hazard.
NO_2^-	$NaNO_2$	Not listed by ACGIH or NIOSH; common household chemical; not acute inhalation hazard.
PO_4^{-3}	Na_3PO_4, $BiPO_4$, $AlPO_4$	Not listed in ACGIH or NIOSH.
F^-	NaF, HF, LaF_3, metal fluorides	Fluorides not acute inhalation hazard; generally toxic via ingestion pathway; compounds generally stable; hydrolysis of F^- to HF not expected in sludge.
Al	$Al(OH)_3$, $AlPO_4$, $NaAl(OH)_4$, $Al_2(CO_3)_3$	None of the Al compounds listed in WHC (1996c) were toxic via inhalation
Ca	$Ca(OH)_2$, $CaCO_3$	Commonly used and encountered chemicals; much less toxic than NaOH.
Cd	$Cd(OH)_2$	Yes. Suspect carcinogen.
Cr	Two valence forms, +3, +6. $Cr(NO_3)_3$, Na_2CrO_4, $Cr(OH)_3$	Yes. Many chromium compounds are acute inhalation hazard; include Cr in the chemical consequence analysis.
Cu	$Cu(OH)_2$	Yes.
Fe	$Fe(OH)_3$, $Fe_2(CO_3)_3$, Fe metal	No. Not listed in ACGIH or NIOSH.
K	KNO_3	No. Not listed in ACGIH or NIOSH.
Mg	$Mg(OH)_2$, $MgCO_3$	No. Not listed in ACGIH or NIOSH.
Mn	MnO_2	No. Not an acute inhalation hazard.
Na	NaOH, $NaAlSi_2O_4$, $NaNO_3$, $NaNO_2$, Na_2SO_4	Yes. NaOH also covers OH^-. Other compounds not listed in ACGIH or NIOSH. $NaNO_3$ and $NaNO_2$ addressed above.

Analyte	Likely Chemical Form or Compound(s) in Basic pH formed by addition of NaOH	Screening Results
PCB	Arochlor-1254, -1258, -1262	Yes.
Pb	$Pb(OH)_2$	No. Inorganic lead does not exhibit acute exposure health effects.
Zn	$Zn(OH)_2$	No. Not listed in ACGIH or NIOSH.
Zr	NaZrO	No. Not very toxic. Other chemicals will dominate health effects.
Ag	Ag_2O	No. Chronic but not acute inhalation hazard.
B	Na_2BO_3, $Na_2B_4O_7$	No. Not listed in ACGIH or NIOSH. Common household chemical.
Ba	Ba metal, $Ba(OH)_2$, $BaCO_3$, $Ba(NO_3)_2$	Yes.
Be	Be metal, $Be(OH)_2$, Na_2BeO_2	Yes. Suspect carcinogen.
Se	Se metal, Na_2SeO_4, SeO_2, SeO_4	Yes.
Sm	Sm metal, compounds	No. Not listed in ACGIH or NIOSH.
Tl	$NaTl(OH)_4$, Tl metal, $Tl(OH)_3$	Yes.
CN^-	NaCN, HCN, FeCN	No. Compounds quickly destroyed by radiolysis; free cyanide and HCN should not be present under tank conditions.
Total organic carbon (TOC)	Many.	Yes. Irritant and toxic.
SO_4^{-2}	Na_2SO_4, Na_2SO_3,	No. Not listed in ACGIH or NIOSH; common household chemicals, food additives.
U	U metal, insoluble U compounds	Yes. Listed in NIOSH and ACGIH for toxic reasons (heavy metal poisoning).
Cl^-	NaCl	No. Common table salt; not hazardous.
NH_3^+	NH_3 NH_4NO_3	Yes. Alkaline drives NH_3 into vapor spaces. Toxic. Ammonium nitrate not listed by ACGIH or NIOSH.

Analyte	Likely Chemical Form or Compound(s) in Basic pH formed by addition of NaOH	Screening Results
OH^-	Free hydroxide ion.	Yes. Covered by NaOH.

The following abbreviations were used in Table 7.5:
ACGIH = American Conference of Government Industrial Hygienists
NIOSH = National Institute of Occupational Safety and Health
(a) Based on WHC-SD-WM-SARR-011, Rev. 2, Appendix A (WHC 1996c).

Table 7.8. Toxic Chemical Concentrations in Worst-Case K Basin Sludge Shipment

Analyte	Concentration g/L[a]	Analyte	Concentration g/L[a]	Analyte	Concentration g/L[a]
Ammonia (NH_3)	3.52E-03	Barium (Ba soluble)	1.70E-01	Beryllium (Be)	7.99E-03
Cadmium (Cd)	2.31E-02	Chromium (Cr^{+3}, Cr^{+6} sol.)	5.74E-01	Copper (Cu)	2.84E-01
Polychlorinated biphenyl (PCB)	8.94E-04	Selenium (Se)	1.13E-01	Sodium hydroxide (NaOH)	4.47E+00
Thallium (Tl)	2.29E-01	Uranium (U insol.)	1.28E+02		

(a) Shipment consists of 30% K Basin fuel wash sludge and 70% K Basin water.

Unit Dose Calculations for K Basin Sludge Releases

Unit dose values were developed to represent the onsite and offsite radiological doses and toxic exposures from a unit release (liters or liters/sec) of K Basin sludge. Derivation of the radiological and chemical unit doses are described in the following paragraphs.

Radiological Unit Dose. The radiological unit dose represents the 50 year effective dose commitment to the onsite and offsite MEIs from a release of one liter of K Basin sludge. The GENII computer code was used to develop these values, based on the input parameters and assumptions described in previous sections. The source compositions given in Tables 7.4 and 7.5 were input to the computer code to determine the unit doses. The code was implemented using 200 Area joint-frequency data (Schreckhise et al. 1993) and the direction and distance to the maximum exposed onsite and offsite individuals was specified (see above). GENII then performed the atmospheric dispersion, uptake, and

exposure calculations to derive the expected radiological dose from a release of 1 liter of sludge. Credit was then taken for plume meander but not building wake effects as indicated in WHC-SD-WM-SARR-016 (WHC 1996b). Also, as discussed previously, adjustments were made to the GENII-calculated Unit doses to incorporate the atmospheric dispersion coefficients developed in WHC (1996b). The resulting unit doses are shown in Table 7.9.

For the purposes of comparing the radiological hazards of K Basin sludge and DST wastes, a Unit Liter Dose (ULD) was calculated for sludge and compared to similarly-derived ULDs for DST wastes (see WHC-SD-WM-SARR-016 and WHC-SD-WM-SARR-037). Note that the ULDs are different than the unit sludge doses shown in Table 7.9 as the ULDs do not include transport and uptake of the radionuclides. The ULDs were calculated by multiplying the radionuclide concentrations in Table 7.5 (worst-case shipment of sludge) by their corresponding dose conversion factors (Sv/Bq) after appropriate units conversions and then summing across the radionuclides. Dose conversion factors for inhalation were taken from EPA (1988). The resulting sludge ULDs were 5.49E+08 Rem/L for as-settled solids, 1.63E+05 Rem/L for liquids (i.e., Basin water), and 1.65E+08 Rem/L for composite solids and liquids at 30% as-settled solids. For DST wastes, the corresponding values are 5.3E+07, 6.1E+05, and 1.8E+07 Rem/L, respectively. It can be seen that the ULDs for sludge solids and composite solid/liquids are higher than their DST waste couterparts and the sludge liquids ULD is smaller than the ULD for DST liquids. The corresponding ULDs for bulk sludge are 6.5E+07, 6.1E+05, and 2.0E+05 Rem/L, respectively, which are not much different than DST waste ULDs.

Toxic and Corrosive/Irritant Chemical Unit Dose. The unit doses for toxic chemical releases was calculated using different techniques than the radiological unit doses. For a continuous release of solid or liquid toxic or corrosive/irritant materials, the peak concentration should be calculated using the following equation:

$$C = Q' \times \frac{\chi}{Q'}$$

where: C = Peak concentration, mg/m^3
Q' = Toxic material release rate, mg/sec
χ/Q' = Continuous release atmospheric dispersion coefficient, sec/m^3.

The puff release χ/Q' should be used for an instantaneous release of solid or liquid toxic materials. The following equation is used to calculate the peak concentration for an instantaneous release of solid or liquid toxic material:

$$C = Q \times \frac{\chi}{Q}$$

where: C = Peak concentration, mg/m^3
Q = Toxic material released, mg
χ/Q = Puff release atmospheric dispersion coefficient, m^{-3}

Offsite and onsite peak concentrations of each chemical listed in Table 7.8 were calculated for both puff and continuous releases. Separate calculations were performed for chemicals that are considered

Table 7.9. Radiological Unit Doses for Release of K Basin Sludge

Receptor	MEI Location	Unit Liter Dose, Rem/L[a]	
		Without plume meander[b]	With plume meander [c]
Maximum Inventory Sludge (i.e., fuel wash sludge)			
Onsite	100 m east	2.0E+03	6.7E+02
Offsite	8,760 m north	1.6E+00	1.2E+00
Bulk Sludge (Combined K East and K West Basin sludge materials)			
Onsite	100 m east	1.5E+02	4.9E+01
Offsite	8,760 m north	1.2E-01	9.0E-02

(a) 50 year CEDE
(b) Use for short duration releases (less than 1 hr)
(c) Use for release durations from 1 to 24 hrs.

to be toxic and those that are considered corrosive/irritant materials. Toxics and corrosives may be considered separately because the chemicals act independently and in different ways (WHC 1996c). Next, the peak concentrations were divided by the appropriate risk evaluation guidelines (PEL-TWA, ERPG-1, EPRG-2, and ERPG-3) to calculate chemical-specific fractions of the guidelines. The sum of these fractions represents the unit dose, which is unitless. However, as long as the product of the release quantity (L) and the sum of fractions is less than 1.0, the toxic chemical exposure consequences would be below the risk evaluation guidelines. The values for the chemical-specific risk guidelines were taken from WHC (1996c). The unit dose values calculated in this manner are dependent on the accident frequency because the risk evaluation guidelines vary by frequency category. Therefore, the reciprocals of the unit doses provide an estimate of the maximum release quantities or release rates that would limit the toxic chemical exposures to below the guideline for that frequency category. The toxic chemical unit doses, risk evaluation guidelines, sum of fractions, and maximum release information are presented in Table 7.10. The spreadsheet used to calculate the values in the table is presented in Appendix D.

7.2 DESIGN BASIS ACCIDENT ANALYSIS

This section presents the detailed analyses of the design basis accidents identified in Chapter 6. Separate subsections are provided for each of the design basis accidents. Each subsection includes an analysis of the frequencies and consequences of each accident scenario. Mitigated as well as unmitigated accident scenarios are addressed in each section. A comparison of the frequencies and consequences of each accident scenario is then made to the risk evaluation guidelines. In addition, each section lists the key parameters used and assumptions made in the frequency and consequence quantification process. Finally, each subsection addresses safety class SSCs and potential TSR controls.

Table 7.10. Toxic Chemical Unit Doses and Maximum Release Quantities and Release Rates

	Fraction of Risk Guidelines, Steady-state release			Fraction of Risk Guidelines, Puff Release		
	Antici-pated	Unlikely	Extremely Unlikely	Antici-pated	Unlikely	Extremely Unlikely
Corrosives and Irritants, Onsite Receptor						
Ammonia (NH3)	2.61E-01	1.31E-02	5.22E-03	7.54E-02	3.77E-03	1.51E-03
Barium (Ba metal)	8.54E-01	4.21E-02	1.69E-02	2.47E-01	1.22E-02	4.88E-03
Chromium (Cr^{+3} metal)	7.52E+00	3.80E-01	1.52E-01	2.17E+00	1.10E-01	4.38E-02
Sodium hydroxide	7.68E+01	3.84E+00	1.54E+00	2.22E+01	1.11E+00	4.44E-01
TOC	4.57E-03	9.14E-04	2.74E-04	1.32E-03	2.64E-04	7.92E-05
Sum of Fractions	8.54E+01	4.27E+00	1.71E+00	2.47E+01	1.23E+00	4.94E-01
Allowable Release	1.2E-02	2.3E-01	5.8E-01	4.1E-02	8.1E-01	2.0E+00
Units	Liters per second			Liters		
Toxic Chemicals, Onsite Receptor						
Beryllium (Be metal)	4.54E+01	1.09E+01	2.72E+00	1.31E+01	3.15E+00	7.87E-01
Cadmium (Cd metal)	3.94E+00	7.88E-01	7.88E-02	1.14E+00	2.28E-01	2.28E-02
Copper (Cu metal)	3.23E+00	1.94E+00	3.87E-01	9.32E-01	5.59E-01	1.12E-01
Selenium (Se metal)	1.93E+01	9.64E+00	1.93E+00	5.57E+00	2.78E+00	5.57E-01
Thallium (Tl metal)	2.60E+01	3.90E+00	3.90E-01	7.52E+00	1.13E+00	1.13E-01
Uranium (U metal)	4.37E+03	4.37E+02	2.18E+02	1.26E+03	1.26E+02	6.31E+01
PCBs	2.03E-02	1.22E-02	6.10E-03	5.87E-03	3.52E-03	1.76E-03
Sum of Fractions	4.42E+03	4.52E+02	2.21E+02	1.28E+03	1.31E+02	6.39E+01
Allowable Release	2.3E-04	2.2E-03	4.5E-03	7.8E-04	7.7E-03	1.6E-02
Units	Liters per second			Liters		

	Fraction of Risk Guidelines, Steady-state release			Fraction of Risk Guidelines, Puff Release		
	Antici-pated	Unlikely	Extremely Unlikely	Antici-pated	Unlikely	Extremely Unlikely
Corrosives and Irritants, Offsite Receptor						
Ammonia (NH3)	2.17E-04	2.17E-04	1.08E-05	8.73E-07	8.73E-07	4.36E-08
Barium (Ba metal)	9.64E-03	7.09E-04	3.49E-05	3.88E-05	2.86E-06	1.41E-07
Chromium (Cr^{+3} metal)	3.25E-02	6.24E-03	3.15E-04	1.31E-04	2.52E-05	1.27E-06
Sodium hydroxide	6.37E-02	6.37E-02	3.19E-03	2.57E-04	2.57E-04	1.28E-05
TOC	4.55E-06	3.79E-06	7.58E-07	1.83E-08	1.53E-08	3.06E-09
Sum of Fractions	1.06E-01	7.09E-02	3.55E-03	4.27E-04	2.86E-04	1.43E-05
Allowable Release	9.4E+00	1.4E+01	2.8E+02	2.3E+03	3.5E+03	7.0E+04
Units	Liters per second			Liters		
Toxic Chemicals, Offsite Receptor						
Beryllium (Be metal)	1.13E-01	3.77E-02	9.04E-03	4.55E-04	1.52E-04	3.64E-05
Cadmium (Cd metal)	1.31E-01	3.27E-03	6.54E-04	5.27E-04	1.32E-05	2.63E-06
Copper (Cu metal)	8.04E-03	2.68E-03	1.61E-03	3.24E-05	1.08E-05	6.47E-06
Selenium (Se metal)	1.60E-02	1.60E-02	8.00E-03	6.45E-05	6.45E-05	3.22E-05
Thallium (Tl metal)	6.48E-02	2.16E-02	3.24E-03	2.61E-04	8.70E-05	1.31E-05
Uranium (U metal)	1.81E+01	3.62E+00	3.62E-01	7.30E-02	1.46E-02	1.46E-03
PCBs	5.06E-05	1.69E-05	1.01E-05	2.04E-07	6.79E-08	4.08E-08
Sum of Fractions	1.82E+01	3.67E+00	3.75E-01	7.34E-02	1.48E-02	1.51E-03
Allowable Release	5.5E-02	2.7E-01	2.7E+00	1.4E+01	6.8E+01	6.6E+02
Units	Liters per second			Liters		

7.2.1 Transfer Line Spray Leaks

The accident scenario addressed in this section is one where a leak occurs in the flowpath between the transfer pump on the Sludge Transportation System and the nozzle of the slurry distributor in the tank. This would include spray leaks from the transfer pump, connectors, and lines associated with the Sludge Transportation System as well as the connectors, lines, and jumper associated with the Sludge Receiving Station. A spray leak from these components would lead to a loss of containment of K Basin sludge during an offload operation. Such a scenario could occur as a result of component failures and human errors associated with the offloading system or by failures caused by a seismic event.

Figures 3.3 and 3.4 illustrate the assumed preliminary layout for the Sludge Receiving Station for the accident analysis. From this layout, the schematic of Figure 7.2 has been constructed to provide the functional diagram for the transfer system accident analysis. As shown, it consists of the following 11 components in series from the sludge transportation container to the DST inlet nozzle feeding directly into DST AW-105:

- A connector between the transportation container and the first double flex hose,
- A double flex hose from the transportation container (via the connector) to the Transfer Pump (via the connector),
- A connector between the first double flex hose and the Transfer Pump,
- The Transfer Pump between the first and second double flex hoses (via the connectors),
- A connector between the Transfer Pump and the second double flex hose,
- A double flex hose between the Transfer Pump and the hose in pipe (via the connectors),
- A connector between the second double flex hose and the hose in pipe,
- A hose in pipe between the second double flex hose (via the connector) and the Transfer Valve,
- A Transfer Valve between the double pipe and the third double flex hose (via the connector),
- A double flex hose between the Transfer Valve and the DST Inlet Nozzle (via the connector),
- A connector between the third double flex hose and the DST Inlet Nozzle.

The Transfer Line of the Sludge Receiving Station thus consists of five connectors, three double flex hoses, a transfer pump, a hose in pipe, a jumper, and a transfer valve. The operator(s) and supervisor responsible for assembling and ensuring the integrity of the Transfer Line will be trained in advance and follow a written procedure and checklist.

The Transfer Line is provided with an automatic Leak Detection/Suppression System. It is assumed to remove power from the Transfer Pump via a circuit breaker upon detection of a leak anywhere along the Transfer Line. A conductivity probe will serve as the sensor, which will be connected to the circuit breaker via electrical wiring. Thus, for the accident analysis, the Leak Detection/Suppression system is modeled as consisting of a conductivity probe, circuit breaker, and connecting wires.

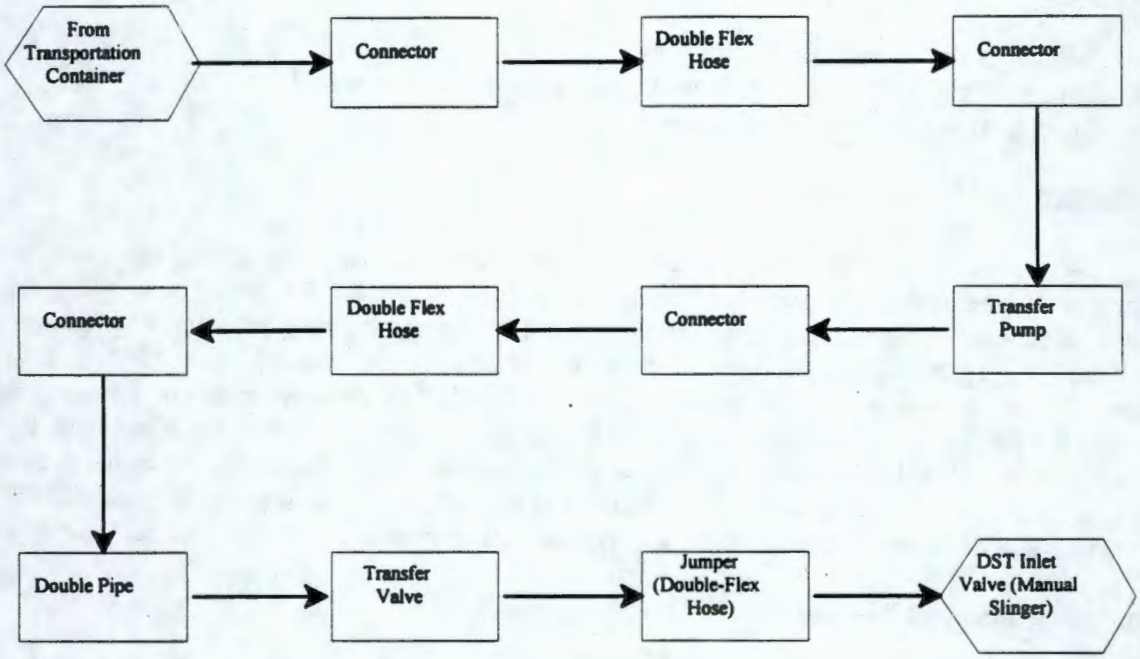

Figure 7.2. Schematic of the Sludge Receiving Station

7.2.1.1 Scenario Development

As discussed above, spray leaks may result from failures of the transfer system caused by a seismic event or by random failures of a hardware or human component of the transfer system. The total frequency of a spray leak scenario was postulated to be the sum of the frequencies of a moderate hazard seismic event and component/human failure events. The model that was developed to calculate the frequency of hardware/human failures leading to a spray release are discussed in this section. The frequency of a seismic event that could lead to failure of a connection and subsequent spray release is addressed later in this section.

A leak of the Transfer Line occurs if any of the 11 components leaks, or if improper assembly by the operators (including failure to properly verify) compromises the integrity at one of the connections. Thus, there is a common-cause failure mode consisting of improper assembly AND verification error, and the following independent failure modes:

- Leak of any of five connectors
- Leak of any of three double flex hoses
- Leak of the Transfer Pump
- Leak of the hose in pipe
- Leak of the Transfer Valve

A failure of Leak Detection/Suppression occurs via any of following:

- Failure of the circuit breaker to open,
- Failure of the conductivity probe (to sense a leak),
- Short to power of connecting wires.

Unmitigated Accident Scenario

For the unmitigated accident scenario, a connector, joint, gasket, or seal in the transfer line or pump is postulated to leak. A release of sludge in the form of a spray results. The unmitigated spray leak was assumed to continue for up to 30 min. to reflect the approximate pumping time required to empty the shipping container. Resuspension releases were assumed to continue an additional 30 minutes for a total release duration of 1 hr. This is different than the release duration assumptions used in the TWRS BIO (LMHC 1997) of 12 hr exposure to the onsite receptor and 24 hr for the offsite receptor. This difference is appropriate given the much shorter pumping times for K Basin sludge and the fact that the K Basin sludge transfer operations will be continuously manned, leading to a much higher likelihood that a failure will be detected immediately and the transfer shut down.

Unmitigated Accident Frequency

The unmitigated accident scenario frequency is the sum of the hardware/human failure event frequency and the seismic event frequency. These are discussed separately below. The total unmitigated spray release frequency is provided at the end of this subsection.

Hardware/Human Failure Events

The primary data sources from which a representative set of failure probability distributions for the components and common-cause human error have been assembled are as follows:

- Pelto, P., et al. 1982. *Analysis of LNG Peakshaving Facility Release Prevention Systems*. PNL−4153, Pacific Northwest (National) Laboratory, Hanford Site, Richland, Washington;
- Benhardt, H., et al. 1994. *Savannah River Site Human Error Data Base Development for Non-Reactor Nuclear Facilities*. WSRC−TR−93−581, Westinghouse Savannah River Co., Savannah River Site, Aiken, South Carolina;
- Dexter, A., and W. Perkins. 1982. *Component Failure-Rate Data with Potential Applicability to a Nuclear Fuel Reprocessing Plant*. DP−1633, E.I. du Pont de Nemours & Co., Savannah River Laboratory, Aiken, South Carolina;
- Green, A., and A. Bourne. 1972. *Reliability Technology*. Wiley-Interscience, New York, New York.

The "raw" data for transfer line leak are as follows:

- Connectors (pneumatic) have a failure rate for leak of 1.48E−06/hr (no range given), based on DP−1633;
- Hoses have a failure rate for leak ranging from 4.0E−06/hr (lightly stressed) to 4.0E−05/hr (heavily stressed), based on *Reliability Technology*;
- Pumps have a failure rate for leak ranging from 1E−06/hr to 1E−08/hr, based on PNL−4153;

- Pipes have a failure rate for leak of 2E−07/hr (no range given), based on *Reliability Technology;*

- Valves have a failure rate for leak ranging from 1E−09/hr to 1E−07/hr, based on PNL−4153;
- Human miscalibration has a "low" type failure probability (i.e., for a two-person team with an operator check) that is lognormally distributed with a mean of 0.003 and an error factor of 10, based on WSRC−TR−93−581 (a miscalibration has been deemed the closest approximation to an assembly error from the WSRC−TR−93−581 data and will be used to represent this type of error, henceforth referred to as an "assembly error");
- Supervisor verification has a "low" type failure probability (i.e., with a check-off sheet and low dependence) that is lognormally distributed with a mean of 0.1 and an error factor of 3, based on WSRC−TR−93−581.

These failure data have been corroborated with others deemed applicable and have been judged representative for this analysis.

Following accepted practice in failure probability analysis, those failure rates not already defined as lognormally distributed have been assumed to be lognormally distributed, with median values given either by the provided point estimate (e.g., 1.48E−06/hr for a connector) or calculated as the geometric mean (square root of the product) of the given lower and upper range values (e.g., $\{[4.0E-06/hr][4.0E-05/hr]\}^{1/2}$ = 1.26E−05/hr for a hose). This yields the following median failure rates:

- Connector = 1.48E−06/hr
- Hose = 1.26E−05/hr
- Pump = 1.00E−07/hr
- Pipe = 2.00E−07/hr
- Valve = 1.00E−08/hr.

Since both the double flex hose and hose in pipe require leaks of two components to lose integrity, the median failure rate will lie somewhere between that for a single failure and that for two independent failures. An engineering rule-of-thumb applicable to this situation involves approximating the probability of a common-cause failure of "n" identical components as the individual failure probability raised to the square root of "n". Thus, for the double flex hose and hose in pipe, the following median failure rates result:

$$\text{Double flex hose} = (1.26E-05/hr)^{\sqrt{2}} = 1.18E-07/hr$$

$$\text{Double pipe} = (2.00E-07/hr)^{\sqrt{2}} = 3.36E-10/hr$$

Assuming an error factor of 10 (90%, two-sided confidence level) for all but the supervisor verification error (which has an error factor of 3 [90%, two-sided confidence level]), the following lognormal parameters have been estimated for the failures:

FAILURE	MEDIAN	MEAN	STD DEV
Connector Leak	1.48E−06/hr	3.94E−06/hr	9.73E−06/hr
Double Flex Hose Leak	1.18E−07/hr	3.14E−07/hr	7.76E−07/hr
Transfer Pump Leak	1.00E−07/hr	2.66E−07/hr	6.58E−07/hr
Hose in Pipe Leak	3.36E−10/hr	8.95E−10/hr	2.21E−09/hr
Transfer Valve Leak	1.00E−08/hr	2.66E−08/hr	6.58E−08/hr
Assembly Error	1.13E−03	3.00E−03	7.43E−03
Verification Error	8.00E−02	1.00E−01	7.50E-02

It was assumed that, nominally, the transfer rate from the Sludge Transportation System will be 50 gpm (0.2 m^3/min; the pump is sized to transfer at 150 gpm but a lower nominal rate was assumed for conservatism). Therefore, a minimum of about 30 min will be required for the actual pumping operation. Allowing for variations, one hour seems a reasonably conservative assumption for the pumping time per transfer operation. Given Transfer Line leak as defined earlier, any of the following could lead to loss of sludge containment during a transfer:

- Leak of any of five connectors
- Leak of any of three double flex hoses
- Leak of the Transfer Pump
- Leak of the hose in pipe
- Leak of the Transfer Valve
- Common-cause assembly AND verification error

Therefore, the mean probability of failure for a one-hour transfer operation has been approximated as

$$\begin{aligned}\text{Transfer Line Leak} &= [5(3.94\text{E}-06/\text{hr}) + 3(3.14\text{E}-07/\text{hr}) + 2.66\text{E}-07/\text{hr} + \\ &\quad 8.95\text{E}-10/\text{hr} + 2.66\text{E}-08/\text{hr}](1\ \text{hr}) + \\ &\quad (3.00\text{E}-03)(1.00\text{E}-01) \\ &= (2.09\text{E}-05/\text{hr})(1\ \text{hr}) + 3.00\text{E}-04 \\ &= 3.21\text{E}-04/\text{transfer}.\end{aligned}$$

The common-cause human error contributes over 90% (3.00E−04/transfer) to this overall probability of Transfer Line Leak. Even if the pumping time were doubled to two hours, the overall probability of failure would rise only to 3.42E−04/transfer, with the common-cause human error still contributing nearly 90%. Thus, the probability of Transfer Line leak appears fairly insensitive to mission time.

Using the lognormal parameters defined above for the component failures and human errors, the results from a 10,000-trial computer simulation for Transfer Line leak have been compared to the lognormal distribution formed from the product of the common-cause assembly and verification error lognormals, after increasing the approximate mean ([3.00E−03][1.00E−01] = 3.00E−04/transfer)

by 10% to (1.1)(3.00E−04) = 3.30E−04/transfer. This increase permits bounding of the probability distribution for Transfer Line leak at the higher frequencies using just one lognormal distribution. Results indicate that assuming Transfer Line leak is lognormally distributed with a mean of 3.30E−04, standard deviation of 1.05E−03, median of 9.94E−05, and error factor of 12.8 (all derived from the product of human error lognormals) yields a simple and conservative approximation at upper values to the simulated distribution using all the component failures and human errors. This should be expected since the common-cause human error dominates the overall probability.

The probability of an unmitigated release during pumping is just that for a Transfer Line leak, approximately governed by a lognormal distribution for the combined common-cause human errors. As calculated above, the mean probability of an unmitigated release for a one-hour pumping time is 3.30E−04/transfer. Given the corresponding median of 9.94E−05/transfer and error factor of 12.8, a 95%, one−sided, upper confidence limit of (12.8)(9.94E−05) = 0.00127/transfer results. For approximately 40 total shipments over a one year period, the respective mean and 95% upper bound are approximately (40/yr)(3.30E−04) = 0.013/yr and (40/yr)(0.00127) = 0.051/yr. Both lie within the Anticipated frequency category.

A sensitivity evaluation was performed to examine the effects of the component failure rates used in the unmitigated accident frequency analysis. It was assumed that, during latter transfers in a long series of transfers, the non-human failure rates worsen by a factor of 10 due to component aging or other degradation mechanism. For the Transfer Line leak, the mean probability of failure rises approximately to:

$$
\begin{aligned}
\text{Transfer Line Leak} &= [5(3.94\text{E}-05/\text{hr}) + 3(3.14\text{E}-06/\text{hr}) + 2.66\text{E}-06/\text{hr} + \\
&\quad 8.95\text{E}-09/\text{hr} + 2.66\text{E}-07/\text{hr}](1\ \text{hr}) + \\
&\quad (3.00\text{E}-03)(1.00\text{E}-01) \\
&= (2.09\text{E}-04/\text{hr})(1\ \text{hr}) + 3.00\text{E}-04 \\
&= 5.09\text{E}-04/\text{transfer}.
\end{aligned}
$$

The contribution from the component failures (2.09E-04) is no longer negligible compared to that from the common-cause human error (3.00E-04). The governing probability distribution for Transfer Line leak no longer is covered by the 10% increase in the product of the common-cause human error lognormals. It is necessary to determine this governing distribution by simulation. The 10,000-trial computer simulation predicts a 95%, one-sided, upper confidence limit of 0.00149/transfer. For a total of ~40 transfers annually, the mean becomes (40/yr)(5.09E-04) = 0.02/yr and the upper limit is bounded by (40/yr)(0.00149) = 0.06/yr. Both lie within the Anticipated frequency category.

Seismic Event Frequency

The seismic event frequency used in this assessment is based on the design seismic event for a moderate hazard facility. At Hanford, this translates to a 0.12 g seismic event that has a mean recurrence interval of 1000 yr (annual frequency of 1E-03/yr - see Chapter 5).

Total Unmitigated Spray Release Frequency

The total unmitigated spray release frequency is the sum of the seismic event frequency and hardware/human failure event frequencies calculated above. Based on these data, the unmitigated spray release accident scenario has been assigned to the Anticipated frequency category.

Mitigated Accident Scenario

The mitigated frequency of spray leaks was assumed to be the same as the unmitigated frequency, or Anticipated. No credit was taken for preventive measures. Credit is taken for suppression of the spray leak by the pump pit cover blocks, shielding placed over the fixed portion of the Sludge Receiving Station, and plastic bags placed over the flexible hose connections. However, this mitigates the consequences but has no effect on the frequency of spray leaks.

The leak detection and pump shutoff capabilities were not credited in the mitigated accident frequency analysis because of uncertainty about the response time for conductivity-type leak detection probes. Since it would take an unknown amount of time to accumulate sufficient liquid to activate the conductivity probe, the leak detection system was not credited in the mitigated frequency analysis.

Mitigated Accident Frequency

As discussed above, the frequency of the mitigated spray leak scenario is Anticipated.

7.2.1.2 Source Term Analysis

The release scenario modeled here postulates that there is a break in the transfer system that results in a liquid spray. The consequences would be the same for a seismic-event-induced spray release and a hardware/human failure event. The methodology described in WHC-SD-WM-CN-048, Rev. 1 (Hall 1996a) was followed here to estimate the consequences of a spray leak. Appropriate adjustments were made to reflect K Basin sludge offloading system parameters as opposed to the modeled tank farm transfer system parameters (Hall 1996a).

Unmitigated Source Term

Spray release accidents represent an efficient way to generate aerosols which can be transported large distances and impact potential health of exposed individuals. These spray leaks can result in significant exposures since a fraction of the aerosol generated is in the respirable particle size range.

The SPRAY model (WHC 1994) was used to calculate the flowrate and particle size distribution of the aerosols generated in the unmitigated spray release. SPRAY determines the total leak rate and aerosol particle size distribution based on the dimensions of the orifice or crack that emits the spray, fluid pressure, fluid viscosity, and fluid density. The SPRAY code has a subroutine to iteratively solve for the orifice diameter or crack width that produces the maximum flow rate of aerosols below a requested size. This mode of running the SPRAY code was employed here.

For this preliminary safety assessment, several SPRAY runs were made with varying viscosity and density values for K Basin sludge material to bracket the potential release quantities. The input parameters, including the ranges used for sludge viscosity and density, and the sources or bases for these parameters are provided in Table 7.11. Note that many of the parameters are representative of 2-in. diameter Schedule 40 pipe.

Table 7.11. Parameters Used in SPRAY Code Calculations

Parameter	Value	Source or Basis
Starting particle size, μm	10	Hall 1996a
Initial slit width, in.	0.01	Hall 1996a
Slit length, in.	2	Hall 1996a
Slit or orifice depth, in.	0.154	Hall 1996a
Reynold's number	2000	Hall 1996a. Code solves for this value.
Differential pressure, psi	150	See Chapter 3
Absolute surface roughness, in.	0.0018	Hall 1996a; value for steel
Contraction coefficient	1	Hall 1996a; value for steel
Velocity coefficient	0.82	Hall 1996a; value for square edge orifice
Fluid density, g/cm^3	1.5 - 2.3	Bergsman 1997
Dynamic viscosity, cp	1, 5, 20	Estimated range
Respirable diameter, μm	15	Hall 1996a. Incorporates particle size reduction resulting from evaporation.
Ambient density, g/cm^3	0.00122	Hall 1996a
Wind speed, m/s	1	Hall 1996a

The results of the SPRAY calculations are presented in Table 7.12. As shown, a total of 6 cases are summarized in the table, made by varying across three assumed fluid viscosities and two fluid densities. The largest applicable values, highlighted in the table, were used in subsequent calculations. These were determined to be 3.35 gpm aerosol release rate and 0.025 gpm respirable release rate. The release duration was assumed to be equivalent to pumping time for the sludge transfer or about 30 minutes. Thus, for a 30 minute release, a total of 2.84 L (0.75 gal) of respirable-size particles will be released.

Mitigated Source Term

As was done for the unmitigated source term, the method used to calculate the mitigated source term for K Basin sludge spray leaks was taken from Hall (1996a). It was assumed that cover blocks, shielding, and/or plastic covers will be placed over all connections between the shipping container and tank before a transfer is started. This prevents jetting of the fluid directly to the environment and also provides a stagnant air volume in which agglomeration or rainout of particles would be enhanced. The aerosols released to the environment would also be reduced by the tortuous path the particles would have to follow to penetrate the cover blocks, shielding, or plastic covers.

Table 7.12. SPRAY Code Results

Case	Fluid density, g/cm^3	Dynamic viscosity, cp	Optimum crack width, in.	Aerosol leak rate, gpm	Respirable aerosol leak rate, gpm	Respirable fraction
1	1.5	1	4.5E-03	1.65	0.0158	0.0096
2	1.5	5	3.6E-03	1.68	0.025	0.0152
3	1.5	20	7.1E-02	3.35	0.0036	0.0011
4	2.3	1	4.4E-03	1.32	0.0094	0.0071
5	2.3	5	3.2E-03	1.20	0.0184	0.0153
6	2.3	20	6.4E-03	2.43	0.0026	0.0011

The air expelled from pump pits or other covered locations would be limited in aerosol concentration to the quasi-stable aerosol loading limit of 100 mg/m^3 (Hall 1996a). This material was assumed to be expelled through gaps or openings in the covers. The mechanisms for expelling aerosols include temperature/humidity increases resulting from the spray leak and displacement of the aerosol by liquid. The quantities of material released via these mechanisms are calculated in the following paragraphs.

Temperature and Humidity Increase

Psychrometric charts were consulted to estimate the volumetric change of the air in the AW-105 pump pit due to increased temperature and humidity. The temperature and pressure in the pit would increase from 30°F and 15% relative humidity (RH) to 120°F and 100% RH (Hall 1996a). The specific volume of air at 30°F and 15% RH is 12.35 ft^3/lb and at 120°F and 100% RH the specific volume is 16.7 ft^3/lb. This results in a volumetric expansion of 0.35 pit volumes. The dimensions of the AW-105 valve pit are about 16 ft x 10 ft x 5 ft, resulting in a released volume of about 7.9 m^3 (280 ft^3) of air containing aerosolized contaminants from the pit.

Liquid Displacement

As the spray leak continues, the pump pit will begin to fill with liquid, further displacing the air in the pit and forcing additional aerosol through the gaps and openings in the cover block. The largest flowrate from the crack was shown in Table 7.12 to be 0.76 m^3/hr (3.35 gpm). It was assumed that the liquid spilling into the pit would displace air at this rate.

Total Release Quantities

The total release quantity would be the sum of the respirable aerosol release from volumetric expansion and liquid displacement. The volume of air expelled from the pit by these mechanisms is then multiplied by the 100 mg/m^3 aerosol loading limit to determine the equivalent mass of K Basin

sludge released in the accident. This is converted to the equivalent volume of sludge using the range of sludge density values (1.5 to 2.3 g/cm^3) given in Table 7.11.

The release varies as a function of time. For the first hour after the spray leak occurs, volumetric expansion and liquid displacement occur. For the remainder of the release duration, only the liquid displacement mechanism is in effect as the temperature and humidity are assumed to stabilize in the first hour.

Actual pumping times for typical tank farm waste transfers may be several hours, far longer than the 30 minute pumping time estimated for K Basin sludge transfers. Allowing for volumetric expansion of up to 1 hr and pumping time of 0.5 hr, the equivalent volume of sludge released in the mitigated accident scenario is:

$$Q = [7.9\ m^3 + (0.76\ m^3/hr)(0.5\ hr)](100\ mg/m^3)(1\ L/1.5E{+}06\ mg)$$
$$= 5.5E{-}04\ L$$

If the high density value (2.3 g/cm^3) was substituted into the formula, a total release of 3.6E-04 L was calculated. Thus, the lower density value is the more conservative case.

7.2.1.3 Consequence Analysis

The consequences of the spray release were calculated as the product of the source term and the unit dose values presented in Table 7.9. The unit doses for short-duration releases (i.e., with plume meander) were used in the calculations. The mitigated and unmitigated consequences of the radioactive material release are presented in Table 7.13 and for hazardous chemicals released are presented in Table 7.14. Note that the consequences over the first hour were calculated using the unit dose for short-duration exposures (atmospheric dispersion coefficient without plume meander) and for the rest of the release were calculated using the longer-duration unit doses. These results do not include direct radiation exposures to a pool of liquid that could form as a result of the spray release. This is because the direct exposures to the pool are negligible in comparison to the inhalation and resuspension consequences of the spray release. Direct exposures to pools are included in the next section that addresses the consequences of pipe breaks that rapidly depressurize the transfer system and result in pool formation but not a significant spray release. Comparison to the risk evaluation guidelines are also presented in Tables 7.13 and 7.14.

Key Parameters and Assumptions--Unmitigated Accident Analysis

The key variables in the unmitigated accident analysis are described below:

- The frequency of transfer system spray releases was developed without taking credit for leak detection and suppression capabilities. Failures of containment boundaries, most likely to occur at seals or flanges, were the components modeled in the unmitigated accident frequency analysis.

- Component failure rates for equipment under similar operating conditions were used where available. Generic component failure rates from the literature were used elsewhere.

Table 7.13. Radiological Spray Leak Consequences and Comparison to Risk Evaluation Guidelines

Scenario	Frequency Category	Analysis Result	Radiological Dose to Receptor (rem)	
			Onsite	Offsite
Unmitigated	Anticipated	Consequence	5,700	4.5
		Risk Guideline	5	0.5
		Comparison	ABOVE	ABOVE
Mitigated	Anticipated	Consequence	1.10	8.8E-04
		Risk Guideline	5	0.5
		Comparison	BELOW	BELOW

Table 7.14. Hazardous Chemical Spray Release Consequences and Comparison to Guidelines

Scenario	Frequency Category	Analysis Result	Release Quantity[a]	
			Onsite	Offsite
Unmitigated	Anticipated	Consequence	1.6E-03 L/sec 2.8 L	1.6E-03 L/sec 2.8 L
		Corrosives Guidelines	1.2E-02 L/sec 4.1E-02 L	9.4E+00 L/sec 2.3E+03 L
		Toxics Guidelines	2.3E-04 L/sec 7.8E-04 L	5.5E-02 L/sec 1.4E+01 L
		Comparison - Corrosives - Toxics	 ABOVE ABOVE	 BELOW ABOVE
Mitigated	Anticipated	Consequence	3.1E-07 L/sec 5.5E-04 L	3.1E-07 L/sec 5.5E-04 L
		Corrosives Guidelines	1.2E-02 L/sec 4.1E-02 L	9.4E+00 L/sec 2.3E+03 L
		Toxics Guidelines	2.3E-04 L/sec 7.8E-04 L	5.5E-02 L/sec 1.4E+01 L
		Comparison	BELOW BELOW	BELOW BELOW

(a) The results and guidelines are presented in terms of the allowable release rate in L/sec (continuous release) and release quantity in L (puff release), as described in Section 7.1.

- Failure rates for the containment boundary components (pipes, pumps, and valves) that lead to spray releases were assumed to be representative of the failure rates of seals, flanges, and connectors between transfer system components.

- Component failure rates were assumed to be lognormally distributed.

- It was assumed that the spray leak consequences would be dominated by the aerosol release; external doses from potential pool formation were assumed to be negligible relative to the inhalation doses from the aerosol release.

Key Parameters and Assumptions–Mitigated Accident Analysis

The key variables in the mitigated accident analysis are described below:

- Credit was not taken for the leak detection system in developing the frequency or consequences of the mitigated accident scenario.

- Written operating procedures with verification were assumed to be in place.

- Mitigation of the spray leak was assumed to be provided by the pump pit cover blocks, concrete shielding over the fixed pipeline portion of the tank farm offloading system, portable shielding over the flexible hose that connects the Sludge Transportation System to the Sludge Receiving Station, and plastic bags over the flexible hose connectors.

7.2.1.4 Comparison with Guidelines

The comparisons to the risk evaluation guidelines were presented in Tables 7.13 (radiological) and 7.14 (hazardous chemical). The onsite and offsite radiological exposures calculated for the unmitigated spray leak scenario were found to be above the risk guidelines. The radiological exposures are below guidelines in the mitigated scenario. The onsite MEI chemical consequences were shown to be above the risk evaluation guidelines for releases of toxic and corrosives/irritant chemicals for the unmitigated accident scenario but were below guidelines for the mitigated accident. The unmitigated consequences to the offsite MEI were found to be above guidelines for toxic chemical releases but below guidelines for corrosives/irritants. The mitigated toxic and corrosive consequences were below guidelines for both onsite and offsite MEIs.

7.2.1.5 Summary of Safety-Class SSCs and TSR Controls

Safety SSCs

Safety classification of Systems, Structures, and Components are addressed in Chapter 8.

TSR Controls

Credit was taken in the mitigated accident analysis for operators following appropriate written procedures with verification and for the mitigation of consequences by ensuring placement of pump pit cover blocks, concrete shielding over the fixed transfer lines, and plastic bags or covers over the flexible hose connectors. Controls requiring appropriate written operating procedures and trained

operators are required elements of this transfer. Procedures and training requirements are part of the TWRS safety programs described in Chapter 9. The procedures should provide the operators with information on how to establish the connections required to complete the transfer line flow path, how to verify the connection is leak tight, and how to test the connection prior to commencing sludge offload activities. It would also be prudent to require operators to complete a pressure test of the transfer system prior to beginning the sludge transfer operation. This would provide verification that all connections are made appropriately. The operators should also be provided with spill stabilization capabilities to respond to a leak should one occur during a transfer.

A control, such as a Limiting Condition for Operation (LCO) or Administrative Control (AC), should be established to ensure the offload system connectors are properly covered prior to initiating K Basin sludge offloading. This is the single most important control for this accident scenario.

Defense in Depth

Defense in depth items are addressed in Chapter 8.

7.2.2 Transfer System Ruptures/Pool Release

This section describes the accident analysis for transfer line failures that lead to a pool release of K Basin sludge material.

7.2.2.1 Scenario Development

In this scenario, the transfer system fails abruptly, causing rapid depressurization of the system. Examples of events that could cause this would include double-ended guillotine pipe break or severe rupture of the transfer pump or a valve. This is somewhat different than the analysis of spray leaks described previously in that transfer system maintains pressure during the spray leak, which would most likely occur at a flange or seal, contributing to the driving force that aerosolizes the released material. In the pool release scenario, the released material is not under pressure so it will fall by gravity to the ground and form a liquid pool. Onsite and offsite exposures would result from radioactive and hazardous chemical materials resuspended from the liquid pool and from direct radiation emitted from the pool and from splashing and splattering effects.

Unmitigated Accident Scenario

This accident scenario is very similar to the spray release scenario addressed in Section 7.2.1. In summary, it was postulated that a severe failure of the transfer system occurs while sludge is being pumped from the shipping container to the DST. "Severe" refers to the magnitude of the failure, which was assumed to rapidly depressurize the transfer system. After the system is depressurized, the sludge was assumed to flow out the failed component (pumping may continue to force material out of the system or it may flow out via gravity) and form a pool on the ground. No credit was taken for leak detection or suppression nor for leak collection provided by the spill retention basin.

Unmitigated Accident Frequency

The frequency of the unmitigated pool release scenario was judged to be within the uncertainty of the spray release scenario frequency. Therefore, the unmitigated frequency of the pool release scenario was estimated to be Anticipated. This included consideration of both seismic-induced ruptures of the transfer system and ruptures caused by random hardware failures and human errors, as discussed in Section 7.2.1.1. This is consistent with the frequency assigned in LMHC (1997).

Mitigated Accident Scenario

Mitigation measures that could be applied to this accident scenario include the leak detection and suppression capabilities included on the Sludge Transportation System and the Sludge Receiving Station, the spill retention basin, and the placement of pump pit cover blocks to retain aerosols formed in the pump pit. Leak detection may occur as a result of operator observations of the failure or pool, actuation of leak detection instrumentation between the inner and outer containment boundaries, or actuation of area radiation alarms. Leak suppression consists of automatic or manual shutdown of the transfer pump. Due to uncertainties in the effectiveness of the leak detection system to rapidly detect and isolate leakage, no credit was taken for this system. A spill retention basin, located beneath the trailer, would collect spills in this area, preventing the released material from forming a pool on the ground. The spill retention basis is sized to accommodate the entire contents of the Sludge Transportation System. Nominally, the volume of the basin is 28 m^3 (7500 gal.). However, this system was not credited in the unmitigated accident analysis. The pipe rupture may also occur in or drain into the AW-105 pump pit, in which case the leaked material would accumulate in the pump pit. The volume of this pit, about 23 m^3 or 800 ft^3, is substantially larger than the 6 m^3 capacity of the Sludge Transportation System and thus would not overflow even if the entire contents of the Sludge Transportation System were to empty into the pit. Placement of the pump pit cover blocks would ensure the release quantities would be minimal. Therefore, for the mitigated accident analysis, it was assumed that the leakage would be collected in the spill retention basin for the purpose of estimating consequences.

Mitigated Accident Frequency

The frequency of the mitigated pipe rupture accident scenario is the same as the unmitigated scenario as no credit is being taken for systems or controls that would reduce the likelihood of a pipe rupture. Credit is being taken for mitigation of consequences by the spill retention basin but this does not affect the frequency analysis. Therefore, the frequency of the mitigated accident scenario is Anticipated.

7.2.2.2 Source Term Analysis

A severe break or rupture in the transfer system was postulated to result in formation of a pool of liquid on the ground surface. This section estimates the spill quantities, liquid pool size, and exposures resulting from the transfer system rupture.

Unmitigated Accident Source Term

The source term for the transfer system rupture event consists of two main elements: 1) aerosols formed by splattering of sludge on the ground and resuspension of radioactive and hazardous

chemical materials from a pool formed as a result of the transfer system rupture; and 2) direct exposures to penetrating radiation emitted from the surface of the pool. The source terms, or release quantities, for these elements are calculated in this subsection. The methods and relevant data from the TWRS BIO (LMHC 1997) and supporting calculation notes (Hall 1996b) were used in this assessment.

The unmitigated source term resulting from the transfer system rupture event was assumed to consist of the entire contents of the Sludge Transportation System, or 6 m^3. The released material was assumed to fall onto the ground and then form a pool and soak into the ground. Material would be aerosolized via splashing and splattering effects as well as resuspension from the liquid pool and resuspension from the contaminated soil after the material soaks into the ground. The releases from each of these phenomena are calculated in the following paragraphs.

Release Due Splashing and Splattering: Sludge flowing out an opening in a pipeline or nozzle will splatter off the ground or an intervening piece of equipment if present. DOE-HDBK-3010-94 (DOE 1994) gives splatter release fractions for free fall spills of slurries (3 m fall distance) that were based on actual experiments. The bounding respirable release fraction (DOE 1994) was 5E-04. This release fraction was applied to the entire contents of the shipping container as follows:

$$Q \text{ (splatter effects)} = (6m^3)(1000\ L/m^3)(4E\text{-}05) = 0.24\ L$$

This would occur during the first 10 minutes of the accident, based on releasing the entire contents of the container at a maximum flow rate of 150 gpm. At a nominal flow rate of 50 gpm, this would occur during the first 30 minutes of the accident.

Release Due to Resuspension from Liquid Pool Formed on the Ground: The spilled sludge was assumed to form a pool on the ground surface until the Sludge Transportation System is empty. Aerosols will be resuspended from the surface of the pool due to ripple/wave action. The release from the liquid pool was calculated using a resuspension flux of 2E-10 kg/m^2 -sec (DOE 1994 and Hall 1996b). This flux is applied to the surface area of the pool to determine the release rate. The area of the pool was calculated using a spreading factor of 8.7/ft calculated by Hall (1996b) from an actual tank waste spill. The area of the liquid spill is then:

$$\text{Area} = (6m^3)(35.31\ ft^3/m^3)(8.7/ft) = 1844\ ft^2$$

Assuming the pool forms a circular area (Hall 1996b), the radius of the pool is:

$$\begin{aligned} \text{Radius of spill} &= (\text{Spill area}/\pi)^{1/2} \\ &= (1844\ ft^2/\pi)^{1/2} \\ &= 24\ ft\ (7.4\ m) \end{aligned}$$

Next, the resuspension flux was converted to a volumetric basis using the low end of the sludge density range (i.e., 1.5 g/cm^3) for conservatism. The volumetric resuspension flux is therefore 1.3E-10 L/m^2-sec. The resuspension flux varies with time and was thus applied to the average spill area or one-half the maximum area, 922 ft^2 (86 m^2). The resuspension release rate from the pool surface is then:

$$\text{Resuspension Rate} = (1.3E\text{-}10\ L/m^2\text{-sec})\ (86\ m^2) = 1.1E\text{-}08\ L/sec$$

The total resuspension release is the product of the resuspension rate and the length of time the liquid surface pool exists. It was assumed that the pool area would grow the entire time that liquid continues to spill from the broken transfer system. For conservatism, this was doubled so the total time available for this release mechanism is twice the nominal pumping time or approximately 60 minutes ([1585 gal ÷ 50 gpm] * 2 ≈ 60 minutes). Therefore, the total respirable release quantity is:

$$Q \text{ (resuspension from pool)} = (1.1E\text{-}08 \text{ L/sec})(60 \text{ min})(60 \text{ sec/min}) = 4E\text{-}05 \text{ L}$$

Resuspension from Contaminated Soil: After the shipping container is empty and the flow of sludge stopped, the waste will soak into the ground. As the soil dries out, the contamination on the surface is subject to resuspension by wind blowing across the soil. The respirable release fraction for resuspension from contaminated soil surfaces was assumed to be 8.4E-05 over a 24 hr time period (DOE 1994 and Hall 1996b). Applying this release fraction to the 6 m^3 released from the spill, the resuspension release from the soil surface is:

$$Q \text{ (resuspension from soil)} = (6 \text{ m}^3)(1000 \text{ L/m}^3)(8.4E\text{-}05) = 0.50 \text{ L}$$

Total Unmitigated Release: The total unmitigated release quantity is the sum of the release quantities from splash/splatter effect, resuspension from the liquid pool, and resuspension from the soil surface. Therefore, the total respirable release quantity is:

$$\begin{aligned} Q \text{ (total)} &= Q \text{ (splatter)} + Q \text{ (resuspension from pool)} + Q \text{ (resuspension from soil)} \\ &= 0.24 \text{ L} + 4E\text{-}05 \text{ L} + 0.50 \text{ L} \\ &= 0.74 \text{ L} \end{aligned}$$

Mitigated Accident Source Term

The mitigated source term was calculated assuming the aerosols generated by the leaking sludge is suppressed by the shielding and earth cover over the fixed transfer line, plastic bags or covers over the flexible line and connections, and then drains into and is contained within the AW-105 pump pit or the spill retention basin of the Sludge Receiving Station. These components effectively prevent splattering and splash effects as well as formation of a pool on the ground surface (the pump pit and spill retention basin are larger than the volume of sludge in the shipping container). Therefore, the only mechanism for generating aerosols that become released to the atmosphere is resuspension from a liquid pool inside either the pump pit or spill retention basin. The release from this mechanism was calculated using the resuspension flux from a liquid pool calculated previously (i.e., 1.3E-10 L/m^2-sec) and the surface area of the spill retention basis, which is larger than the pool that would form in the pump pit and maximizes the release quantity. The surface area of the spill retention basin is about 54 m^2 based on dimensions of 11 ft 9 in x 49 ft 3 in (see Chapter 3). Therefore, the release quantity over a 24 hr period was calculated as follows:

$$\begin{aligned} Q \text{ (resuspension from basin)} &= (1.3E\text{-}10 \text{ L/m}^2\text{-sec})(54 \text{ m}^2) \\ &= 7.0E\text{-}09 \text{ L/sec } (24 \text{ hr})(60 \text{ min/hr})(60 \text{ sec/min}) \\ &= 6E\text{-}04 \text{ L} \end{aligned}$$

7.2.2.3 Consequence Analysis

The consequences of the pool release of K Basin sludge are delivered to the MEIs in two ways: 1) direct radiation from the pool surface, and 2) exposure to airborne material resuspended from the pool of liquid. The contributions from these two elements are calculated separately below. The total consequences are the sum of the direct radiation dose and the dose from resuspension.

Direct Radiation Dose

The direct radiation dose from the pool of spilled liquid was calculated using the MICROSHIELD Version 5.01 and MICROSKYSHINE Version 1.17 computer codes (Grove Engineering 1996 and 1992, respectively). MICROSHIELD calculates the direct line-of-sight radiation dose rate and MICROSKYSHINE calculates the skyshine (reflected) radiation dose rate. Further information on these computer codes can be found in the references cited above. Input parameters used in the calculations are shown in Table 7.15. Note that the direct radiation dose rate from the surface pool was calculated only for the onsite MEI. Since direct radiation dose decreases as the square of the distance from the source and since the offsite MEI is located at such a large distance from the source and would be shielded by numerous intervening topographical features and structures, the external dose would be negligible.

The results of the external dose rate calculations from the surface pool are as follows. First, MICROSHIELD calculated a line-of-sight dose rate with buildup of 52.73 millirem/hr for the unmitigated release. This was increased by 14% to 60.11 millirem/hr to account for Bremsstrahlung radiation as indicated in Table 7.15. The corresponding dose calculated by MICROSKYSHINE for the reflected radiation dose was 245.8 millrem/hr. This was increased to 302.3 millirem/hr to accout for Bremsstrahlung radiation. Therefore, the total dose rate for the onsite MEI was the sum of these or about 362.4 millirem/hr. The line-of-sight, skyshine, and total external radiation dose rate for the mitigated accident scenario were negligible, as the material would drain to the spill retention basin or pump pit and not form a pool on the ground surface.

The total effective dose equivalent received by the onsite MEI is the product of the calculated dose rate and the amount of time that the onsite MEI would be exposed. For this assessment, the onsite MEI was assumed to be exposed to the external radiation emitted from the pool for an entire 8-hr shift plus 4 hr overtime for a total of 12 hr. This is different than the 1-hr exposure duration for the aerosolized materials. In 2 hr, the aerosolized material will pass the receptor and no further exposure from this pathway occurs. However, the onsite worker may remain at the location for an additional time and would receive direct exposures for the entire time at this location. Therefore, the total Effective Dose Equivalent (EDE) for the unmitigated release was calculated to be 362.4 millirem/hr * 12 hr = 4,348 millirem (4.35 Rem).

Resuspension

It was postulated that the radioactive and hazardous chemical materials in the spilled sludge becomes airborne via suspension of liquid material from the spilled pool. Material continues to be resuspended from the spilled pool of liquid (recovery time) until action can be taken to stop the suspension, such as covering or wetting the material after it dries.

Table 7.15. MICROSHIELD and MICROSKYSHINE Input Parameters for Calculating External Radiation Dose Rate From a Pool of Spilled Sludge

Parameter	Value
Activity	Source composition (Table 7.3) multiplied by splatter and resuspension release quantities.
Geometry	MICROSHIELD: Cylinder volume - side shields. MICROSKYSHINE: Vertical cylinder area source behind a wall.
Pool dimensions	14.8 m diameter by 3.5 cm deep, calculated using spreading coefficient of 8.7 ft^{-1} (Hall 1996b).
Material	Soil with a density of 1.6 g/cc; water with a density of 0.3 g/cc; air with a density of 0.0122 g/cc.
Maximum onsite individual	Person located 100 m from the nearest edge of the pool; the dose was calculated at a height of 1.5 m (5 ft) off the ground, the approximate mid-point of the individual.
Bremsstrahlung radiation	To account for this radiation, the gamma dose rate calculated by MICROSHIELD was increased by 14% and that calculated by MICROSKYSHINE by 23%. These factors were calculated from the gamma, Bremsstrahlung, and total radiation doses calculated by Hall (1996b).
Other	In MICROSKYSHINE, a small wall was assumed to be located between the source and receptor because MICROSKYSHINE does not allow the receptor to be in the direct line of sight of the source.

The EDE from the aerosols resuspended from the surface pool was calculated by multiplying the release quantity (volume suspended) by the unit dose values given in Table 7.9. For conservatism, the unit doses for long duration releases (i.e., plume meander included) were used in the dose calculations due to the rather lengthy release durations included in this scenario analysis. The results for the unmitigated release are:

- Onsite MEI: 0.74 L * 6.7E+02 Rem/L = 450 Rem
- Offsite MEI: 0.74 L * 1.2 Rem/L = 0.89 Rem

The doses from the mitigated accident scenario were calculated as follows:

- Onsite MEI: 6E-04 L * 6.7E+02 Rem/L = 0.40 Rem
- Offsite MEI: 6E-04 L * 1.2 Rem/L = 7.2E-04 Rem

Total Radiation Exposures

The total radiation dose to the onsite and offsite MEIs from the transfer system rupture event are the sum of the external radiation exposures from the surface pool (onsite MEI only) and the exposures from aerosol resuspension from the pool. The results are shown in Table 7.16.

Hazardous Chemical Exposures

The consequences from the release of hazardous chemicals associated with the pool release are expressed in terms of the relationship between the aerosol release quantities and release rate calculated above and the allowable releases calculated in Section 7.1 based on the inventories of hazardous chemicals in the source sludge material. The toxicological exposures are based on the maximum release rate, rather than total quantity. The maximum release rate for the onsite receptor would be different than for the offsite receptor. For the onsite receptor, the maximum release rate occurs while the sludge is being splattered or splashed on the ground. For conservatism, this release occurs over an approximately 30 minute time period (full shipping container pumped out at 50 gpm). The total release quantity from this phenomena was calculated to be 0.74 L over this time frame for a release rate of 0.008 L/min or 1.3E-04 L/sec. For the offsite receptor, the maximum release rate occurs after the contaminated ground surface dries and sludge materials are subject to resuspension from the contaminated soil surface. Assuming that 50% of this material is resuspended during the first two hrs after the pool surface dries (Hall 1996b), the maximum release rate is approximately 3.5E-05 L/sec ([0.50 L ÷ 2 ÷2 hr] * hr/60 min * min/60 sec).

For the mitigated release, the maximum release rate is the same for both onsite and offsite MEIs as splashing and splattering effects have been prevented by the mitigation measures. Therefore, the maximum release rate would be about 4E-08 L/sec, assuming 50% of the resuspended sludge is released within the first 2 hrs after the accident. The calculated aerosol release quantities and release rates and their comparison to the risk evaluation guidelines are presented in Table 7.17.

Table 7.16. Total Radiation Doses from Transfer System Pool Release Accident

	Frequency Category	Pathway and Analysis Results	Radiological Dose to Receptor (Rem)	
			Onsite	Offsite
Unmitigated	Anticipated	Direct	4.35	~0
		Aerosol	450	0.89
		Total Dose	454	0.89
		Guideline	0.5	0.1
		Comparison	ABOVE	ABOVE
Mitigated	Anticipated	Direct	~0	~0
		Aerosol	0.40	7.2E-04
		Total Dose	0.40	7.2E-04
		Guideline	0.5	0.1
		Comparison	BELOW	BELOW

Key Parameters and Assumptions--Unmitigated Accident Analysis

The key variables in the unmitigated accident analysis are described below:

- The frequency of transfer system ruptures was assumed to be the same as the frequency of spray leaks and also is consistent with the frequency assignments made by Hall (1996b). See that section for assumptions and parameters that were used to assign the spray leak frequency.

- The ruptured transfer system was assumed to release the entire shipping container's contents onto the soil surface in the unmitigated scenario.

- Soil characteristics in the AW tank farm were assumed to be similar to the soils used in the calculation of the spreading factor for liquid pools.

- The onsite MEI was conservatively assumed to be exposed to the pool of spilled sludge for a 12-hr period following the release. In the direct radiation dose analysis, it was assumed there are no intervening topographical features or structures between the source and receptor.

- Credit was not taken for the capability of the spill retention basin and pump pit to collect and contain a release from the transfer system. In addition, credit was not taken for external dose rate reduction provided by the concrete covers and portable shielding over the transfer line.

Table 7.17. Hazardous Material Release Consequences and Comparison to Risk Evaluation Guidelines for the Pool Release

Scenario	Frequency Category	Analysis Result	Release Quantity[a]	
			Onsite	Offsite
Unmitigated	Anticipated	Consequence	1.3E-04 L/sec 0.74 L	3.5E-05 L/sec 0.74 L
		Corrosives Guidelines	1.2E-02 L/sec 4.1E-02 L	9.4E+00 L/sec 2.3E+03 L
		Toxics Guidelines	2.3E-04 L/sec 7.8E-04 L	5.5E-02 L/sec 14 L
		Comparison - Corrosives - Toxics	 ABOVE ABOVE	 BELOW BELOW
Mitigated	Anticipated	Consequence	4E-08 L/sec 6E-04 L	4E-08 L/sec 6E-04 L
		Corrosives Guidelines	1.2E-02 L/sec 4.1E-02 L	9.4E+00 L/sec 2.3E+03 L
		Toxics Guidelines	2.3E-04 L/sec 7.8E-04 L	5.5E-02 L/sec 14 L
		Comparison	BELOW BELOW	BELOW BELOW

(a) The results and guidelines are presented in terms of the allowable release rate in L/sec (continuous release) and release quantity in L (puff release), as described in Section 7.1.

Key Parameters and Assumptions--Mitigated Accident Analysis

The key variables in the mitigated accident analysis are described below:

- Credit was not taken for the leak detection system in developing the frequency of the mitigated accident scenario.
- Credit was taken for the capability of the spill retention basin and AW-105 pump pit to collect and contain a release from the transfer system. Cover blocks over the pump pit and the spill basin structure were credited with suppressing splash and splatter effects from the spill.
- It was assumed the external exposures from sludge collected in the spill basin or AW-105 pump pit would be negligible.

7.2.2.4 Comparison with Guidelines

The comparisons of the unmitigated and mitigated consequences to the risk evaluation guidelines were presented in Tables 7.16 (radiological) and 7.17 (chemical). As shown, the radiological consequences calculated for the onsite and offsite MEIs were above the guidelines for the unmitigated accident scenario and below guidelines for mitigated accidents. The mitigation measures applied to reduce the consequences of the mitigated accident scenario effectively reduced the consequences to below the guidelines for an Anticipated accident. Unmitigated chemical consequences to the onsite receptor were above both the toxic and corrosive/irritant release guidelines and were below guidelines for the mitigated scenario. The unmitigated offsite exposures to corrosives/irritants and toxic chemicals were below guidelines. Mitigated exposures to offsite receptors were below guidelines for both toxics and corrosives/irritants.

7.2.2.5 Summary of Safety-Class SSCs and TSR Controls

Safety SSCs

Safety SSCs are addressed in Chapter 8.

TSR Controls

Credit was taken in the mitigated accident analysis for operators following appropriate written procedures with verification, the reliability of the transfer system piping, and the capabilities of the spill retention basin, AW-105 pump pit (including cover block), and covers/portable shielding placed over the flexible hose and connectors of the Sludge Receiving Station to mitigate consequences. Therefore, controls requiring appropriate written operating procedures and trained operators are required elements of this transfer. Procedures and training requirements are part of the TWRS safety programs described in Chapter 9. The procedures should include a pre-transfer visual inspection of the transfer system (pipes, pumps, valves, flanges, seals) where possible to detect any significant signs of degradation. Appropriate verification that this inspection was performed should also be included in the procedure. The operators should also be provided with emergency spill stabilization equipment and procedures to respond to an offload system rupture should one occur.

A control also should be established to ensure adequate performance of the spill retention basin, AW-105 pump pit (pit covers), and portable shielding or covers over the flexible line and it's connectors to contain sludge releases. Periodic testing and maintenance programs, as described in Chapter 9, would be required to ensure these systems are functioning properly. Installation of the shielding and covers with independent verification should also be included in written procedures.

Defense in Depth

Defense in depth items are addressed in Chapter 8.

7.2.3 Shipping Container Failure Without Fire

The Sludge Transportation System includes an accident-resistant shipping container to contain the sludge materials during transport and sludge offloading activities. The shipping container, which has not yet been designed, is expected to be a cylindrical metal pressure vessel built to withstand

Type B, or equivalent, accident conditions. Type B shipping containers are designed to withstand the mechanical and thermal effects of the following test conditions, in sequence, as defined in 10 CFR 71.73:

- Free drop from 9 m (30 ft) onto an essentially unyielding target (referred to here as the "impact test").
- Free drop from 1 m (40 in) onto a puncture probe ("puncture test").
- Exposure for 30 minutes to an 800°C (1475°F) thermal environment ("fire test").
- Exposure to water pressure equivalent to immersion under 15 m (50 ft) of water for not less than 8 hrs ("immersion test" - a slightly different immersion test is applicable to fissile material shipping containers).

All of these tests are applied to the shipping container so as to produce the maximum damage (e.g., the orientation of the shipping container during the impact and puncture tests must be in a position for which maximum damage is expected). This applies to the structural components of the shipping container, such as the container walls, lids, and bottom, as well as penetrations through the containment boundaries, including valves, sampling ports, etc. Therefore, it can be concluded that there would be no release of material from the shipping container from minor vehicular accidents. Only relatively severe, and rarely encountered, accidents would cause a release of material from the transportation system, particularly when the traffic and environmental conditions at the tank farm are considered. This and the next section are intended to address potential accidents in the tank farm and not during transport from K Basins to the tank farm. The latter will be addressed in a Safety Analysis Report for Packaging (SARP) to be prepared for the Sludge Transportation System.

The Sludge Transportation System is vulnerable to this accident scenario nearly everywhere within the tank farm. The transportation system would be vulnerable to collision accidents in which the vehicle strikes another vehicle or a fixed object within the tank farm. The collision accident may also be accompanied by a fire fueled by gasoline, diesel, or other hydrocarbon fuel used by the Sludge Transportation System tractor or other vehicle in the tank farm. The transportation system would also be vulnerable to failure from non-collision accidents, such as rollovers and fires not initiated by a collision. Such events could occur when the transportation system is moving to or being positioned at the Sludge Receiving Station or after the trailer has been immobilized at the Receiving Station. The analysis in the following section does not address the movement of the empty transportation system from the Sludge Receiving Station to the tank farm gate after unloading as the risks would be substantially lower than accidents involving a loaded transportation system.

Natural phenomena and extrinsic hazards may also affect the containment capabilities of the Sludge Transportation System. However, the risks (product of frequency and consequence) of these events leading to a release from the Sludge Transportation System were judged to be bounded by vehicular accidents for the following reasons:

- Aircraft crashes involving the tank farm were shown to be beyond extremely unlikely; an aircraft crash during the time a sludge transportation system vehicle is at the tank farm would be a relatively small fraction of the tank farm aircraft crash frequency if the time at risk were considered.

- Natural phenomena hazards, including floods, high winds, tornadoes, volcanic activity, lightning strikes, and snow events, were demonstrated in Chapter 5 to either have insignificant

effects on the containment capabilities of the shipping container or their frequencies are beyond extremely unlikely.

- A severe seismic event would accelerate the ground under the Sludge Transportation System but would not directly apply a sufficient force to the shipping container to breach containment. The seismic event may cause a vehicle to collide with the Sludge Transportation System or structural debris to fall onto the shipping container; however, the seismic event frequency combined with the conditional probabilities that it produces conditions severe enough to fail the shipping container would be less than extremely unlikely. The ground acceleration could, however, cause failure of the connections between the transportation system and the transfer station; the consequences of such failures are addressed in Sections 7.2.1 and 7.2.2.

Consequently, accidents initiated by natural phenomena or extrinsic hazards are not addressed in this section.

7.2.3.1 Scenario Development

As discussed above, damage to the shipping container is postulated to result from vehicular collisions and fires involving the container. The modeling approach used here to calculate the frequencies of transportation-related accidents is similar to the approach used by Fischer et al. (1987) to calculate the frequencies of spent nuclear fuel transportation accidents. Fischer et al. (1987) used an event tree approach to establish and quantify the frequencies of a wide range of vehicular accidents. The event tree displays an initiating event (i.e., the occurrence of a traffic accident) followed by a series of accident conditions (e.g., collision and non-collision accidents, fire occurs or no fire). The initiating event frequency is represented by the traffic accident rate (accidents per unit distance traveled), which encompasses all accidents ranging from minor to severe. The subsequent accident conditions were displayed as branches on an event tree. Each branch has an associated conditional probability of occurrence. The transportation accident scenarios are represented by each unique pathway through the event tree. The accident scenario frequencies are the products of the initiating event frequency (accident rate) and the relevant branch conditional probabilities.

As discussed above, the Sludge Transportation System is vulnerable to collision and fire accidents. Therefore, the accident frequencies and the levels of damage to the shipping container are functions of the collision velocity, collision target hardness, collision orientation, fire temperature, and fire duration. The frequencies and levels of damage are also a function of the type of accident (e.g., collision with a fixed object, collision with another vehicle, non-collision accidents such as overturns). Fischer et al. (1987) developed a modified event tree that addresses each of these parameters. This event tree addresses traffic accidents occurring on public highways. This means that it includes branches that are not applicable to the tank farm. Therefore, it was modified to more accurately reflect tank farm conditions. The following branches of the Fischer et al. event tree were removed or combined with other branches:

- Collisions with bridge railings, bridge abutments, concrete columns, overpasses, and barriers were removed. There are no bridges or overpasses in the tank farm.

- Collisions with other vehicles included trains, automobiles, motorcycles, buses, and "soft" targets (e.g., cones, pedestrians, animals) were combined into a single branch for this

analysis. Collisions with other vehicles was then divided into collisions with closing velocities greater than and less than the failure threshold velocity for the Sludge Transportation System. Collisions at velocities lower than the failure threshold would result in no release but a release could occur if the closing velocity is greater than the failure threshold.

- Non-collision accidents addressed by Fischer et al. (1987) included off road accidents (impact into a slope, embankment, tree, or other offroad item), overturns, jackknifes, other events that involve mechanical loading, and fire-only accidents. Impacts into an embankment, slope, and tree were removed from the event tree as these items do not exist at the tank farm. Jackknife incidents were also removed because the probability of a jackknife accident at low speeds is extremely low. Furthermore, the damage from a jackknife accident occurs primarily as a result of the impact with the roadbed. The road surface within the tank farm is soil, not asphalt or concrete road surfaces that are much harder than soil, so a jackknife accident would also not cause failure of the shipping container. The remaining non-collision accidents that were incorporated into the event tree model were overturns, offroad accidents, and fire-only accidents. Other non-collision accidents were also included in the event tree but were combined into a single event, or branch, that does not result in failure of the shipping container. Mechanical damage from these events would be minimal due to striking "soft" targets or would be low speed impact events.

In addition, for the purposes of this study, the accident orientation or impact angle was removed as a variable from the analysis. It was assumed that all impact events that exceed that container failure threshold would result in shipping container failure regardless of the impact angle. This is a conservative assumption, given that the shipping container is more vulnerable to some impact orientations than others. For example, cylindrical shipping containers are more susceptible to impacts on the side or long axis of the container (impact angle = 90°) than they are to head-on impacts (impact angle = 0°). This means that larger closing velocities or higher hardness targets would be needed to cause container failure for some impact orientations. This was neglected from this study and the lowest closing velocity that could produce stresses above the failure threshold of the shipping container was used.

The above information was used to "prune" the event tree in Fischer et al. (1987) to develop a tailored event tree for tank farm accidents. The event tree developed to model the shipping container accidents is presented in Figure 7.3. Note there are branches for non-collision (Sheet 1) and collision (Sheet 2) accidents and subsequent branches that further describe the mechanical and thermal conditions developed in the accident. Each path through the event tree represents an accident scenario. Each accident scenario has an associated consequence or outcome. The outcomes are represented by qualitative descriptors in the event tree in Figure 7.3. These are defined as: 1) **No** = no release; **Mechanical** = mechanical release only (i.e., the release is not compounded by the thermal effects from a fire); 3) **Thermal** = releases of volatile and particulate materials as a result of the thermal effects of a fire); and 4) **Mechanical Plus Thermal** = release from mechanical impact plus the thermal effects of a long-duration fire.

Unmitigated Accident Scenario

The event tree analysis presented in Figure 7.3 represents the unmitigated accident scenarios. No credit is taken in the event tree for physical barriers or administrative controls, beyond the credit taken for the accident resistance provided by the Sludge Transportation System. The shipping

container, which will be a pressure vessel certified to American Society of Mechanical Engineers (ASME) Boiler and Pressure Vessel Code standards, is a passive barrier. Credit may be taken for passive barriers in the unmitigated accident analysis. No credit was taken for driver training and operating procedures which tend to reduce the accident rate for Hanford truck shipments relative to general commerce truck shipments. In addition, no credit was taken for Hanford-specific traffic and road conditions, such as significantly lower travel speeds in the tank farm relative to highway traffic, absence of "hard" objects (rock outcroppings, concrete ditch banks) and other barriers, and lower traffic volumes. As a result, the branch or conditional probabilities shown in the Figure are values taken directly from Fischer et al. (1987), which are representative of highway traffic accidents involving tractor-trailer rigs in general commerce.

Unmitigated Accident Frequency

Event trees may be quantified to estimate the frequencies of the various outcomes. The quantification process involves summing the sequence frequencies in each outcome bin. Since this section addresses only mechanical failures of the shipping container, only the sequences assigned to outcome bin referred to as "Mechanical" on Figure 7.3 are addressed in this section. Outcomes involving both mechanical and thermal events are addressed in Section 7.2.4. The sequence frequencies are obtained by multiplying together the initiating event frequency and branch conditional probabilities. Care was taken in developing the event tree to ensure that the branch probabilities are mutually exclusive or are independent of all other branches of the tree.

The following example was prepared to illustrate the event tree quantification process for a single accident scenario. The scenario selected is N1 (see Figure 7.3, Sheet 1 of 2). Following the path through the event tree for this sequence, one can see it is a combination of the following "events"; **Vehicle Accident Occurs** AND the accident is a **Non-collision** accident, involves only a fire (**Fire Only**; i.e., no mechanical failures), the fire/thermal environment is less than that which would cause the shipping container to fail (**<Failure**). As shown on the figure, this sequence would not result in a release from the shipping container. The values for these parameters are given below. The bases for all of the values shown on the figure are discussed later.

- **Vehicle Accident Occurs**: 4.0E-06 accidents/km
- Accident is **non-collision**: 0.2588 (25.88% of all accidents do not involve collisions with other vehicles or with fixed objects).
- Non-collision accidents that are **fire only**: 0.0375 (3.75% of all non-collision accidents involve only fire and do not involve impact or collision events)
- Fire environment is less than failure threshold of shipping container (**<Failure**): 0.8551

The frequency of this sequence is the product of these four values, as shown below:

$$F_{N1} = (4.0E\text{-}06/km)\ (0.2588)\ (0.0375)\ (0.8551)$$
$$= 3.3E\text{-}08/km$$

The frequencies of each scenario depicted in Figure 7.3 were calculated using the approach outlined above. The accident frequency and conditional or branch probabilities were taken directly from several sources of traffic accident data or were derived from these and other sources. The values used in the event tree quantification process and their bases are presented in Table 7.18. Note that some of the values in the table are assumed values.

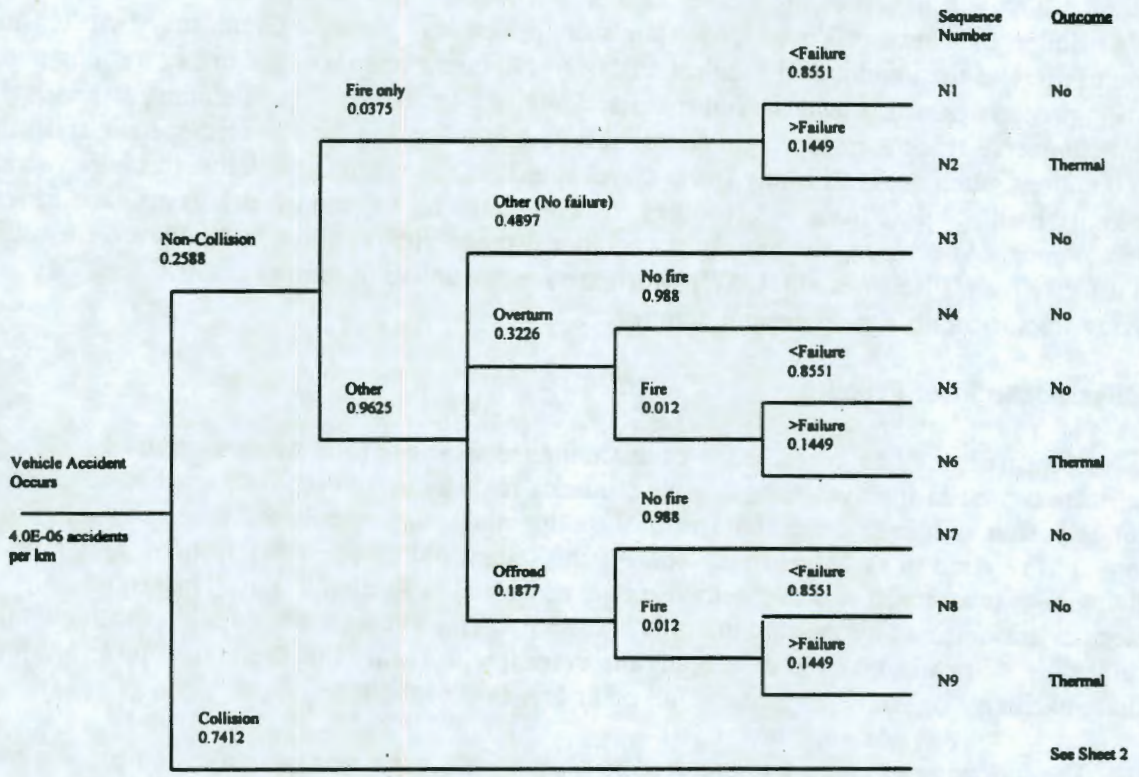

Figure 7.3. Event Tree - Unmitigated Sludge Transportation System Accidents (Sheet 1 of 2)

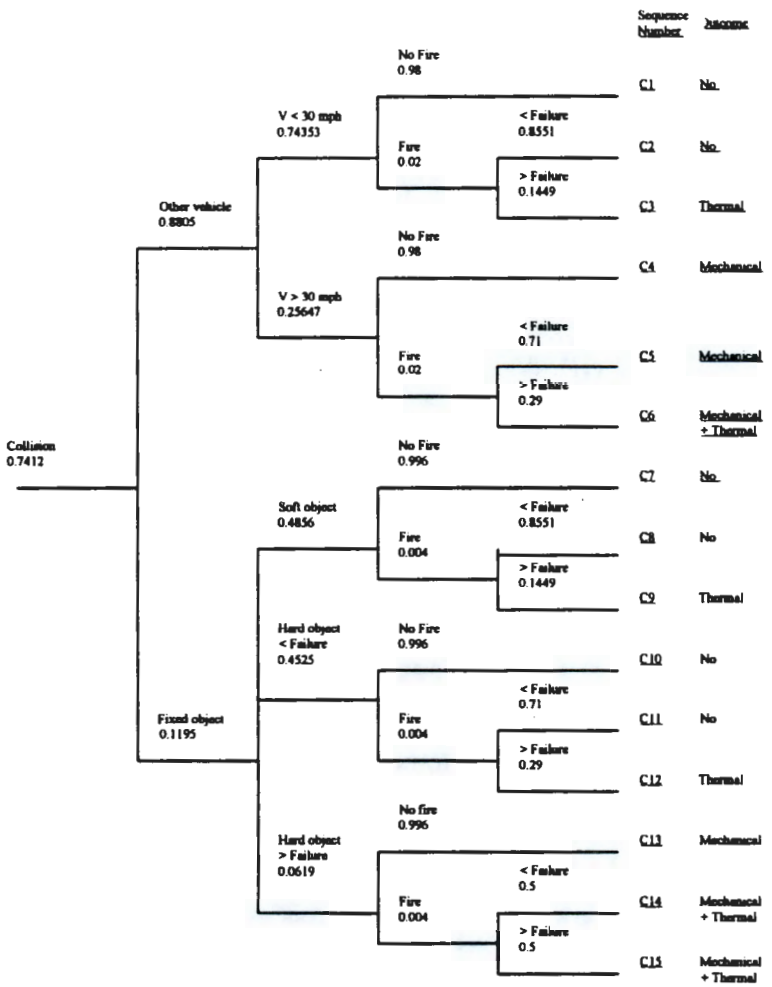

Figure 7.3. Event Tree - Unmitigated Sludge Transportation System Accidents (Sheet 2 of 2)

Each accident sequence was assigned to one of four outcome bins (no release, mechanical release, etc.). This was done because the consequences of the accidents are dependent on the mechanical and thermal conditions encountered in the accident. Releases from accidents involving fires are likely to be higher than non-fire (i.e., mechanical only) accidents as an additional energetic driving force for a release is applied to the K Basin sludge and sludge shipping container in accidents involving fires.

The accident scenario addressed in this section focuses on mechanical releases only. Accidents that involve mechanical impact and fire or fire-only are addressed in Section 7.2.4. This

Table 7.18. Branch-point Probabilities Used in Event Tree Quantification - Mitigated Case

Parameter	Value	Source, Basis
Vehicle accident occurs	3.98E-06/km (6.4E-06/mi)	Source: Fischer et al. (1987).
Non-Collision Accidents (See Figure 7.4, Sheet 1 of 2)		
Non-collision	0.2588	Source: Fischer et al. (1987). Non-collision accidents were assumed not to result in mechanical failure of the shipping container. This is due to the low speeds in the tank farm and general absence of "hard" targets, including the roadway and embankments.
Fire only	0.0375	Source: Fischer et al. (1987).
Other	0.9625	Source: Fischer et al. (1987). This is determined by subtracting "Fire only" probability (0.0375) from 1.0.
Off-road	0.1877	Source: Fischer et al. (1987). Includes conditional probabilities of off-road accidents into a slope and into an embankment. Off-road accidents involving other targets (e.g., trees) were judged to be inconsequential to the shipping container.
Overturn	0.3226	Source: Fischer et al. (1987). Overturns were judged to be the only roadbed impact events the shipping container is vulnerable to in tank farms. Jackknife accidents were ignored because vehicle speed in the tank farms is low.
Other (no failure)	0.4897	Source: Fischer et al. (1987). Obtained by subtracting the sum of the off-road and overturn conditional probabilities (see above) from 1.0.
No fire in "Other" non-collision accident	0.988	Source: Fischer et al. (1987).
Fire occurs in "Other" non-collision accident	0.012	Source: Fischer et al. (1987).
< Failure	0.8551	Source: Fischer et al. (1987).
> Failure	0.1449	Source: Fischer et al. (1987).
Collision Accidents (Figure 7.4, Sheet 2 of 2)		
Collision	0.7412	Source: Fischer et al. (1987).
Collision with other vehicle	0.8805	Source: Fischer et al. (1987).

Parameter	Value	Source, Basis
Collision with fixed object	0.1195	Source: Fischer et al. (1987).
Soft object	0.4856	Source: Fischer et al. (1987). Value means that 48.56% of all fixed-object collision accidents would involve a soft target that will undergo substantial yielding, thus resulting in little mechanical damage to the shipping container.
Hard object <Failure	0.4525	Source: Fischer et al. (1987). Collision involves a hard object but mechanical damage insufficient to fail shipping container.
Hard object >failure	0.019	Source: Fischer et al. (1987). Represents probability that collision with hard object is sufficient to cause mechanical failure of shipping container.
V < 30 mph	0.74353	Source: Fischer et al. (1987). 30 mph value chosen as approximate container failure threshold based on impact velocity obtained during 9 m (30 ft) free drop test condition.
V > 30 mph	0.25647	Source: Fischer et al. (1987). Calculated by subtracting 0.74353 probability of V < 30mph from 1.0.
No Fire (collisions with other vehicles)	0.98	Source: Fischer et al. (1987); sum of the fractions of collisions with cars and other vehicles plus collisions with other non-fixed objects.
Fire (collisions with other vehicles)	0.02	Source: Fischer et al. (1987); complement of event "No Fire (collisions with other vehicles).
No Fire (collisions with fixed objects)	0.996	Source: Fischer et al. (1987).
Fire (collisions with fixed objects)	0.004	No Fire (collisions with fixed objects); complement of event "Fire (collisions with other vehicles).
<Failure (collisions with other vehicles below 30 mph)	0.8551	Source: Fischer et al. (1987);
>Failure (collisions with other vehicles below 30 mph)	0.1449	Source: Fischer et al. (1987); complement of event "<Failure (collisions with other vehicles below 30 mph)

Parameter	Value	Source, Basis
< Failure with fire (collisions with other vehicles at greater than 30 mph and collisions with hard fixed objects at less than the container failure threshold)	0.71	Complement of > Failure (collisions with other vehicles at greater than 30 mph). See below.
> Failure with fire (collisions with other vehicles at greater than 30 mph and collisions with hard fixed objects at less than the container failure threshold)	0.29	Represents the fraction of collisions that exceed the thermal failure threshold of a mechanically-damage shipping container; assumed to be twice the probability that the failure threshold would be exceeded for an undamaged shipping container (see > Failure without fire)
< Failure (collisions with hard fixed objects at greater than failure threshold)	0.5	Assumption; means that 50% of fixed object collisions that result in mechanical failure of the shipping container will involve thermal environments that are below the thermal failure threshold of the shipping container.
> Failure (collisions with hard fixed objects at greater than failure threshold)	0.5	Complement of > Failure (collisions with hard fixed objects at greater than failure threshold); means that 50% of fixed object collisions that result in mechanical failure of the shipping container will involve thermal environments that are above the thermal failure threshold of the shipping container.

was done because it is recognized in most cases that mechanical (impact) accidents are more likely to occur than accidents involving fires yet their consequences are likely to be smaller. Thus, in order to ensure the risks (frequency and consequence) are adequately addressed, both types of vehicular accidents (i.e., impact only and fire with or without impact) are addressed. The frequencies of the two types of vehicular accidents were determined by summing the frequencies of the accident scenarios in each outcome bin. The accident scenarios and unmitigated accident frequencies in each outcome bin are summarized in Table 7.19. The bin frequencies are also presented in the table.

As shown in Table 7.19, the frequency of mechanical (impact) accident scenarios (outcome bin 3) was calculated to be 6.84E-07 per km traveled for the unmitigated case. The annual frequency of this bin is the product of the frequency per km and the annual shipping distance. The annual shipping distance is the product of the number of shipments per year and the approximate one-way shipping distance within the tank farm. The one-way shipping distance within the tank farm was estimated to be approximately 400 m (0.4 km). Only the distance traveled by the loaded transportation system was included in this estimate. The annual number of shipments was estimated by dividing the total sludge volume to be shipped to the tank farm (total m^3 of sludge) by the

Table 7.19. Unmitigated Accident Scenario and Outcome Bin Frequencies

Outcome Bin	Accident Sequences in Outcome Bin	Accident Sequence Frequencies (per km)	Total Outcome Bin Frequency (per km)
1 (No Release)	N1	3.30E-08	3.28E-06
	N3	4.85E-07	
	N4	3.16E-07	
	N5	3.28E-09	
	N7	1.84E-07	
	N8	1.91E-09	
	C1	1.89E-06	
	C2	3.30E-08	
	C7	1.70E-07	
	C8	5.85E-10	
	C10	1.59E-07	
	C11	4.53E-10	
2 (Thermal Only)	N2	5.59E-09	1.24E-08
	N6	5.56E-10	
	N9	3.23E-10	
	C3	5.59E-09	
	C9	9.92E-11	
	C12	1.85E-10	
3 (Mechanical Only)	C4	6.52E-07	6.84E-07
	C5	9.45E-09	
	C13	2.17E-08	
4 (Mechanical Plus Thermal)	C6	3.86E-09	3.95E-09
	C14	4.36E-11	
	C15	4.36E-11	

shipment capacity (m^3 per shipment) and the estimated duration of the shipping campaign (yrs). Current estimates are that an approximate total of 360 m^3 (96,000 gal.) of sludge and basin water are to be transported over a 10 month shipping campaign. The Sludge Transportation System is currently projected to have a design capacity of 6 m^3 of sludge (including sludge solids and basin water). Therefore, the annual number of shipments was estimated to be:

$$\text{Annual shipments} = 360\ m^3 \div 6\ m^3/\text{shipment} = 60\ \text{shipments/yr}$$

The annual frequency of outcome bin 3, which represents mechanical accidents that result in shipping container but do not involve fires, is as follows:

$$\begin{aligned}\text{Annual Frequency} &= \text{Bin 3 Frequency} * \text{Shipping Distance} * \text{Annual shipments}\\ &= 6.84\text{E-07 accidents/km} * 0.4\ \text{km/shipment} * 60\ \text{shipments/yr}\\ &= 1.6\text{E-05 accidents/yr}\end{aligned}$$

This would fall into the Extremely Unlikely frequency category. However, due to substantial uncertainties in the parameter values, which are generally believed to overstate the frequency, the scenario would be, at greatest, an **Unlikely** scenario in terms of the WHC-CM-4-46 definitions.

Mitigated Accident Scenario

The mitigated accident scenarios are the same as those shown in Figure 7.3. The differences between mitigated and unmitigated accident scenarios are in the conditional probability values shown in the Figure. The differences arise from two main sources: 1) Hanford-specific road and traffic conditions, and 2) driver training and qualification requirements. In addition, since an accident of this type and subsequent release would be detected immediately, it is believed that emergency actions to reduce the aerosol released to the atmosphere would be effective in mitigating the consequences.

Hanford- and tank-farm-specific road and traffic conditions would generally be less conducive to transportation accidents than a general commerce truck shipment traveling on a public highway. The adjustments made to model Hanford traffic and road conditions are:

- The traffic accident rate used in the calculations was adjusted to the Hanford-specific traffic accident rate developed from actual Hanford vehicular accident data. The traffic accident rate used for the unmitigated conditions was based on heavy truck accident rates in general commerce. The use of Hanford-specific accident rates would incorporate the substantial experience of Hanford truck drivers on the actual roads to be driven at the tank farm as well as the additional job-specific training that would be given to the Hanford truck drivers delivering a sludge shipment to the tank farm.

- The average and maximum vehicle speed in the tank farms would be substantially lower than traffic speeds on a public highway. This means that a much smaller proportion of collisions with other vehicles or objects would occur at closing velocities in excess of the failure threshold velocity of the sludge shipping container (assumed to be 30 mph based on impact velocity attained in the regulatory 9 m free drop test) than would occur on a public highway.

- Road conditions in the tank farm are considerably different than public highway conditions. A few examples were cited above to "prune" the event tree to account for tank farm conditions, such as lack of bridges, tunnels, and many other potential "hard" targets. The probability of striking a "hard" target in the tank farms was adjusted to account for a smaller fraction of hard targets at tank farms than there would be on a public highway.

The adjusted values of the affected accident rate and branch probabilities used in the mitigated accident case are discussed in the next section. The revised event tree illustrating the mitigated accident scenarios are presented in Figure 7.4.

Mitigated Accident Frequency

Derivation of the adjusted parameter values used in Figure 7.4 is discussed in this section. As discussed above, the three areas in which adjustments to the event tree values included the traffic accident rate, proportion of accidents that involve closing speeds in excess of the sludge transportation system failure velocity, and the probability of striking a hard object. The mitigated scenario values for these parameters are derived in the following paragraphs.

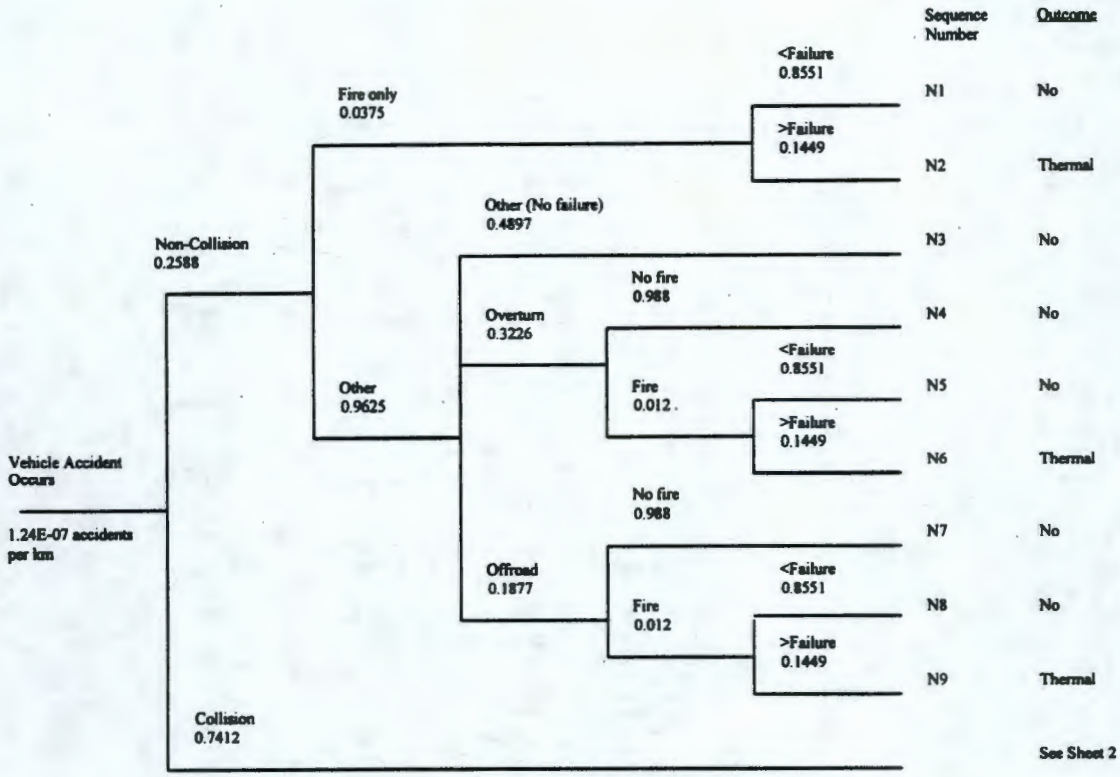

Figure 7.4. Event Tree - Mitigated Sludge Transportation System Accidents (Sheet 1 of 2)

- **Hanford-specific truck accident rate**: WHC-SD-TP-RPT-021, Rev. 0, *Hanford Site Truck Accident Rate, 1990-1995*, (Green, Flanagan, and Harris 1996) provides a quantitative analysis of the likelihood of truck accidents at the Hanford Site. While the report focuses on trucks carrying radioactive material shipments, all accidents resulting in personnel injury or death, or greater than a specified amount of property damage are considered in estimating the truck accident frequency. This report indicates that 6 truck accidents occurred at the Hanford Site from 1990 to 1995. Of these six, none involved a truck impact to a stationary object like a building, which is the predominant hard object in the tank farm. The truck accident rate is estimated to be less than 1.2E-07 accidents/km (2.0E-07 accidents/mi). This value is the upper 95% confidence interval (i.e., 95% certain that the actual accident rate is less than this value) calculated by Green, Flanagan, and Harris (1996).

- **Impact velocity greater than 30 mph**: Due to conditions in the tank farms, it is far less likely to have a 30 mph impact accident there than on a public highway. Fischer et al. (1987) reported the probabilities of collisions with other vehicles at greater than 30 mph closing velocities is on the order of 25%. However, these probabilities were derived from highway traffic accident statistics. Since highway traffic would travel at substantially higher speeds than traffic in the tank farm, a higher proportion of the accidents on highways would occur at high speeds than would occur at a tank farm. Therefore, this value was adjusted downward to reflect the fact that vehicle speeds are much lower in the tank farm than they would on a

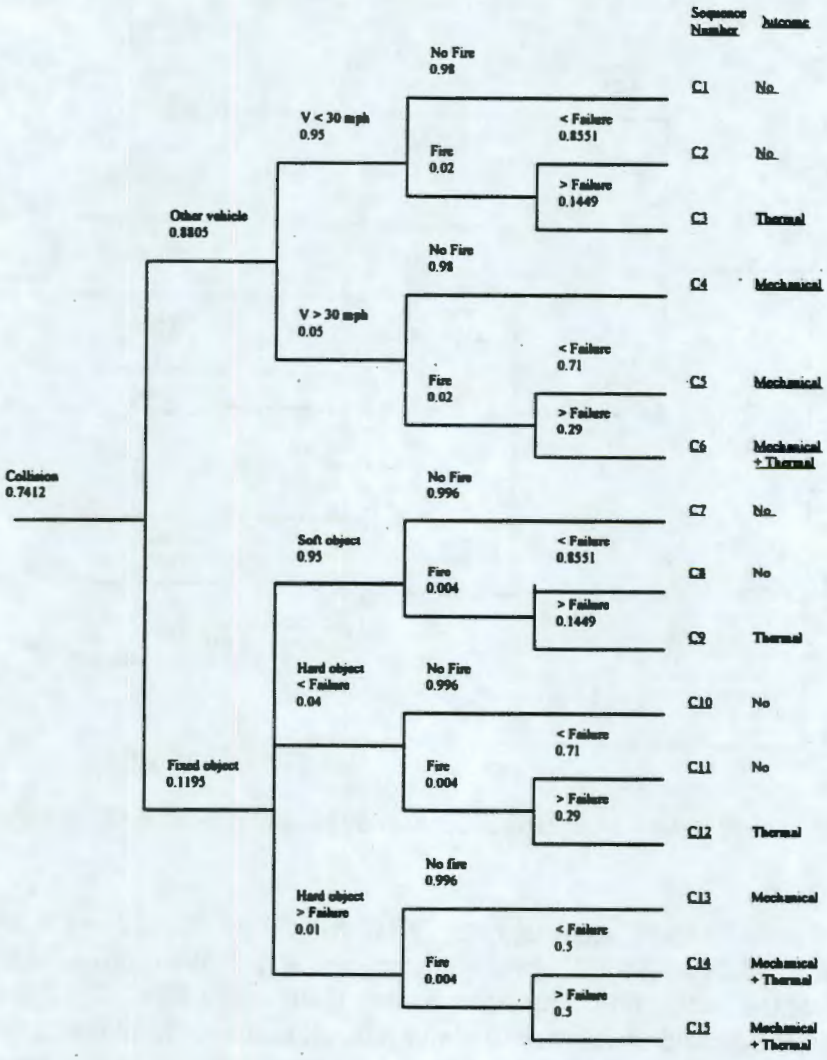

Figure 7.4. Event Tree - Mitigated Sludge Transportation System Accidents (Sheet 2 of 2)

highway. The perimeter road to be used by the Sludge Transportation System is a short, one-way dirt road which is not conducive to high speeds. Furthermore, the transportation system will have to negotiate two 90° turns, further lessening the likelihood of high speeds. There is also a bermed area across the road that would further restrict vehicle speeds. Based on these observations, it was assumed that there is only about a 5% likelihood that a vehicle-vehicle collision in the tank farm would occur at impact velocities above 30 mph.

- **Hard and soft object impact**: The likelihood of striking a "hard" object, such as concrete barrier, bridge abutment, rock outcropping, etc., in the tank farm is much smaller than striking such an object on a public highway. There are few "hard" objects in the tank farm. The only objects that possess the characteristics of a hard object would be the ventilation

system and control buildings located on the perimeter of the tank farm. For this analysis, it was assumed that the probability of striking a hard object is 0.05. Of this, it was assumed that 80% of the hard targets would absorb sufficient impact energy through structural deformation that the sludge container would not fail. For example, the control building structure would absorb some of the impact energy should it be struck by the sludge shipping container. Therefore, it was assumed that the fraction of impacts with hard objects that result in cask failure is 0.01 (20% of 0.05) and the remaining 0.04 (80% of 0.05) would not result in structural failure of the shipping container. This means that 1% of collisions with fixed objects would involve sufficient impact velocity and target hardness to result in failure of the shipping container. Four percent of fixed object collisions in the tank farm would result in impact with a hard object that absorbs enough impact energy that the shipping container failure threshold would not be reached.

These adjusted values were substituted into the event tree (see Figure 7.4) to calculate the mitigated accident frequency. As with the unmitigated scenario frequency, this section is only interested in mechanical failures of the shipping container (outcome bin 3; combined thermal and mechanical failures are addressed in the Section 7.2.4). The results of the mitigated accident frequency calculations for all 4 outcome bins are presented in Table 7.20. As shown, the frequency of outcome bin 3 was calculated to be 4.14E-09 accidents/km. As was done for the unmitigated frequencies, this value was multiplied by the approximate annual vehicle mileage to calculate the annual frequency of an accident in this outcome bin. Assuming there will be approximately 60 shipments/yr at an average one-way shipping distance of 0.4 km (shipping distance within the tank farm), the annual frequency is:

Annual Frequency	=	Bin 3 Frequency * Shipping Distance * Annual shipments
	=	4.14E-09 accidents/km * 0.4 km/shipment *60 shipments/yr
	=	9.9E-08 accidents/yr

This is within the Beyond Extremely Unlikely (less than 1E-06 accidents per year) accident frequency category. Uncertainties in the values used in the calculations are not anticipated to drive the frequency into the Extremely Unlikely frequency category because of the number of bounding assumptions made in the analysis.

7.2.3.2 Source Term Analysis

This section calculates the aerosol release from the sludge shipping container that could result from a non-fire vehicular accident event.

Unmitigated Accident Source Term

The release source term for the unmitigated radiological release would be the same as that for rupture of the transfer line, given that the entire shipping container contents was assumed to be released and form a liquid pool and then soak into the soil. Release mechanisms would include splash/splatter effects, resuspension from a liquid pool, and resuspension from the ground surface after the sludge has soaked into the soil. The total unmitigated release quantity would then be 0.74 L of worst-case K Basin sludge. The maximum release rate used in toxicological calculations would be 4E-04 L/sec for the onsite MEI and 4E-05 L/sec for the offsite MEI.

Table 7.20. Mitigated Accident Scenario and Outcome Bin Frequencies

Outcome Bin	Accident Sequences in Outcome Bin	Accident Sequence Frequencies (per km)	Total Outcome Bin Frequency (per km)
1 (No Release)	N1	1.03E-09	1.20E-07
	N3	1.52E-08	
	N4	9.87E-09	
	N5	1.02E-10	
	N7	5.74E-09	
	N8	5.96E-11	
	C1	7.55E-08	
	C2	1.32E-09	
	C7	1.04E-08	
	C8	3.58E-11	
	C10	4.39E-10	
	C11	1.25E-12	
2 (Thermal Only)	N2	1.75E-10	4.32E-10
	N6	1.74E-11	
	N9	1.01E-11	
	C3	2.23E-10	
	C9	6.06E-12	
	C12	5.11E-13	
3 (Mechanical Only)	C4	3.97E-09	4.14E-09
	C5	5.76E-11	
	C13	1.10E-10	
4 (Mechanical Plus Thermal)	C6	2.35E-11	2.40E-11
	C14	2.20E-13	
	C15	2.20E-13	

Mitigated Accident Source Term

Rapid and effective emergency response measures is a potential way to reduce the quantity of sludge aerosolized as a result of this accident. Mitigation of the source term for this accident would involve steps to control the amount of material released via the resuspension mechanism. These steps could include actions to stabilize the spill area by wetting, covering, or turning over the contaminated soil to prevent it being picked up and suspended by wind action. Finally, the contaminated soil in the spill area would be removed and disposed to prevent further exposures.

It was assumed that effective emergency response to this accident could occur within 2 hrs. Resuspension releases after this 2-hr period was assumed to be stopped. In section 7.2.2, the resuspension release from contaminated soil was calculated assuming over a 24 hr period that the fraction of material resuspended in respirable form was 8.4E-05 The release quantity from the mitigated accident scenario would then be:

$$Q\ (\text{mitigated}) = (6\ m^3)(1000\ L/m^3)(8.4E\text{-}05/24\ hr)(2\ hr) = 0.04\ L$$

7.2.3.3 Consequence Analysis

The consequences of the unmitigated radiological release would be the same as the consequences of a rupture of the transfer line, given that the entire shipping container contents was assumed to be released, form a liquid pool, and then soak into the soil. The consequences from the liquid pool release, which included both inhalation doses and doses from direct exposure to the pool, were shown previously in Table 7.16.

The consequences of the mitigated release were calculated by combining the direct radiation exposures and inhalation doses from the aerosol release. The direct radiation doses calculated in Section 7.2.2 for the pool scenario were calculated to be 0.03 rem onsite and negligible offsite. The inhalation dose calculated below is added to this result:

$$\text{Inhalation dose (onsite)} = (0.04\ L)(2000\ rem/L) = 80\ rem$$

$$\text{Inhalation dose (offsite)} = (0.04\ L)(1.6\ rem/L) = 0.06\ rem$$

The results are presented in Table 7.21. Table 7.21 also presents the radiological risk evaluation guidelines and a comparison of the calculated doses to the guidelines.

The consequences of a release of hazardous chemical materials is expressed in terms of the total release quantity and release rate of sludge resulting from the transportation accident release. For conservatism, the release quantities and release rates of hazardous chemicals from this transportation accident were assumed to be the same as the unmitigated release source terms from the liquid pool release. This neglects the effects of emergency response actions on the hazardous chemical releases. The results are presented in Table 7.22. In addition, Table 7.22 presents a comparison to the risk evaluation guidelines.

Key Parameters and Assumptions–Unmitigated Accident Analysis

- It was assumed that the Sludge Transportation System would be designed and certified to pass the Type B packaging test requirements specified in 10 CFR 71 (free drop, puncture, thermal, and immersion tests).

- The mechanical failure threshold for the sludge shipping container was assumed to be represented by an impact at a 30 mph closing velocity of any impact orientation. The 30 mph value was chosen because it represents the approximate impact velocity attained during the 9 m free drop test required for package certification. This value is conservative because it neglects the effects of the impact orientation and assumes that the target absorbs essentially no energy.

- The unmitigated accident rate was assumed to be the same as the highway accident rate for general commerce heavy truck shipments. No credit was taken for job-specific procedures and training provided to Hanford truck drivers nor their familiarity with the road and traffic conditions in the tank farm.

Table 7.21. Total Radiation Doses from Sludge Shipping Container Accident Without Fire

	Frequency Category	Pathway and Analysis Results	Radiological Dose to Receptor (Rem)	
			Onsite	Offsite
Unmitigated	Unlikely	Direct	0.03	~0
		Aerosol	1.5E+03	1.2
		Total Dose	1.5E+03	1.2
		Guideline	5	0.5
		Comparison	ABOVE	ABOVE
Mitigated	Extremely Unlikely	Direct	0.03	~0
		Aerosol	80	0.06
		Total Dose	80	0.06
		Guideline	NA[a]	NA[a]
		Comparison	ABOVE	BELOW

(a) Risk evaluation guidelines for accidents that are below extremely unlikely (i.e., frequency less than 1E-06/yr) have not been established. It was assumed here that mitigation measures applied to this accident scenario, which cause the frequency to be less than extremely unlikely, would result in an acceptably low risk.

- No credit was taken for Hanford-specific target hardness information. Routes representative of public highways were used in the unmitigated scenario analysis.

- No credit was taken in the unmitigated scenario analysis for radiation monitoring and leak detection capabilities which could reduce release quantities by accelerating the time taken to detect and recover from a failed shipping container.

Key Parameters and Assumptions--Mitigated Accident Analysis

The following assumptions and key parameter values were used in this analysis.

- It was assumed that the Sludge Transportation System would be designed and certified to pass the Type B packaging test requirements specified in 10 CFR 71 (free drop, puncture, thermal, and immersion tests).

- It was assumed that the shipping container accidents that have impact velocities below 30 mph would not result in mechanical failure of the Sludge Transportation System. This was based on the impact velocity attained during the 9m free drop required for package certification.

Table 7.22. Hazardous Material Release Consequences and Comparison to Risk Evaluation Guidelines for the Transportation Accidents Not Involving Fires

Scenario	Frequency Category	Analysis Result	Release Quantity[a]	
			Onsite	Offsite
Unmitigated	Unlikely	Consequence	4E-04 L/sec 0.74 L	4E-05 L/sec 0.74 L
		Corrosives Guidelines	0.23 L/sec 0.81 L	14 L/sec 3.5E+03 L
		Toxics Guidelines	2.2E-03 L/sec 7.7E-03 L	0.27 L/sec 68 L
		Comparison - Corrosives - Toxics	 BELOW ABOVE	 BELOW BELOW
Mitigated	Beyond Extremely Unlikely (Guidelines given are for Extremely Unlikely scenarios)	Consequence	4E-04 L/sec 0.74 L	4E-04 L/sec 0.74 L
		Corrosives Guidelines	5.8E-01 L/sec 2 L	280 L/sec 7E+04 L
		Toxics Guidelines	4.5E-03 L/sec 0.016 L	2.7 L/sec 660 L
		Comparison	BELOW BELOW	BELOW BELOW

(a) The results and guidelines are presented in terms of the allowable release rate in L/sec (continuous release) and release quantity in L (puff release), as described in Section 7.1.

- It was assumed in the mitigated accident frequency calculations that less than 5% of the surface area at the tank farm comprises a "hard" object; i.e., an object that would not deform substantially as a result of a vehicular impact.

- It was assumed that driver experience and training on Hanford roads and within the tank farm would result in a lower accident rate than would be experienced by drivers of heavy trucks on public highways.

- It was assumed that there is a 30 mph or lower speed limit in the tank farm (mitigation measure).

- It was assumed that emergency procedures and equipment would be available to mitigate a potential spill of K Basin sludge from a transportation accident. This will reduce the release duration by halting the resuspension of aerosols from the liquid pool.

7.2.3.4 Comparison with Guidelines

Table 7.21 presents a comparison of the accident scenario frequencies and radiological consequences calculated in this section to the risk evaluation guidelines provided in WHC-CM-4-46, Rev. 1. As shown, the unmitigated consequences to the maximum onsite and offsite individuals are above the risk guidelines for an Unlikely accident frequency categories. Since the applied mitigation measures were demonstrated to reduce the accident frequency to Beyond Extremely Unlikely, the mitigated consequences were interpreted to be below guidelines.

The hazardous chemical consequences shown in Table 7.22 were above risk evaluation guidelines for the unmitigated accident scenario and below the guidelines (Extremely Unlikely guidelines were used even though the mitigated scenario frequency was demonstrated to be Beyond Extremely Unlikely) for mitigated scenario for both receptors. Thus, controls that reduce the accident frequency would still be required, similar to the conclusions derived from the comparisons to radiological risk guidelines.

7.2.3.5 Summary of Safety-Class SSCs and TSR Controls

Safety SSCs

A preliminary Safety Class Evaluation was performed to support the designation of safety-related systems, structures, and components. The evaluation is presented in Chapter 8.

TSR Controls

The following items were determined to be candidates for TSR controls. Final TSRs will be prepared following completion of the shipping container and offload system design activities.

- A 30 mph maximum speed in the tank farm was assumed in the accident analysis. The speed limit would limit damage to the Sludge Transportation System during a vehicular collision and during collisions with fixed objects. The actual speed limit may be lower but a 30 mph maximum speed would prevent mechanical damage to the shipping container in most instances that exceeds the container's failure threshold.

- The Sludge Transportation System and the tank farm were assumed to be equipped with spill stabilization capabilities to limit the amount of material suspended from a pool of spilled liquid. This capability was assumed to reduce the time to recover from a spill and stabilize the spill area to halt resuspension from the spill area to 2 hr. An emergency response and spill contingency plan is recommended. In addition, tank farm operations would need to ensure materials and equipment to stabilize the spill would be readily available.

- Administrative controls involving preparation of truck operating procedures and driver training specific to delivery of sludge shipments to the tank farm were assumed to be in place prior to the shipments.

Defense in Depth

Defense in depth items are addressed in Chapter 8.

7.2.4 Shipping Container Failure With Fire

Vehicular accidents may involve fires as well as collisions or other impact events that could result in failure of the containment boundary of the sludge shipping container. Fires may be caused by spilled or leaking fuel from the Sludge Transportation System, fuel from another vehicle, or flammable cargo from another vehicle. Once spilled, the fuel or flammable cargo is assumed to ignite, causing thermal damage to the sludge shipping container. A fire would also increase the temperature of the sludge, possibly enhancing the volatilization of the radioactive and hazardous chemical constituents of the sludge, and increasing the release from the shipping container relative to pure mechanical damage. This section develops estimates of the frequencies and consequences of vehicular accidents in the tank farm that may involve fires.

7.2.4.1 Scenario Development

Fires may occur in the tank farm as a result of a vehicular accident or a range fire. The likelihood that a range fire affects a shipment of K Basin sludge in the tank farm is beyond extremely unlikely, primarily because it would require the simultaneous occurrence of the range fire and a sludge transfer operation. Tank farm emergency procedures would prevent simultaneous occurrence of a fire involving or threatening the AW tank farm and a sludge transfer activity. In addition, range fires would not involve thermal conditions more severe than the regulatory fire test (800°C fire for 30 minutes), primarily because:

- the combustible material in the tank farm is minimized through housekeeping and surveillance requirements,
- most of the combustible materials are cellulosics that burn at temperatures significantly below 800°C, and
- range fires are typically fast moving and not likely to linger for 30 minutes in any single location, particularly if the combustible material in that location has been minimized.

Consequently, the rest of this section focuses on vehicular accidents as the initiating event for a fire involving the Sludge Transportation System.

Unmitigated Accident Scenario

Damage to the shipping container was postulated to result from a vehicular accident involving a fire. The event tree developed by Fischer et al. (1987) and modified for this assessment (see Figures 7.3 and 7.4) was used as the basis for quantifying the frequencies of fires that could lead to failure of the sludge shipping container. As discussed previously, the frequencies and level of damage from a vehicular accident are a function of the mechanical and thermal conditions applied to the container during and after the event. Catastrophic failure of the containment vessel was judged to be an incredible event, based on the strength and durability of the vessel to withstand severe mechanical and thermal environments and the low probability that severe accident conditions could occur in the tank farm (e.g., travel speeds are restricted, few hard targets are available, and few, if any, external fuel sources are available).

As shown in Figure 7.3, there are two general paths through the event tree that lead to a fire involving the Sludge Transportation System. The first involves an initial mechanical impact event that is followed by a fire. The shipping container may fail as a result of the initial mechanical impact or may fail after it is exposed to the fire. The second general path involves no initial mechanical impact, only a long duration fire that exceeds the regulatory fire test conditions and is assumed to result in container failure. Also, there are two outcome bins that contain fire event; bin 2 - thermal, and bin 4 - mechanical and thermal. Bin 4 represents a larger release and would likely have a lower frequency than bin 2. However, for the purposes of this assessment, the frequencies of these two bin will be combined to calculate the frequency of all fire-related accidents. Consequences will be calculated for only the mechanical and thermal outcome bin as it would bound the consequences of the thermal-only bin.

Unmitigated Accident Frequency

The unmitigated accident frequency was calculated by summing the frequencies given in Table 7.13 for bins 2 and 4. The resulting frequency was calculated to be 1.64E-08 accidents/km. This was converted to an annual frequency using the same shipping assumptions discussed in Section 7.2.3 (i.e., 0.4 km one-way shipping distance in the tank farm, 60 shipments/yr), as shown below:

Annual Frequency	=	Accident rate * Shipping Distance * Annual Shipments
	=	1.64E-08 accidents/km * 0.4 km/shipment * 60 shipments/yr
	=	3.9E-07 accidents/yr

This is near the WHC-CM-4-46 defined boundary between Extremely Unlikely (between 1E-04 and 1E-06 accidents per year) and beyond extremely unlikely (less than 1E-06 accidents per year) accident frequencies. Consequently, this accident scenario is in the **Extremely Unlikely** category, at greatest.

Mitigated Accident Scenario

Potential mitigation measures were discussed in Section 7.2.3 to prevent the occurrence of a vehicular accident in the tank farm. These measures included job-specific training for Sludge Transportation System operators and taking credit for the operator's familiarity with the tank farm and Hanford traffic and road conditions. The conditional probabilities of some of the event tree branches were adjusted to account for these factors, as discussed in Section 7.2.3.

Mitigated Accident Frequency

The mitigated accident frequency was calculated by summing the frequencies of outcome bins 2 and 4 that were given in Table 7.14. The resulting frequency was calculated to be 4.56E-10 accidents/km. This was converted to an annual frequency as follows:

Annual Frequency	=	Bin 2 + 4 * Shipping Distance * Annual Shipments
	=	4.56E-10 accidents/km * 0.4 km/shipment * 60 shipments/yr
	=	1.1E-08 accidents/yr

This is well below the WHC-CM-4-46 defined lower limit for the Extremely Unlikely (1E-06 accidents per year) accident frequency category. Consequently, the mitigated accident scenario is beyond extremely unlikely.

7.2.4.2 Source Term Analysis

This section develops estimates of the radiological and chemical source terms released from the shipping container during and after exposure to a long-duration fire.

Unmitigated Accident Source Term

The release quantity from this accident was calculated as the product of the source inventory of material in the Sludge Transportation System and a release fraction. The release fraction is a function of the mechanical and thermal environment applied to the shipping container and the physical properties of the contained materials. The release from the accident scenarios involving fires would be larger than from a purely mechanical accident because the heat from the fire would increase volatilization of the radioactive and chemical species in the shipping container and would also increase the evaporation rate from a spilled pool of liquid.

The release from this accident scenario was assumed to occur in two stages; 1) release from venting of a pressurized liquid, and 2) release from a burning pool of liquid. First, the thermal environment is postulated to raise the pressure inside the shipping container to its pressure relief setting or to its failure pressure. When the pressure is relieved through actuation of the pressure relief device or failure of the shipping container, material will be expelled through the opening and into the environment. It was assumed that venting or failure would occur at high pressure (greater than 0.35 Mpag or 50 psig) and the sludge has a density greater than 1.2 g/cm^3, such characteristic of a concentrated heavy metal solution. The bounding release fraction under these circumstances was taken to be 1E-03 (DOE 1994). The respirable fraction of the airborne material was assumed to be 0.4 (DOE 1994).

Should the vehicular accident result in containment failure, it was postulated that the material that was not vented at high pressure would spill onto the ground and become available for release. This pool of spilled material would be subjected to the heat from the fire. Therefore, the second part of the release models the material made airborne via evaporation from a spilled pool of liquid. For conservatism, it was assumed that the material would be spilled on a porous surface that enhances evaporation. It was also assumed that the gasoline or fuel for the fire mixes with the spilled sludge, further enhancing the release. The bounding release fraction given by DOE (1994, p. 3-49) for this type of event was assumed to be 5E-03. The fraction of the airborne material that is in the form of respirable particles was given in DOE (1994, p. 3-49) to be 0.4.

The total release quantity from this accident scenario is the product of the source quantity (6,000 L), release fraction, and respirable fraction from both release mechanisms (venting and pool burning). The total release of respirable material is:

Release Quantity	=	Source quantity * Release fraction * Respirable fraction
	=	6,000 L * [(1E-03 * 0.4) + (5E-03 * 0.4)]
	=	14.4 L

Mitigated Accident Source Term

The release from this scenario was assumed not to be time-dependent. Therefore, the time to recover from this accident scenario, including time to extinguish the fire and stabilize the release, is

not relevant to the consequences. Therefore, the unmitigated and mitigated source terms are the same, 14.4 L of respirable material. Furthermore, since the mitigated accident scenario frequency is below extremely unlikely and into the "incredible" range, there is no limit on consequences so a consequence analysis is not required. The mitigation measures applied to control the accident frequency would be sufficient to ensure the risks remain below guidelines.

7.2.4.3 Consequence Analysis

The radiological consequences are the product of the accident source term (L of respirable material released) and the unit liter dose calculated in Section 7.1. The results of these calculations are shown in Table 7.23. Hazardous material release consequences are presented in Table 7.24.

Key Parameters and Assumptions--Unmitigated Accident Analysis

- It was assumed that the Sludge Transportation System would be designed and certified to pass the Type B packaging test requirements specified in 10 CFR 71 (free drop, puncture, thermal, and immersion tests).
- It was assumed that sufficient fuel and an ignition source are available to initiate a long-duration fire in the tank farm.
- The mechanical failure threshold for the sludge shipping container was assumed to be represented by an impact at a 30 mph closing velocity of any impact orientation. The basis for the 30 mph value was discussed in Section 7.2.3.
- The unmitigated accident rate was assumed to be the same as the highway accident rate for general commerce heavy truck shipments. No credit was taken for job-specific procedures and training provided to Hanford truck drivers nor their familiarity with the road and traffic conditions in the tank farm.
- No credit was taken for Hanford-specific target hardness information. Routes representative of public highways were used in the unmitigated scenario analysis.
- It was assumed that failure of the shipping container or actuation of a pressure relief device caused by heating would occur at pressures greater than 0.35 Mpag (50 psig).

Table 7.23. Radiological Consequence Analysis Results for Sludge Shipping Container Accident With Fire

Scenario	Frequency Category	Analysis Result	Radiological Dose to Receptor (rem)	
			Onsite	Offsite
Unmitigated	Extremely Unlikely	Consequence	29,000	23
		Guideline	10	4
		Comparison	ABOVE	ABOVE
Mitigated	Below Extremely Unlikely	Consequence	29,000	23
		Guideline[a]	NA	NA
		Comparison	BELOW	BELOW

(a) Risk evaluation guidelines for accidents that are below extremely unlikely (i.e., frequency less than 1E-06/yr) have not been established. It was assumed here that mitigation measures applied to this accident scenario, which cause the frequency to be less than extremely unlikely, would result in an acceptably low risk.

- It was assumed that material spilled onto the ground from the opening in the containment would spill onto an absorptive surface such as soil. This tends to result in higher suspension releases than if a spill collects in a puddle and does not absorb into the ground.

- No credit was taken in the unmitigated scenario analysis for radiation monitoring and leak detection capabilities which could reduce release quantities by accelerating the time taken to detect and recover from a failed shipping container.

Key Parameters and Assumptions--Mitigated Accident Analysis

The following assumptions and key parameter values were used in the mitigated accident analysis.

- It was assumed that the Sludge Transportation System would be designed and certified to pass the Type B packaging test requirements specified in 10 CFR 71 (free drop, puncture, thermal, and immersion tests).

- It was assumed that the shipping container accidents that have impact velocities below 30 mph would not result in mechanical failure of the Sludge Transportation System.

Table 7.24. Hazardous Chemical Consequence Analysis Results for Sludge Shipping Container Accident With Fire

Scenario	Frequency Category	Analysis Result	Release Quantity[a]	
			Onsite	Offsite
Unmitigated	Extremely Unlikely	Consequence	4.0E-03 L/sec 14.4 L	4.0E-03 L/sec 1.4. L
		Corrosives Guideline	0.58 L/sec 2.0 L	2.8E+02 L/sec 7E+04L
		Toxics Guideline	4.5E-03 L/sec 1.6E-02 L	2.7 L/sec 6.6E+02 L
		Comparison - Corrosives - Toxics	 ABOVE ABOVE	 BELOW BELOW
Mitigated	Below Extremely Unlikely	Consequence	4E-03 L/sec 14.4 L	4E-03 L/sec 14.4 L
		Guideline[b]	NA	NA
		Comparison	BELOW	BELOW

(a) The results and guidelines are presented in terms of the allowable release rate in L/sec (continuous release) and release quantity in L (puff release), as described in Section 7.1.

(b) Risk evaluation guidelines for accidents that are below extremely unlikely (i.e., frequency less than 1E-06/yr) have not been established. It was assumed here that mitigation measures applied to this accident scenario, which cause the frequency to be less than extremely unlikely, would result in an acceptably low risk.

- It was assumed in the mitigated accident frequency calculations that less than 5% of the surface area at the tank farm comprises a "hard" object; i.e., an object that would not deform substantially as a result of a vehicular impact.

- It was assumed that driver experience and training on Hanford roads and within the tank farm would result in a lower accident rate than would be experienced by drivers of heavy trucks on public highways.

- It was assumed that sufficient fuel and an ignition source is available to initiate a long-duration fire in the tank farm.

- It was assumed that there is a 30 mph or lower speed limit in the tank farm (mitigation measure).

- It was assumed that emergency procedures and equipment would be available to mitigate a potential spill of K Basin sludge from a transportation accident.

7.2.4.4 Comparison with Guidelines

Onsite and offsite radiological consequences of the unmitigated accident scenario were determined to be above risk evaluation guidelines for an Extremely Unlikely accident scenario. Application of mitigation measures to the scenario effectively reduces the frequency to beyond Extremely Unlikely such that the accident scenario would be judged to represent an acceptably low risk. In addition, corrosive/irritant and toxic chemical consequences were determined to be below offsite risk guidelines for both unmitigated and mitigated accidents. Corrosive/irritant and toxic chemical exposures were above the onsite guidelines for the unmitigated accident scenario but below guidelines in the mitigated scenario because the mitigated frequency is below extremely unlikely.

7.2.4.5 Summary of Safety-Class SSCs and TSR Controls

Safety SSCs

A preliminary Safety Class Evaluation was performed to support the designation of safety-related systems, structures, and components. The evaluation is presented in Chapter 8.

TSR Controls

The following items were determined to be candidates for TSR controls. Final TSRs will be prepared following completion of the Sludge Transportation System and Sludge Transfer Station design activities.

- A 30 mph maximum speed in the tank farm was assumed in the accident analysis. The speed limit would limit damage to the Sludge Transportation System during a vehicular collision and during collisions with fixed objects. The actual speed limit may be lower but a 30 mph maximum speed would prevent mechanical damage to the shipping container in most instances that exceeds the container's failure threshold.

- The Sludge Transportation System and the tank farm were assumed to be equipped with spill stabilization capabilities to limit the amount of material suspended from a pool of spilled liquid. This capability will reduce the release duration by halting the resuspension of aerosols from the pool of spilled liquid.

- Administrative controls involving preparation of truck operating procedures and driver training specific to delivery of sludge shipments to the tank farm were assumed to be in place prior to the shipments.

Defense in Depth

Defense in depth items are addressed in Chapter 8.

7.2.5 Tank AW-105 Overpressurization

As the sludge enters Tank AW-105, gases will leave the sludge by mass-transfer mechanisms. Tank AW-105 is currently actively ventilated; all exhaust gases pass through two HEPA filters designed in series in the exhauster at a ventilation flow rate of 1,000 cfm. During the offloading process, K Basin sludge will be pumped from the Sludge Transportation System through the Sludge Receiving Station into the AW-105 slurry distributor. The sludge will then fall by gravity from the nozzle of the slurry distributor onto the existing waste in the tank. A portion of gases will enter the tank vapor space resulting in increased pressure in the tank dome. Increasing tank dome pressure may be caused by any or all of the following mechanisms:

- radiolytic heat converting water to steam
- displacement of air due to waste transfers
- natural breathing of the tank due to changes in atmospheric pressure
- natural convection current due to thermal gradients
- material incompatibilities, corrosion.

Under normal operating conditions, tank dome pressure is controlled by a pressure monitor system and, as mentioned, gases or steam may be swept out of the tank vapor space by the exhaust system.

The following scenario deals with releases of radioactive and toxic materials to the atmosphere and/or environment due to the overpressurization condition of Tank AW-105. Given the increased pressure in the tank dome, additional failures such as the pressure monitor and/or ventilation system component failures may lead to failures of other tank systems, components, or structures. Mechanisms that could lead to an unfiltered release pathway include: 1) structural failure of the ventilation system; 2) HEPA filter blowout; 3) rupture of tank riser or pump pit; and 4) tank dome failure. As designed, differential pressures across the HEPA filters are measured; however, failure to detect high HEPA loading may result in structural damage, and if the pressure continues to rise it was conservatively assumed that the tank dome integrity could be compromised.

Two event trees were developed for this scenario to provide the mathematical framework for the estimation of accident sequence frequencies: one for unmitigated accident scenarios and the other for mitigated accidents. Event tree analysis is a well-developed tool for systematically developing accident progression, starting with an accident-initiating event and proceeding to consequences. The systematic approach employed in developing event trees typically results in the identification of many more accident sequences for a given initiating event and provides a basis for quantitative estimates of accident sequence frequencies.

Event tree models are developed assuming that an accident begins with an initiating event where the occurrence sets in motion a series of events. Depending on the combination of events (primarily but not limited to safety system failures) that occur after the initiating events, different outcomes may occur, ranging from accident sequences with no impacts to sequences with severe consequences. Each path through the event tree, beginning with a specific initiating event and ending

in a specific outcome, represents an accident sequence. The event tree is developed by drawing branches from the initiating event that represent the possible outcomes of the second event in the header. Each branch symbolically represents the success or failure of the second and subsequent header events. The upper branch represents event success, and the lower branch represents event failure. A success outcome means that the event occurs as it is stated in the header. A failure outcome means that the opposite of the event occurs. Probabilities are assigned to each branch in the event tree. In some cases, fault tree analysis was performed to calculate the branch probabilities. The initiating event frequencies and branch probabilities are mathematically combined to quantify the event tree. To simplify the results, the frequencies for all the paths with the same end-state often are summed to provide an estimate of the total frequency of each end-state.

7.2.5.1 Accident Scenario Development

As mentioned, two event trees were developed to model accidents in which significant amounts of gases are released from Tank AW-105; one for an unmitigated scenario and the other for a mitigated scenario. A computer code IRRAS 5.50 (Russel et al. 1992) was used for both of the development and quantification processes. The tank overpressurization event trees start with the initiating event named "PRESS" which represents all initiating events arising from offload and storage of K-Basin sludge that results in a pressure change. Given the initiator occurs, additional failures such as ventilation system failure, HEPA failure (i.e., plugged), dome pressure monitor system failure, and/or failure to respond to an alarm (human error) could lead to tank overpressurization. In this scenario, two initiating events that could lead to increased pressure were identified and analyzed.

The first initiator for a rise in tank pressure is a combination of pressure changes due to radiolytic heat converting water to steam, natural breathing of the tank due to changes in atmospheric pressure, natural convection current due to thermal gradients, and material incompatibility. Addition of incompatible chemicals, pyrophoric reactions, organic-nitrate reactions, generation of flammable gases such as ammonia or hydrogen, and criticality are also included in this initiator. Even though sludge will be sampled, characterized, and chemically adjusted before entering Tank AW-105, human error may still occur. As described in Chapter 3, prior to transferring waste, a number of activities will be performed by tank farm operations. These activities include verifying the waste chemistry (via sampling and characterization) to be sure that the K Basin sludge to be transferred is compatible with the receiving tank waste, and performing criticality safety analyses and implementing criticality safety controls to ensure that stored waste will remain in a sub-critical state. Human error may occur during these activities, so the human error probability during these activities is included in this initiating event frequency.

The second initiator for a rise in tank pressure is the pressure increase caused by the Sludge Transportation System pump during offloading operations. Sludge enters Tank AW-105 from the slurry distributor by gravity flow; however, it will be pumped from the shipping container to the slurry distributor. The pump unit is assumed to be rated for a maximum capacity of 150 gpm at 50 psig. As sludge enters the tank, the tank dome volume would continue to decrease and dome pressure would increase as a result of the transfer pump injecting slurry into the tank.

As described in Section 3.3, Tank AW-105 is actively ventilated and all exhaust gases pass through two HEPA filters in series. However, if the pressure in the tank dome is raised and actions are not taken to halt the increase, HEPA filters may fail (blowout) and ventilation system, tank risers, and/or pump pits may suffer some structural damage. If the pressure continues to rise, the integrity

of the tank dome may be compromised. However, the tank dome, which can withstand internal pressures up to 55-60 psi, would not be vulnerable to failure unless a severe fire or run-away chemical reaction occurs and penetrations are assumed to be sealed. The addition of a relatively small quantity of K Basin sludge is extremely unlikely to produce pressures that exceed the tank dome failure threshold, particularly if ventilation flowpaths and penetrations are clear. The outcomes shown in the event tree model depend upon the locations of the failures and the effectiveness of the pressure mitigation actions taken. The potential outcome descriptions are provided in Table 7.25. As shown, the consequences range from no release to major airborne particulate and volatile material releases.

Unmitigated Accident Scenario

The event tree shown in Figure 7.5 models the unmitigated accident scenarios. No credit was taken in the event tree for physical barriers or administrative controls. In addition, no credit was taken for training, procedures, or qualified equipment. In this event tree model, the model starts with an initiator named "PRESS" which represents all initiating events as described in the previous section. Given that the initiating event occurs, the HEPA filter may blow out if the dome pressure rises above its failure threshold. The top event named "HEPA" is placed next in the event tree to represent the conditional HEPA filter/pre-filter blowout given the pressure changes in the tank. As designed, a pressure of 10 kpa (1.5 psig) or higher may cause HEPA filter damage. The HEPA filter is 24 in. x 24 in. x 5-7/8 in., rated for 500 cfm at 1 in-wg, and is mounted together with a 24 in. x 24 in. x 4 in. pre-filter in the manufacturer's standard stainless steel housing. Once the HEPA filter begins to leak, the pressure would be released and as long as the intensity of the initiating event has decreased, the dome pressure would begin to decline. However, if the HEPA filter and/or pre-filter are plugged, and if the tank dome pressure continues to rise, then the tank dome would begin to crack and fail. In this case, a major significant release would occur, and is considered the worst-case scenario. After the tank dome fails, the pressure was assumed to be relieved and no further damage would occur (although the release may continue as an unfiltered pathway has been opened). The top event named "TDI" which represents tank dome failure is placed in the event tree to address this concern. The top event "HVAC-SI" provides the option of modeling a failure of ventilation structures as an alternative pathway to the environment (i.e., one in which the tank dome remains intact). Finally, the "RISER" top event is placed last in the model to represent the tank risers and/or pump pit rupture due to overpressurized condition. From the unmitigated event tree, five accident sequences and three different outcomes were identified. The outcomes and accident frequencies for these sequences are discussed in the next section.

All six of the AW tanks are connected to a common ventilation header. This means that there are flowpaths among these tanks that, if open, would be capable of relieving some or all of the excess pressure generated in any single tank. For this conservative analysis, it was assumed that all of these flowpaths are closed and all pressure generated in Tank AW-105 would be directed towards the AW-105 tank dome and exhaust filtration system.

Table 7.25. Overpressurization Event Tree Outcome Descriptions

Outcome	Description
NO-RELEASE	No exposure to atmosphere and/or environment.
VOLATILE-RELEASE	Volatile release to atmosphere caused by either HEPA filter blowout, ventilation system structural failure, tank risers rupture, or pump pits rupture.
MA-VOLATILE-REL	Major volatile release to atmosphere contributed from more than one system/component (i.e., ventilation system, HEPA filter, tank risers, pump pits, etc.) structural failures.
MA-PAR-VOLA-REL	Major particulate and volatile release to atmosphere and environment (worst-case).

Unmitigated Accident Frequency

The unmitigated event tree was quantified to estimate the frequencies of the various outcomes. Table 7.26 provides the initiator frequencies, top event probabilities, and the bases for the values. The quantification process involves multiplying across the top event probabilities to estimate the sequence probabilities and summing the sequence probabilities in each outcome bin (for those that have the same consequence). Once this was complete, each outcome bin probability was multiplied by the initiating event frequencies to provide the accident frequencies.

The following example was prepared to illustrate the event tree quantification process for a single accident scenario. The scenario selected is Sequence #3 in Figure 7.5. Following the path through the event tree for this sequence, this is a combination of the initiating event named "PRESS", top event "HVAC-SI" which represents ventilation system integrity impacted, and top event "RISER" which represents tanks risers and/or pump pits integrity impacted. The probability of this sequence is the product of these three failure probability values and is shown in the second column of the figure (i.e., 4.50E-04/demand). The outcome bin or consequence associated with this accident sequence is provided in the last column of the figure. This sequence probability should be summed with other sequence probabilities that have the same outcome; in this case there is only one sequence in this outcome bin. At this point, the outcome bin probability was multiplied by the initiating event frequencies provided in Table 7.27 to estimate the accident frequencies.

The descriptions of the accident outcomes and top events are provided in Tables 7.25 and 7.26. The unmitigated accident frequencies for initiating events of the PRESS class are summarized in Table 7.27. Note that these accident frequencies are provided separately for each accident outcome. The total unmitigated accident frequency resulting in major particles and volatile release "MA-PAR-VOLA-REL" was estimated to be 2.79E-05/yr. The total unmitigated accident frequency resulting in major volatile release "MA-VOLATILE-REL" was estimated to be 1.40E-05/yr. The

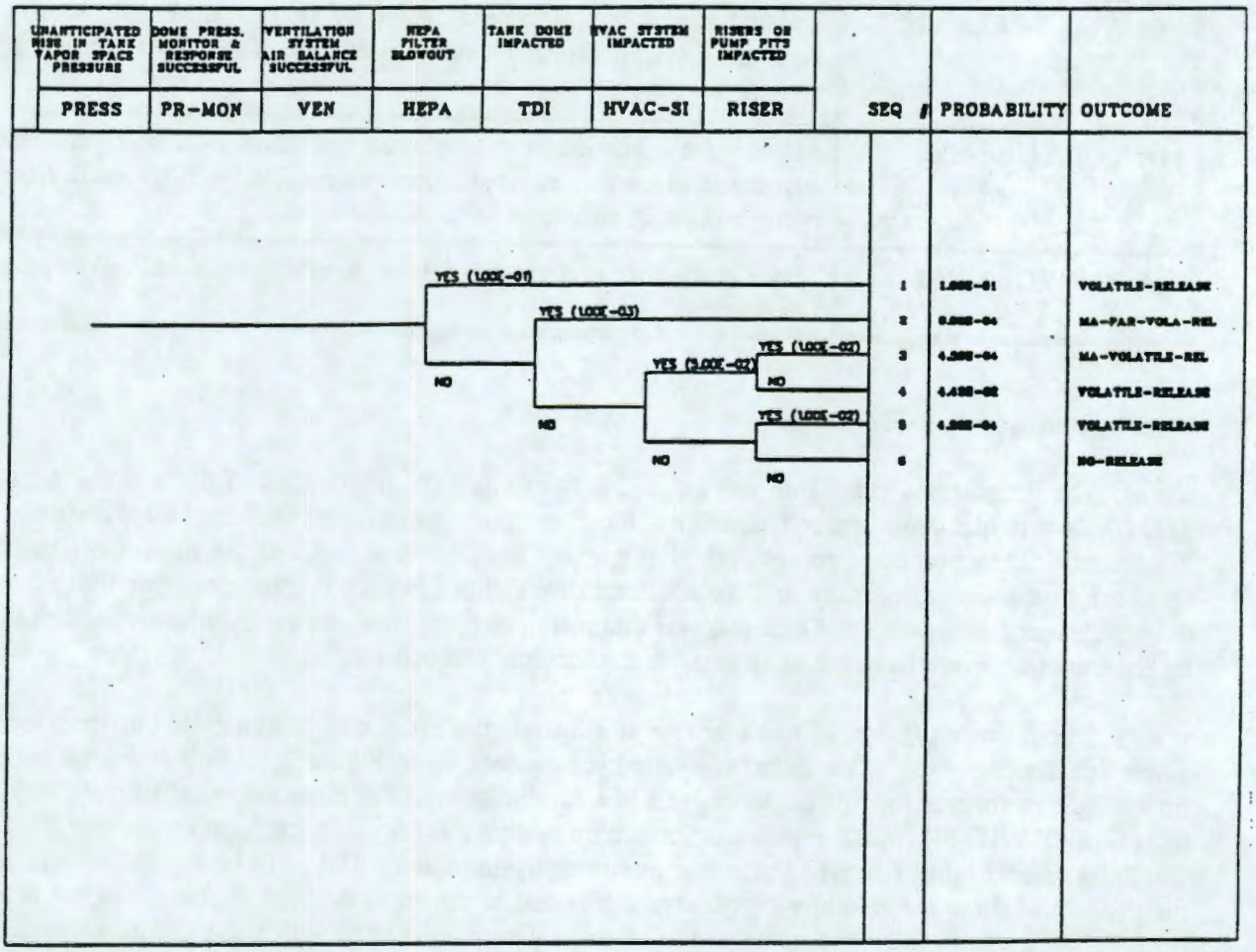

Figure 7.5. PRESS Unmitigated Event Tree

Table 7.26. Event Tree Header Descriptions and Branch Probabilities

Top Event Name	Event Description	Probability	Rationale/Basis
PRESS	Initiating event	1.00E+00	Assigned value - Will be multiplied by the initiating event frequencies
HEPA	HEPA filter blowout	1.00E-01	Engineering judgment - For each train 2 filters are in series. Failure of this event involves both filter failures. Differential pressures across the HEPA filters are measured. Failure to detect high HEPA loading and failure to shut down the exhauster may result in HEPA blowout.
TDI	Tank dome integrity impacted	1.00E-03	Engineering judgment - assume 1 out of 1000 times tank pressure causes containment breach
HVAC-SI	HVAC system integrity impacted	5.00E-02	Engineering judgment - Assume 1 out of 200 times tank pressure causes HVAC structural damage.
RISER	Tank risers or pump pits integrity impacted	1.00E-02	Engineering judgment - Assume 1 out of 100 times tank pressure causes tank risers and/or pump pits integrity impacted

total unmitigated accident frequency resulting in volatile release "VOLATILE-RELEASE" was estimated to be 4.50E-03/yr. The highest individual unmitigated accident frequency was found to result from the combination of the initiator associated with overpressure from mixing incompatible chemicals (approximately neutral pH K Basin sludge and high-pH tank waste) during transferring waste and failure of HEPA filtration, which is 3.00E-03/yr. If credit were not taken for the HEPA filter, the frequency of the unmitigated scenario is Anticipated.

Mitigated Accident Scenario

The mitigated accident event tree is shown in Figure 7.6. The differences between mitigated and unmitigated accident scenarios are that credit was taken for the dome pressure monitor and the HVAC system response when tank dome pressure increases. As shown in the figure, two top events were added to the unmitigated event tree, one is named "PR-MON" which represents the dome pressure monitor system and the associated recovery action and the other is "VEN" which represents the air balance function provided by the HVAC system. Failure of these systems could lead to structural failure of the tank dome, HEPA filter, tank risers, pump pits, etc., and subsequent opening

Table 7.27. Initiating-Event PRESS-Class Accident Frequencies for Unmitigated Accident

ID	Initiating Event	Init. Event Fre. Point Estimate Basis	Init. Event Frequency (per year)	End-State	End-State Pro.	Accident Frequency (per year)
PU1	Pressure changes due to material incompatibility	From SWP-SA "WHC-SD-WM-SAD-036"	1.00E-03	MA-PAR-VOLA-REL	9.00E-04	9.00E-07
PU2				MA-VOLATILE-REL	4.50E-04	4.50E-07
PU3				VOLATILE-RELEASE	1.45E-01	1.45E-04
PU4	Additional pressure during transferring waste (total dome pressure > 1000 cfm)	Expert judgment	3.00E-02	MA-PAR-VOLA-REL	9.00E-04	2.70E-05
PU5				MA-VOLATILE-REL	4.50E-04	1.35E-05
PU6				VOLATILE-RELEASE	1.45E-01	4.35E-03

of an unfiltered pathway to the environment. Based on the mitigated event tree model, five accident sequences and three different outcomes were identified. The outcome bin descriptions were provided in the Table 7.25.

As mentioned above, credit was taken for the availability of the pressure monitor system. Tank AW-105 is equipped with a pressure/vacuum measurement system. The function of the primary tank confinement pressure/vacuum system is to monitor the pressure in the primary tank. The vacuum limit ensures that the primary tank structural integrity is not jeopardized. Waste tank vapor space vacuum is monitored by magnehelic gages that are located on tank risers or in local instrument buildings. There are also pressure recorders/transmitters and pressure switches that will activate when their limits are exceeded by loss of the tank ventilation system or process upset. The switches will activate a local audible alarm and they are also monitored by CASS which will automatically print an alarm report.

Credit was also taken for the capabilities of the ventilation system to monitor and control air flows into the tank (i.e., air balance). Under normal operating conditions, active ventilation will be maintained for Tank AW-105. One function of active ventilation is to force tank vapors and airborne particulates to travel through the HEPA filters, thus controlling the spread of contamination to the environment. The ventilation system also enhances tank air flow and pressure control capability, and provides control capability.

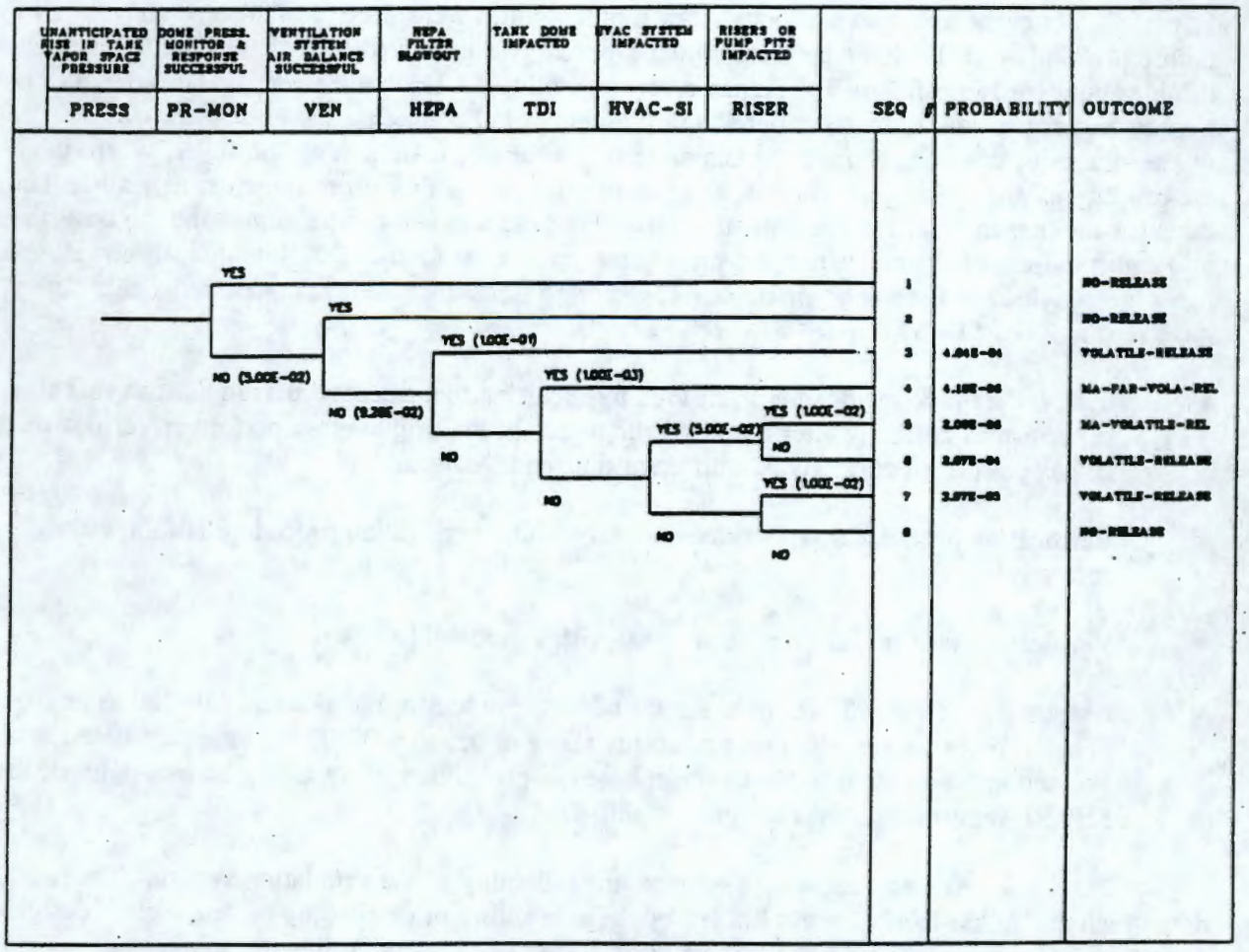

Figure 7.6. PRESS Mitigated Event Tree

Mitigated Accident Frequency

The adjusted values of the affected accident rate and branch probabilities used in the mitigated accident analysis are discussed in this section.

In this event tree, two additional branch probabilities were added as indicated above. The failure probability of the dome pressure monitor system was estimated to be 5.00E-02. This value includes both hardware failure and human error probabilities. The human error is considered to have a much higher probability than the unreliability of automated or mechanical equipment. In worker-intensive operations, often the human-error probability is quite high; however, where there are procedures and training of workers, the human-error probability drops quite dramatically. The basis for the human error assignments used throughout the accident quantification and the basis used to quantify failure rates and frequencies are summarized in the following: (Note that, these values and bases are provided in the *Rotary Mode Core Sampling in Flammable Gas Single Shell Tanks Safety Assessment*, WHC-SD-WM-SAD-035, WHC 1996d).

- Independent task verification is ensured by requiring that a second person verifies that a task is performed correctly after a task is completed, or the original task performer verifies that a task is performed correctly at a different time and location.

- Verification procedures are written correctly, and a verification procedure is followed correctly.

- Verification fails to discover a task error with a probability of 0.1.

- Assignment of the 5.0E-02 failure probability for judgment based tasks, referred to as the SHARP report, gives a failure probability range of 0.5 to 5.0E-03 for judgment-based actions. For actions considered to be judgment-based, a probability of 5.0E-02, the mid-point of the SHARP report range, was assigned in this SA.

Fault tree analysis was used to estimate the reliability of the ventilation system. The level of detail included in the fault tree was limited by the availability of detailed up-to-date system design and operating information. The system models were developed using the following sources of information:

- existing Hanford Contractor safety studies

- system schematics and operating procedures provided by Hanford Contractors

- verbal information from Hanford Contractor cognizant engineers and technicians

- published sources of data for component reliability values.

- engineering judgment.

Each of the six AW waste tanks has an air inlet station connected to a dedicated 12" tank riser. The air inlet stations are intended to be the only paths by which air can enter the waste tanks. The purpose of the air inlet stations is to enhance tank air flow and pressure control capability, and to

provide a filtered pathway for air to exit each tank should tank pressure(s) exceed atmospheric pressure.

Primary components of each air inlet station include an air flow controller, pre-filter, HEPA filter, and 12 in. isolation butterfly valve. A vacuum breaker is connected in parallel with the flow controller to limit tank negative pressure in the event that the flow control capability is lost. The air flow controller and vacuum breaker devices are automatic, passively-operated devices.

An alternate tank air inlet line, containing an orifice plate and isolation valve is connected in parallel with each air inlet station for use during air inlet station maintenance or in the event that the normal air path through the air inlet station becomes obstructed.

The two primary tank ventilation exhaust subsystems are identified as K1-1 and K1-2. The purpose of the K1-1 and K1-2 Systems is to provide a 0.25 in. to 4.0 in. WG vacuum on all six tanks at a total flow rate of 1,000 cfm. Additional information can be found in Chapter 3.0. Even though the ventilation exhaust subsystems are designed with redundancy, one system could be unavailable due to maintenance or filter replacement.

Figure 7.7 shows the top logic of the ventilation system fault tree model. The completed fault tree model can be found in Appendix E. Failure of the ventilation system to maintain the tank pressure is modeled as an AND gate, named "VEN," with inputs from 1) monitor/control systems failure and 2) ventilation system failure. Failure of the monitor/control systems (modeled as an OR gate, named "VEN7") may result from equipment failure, alarm systems failure, loss of power, and/or an operator failing to respond. Ventilation system failure is modeled as an OR gate, named "VEN1," with inputs from air inlet system failure and exhauster system failure. Failure of the air inlet system (modeled as an OR gate, named "VEN11") may result from filter failure/plugged, valve failure/plugged, vacuum breaker failure, air flow controller failure, and/or human errors. Failure of the exhauster system is modeled as an OR gate, named "VEN12," with 2 inputs (moisture separator path failure and exhauster path failure).

The HVAC fault tree and system quantification were modeled and performed using the IRRAS 5.50 computer code. Appendix E provides the basic event failure rates, probabilities, and the basis/rationale behind these values. Based on these values the ventilation system unavailability was estimated to be 9.28E-02/Demand. Table 7.28 shows the minimal cut sets of the ventilation system fault tree. Based on the results, failure to recover power is concluded to be the most important contributor to system failure. Isolation butterfly valve inadvertent closure and HEPA filters 205A and 205B failure are also identified as important contributors.

Table 7.29 shows all top event probabilities that were displayed in the mitigated event tree model and their associated rationales. Table 7.30 provides the accident consequences and probabilities for the mitigated accident scenario. These probabilities were multiplied by the initiating event frequencies as discussed in the unmitigated accident scenario to estimate the mitigated accident

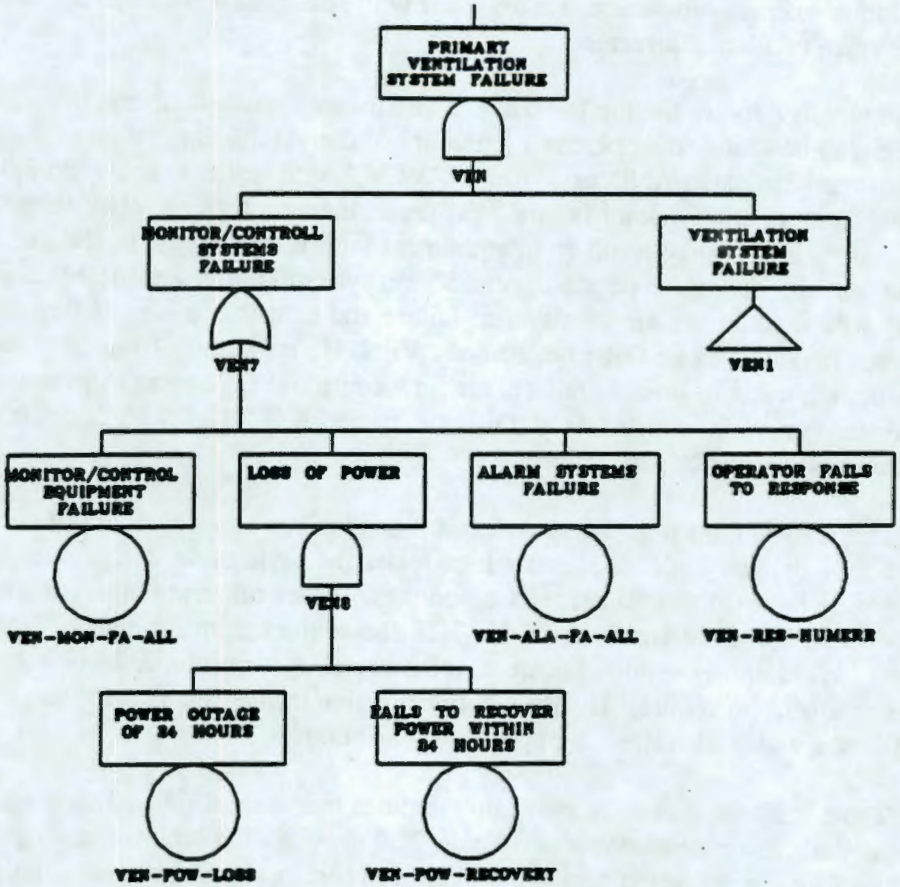

Figure 7.7. Primary Ventilation System Fault Tree (Top Logics)

Table 7.28. Primary Ventilation System Fault Tree Minimal Cut Sets

Cut Set No.	% Total	% Cut Set	Prob/ Freq.	Cut Sets
1	53.8	53.8	5.0E-002	VEN-POW-LOSS, VEN-POW-RECOVERY
2	65.1	11.3	1.0E-002	VEN-ALA-FA-ALL, VEN-FAN-FA-K151, VEN-FAN-FA-K152
3	69.2	4.1	3.8E-003	VEN-ALA-FA-ALL, VEN-FAN-FA-K151, VEN-HEA-FA-HTS2
4	73.3	4.1	3.8E-003	VEN-ALA-FA-ALL, VEN-FAN-FA-K152, VEN-HEA-FA-HTS1
5	76.6	3.2	2.9E-003	VEN-ALA-FA-ALL, VEN-DE-FA-K111, VEN-DE-FA-K112
6	79.4	2.8	2.6E-003	VEN-FAN-FA-K151, VEN-FAN-FA-K152, VEN-RES-HUMERR
7	81.9	2.4	2.2E-003	VEN-ALA-FA-ALL, VEN-FAN-FA-K151, VEN-OPE-DIAGNOSE
8	84.1	2.2	2.1E-003	VEN-FAN-FA-K151, VEN-FAN-FA-K152, VEN-MON-FA-ALL
9	85.6	1.4	1.3E-003	VEN-ALA-FA-ALL, VEN-HEA-FA-HTS1, VEN-HEA-FA-HTS2

Mincut Upper Bound 9.282E-002

frequencies for initiating events of the PRESS class. These values are provided in the last column of this table. The accident frequencies rang from 2.13E-05/yr (accident sequence ID "PM6") to 4.18E-09/yr (accident sequence ID "PM1"). Except the accident frequency for sequence ID "PM6," which is 2.13E-05/yr, all other accident frequencies were identified as beyond extremely unlikely (< 1.0E-06/yr) in terms of the WHC-CM-4-46 definitions. The total mitigated accident frequency resulting in major particles and volatile release "MA-PAR-VOLA-REL" was estimated to be 1.29E-07/yr. The total mitigated accident frequency resulting in major volatile release "MA-VOLATILE-REL" was estimated to be 6.48E-08/yr. The total mitigated accident frequency resulting in volatile release "VOLATILE-RELEASE" was estimated to be 2.20E-05/yr. For conservatism and to account for uncertainties in the component failure rates, a frequency of Unlikely was assigned to this scenario; i.e., tank overpressurization from a chemical reaction caused by the addition of unadjusted K Basin sludge. Releases of anything other than volatiles were determined to be below extremely unlikely. The highest individual unmitigated accident frequency was found to result from the combination of initiator associated with additional pressure during transferring waste and HEPA filter blowout, which is 3.00E-03/yr. The most important accident sequence (highest accident frequency) was found to be a combination of pressure changes resulting from K Basin sludge offloading, dome pressure monitor failure, ventilation system failure, and HEPA filter blowout.

Table 7.29. Mitigated Event Tree Header Descriptions and Branch Probabilities

Top Event Name	Event Description	Probability	Rationale/Basis
PRESS	Initiating event	1.00E+00	Assigned value - Will be multiplied by the initiating event frequencies
PR-MON	Dome pressure monitor system success	5.00E-02	Engineering judgment - Operator fails to depressurize tank pressure is also included
VEN	HVAC system air balance success	9.28E-02	From fault-tree analysis
HEPA	HEPA filter blowout	1.00E-01	Engineering judgment - For each train 2 filters are in series. Failure of this event involves both filter failures. Differential pressures across the HEPA filters are measured. Failure to detect high HEPA loading and failure to shut down the exhauster may result in HEPA blowout.
TDI	Tank dome integrity impacted	1.00E-03	Engineering judgment - assume 1 out of 1000 times tank pressure causes containment breach
HVAC-SI	HVAC system integrity impacted	5.00E-02	Engineering judgment - Assume 1 out of 200 times tank pressure causes HVAC structural damage.
RISER	Tank risers or pump pits integrity impacted	1.00E-02	Engineering judgment - Assume 1 out of 100 times tank pressure causes tank risers and/or pump pits integrity impacted

7.2.5.2 Source Term Analysis

The source terms and associated consequences of a release of K Basin sludge from Tank AW-105 were examined in relation to the source terms and consequences calculated in the ongoing TWRS BIO (LMHC 1997). The radiological source terms and consequences of a release from a DST are analyzed in WHC-SD-WM-SARR-016 (WHC 1996b) and WHC-SD-WM-SARR-037 (Cowley 1996) and those for toxic materials are analyzed in WHC-SD-WM-SARR-011 (WHC 1996b). The methodology used to calculate the source term is the same as that described in the TWRS BIO (LMHC 1997) and in supporting calculation notes entitled *Chemical Reaction in a DCRT* (Powers, Marusich, and Braun 1996). Appropriate adjustments were made to address K Basin sludge properties rather than DST wastes and DST AW-105 parameters rather than a typical DCRT.

Table 7.30. Initiating-Event PRESS-Class Accident Frequencies for Mitigated Accident

ID	Initiating Event	Init. Event Fre. Point Estimate Basis	Init. Event Frequency (per year)	End-state	End-State Proba-bility	Mitigated Frequency (per year)
PM1	Pressure changes due to material incompati-bility	From WHC-SD-WM-SAD-036	1.00E-03	MA-PAR-VOLA-REL	4.18E-06	4.18E-09
PM2				MA-VOLA-REL	2.09E-06	2.09E-09
PM3				VOLATILE-RELEASE	7.11E-04	7.11E-07
PM4	Additional pressure during transferring waste (Total dome pressure > 1000 cfm)	Expert judgment	3.00E-02	MA-PAR-VOLA-REL	4.18E-06	1.25E-07
PM5				MA-VOLA-REL	2.09E-06	6.27E-08
PM6				VOLATILE-RELEASE	7.11E-04	2.13E-05

Unmitigated Accident Source Term

This accident scenario involves offloading a full container load (6 m^3) of worst-case K Basin sludge which has not been chemically adjusted (pH $\approx$ 7- 8) into highly-alkiline AW-105 (pH $\approx$13), causing an acid/base neutralization reaction. The reaction heats up the sludge/DST waste mixture. The aerosols generated by this heating effect were assumed to be transported through the HVAC system and released unfiltered to the environment.

The molarity of a shipment of K Basin sludge is not known so it was conservatively assumed to be equivalent to 20% HNO_3 or 3.538 mol/L. The molarity of the alkiline DST waste was assumed to be 10 mol/L (Powers, Marusich and Braun 1996). Thus, the volume of DST waste neutralized is:

Volume neutralized = (6000 L) (3.358 mol/L / 10 mol/L) = 2,123 L

The total volume of sludge and waste involved in the neutralization reaction is then 8,123 L.

According to Powers, Marusich, and Braun (1996), the heat of reaction to use in this calculation is -5.7757E+04 J/mol. The reaction energy is then:

Reaction energy = | Acid molarity * Volume * Heat of reaction |
= | 3.538 mol/L * 8,123 L * -5.7757E+04 J/mol |
= 1.226E+09 J

Using this heat of reaction, the temperature increase from the neutralization reaction can be calculated as follows:

Temperature increase	=	(Heat of reaction) / (Volume)(Waste density)(Heat capacity)
	=	1.226E+09 J / (8.123 m^3)(1000 kg/m^3)(4200 J/kg-K)
	=	35.95 K (or °C) = 96.7°F

To check for boiling conditions, the final waste temperature was calculated assuming the initial solution temperature was 54.44°C (Powers, Marusich, and Braun 1996). Adding the above temperature increase to the initial temperature results in a final solution temperature of 90.38°C. This is below the boiling point of the neutralized solution, estimated to be about 115°C.

The source term from this accident was calculated using the following formula:

Source Term	=	Quantity Available for Release	*	Aerosol Release Fraction	*	Condensation Fraction

— or —

ST = Q * ARF * CF

Derivation of the parameter values used in this assessment are described in the following subsections.

Quantity Available for Release

A total of 8,123 L of waste are available for release. Of this, 6000 L are K Basin sludge material and 2123 L are DST waste, assumed to consist of 1/3 DST solids and 2/3 DST liquids.

Aerosol Release Fraction

The ARF for this scenario was taken to be 3E-05, based on recommendations given in DOE-HDBK-3010-94 (DOE 1994). This value is representative of releases from heated solutions in flowing air without noticeable bubbles breaking on the surface of the solution. This is representative of the actual solution conditions in the tank created by the neutralization reaction as it was shown previously that boiling would not occur. The respirable fraction of the aerosols generated was conservatively assumed to be 1.0.

Condensation Fraction

A fraction of the material in the released aerosol will condense on cool surfaces inside the tank and the HVAC system. The method employed by Powers, Marusich, and Braun (1996) to estimate the fraction of aerosol that condenses within the tank was also used here with appropriate adjustments. For example, the above reference calculated condensation fraction for a DCRT and this assessment will estimate the condensation fraction for a DST.

The condensation fraction was taken to be the ratio of the amount of energy that can be transferred through the DST walls to the energy generated from the neutralization reaction. This ratio was calculated using the general heat transfer equation shown below:

$$Q = hA\Delta T$$

where:

Q	=	heat transfer rate
h	=	heat transfer coefficient for steam mixed with air
A	=	heat transfer area
ΔT	=	temperature difference across tank walls

To calculate the heat transfer rate across the tank walls, the value of the heat transfer coefficient, h, was taken to be 200 BTU/hr-ft^2-°F (Powers, Marusich, and Braun 1996) and the temperature difference across the tank walls was taken to be the temperature difference before and after the reaction (i.e., the outer tank wall temperature was assumed to be the same as the initial solution temperature of 54.44°C and the inner tank wall temperature was assumed to be at the final solution temperature). Therefore, ΔT is 35.94°C (96.7°F).

The heat transfer area used in the heat transfer equation was calculated assuming only the inner tank wall area above the liquid surface in the tank is available for heat transfer. This would include about the upper 1/3 of the tank wall. Heat transfer into the waste and through the tank dome is neglected. Therefore, the heat transfer area, A, is about 2.83E+03 ft^2 (π * 75 ft diameter * 12 ft high). Substituting these values into the heat transfer equation yields the heat transfer rate across the tank walls:

$$\begin{aligned} Q_{walls} &= (200 \text{ BTU/hr-ft}^2\text{-°F})\ (2.83\text{E+03 ft}^2)\ (96.7\text{°F}) \\ &= (5.473 \text{ E+07 BTU/hr})\ (1055 \text{ J/BTU})\ (1 \text{ hr/3600 sec}) \\ &= 1.604\text{E+07 J/sec} \end{aligned}$$

The denominator in the condensation fraction relationship is the heat generation rate from the neutralization reaction. This parameter was calculated by dividing the neutralization reaction energy calculated previously by the duration of the reaction. The duration may be as much as 30 minutes to reflect the pumping time it takes to transfer all 6 m^3 of sludge from the shipping container. Using this reaction duration would result in 100% of the aerosols being condensed inside the tank. It was found that as long as the reaction duration is more than about 1.5 minutes, all of the aerosols would condense on the relatively cool tank wall surfaces. Therefore, a condensation fraction of 0.99 (i.e., 99% of the aerosols condense inside the tank and 1% are released) is believed to be conservative.

Results of Unmitigated Source Term Analysis

The source term (ST) is the product of the quantity of material available for release (Q), the aerosol release fraction (ARF), and the condensation fraction (CF). In this scenario, there are DST waste and sludge components to the source term. The two source term componsnts were calculated as follows:

$$\begin{aligned} ST_{Slidge} &= Q_{sludge} * ARF_{sludge} * CF_{sludge} \\ &= 6000 \text{ L} * 3\text{E-05} * (1 - 0.99) \\ &= 1.8\text{E-03 L} \end{aligned}$$

$$\begin{aligned} ST_{DST} &= Q_{DST} * ARF_{DST} * CF_{DST} \\ &= 2123 \text{ L} * 3\text{E-05} * (1 - 0.99) \\ &= 6.4\text{E-04 L} \end{aligned}$$

Therefore, the total unmitigated soure term for this accident scenario consists of 1.8E-03 L of sludge and 6.4E-04 L of DST waste.

Mitigated Source Term

Only a single mitigation measure was credited in the mitigated accident analysis; i.e., a control to verify that the appropriate chemical adjustments (pH control) are made to the sludge before it is transferred into the tank. This has the effect of reducing the accident frequency by one frequency category but was assumed to have no effect on the consequences. Therefore, the mitigated source term was assumed to be the same as the unmitigated source term.

7.2.5.3 Consequence Analysis

The unmitigated and mitigated consequences of this accident scenario are described in the following subsections.

Unmitigated Consequences

The consequences of this accident scenario are the sum of the consequences of the releases of K Basin sludge and DST wastes. The consequences of the sludge release are the products of the unmitigated source term and unit doses from sludge releases to offsite and onsite MEIs. The unit doses from long-duration releases were used. These calculations are shown below:

Onsite MEI: $C_{sludge} = ST_{Sludge} * \text{Onsite Unit Dose}_{Sludge}$
$= 1.8E\text{-}03\ L * 670\ Rem/L$
$= 1.21\ Rem$

Offsite MEI: $C_{sludge} = ST_{Sludge} * \text{Offsite Unit Dose}_{Sludge}$
$= 1.8E\text{-}03\ L * 1.2\ Rem/L$
$= 2.2E\text{-}03\ Rem$

The unmitigated consequences of the DST waste release was estimated by first calculating a composite unit liter dose (ULD) for DST wastes consisting of 1/3 DST solids and 2/3 DST liquids. The ULDs for DST liquids and solids were taken from Cowley (1996) and were 6.1E+05 Rem/L amd 5.3E+07 Rem/L, respectively. The composite ULD is as follows:

$ULD_{Composite} = 1/3\ (ULD_{DST\ solids}) + 2/3\ (ULD_{DST\ liquids})$
$= 1.81E+07\ Rem/L$

The DST waste release consequences were calculated using the TWRS BIO methodology, as follows:

$$Dose = ST * ULD * \text{Breathing Rate} * X/Q$$

The source term and ULD were calculated above. The breathing rates were assumed to be 3.3E-04 m^3/sec for the onsite receptor and 2.7E-04 m^3/sec for the offsite receptor (Van Keuren 1996). The X/Q values (atmospheric dispersion parameters) were taken from Van Keuren (1996) and amount to 0.0341 sec/m^3 for the onsite receptor location and 2.83E-05 sec/m^3 at the offsite receptor location.

Substituting these values into the dose equation above gives the following results:

Onsite: C_{DST} = Q * ULD * Breating rate * X/Q
= (6.73E-04 L) (1.81E+07 Rem/L) (3.3E-04 m^3/sec) (0.0341 sec/m^3)
= 0.13 Rem

Offsite: C_{DST} = (6.73E-04 L) (1.81E+07 Rem/L) (2.7E-04 m^3/sec) (2.83E-05 sec/m^3)
= 8.8E-05 Rem

The total unmitigated consequences are the sum of the consequences from sludge and DST releases. The results are:

C_{total} = C_{sludge} + C_{DST}

Onsite C_{total} = 1.21 Rem + 0.13 Rem = 1.34 Rem

Offsite C_{total} = 2.16E-03 Rem + 8.8E-05 Rem = 2.25E-03 Rem

As discussed above, the mitigated consequences are the same as the unmitigated consequences.

Key Parameters and Assumptions--Unmitigated Accident Analysis

Assumptions made in the unmitigated accident analysis are summarized below:

- No credit was taken for administrative controls, operating procedures, and personnel training.
- It was assumed that there are no monitoring systems for parameters such as tank dome pressure, liquid level, fan operability, and valve position.
- No credit was taken for the capability of the HVAC system to balance air flow and maintain negative air pressure in the tank with respect to the environment.
- The probability of HEPA filter blowout was estimated based on engineering judgement. For conservatism, it was assumed that if the pressure in the HVAC system exceed the HEPA filter failure threshold, both HEPA filters in series in the HVAC system would fail. Thus, no credit was taken in the unmitigated accident analysis for HEPA filtration of the released aerosols.
- It was assumed that all of the ventilation flowpaths between the AW tanks (common exhaust header) are closed and all pressure generated in Tank AW-105 would be directed towards the exhaust filtration system.

Key Parameters and Assumptions--Mitigated Accident Analysis

Several assumptions were made in the mitigated accident analysis to quantify the accident frequencies, hence, to validate these assumptions, controls are necessary to ensure that these assumptions are true and applicable during the transferring process. These are:

- K Basin sludge must be sampled to evaluate waste compatibility in a general sense (i.e., examine bulk sludge data relative to tank farm waste acceptance criteria). The sludge must be characterized to determine if there are chemicals in the sludge that are incompatible with the waste in Tank AW-105. This is necessary to guarantee that mixing will not result in runaway chemical reactions. Other bulk sludge characteristics that may have an effect on its acceptability at tank farms include pH, corrosivity (nitrate, nitrite, and hydroxide ion concentrations), fissile content, Cs-137 and Sr-90 concentrations, specific gravity, and pyrophoric material content. All of these parameters will require validation prior to acceptance of the material at tank farms.

- Following validation and acceptance of the bulk sludge characteristics, each shipment was assumed to be sampled to verify the sludge characteristics of each individual shipment are within tank farm acceptance requirements. Procedures describing the conduct of these sampling activities will need to be prepared. In this manner, tank farms will have given general approval to start shipping based on the bulk sludge characteristics and will also be able to verify that the contents of each shipment are within limits.

- Additional assumptions were made that additional pressure introduced to the tank from the transfer pump and the amount of sludge entering Tank AW-105 must be controlled to ensure tank dome pressures remain within the design limits. Because this analysis is based on the estimated compositions in K Basin sludge and the current contents of Tank AW-105, other additions to Tank AW-105 before and during K Basin sludge transferring process may impact these results. The compatibility of all materials being transferred to the tank must be examined and apprpriate chemical adjustments made to prevent such chemical reactions.

- Credit was not taken in the mitigated accident analysis for HEPA filtration.

- It was assumed that operators are trained and operating procedures are in effect that describe appropriate HVAC system operating procedures, testing and maintenance programs, and responses to alarms and faults that may occur.

7.2.5.4 Comparison with Guidelines

Based on the results presented above, the umitigated and mitigated onsite radiological doses are above the risk evaluation guidelines for Anticipated scenarios (0.5 Rem) and below the guidelines for Unlikely scenarios (5 Rem). The offsite consequences are below guidelines for both Anticipated and Unlikely events. Hazardous chemical exposures, including exposures to toxic and corrosive/irritant materials, are below both onsite and offsite guidelines.

7.2.5.5 Summary of Safety-Class SSCs and TSR Controls

Safety SSCs

The designation of safety SSCs related to failures of the HVAC system in a DST that contains commingled DST wastes and K Basin sludge would not be different than the safety classifications for DST wastes without K Basin sludge because the risk guideline comparisons in the safety assessment were consistent with those in the TWRS BIO (i.e., unmitigated doses above onsite and below offsite guidelines and mitigated doses below guidelines). No credit was taken in the accident analysis for

successful functioning of tank structures and systems (i.e., HVAC system, HEPA filters, air balance, etc.). Credit was taken for a release-limiting parameter and that is the 6 m^3 per shipment capacity of the Sludge Transportation System. This assumption would need to be factored into the limits established in the Sludge Transportation System SARP but would not translate into SSC analysis or TSR's for tank farms. Consequently, there are no safety class SSCs associated with this accident scenario.

TSR Controls

The following items were determined to be candidates for TSR controls. Final TSRs will be prepared following completion of the Sludge Transportation System and Sludge Transfer Station design activities. Two mitigative measures were credited in the accident analysis, as described below:

- K Basin sludge characterization and waste compatibility evaluations were assumed to correctly identify the quantities of chemicals added to the sludge to adjust the pH to tank waste conditions.

- Credit was taken in the mitigated accident analysis for proper adjustment of the pH of K Basin sludge to tank waste pH conditions prior to transferring the sludge into the tank. This would be a safety significant control as only the onsite risk guidelines were exceeded by this scenario.

7.2.6 Flammable Gas Deflagration

This scenario considers a flammable-gas release followed by exposure to a source of ignition resulting in a deflagration event. Offloading and storing K Basin sludge in tank AW-105 is almost certain to increase flammable gas generation, such as H_2, and NH_3. Steady state and episodic releases of flammable gases or Gas Release Events (GREs), are evaluated here. The deflagration accident frequencies and consequences are analyzed and provided in the following sections.

7.2.6.1 Ignition Sources

The results of the analysis presented in the following sections indicate the ignition frequencies are approximately the same as those estimated by Powers and Sawtelle (1996). Addition of K Basin sludge could, however, increase the likelihood of flammable gas deflagration due to introducing an additional ignition source into the tank (i.e., potentially pyrophoric materials). Pyrophoric reaction phenomena are addressed in Section 7.2.7. In addition, the possibility that a flammable atmosphere exists in the tank headspace will increase as a result of K Basin sludge additions, given the observation in the laboratory that hydrogen gas was generated after canister sludge samples were aspirated. The effects of the addition of K Basin sludge on steady-state flammable gas generation and the time to reach 25% of the LFL of hydrogen gas was estimated in Appendix G. As shown, the steady-state flammable gas concentration after the sludge transfers was about 2.67% of the LFL. This can be compared to the calculated steady-state concentration in AW-105 as it currently exists or about 0.03% (Hodgson et al. 1996). Consequently, a higher steady-state flammable gas concentrations would be obtained after transfering the sludge into the tank; however, the steady-state concentration would still be well below the 25% LFL limit as long as the ventilation system is functioning properly. Comparison with other flammable gas calculation results in Hodgson et al. (1996), including surface

level rise and barometric pressure correlation methods, are not applicable as they are based on in-tank measurements which do not exist for commingled K Basin sludge and DST wastes. In addition, the calculations in Appendix G determined that the 25% LFL limit would never be reached if the HVAC system is functioning properly and it would take in excess of 4 days to reach this limit if the HVAC system fails.

In order for a gas deflagration to occur, concentrations of flammable gas in excess of the Lower Flammable Limit (LFL) and an ignition source must occur simultaneously. The purpose of this section is to identify and evaluate potential ignition sources. Almost all of the following discussions related to the ignition sources are taken from WHC-SD-WM-CN-041, Rev. 0. (Powers and Sawtelle 1996). In this document, two different types of ignition sources were analyzed; first, ignition sources that can exist undetected prior to a GRE, and second, ignition sources that come into existence after a GRE. The methodologies for calculating ignition source probabilities and/or frequencies described in this document are summarized below. In some cases, these methodologies were modified to incorporate the additional ignition sources that would occur during the K-Basin offloading and storage processes.

Method for Calculating Ignition Source Probabilities That Can Exist Undetected Prior to a GRE

For ignition sources that can exist undetected prior to a GRE, the deflagration rate is a GRE rate combined with the probability that the ignition source exists during that period of time [deflagration rate = GRE rate * probability an ignition source exists given the occurrence of a GRE].

The method for calculating the probability of ignition for each identified ignition source involves understanding how each piece of equipment could fail and produce an ignition source, or what phenomena could occur that would result in the production of an ignition source. Once the equipment failures or phenomena are postulated that could produce an ignition possibility, probabilities are calculated that represent these failures or phenomena.

Method for Calculating Ignition Source Rates That Comes into Existence after a GRE

For ignition sources that come into existence after a GRE occurs, the deflagration frequency is the product of the frequency at which an ignition source would exist and the probability that the tank headspace is in a hazardous condition (>25% LFL) [deflagration rate = ignition rate * probability that headspace is hazardous].

The method for calculating ignition source rates has the same basis as that described in the above section for calculating the ignition source probabilities. The ignition sources that come into existence after a GRE must be identified, the mechanisms of failure causing an ignition to exist must be understood, and the average rate that a potential ignition source can be capable of producing an ignition source (λ) is represented on a per year basis.

Ignition Source Probability Estimation

The ignition source probabilities and/or frequencies provided in this section were taken primarily from Powers and Sawtelle (1996). In some cases, modifications were made to incorporate the additional deflagration scenarios arising from offloading and storage of K Basin sludge in AW-

105. In this document, a probability of 1.0E-05 was assigned to each potential instrumentation spark source which was ranked as "low," "very low," or "none," by Powers and Sawtelle. This probability of 1.0E-05 is assumed to be on a per year basis so the constant component failure rate is 1.0E-05/year. This constant component failure rate is the rate that the instrumentation could fail in a way to produce a spark. Existing instrumentation and equipment that could create ignition sources for tank AW-105 during waste transfer and storage are as follows:

- Thermocouple style A
- FIC real type conductivity gauge
- Standard hydrogen monitoring system
- Video camera and lights
- Pump pit leak detector - conductivity
- Transfer pump (in pump pit)
- Welding or torch burning slag/hot metal
- Manual tape with portable conductivity meter
- Electrical equipment used outside tank
- Lightning strike
- Still camera and lights
- Waste or water addition
- Hot drilling chips
- Tank high-level detector
- Slurry distributor
- Primary tank active ventilation system
- Vehicle fuel fire
- Grinding causes sparks
- Brush fire
- Adjacent tank fire
- Seismic event
- Removing riser cover
- Installation of various equipment (e.g., thermocouple tree, miscellaneous waste temperature sensor, air lance, etc.)

The results of this assessment are summarized in Table 7.31.

Tank Instrumentation - Based on the above assumption, the following pieces of instrumentation and equipment were each assumed to have a bounding constant component failure rate leading to an ignition source of 1.0E-05/year:

- Thermocouple style A
- Standard hydrogen monitoring system.
- FIC real type conductivity gauge
- Manual tape with portable conductivity meter

Tank High-level Detector - There are two mechanisms by which a tank high-level detector can produce a spark. Either the waste level rises to the level of the detector and activates the detector causing a spark, or there is enough moisture in the air to activate the detector causing a spark.

An ignition source (spark) was assumed to occur if the waste level rises to the level of the detector. Current estimates are that a total about 360 m^3 (96,000 gal.) of sludge and basin water will be transported over a three-year shipping campaign. As designed, the maximum storage capacity of Tank AW-105 is 1.16 million gallons at a liquid level of 35 ft 2 in. Based on the January 7, 1996 FIC reading from PC-SACS, Tank AW-105 contains a total of 379,000 gallons of waste (Hodgson et al. 1996). The addition of K Basin sludge will increase the total waste volume in Tank AW-105 to an estimated 476,000 gallons, which represents about 173 inches of waste (assuming 2750 gallons per inch). This waste level is much lower than the high-level detector. The probability of the tank high-level detector producing an ignition source due to overfilling by K Basin sludge is thus very small; however, a mistransfer of waste that results in an unplanned rise in tank level may occur. A mistransfer may cause the waste level to reach the capacity limit, resulting in conductive liquid contacting the conductivity probes and creating a spark. The probability of a tank high-level detector

Table 7.31. Probabilities and Frequencies of Ignition Sources

Instrumentation/Equipment	Unmitigated Ignition Probability or Frequency	Mitigated Ignition Probability or Frequency
Thermocouple Style A	1.0E-05/yr	1.0E-05/yr
FIC real type conductivity gauge	1.0E-05/yr	1.0E-05/yr
Manual Tape with Portable Conductivity Meter	1.0E-05/yr	1.0E-05/yr
Standard Hydrogen Monitoring System	1.0E-05/yr	1.0E-05/yr
Tank High-level Detector	6.0E-03	6.0E-05
Video Camera and Lights	1.0	1.0E-05
Slurry distributor	1.0E-03	1.0E-05
Pump Pit Leak Detector - Conductivity	1.86E-02/yr	1.0E-05/yr
Primary Tank Active Ventilation System	5.26E-01/yr	3.0E-05/yr
Transfer Pump (In Pump Pit)	1.78E-02/yr	1.78E-05/yr
Vehicle Fuel Fire	1.55E-04/yr	1.55E-05/yr
Hot Drilling Chips	4.5E-01/yr	4.5E-03/yr
Welding or Torch Burning Slag/Hot Metal	7.5E-02	7.5E-05
Grinding Causes Sparks	2.5E-02	2.5E-04
Electrical Equipment Used Outside Tank	1.0	1.0E-03
Brush Fire	3.72E-03/yr	3.72E-04/yr
Lightning Strike	3.0E-03 /yr	3.0E-04/yr
Seismic Event	9.0E-04 /yr	9.0E-04 /yr
Still Camera and Lights	1.0	1.0E-05
Removing Riser Cover	1.0	1.0E-04
Waste or Water Addition	1.0	1.0E-04
Installation of Various Equipment	1.0	1.0E-03

producing an ignition source, due to mistransferring, was estimated to be 5.0E-03 (Powers and Sawtelle 1996).

If there is enough moisture in the air to activate the detector, it was assumed that sparking will occur. The probability of a spark due to moisture following a gas release event was estimated to be 1.0E-03 (Powers and Sawtelle 1996).

The total unmitigated probability of a spark related to tank high-level detector was estimated to be (5.0E-03) + (1.0E-03) = 6.0E-03. For the mitigated scenario, the total mitigated probability of a spark related to tank high-level detector was estimated to be 6.0E-05. This was calculated assuming human intervention could prevent moisture from contacting the high-level detectors. An estimated human error rate of 1E-02/demand was used to model the probability that operators would fail to shut off power to all high-level detectors in a tank containing flammable gas.

Video Camera and Lights - It is assumed cameras and lights are installed and used continuously. The video camera systems when energized were assigned an unmitigated probability of ignition of 1.0, given that a flammable atmosphere exists. The mitigated probability of ignition was assumed to be 1.0E-05 because credits were taken for the purge systems and explosion-proof lights on the camera.

Slurry Distributor - When water or sludge is moving through the slurry distributor, there is a potential for build up of electrostatic charge. The unmitigated probability of an ignition source was assumed to be 1.0E-03, and the mitigated probability of an ignition source was estimated to be (1.0E-03) * (1.0E-02 human error to attach bonding) = 1.0E-05.

Pump Pit Leak Detector - The pump pit leak detector is essentially the same type of circuit as the tank high-level detector. There are three proposed scenarios by which the pump pit leak detector could be activated: 1) rainfall/snow melt could activate the detector; 2) a leak in the pump pit through which the sludge will be transferred could activate the detector; and 3) moisture in the pit atmosphere could activate the detector.

In all three scenarios, it was assumed that the probability that the pump pit atmosphere is flammable given that the tank atmosphere is flammable has a probability of 1.0E-01. For the first scenario, it was assumed there are two days per year in which there is either sufficient rainfall or snow melt to leak into unsealed pump pits and cause a spark when conductive liquid connects the two probes of the pit leak detector. It was conservatively assumed that all pump pits will leak given enough moisture. Thus the fraction of a year that any pump pit leak detector would produce an ignition source is (2 days/yr) / (365 days) = 5.5E-03 per year. The ignition frequency of this scenario was estimated to be (5.5E-03/yr) * (1.0E-01) = 5.5E-04 per year.

For the second scenario, the ignition frequency calculation involves multiplying together the number of transfers per year, the duration of each transfer, the frequency of occurrence of a leak into the pump pit, and the probability of propagation into the tank. As mentioned in Section 7.2.3.1, the annual number of K-Basin sludge transfer was estimated to be 74 transfers per year. Assume the duration per each transfer is 8 hours. Leakage was assumed to occurs in the pump pit from a gasket or jumper at the conservative frequency of 3.0E-05/hr (Eide 1990, Page 13). The ignition frequency was estimated to be (74 transfers/yr) * (8 hrs/transfer) * (3.0E-05/hr) * (1.0E-01) = 1.78E-03/yr.

For the third scenario, the ignition probability was calculated involves multiplying the probability of increased moisture in the pump pit that causes a pump pit leak detector to spark by the probability of propagation into the tank. The probability of the pump pit leak detector creating a spark, due to increased moisture, was estimated to be 1.0E-04 (Powers and Sawtelle 1996, Page 31) or the ignition frequency can be rounded up to 1.0E-04 per year. The ignition frequency was estimated to be (1.0E-04/yr) * (1.0E-01 probability of propagation) = 1.0E-05 per year.

Based on the above, the total unmitigated ignition source frequency of the three scenarios was estimated to be (5.5E-05/yr) + (1.78E-03/yr) + (1.0E-05/yr) = 1.86E-03 per year. The total ignition source frequency without the probability of propagation of deflagration from the pump pit to the tank was estimated to be 1.86E-02 per year. For the mitigated scenario, the ignition frequency was estimated to be 1.0E-05 per year based on information provided in Powers and Sawtelle (1996, Rev. 0, Section 6.5).

Primary Tank Active Ventilation System - Active ventilation systems typically have components such as fan motors and blowers, motor operated dampers, pressure and flow instrumentation, pressure switches, heaters, and temperature sensors. All such active systems represent potential ignition sources.

Differential pressure gauges and switches are connected to the air stream via sensing lines. The pressure switches control 120 VAC circuits and are considered to have a high capability for ignition. These switches have a probability of producing an ignition source of 1.0. It is recognized that the ignition of flammable gases at the switches can't propagate back to the ventilation duct and then back to the tank unless the concentration of flammable gases is high enough, and may not be able to propagate through the sensing lines because of cooling effects of the walls of the small diameter tubing.

The motor on a motor operated damper uses a single phase 115 VAC motor. This motor has a probability of ignition 1.0 when operating. But this motor is outside the ventilation duct, and the question of the possibility of propagation of an ignited flammable gas mixture back into the ventilation duct and tank vapor space must be considered.

The blowers or fans are not made of non-sparking materials. All primary ventilation fans have some capability of being an ignition source from fan misalignment or overheating of bearings. The ignition source was assumed to be from fan blades contacting the fan housing due to an improperly balanced system that does not cause the fan to shutdown catastrophically. This failure rate was assumed to be 3.0E-05/hour (Eide 1990, Page 19, ventilator fans failure to run; assuming that this failure rate could represent fan imbalance). The frequency at which this system would generate an ignition source was estimated to be (3.0E-05/hr) * (8760 hrs/yr) = 2.63E-01 per year.

The temperature sensors are ranked "low" by Powers and Sawtelle (1996) as an ignition source so it was assigned a probability of 1.0E-05.

Based on the design for the heater elements of the primary ventilation system, the heater elements are ranked "medium to high" as an ignition source (Scaief 1996, Page 10). Since the fan and the heater elements are both ranked at least "medium," it is assumed that the heater elements have the same ignition frequency as the fan to produce an ignition which is 2.63E-01 per year.

The total unmitigated ignition frequency caused by ventilation equipment is estimated to be (2.63E-01/yr) + (2.63E-01/yr) = 5.26E-01 per year. From Powers and Sawtelle (1996, Rev. 0, Section 6.6), the total mitigated frequency was assumed to be (1.0E-05/yr) + (1.0E-05/yr) + (1.0E-05/yr) = 3.0E-05 per year.

Transfer pump - The motors on transfer pumps are three-phase induction type motors. When operating as designed, they cannot spark or generate high temperatures. It was assumed a transfer pump motor fails in such a way as to produce a spark at the frequency of 3.0E-05/hr (Eide 1990, Page 12, motor failing to run; assuming all the failures represented by this failure cause a spark). It was also assumed that the probability of propagation from the pump pit to the tank has a probability of 1.0E-01. The unmitigated ignition frequency was estimated to be (3.0E-05/hr) * (74 K-Basin sludge shipments/yr) * (8 hrs/ K-Basin sludge shipment) = 1.78E-02 per year. The mitigated frequency was estimated to be (1.78E-02/yr) * (1.0E-03 human error with independent verification to ensure the transfer pump is deenergized prior to K Basin sludge transfers) = 1.78E-05 per year.

Vehicle Fuel Fire - This scenario represents the ignition source associated with a vehicle driven in a tank farm which collides with a riser, ruptures the fuel tank, ignites the spilled fuel by the collision or hot engine parts, and spills the burning fuel down the riser.

In Powers and Sawtelle (1996), a frequency of one vehicle accident fuel tank rupture per year in all the tank farms was assumed. This frequency was put on a "per vehicle entry into the tank farm" basis by the estimated number of vehicle entries into a tank farm. It was assumed there were 520 DST farm entries per year. Thus the probability of a vehicle collision with a riser in a tank farm per vehicle entry resulting in rupturing the fuel tank was estimated to be (1 rupture/yr) * (1 yr / 520 DST farm vehicle entries) = 1.92E-03/DST farm vehicle entry. As mentioned before, the addition of 74 shipments (tank farm entries) of K-Basin sludge transferring process would be added. The frequency of a vehicle collision with a riser in AW Tank Farm for all entries is estimated to be (1.93E-03/vehicle entry) * {(74 K-Basin sludge transferring entries/yr) + (520 other activity DST farm entries / 6 DST farms)} = 3.1E-01 per year.

Other factors that must be factored into the calculation to represent this scenario are the probability of a riser breaking due to the vehicle collision, probability of fuel igniting by the collision or by the heat from the engine, and probability of burning fuel entering the tank riser. The following probability values were taken from Powers and Sawtelle (1996):

- a probability of 5.0E-01 was assigned for a riser breaking due to the vehicle collision
- a probability of 1.0E-02 was assigned for a fuel igniting by the collision or by the heat from the engine
- a probability of 1.0E-01 was assigned for a burning fuel entering the tank riser.

Therefore, the unmitigated ignition frequency regarding vehicle accidents is estimated to be (3.1E-01/yr) * (5.0E-01) * (1.0E-02) * (1.0E-01) = 1.55E-04 per year. For the mitigated frequency regarding vehicle accidents, credit was taken for controls on the design of the vehicle by mechanically protecting the fuel tank which reduces the ruptures by an assumed factor of 10. Hence, the mitigated frequency was estimated to be (1.55E-04/yr) * 1.0E-01 = 1.55E-05 per year.

Hot Drilling Chips - Tank farm operations occasionally require drilling on tank structures such as risers. In order for hot drilling chips to be an ignition source in a tank, the drilling must occur on or near an opening to the tank vapor space. The probability of any given drilling activity being performed on a riser (drilling into a riser cover while still bolted to the riser) was assumed to be 1.0E-01. For drilling which was near enough to a riser (but not directly on the riser cover) so that hot drilling chips could enter the riser if open, the probability that the riser is open was assumed to be 5.0E-01. Thus the probability of the two possible scenarios together for the drill chips entering a tank's vapor space was estimated to be 1.0E-01 + (1.0E-01 * 5.0E-01) = 1.5E-01. The unmitigated rate of ignition source generation related to drilling activities was calculated assuming 3 drilling activities per tank year. Thus, the rate was rounded up to 4.5E-01 per year (3 drilling activities/yr * 1.5E-01). The mitigated rate of ignition source related to drilling activities was calculated assuming 3 drilling activities per tank per year and controls on how and when drilling is performed to prevent drilling chips from entering the tank. The ignition source generation rate was rounded up to 4.5E-03 per year (3 drilling activities/yr * 1.5E-01 hot drilling chips in tank per drilling activity * 0.01 human error related to preventing drilling chips from entering the tank = 4.5E-03 per year).

Welding or Torch Burning Slag or Hot Metal - For welding or torch activities to produce burning slag or hot metal that contacts a flammable gas environment in a tank, the welding or torch activities must occur on or near an opening to the tank vapor space. The probability of any given welding or torch activity being performed on a riser (welding or torch activity on a riser cover while still bolted to the riser) was estimated to be less than drilling, so 5.0E-02 per welding or torch activity was assigned. If welding or torch activities were near enough to a riser (but not directly on the riser cover) so that burning slag or hot metal could enter the riser if open, the probability that the riser is open was assumed to be 5.0E-01. Thus the unmitigated probability of the two possible scenarios together for burning slag or hot metal entering a tank's vapor space was estimated to be 5.0E-02 + (5.0E-02 * 5.0E-01) = 7.5E-02. The mitigated probability was estimated to be (7.5E-02) * (1.0E-03 human error with independent verification) = 7.5E-05

Grinding - For grinding to be an ignition source in a tank, the grinding must occur on or near an opening to the tank vapor space. The probability of any given grinding activity being performed on a riser or near enough to a riser that grinding sparks could enter the riser if open was assumed to be 5.0E-02. If grinding was near enough to a riser so the grinding sparks could enter the riser if open, the probability that the riser is open was assumed to be 5.0E-01. Thus, the unmitigated probability for grinding sparks entering a tank's vapor space was estimated to be 5.0E-02 * 5.0E-01 = 2.5E-02. The mitigated probability for grinding sparks entering a tank's vapor was estimated to be (2.5E-02) * (1.0E-02 human error related to preventing grinding sparks from entering the tank) = 2.5E-04.

Electrical Equipment Used Outside a Tank - For electrical equipment that is used outside a tank to be an ignition source in a tank, it is recognized that flammable gases must exist outside the tank that can be ignited plus a high enough concentration of flammable gases is required for propagation of the ignited flammable gases back into the tank vapor space. It was assumed that the probability of propagation of deflagration from outside the tank into the tank vapor space has a probability of 1.0E-01. The unmitigated probability of electrical equipment used outside a tank being an ignition source was assumed to be 1.0. The mitigated probability, assuming reliable human actions are taken to prevent generation of an ignition source outside the tank (especially if one considers there is already a flammable gas watchlist tank, AW-101, in the same tank farm as the K Basin sludge receiver tank)

was assumed to be 1.0E-03, based on the human error probability, with independent verification, to follow the existing flammable gas controls in the tank farm.

Brush Fire - Two potential scenarios are examined here for a brush fire to cause an ignition source that could be propagated into a tank. First a range fire could start outside a tank farm and burning material could enter the tank farm and an opening to a tank. Second a vehicle could collect brush under the vehicle, be driven into a tank farm, be ignited by hot exhaust system or engine, and burning material could enter an opening to a tank.

For a range fire that starts outside a tank farm, based on information from the Hanford Fire Department, the frequency that the fire occurs in a 5,000-acre section that includes a tank farm was estimated to be 2.80E-03/yr. The probability that burning material would enter a tank when present in the tank farm was assumed to be 1.0E-01. In a controlled situation, it was assumed that brush is cleared from the inside of a tank farm; therefore, an additional factor of 1E-01 was applied to the unmitigated probability to estimate the effects of removing brush and combustible material from the tank farm. Based on the above, the unmitigated ignition frequency was estimated to be 2.80E-03/yr * 1.0E-01 = 2.80E-04/yr, and the mitigated ignition frequency was estimated to be 2.80E-03/yr * 1.0E-01 * 1.0E-01 = 2.80E-05/yr.

For a vehicle-started brush fire, the frequency of 1 vehicle brush fire per 9 years in all tank farms is put on a "per vehicle entry into a tank farm" basis by dividing by the estimated number of vehicle entries into a tank farm. The frequency was estimated to be (1 vehicle brush fire/9 years) * (1 yr/520 DST farm vehicle entries) * (161 AW tank farm entries for both K-Basin transfer and other activities/yr) = 3.44E-02 per year. The unmitigated frequency of a vehicle brush fire getting inside the tank was estimated to be (3.44E-02/yr) * (1.0E-01) = 3.44E-03 per year. For the mitigated frequency, checking under trucks for brush and removing it before entering the tank farm was credited, resulting in an estimated mitigated frequency of (3.44E-02/yr) * (1.0E-01) * (1.0E-01) = 3.44E-04/year.

For the brush fire scenario, the total unmitigated frequency was estimated to be (2.8E-04/yr) + (3.44E-03/yr) = 3.72E-03 per year, and the total mitigated frequency was estimated to be (2.8E-05/yr) + (3.44E-04/yr) = 3.72E-04 per year.

Lightning strike - Based on the number of times lightning struck the ground including the Hanford site over a five year period from January 1, 1991 to January 1, 1996 as documented by Global Atmospherics, Inc., a lightning strike frequency of 6.0E-02 strikes per square kilometer per year is used as the base lightning strike frequency for this calculation. A nominal sized tank farm is 5.0E-02 square kilometers. Thus the lightening strike frequency on a nominal tank farm is 3.0E-03 per year. It was conservatively estimated that the unmitigated frequency of sparks created by lightning strikes is 3.0E-03 per year. A probability of 1.0E-01 was taken for credit of lightening protection reduction, thus the mitigated frequency was estimated as (3.0E-03/yr) * (1.0E-01) = 3.0E-04 per year.

Seismic Event - It was assumed that a 0.2g earthquake will cause an ignition source within the tank dome space with a probability of 1.0 due to metal striking metal or electrical faults producing sparks. Based on the return rate for a 0.2g earthquake from a recent Hanford Site seismic hazard analysis report (WHC 1996e), the rate of a 0.2g earthquake at Hanford was rounded up to 9.0E-4/year. The rate of seismic events of 0.2g was assumed for both the unmitigated and mitigated ignition rate.

Still Camera and Lights - The unmitigated probability of ignition for still camera and lights was assumed to be 1.0 because these camera and lights were not designed to operate in a flammable gas environment and produce an electrical flash as part of operation. The mitigated probability of ignition was assumed to be 1.0E-05 because of design of the camera and lights to industrial standards for flammable gas environments.

Removing Riser Cover - The unmitigated probability of ignition from electrostatic sparks caused by removing riser covers was assumed to be 1.0, because there would be no provisions for bonding and grounding in an unmitigated situation and electrostatic sparks would be expected as part of operation. The mitigated probability of ignition was assumed to be 1.0E-02 because of human error in failing to apply the bonding and grounding provisions when a procedure says to use them. If human reliability related to bonding and grounding is brought to its best by superior procedures and independent verification, the mitigated probability of ignition with high human reliability was estimated to be 1.0E-4.

Waste or Water Addition - Since waste or water addition to a tank is a waste intrusive activity, the probability of waste or water addition producing an ignition source, due to electrostatic sparks, will be on a per waste or water addition activity basis. When air or water is moving through conduits there is a potential for build up of electrostatic charge. The unmitigated probability of waste flowing into a tank that produces an ignition source is essentially zero if the conductivity of the waste is greater than the conductivity of sea water. If the waste had a conductivity less than sea water, the mitigated probability of producing an ignition source for waste flow could be essentially zero if the conductivity is changed to be greater than sea water prior to the waste transfer. For flow into a tank, there may be possibilities to ground the water piping unless it is totally buried. If bonding is possible for water addition and if human reliability related to bonding and grounding is brought to its best by superior procedures and independent verification, the mitigated probability of ignition with high human reliability was estimated to be 1.0E-04.

Installation of Various Equipment into Waste - Since installation of equipment like thermocouple trees, instrumentation, etc., into a tank is a waste intrusive activity, the probability of installation of equipment into the waste producing an ignition source, due to electrostatic sparks or mechanical sparks, will be on per installation activity basis. The unmitigated probability that installation of equipment into waste in a tank produces an ignition source was assumed to be 1.0. The mitigated probability of producing an ignition source was estimated to be 1.0E-03, which credited human error with independent verification of bonding/grounding or extreme care in installation.

7.2.6.2 Flammable Gas Concentration Probability and GRE Frequency Estimation

The following sections describe the assumption and methodology that were used to estimate the probability that flammable gas concentration greater than 25% of the LFL exist in the tank dome and the GRE frequency.

Probability of Flammable Gas Concentration Exceeding 25% of LFL

Flammable gases are constantly generated by all of the radioactive wastes and K-Basin sludge. While a fraction of the gas is retained in the waste, a portion of this generated gas is continuously released at a very low rate. Gas releases are managed by diluting and removing the gases from the

tank dome space through active or passive ventilation to prevent a steady accumulation of gas to flammable concentrations. Concentrations are maintained as low as practical with the existing ventilation configuration. In addition, maintaining low concentrations in the vapor spaces reduces the severity of gas release events by providing relatively clean air in which to dilute the released gases.

Two probability values for the concentration of the release gases including gas releases from K-Basin sludge and water in the tank headspace were estimated using standardized methods and data (see Appendix G). Two steady-state cases were evaluated, one for the mitigated scenario and another one for the unmitigated scenario. In the mitigated scenario, the ventilation system of the tank was assumed to operate at its full capacity of 70 ft^3/min. In the unmitigated scenario, no credit was taken for the ventilation system and/or any procedures or qualified equipment.

In the unmitigated scenario, it was assumed that the ventilation system does not exist. The only release path to the atmosphere for the accumulated flammable gases in the headspace is the 0.45% natural breathing. Under these conditions, the estimated bounding flammable gas concentration would reach 1,278% LFL (See Appendix G). This concentration is well above the 25% LFL level. Hence, the probability of flammable gas concentration without active ventilation is assumed to be 1.

In the mitigated scenario with the ventilation system operating, the steady-state flammable gas concentration in the tank headspace was calculated to be 2.67% of the LFL, well below the 25% LFL limit. This result indicates that the ventilation system would be adequate to keep the tank headspace flammable gas concentration generated from the combined AW-105 and K Basin sludge wastes well below 25% of the LFL under steady-state conditions.

For the mitigated scenario, the ventilation system is credited with providing a flow rate in the headspace that maintains the steady-state flammable gas concentrations well below the lower flammability limit as discussed in the previous section. The probability of flammable gas concentration was estimated by multiplying the failure probability of the ventilation system by the failure probability of the recovery action within 4 days (see Appendix G). Thus, the probability of flammable gas concentration was estimated to be (9.28E-02 ventilation system unavailability) * (1.0E-02 failure to recovery ventilation system) = 9.28E-04. The ventilation system unavailability, or the instantaneous failure probability, was calculated in Appendix E.

Gas Release Events Frequency

Some portion of the gas is generated and retained within the AW-105 solids and K-Basin sludge. Retained gases can include fuel (e.g., hydrogen, ammonia, methane) and therefore a sudden or rapid release could result in flammable concentrations. The gases can be released from the waste and burn in the tank vapor spaces if ignited. Periodically, the waste may spontaneously release large volumes of trapped gas which can raise the gas concentrations in the vapor space to flammable levels in a very brief period of time. The K-Basin sludge transfer process may trigger an induced release of retained gas. There are three potentially significant contributions to the frequency of a flammable gas release event that may result in tank dome failure and/or HEPA filter damage and/or waste fire if ignited. These are the rollovers, or sudden buoyant displacement of trapped gases that have been observed to occur in some tanks (such as 101-SY); waste intrusive due to K Basin sludge offloading activities; and releases induced by seismic events. In this study, the frequency of flammable gas

releases induced by seismic events was considered as a "common cause" event (resulting in GRE and ignition sources at the same time), and was treated independently.

As described above, it is assumed that a 0.2g earthquake will cause an ignition source within the tank dome space with a probability of 1.0 due to metal striking metal or electrical faults producing sparks. It is also recognized that the seismic event, including after shocks, could result in the release of gases from a tank at the same time as the ignition source is produced or exists. Seismic event is treated as a common cause event and it is assumed the rate of seismic events of 0.2g is the rate of deflagration for both unmitigated and mitigated cases (Powers and Sawtelle 1996, Rev. 0). The frequency of a 0.2g earthquake at Hanford was rounded up to 9.0E-04/year.

K-Basin sludge and/or flush water addition to a tank is considered as a waste intrusive activity that may result in gas release. Based on the information provided in Powers and Sawtelle (1996), it was assumed that addition of K-Basin sludge will cause a GRE once every 100 transfers. Thus, the frequency of GRE due to sludge and/or water addition to Tank AW-105 is estimated at:

frequency (waste intrusive activity leading to GRE) = Number of transfers per year * 1/100 * P

= 74/yr * 1/100 * 1.0E-01

= 7.4E-02/yr

where P is the probability of the gas release which retains greater than the LFL and is exposed to the ignition source (sparks).

Based on the information provided in Powers and Sawtelle (1996), Rev. 0, the frequency of flammable gas releases due to rollovers was judged to be "Beyond Extremely Unlikely" and this frequency was bounded by the frequencies of seismic event and waste intrusive activity.

7.2.6.3 Deflagration Frequency Estimation

The deflagration frequencies were estimated by multiplying the ignition source probability and/or frequency by the corresponding probability that flammable gas exceeds 25% of the LFL and/or the GRE frequency. In some cases, the probability of ignition source propagation, based on the rationale and basis provided by Powers and Sawtelle (1996), were credited. The probabilities of failure to recover that were credited in the mitigated scenarios were also estimated using the rationale/basis provided by Powers and Sawtelle (1996). The values used in the calculations below were derived in Sections 7.2.6.1 and 7.2.6.2. The results of the calculations are summarized in Table 7.32.

Thermocouple Style A; FIC Real Type Conductivity Gauge; Manual Tape with Portable Conductivity Meter; and Standard Hydrogen Monitoring System - The unmitigated deflagration rate for each of these instrumentation and/or equipment was estimated to be (1.5E-05/yr) * (1.0 probability of flammable gas concentration greater than LFL) = 1.5E-05 per year. The mitigated deflagration rate was estimated to be (1.5E-05/yr) * (9.28E-04 probability of flammable concentration greater than LFL) = 1.39E-08 per year.

Table 7.32. Deflagration Rates Related to Various Ignition Sources

Instrumentation/Equipment	Unmitigated Frequency (per year)	Mitigated Frequency (per year)
Thermocouple Style A	1.5E-05	1.38E-08
FIC Real Type Conductivity Gauge	1.5E-05	1.38E-08
Manual Tape with Portable Conductivity Meter	1.5E-05	1.38E-08
Standard Hydrogen Monitoring System	1.5E-05	1.38E-08
Tank High-level Detector	4.44E-04	4.44E-06
Video Camera and Lights	7.4E-02	7.4E-07
Slurry Distributor	7.4E-05	7.4E-07
Pump Pit Leak Detector - Conductivity	1.86E-02	9.28E-09
Primary Tank Active Ventilation System	5.26E-03	2.78E-10
Transfer Pump (In Pump Pit)	1.78E-03	1.65E-10
Vehicle Fuel Fire	1.55E-04	1.44E-08
Hot Drilling Chips	4.5E-01	4.18E-06
Welding or Torch Burning Slag/Hot Metal	5.55E-03	5.55E-06
Grinding Causes Sparks	1.85E-03	1.85E-05
Electrical Equipment Used Outside Tank	7.4E-03	7.4E-06
Brush Fire	3.72E-03	3.45E-08
Lightning Strike	3.0E-03	2.78E-07
Seismic Event	9.0E-04	9.0E-04
Still Camera and Lights	7.4E-01	7.4E-06
Removing Riser Cover	7.4E-01	7.4E-07
Waste or Water Addition	5.0E-03	5.0E-09
Installation of Various Equipment	3.37E-03	3.37E-08
Adjacent Tank Fire	5.65E-02	4.16E-06

Tank High-level Detector - The unmitigated rate of deflagration for the tank high-level detector was estimated to be (7.4E-02 GRE/yr) * (6.0E-03 probability of ignition) = 4.44E-04 per year. The mitigated rate of deflagration was estimated to be (7.4E-02 GRE/yr) * (6.0E-05 probability of ignition) = 4.44E-06 per year.

Video Camera and Lights - The unmitigated rate of deflagration related to the video camera and lights was estimated to be (7.4E-02 GRE/yr) * (1.0 probability of ignition) = 7.4E-02 per year. The mitigated rate of deflagration was estimated to be (7.4E-02 GRE/yr) * (1.0E-05 probability of ignition) = 7.4E-07 per year.

Slurry Distributor - The unmitigated rate of deflagration for the slurry distributor was estimated to be (7.4E-02 GRE/yr) * (1.0E-03 probability of ignition) = 7.4E-05 per year. The mitigated rate of deflagration was estimated to be (7.4E-02 GRE/yr) * (1.0E-05 probability of ignition) = 7.4E-07 per year.

Pump Pit Leak Detector - The unmitigated rate of deflagration for the pump pit leak detector was estimated to be (1.86E-02/yr) * (1.0 probability of flammable gas concentration greater than LFL) = 1.86E-02 per year. The mitigated deflagration rate was estimated to be (1.0E-05/yr) * (9.28E-04 probability of flammable concentration greater than LFL) = 9.28E-09 per year.

Primary Tank Active Ventilation System - The unmitigated rate of deflagration related to the primary tank active ventilation system producing a spark was estimated to be (5.26E-01/yr) * (1.0 probability of flammable gas concentration greater than LFL) * (1.0E-02 propagation) = 5.26E-03 per year. The mitigated deflagration rate was estimated to be (3.0E-05/yr) * (9.28E-04 probability of flammable concentration greater than LFL) * (1.0E-02 propagation) = 2.78E-10 per year.

Transfer Pump - The unmitigated rate of deflagration related to the transfer pump motor producing a spark was estimated to be (1.78E-02/yr) * (1.0 probability of flammable gas concentration greater than LFL) * (1.0E-01 propagation) = 1.78E-03 per year. The mitigated deflagration rate was estimated to be (1.78E-05/yr) * (9.28E-04 probability of flammable concentration greater than LFL) * (1.0E-02 propagation) = 1.65E-10 per year.

Vehicle Fuel fire - The mitigated rate of deflagration related to a vehicle collision in a tank farm causing burning fuel to spill into a tank riser was estimated to be (1.55E-04/yr) * (1.0 probability of flammable gas concentration greater than LFL) = 1.55E-04 per year. The mitigated deflagration rate was estimated to be (1.55E-05/yr) * (9.28E-04 probability of flammable concentration greater than LFL) = 1.44E-08 per year.

Hot Drilling Chips - The unmitigated rate of deflagration related to drilling activities was estimated to be (4.5E-01/yr) * (1.0 probability of flammable gas concentration greater than LFL) = 4.5E-01 per year. The mitigated deflagration rate was estimated to be (4.5E-03/yr) * (9.28E-04 probability of flammable concentration greater than LFL) = 4.18E-06 per year.

Welding or Torch Burning Slag/Hot Metal - The unmitigated rate of deflagration related to welding or torch activities was estimated to be (7.4E-02 GRE/yr) * (7.5E-02 probability of ignition) = 5.55E-03 per year. The mitigated rate of deflagration was estimated to be (7.4E-02 GRE/yr) * (7.5E-05 probability of ignition) = 5.55E-06 per year.

Grinding Causes Sparks - The unmitigated rate of deflagration related to grinding activities was estimated to be (7.4E-02 GRE/yr) * (2.5E-02 probability of ignition) = 1.85E-03 per year. The mitigated rate of deflagration was estimated to be (7.4E-02 GRE/yr) * (2.5E-04 probability of ignition) = 1.85E-05 per year.

Electrical Equipment Used Outside Tank - The unmitigated rate of deflagration for electrical equipment that is used outside a tank was estimated to be (7.4E-02 GRE/yr) * (1.0 probability of ignition) * (1.0E-01 probability of propagation) = 7.4E-03 per year. The mitigated rate of deflagration was estimated to be (7.4E-02 GRE/yr) * (1.0E-03 probability of ignition) * (1.0E-01 probability of propagation) = 7.4E-06 per year.

Brush Fire - The unmitigated rate of deflagration related to brush fires was estimated to be (3.72E-03/yr) * (1.0 probability of flammable gas concentration greater than LFL) = 3.72E-03 per year. The mitigated deflagration rate was estimated to be (3.72E-04/yr) * (9.28E-04 probability of flammable concentration greater than LFL) * (1.0E-01 clearing brush from tank farm) = 3.45E-08 per year.

Lightning Strike - The unmitigated rate of deflagration related to lightning was estimated to be (3.0E-03/yr) * (1.0 probability of flammable gas concentration greater than LFL) = 3.0E-03 per year. The mitigated deflagration rate was estimated to be (3.0E-03/yr) * (9.28E-04 probability of flammable concentration greater than LFL) * (1.0E-01 lightning protection reduction) = 2.78E-07 per year.

Still Camera and Lights - The unmitigated rate of deflagration related to the intrusive activity of using a still camera and lights was estimated assuming 10 camera activities per tank per year to be (10 camera activities/tank) (7.4E-02 GRE/yr) * (1.0 probability of ignition) = 7.4E-01 per year. The mitigated rate of deflagration was estimated to be (10 camera activities/tank) * (7.4E-02 GRE/yr) * (1.0E-05 probability of ignition) = 7.4E-06 per year.

Removing Riser Cover - The mitigated rate of deflagration related to electrostatic sparks was estimated assuming 100 riser cover removals per tank per year to be (100 riser cover removals/yr) * (7.4E-02 GRE/yr) * (1.0 probability of ignition) = 7.4E-01 per year. The mitigated rate of deflagration was estimated to be (100 riser cover removals/yr) * (7.4E-02 GRE/yr) * (1.0E-04 probability of ignition) * (1.0E-03 human error in failing to apply bonding and grounding provisions with independent verification) = 7.4E-07 per year.

Waste or Water Addition - The unmitigated rate of deflagration related to the waste or water addition activities was estimated (74 waste or water addition activities/yr) * (8 hrs/activity) * (1 yr / 8760 hr) * (7.4E-02 GRE/yr) * (1.0 probability of ignition) = 5.0E-03 per year. The mitigated rate of deflagration was estimated to be (74 waste or water addition activities/yr) * (8 hrs/activity) * (1 yr / 8760 hr) * (7.4E-02 GRE/yr) * (1.0E-04 probability of ignition) * (1.0E-02 human error to bond/ground properly) = 5.0E-09 per year.

Installation of Various Equipment - The unmitigated rate of deflagration related to the equipment installation activity was estimated assuming 50 equipment installation activities per year to be (50 activities/yr) * (8 hrs/activity) * (1 yr / 8,760 hr) * (7.4E-02 GRE/yr) * (1.0 probability of ignition) = 3.37E-03 per year. The mitigated rate of deflagration was estimated to be (50 activities/yr) * (8

hrs/activity) * (1 yr / 8,760 hr) * (7.4E-02 GRE/yr) * (1.0E-03 probability of ignition) * (1.0E-02 human error to bond/ground properly) = 3.37E-08 per year.

Adjacent Tank Fire - The unmitigated rate of deflagration for adjacent tank fire was estimated by summing the deflagration rates for all the ignition sources listed below and then reducing the rate by a factor of ten to account for an assumed probability of propagation from one tank to another.

- Thermocouple style A
- FIC real type conductivity gauge
- manual tape with portable conductivity meter
- standard hydrogen monitoring system, tank high-level detector
- video camera and lights
- slurry distributor
- pump pit leak detector
- primary tank active ventilation system
- transfer pump
- vehicle fuel fire
- hot drilling chips
- welding or torch burning slag/hot metal
- grinding
- electrical equipment used outside tank

7.2.6.4 Accident Scenario Development

As described in the draft TWRS BIO (LMHC 1997), the gas volume introduced by the gas release event may be enough to make a portion or all of the headspace flammable, i.e., above the lower flammable limit. If the release occurs over a small area of the waste surface, i.e., a local release, only a portion of the headspace may be flammable. This is a transient condition and because of diffusion, convection, and the ventilation, flammable concentrations will be short lived. As discussed above, ignition sources can be found either inside or outside the tank. Hence, the accident scenarios that were developed depend upon the gas characteristics and the location of ignition sources. The combinations of these events (i.e., [1] flammable gas concentration exceeds LFL and the frequency of ignition, and [2] GRE frequency with probability of ignition) will result in the deflagration scenario. An event tree was developed to identify the accident sequences and to provide the mathematical framework for the estimation of accident frequencies. The computer code IRRAS 5.50 (Russel et al. 1992) was used for model development and a computer spreadsheet (Microsoft EXCEL) was used for the quantification.

The event tree shown in Figure 7.8 starts with the initiating event named "DEFLA" which represents all deflagration events discussed in the previous sections. It was conservatively assumed that the HEPA filter will fail (rupture) or be bypassed due to overpressure given that flammable gas initiation occurs. The top event named "FILTERDA" is placed in the event tree to represent the conditional probability of HEPA filter blowout. Other failures, such as tank dome failure and waste fire, are also addressed in the event tree model. Top event named "DOMECOLL" represents the condition of dome failure and top event named "WASTEIGN" represents the condition in which the

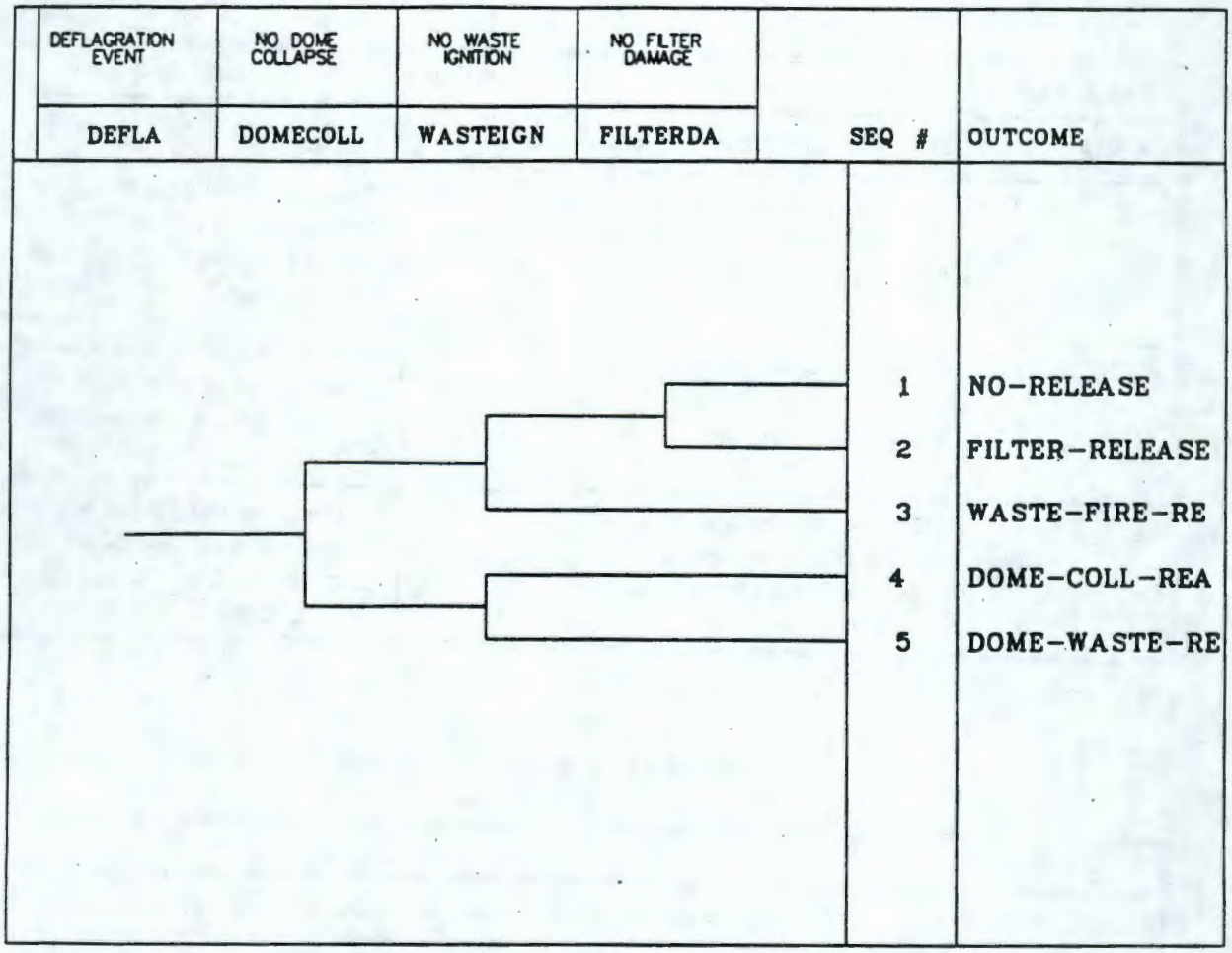

Figure 7.8. Event Tree for Flammable Gas Deflagration

flammable gas deflagration creates a fire involving the solids in the waste tank. Table 7.33 provides the probability values related to the top events and the associated basis/rationale.

The event tree outcomes depend upon the location of the failures. Based on the event tree model, four accident end-states were identified. The consequences range from filter-release to dome failure and waste fire. Table 7.34 provides the descriptions of the accident end-states in detail.

Two accident scenarios were considered for deflagration events, unmitigated accident scenario and mitigated accident scenario. The accident scenarios with controls are the same as the accident scenarios without controls. However, the probabilities of occurrence are reduced through the implementation of the controls. Only the initiating event in the event tree model is affected by the controls.

Table 7.33. Top Event Descriptions and Probabilities

Event Name	Event Description	Probability	Basis/Rationale
DEFLA	Deflagration Initiating Event	See Table 7.32	
DOMECOLL	No dome collapse from fire - A significant portion of the tank dome fails structurally.	9.0E-01	Engineering Judgement - It was assumed that 9 out of 10 deflagration events cause tank dome rupture.
WASTEIGN	No waste ignition - The dome space fire results in waste combustion	1.0E-01	From WHC-SD-WM-SAD-036, requires high temperature for extended time and close contact with waste.
FILTERDA	Filter intact - Exhauster HEPA filters are not damaged by the fires.	1.0	Engineering Judgement - It was conservatively assumed all deflagration events cause HEPA filter damage.

Table 7.34. Outcome Descriptions

Outcome	Description
NO-RELEASE	Aboveground fires do not cause any radioactive or toxic material release.
FILTER-RELEASE	Burning results in release of the exhauster HEPA material burden.
WASTE-FIRE-RE	Waste radioactive and toxic combustion products release.
DOME-COLL-REA	Tank dome deflagration-induced collapse results in an aerosol and toxic-gas release.
DOME-WASTE-RE	Initial tank dome deflagration-induced collapse aerosol release followed by waste radioactive and toxic combustion products release.

Unmitigated Accident Frequency

In the unmitigated accident scenario, no credit was taken for ignition source controls, physical barriers, qualified equipment, or administrative controls. The initiator "DEFLA" was substituted by the unmitigated deflagration frequencies provided in Table 7.32. Each accident outcome was estimated by multiplying the unmitigated deflagration frequencies by the probability values of the top events. As mentioned above, it was conservatively assumed that the HEPA filter will fail given the deflagration event occurs. Hence, the frequency of filter-release end state is represented by the total deflagration frequency.

Table 7.35 provides the unmitigated accident frequencies for various ignition sources. The first column in this table identifies the potential ignition sources. The second column within the table provides the unmitigated deflagration frequencies related to the particular ignition sources. The third column provides the accident frequencies associated with filter-release outcome. The fourth column provides the accident frequencies associated with waste-fire outcome. The fifth column provides the accident frequencies associated with tank dome collapse outcome. And the last column in the table provides the accident frequencies associated with dome collapse with waste-fire outcome.

Mitigated Accident Frequency

The mitigated accident frequency estimations for the deflagration events with controls are the same as the estimations for unmitigated accident frequencies, however, SSCs and TSR are credited with reducing the frequency of the initiating event. The frequency and/or probability reductions related to the ignition sources, GRE, and flammable gas concentration were discussed in the previous sections. The mitigated accident frequencies are provided in Table 7.36. The total accident frequency for each individual outcome is provided in the last row of this table and that for the filter-release outcome was estimated to be 5.43E-05 per year. The total accident frequency for the waste fire release outcome was estimated to be 5.43E-07 per year and the frequency for the dome failure outcome was estimated to be 4.40E-05 per year. The frequency of dome collapse with waste fire was estimated to be 4.89E-06 per year.

Common Cause Frequency

As discussed previously, a seismic event is considered as the common cause event which would cause an ignition source within the tank dome space with a probability of 1.0 and could result in the release of gases from Tank AW-105 at the same time; because of this reason, seismic event is treated separately. The event tree shown in Figure 7.5 was used to estimate the accident frequencies related to seismic event. In this study a frequency of 9.0E-04/yr was assigned for a 0.2g earthquake (it is assumed that a 0.2g earthquake will cause the deflagration event), and the accident frequencies were found as:

Accident frequency regarding Filter release outcome	= 9.0E-04 per year
Accident frequency regarding waste fire outcome	= 9.0E-06 per year
Accident frequency regarding dome collapse outcome	= 7.29E-04 per year
Accident frequency regarding dome collapse with waste fire outcome	= 8.1E-05 per year.

As can be seen, the frequencies associate with HEPA filter failures and subsequent mechanical releases are in the Unlikely frequency category. Sequences leading to tank dome failure with or without waste fires are in the Extremely Unlikely frequency category. These frequencies are applied for both unmitigated and mitigated scenarios.

7.2.6.5 Source Term Analysis

Releases of tank waste from flammable gas deflagrations have been studied extensively in support of the TWRS BIO, including a Justification for Continued Operation (JCO; Grigsby and Leach 1996) that addressed the hazards and proposed controls associated with flammable gas and slurry growth in Hanford's tank farm facilities. The TWRS BIO concludes that the risks of

Table 7.35. Unmitigated Accident Frequencies

Instrumentation/Equipment	Unmitigated Deflagration Frequency (per year)	Sequence #2 FILTER-RELEASE Accident Frequency (per year)	Sequence #3 WASTE-FIRE-RE Accident Frequency (per year)	Sequence #4 DOME-COLL-REA Accident Frequency (per year)	Sequence #5 DOME-WASTE-RE Accident Frequency (per year)
Thermocouple Style A	1.50E-05	1.50E-05	1.50E-07	1.22E-05	1.35E-06
ENRAF Level Gauge	1.50E-05	1.50E-05	1.50E-07	1.22E-05	1.35E-06
FIC Real Type Conductivity Gauge	1.50E-05	1.50E-05	1.50E-07	1.22E-05	1.35E-06
Manual Tape with Portable Conduc. Meter	1.50E-05	1.50E-05	1.50E-07	1.22E-05	1.35E-06
Standard Hydrogen Monitoring System	1.50E-05	1.50E-05	1.50E-07	1.22E-05	1.35E-06
Tank High Level Detector	4.44E-04	4.44E-04	4.44E-06	3.60E-04	4.00E-05
Video Camera and Lights	7.40E-02	7.40E-02	7.40E-04	5.99E-02	6.66E-03
Slurry Distributor	7.40E-05	7.40E-05	7.40E-07	5.99E-05	6.66E-06
Pump Pit Leak Detector - Conductivity	1.86E-02	1.86E-02	1.86E-04	1.51E-02	1.67E-03
Primary Tank Active Ventilation System	5.26E-03	5.26E-03	5.26E-05	4.26E-03	4.73E-04
Transfer Pump (In Pump Pit)	1.78E-03	1.78E-03	1.78E-05	1.44E-03	1.60E-04
Vehicle Fuel Fire	1.55E-04	1.55E-04	1.55E-06	1.26E-04	1.40E-05
Hot Drilling Chips	4.50E-01	4.50E-01	4.50E-03	3.65E-01	4.05E-02
Welding or Torch Burning Slag/Hot Metal	5.55E-03	5.55E-03	5.55E-05	4.50E-03	5.00E-04
Grinding Causes Sparks	1.85E-03	1.85E-03	1.85E-05	1.50E-03	1.67E-04
Electrical Equipment Used Outside Tank	7.40E-03	7.40E-03	7.40E-05	5.99E-03	6.66E-04
Brush Fire	3.72E-03	3.72E-03	3.72E-05	3.01E-03	3.35E-04
Lightning Strike	3.00E-03	3.00E-03	3.00E-05	2.43E-03	2.70E-04
Still Camera and Lights	7.40E-01	7.40E-01	7.40E-03	5.99E-01	6.66E-02
Removing Riser Cover	7.40E-01	7.40E-01	7.40E-03	5.99E-01	6.66E-02
Waste or Water Addition	5.00E-03	5.00E-03	5.00E-05	4.05E-03	4.50E-04
Installation of Various Equipment	3.37E-03	3.37E-03	3.37E-05	2.73E-03	3.03E-04
Adjacent Tank Fire	5.65E-02	5.65E-02	5.65E-04	4.58E-02	5.09E-03

Table 7.36. Mitigated Accident Frequencies

Instrumentation/Equipment	Mitigated Deflagration Frequency (per year)	Sequence #2 FILTER-RELEASE Accident Frequency (per year)	Sequence #3 WASTE-FIRE-RE Accident Frequency (per year)	Sequence #4 DOME-COLL-REA Accident Frequency (per year)	Sequence #5 DOME-WASTE-RE Accident Frequency (per year)
Thermocouple Style A	1.38E-08	1.38E-08	1.38E-10	1.12E-08	1.24E-09
ENRAF Level Gauge	1.38E-08	1.38E-08	1.38E-10	1.12E-08	1.24E-09
FIC Real Type Conductivity Gauge	1.38E-08	1.38E-08	1.38E-10	1.12E-08	1.24E-09
Manual Tape with Portable Conduc. Meter	1.38E-08	1.38E-08	1.38E-10	1.12E-08	1.24E-09
Standard Hydrogen Monitoring System	1.38E-08	1.38E-08	1.38E-10	1.12E-08	1.24E-09
Tank High-Level Detector	4.44E-06	4.44E-06	4.44E-08	3.60E-06	4.00E-07
Video Camera and Lights	7.40E-07	7.40E-07	7.40E-09	5.99E-07	6.66E-08
Slurry Distributor	7.40E-07	7.40E-07	7.40E-09	5.99E-07	6.66E-08
Pump Pit Leak Detector - Conductivity	9.28E-09	9.28E-09	9.28E-11	7.52E-09	8.35E-10
Primary Tank Active Ventilation System	2.78E-10	2.78E-10	2.78E-12	2.25E-10	2.50E-11
Transfer Pump (In Pump Pit)	1.65E-10	1.65E-10	1.65E-12	1.34E-10	1.49E-11
Vehicle Fuel Fire	1.44E-08	1.44E-08	1.44E-10	1.17E-08	1.30E-09
Hot Drilling Chips	4.18E-06	4.18E-06	4.18E-08	3.39E-06	3.76E-07
Welding or Torch Burning Slag/Hot Metal	5.55E-06	5.55E-06	5.55E-08	4.50E-06	5.00E-07
Grinding Causes Sparks	1.85E-05	1.85E-05	1.85E-07	1.50E-05	1.67E-06
Electrical Equipment Used Outside Tank	7.40E-06	7.40E-06	7.40E-08	5.99E-06	6.66E-07
Brush Fire	3.45E-08	3.45E-08	3.45E-10	2.79E-08	3.11E-09
Lightning Strike	2.78E-07	2.78E-07	2.78E-09	2.25E-07	2.50E-08
Still Camera and Lights	7.40E-06	7.40E-06	7.40E-08	5.99E-06	6.66E-07
Removing Riser Cover	7.40E-07	7.40E-07	7.40E-09	5.99E-07	6.66E-08
Waste or Water Addition	5.00E-09	5.00E-09	5.00E-11	4.05E-09	4.50E-10
Installation of Various Equipment	3.37E-08	3.37E-08	3.37E-10	2.73E-08	3.03E-09
Adjacent Tank Fire	4.16E-06	4.16E-06	4.16E-08	3.37E-06	3.74E-07
Total	5.43E-05	5.43E-05	5.43E-07	4.40E-05	4.89E-06

flammable gas deflagrations are, "significantly above guidelines with existing and available controls." The JCO concludes that passive or active ventilation is required to control risks associated with steady state gas generation and the risks of retained gases would be managed by controlling ignitions sources and continuous monitoring. This was interpreted here as an indication that the consequences of a flammable gas deflagration event are unacceptable so efforts to control flammable gas accident risks are focused on preventing accumulation of flammable atmospheres and on controlling the frequencies of ignition sources. Even though addition of K Basin sludge may increase the risks of flammable gas deflagration in AW-105, the radioactive and hazardous chemical releases to the environment and

subsequent MEI exposures are already unacceptable. Therefore, a source term analysis is not necessary for this assessment. However, an approximate source term, based on information in the TWRS BIO and supporting calculation note (WHC 1996f), was developed for comparison purposes.

There are two components of the release from a gas deflagration; 1) material located in the ventilation system at the time deflagration occurs, and 2) aerosols generated from the tank surface by the deflagration energy (i.e., entrained material).

Ventilation system material was assumed to be equivalent to 0.001 L of sludge liquids, based on a similar assumption made in WHC (1996f) regarding DST liquid equivalence.

Aerosols generated from the tank waste were estimated under the assumption that a layer of K Basin sludge rests on top of other waste in AW-105 and is the only material entrained when the deflagration occurs. This implies that the K Basin sludge layer in the tank would shield the wastes located in layers below the sludge from the effects of the deflagration. For this configuration, there are two components to the release of entrained material; 1) material in the tank vapor space that would be swept out of the tank by the deflagration event, and 2) material entrained from the waste surface by the flame front. The unmitigated release quantities from these two release components for DSTs given in WHC (1996f) were 2.76 L for a deflagration event only and 7.74 L of DST solids for a pump ejection event.

Mitigated source terms were not calculated for this accident scenario as no mechanisms or controls are currently available to mitigate the consequences of a flammable gas deflagration. Therefore, the source term from the mitigated accident scenario is the same as the unmitigated source term.

7.2.6.6 Consequence Analysis

A slightly different consequence analysis methodology was used to calculate the doses from the flammable gas deflagration event involving K Basin sludge. The methodology is the same as that used in the BIO for inhalation dose calculations; i.e., use of ULDs rather than sludge unit doses presented in Table 7.9. This is because the material released from this event includes only material at or near the top of the waste surface, or liquid layer, in the tank. Therefore, only material with radionuclide and toxic chemical composition of K Basin sludge liquids (i.e., K Basin water) would be released. The ULD given in Section 7.1 for K Basin sludge liquids was 1.63E+05 Rem/L. The doses to onsite and offsite MEIs were then calculated using the following general formula:

$$\text{Dose} = \text{ST} * \text{ULD} * \text{BR} * \text{X/Q}$$

Substituting the appropriate release quantity and onsite receptor values into this formula results in the following:

Deflagration

$$\text{Onsite Dose} = (2.76\ \text{L})\ (1.63\text{E}+05\ \text{Rem/L})\ (3.3\text{E-}04\ \text{m}^3/\text{sec})\ (0.034\ \text{sec/m}^3)$$
$$= 5.1\ \text{Rem}$$

Offsite Dose = (2.76 L) (1.63E+05 Rem/L) (2.7E-04 m^3/sec) (2.8E-05 sec/m^3)
= 3.4E-03 Rem

Pump Ejection

Onsite Dose = (7.74 L) (1.63E+05 Rem/L) (3.3E-04 m^3/sec) (0.034 sec/m^3)
= 14.2 Rem

Offsite Dose = (7.74 L) (1.63E+05 Rem/L) (2.7E-04 m^3/sec) (2.8E-05 sec/m^3)
= 9.5E-03 Rem

The pump ejection mechanism results in higher consequences so it will be used for the rest of this analysis. In addition, the consequences of release of ventilation system material is negligible compared to the pump ejection mechanism. Therefore, the total unmitigated radiological consequences are 14.2 Rem to the onsite MEI and 0.0095 Rem to the offsite MEI. These are also the mitigated consequences. These mitigated scenario consequences exceed onsite guidelines for all three frequency categories so as long as the mitigated scenario is judged to be credible, and it is in the TWRS BIO, this event will exceed onsite risk guidelines. The offsite consequences of the mitigated and unmitigated scenarios are substantially below the risk guidelines.

Hazardous chemical release rates used to compare against the guidelines were estimated by dividing the release quantity by the approximate release duration. In the TWRS BIO, the release duration from flammable gas deflagration was given as 200 sec. Based on this duration, the release rate would be 3.87E-02 L/sec (7.74 L ÷ 200 sec). Both the release rate and release quantity exceed the onsite exposure guidelines for toxics and corrosives/irritants. The release rate and release quantity are both below the offsite exposure guidelines for toxics and corrosives/irritants.

7.2.6.7 Summary of Safety-Class SSCs and TSR Controls

The safety-class and safety-significant SSCs and the TSRs selected to reduce the frequency of a flammable gas burn are described in detail in the TWRS BIO (LMHC 1997) and flammable gas JCO (Grigsby and Leach 1996). The safety SSCs and proposed TSRs include the necessary and prudent controls required for (1) the specific accident analyzed, (2) burns in other enclosures along waste transfer routes, and (3) other identified hazardous conditions that are represented by the analyzed accident. The designation of safety SSCs and TSR controls related to flammable gases and ignition sources are summarized below.

Safety SSCs

To prevent the build-up of flammable gas releases and to minimize the time at risk during a gas release event, the ventilation system on tanks must be operable and operating. The ventilation systems on Tank AW-105 are designated as safety class (SC).

The annulus leak detection system is designated as safety class. This will ensure that the system is available to detect and alarm the presence of waste in the annuli of Tank AW-105.

TSR Controls

The proposed TSR controls for the prevention or mitigation of deflagrations in Tank AW-105 are primarily those required to ensure the operability of the SC and SS features, i.e.,:

- Primary tank ventilation systems
- The annulus leak detection system
- Prevent ignition sources
- Maintain permanent gas monitors on tank
- Ensure that waste transfers don't create a flammable gas deflagration hazard outside the safety envelope
- Ensure that the Tank Waste Remediation System Emergency Preparedness Program includes specific emergency plans and procedures addressing required actions for possible flammable gas fires and explosions.

The following criteria are used for all equipment that is installed or used during work activities for that portion of the equipment that can contact the undiluted gases and is applied to vapor space locations when a GRE is postulated to create flammable conditions.

1. Mechanical tooling, equipment and materials shall be constructed of spark-resistant material, or shall be rendered incapable of sparking, or shall have been analyzed and evaluated to not be capable of sparking under the applied conditions. Material compatibility shall be evaluated for thermite reaction potential.

2. Electrostatic ignition sources shall be controlled by providing bonding or grounding according to NFPA 77.

3. Exposed polymer materials shall be rendered incapable of electrostatic charge or discharge potential either by design or through acceptable work around practices.

4. The surface temperatures of heat-generating devices shall not exceed 80% of the autoignition temperature of the flammable gas or a maximum of 160 ^{0}C (320 ^{0}F) if the device can contact the waste and cause ignition by triggering exothermic reactions in the waste. Internal temperatures of heat generating devices may exceed 80% of the autoignition temperature if the heat source is either isolated from the gas environment, or if the design of the device enclosure meets the requirements for explosion-proof housings.

5. Electrical equipment shall be designed to meet NFPA 70, Class 1, Division 1, Group B criteria to the maximum extent practical for those equipment that can contact the undiluted gases. Electrical equipment shall be designed to meet NFPA 70, Class I, Division 2, Group B criteria to the maximum extent practical for those equipment in the vapor space locations when a GRE is postulated to create flammable conditions.

6. For those equipment that can contact the undiluted gases, shutdown of purged and pressurized electrical equipment and purged and pressurized heat-generating equipment, upon loss of protective gas pressure or flow, shall be automatic by design as defined by NFPA 496 (1993) Type X pressurization. For those in the vapor space locations, either automatic shutdown or alarming with manual shutdown will be required upon loss of protective gas pressure or flow as defined by NFPA 496 (1993) Type Z pressurization.

7. For equipment that can contact the undiluted gases, interlocked start-up of purged and pressurized electrical or purged and pressurized heat-generating equipment shall only be allowed upon system sensing of pre-set safety limits. If pressurized enclosures are used to isolate energized components, a minimum of four enclosure volumes shall be purged through the enclosure for energized components, and/or 10 volume shall be purged for enclosed motors prior to controlled start-up of the system components (NFPA 70 1996), (NFPA 496 1993). For those in the vapor space locations, automatic or manual start-up of purged and pressurized electrical or purged and pressurized heat-generating equipment shall only be allowed upon system sensing of pre-set safety limits. If pressurized enclosures are utilized to isolate energized components, a minimum of four enclosure volumes shall be purged through the enclosure for energized components, or 10 volumes shall be purged for enclosed motors prior to controlled start-up of the system components (NFPA 70 1993, NFPA 496 1993). When combustible gas detection shut down systems are employed, start-up of equipment shall only be allowed once measured acceptable flammable gas levels are indicated.

7.2.7 Uranium Metal Pyrophoricity

The analysis investigated the pyrophoricity of the N Reactor fuel in K Basin including Zr and U metals as accident initiators. Based on the characteristics of the metals, current and proposed handling conditions, and the conditions necessary to support spontaneous ignition, Zr was not evaluated further. Uranium metal is pyrophoric and can react violently under certain chemical states of the metal (e.g., unreacted metal, oxide or hydride) and environmental conditions (e.g., external heat, dry air, ignition source).

This analysis evaluates the potential for a U metal fire during transfer and storage of K Basin sludge in AW-105 and the consequences associated with the fire involving in-tank flammable gas and organic solvents due to the spontaneous ignition of U metals in the sludge.

7.2.7.1 Background

Although gas bubbles have been observed to emanate from the K Basin sludge, current operations at K Basin indicate that there are no flammability issues associated with underwater storage of the K Basin sludge. Prior to transferring the K Basin sludge to Tank AW-105, two operations or processes (in addition to the transport of the sludge from K Basin to the AW Tank Farm) are performed at K Basin that can potentially impact the pyrophoricity of the U Metal in the sludge. These operations include sludge retrieval from the basin and chemical adjustment with sodium hydroxide, sodium nitrate and iron to meet tank farm waste acceptance criteria.

The rate of oxidation for unreacted metals is dependent on the following factors; 1) temperature, 2) surface area to mass ratio of the metal and/or its hydride, 3) oxygen concentration, 4)

concentration of moisture, 5) the type and extent of alloying (not evaluated), and 6) the presence of a protective oxide layer. Increases in the first four factors increase the rate of oxidation, whereas, an increase in the protective layer of oxide decreases the rate of oxidation.

A recent heat transport modeling paper on uranium ignition assisted by hydride formation (Totemeier and Hayes 1996) demonstrates that the surface to volume ratio of the metal powders is a major factor determining whether ignition is possible. The surface temperature for ignition in air is approximately 450°C. If the specimen surface area to volume ratio is small, the heat is transported internally (into the metal) and the surface region may never reach the autoignition temperature. If the liberated heat was transported into the liquid phase, an analogous condition would result. Peacock (1992) has calculated, based on area/volume ratios, that uranium metal spherical particles ≥ 0.16 cm (1/16") in diameter can not ignite in air at room temperature. Ignition of uranium fuel has been observed under highly specific conditions (Solbrig, Krsul, and Olsen 1994): The fuel was sealed in containers which may have leaked and allowed some water to enter but little or no air. Consequently, the uranium corrosion reaction was dominated by reaction with water that lead to hydrogen and hydride formation. Combustion took place when the fuel was suddenly exposed to air. With respect to K Basin, the significance is that an example of combustion of uranium which was maintained under water could not be found in the literature. It is hypothesized that the reason uranium is difficult to selfignite under water is due to the superior heat transport of water as compared to air so that the surface temperature does not reach the autoignition temperature.

The oxidation process is a continuous process in which the U metal reacts with oxygen or water to form duplex oxide layers. The inner barrier layer is a thin, tenacious layer that directly forms on the metal with a thicker outer oxide layer between the barrier layer and the external environment. Both layers will inhibit oxidation by retarding the migration of oxygen or water molecules from the surrounding media to the U metal substrate. However, as this is a continuous process, some oxygen or water molecules can penetrate both layers, oxidizing the metal further and causing the outer layer of oxide to slough or spall off the metal exposing or damaging the inner barrier layer. This process will continue, as shown below, until all of the available metal or oxygen source is consumed. The reactions with water but particularly oxygen liberate large amounts of heat.

$$U + 2H_2O \rightarrow UO_2 + 2H_2\,(g) + \text{heat}\ (\Delta G^\circ = -133\ \text{Kcal/mole})$$
$$2U + 3H_2\,(g) \rightarrow 2UH_3 + \text{heat}\ (\Delta G^\circ = -35\ \text{Kcal/mole})$$
$$2UH_3 + 2O_2\,(g) \rightarrow 2UO_2 + 3H_2\,(g) + \text{heat}\ (\Delta G^\circ = -229\ \text{Kcal/mole})$$
$$U + O_2\,(g) \rightarrow UO_2 + \text{heat}\ (\Delta G^\circ = -250\ \text{Kcal/mole})$$

Recently, Spent Nuclear Fuel project characterization personnel investigated the properties of the sludge within canistered fuel at the K East Basin. Samples were vacuum drawn underwater from canisters in the basin. The sample size was approximately 500ml and consisted of particles up to 0.25 in., in cross section. The samples were transferred from a transfer container into 2-Liter graduated cylinders at an onsite laboratory, for sludge settling studies. The samples were aspirated using atmosphere and helium lances and allowed to settle. It was observed that hydrogen gas was slowly evolved from the sludge at the bottom of the graduated cylinders. X-ray diffraction of sludge samples did not reveal the presence of any metallic uranium.

There is no detailed understanding of what chemical processes took place when the canister sludge was aspirated in the graduated cylinders. However, the evolved hydrogen gas must have come

from the corrosion of metallic uranium fuel since xenon isotopes were identified in the gas and the cesium content increased in the solution above the sludge samples. The lack of x-ray diffraction confirmation of metallic uranium could be due to inhomogeneous sampling (i.e., the dense uranium metal or discrete large particles settled to the bottom of the cylinder and were not captured in the sample) or the complete corrosion of small uranium particles by the time the x-ray analysis was accomplished. What is known is that the ruptured fuel has been exposed to aqueous conditions for many years. It is surmised that the suction wand may have broken off pieces of uranium metal during its penetration into the recesses of the ruptured fuel canister. The significant question is whether uranium metal which has been exposed to water for long periods of time (meaning it is oxide coated) and because of fracture has oxide-free surfaces suddenly exposed can corrode so rapidly with concomitant heat evolution that it evolves into underwater burning or pyrophoricity.

A recent literature review (see Appendix F) was concerned with the aqueous corrosion of uranium metal and reactor grade fuel. Tyfield (1988) has made the most important experimental and relevant contributions to this field. All the aqueous corrosion work has focused on the determination of the steady state corrosion rates of uranium over significant periods of time, not the short periods associated with the sudden exposure of an oxide-free surface that must repassivate (and liberate heat during that passivation process). Tyfield (1988) determined that reactor grade uranium corrodes at a very low rate at ambient temperatures (conditions applicable to K-basin) in pure water of about 450 mg U/m^2h (8 mils/y), a rate that has not been observed to lead to underwater pyrophoricity. Tyfield's work does not mention how the uranium was pre-conditioned before starting his tests, but there is a strong implication that it was pre-exposed to storage pool water conditions until the fuel cooled down. None of the references that Danielson (1995) (see Appendix F) found indicated that uranium metal underwent an uncontrolled reaction (runaway) in aqueous conditions, and the paper by Johnson et al (1994) makes a similar observation. The low corrosion rate would insure that metallic uranium would exist for many years in the K-basin. Calculations in Appendix F indicate that a 1/4" diameter piece of uranium would require 46 years for complete dissolution; consequently, it should be no surprise that metallic uranium still exists in the ruptured fuel of K Basin.

The question of why metallic uranium exists in the K Basin but the evolution of gas (bubbling) from these regions has been observed to essentially stop seems inconsistent with the observation that when the fuel is disturbed and uranium metal is broken off, hydrogen evolution is again observed (witness the 2-liter graduated cylinder tests). It is hypothesized that the explanation lays with the original data base of Tyfield and the other experimenters who determined the corrosion rates over a short period of time, a few months rather than years; thus, their measured rates are higher than what would be observed with uranium fuel that has been exposed for years. Corrosion rates, particularly with a system in which the protective oxide thickens, gradually decrease with time, and in the K Basin may have reached such a slow rate that the hydrogen gas can diffuse away rather than form gas bubbles.

There appears to be no kinetic data in the literature for the instantaneous corrosion of a newly-bared metallic surface of an oxide-coated sample of uranium (or Zr) metal to gage whether there is an autoignition problem. This phenomenon probably takes place routinely in a spent fuel pool when the broken fuel is moved, but the fact that no fires have been observed to date is probably not adequate reassurance. A way of getting insight into this problem is to examine another metal with similar characteristics, titanium.

Titanium, Zr, and U all belong to the same Period of the Periodic Table, and their corrosion behavior is dominated by a thin, tenacious barrier oxide film. Titanium under certain conditions can undergo pyrophoricity in air and water, has a +4 valence, and forms TiO_2 as its major oxide, similarly to Zr and U. A great deal is known about the corrosion behavior of Ti (more than is known about U), and some of these studies have focused on the repassivation behavior when the Ti metal was suddenly bared (by abrasion, scraping, and fracture) in aqueous solution. Most of the studies were in acidic solution which acts to increase the corrosion rates. In all cases, Ti safely repassivates in seconds without sign of self ignition or even a significant temperature increase in the test apparatus (Beck 1978).

In water or conditions similar to the K Basin pools, the U metal will react with water forming UO_2 and UH_3. For undisturbed U metal, the corrosion rate is extremely slow (46 years for 1/4" particle) due to the layers of UO_2 protecting the U metal. Based on a literature review and observations at K Basin, U metal submerged in water will not ignite spontaneously. For disturbed U metal (i.e., the oxide layer is damaged exposing U metal), as evidenced in the graduated cylinder tests, exposed U metal in contact with water can oxidize rapidly liberating hydrogen gas. Based on a literature review and observations of the graduated cylinder tests, the disturbed U metal submerged in water, will not ignite spontaneously.

7.2.7.2 Accident Scenario Development

The following discusses the potential scenario associated with transferring the sludge from shipping cask to Tank AW-105.

U Metal Reaction During Sludge Transfers from the Shipping Cask to Tank AW-105. Currently the spent fuel stored in the K Basin is undisturbed and the existing layers of oxide are intact, i.e., there is no exposed U metal available for oxidation. The observed slow oxidation process, evidenced by the liberation of hydrogen gas bubbles from the sludge, is sufficiently controlled due to the heat transfer properties of the water, sludge and basin concrete, to maintain the oxide below autoignition temperatures. The transportation/transfer process will likely cause the existing outer oxide layer to spall, damaging the inner layer, thus exposing unreacted U metal to the basin water and tank supernatant. In addition, should the sludge be allowed to dry, the existing UH_3 could be exposed to air. Based on observations, this will also result in the release of hydrogen gas (see 7.2.6), but only the potential for an ignition of the U metal and hydride will be evaluated.

The sludge is presently stored under water at near neutral pH conditions. However, prior to transferring the sludge to Tank AW-105, it will be chemically adjusted to meet Tank Farms waste acceptance criteria by the addition of NaOH to raise the pH to approximately 12. Therefore, as part of this accident scenario, it is necessary to determine if the sludge can burst into fire during the chemical adjustment (and before it is transported to AW-105).

Tank Farms waste acceptance criteria are developed in SD-WM-TI-150, "Technical Basis for Waste Tank Corrosion Specification," and TWRS-PP-94-025, "Sludge Washing Materials Study: The Behavior of Carbon Steel in a Dilute Waste Environment". These limits were developed to inhibit uniform corrosion rates and caustic stress corrosion cracking (SCC). Waste transfers are controlled so that the composition limits in the receiving tank will not be exceeded prior to transferring additional waste into a tank. The tank composition criteria are shown in Table 7.37.

Table 7.37. Tank AW-105 Waste Composition Limits

Variable	Specification Limit
For $[NO_3^-] \leq 1.0\underline{M}$:	
(for solutions below 167°F, the $[OH^-]$ limit is 8.0$\underline{M}$)	
$[OH^-]$	$0.010\underline{M} \leq [OH^-] \leq 5.0\underline{M}$
$[NO_2^-]$	$0.011\underline{M} \leq [NO_2^-] \leq 5.5\underline{M}$
$[NO_3^-]/([OH^-] + [NO_2^-])$	<2.5
For $1.0\underline{M} < [NO_3^-] \leq 3.0\underline{M}$:	
$[OH^-]$	$0.1\ ([NO_3^-]) \leq [OH^-] < 10\underline{M}$
$[OH^-] + [NO_2^-]$	$\geq 0.4\ ([NO_3^-])$
For $[NO_3^-] > 3.0\underline{M}$:	
$[OH^-]$	$0.3\underline{M} \leq [OH^-] < 10\underline{M}$
$[OH^-] + [NO_2^-]$	$\geq 1.2\underline{M}$
$[NO_3^-]$	$\leq 5.5\underline{M}$

Based on the Tank control specifications identified above, the K Basin sludge will require the addition of $NaNO_2$, and NaOH to meet the acceptance criteria. Therefore, to determine if it can still be concluded that the U metal will not spontaneously ignite when added to Tank AW-105, the impacts of each chemical within tank AW-105, on U metal corrosion will need to be addressed. The composition of Tank AW-105 is shown in Table 7.38.

Tyfield's work (1988) is absolutely clear on the effect of raising the pH on the corrosion rate of irradiated, reactor grade uranium. The corrosion rates are significantly lower at pH 12.5 than at near neutral conditions (30°C). He measures a corrosion rate of 450 mg U/m^2h at pH of 7 versus a rate of 150 mg U/m^2h at pH 12.5. Consequently, there is no danger of a runaway reaction since the uranium metal is corroding (reacting) at an even lower rate at pH 12.5, and pyrophoric reactions have not been observed at the pH 7 condition. Therefore, it can be concluded that adjusting the pH with NaOH will decrease the potential for spontaneous ignition.

Although, not related to the spontaneous ignition of U metal, following shear-leach processing of irradiated N-Reactor fuel at the Nuclear Fuel Services facility in West Valley, New York, ignition and detonation of the N-Reactor fuel cladding was observed (Schulz 1972). Based on preliminary studies, it was determined that the HNO_3-sensitized weld beads on the ends of the fuel rods ignited, by mechanical shock, and burned. It was postulated that either the Be or a Zr-Be compound was sensitized by the HNO_3 during the leaching process. As shown in Table 7.2 both elements are present in the K Basin sludge. Based on the limited data provided in Schulz (1972) there was no

Table 7.38. Tank AW-105 Supernate Composition (concentrations in g/L)

Notes	pH	OH^-	NO_3^-	NO_2^-	Cl^-	F^-	TOC
green analysis dated 8/25/94	12.9	4.19	5.64	1.19	0.035	1.79	0.31

indication that the fires ignited the U metal or propagated to the zircalloy cladding. Two tests, that involved dipping the sensitized welds in NaOH were performed. The results of the tests indicated that dipping the sensitized welds in NaOH the potential for fires was prevented. Although this is in agreement with Tyfield, the conclusions reached (i.e., dipping the sensitized welds in NaOH will prevent fires) can not be directly applied to K Basin sludge. The K Basin sludge or the irradiated N-Reactor fuel currently stored in K Basin has not been in contact with HNO_3 and as such can not be considered sensitized.

The literature review of Danielson (1995) (see Appendix F) indicates that both nitrates and nitrites act as inhibitors for the corrosion process, but the method in which this was determined is somewhat suspect since the work involved measuring open circuit corrosion potentials rather than a direct measurement of the corrosion rate. The literature is more clear on the effects of fluoride and chloride--they have no effect at this high pH. Consequently, if the corrosion rates are no greater than what has been observed for K-basin storage conditions, it is unlikely that the uranium could ignite when added to the tank supernatant.

There is a concern that if the sludge/fuel slurry should rise above the supernatant level in Tank AW-105 and be exposed to the tank atmosphere where dryout can occur, a pyrophoric condition could result. There does not appear to be any information in the literature that directly addresses this issue of the reaction kinetics of uranium metal (with prolonged exposure to aqueous solutions) that is exposed to humid air conditions (meaning that the sludge may dry out). The pyrophoric events are associated with long-term exposure of the uranium metal to moist air in a closed container (in which the gaseous oxygen is consumed) followed by a sudden exposure to fresh air containing oxygen when the container is opened. Two recent papers (Johnson et al 1994; Guenter et al 1994) dealing with the conditioning of spent nuclear fuel from wet (aqueous) storage pools to dry storage do not mention the existence of any kinetic data for the oxidation process. There is insufficient data to assess the likelihood of pyrophoricity for this scenario.

7.2.7.3 Unmitigated Accident Scenario

Based on the information provided in the previous paragraphs, the unmitigated accident of concern is the potential for a pyrophoric reaction of exposed sludge. That is, assuming the sludge is immersed in the tank supernatant and has been chemically adjusted to approximately pH=12, there is no potential for a fire. However, it can not be concluded based on the literature review that exposed sludge will not spontaneously combust.

The sludge will be distributed within Tank AW-105 using the existing slurry distributor. Past tank additions, using the slurry distributor, have created high spots and valleys in the sludge. Based

on the data reported in the TF WCS, there may be as much as 10 inches (estimate based on the elevation of the sludge supernatant interface level) difference in the elevation of the sludge. However, this data is based on Tank AW-105 sample data taken from two risers and may not reflect the maximum elevation changes in the sludge level.

Due to differences in the specific gravities (SpG) of K Basin sludge [estimated range between 1.5 g/cc to 2.3 g/cc (Bergsman 1997)] and Tank AW-105 supernatant [estimated at 1.04 g/cc (Black, 1997)] and solids [estimated at 1.22 g/cc (Black, 1997)], the K Basin sludge will sink through the supernate layer and will likely begin sinking in the solids immediately after reaching the solids layer. That is, the sludge would be immersed in an alkaline solution or AW-105 solids from the time the material is introduced to the tank, thus precluding an uranium fire. However, for this analysis, it was assumed that the K Basin sludge does not sink into the AW-105 solids. It was assumed to accumulate at the surface of the AW-105 solids layer forming a mound.

Gravel or other materials, when discharged from a chute, will create a conical mound. The side slope or angle of repose is based on the characteristics of the material, e.g., shape and size, and consolidation of the material, e.g., loose or dense packed and the conditions, e.g. saturated or unsaturated. These factors determine the angle of sliding friction or maximum angle of repose and height of the mound or cone. For this analysis it is assumed that the K Basin sludge is comprised of silts and larger size particles, similar to quartz, feldspar and/or calcite. For saturated surface conditions the angle of sliding friction for quartz, feldspar and calcite are 24°, 38°, and 34°, respectively (Das 1983). These values are within the ranges published in Huang (1983) and Lambe and Whitman (1969) for unsaturated surface conditions and soils exhibiting similar characteristics (e.g., shape and size). For conservatism, the height of the mound is based on the larger of the three angles of sliding friction or 38°.

The height of the cone was calculated, assuming a maximum of 1.8m^3 of K Basin solids per shipment (6 m^3/shipment at 30 vol% solids). The height of the cone or maximum height of the mound was calculated to be approximately 1.0 m (39 inches) with a diameter of 2.6 m (102 inches) at the base of the cone. It could be assumed that the cask flush water would flatten the cone; however, the effects of the flush water on the mound are uncertain and can not be credited as a mitigative feature. The volume of liquids (K Basin water and cask flush water) are not adequate to cover the mound.

For the purposes of the unmitigated analysis the mound is exposed to the tank headspace. That is, the effects of sludge settling and the presence of supernatant are ignored. Based on the literature review and the lack of data characterizing the pyrophoricity of wetted U metal that is allowed to dry it was assumed that the U metal in the mound could spontaneously ignite. The ensuing fire could ignite the flammable gasses in the headspace and the organic solvents contained in the supernatant.

Unmitigated Frequency Assessment

It is assumed, due to the lack of available data, that the U metal in the K Basin sludge will ignite spontaneously if exposed to the tank headspace (probability = 1). Exposing the sludge to the tank headspace could be due to human error, i.e., inadequate tank waste characterization (i.e., AW-105 solids and supernatant levels) prior to the sludge transfer from the cask to the tank or improper

positioning of the slurry distributor. Human errors are typically assigned a failure rate of 1 per 100 operations (non-stress condition), thus exposing the sludge to the tank headspace is considered an "anticipated" event. Assuming the flammable gas safety controls identified in the TWRS BIO are in operation and operable, flammable gas or organic solvent fires are considered "unlikely" events (1E-02 to 1E-04 per year) given an ignition source.

Unmitigated Consequence Assessment

A fire within a double-shell tank was analyzed in the TWRS BIO (LMHC 1997). Two accident scenarios were evaluated: 1) flammable gas deflagrations in the tank headspace, and 2) organic solvent fires. These accidents are credible events and are considered "anticipated" events. Based on the results of the unmitigated accident analyses, Technical Safety Requirements (TSRs) and safety class and/or safety significant system, structures, or components were identified that are relied upon to prevent the occurrence. As these are preventive measures, the mitigated and unmitigated consequences are the same.

The chemistry and physics of a potential pyrophoric reaction involving K Basin sludge is uncertain due to insufficient characterization data at this time. As a result, it is premature to develop estimates of the amount of waste and sludge that would react under tank conditions and the subsequent effects on the tank structures and components. However, reasonable estimates of aerosol releases from a pyrophoric reaction can be derived from TWRS BIO estimates of aerosol releases from solvent fires (see WHC-SD-WM-CN-032, Rev 0A, Cowley and Postma 1996). The calculated release quantities and consequences are provided for information only as there is insufficient information to judge whether or not the following calculations are bounding.

The accident scenario involves dryout of the sludge in the tank leading to a spontaneous reaction involving pyrophoric materials in the sludge. For pyrophoric fires (as represented by solvent fires), the release would consist of three main components: 1) release of materials in the ventilation system; 2) release of smoke/particulates from the burning material; and 3) aqueous boiloff. The release of materials from the ventilation system was previously estimated at 0.001 L of waste (see Section 7.2.6.6). The release quantities from the other two components are derived below.

Aerosol material released from burning sludge was calculated assuming the fire starts at a point and burns a half-sphere of sludge 1 m in diameter. The volume of this half-sphere was calculated to be 262 L of sludge. No credit was taken for quenching effects of the liquid layer that would be underneath the sludge exposed in the tank. This volume is larger than the violume of solvent burned in the largest fire considered by Cowley and Postma (1996).

Aqueous boiloff calculations assumed that entrainment of waste from the tank waste surface is negligible relative to material aerosolized due to evaporation of liquid. Therefore, entrainment was neglected in the following calculations. According to Cowley and Postma (1996), the mass of water evaporated from a solvent fire was estimated to be 1.26 times the mass of fuel burned. This value was used here to reflect sludge boiloff from the K Basin sludge layer in the tank in spite of the fact that the formula is based on burning solvents. Based on the formula given above, the total volume of water boiled as a result of the fire would 1.26 * 262 L = 330 L.

Aerosol release fractions for these two components of the release from a fire were taken from DOE-HDBK-3010-94. For burning sludge, a release fraction of 1E-03 was determined to be applicable. This value is representative of the airborne release due to oxidation of uranium metal in flowing air at temperatures greater than 900°C. The release fraction used for aqueous boiloff was 2E-03 and is representative of releases from boiling liquid surfaces. Using these release fractions, a total of 0.262 L of sludge would be released from the burning component and 0.660 L of aerosols would be release due to boiloff.

The consequences of this scenario were calculated using the ULDs for K Basin sludge solids and liquids (not the unit doses given in Table 7.9 as the unit doses are for composite solids and liquids). Therefore, the method used in the TWRS BIO was used to calculate the cosnequences of a pyrophoric chemical reaction. The consequences of the vent system release were determined in Section 7.2.6.6 to be 1.83E-03 Rem onsite and 1.23E-06 Rem offsite. The consequences of the release of smoke/particulates from the fire are:

$$C_{onsite} = ST * ULD * BR * X/Q$$
$$= (0.262\ L)\ (1.65E{+}08\ Rem/L)\ (3.3E{-}04\ m^3/sec)\ (0.0341\ sec/m^3)$$
$$= 486\ Rem$$

$$C_{offsite} = (0.262\ L)\ (1.65E{+}08\ Rem/L)\ (2.7E{-}04\ m^3/sec)\ (2.8E{-}05\ sec/m^3)$$
$$= 0.327\ Rem$$

The consequences of the release due to aqueous boiloff are:

$$C_{onsite} = (0.660\ L)\ (1.63E{+}05\ Rem/L)\ (3.3E{-}04\ m^3/sec)\ (0.0341\ sec/m^3)$$
$$= 1.21\ Rem$$

$$C_{offsite} = (0.660\ L)\ (1.63E{+}05\ Rem/L)\ (2.7E{-}04\ m^3/sec)\ (2.8E{-}05\ sec/m^3)$$
$$= 8.14E{-}04\ Rem$$

The total consequences are:

$$C_{total} = C_{vent} + C_{burning} + C_{boiloff}$$

For the onsite MEI, the total consequences were estimated to be 487 Rem. For the offsite MEI, the total dose was estimated to be 0.328 Rem. The doses were dominated by the sludge burning component of the release.

7.2.7.4 Mitigated Accident Scenario

As discussed in the TWRS BIO, there are no mitigative measures available to mitigate the consequences of a flammable gas or organic solvent fire. Therefore, the mitigated accident scenario analysis takes credit for barriers to prevent the occurrence of a U metal fire. The preventive barriers relied upon in the TWRS BIO are an active ventilation system, ignition source control, and flammable gas monitoring. These systems are assumed operable and operating during the transfer.

The unmitigated analysis assumed the sludge massed in a mound is exposed to the tank headspace and spontaneously ignited. As in the unmitigated analysis, the mitigated analysis assumes that the three preventive controls identified in the TWRS BIO are operable and functioning properly at the time the K Basin sludge is transferred to Tank AW-105. It has been previously established that by maintaining the U metal immersed in liquids, there is no potential for a pyrophoric reaction; therefore, the controls evaluated have been selected based on their potential to ensure the U metal remains immersed in the supernatant. The potential mechanisms that may be relied upon include the following:

- Fully characterizing the solids and supernatant levels in AW-105 and indexing the slurry distributor to an appropriate location, based on the quantity of K Basin sludge solids to be shipped.
- Maintaining the K Basin sludge density greater than the Tank AW-105 sludge density to ensure sludge settling.
- Limiting the amount of sludge transferred on a per shipment basis to ensure the top of the mound is not exposed to the tank headspace.
- Maintaining the existing per shipment quantities and stopping during the transfer to reindex the slurry distributor.
- Adding water to raise the supernate level above the top of the K Basin sludge "cone".

Each of these potential controls are evaluated in the following paragraphs.

Fully characterizing the solids and supernatant levels in AW-105 and indexing the slurry distributor. This control would require the predetermination of the solids and supernatant levels in AW-105 and the quantity of K Basin sludge solids to be shipped as part of the waste compatibility analysis. A calculation of the maximum K Basin sludge cone or mound height, similar to the calculation performed in the unmitigated accident analysis, would be required prior to transferring the K Basin sludge to AW-105. The supernatant level, with respect to the solids level in AW-105, and the calculated maximum K Basin sludge cone or mound height plus a safety margin, would be used as inputs to determine the index or position of the slurry distributor. That is, the slurry distributor would be indexed or positioned to a location that assures coverage of the K Basin sludge cone or mound.

Maintaining the K Basin sludge density greater than the Tank AW-105 sludge density to ensure sludge settling. This option would require a large difference in the K Basin sludge and tank AW-105 solids densities. Because the K Basin sludge will be essentially sprayed and allowed to fall, by gravity, the smaller particles may spread on the surface of the sludge allowing the larger particles to settle, thus limiting the size of the mound. Assuming that this does occur, the mound analyzed in the unmitigated analysis will remain immersed in the supernatant. However, until a mixing study has been performed, reliance on this as a control may not be satisfactory.

Limiting the amount of sludge transferred on a per shipment basis to ensure the top of the mound is not exposed to the tank headspace. As discussed in the unmitigated analysis, 1.8m^3 of K Basin sludge, based on a 46 in supernatant level, will not result in exposing the mound to the tank headspace. Predetermining the differences in the AW-105 solids level and superntatant levels, a limit on the quantity of K Basin sludge to be shipped can be calculated, based on the maximum potential cone or mound height, plus a safety margin.

This may increase the number of shipments required. As discussed in the mixing analysis, further evaluation of the K Basin/Tank AW-105 sludge interaction (i.e., mixing and settling) and the effects of the slurry distributor and particle size on the size or height of the mound and specific to this analysis the elevation of the sludge and slurry, would help to determine the applicability and effectiveness of this control.

Maintaining the existing per shipment quantities and stopping during the transfer to reindex the slurry distributor. Although this will not result in an accidental release of material, the potential for line plugging due to solids settling in the transfer line when the transfer is stopped, is increased.

Adding water to raise the supernate level above the top of the K Basin sludge "cone". The addition of water to the tank, plus a safety margin, could be implemented to raise the supernate surface above the top of the calculated maximum cone or mound (plus a safety margin) of K Basin solids. This would prevent the top of the cone from being exposed to the relatively dry conditions in the tank headspace, ensure the entire cone remains submerged in supernate, and preclude ignition of the U metal in the sludge. This would affect the available storage capacity in the DST farms.

Mitigated Frequency Assessment

Selection of any of the controls identified in the mitigated accident analysis will ensure that the sludge is not exposed to the Tank AW-105 headspace; therefore, spontaneous ignition of the sludge would be "incredible". However, each of the analyzed controls rely on human actions.

The controls evaluated require a human to calculate supernatant levels, monitor and analyze sludge SpG, quantities shipped, or interrupt a transfer and reindex the slurry distributor. Prior to shipping the K Basin sludge to Tank AW-105, a waste compatibility analysis is required to determine the acceptability of the sludge This waste compatibility analysis typically includes mixing/settling studies to determine the K Basin sludge interactions with AW-105 supernate and solids. Therefore, because of the uncertainties associated with the composition of Tank AW-105 sludge (i.e., two current sample locations and the potential for non-homogenous sludge), the potential for a spontaneous ignition of the K Basin sludge is conservatively considered an "unlikely" event.

Positioning or indexing the slurry distributor to an appropriate location to ensure coverage of the K Basin sludge mound or cone based on the sludge and supernatant levels within tank AW-105 will preclude sludge dryout and the potential ignition of pyrophoric U metal. This would require operators to verify that the liquid level is sufficient to maintain the mound or cone of K Basin solids is submerged beneath the liquid surface. The potential for a spontaneous ignition of the K Basin sludge with this control in place is considered an "incredible" event.

Reducing the quantity shipped, based on the sludge and slurry elevations (i.e., supernatant depth) will ensure the K Basin sludge is immersed in the supernatant. Therefore, the potential for a spontaneous ignition of the K Basin sludge is considered an "incredible" event.

Interrupting a transfer and reindexing the slurry distributor to prevent localized K Basin sludge build-up would require an operator to stop the transfer operation and reindex the slurry distributor to a pre-determined distribution position (developed during the waste compatibility analysis). Therefore, because the slurry distributor positions will be pre-determined, based on the sludge and supernatant elevations, the potential for a spontaneous ignition of the K Basin sludge is conservatively considered an "extremely unlikely" event. However, associated with this control is the potential for transfer line plugging due to solids settling.

The addition of water to AW-105 to preclude dryout of the sludge and the potential ignition of pyrophoric U metal would require operators to verify that the liquid level is sufficient to maintain the mound or cone of K Basin solids submerged beneath the liquid surface. The potential for a spontaneous ignition of the K Basin sludge with this control in place is considered an "incredible" event.

Mitigated Consequence Assessment

Based on the TWRS BIO analysis fires within DSTs can not be mitigated. Therefore, the mitigated consequences are the same as the unmitigated consequences (see Table 7.X.3). The identified preventive measures (i.e., active ventilation system, ignition control and flammable gas monitoring) reduce the potential for the accident to occur, (i.e., lower frequency) from "anticipated" to "unlikely". The potential for the spontaneous ignition of U metal was not evaluated in the TWRS BIO; therefore, assuring the U metal is not exposed to the tank headspace as a preventive barrier will not reduce the likelihood of occurrence.

7.2.7.5 Uncertainties Associated with the Analyses

The following identify each of the uncertainties associated with the analyses.

- The effects of exposing wetted U metal to the tank headspace or to atmosphere are not clearly characterized and impact all evaluations, with regard to the potential for a spontaneous ignition.
- The elevation of the Tank AW-105 sludge and supernatant.
- The K Basin/Tank AW-105 sludge interaction, in particular sludge settling and mixing.
- The effects of the slurry distributor on the behavior of the K Basin sludge with respect to the potential for creating a mound of sludge that could be exposed to the tank headspace.

7.2.8 Criticality Safety Summary

An active criticality safety program has been in place at Hanford since the beginning of plutonium production. All operations, including those at the K Basins and at tank farms, have been

conducted in conformance with procedures, limits and controls established to ensure criticality safety. However, deterioration of fuel elements and disposal of the resulting sludge at tank farms are conditions which have not been evaluated. This sludge is different from routine waste sent to tank farms in the past; i.e., it is not the product of typical operations in a separations plant in which the uranium and plutonium have been dissolved and precipitated.

A significant number of the spent N Reactor fuel elements stored in the KE and KW Basins were damaged to the extent that the uranium metal fuel is exposed to the water and has deteriorated. This process has led to the formation of K Basin sludge. The criticality safety requirements for several storage alternatives are identified in the *Criticality Feasibility Study*.

No uranium enriched above 0.947 wt% U-235 has been stored in the KE Basin; however, KW Basin contains 628 MTU of fuel enriched above 0.95 wt%, but no higher than 1.25 wt% U-235. Characterization of KW Basin sludge is incomplete. In the absence of analyses showing otherwise, uranium in KW Basin sludge must be considered enriched to 1.25 wt% U-235.

For 0.95 wt% enriched uranium rods, the minimum critical mass is about 2,630 kg uranium (25 kg U-235), and for 1.25 wt% enriched uranium, the minimum critical mass is about 600 kg uranium (7.5 kg U-235). Criticality is precluded for 0.95 wt% uranium in the form of particles with dimension (diameter) less than 0.13 cm (0.05 inches). For 1.25 wt% enriched uranium criticality is possible for any particle size, but requires about 1,500 kg of uranium (18 kg U-235) for particles smaller than 0.13 cm.

Based on a Conservative Waste Model (CWM) with reduced neutron absorption and optimized water developed by Rogers (1993), the subcritical limit for plutonium concentration in waste solids is 2.6 g/L. For some of the K Basin sludges, the sum of the U-235 and plutonium concentrations may exceed this value and the ratio of neutron absorbers to U-235 and plutonium must be relied upon for assurance that a criticality cannot occur.

Whyatt et al (1996) concludes that plutonium primarily resides in the solid phase of the tank waste in the form of agglomerates. The solubility of plutonium in alkaline salt solution is low enough that saturation concentrations in the waste liquids are at least 30 times lower than the minimum concentration needed to support a criticality. Tank waste is maintained alkaline to ensure that the uranium and plutonium remain combined with the solids. K Basin sludge will be made alkaline with a pH of at least 8 before transfer into DST AW-105.

7.2.8.1 Sludge Characterization

The total uranium in KE Basin sludge is estimated to be 26,281 kg, (Lodwick 1997) and the maximum ^{235}U enrichment is 0.95 wt%. Most of the sludge in KW Basin is contained within sealed canisters although some sludge exists in the pits. The sludge inventory in KW Basin is estimated to contain 12,968 kg (Lodwick 1997) of uranium oxide enriched between 0.95 and 1.25 wt%. No analyses of KW Basin sludge are available. Assuming all 12,968 kg of the uranium oxide is 1.25 wt% enriched, there is theoretically enough enriched uranium for criticality.

DST AW-105 is 75 ft in diameter and contains 1,665,000 L (440,000 gal) of waste from the processing of fuel at the Plutonium Uranium Reduction Extraction Plant (PUREX) (Hanlon 1996).

The Double Shell Tank Plutonium Inventory System shows the December 1996 inventory for DST AW-105 to be 22.95 kg. The largest measured plutonium concentration for this tank is 0.024 g/L (Braun et al. 1994), less than 1% of the minimum required for criticality under the most idealized conditions. The average plutonium areal density is estimated to be 61.0 g/m^2 (5.75 g/ft^2), a value only 2.3% of the minimum critical areal density. Using process records, Agnew (1995) determined the sum of the insoluble absorber actual-to-minimum subcritical fractions to be 18.6 and the sum of subcritical fractions for the soluble components to be 54.4. However, when data from core samples is used, lower mass ratios may be obtained from individual samples due to variations in compositions at different locations and the failure to include all waste components in the analysis. The lowest sum of subcritical fractions for insoluble absorbers reported by Braun et al. (1994) is 0.50 and for soluble absorbers the lowest fraction is 15.

7.2.8.2 Chemistry Evaluation

Chemical processes are capable of changing the uranium or plutonium concentrations in K Basin sludge. Studies of plutonium chemistry of tank waste are documented by Serne et al. (1996) and by Whyatt et al. (1996). However, K Basin sludge contains particles of enriched uranium metal, and the associated chemistry may or may not be similar to that of plutonium as described in these earlier studies. As part of the *Criticality Feasibility Study* for K-Basin sludge, chemical processes capable of increasing or inhibiting the segregation of uranium are being evaluated. An important question of chemistry is whether it is acceptable to add iron as finely divided particles or whether it is necessary to dissolve the uranium and coprecipitate it with iron.

7.2.8.3 Particle Size

The average size of particles in K Basin sludge is several times larger than in tank farm sludge, and the largest particles are orders of magnitude larger. However, a small particle size is desirable because it increases the margin of criticality safety. Limiting the largest particle to a dimension no greater than 0.13 cm (0.05 in.) provides assurance of subcriticality for 0.95 wt% enriched uranium, but not for 1.25 wt% uranium.

Small particle size is also of importance for inhibiting fissile material segregation and for enhancing the formation of stable agglomerates with neutron absorbers. The particle size requirements for K Basin sludge are detailed in the *Criticality Feasibility Study*.

7.2.8.4 Addition of Neutron Absorbers

Iron and depleted uranium are desirable components of sludge since they absorbs neutrons. Analyses of K Basin sludge shows that the iron content varies from sample to sample, and some sludge does not have an adequate amount of iron to assure subcriticality. Therefore, assurance of criticality safety may require the addition of iron or other neutron absorbers such as depleted uranium to each transport container load in proportion to the uranium present in the sludge. The requirements for addition of neutron absorbers are described in the *Criticality Feasibility Report*.

7.2.8.5 Sampling of Transport Container Contents

It is expected that samples will be taken from each transport container load and analyzed for: (1) the uranium, plutonium, and iron content; (2) the ^{235}U enrichment in the uranium; and, (3) pH. These samples can be used to provide verification of compliance to the limits and controls. However, specific sampling and absorber requirements will developed in the *Criticality Feasibility Report*.

7.2.8.6 Combining K Basin and DST AW-105 Sludge

Uranium in KW Basin sludge is more highly enriched than uranium in KE Basin sludge, and the fraction of absorbers in KW Basin sludge is lower. For these reasons, KW Basin sludge is capable of greater neutron multiplication. Sludge in DST AW-105 has a lower fissile concentration and a larger absorber fraction than does either KE or KW Basin sludge. When these sludges are combined, the margin of subcriticality is determined primarily by KW Basin sludge.

If DST AW-105 sludge and K Basin sludges are mixed, any localized regions of high fissile concentration would disperse and the highest fissile concentration would decrease. Mixing the sludges will not decrease the degree of subcriticality.

7.2.8.7 Criticality Issue Resolution

A *Criticality Feasibility Study* for K Basin sludge storage is being prepared to identify the requirements needed to assure criticality safety for various storage alternatives. This study will identify particle size, neutron absorber, and other requirements in sufficient detail for use in selecting a preferred alternative. After a preferred treatment and/or storage alternative is identified, a Criticality Safety Evaluation Report (CSER) will be issued to validate specific control requirements.

7.3 PRELIMINARY HAZARD CATEGORIZATION

An initial hazard categorization was determined for the Sludge Transportation System and Receiving Station using the procedures described in U. S. Department of Energy (DOE) Standard 1027-92, *Hazard Categorization and Accident Analysis for Compliance with DOE Order 5480.23, Nuclear Safety Analysis Reports* (DOE 1992). The hazard categorization was based on the numerical limits specified in DOE Standard 1027-92. The hazard categorization for the K Basin sludge offload process was considered in the context of the tank farm hazard categorization because the sludge material is to be transferred into a DST, located in the Hanford Site tank farms, for which an initial hazard categorization has already been established (WHC 1995).

DOE Standard 1027-92 requires hazard categories to be established based on a comparison of the radionuclide inventories in a facility to Threshold Quantities (TQs) listed in Table A.1 of the Standard for Hazard Category 2 and 3 facilities. The fraction represented by the inventory of each radionuclide divided by its respective TQ value is calculated for each radionuclide. The sum of the fractions is calculated by adding together the fractions calculated for each radionuclide; the sum is then compared to 1.0. If the sum of fractions value calculated using the Category 2 threshold quantities is greater than 1, the facility is at least a Hazard Category 2. Threshold quantities are not provided for designating a facility as Hazard Category 1.

The sum of fractions for the largest potential inventory of K Basin sludge to be transferred to the tank at any given time was determined to be greater than 1. The inventory was represented by the radionuclide inventory in a single shipment of sludge, consisting of 6 m^3 as-settled sludge (30% by volume) plus the remainder K Basin water). Therefore, the initial hazard categorization for the K Basin sludge offload process is at least Hazard Category 2. This is consistent with the Hazard Categorization for the tank farms as stated in WHC-SD-WM-HC-016, REV 0 (WHC 1995)[1]. Since there are no TQs for designating a facility as Hazard Category 1, storage of K Basin sludge in a DST would not change the existing tank farm Hazard Category.

A draft addendum to WHC (1995) has been prepared and submitted for review. The hazard categorization information in this section was extracted from the draft addendum.

REFERENCES

Agnew, S. F. 1995. *Hanford Defined Waste: Chemical and Radionuclide Compositions*. LA-UR-94-2657, Rev. 2. Los Alamos National Laboratory, Los Alamos, New Mexico.

AIHA. 1989. *Concepts and Procedures for the Development of Emergency Response Planning Guidelines (ERPGs)*. American Industrial Hygiene Association, Akron, Ohio.

Beck, T. R. 1978. "Passivation of New Titanium Surfaces." Chapter published in the book, *Passivity of Metals*, edited by R. P. Frankenthal and J. Kruger. The Electrochemical Society, Princeton, NJ.

Benhardt, H., et al. 1994. *Savannah River Site Human Error Data Base Development for Non-Reactor Nuclear Facilities*. WSRC--TR-93-581, Westinghouse Savannah River Co., Savannah River Site, Aiken, South Carolina.

Bergsman, K. H. 1997. *Heat Transfer Analysis of Sludge Storage in the K East Basin Weasel Pit*. HNF-SD-SNF-TI-047, Rev. 0. Duke Engineering and Services, Hanford Inc. Richland, Washington.

Braun, D. J. 1994. *High-Level Waste Tank Subcriticality Safety Assessment*. WHC-SD-WM-SARR-003, Rev. 0. Westinghouse Hanford Co., Richland, Washington.

Cowley, W. L. 1996. *Development of Radiological Concentrations and Unit Liter Doses for Tank Waste Remediation System Final Safety Analysis Report Radiological Consequence Calculations*. WHC-SD-WM-SARR-037, Rev 0. Westinghouse Hanford Co., Richland, Washington.

Cowley, W. L., and A. K. Postma. 1996. *Analysis of Consequences of Postulated Solvent Fires in Hanford Site Waste Tanks*. WHC-SD-WM-CN-032, Rev. 0A. Westinghouse Hanford Co., Richland, Washington.

Craig, D. K. et al. 1993. *Toxic Chemical Classification and Risk Acceptance Guidelines for Use in DOE Facilities*. WSRC-MS-92-206, Rev 2. Westinghouse Savannah River Co., Aiken, South Carolina.

Das, B. M. 1983. *Advanced Soil Mechanics*. Hemisphere Publishing Corporation, New York, New York.

Dexter, A., and W. Perkins. 1982. *Component Failure-Rate Data with Potential Applicability to a Nuclear Fuel Reprocessing Plant*. DP-1633, E.I. du Pont de Nemours & Co., Savannah River Laboratory, Aiken, South Carolina.

DOE. 1992. *Hazard Categorization and Accident Analysis for Compliance with DOE Order 5480.23, Nuclear Safety Analysis Reports*. DOE-STD-1027-92. U. S. Department of Energy, Washington D.C.

DOE. 1994. *Recommended Values and Technical Bases for Airborne Release Fractions (ARFs), Airborne Release Rates (ARRs), and Respirable Fractions (RFs) for Materials from Accidents in DOE Fuel Cycle, Ex-Reactor Facilities*. DOE-HDBK-3010-94, U.S. Department of Energy, Washington, D.C.

DOE-RL. 1994. *Emergency Implementation Procedures*. DOE-0223. U. S. Department of Energy, Richland Field Office, Richland, Washington.

EPA. 1988. *Limiting Values of Radionucllide Intake and Air Concentration and Dose Conversion Factors for Inhalation, Submersion, and Ingestion*. EPA 520/1-88-020. U. S. Environmental Protection Agency, Washington D.C.

EPA. 1992. *Manual of Protective Action Guides and Protective Actions for Nuclear Incidents*. U. S. Environmental Protection Agency, Washington D.C.

Fischer, L.F. et al. 1987. *Shipping Container Response to Severe Highway and Railway Accident Conditions*. NUREG/CR-4829. U. S. Nuclear Regulatory Commission, Washington D.C.

Grove Engineering. 1992. *Microskyshine Manual*. Rockville, Maryland.

Grove Engineering. 1996. *Microshield Version 5 User's Manual*. Rockville, Maryland.

Green, A., and A. Bourne. 1972. *Reliability Technology*. Wiley-Interscience, New York, New York.

Green, J. R., B. D. Flanagan, and H. W. Harris. 1996. *Hanford Site Truck Accident Rate, 1990-1995*. WHC-SD-TP-RPT-021, Rev 0. Westinghouse Hanford Co., Richland, Washington.

Grigsby J. M. and Leach C. E. 1996. *Flammable Gas/Slurry Growth Unreviewed Safety Question: Justification for Continued Operation for the Tank Farms*. WHC-SD-WM-JCO-007, REV. 0A, Westinghouse Hanford Company, Richland, Washington.

Guenter, R. J., E. R. Gilbert, A. B. Johnson, A. L. Lund, S. P. Pednekar, and W. E. Windes. 1994. "Basis for Assessing the Movement of Spent Nuclear Fuels from Wet to Dry Storage at the Idaho Chemical processing Plant" presented at the DOE Spent Nuclear Fuel, Challenges, and Initiatives Conference, December 13-16, 1994. PNL-SA-24585. Pacific Northwest Laboratory, Richland, Washington.

Hall, B. W. 1996a. *Calculation Notes in Suppoty of TWRS FSAR Spray Leak Accident Analysis*. WHC-SD-WM-CN-048, Rev. 1. Westinghouse Hanford Co., Richland, Washington.

Hall, B. W. 1996b. *Calculation Notes for Surface Leak Resulting in Pool, TWRS FSAR Accident Analysis*. WHC-SD-WM-CN-049, Rev. 0. Westinghouse Hanford Co., Richland, Washington.

Hanlon, B. M. 1996. *Tank Waste Summary Report for Month Ending June 30, 1996.* WHC-EP-0182-89. Westinghouse Hanford Co., Richland, Washington.

Hodgson, K. M., R. P. Anantamula, S. A. Barker, K. D. Fowler, J. D. Hopkins, J. A. Lechelt, D. A. Reynolds (Westinghouse Hanford Co.), D. C. Hedengren, R. E. Stout, and R. T. Winward (Meier Associates, Inc.). 1996. *Evaluation of Hanford Tanks for Trapped Gas.* WHC-SD-WM-ER-526, Rev. 1. Westinghouse Hanford Co., Richland, Washingotn.

Huang, Y. H. 1983. *Stability Analysis of Earth Slopes.* Van Nostrand Reinhold Company, New York, New York.

IEEE. 1984. *Guide to the Collection and Presentation of Electrical, Electronic, Sensing Component, and Mechanical Equipment Reliability Data for Nuclear Power Generating Stations.* IEEE-STD-500-1984. Sponsored by the Nuclear Power Engineering Committee of the IEEE Pow.

Johnson, A. B. , R. G. Ballinger, and K. A. Simpson. 1994. "Kinetic and Thermodynamic Bases to Resolve Issues Regarding Conditioning of Uranium Metal Fuels" presented at the *DOE Spent Nuclear Fuel, Challenges, and Initiatives Conference*, December 13-16, 1994. PNL-SA-24458. Pacific Northwest Laboratory, Richland, Washington.

Lambe, T. W. And R. V. Whitman. 1969. *Soil Mechanics.* John Wiley and Sons, New York, New York.

LMHC. 1997. *Tank Waste Remediation System Basis for Interim Operation.* HNF-SD-WM-BIO-001, Revision F. Lockheed- Martin Hanford Company, Richland, Washington.

Lodwick, R. J. Letter to M. S. Madden (PNNL), E. V. Morrey (PNNL), and R. L. Schlosser (LMHC). "K Basin Sludge Inventories to be Used in Sludge Disposal Evaluations - Preliminary Safety Assessment, Criticality Feasibility Report, Process Alternatives." DESH-9752731. March 27, 1997. Duke Engineering Services-Hanford, Richland, Washington.

Makenas, B. J., T. L. Welsh, R. B. Baker, D. R. Hansen, and G. R. Golcar. 1996. *Analysis of Sludge from Hanford K East Basin Floor and Weasel Pit.* WHC-SP-1182. Westinghouse Hanford Co., Richland, Washington.

Napier, B. A., R. A. Peloquin, D. L. Strenge, and J. V. Ramsdell. 1988. *GENII - The Hanford Environmental Radiation Dosimetry Software System.* PNL-6584. Pacific Northwest Laboratory, Richland, Washington.

NFPA 70, 1993. "National Electric Code, Articles 500 - Hazardous (Classified) Locations and 501 - Class I Locations." 1993 Edition, National Fire Protection Association.

NFPA 77, 1993. "Recommended Practice on Static Electricity." 1993 Edition, National Fire Protection Association.

NFPA 496, 1993. "Standard for Purged and Pressurized Enclosures for Electrical Equipment." 1993 Edition, National Fire Protection Association.

Nuclear Safety Analysis Center. 1984. *Risk Assessment of Oconee Unit 3*. NSAC/60. Electric Power Research Institute, Palo Alto, California.

Peacock, H. B. 1992. *Pyrophoricity of Uranium (U)*. WSRC-TR-92-106. Westinghouse Savannah River Company, Aiken, South Carolina.

Pearce, K. 1995b. FAX message on composition of waste tanks AW-103 and AW-105 to Mike Danielson of PNL from Kathleen Pearce of WHC. July 11, 1995.

Pelto, P., et al. 1982. *Analysis of LNG Peakshaving Facility Release Prevention Systems*. PNL−4153, Pacific Northwest (National) Laboratory, Hanford Site, Richland, Washington

Portland General Electric. 1992. *Trojan Nuclear Power Station Individual Plant Examination*. Portland, Oregon.

Powers, T. B. and Sawtelle G. R. 1996. *Tank Farm Deflagration Rates Due to Various Ignition Sources*. WHC-SD-WM-CN-041, REV. 0. Westinghouse Hanford Company, Richland, Washington.

Powers, T. B., R. M. Marusich, and D. J. Braun. 1996. *Chemical Reaction in a DCRT*. WHC-SD-WM-CN-073, Rev. 1. Westinghouse Hanford Company, Richland, Washington.

Rogers, C. A. 1993. *An Analytical Model for Evaluating Subcritical Limits for Waste in Hanford Site Storage Tanks*. WHC-SD-SQA-CSA-20356. Westinghouse Hanford Company, Richland, Washington.

Russell, K. D. et al. 1992. *Integrated Reliability and Risk Analysis System (IRRAS) Version 4.0 Reference Manual*. NUREG/CR-5813, EGG-2664. Idaho Falls, Idaho.

Sandia National Laboratories. 1987. *Analysis of Core Damage Frequency from Internal Events (NUREG/CR-1150) Methodology Guidelines*. NUREG/CR-4550, Vol. 1. Sandia National Laboratories, Albuquerque, New Mexico.

Schreckhise, R. G., K. Rhoads, J. S. Davis, B. A. Napier, and J. V. Ramsdell. 1993. *Recommended Environmental Dose Calculation Methods and Hanford-specific Parameters*. PNL-3777, Rev 2. Pacific Northwest National Laboratory, Richland, Washington.

Serne, R. J. et al. 1996. *Fluid Dynamics, Particulate Segregation, Chemical Processes, Natual Ore Analog, and Tank Inventory Discussions That Relate to the Potential for Criticality in Hanford Tanks*. WHC-SD-WM-TI-757. Westinghouse Hanford Co., Richland, Washington.

Shulz, W. W. 1972. *Shear-Leach Processing of N-Reactor Fuel - Cladding Fires*. ARH-2351. Atlantic Richfield Hanford Company, Richland, Washington.

Solbrig, C. W., J. R. Krsul, and D. N. Olsen. 1994. "Pyrophoricity of Uranium in Long Term Storage Environments" presented at the *DOE Spent Nuclear Fuel, Challenges, and Initiatives Conference*, December 13-16, 1994. ANL/TD/CP-84441. Argonne National Laboratory, Idaho Falls, Idaho.

Totemeier, T. C. and S. L. Hayes. 1996. "Analytical and Numerical Models of Uranium Ignition Assisted By Hydride Formation" presented at *The 1996 DOE Spent Nuclear Fuel and Fissile Material Management Conference*, June 16-20, 1996. Argonne National Laboratory, Idaho Falls, Idaho.

Tyfield, S. P. 1988. "Corrosion of Reactor Grade Uranium in Aqueous Solutions Relevant to Storage and Transport." *Nucl. Energy*, 27, 91-98.

WHC. 1994. *A Model for Predicting Respirable Reelases from Pressurized Leaks*. WHC-SD-GN-SWD-20007, Rev 0. Westinghouse Hanford Co., Richland, Washington.

WHC. 1995. *Initial Hazard Categorization for the Hanford Site Tank Farms*. WHC-SD-WM-HC-016, REV 0. Westinghouse Hanford Co., Richland, Washington.

WHC. 1996a. *Safety Analysis Manual*. WHC-CM-4-46, Rev 4. Westinghouse Hanford Company, Richland, Washington.

WHC. 1996b. *Tank Waste Compositions and Atmospheric Dispersion Coefficients for Use in Safety Analysis Consequence Assessments*. WHC-SD-WM-SARR-016, Rev 2. Westinghouse Hanford Company, Richland, Washington.

WHC. 1996c. *Toxic Chemical Considerations for Tank Farm Releases*. WHC-SD-WM-SARR-011, Rev 2. Westinghouse Hanford Company, Richland, Washington.

WHC. 1996d. *A Safety Assessment for Salt Well Jet Pumping Operations in Tank 241-A-101: Hanford Site, Richland, Washington*. WHC-SD-WM-SAD-036. Westinghouse Hanford Company, Richland, Washington.

WHC. 1996e. *Probabilistic Seismic Hazard Analysis, DOE Hanford Site, Washington*. WHC-SD-W236A-TI-002, Rev. 1. Prepared by Geomatrix Consultants for Westinghouse Hanford Company, Richland, Washington.

WHC. 1996f. *Flammable Gas Deflagration Consequence Calculations for the Tank Waste Remediation System Basis for Interim Operation*. WHC-SD-WM-CN-055, Rev. 1. Westinghouse Hanford Company, Richland, Washington.

WSDOH. 1993. "Response Procedures for Radiation Emergencies," Appendix A of *Protective Action Guides*. Washington State Department of Health, Olympia, Washington.

Whyatt, G. A., et al. 1996. *The Potential For Criticality in Hanford Tanks Resulting from Retrieval of Waste*. PNNL-11304. Pacific Northwest Natiuonal Laboratory, Richland, Washington.