TART

0027219

ENGINEERING CHANGE NOTICE

Page 1 of 2

1. ECN 196005

Proj. ECN

2. ECN Category (mark one)	3. Originator's Name, Organization, MSIN, and Telephone No.		4. Date
Supplemental []	S. A. Driggers, 200 Area Remediation Section, H6-04, 2-3493		March 12, 1993
Direct Revision [X]			
Change ECN []			
Temporary []	5. Project Title/No./Work Order No.	6. Bldg./Sys./Fac. No.	7. Impact Level
Standby []	200W Area Carbon Tetrachloride ERA	NA	3QS
Supersedure []			
Cancel/Void []	8. Document Numbers Changed by this ECN (includes sheet no. and rev.)	9. Related ECN No(s).	10. Related PO No.
	WHC-SD-EN-TI-010, Rev.0-C	See below #12.	NA

11a. Modification Work	11b. Work Package No.	11c. Modification Work Complete	11d. Restored to Original Condition (Temp. or Standby ECN only)
[] Yes (fill out Blk. 11b)	NA	NA	NA
[X] No (NA Blks. 11b, 11c, 11d)		Cog. Engineer Signature & Date	Cog. Engineer Signature & Date

12. Description of Change

Document was revised to reflect vapor extraction operations at the 216-Z-9 disposal site. Affected ECNs include 169781, 169782, 163914, 174152, 158305, and 186768.

9312903028

APR 1993 RECEIVED EDMC

13a. Justification (mark one)							
	Criteria Change	[X]	Design Improvement	[]	Environmental	[]	
As-Found	[]	Facilitate Const.	[]	Const. Error/Omission	[]	Design Error/Omission	[]

13b. Justification Details

The changes were required to support expanded operations of the ERA.

14. Distribution (include name, MSIN, and no. of copies)

RT Coffman	N3-05 (1)	RC Havenor	N3-06 (1)
SA Driggers	H6-04 (1)	RL Hand	H4-16 (1)
JD Fancher	N3-05 (1)	DB Tullis	L6-07 (1)
JN Fisler	H6-04 (1)	BG Tuttle	N3-06 (1)
SJ Gale	N3-05 (1)	EJ Millikin	H6-04 (1)
JW Green	H6-04 (1)	VJ Rohay	H6-06 (1)
EDMC	H6-08 (2)	~~IRA Clearance~~	~~H4-17 (1)~~

RELEASE STAMP

OFFICIAL RELEASE BY WHC (11)

DATE MAR 30 1993

Station # 12

ENGINEERING CHANGE NOTICE

1. ECN (use no. from pg. 1): 196005

15. Design Verification Required	16. Cost Impact				17. Schedule Impact (days)	
	ENGINEERING		CONSTRUCTION			
[] Yes	Additional	[NA] $	Additional	[NA] $	Improvement	[NA]
[X] No	Savings	[NA] $	Savings	[NA] $	Delay	[NA]

18. Change Impact Review: Indicate the related documents (other than the engineering documents identified on Side 1) that will be affected by the change described in Block 12. Enter the affected document number in Block 19.

SDD/DD	[]	Seismic/Stress Analysis	[]	Tank Calibration Manual	[]
Functional Design Criteria	[]	Stress/Design Report	[]	Health Physics Procedure	[]
Operating Specification	[]	Interface Control Drawing	[]	Spares Multiple Unit Listing	[]
Criticality Specification	[]	Calibration Procedure	[]	Test Procedures/Specification	[]
Conceptual Design Report	[]	Installation Procedure	[]	Component Index	[]
Equipment Spec.	[]	Maintenance Procedure	[]	ASME Coded Item	[]
Const. Spec.	[]	Engineering Procedure	[]	Human Factor Consideration	[]
Procurement Spec.	[]	Operating Instruction	[]	Computer Software	[]
Vendor Information	[]	Operating Procedure	[]	Electric Circuit Schedule	[]
OM Manual	[]	Operational Safety Requirement	[]	ICRS Procedure	[]
FSAR/SAR	[]	IEFD Drawing	[]	Process Control Manual/Plan	[]
Safety Equipment List	[]	Cell Arrangement Drawing	[]	Process Flow Chart	[]
Radiation Work Permit	[]	Essential Material Specification	[]	Purchase Requisition	[]
Environmental Impact Statement	[] NA	Fac. Proc. Samp. Schedule	[]		[]
Environmental Report	[]	Inspection Plan	[]		[]
Environmental Permit	[]	Inventory Adjustment Request	[]		[]

19. Other Affected Documents: (NOTE: Documents listed below will not be revised by this ECN.) Signatures below indicate that the signing organization has been notified of other affected documents listed below.

Document Number/Revision	Document Number/Revision	Document Number Revision
~~WHC-SD-EN-TI-010, Rev.0~~		

20. Approvals

Signature	Date	Signature	Date
OPERATIONS AND ENGINEERING		ARCHITECT-ENGINEER	
Cog Engineer SA Driggers SA Driggers	3-19-93	PE	
Cog. Mgr. MC Hagood MC Hagood	3-19-93	QA	
QA RL Hand RL Hand	3/25/93	Safety	
Safety DB Tullis D.B. Tullis ARF	3-25-93	Design	
Security		Environ.	
Environ.		Other	
Projects/Programs			
Tank Waste Remediation System			
Facilities Operations DJ Moak DJ Moak for DJ Moak	3/25/93	DEPARTMENT OF ENERGY	
Restoration & Remediation		Signature or Letter No.	
Operations & Support Services			
IRM		ADDITIONAL	
Other			

9312903028 6

SUPPORTING DOCUMENT

1. Total Pages 83

2. Title

Design, Operation, and Monitoring of the Vapor Extraction System at the 216-Z-1A Tile Field

3. Number

WHC-SD-EN-TI-010

4. Rev No.

1

5. Key Words

Vapor extraction, carbon tetrachloride, volatile organic compounds, radiologically contaminated soils, soil remediation, soil gas, vacuum vapor extraction, HEPA filtration, expedited response action

6. Author

Name: SA Driggers

Signature: SA Driggers

Organization/Charge Code 81352/P121A

APPROVED FOR PUBLIC RELEASE 3/29/93 N. Solis

7. Abstract

This document describes the design, operation, and maintenance to be performed on the vapor extraction system(s) used in the carbon tetrachloride ERA.

8. PURPOSE AND USE OF DOCUMENT - This document was prepared for use within the U.S. Department of Energy and its contractors. It is to be used only to perform, direct, or integrate work under U.S. Department of Energy contracts. This document is not approved for public release until reviewed.

PATENT STATUS - This document copy, since it is transmitted in advance of patent clearance, is made available in confidence solely for use in performance of work under contracts with the U.S. Department of Energy. This document is not to be published nor its contents otherwise disseminated or used for purposes other than specified above before patent approval for such release or use has been secured, upon request, from the Patent Counsel, U.S. Department of Energy Field Office, Richland, WA.

DISCLAIMER - This report was prepared as an account of work sponsored by an agency of the United States Government. Neither the United States Government nor any agency thereof, nor any of their employees, nor any of their contractors, subcontractors or their employees, makes any warranty, express or implied, or assumes any legal liability or responsibility for the accuracy, completeness, or any third party's use or the results of such use of any information, apparatus, product, or process disclosed, or represents that its use would not infringe privately owned rights. Reference herein to any specific commercial product, process, or service by trade name, trademark, manufacturer, or otherwise, does not necessarily constitute or imply its endorsement, recommendation, or favoring by the United States Government or any agency thereof or its contractors or subcontractors. The views and opinions of authors expressed herein do not necessarily state or reflect those of the United States Government or any agency thereof.

9. Impact Level 3QS

10. RELEASE STAMP

OFFICIAL RELEASE BY WHC

DATE MAR 30 1993

Station # 12

RECORD OF REVISION	(1) Document Number WHC-SD-EN-TI-010, Rev.1	Page 1

(2) Title

Design, Operations, and Monitoring of the Vapor Extraction System at the 216-Z-1A Tile Field

CHANGE CONTROL RECORD

(3) Revision	(4) Description of Change - Replace, Add, and Delete Pages	Authorized for Release (5) Cog. Engr.	(6) Cog. Mgr. Date
0	(7) Initial release per EDT133115	JW Green	WL Johnson 1/17/92
0-A	Minor general revisions to reflect conditions that have changed since initiation of operations. Incorporated per ECN 169781.	JW Green	WL Johnson 4/21/92
0-B	Revised document to add provisions for extracting from the Z-18 Crib. Incorporated per ECN 169782.	JW Green	WL Johnson 5/1/92
0-C	Revised document in response to audit. Incorporated per ECN 186768.	JD Fancher	WH Price 9/30/92
163914	Revised document to reflect operational configuration changes. Incorporated per ECN 163914.	SA Driggers	MC Hagood 1/26/93
174152	Revised document to reflect operational configuration changes. Incorporated per ECN 174152.	JN Fisler	MC Hagood 1/26/93
158305	Revised document to reflect operational configuration changes. Incorporated per ECN 158305.	JN Fisler	MC Hagood 1/26/93
1 RS	Revised document to reflect expanded operations at the 216-Z-9 disposal site. Incorporated per ECN 196005.	SA Driggers	MC Hagood 3/19/93

CONTENTS

1.0 INTRODUCTION 1-1
1.1 PURPOSE 1-1
1.2 BACKGROUND 1-1
1.2.1 200 West Area ERA 1-1
1.2.2 Volatile Oranic Compounds - Arid Integrated Demonstration 1-1
1.3 REGULATORY COMPLIANCE 1-2
1.4 SUMMARY OF SOIL PHYSICAL AND CONTAMINANT CHARACTERISTICS 1-2
1.5 SCOPE 1-6

2.0 VAPOR EXTRACTION SYSTEM DESIGN 2-1
2.1 BACKGROUND 2-1
2.2 GENERAL DESIGN REQUIREMENTS 2-2
2.2.1 SAD Requirements 2-2
2.2.2 ARAR Requirements 2-3
2.3 SYSTEM DESIGN 2-3
2.3.1 Site 2-3
2.3.2 Well Field 2-3
2.3.3 Vapor Extraction System 2-8
2.3.4 Collection/Treatment System 2-11
2.3.5 Process Control System 2-11
2.3.6 Office Trailer 2-14
2.4 SAFETY REQUIREMENTS 2-14

3.0 OPERATIONS AND MAINTENANCE 3-1
3.1 VES SYSTEM OPERATION 3-1
3.1.1 Operation Control 3-1
3.1.2 System Startup 3-1
3.1.3 Normal Operation 3-2
3.1.4 Short Term Shutdown 3-4
3.1.5 Long Term Shutdown 3-4
3.1.6 Extraction Plan 3-5
3.2 SYSTEM MAINTENANCE 3-6
3.2.1 Routine Maintenance 3-6
3.2.2 Instrument Calibrations 3-6
3.2.3 Preventive Maintenance 3-7
3.2.4 Spare Parts List and Site Inventory Requirements . . 3-7

4.0 VES OPERATIONS MONITORING 4-1
4.1 INSTRUMENTATION 4-1
4.2 VAPOR STREAM 4-1
4.2.1 Carbon Tetrachloride 4-2
4.2.2 Other Chemical Constituents 4-2
4.2.3 Radon 4-2
4.2.4 Particulate Radionuclides 4-2
4.3 EXTRACTION WELLS 4-3
4.4 GAC CANISTER LOADING 4-3
4.4.1 Manual Sampling Mode 4-3
4.4.2 Automated Sampling Mode 4-3
4.4.3 Trending 4-4
4.5 EFFLUENT DISCHARGE 4-4

CONTENTS (Cont)

4.6 LIQUID 4-4
4.7 ANALYSIS 4-4
4.8 PHYSICAL PARAMETERS 4-4

5.0 DOCUMENTATION AND RECORDS 5-1
5.1 FIELD LOGBOOK 5-1
5.2 COMPUTER-GENERATED DATA 5-1
5.3 PROJECT FILES 5-1

6.0 REPORTING 6-1

7.0 SCHEDULE 7-1

8.0 REFERENCES 8-1

APPENDIXES:

A. DESIGN DRAWINGS A-1
B. HEALTH AND SAFETY PLAN B-1
C. PROJECT MANAGEMENT PLAN C-1

FIGURES:

1-1 Site Map of 200 West Area 1-5
2-1 Available Wells Around the Three Disposal Sites - Modified Configuration 2-5
2-2 Typical Extraction Well Construction 2-6
2-3 Typical Monitoring Well Construction 2-7
7-1 Schedule for VES Operations 7-2

TABLES:

1-1 Regulatory Requirements 1-3
1-2 Applicable Regulations and Procedures 1-4
2-1 Safety Alarms and Equipment List 2-12

1.0 INTRODUCTION

1.1 PURPOSE

This document describes the design, operations, and maintenance of the Vapor Extraction System (VES) to be used in the 200 West Area Carbon Tetrachloride Expedited Response Action (ERA). The VES is designed to extract and capture carbon tetrachloride from the vadose zone soils beneath, and in the vicinity of, three past waste disposal sites that are contaminated with carbon tetrachloride. Remediation of the soils is being conducted as part of the ERA, which is a removal action under Comprehensive Environmental Response, Compensation, and Liability Act (CERCLA) of 1980.

1.2 BACKGROUND

1.2.1 200 West Area ERA

The 200 West Area carbon tetrachloride ERA is being conducted by the U.S. Department of Energy (DOE) at the direction of the U.S. Environmental Protection Agency (EPA) and the Washington Department of Ecology (Ecology) as a provision included in CERCLA. An ERA allows expedited responses to be taken at waste sites where early remediation will abate imminent hazards or prevent significantly increased degradation that might occur if action were delayed until completion of a remedial investigation/feasibility study (RI/FS) and record of decision. The ERA is being initiated based on concerns that the carbon tetrachloride residing in the soils underlying the 200 West Area is continuing to serve as a source of contamination to the ground water. Thus, the purpose of the ERA is to minimize contaminant migration within the vadose zone soils in the 200 West Area by removing carbon tetrachloride.

Based on results of a VES pilot test conducted in the spring of 1991 and an engineering evaluation/cost analysis (EE/CA), the EPA issued an action memorandum directing the initiation of the first phase of soil vapor extraction in the 200 West Area. Phase I calls for the initial VES to operate at the 216-Z-1A Tile Field and the 216-Z-18 Crib, and a second VES unit operating at the 216-Z-9 Trench. Phase II calls for production mode operation of two to three VES units to quantitatively remove the carbon tetrachloride from the soil at all three past waste disposal sites (Z-1A, Z-18, and Z-9). The proposed action for removing the carbon tetrachloride in the vadose zone soils is to use soil vapor extraction with aboveground treatment by adsorbing the carbon tetrachloride on granular-activated carbon (GAC), using a network of soil vapor extraction vadose wells. The GAC will be sent offsite to be regenerated and carbon tetrachloride destroyed.

1.2.2 Volatile Organic Compounds - Arid Integrated Demonstration

Another supporting activity that affects the design and operation of the VES is components of the Volatile Organic Compounds - Arid Integrated Demonstration (VOC-Arid ID). The VOC-Arid ID is one of several DOE integrated demonstrations designed to support the testing of emerging environmental management and restoration technologies. The principal objective of the VOC-Arid ID at the Hanford Site is to determine the viability of emerging technologies

that can be used to remediate arid or semiarid sites containing VOC (e.g., carbon tetrachloride) with or without associated metal and radionuclide contamination. During the first few years, the VOC-Arid ID activities will focus primarily on the carbon tetrachloride contamination and associated contaminants found in the 200 West Area.

1.3 REGULATORY COMPLIANCE

The operations will be conducted per various State and Federal regulations, the National Environmental Policy Act (NEPA), and various DOE orders. Environmental regulations considered potentially applicable are listed in Table 1-1. Several primary DOE orders, Westinghouse Hanford procedures, American National Standards Institute (ANSI), and U.S. Nuclear Regulatory Commision (NRC) regulations that may apply are listed in Table 1-2.

Before implementation, an environmental assessment (EA) was written to comply with NEPA. The EA was included in the *Expedited Response Action Proposal for the 200 West Area Carbon Tetrachloride Plume* (DOE-RL 1991). A finding of no significant impact was issued by DOE Headquarters for the ERA.

1.4 SUMMARY OF SOIL PHYSICAL AND CONTAMINANT CHARACTERISTICS

The upper geologic unit of the 200 West Area consists of two facies: (1) coarse-grained sand and granule to boulder gravel from which matrix is commonly lacking, and (2) fine- to coarse-grained sand and silt that commonly display normally graded rhythmites a few centimeters to several decimeters thick. In general, this unit is composed of approximately 50% sands and gravels, 45% cobbles, and 5% boulders and, in the 200 West Area, ranges in thickness from 6 to >60 m. It is underlain by 1.5 to 18 m of silts and fine sands, which are underlain by another gravel unit.

Carbon tetrachloride vapor concentrations observed throughout the 200 West Area in 1991 range from less than detectable to several thousand parts per million by volume in the vadose zone. Observed concentrations are highest in the vicinity, and west of, the three sites (216-Z-9 Trench, 216-Z-1A Tile Field, and 216-Z-18 Crib) where the carbon tetrachloride was discharged to the soil column (Figure 1-1).

Carbon tetrachloride breakdown products, chloroform and methylene chloride, also have been observed in soil samples in trace amounts. Other substances that have been identified in trace amounts in at least one soil sample from the 200 West Area include: a benzene; fluoromethane; 1,1-dichloroethylene; trans-1,2-dichloroethylene; trichlorofluormethane; methyl isobutyl ketone; and toluene (DOE-RL 1991).

Many of the liquid waste streams discharged to the soil column in the 200 West Area since 1944 have contained radionuclides. For example, the primary radionuclide components of the aqueous and organic liquids discharged to the three carbon tetrachloride disposal sites were plutonium and americium. The plutonium contamination extends approximately 30 m beneath the 216-Z-1A Tile Field; the lateral spread is limited within a 9-m-wide zone around the perimeter of the tile field.

9 3 1 2 9 0 3 0 2 9 2

Table 1-1. Regulatory Requirements

Regulation	Applicable	Comments
WAC 246-247 (formerly WAC 402-80) (RAEP)	Yes	If radionuclides are extracted during the test, pre-operational notification to DOH is required.
40 CFR 61 (NESHAPs)	No	Applicable only if extracted radionuclides result in a dose of 0.1 mrem or greater, using 40 CFR 61, Appendix D methodology.
WAC 173-400 (PSD)	No	Unless emitting large quantities of carbon tetrachloride (more than 40 tons/yr).
40 CFR 264-265, Subpart AA and BB (RCRA Organic Air)	Possible	CERCLA actions of this type are specifically excluded from permitting, but compliance may be required.
40 CFR 264, Subpart O Incinerators	Yes	99.99% conversion efficiency of carbon tetrachloride in thermal units <4 lb/h HCl in emissions.
State TAP Regulations WAC 173-460	Yes	ASIL for carbon tetrachloride is 0.067 $\mu g/m^3$ (annual average) ASIL for HCl is 23.3 $\mu g/m^3$ (24-h average)
CERCLA Reportable Quantities (40 CFR 302)	Yes	Reportable quantities are over 4.5 kg carbon tetrachloride/day/disposal site and 2,270 kg HCl/day/disposal site.
WAC 173-160	Yes	Well construction standards.

ASIL = Acceptable Source Impact Level
CCl_4 = Carbon Tetrachloride
DOH = Washington Department of Health.
HCl = Hydrochloric Acid
NESHAPs = National Emissions Standards for Hazardous Air Pollutants
PSD = Prevention of Significant Deterioration
RAEP = Radiological Airborne Emission Program
TAP = Toxic Air Pollutants
T-BACT = Best Available Control Technology for Toxics

Table 1-2. Applicable Regulations and Procedures

Regulations and Procedures	Title
ANSI N13.6	Practice for Occupational Radiation Exposure Records Systems
ANSI N42.18-1980	Specification and Performance of Onsite Instrumentation for Continuously Monitoring Radioactivity in Effluents
ANSI N323-1978	Radiation Protection Instrumentation Testing and Calibration
DOE Memorandum	W.A. Vaughn, August 5, 1986, Radiation Standards for Protection of the Public in the Vicinity of DOE Facilities
DOE Order 5400.1	Guide Environmental Protection Program
DOE Order 5400.5	Radiation Protection of the Public and the Environment
Draft DOE Order 5400.xx	Radiation Protection of the Public and Environment
Draft DOE Order 5400.xy	Radiological Effluent Monitoring and Environmental Surveillance
DOE Order 5480.10	Contractor Industrial Hygiene Program
DOE Order 5480.4	Environmental Protection, Safety, and Health Protection Standards
DOE Order 5480.11	Radiation Protection for Occupational Workers
DOE Order 5484.1	Environmental Protection, Safety, and Health Protection Information Reporting Requirements
DOE Order 5820.2A	Radioactive Waste Management
DOE Order 6430.1	General Design Criteria
DOE/EP - 0096	A Guide for Effluent Radiological Measurements at DOE Installations
DOE-RL, March 1987	Plan and Schedule to Discontinue Disposal of Contaminated Liquids into the Soil Column at the Hanford Site
DOE-RL	Implementation Plan for Hanford Site Compliance to DOE Order 5820.2, Radioactive Waste Management, August 1986
DOE-RL-89-18	Environmental Protection Implementation Plan
DOE-RL Order 5480.11A	Requirements for Radiation Protection
DOE-RL Order 5484.1	Effluent and Environmental Monitoring Program Requirements, Chapter III
NRC	Title 10, Code of Federal Regulations, Part 20, Standards for Protection Against Radiation
WHC-CM-1-1 (WHC 1987b)	Management Policies
WHC-CM-1-3 (WHC 1988f)	Management Requirements and Procedures Manual
WHC-CM-2-1 (WHC 1988l)	Procurement Manual
WHC-CM-2-14 (WHC 1988d)	Hazardous Material Packaging and Shipping
WHC-CM-4-1 (WHC 1988l)	WHC Emergency Plan
WHC-CM-4-3 (WHC 1987a)	Industrial Safety Manual, Volumes 1 and 4
WHC-CM-4-11 (WHC 1988a)	ALARA Program
WHC-CM-5-10 (WHC 1988j)	Radiation Protection
WHC-CM-5-16 (WHC 1988e)	Hazardous Waste Management
WHC-CM-7-4 (WHC 1988g)	Operational Environmental Monitoring
WHC-CM-7-5 (WHC 1988c)	Environmental Compliance
WHC-CM-7-6 (WHC 1991a)	Environmental Compliance Verification Manual
WHC-CM-8-6 (WHC 1988k)	Site Support
WHC-CM-8-7 (WHC 1988h)	Operations Support Services
WHC-EP-0137 (WHC 1988b)	Best Available Technology (BAT) Guidance document for the Hanford Site

9312903029 4

Figure 1-1. Site Map of 200 West Area.

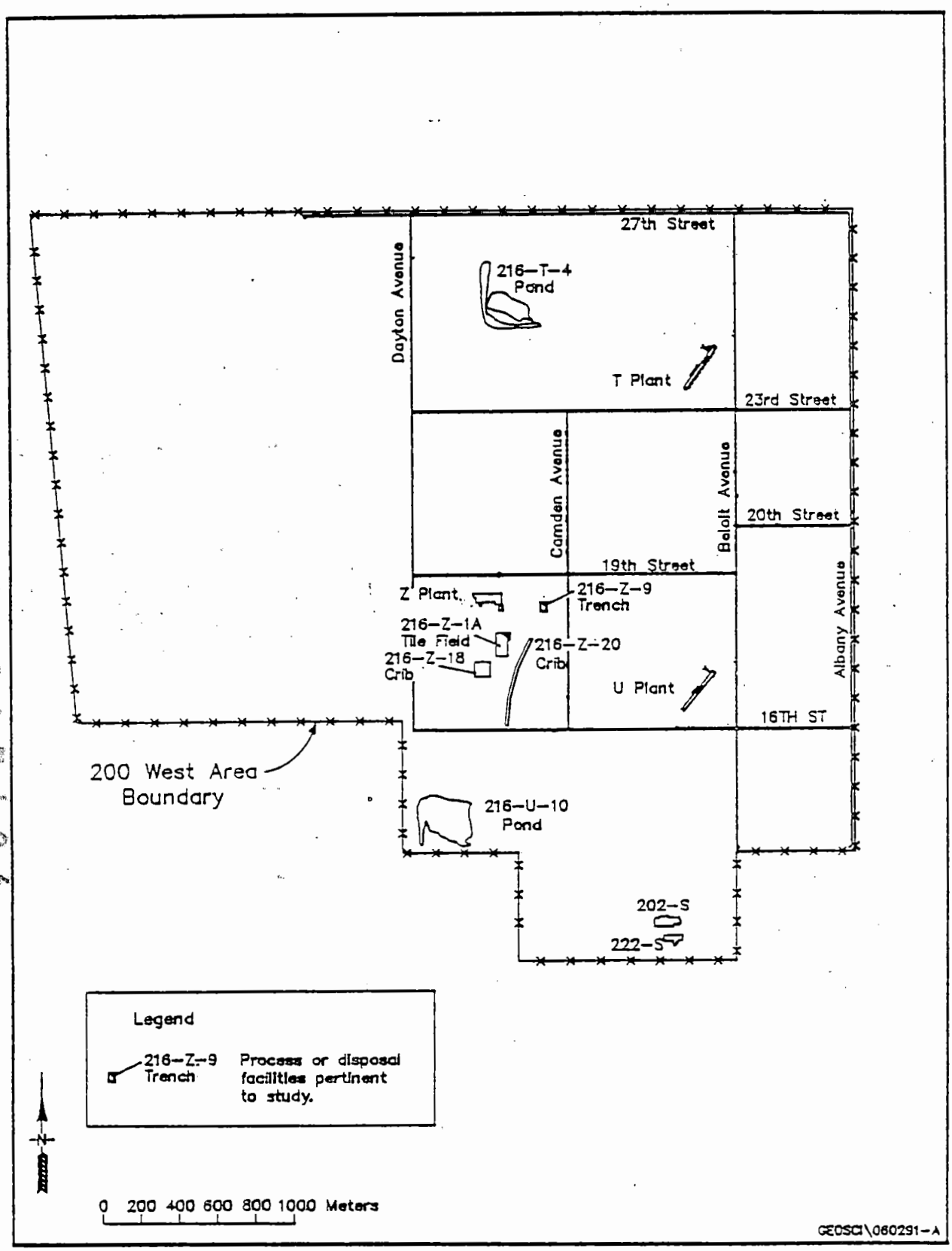

93129030295

Other radionuclides, such as radioactive isotopes of cesium, cobalt, hydrogen, iodine, strontium, and technitium, have been discharged to the soil column beneath the 200 West Area. In addition, radon gas occurs naturally in Hanford soils.

1.5 SCOPE

The requirements contained within this document are applicable to all VESs that will be utilized in the 200 West Area Carbon Tetrachloride ERA. These requirements are not applicable to other VESs that may be operated in support of other remediation activities.

9312903029 6

2.0 VAPOR EXTRACTION SYSTEM DESIGN

Soil vapor extraction is a physical means of removing VOC from contaminated soil. The typical system consists of a network of vacuum extraction wells screened in the contaminated zone. The extraction wells are joined together by a common header pipe, which is connected to a water separator for water removal. The water separator is connected to a vacuum blower, which provides a negative pressure gradient in the subsurface. The negative pressure created in the subsurface vaporizes VOC's with high vapor pressures (e.g., carbon tetrachloride) and allows for the pulling of VOC-laden soil gasses through the subsurface into the extraction wells and through the VES unit by the vacuum blower. Discharge from the blower is then vented directly to the atmosphere or directed to an offgas treatment system, depending on air emission requirements and the nature and extent of VOC contamination.

2.1 BACKGROUND

In the spring of 1991, a soil vapor extraction characterization test was conducted using a VES at the 216-Z-1A Tile Field. The unit was trailer-mounted. The major components of the system included the intake manifold, water separator, prefilter, GAC canisters, blower, high-efficiency particulate air (HEPA) filters, exhaust stack, piping and instrumentation. The well field design included four wells used for extraction and observation. These four wells were W18-87, W18-150, W18-167, and W18-171, and each had perforated intervals at various depths.

The VES design for the characterization test went beyond the typical VES to address the potential for radionuclide particulates potentially brought up the extraction wells to contaminate the components of the VES. As a safety precaution, HEPA filters were added to the system. In addition, alpha and beta continuous air monitors (CAM) were added to the system. The process area of the VES was cordoned off as a radiologically controlled zone.

Test results indicated that no man-made radionuclides were pulled from the wells and into the system. However, naturally occurring radon and associated daughter products were found in the system. More information on the test results is provided by DOE-RL (1991).

The VES characterization unit functioned well during the test; however, several areas for improvement were identified that were to be incorporated into future system designs and upgrades and are listed as follows:

- HEPA filters need to be located further upstream, ahead of most of the equipment and instruments, to reduce the amount of equipment and instruments potentially exposed to radioactive contamination.
- Instrumentation should be better matched to the system (i.e., instrument detectors).
- Sampling ports need to be more accessible.
- Better lighting should be provided for nighttime activities.

- The VES should be more automated.
- The Data Acquisition System (DAS) should have greater information capacity and flexibility.

2.2 GENERAL DESIGN REQUIREMENTS

The general design requirements for all VES systems designed, purchased, leased, and/or upgraded in support of the ERA are as follows:

- Extract and collect carbon tetrachloride and associated organic vapors from three or more wells at one time, depending on site characteristics.
- Use mobile equipment.
- Be capable of 24 hours/day, 7 days/week operation.
- Operate in ambient temperature conditions ranging from -10°F to 110°F, wind speeds up to 100 mph, and up to 365 solar days per year.
- Allow sampling and monitoring of the extracted soil vapor to insure operations meet all environmental controls.
- Prevent or minimize contamination of the VES by man-made radionuclides.
- Meet regulatory and safety requirements.
- Provide a minimum of 500 ft^3/min of soil gas extraction and vacuum up to 10 inches of mercury (135.8 inches of water).
- Utilize a stack as the final effluent release point.
- Limit carbon tetrachloride effluent concentrations to a maximum of 25 ppm.

The general design requirements also include limits established by the safety assessment and by regulatory limits which are applicable or relevant and appropriate requirements (ARAR).

2.2.1 SAD Requirements

The VES design shall adhere to the requirements of the most current revision of the safety assessment document (SAD) (Lehrschall 1993).

2.2.2 ARAR Requirements

The general design requirements directed by ARAR include the following:

- Capable of keeping carbon tetrachloride levels at the fenceline (Hanford Site boundary) below the acceptable source impact level (ASIL) of 0.067 mg/m^3.

- Capable of keeping the carbon tetrachloride emissions below the reportable quantity (RQ) of 10 lbs/day.

2.3 SYSTEM DESIGN

2.3.1 Site

The VES site includes the area encompassing the well fields, the process trailers, the office trailer, and the GAC canisters. The site is usually situated near the source of the carbon tetrachloride contamination. This may be a crib, tile field, or other source, that may or may not be a radiologically controlled area. The VES process equipment is placed in close proximity to each other and is interconnected with hoses, electrical cables, and instrumentation cables. An exclusion zone will be cordoned off and posted around the area where this equipment is located to prevent inadvertent access by uninvolved individuals. Operations support trailers are maintained outside of the exclusion zone and may be connected to the VES process equipment via electrical cables and instrumentation cables.

The GAC canisters used for removal of the carbon tetrachloride from the soil gas are placed adjacent to the VES and are connected by flexible hoses. Separate staging areas are maintained for storage of new GAC canisters awaiting use, and for spent canisters loaded with carbon tetrachloride awaiting shipment to the carbon regeneration facility. The latter storage area is roped off as Radiation Control Zone because of potential radioactivity associated with radon and its daughter products which are also adsorbed on the GAC.

2.3.2 Well Field

Wells provide access to the soil vapor in the subsurface to maximize extraction of carbon tetrachloride and associated organics.

Well configurations provide ability to extract or monitor depending on the configuration. Perforations in casing must provide at least 3% open area in perforated intervals. Access to individual perforated intervals must be provided by packers or by piping. Changes to a well must not preclude future ability for closure to Washington Administrative Code standards and must not facilitate extraction of radionuclide particulates.

The wells in the 216-Z-1A Tile Field, the 216-Z-9 Trench, and the 216-Z-18 Crib provide the means for extracting carbon tetrachloride and associated VOC from the soil, and a means to monitor conditions in the well field, (i.e., vacuum, permeability to airflow, carbon tetrachloride plume migration, etc.). The existing wells that are available for Phase I and II

operations are shown in Figure 2-1. Wells denoted as extraction wells will be perforated and connected to the VES on a scheduled basis for extraction. Monitoring wells will be connected to the process control system of the VES to monitor conditions of the well field. Monitoring wells may be utilized as extraction wells, and extraction wells may be used as monitoring wells at the discretion of the project engineer or project scientist. The perforated intervals of the wells were chosen based on known stratigraphy and contamination levels in the wells.

2.3.2.1 Well Configuration. Configuration of the wellfield using existing wells for Phase I and II operations is shown in Figure 2-1. Preparations for Phase II operations will consist of perforating/configuring more extraction wells and reconfiguring some of the extraction wells used in Phase I.

A typical extraction well is shown in Figure 2-2. Extraction wells will contain up to four piezometer tubes, which will be used to extract/monitor from different intervals. Bentonite isolation seals and sand packing will isolate each extraction/monitoring interval.

A typical monitoring well construction is shown in Figure 2-3. The monitoring wells that have a single perforated interval have caps secured to form a vacuum-tight seal and the casing is used as the conduit to the perforated interval. In monitoring wells with multiple perforated intervals, packer systems are installed that allow monitoring of the individual intervals. There is no planned change to the design of the monitoring wells for the Phase II operations.

2.3.2.1 Well Perforations. The wells are perforated at selected intervals to provide a means of monitoring and extracting soil vapor from a specific soil depth in the subsurface. The intervals are determined by analysis of the characterization test data and known geological data. Pipes extending down the casings are screened in the same zone as the perforated interval.

The area of each individual perforation is about 2.8 in^2. There are typically 20 of these perforations per linear foot of casing. This provides an effective open area over the perforated interval of about 4% in the perforated interval of the 6-inch casing and 3% in an 8-inch casing.

2.3.2.3 Well Connections. Each extraction well has a cap. The caps have holders that secure the pipes that extend down the casing to the perforated intervals. An elastomer overlays the tops of these wells to prevent precipitation from entering the well. The caps connect every pipe screened in a perforated interval to a wellhead manifold via a flexible hose. During Phase I operations, a packer system is used in the extraction well and no cap is used.

2.3.2.4 Wellhead Manifold. The wellhead manifold has valves which allow flow control from each perforated interval. Wellhead instrumentation provides information on the vacuum of each interval. Each wellhead manifold is connected by a flexible transfer hose to the HEPA trailer manifold. During Phase I operations, the wellhead manifolds may not be used. A pressure transducer and pressure gage on the wellhead provide measurements of the extraction vacuums.

Figure 2-1. Available Existing Wells Around the Three Disposal Sites - Modified Configuration.

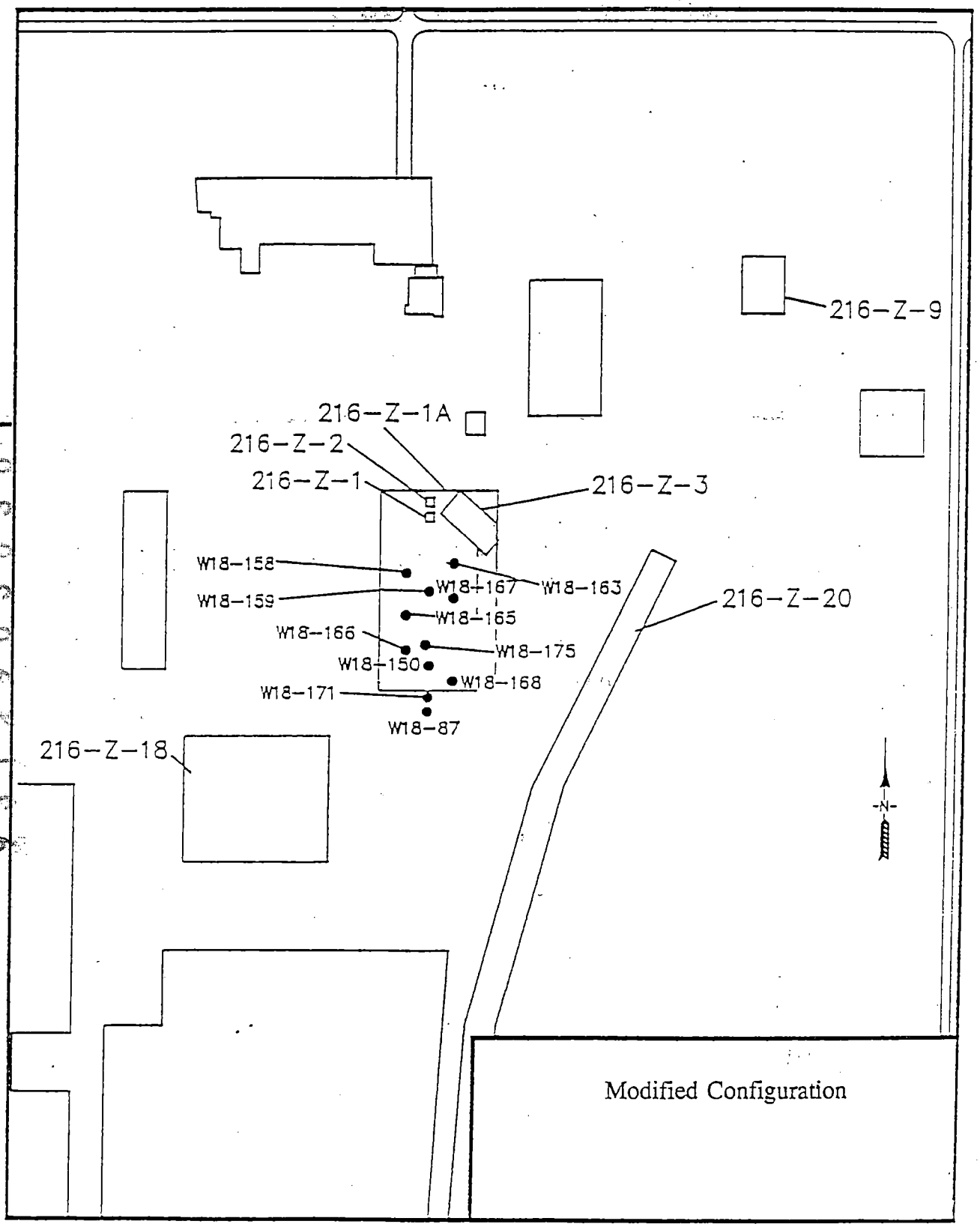

Figure 2-2. Typical Extraction Well Construction.

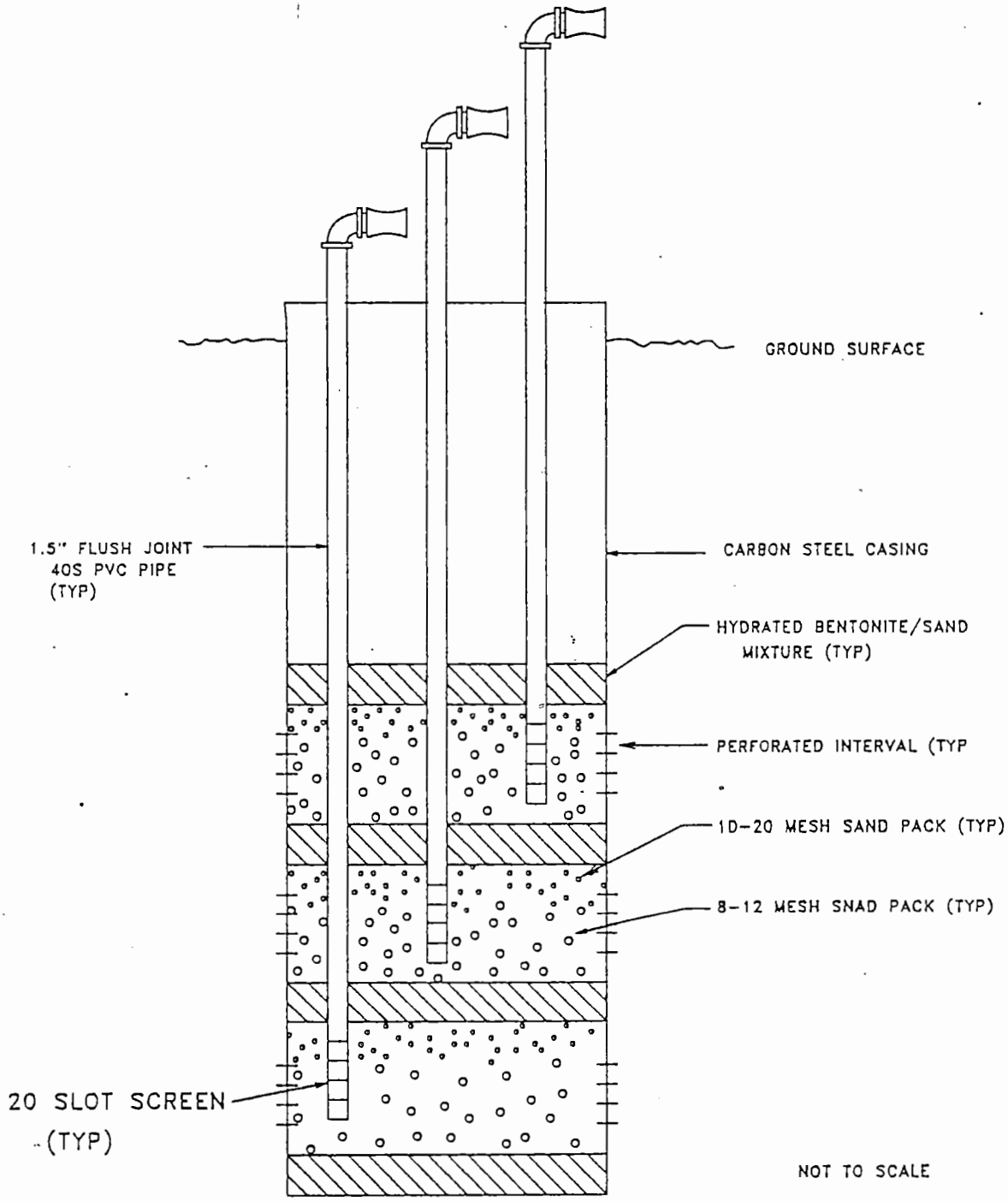

9 3 1 2 9 0 3 0 3 0 2

Figure 2-3. Typical Monitoring Well Construction.

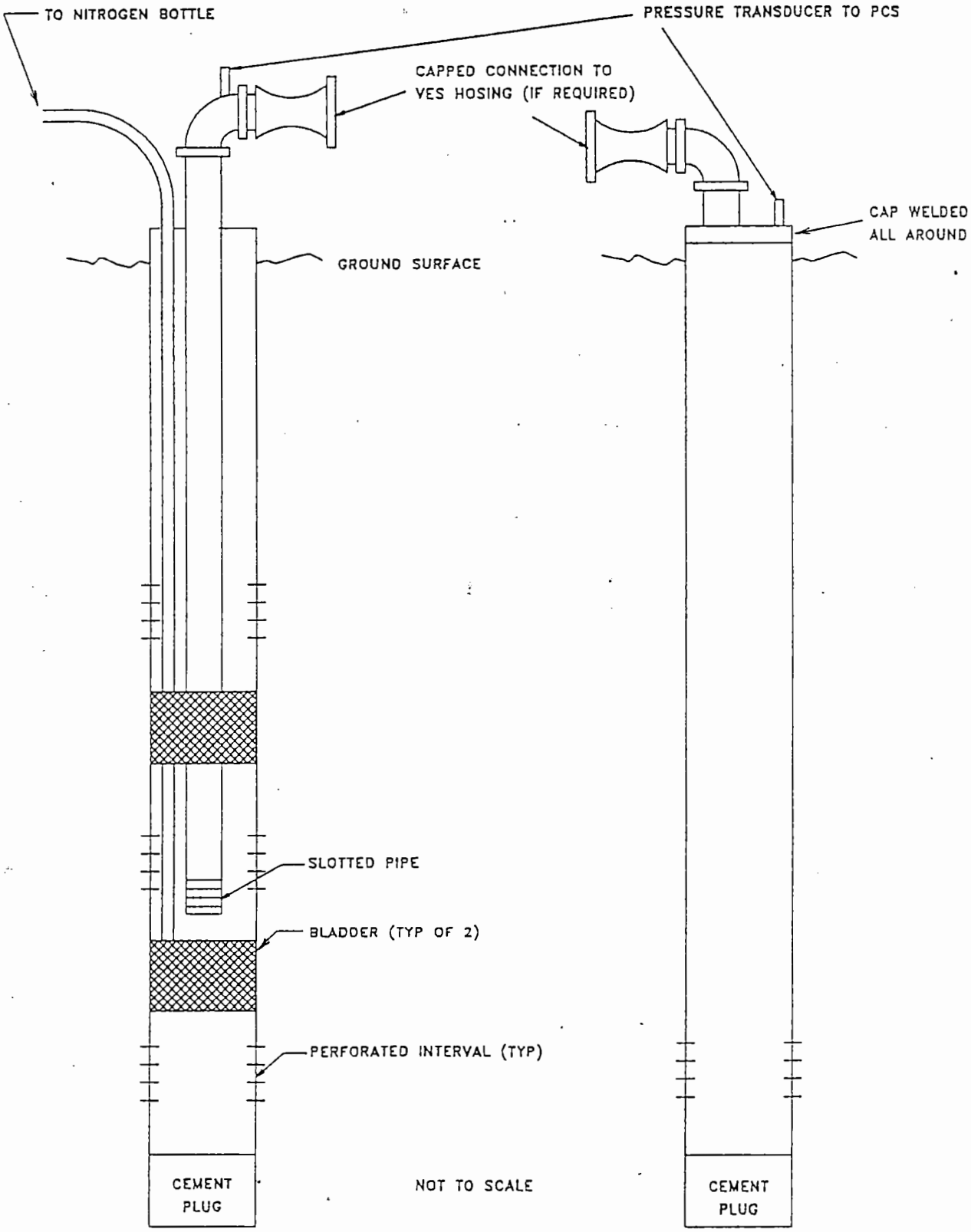

TYPICAL PACKER MONITORING WELL

TYPICAL SEALED MONITORING WELL

2.3.2.5 Well Field Hose and Hose Heaters. Transfer hoses running from the wellhead manifolds to the HEPA trailer manifolds may have one or more heaters installed to prevent vapor condensation in the lines during cold weather operation. The hoses lay on the ground and have positive seal quick disconnect fittings every 20 ft to provide ease of disconnection and movement when necessary. The hoses are staked or otherwise marked and are readily visible to personnel operating vehicles in the area.

2.3.3 Vapor Extraction System

The VES consists of an assortment of mobile units that are typically the following: a trailerable HEPA filtration unit (called the HEPA trailer), a trailerable blower unit with water separator (called the blower trailer), a wellfield intake manifold, a process control system, and a portable electric generator (if required). The general functions of the equipment is to create the vacuum necessary to extract the carbon tetrachloride laden soil gas from the well field, remove moisture and particulates from the soil gas, disburse it to a collection system to remove the carbon tetrachloride from the soil gas and then discharge the treated soil gas to the atmosphere. Design specifications and drawings of the vapor extraction sytems used in the ERA are included in Appendix A. The functions of the components that make up a typical VES are described below.

2.3.3.1 HEPA Trailer. The HEPA trailer provides a platform for mounting the inlet manifold, the HEPA filter, gas sampling cabinet(s), the electrical power distribution system and appurtenant equipment. The major function of the HEPA trailer is to remove potentially radioactive particulates from the soil gas prior to passing through the remaining equipment. A typical trailer consists of a 20 ft long by 8 ft wide steel frame bed with steel grated flooring, four wheels, and tongue. Components are mounted using unistrut and bolts. The trailer is leveled with levelling jacks installed on the trailer. The trailer is also electrically grounded with two sets of grounding rods.

2.2.3.2 Blower Trailer. The blower trailer essentially provides the prime mover for extracting the soil gas from the soil for distribution through the VES and out the exhaust stack. The equipment on the blower trailer serves two main purposes: (1) it provides the vacuum blower, which imparts a vacuum to the sub-surface soil which then provides the motive force for pulling the carbon tetrachloride-laden soil gas through the VES equipment; and (2) it provides for discharging the soil gas after treatment. Additionally, it can be used to reduce the moisture content of the soil gas before the soil gas passes through the HEPA filters.

2.2.3.3 Wellfield Intake Manifold. The wellfield intake manifold receives soil gas from the extraction well(s) via vapor type hose(s). The manifold combines the soil gas from all wells connected to the system. The soil gas flows through the HEPA filters for the removal of particulates then is transferred from the HEPA trailer to the blower trailer. The connections of the hoses to the manifold are made with seal-tight quick-disconnect fittings. Valves on the manifold provide control of the flow from each well.

The manifold is fitted with several instruments. Flow meters and vacuum transmitters are placed in each manifold inlet segment and pressure gages are installed to allow local indication of the pressure in each leg of the

9 3 1 2 9 0 3 0 3 0 4

manifold. A relative humidity transmitter and temperature transmitter is located in the header portion of the manifold. If moisture in the soil vapor is excessive, the soil vapor is then directed to a water separator.

2.2.3.4 HEPA Filtration Unit. The HEPA filtration unit removes particulates from the soil gas. The HEPA filter removes particulates from the soil-gas stream, and of particluar interest includes potentially radiologically contaminated particulates. The prefilter functions as a roughing filter to remove larger particulates. The HEPA filters are rated at 99.97% efficient for particles 0.3 μ or greater.

The HEPA filtration unit housing instrumentation includes differential pressure gages across each of the filter banks and may have alpha CAM and beta CAM to monitor for the presence of radionuclide contamination at the HEPA filters. The CAM have individual audiovisual alarms. The CAM may also have alarm interlocks connected to the process control system to shut down the VES in an alarm condition.

2.2.3.5 Soil Gas Sampling System. A soil-gas sampling system is available to sample the incoming well pipes on the intake mainfold and the inlet and outlet line to the HEPA filtration unit. The sampling system consists of a sampling cabinet, tubing to and from the cabinet, a sampling pump (if required), and sampling ports. The sampling cabinet provides a working space and weather protection for sampling activities. The sampling system tubing connects the sampling cabinet to the sampling ports. The tubing material is stainless steel and does not interfere with the sample quality. The tubing connections (fittings and valves) are located to provide access and control at all desired locations.

2.2.3.6 Electrical Service. All wiring and equipment is to meet or exceed the National Electric Code for NEMA 3R. All circuits should be clearly labeled in the panel box(es). All cables should be UL listed as type TC, sunlight resistant and approved for direct burial. All connectors should be Appleton style two-to-five wire, three-to-five pole, 600 VAC.

The electrical requirements for the central power distribution center that converts the electric power supplied by either a portable generator or line power are given in Appendix A (see one line diagram in the HEPA filtration system trailer drawing).

2.2.3.7 Instrumentation. VES instrumentation includes pressure gages, temperature gages, thermocouples, flow meters, carbon tetrachloride detectors, CAMs, and radon detectors. An air sampler is used to provide a record sample of the particulate radiation pulled from the soil. Sample ports provide a means of sampling the soil gas. All instrument transmitters connect to the process control system. All instruments, including transmitters, are to be individually labeled. Calibration, or indication only, stickers are attached as required for the location. The flow rate should be measured before and after the GAC collection system.

2.2.3.8 Piping and Transfer Hose. Piping is anchored so that no damage occurs during transportation and line vibration during VES operation. All valves are to be individually labeled and all piping uses national pipe thread. The piping is carbon steel and the hoses are wire reinforced with quick disconnect fittings.

Hoses are used to interconnect the various components of the VES. Hoses are used from the extraction wells to the intake mainfold, from the intake mainfold to the water separator, from the water separator to HEPA filtration unit, from the HEPA filtration unit to the blower, from the blower to the primary GAC canister, between GAC canisters, and finally to the exhaust stack.

2.2.3.9 Vacuum Blower. The blower creates the airflow and vacuum for the entire system. The blower is located on the blower trailer. It is the only moving part in the VES. By connecting the blower to the wells with hose, it is capable of pulling soil vapor from the subsurface of the well fields, through the HEPA filters, and through the blower. Then the blower pushes the soil vapor through the GAC canisters and discharges the treated effluent out the stack to the atmosphere. The blower should not exceed a noise level >85 dBA at the source.

2.2.3.10 Water Separator. Moisture, if present, will be adsorbed on the activated carbon in conjunction with radon, carbon tetrachloride, and other VOC of interest. As such, the water occupies space on the activated carbon thereby reducing its capacity for the VOC's of interest. Moisture also may wet the the HEPA filter media and subsequently cause a breech, reducing if not eliminating the effectiveness of the HEPA filters.

Moisture in the soil gas may be reduced with the use of a water separator. The water separator decreases the velocity of the vapor stream, thus allowing the free moisture to condense and collect in the tank. The water separator is used optionally, when it is determined that excessive moisture is present in the system.

The condensate collected in the tank is sampled, and disposed of per regulatory requirements. As this portion of the system is upstream from the HEPA filters, it is treated as a radiologically controlled zone.

2.2.3.11 Air Preheater. The air preheater is located in the HEPA filter housing, just upstream of the prefilter to increase the temperature of the vapor which effectively increases the dewpoint such that any moisture present will not condense and wet the HEPA filter media. Based on a safety assessment, there was a concern that the preheater could cause the production of phosgene gas when heating the carbon tetrachloride vapor at temperatures exceeding 400°F. Therefore, a thermostat will be used to limit the air tempeature to 350°F as a precautionary measure.

2.2.3.12 Exhaust Stack. The base inlet should be from 4 to 10 inches in diameter depending on the amount of flow that will be exhausted. The vertical portion of the stack is to be 20 feet tall as measured from the ground. The gas vent pipe should be constructed of steel. Carbon tetrachloride and alpha and beta radiation will be monitored at the stack.

2.2.3.13 Lighting. Each trailer of the VES has pole-mounted lights for nighttime use. Photo-cell controlled, extension floodlight towers are to provide lighting. Each tower will consist of two adjustable 3,200-lm lights. Low pressue sodium or incandescent lights are to be used. Light tower is to extend a minimum of 10 feet high.

9312903306

2.3.4 Collection/Treatment System

The collection/treatment system utilizes GAC to remove the organics from the soil gas stream. The SAD requires placing two GAC canisters (at a minimum) in series in a treatment train. The first canister functions as the primary treatment and the second functions as the polishing treatment. When the primary canister reaches its adsorptive capacity, as indicated by monitoring for carbon tetrachloride or radon break through, it is taken off-line for shipment to a regeneration vendor. It is replaced immediately by the secondary canister. A regenerated canister replaces the secondary canister. Additional GAC canisters may be placed in series provided that the system pressure is limited to 5 lb/in^2 measured just downstream of the vacuum blower.

The canisters hold 500 to 2,500 pounds of GAC and are rated for a design maximum of 650 ft^3/min flow, and a pressure of 5 lb/in^2 (maximum). The canisters are equipped with 6-inch threaded fittings to which quick-disconnect fittings are attached. The inlet and outlet of each canister are equipped with valves for sealing the canister during nonuse. The canisters shall be U.S. Department of Transportation approved for shipping. The carbon will be regenerated offsite until such time an onsite carbon tetrachloride treatement/destruction system is implemented.

2.3.5 Process Control System

The VES process control system is computer based and includes analytical and process instrumentation, process sensors and transmitters, alarm interlocks, and associated equipment. The control system provides mostly a monitoring function, with some control capabilities. Input to the process control system is provided by electronic transmitters and process or analytical instrumentation. Transmitters send electronic signals to the computer. This provides the process computer with inputs for system operational control, recording unplanned events (alarms), and system performance analysis.

The computer may be located in the office trailer or on the VES, and allows site personnel to access information from the transmitting instruments and make control changes. The major operational safety control limits and interlocks are established by the SAD and are shown in the Safety Equipment List (Table 2-1).

2.3.5.1 Radiation Inputs. Particulate radiation may be measured by CAM between the HEPA filter banks, or at the exhaust stack. These locations provide both process control and alarm interlock inputs. CAM alarms are set at a level to assure the detection of possible radioactive particulates that could be removed during remediation activities. The CAM have individual local audiovisual indication and are capable of transmitting alarms to the process control system to provide an alarm interlock. The alarm interlock system shuts down the VES in the event radiation level set points are exceeded. In addition to the CAM, an air sampler may be used to provide a record sample of any particulate radiation that might become entrained in the VES effluent.

Table 2-1. Safety Alarms and Equipment List.

Description	Location	Code
Alarm Interlocks:		
High Alpha or Beta	Blower outlet/stack	ER
High Carbon Tetrachloride	Exhaust Stack	EI
High Flow Differential	Blower outlet/stack	EI
High Temperature	Blower Exhaust	EI
High Radon	Last Canister/stack	EIR
High Pressure	Blower Outlet/canisters	EI
Equipment:		
Pressure Transmitter	Blower outlet/canisters	EI
Continuous Air Monitors	Blower outlet/stack	ER
Final Carbon Tetrachloride Monitor	Stack	EI
HEPA Filter Delta P Gages	HEPA filter housing	ER
Radon Detectors	Blower outlet/stack	IR
Shutdown Relays	Blower	EIR

KEY:
E = Environmental Protection
I = Industrial Safety
R = Radiation Protection

2.3.5.2 Carbon Tetrachloride Input. Soil vapor carbon tetrachloride concentration measurements are typically made before, between, and after the GAC canisters with a chlorohydracarbon/VOC monitor. The process control system may be used to monitor and record these measurements for compliance monitoring and system trend analysis. If the monitors are not connected to the process control system, a person familiar with the VES operation will monitor, and periodically record, the effluent carbon tetrachloride concentrations at these points, and will shut down the VES if a reading of >25 ppm at the final effluent release point is observed. This requirement is in accordance with the OSL requirements in the SAD. When the carbon tetrachloride effluent monitor at the final effluent release point is connected to the process control system, an alarm interlock automatically shuts down the VES when the carbon tetrachloride concentration exceeds 25 ppm.

2.3.5.3 Radon Detectors. Soil vapor radon measurements may be made with radon monitors before, between, and after the GAC canisters to indicate the total quantities of radon and daughter products adsorbed by the GAC during VES operation. The process control system may record these measurements for compliance monitoring and system trend analysis or the measurements may be manually read and recorded.

2.3.5.4 Temperature Inputs. Heater temperatures, process equipment temperatures, and soil-gas temperatures are monitored for operational control and safety compliance. Both thermometers and temperature sensors (thermocouples) are used to measure temperatures.

2.3.5.5 Pressure Inputs. The process vacuums may be measured at each well interval (depth) and on both sides of the HEPA filtration unit. The blower exhaust pressure is measured and barometric pressure measurement is used for well performance analysis. Vacuums vary widely at the well intervals and in the well hoses. Several gages are used to cover the broad vacuum range (0 to 150 inches of water). Electronic transmitters and pressure/vacuum gages are used to measure the pressures and vacuums.

2.3.5.6 Flow Input. Flow measurements are taken at three separate locations in the system. The first location is the intake manifold, which provides the flow rate from each well. The second location is the flow out of the vacuum blower, which gives the total flow from all the wells under extraction. The third location is just upstream of the exhaust stack, which also gives the total flow from all the wells under extraction. Electronic transmitters are used to transmit the flow information to the process control system. The flow rate as measured just after the blower and downstream of the final GAC canister is compared to monitor for effluent leakage from the portion of the unit under positive air pressure. This requirement is in accordance with the OSL requirements in the SAD. If a variance is experienced that is greater than 10% above the combined accuracy of the of the flow meters, an alarm interlock within the process control system will shut down the VES.

2.3.5.7 Relative Humidity Input. The relative humidity is measured upstream of the HEPA filter housing and is used to monitor and/or control the vapor stream dewpoint to prevent condensation.

2.3.5.8 Alarm Interlocks. The alarm interlocks allow the system to operate within established parameters without constant surveillance by site personnel. The alarm interlocks incude alarm set points, alarm response logic, annunciation and shutdown responses. VES shutdown consists of shutting the blower off. The alarm interlocks and responses are listed below. During the initial startup phase, not all of the alarm set points and alarm response logic will be used.

- If the carbon tetrachloride effluent levels at the final effluent release point exceeds 25 ppm, the system shuts down and alarms.
- If the flow meters located upstream of the primary GAC canister and downstream of the final GAC canister experience a differential >10% beyond the range of accuracy of each instrument, the system shuts down and alarms.
- If the relative humidity of the soil gas to the HEPA filter is above 98%, a High Relative Humidity/Dewpoint alarm annunciates.
- If the hose heater outlet is >225°F, the hose heater shuts off and alarms.
- If the blower exhaust temperature >275°F, a High Blower Outlet Temperature alarm annunciates.
- If the vacuum is above 10 inches of mercury, a High System Vacuum alarm annunciates.
- If the flow rate downstream of the blower >500 ft^3/min, a High System Flow Rate alarm annunciates.

- If the blower exhaust pressure >5 lb/in^2, a High Blower Outlet Pressure alarm annunciates.
- If the alpha CAM measures >1.602 log counts, a High Alpha alarm annunciates, and the system shuts down.
- If the beta CAM measures >3.69 log counts, a High Beta alarm annuciates, and the system shuts down.
- If the radon levels before or after the last GAC canister are above 4236 pCi/L, or 2 mR/hr, a High Radon alarm annunciates.

2.3.6 Office Trailer

The office trailer provides working space for the project support personnel at the site, storage space for some items, and may house the process control system. The office trailer also holds the site files. The office trailer is a standard single-wide trailer with heating and air conditioning. The trailer is blocked and tied down.

2.4 SAFETY REQUIREMENTS

Reasonable precautions are undertaken during VES installation and operation to protect the health and safety of all involved personnel. Standard radiation protection procedures are followed, and personnel will be protected to keep radiation exposure to as low as reasonably achievable (ALARA). The project support area is accessible only to authorized personnel and emergency vehicles. Emergency evacuation routes will not be obstructed. A zone around the process equipment will be maintained by rope to prevent inadvertent access by uninvolved individuals.

A health and safety plan is provided in Appendix B. A site-specific Hazardous Waste Operations Permit (200W-CCl_4-ERA-2) has been written and is readily available at each VES site.

This project is classified as Westinghouse Hanford Safety Class 3 to ensure the safety of site workers. It is designed to meet requirements of the National Electric Code (NEC), Occupational Safety and Health Administration (OSHA), Washington Administrative Code (WAC), applicable environmental regulations, and the SAD.

The safety equipment list (see Table 2-1) provides a list of safety systems and equipment requiring particular care, use, and maintenance attention to ensure safe carbon tetrachloride remediation operations.

3.0 OPERATIONS AND MAINTENANCE

3.1 VES SYSTEM OPERATION

The VES extracts soil vapors from the subsurface soil, filters any potential radionuclide particulates, removes carbon tetrachloride and associated VOC's from the soil vapor, and vents the treated effluent to the atmosphere. Additionally, operation of the VES includes sampling of the soil vapor at various stages in the process.

Following the initial testing and startup phase, the VES may be scheduled for continuous (24-hour) operation. However, the system may be operated at periods of less than 24 hours. It is intended to operate the VES in an unattended mode during the off-shifts (swing and graveyard), if possible. Periodic (daily or more frequent as deemed necessary) operational system checks of the VES will be performed. Personnel performing these inspections record the findings in the field logbook. Any operational changes (for example, flow or vacuum adjustments, or moving to alternate well locations) that are required, or changes necessary to the process control system are recorded in the field logbook.

Sampling needs are based on: (1) characterization of the soil vapor consituents coming from the wells to allow optimization of wellfield production (and carbon tetrachloride removal), (2) characterization of soil vapors passing through the VES for determining operating efficiencies and environmental compliance, and (3) characterization of the carbon tetrachloride in the environs and the impact of VES operations on them.

3.1.1 Operation Control

Operation control is accomplished by the process control system. The control system provides mostly a monitoring function, with some control capabilities. Alarm condition shutdown capability is the primary control function of the process control system.

Manual gages located on the VES provide local indication of flow, pressure (or vacuum) and temperature for manual control when the process control system is bypassed.

The alarm interlocks on the VES are controlled directly (directly wired) or are activated by the process control system. An interlocked shutdown of the VES consists of shutting the blower off. The alarm interlocks, shutdown points, and responses shall be implemented in the operation of the VES.

3.1.2 System Startup

A shutdown checklist will be completed prior to startup and will be maintained in the field files. Completion of the checklist will be documented in the field logbook.

The procedures for starting up the system are as follows:

1. Observe and note cause of alarm condition and respond accordingly, noting time and cause of alarm and response actions taken.

2. Walk through system and check and document that all components appear functional and are properly connected. If descrepant conditions are found, note in the field logbook, and correct before continuing.

3. Place all valves, including sample valves in system in fully closed position with the exception of the following:

   - Place valves routed from selected extraction well(s) in the fully open position

   - Place all valves downstream of the blower in the fully open position

   - Place valves routing flow through the water separator tank and HEPA filter housing in positions corresponding to current system operating configuration.

4. Start blower in bypass mode (process control system bypassed).

5. Allow system flows and pressures to stabilize and place system into normal operation (process control system operating).

6. Adjust valves on wellhead manifold(s), HEPA trailer intake manifold, ambient air inlet, and blower bypass (if provided) to establish desired flow rate and vacuum pressure.

7. Walk through system to observe proper functioning of components.

3.1.3 Normal Operation

Normal operation of the VES is controlled by the process control system and does not require fulltime support by an individual. It is not critical that the system operate constantly or that the system is brought back to an operating condition immediately following a shutdown. A daily walk-through of the system is performed by a technician during normal working days.

The purpose of this daily walkthrough is to note the proper functioning of the components and the process in general. If the system is shut down when the technician visits the site, the technician troubleshoots and brings the system back to an operating condition.

3.1.3.1 Daily Checklist. A daily walkthrough of the system is performed by a technician during normal working days. The technician will complete a daily checklist and the checklist will be maintained in the field files. Daily completion of the checklist will be documented in the field logbook.

3.1.3.2 GAC Changeout Procedure. The GAC canisters are stored at the site in three separate locations. These locations allow the proper handling, usage, and storage of the canisters and are as follows:

- Area 1 - This storage area is for GAC canisters that have been received, but have not been used since receipt.

- Area 2 - This area is the process treatment area where the GAC canisters are in actual use. GAC canisters brought into this area are placed in the secondary or tertiary position in the treatment train where it functions as a polishing step. These canisters will sequentually be moved up to the primary position in the treatment train where they will function as the primary adsorber of carbon tetrachloride from the vapor stream.

- Area 3 - This storage area is for GAC canister that have been used and are awaiting shipment from the site.

The GAC canisters require changeout for any reason, including:

- Primary GAC canister has reached its adsorptive capacity of carbon tetrachloride.

- Breakthrough of carbon tetrachloride in a concentration exceeding the established limit is noted by instrumentation between primary and secondary GAC canisters or downstream of secondary GAC canister.

- Radon level in primary GAC canister has exceeded established limit.

- Primary or secondary GAC canister has a physical defect that has become apparent.

On receipt, each of the GAC canisters shall be labeled with a serial number. The use of a GAC canister shall be made in the site logbook and shall include the assigned serial number.

Procedures for changeout of GAC canisters are detailed as follows:

1. System must be shut down before changeout of the GAC canisters may be performed. Typically, the system will be shut down by the process control system for one of the reasons noted above and a message corresponding to that reason will be provided on system computer. If system is not shut down and a GAC canister changeout is to be performed, shut down system by input to system computer.

2. Make a note on GAC canister near inlet hose with a permanent marker on primary and secondary GAC canisters of action being undertaken. This information should include the time and date of action and initials of person performing action. Input this information to the field logbook.

3. Close valves on inlet and outlet to primary and secondary GAC canisters. Disconnect fittings attached to GAC canisters. Attach caps to fittings.

4. Use forklift to move GAC canisters. Move primary GAC canister to Area 3. Then move secondary GAC canister into primary position. Then move an unused GAC canister from Area 1 into secondary canister position.

   NOTE: If a three GAC treatment train is used, the tertairy GAC may be moved into the secondary position and the unused GAC may be placed into the tertiary position. In either case, the secondary GAC should always be moved to the primary position.

5. Remove caps from fittings of new primary and secondary GAC canisters. Reconnect fittings to these GAC canisters (i.e., inlet to inlet and outlet to outlet). Open valves on GAC canisters.

6. Restart system according to startup procedure.

3.1.3.3 Response to System Shutdown. The process control system will shut down the system due to the functioning of alarm interlocks. Typically, a technician will arrive at the site and note that the system is shut down. The technician will then access the cause of shutdown via the system computer, correct the problem, and restart the system.

3.1.4 Short Term Shutdown

A short term system shutdown occurs as a result of an alarm condition in the process control system. The process control system shuts off the blower. No shutdown operations need to be performed by the technician for a short term shutdown.

3.1.5 Long Term Shutdown

A long term system shutdown occurs when the system will not be operated for more than 3 days. A shutdown checklist will be completed prior to shutdown and will be maintained in the field files. Completion of the checklist will be documented in the field logbook.

The following details the procedures to be performed by the technician for a long term shutdown.

1. Shut down system by shutting off the blower.

2. De-energize electrical equipment of system by placing main system disconnect in "OFF" position.

3. Drain water separation tank on blower trailer and dispose of water appropriately.

4. Place all valves in system in fully closed position.

5. Document reason for long term shutdown in project files.

3.1.6 Extraction Plan

The initial operations at a new extraction site may include vapor extraction characterization tests to determine the concentrations of organics that can be expected prior to full scale operations. These initial tests will also provide a baseline for monitoring the influence of VES operations on the wellfield.

3.1.6.1 Characterization. Soil-gas will be extracted and sampled at some of the extraction well and monitoring well intervals before full-scale extraction begins and after it ends to ensure sufficient extraction. The samples are taken to characterize the horizontal and vertical profiles of carbon tetrachloride and radon vapors within the vadose zone of the extraction site. Caution must be taken to avoid "smearing" those profiles by inadvertently venting too much soil gas from each point. Therefore, the venting flowrate will be maintained at a low level (approximately 50 ft^3min) and the duration of the venting at each well shall be kept to the minimum time required to collect samples. The parameters utilized during these tests may be varied by the cognizant engineer to optimize sample collection.

To ensure that a representative sample is collected, the VES piping and hoses must be purged, or flushed, prior to collecting the soil-gas samples. An initial flow rate of approximately 50 ft^3/min should be used to flush the system and the valves must be set to allow ambient air to flow in. Meters and gages will be monitored to assure complete flushing. The stabilized values on the meters and gages will be recorded prior to soil vapor collection.

After flushing the lines, the valves must be set to extract a soil-gas sample from the desired well and perforated interval. The pressure, flow rate, carbon tetrachloride concentrations, and radon concentrations will be monitored by instrumentation. The instrument readings should stabilize after several minutes when the fresh air is replaced by the soil vapor. When the readings stabilize, they will be recorded. All process conditions of the VES will be documented either in the field logbook or in the process control system memory. After conditions have stabilized and gas samples have been collected (if required by the cognizant engineer) the soil vapor measurements will be discontinued at that well and/or interval. Soil vapor measurements will be repeated at other wells, as determined by the cognizant engineer.

3.1.6.2 Optimizing Extraction. The data collected during the initial charaterizations will be used primarily for determining the concentrations of carbon tetrachloride that can be expected so as to determine a sound method of operation, i.e., number of GAC to be used, system flow rates, vacuums, etc. Further data collection during full scale VES operation will be used primarily for trending analysis, studying the effect of varying carbon tetrachloride concentrations, flow rate, and depth in the extraction well on the vacuums in monitoring wells. This helps to indicate for a given carbon tetrachloride concentration flow rate and depth, at what distance from the extraction well and at what intensity soil vapor is pulled from the soil. Based on the trending analyses an optimal extraction stategy will be determined that will provide the highest mass flux of carbon tetrachloride.

3.2 SYSTEM MAINTENANCE

System instrument calibration and equipment maintenance will be performed on a routine and as-needed basis. Maintenance activities shall be scheduled to allow minimal system down time, and shall be performed according to manufacturers' recommended instructions.

3.2.1 Routine Maintenance

The VES system and component designs allow easy access for maintenance. This includes provisions for accessing the equipment, removing equipment and material, lubricating the equipment, and performing diagnostic tests. Equipment requiring routine maintenance are listed in Table 3-1 with the suggested frequency and maintenance required.

3.2.2 Instrument Calibrations

Instrument calibrations are performed on routine and as-needed and are performed according to manufacturers instructions. Instruments that require routine calibration are listed below with the required frequency.

Instrument	Calibration Frequency
Alpha CAM	Semiannually
Beta CAM	Semiannually
Radon Monitor	Annually
Compliance CCl_4 Monitor	Annually
Compliance Flow Meters	Annually

Other instruments that may require calibration are the following:

Pressure gages
Vacuum gages
Well manifold flow meters
Humidity sensor
Temperature gages.

Weekly operability checks and monthly alarm interlock checks are required to be performed for the instruments listed below. Test data shall be recorded and documented in the field logbook.

Effluent carbon tetrachloride monitor.

Flow meters located upstream of the primary GAC canister and downstream of the final GAC canister.

3.2.3 Preventive Maintenance

Preventive maintenance includes periodic inspection, testing, and system overhaul on a regular basis, following manufacturer's instructions. This reduces in-service failures and retards system deterioration. Equipment listed in Table 3-1 should be visually inspected (if feasible) at least monthly for signs of wear, leaks, corrosion, or any other indication that may be applicable.

Table 3-1. Routine Maintenance Equipment

Component	Frequency	Required Maintenance
Motor	Quarterly	Visually Inspect
Blower	500 Hours	Change Lubricant and Clean Breather
Belts	Quarterly	Visually Inspect
Water Separator	Monthly	Drain Accumulated Water
HEPA Filters	Quarterly	Check Differential Pressure Gages

3.2.4 Spare Parts List and Site Inventory Requirements

Consumable spare parts (e.g., drive belts, fuses, filter elements, etc.) may be kept on hand at the VES site either in the office trailer or in conex storage boxes. Spare carbon tetrachloride monitors will be maintained by WHC Environmental Field Services Group. Some of the larger, more critical equipment items such as the vacuum blower motor, blower, alpha and beta CAM, and pressure and flow instrumentation will also be maintained as spares.

THIS PAGE INTENTIONALLY
LEFT BLANK

4.0 VES OPERATIONS MONITORING

Monitoring of VES operations will consist of a combination of continuous electronic monitoring/manual sampling to measure carbon tetrachloride and radon concentrations in the vapor stream at various locations throughout the system. Well field monitoring and characterization will be addressed in a separate document (Rohay and Cameron 1993) that will augment VES operations monitoring toward the following objectives:

- Measure the existing concentrations of carbon tetrachloride and other contaminants in the subsurface prior to the initiation of vacuum extraction.
- Investigate how the existing concentrations of carbon tetrachloride and other contaminants vary with time.
- Evaluate the impact of vapor extraction on the distribution and concentrations of carbon tetrachloride and other contaminants in the subsurface.
- Optimize the extraction of carbon tetrachloride vapor from the subsurface.
- Help establish a healthy working environment.

4.1 INSTRUMENTATION

State-of-the-art carbon tetrachloride and radon monitors will be utilized where feasible. In addition, colorimetric tubes, GAC sorbent tubes, gas sampling vials/tubes, combustible gas meters, and other sampling and analytical methods may be used for monitoring purposes. It should be noted that existing carbon tetrachloride instruments do not specifically measure carbon tetrachloride, rather they measure either chlorinated hydrocarbons or volatile organics. Typical instruments used for these measurements include the "Odyssey" Chlorinated Hydrocarbon Vapor Monitor by Transducer Research, Inc. and the photoionization detector (PID) type organic vapor monitor (OVM) by Summit Interests, Thermo Environmental Instruments or HNU, all of which are calibrated for carbon tetrachloride using a gas standard. This, together with process knowledge that the source is known to be predominately carbon tetrachloride, provides reasonable assurance that these instruments can be used to obtain representative carbon tetrachloride measurements.

4.2 VAPOR STREAM

The vapor stream of the VES will be sampled using stainless steel sample extraction tubing from piping sample ports to the monitoring instruments. The vapor stream will be monitored for the constituents described below.

4.2.1 Carbon Tetrachloride

The monitoring of carbon tetrachloride during VES operations will be used to evaluate the impact of VES operations and provide data on the distribution of carbon tetrachloride, soil permeability, and air flow in the well field. Evaluation of monitoring results will be used to: (1) assist in optimizing the VES design and operations; (2) provide compliance with regulatory source emission release criteria; and (3) assist in conducting safe operations and monitoring.

4.2.2 Other Chemical Constituents

The principal contaminants of concern found within the subsurface consist of VOC (principally carbon tetrachloride, chloroform, methylene chloride); butyl alcohol, (a degradation product of TBP and DBBP), and methane. The potential presence of methane is also a safety concern due to its potential explosivity. Therefore, combustible gas meters will be used to sample soil gas from the wells prior to full scale extraction.

4.2.3 Radon

Radon is a natural occuring gas present in varying quantities in all soils. Radon concentrations at the vapor extraction site are below health and safety limits. However, the project scientist or engineer may conduct radon monitoring for research purposes. Since granular activated carbon adsorbs radon and thus concentrates it, the concentrations of radon in the carbon canisters may be of concern. This is being addressed in a separate assessment (Millikin 1992).

4.2.4 Particulate Radionuclides

Particulate radionuclides including plutonium and americium, which would be transported on soil particles, may be entrained into the vented gas stream during VES operations. However, this is not expected, but precautions shall be taken to monitor the system for radiological contamination. A continuous sample of the vapor stream will be drawn through sample filter paper and will be analyzed on a regular basis for the presence of particulate radionuclides. Results of the analyses will be used to seek approval for offsite shipment of the GAC canisters.

The vapor stream will be directly measured for alpha and beta radiation by two process CAM. These CAM are linked via tubes connected to sample ports. The alpha CAM is connected to a port just prior to the stack. The beta CAM is connected to a port just downstream of the vacuum blower. These CAM are equipped with individual audiovisual alarms and send continuous information to the data acquisition system, which has alarms capable of shutting down the VES if necessary.

Other radiological components (tritium, iodine-129, technetium-99, and carbon-14) are not of concern in the unsaturated zone soil because: (1) they are below detection limits in groundwater at the site (Hanford Groundwater Data Base); and/or (2) they were not disposed of into the tile field; and (3) they were not detected during the pilot test.

4.3 EXTRACTION WELLS

The incoming vapor stream from the extraction wells to the VES will be monitored for carbon tetrachloride concetrations to determine the total amount removed from the subsurface. During initial start-up operations these measurements should be taken hourly to characterize the concentrations extracted from each particular well. During normal operations this measurement should be taken at least once a day to keep track of GAC canister loading.

4.4 GAC CANISTER LOADING

4.4.1 Manual Sampling Mode

Based on operational experience gained during Phase I operations, a predictable method was developed for determining GAC canister loading of carbon tetrachloride. Using this method in conjunction with a three GAC canister collection train (2,000 pounds of carbon each) allows for manual sampling for breakthrough between the primary and secondary GAC canisters as a basis for compliance with 25 ppm emissions release criteria documented in the SAD. This method requires the following:

- Use three GAC canisters in the collection train with 2,000 pounds of carbon each.
- Limit incoming concentrations of carbon tetrachloride from the well field to 2,500 ppm.
- Limit flow through the GAC canister train to approximately 500 ft^3/min.
- Sample between the primary and secondary GAC canisters once a day on dayshift monitoring for breakthrough of the primary canister.

When breakthrough of the primary canister occurs samples should be taken more frequently until the canister is fully loaded to optimize the use of GAC. Using this method insures that a release of carbon tetrachloride >25 ppm will not occur.

4.4.2 Automated Sampling Mode

An automated mode of sampling for GAC breakthrough requires that a reliable instrument for measuring carbon tetrachloride concentrations is in place downstream of the final GAC canister. This instrument will monitor for breakthrough of the final canister and will be interlocked to shut down the VES in the event that a concentration >25 ppm is detected. Operating in this mode will require a minimum of two GAC placed in the collection train with 2,000 pounds of carbon each. There is no limit to the concentration allowed from the incoming wells in this mode of operation, however, samples should still be taken between the primary and secondary GAC canisters at least once per day to monitor for saturation of the primary GAC canister. These samples may be taken automatically or manually.

4.4.3 Trending

A method of trending the load-up of the primary GAC canister will be used to determine the total amount of carbon tetrachloride removed from the subsurface and to predict when a canister will experience breakthrough and thereafter saturation.

4.5 EFFLUENT DISCHARGE

Operating the VES in either manual or automated sampling mode for carbon tetrachloride breakthrough will ensure compliance with the 25 ppm emissions release criteria contained in the SAD.

4.6 LIQUID

The water separator is used if high levels of moisture are found in the soil vapor. The tank and it's piping have temperature gages, temperature transmitters, pressure gages, and sampling ports. These sampling ports will be used to sample the liquid for tritium and carbon tetrachloride prior to disposal.

4.7 PHYSICAL PARAMETERS

Several physical parameters will be monitored and transmitted to the process control system computer for processing and storage. The physical parameters are as follows:

- Barometric pressure - the barometric pressure will be measured in atmospheres in the well field continuously throughout the duration of the VES operation. Recordings will be taken by the computer every hour during operation.

- Air temperature - the ambient air temperature will be measured in degrees Centigrade (°C) with a digital thermometer or temperature transducer. The frequency of the temperature recordings will be hourly.

- Volumetric flow rate - the flow rate at the extraction well will be measured by a flow meter in the well field intake manifold. The meter should be able to read up to 500 ft^3/min. The flow measurements are used to monitor the extraction operation.

- Relative humidity - the relative humidity of the soil vapor will be measured hourly just before the water separator. This reading will indicate the need to reduce moisture in the soil vapor stream.

5.0 DOCUMENTATION AND RECORDS

5.1 FIELD LOGBOOK

The field logbook will be used to record daily operating information, including site control changes, inspection findings, any operational changes (for example, flow or vacuum adjustments, or moving to alternate well locations), changes to the process control system, test data, and equipment operability and function checks.

Logbooks will be maintained and controlled in accordance with Environmental Investigations Instruction (EII) 1.5, Field Logbooks (WHC 1988).

5.2 COMPUTER-GENREATED DATA

All process control data is maintined in the central memory of the computer. Historical trending data can be accessed directly from the computer for reporting purposes. Historical data will be copied to transferable storage media on a weekly basis and shall be maintained in the site project files.

5.3 PROJECT FILES

Project files will be maintained in accordance with Appendix C, Project Management Plan.

9 3 1 2 9 0 3 0 3 2 2

6.0 REPORTING

Weekly carbon tetrachloride production data tables will be included in all routine weekly ERA statusing reports. The contents of the report and tables will be submitted to DOE Richland Field Office (RL), EPA, and Ecology, at weekly interface meetings.

Quarterly status reports will be completed that summarize the current status of VES operations, VES operational history for the preceding 3 months, VES design changes, identification and cumulative extraction amounts of VOC, analytical results, site characterization information, and any pertinent activities associated with the VOC-Arid ID. An annual report will be submitted that summarizes these same activities over the preceding year. These documents will be submitted to RL, EPA, and Ecology.

9 3 1 2 9 0 3 0 5 2 3

7.0 SCHEDULE

The VES will begin extraction of carbon tetrachloride and associated VOC at the 216-Z-1A Tile Field in January 1992 (Figure 7-1). Further expansion of the 216-Z-1A Tile Field well field will occur throughout its operational period.

During this same time period, the well field for the 216-Z-18 Crib will be prepared for soil vapor extraction testing. The extraction testing will be conducted using the system located at the 216-Z-1A Tile Field. The testing will occur during the spring of 1992.

Based on test results, the VES will extract from both the 216-Z-1A Tile Field and the 216-Z-18 Crib alternately or simultaneously. Extraction will continue as long as reasonably achievable based on results and direction/ concurrence with RL and EPA (the lead regulatory agency).

Soil vapor extraction at the 216-Z-9 Crib will be conducted in the spring of 1993.

9 5 1 2 9 0 3 0 2 4

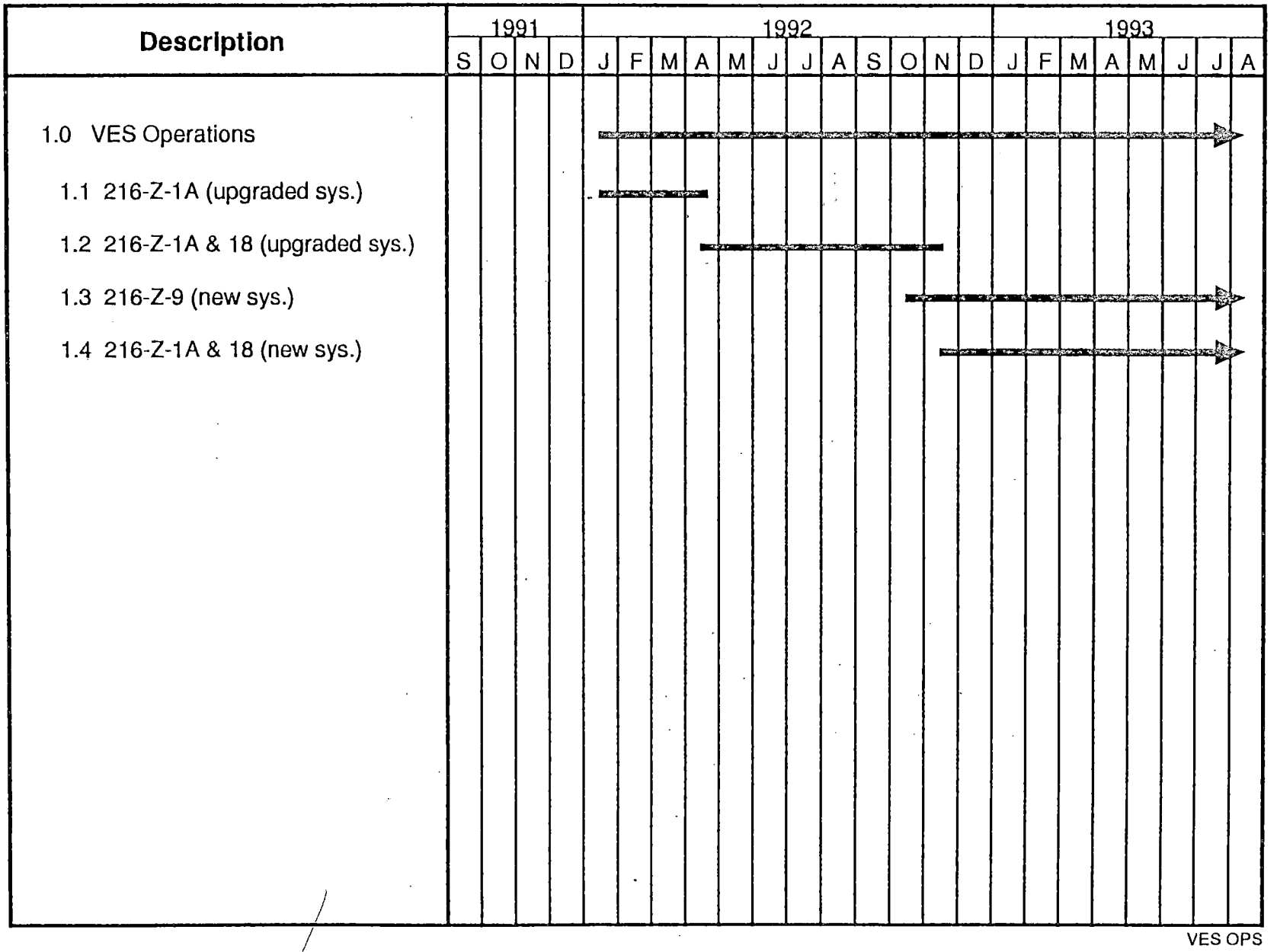

Figure 7-1. Schedule for VES Operations.

8.0 REFERENCES

DOE-RL, 1991, *Exedited Response Action Proposal (EE/CA & EA) for 200 West Area Carbon Tetrachloride Plume*, DOE/RL-91-32, Draft B, U.S. Department of Energy, Richland Field Office, Richland, Washington.

Hagood, M. C., and V. J. Rohay, 1991, *200 West Area Carbon Tetrachloride Expedited Response Action Projct Plan*, WHC-SD-EN-AP-046, Rev. 0, Westinghouse Hanford Company, Richland, Washington.

Lehrschall, R. R., 1993, *Safety Assessment for the 200 West Area Expedited Response Action for Remediation of Carbon Tetrachloride*, WHC-SD-EN-SAD-004, Rev. 1, Westinghouse Hanford Company, Richland, Washington.

Millikin, E. J., 1192, Carbon Tetrachloride Vapor Extraction Project, Radon Assessment Test Plan, WHC-SD-EN-TP-012, Rev. 1, Westinghouse Hanford Company, Richland, Washington.

Rohay, V. J., 1991, *200 West Area Carbon Tetrachloride Expedited Response Action Phase II Site Evaluation Work Plan*, WHC-SD-EN-AP-059, Rev. 0, Westinghouse Hanford Company, Richland, Washington.

Rohay, V. J. and R. Cameron, 1993, FY 93 Well Field Enhancement Plan, WHC-SD-EN-AP-114, Rev. 0, Westinghouse Hanford Company, Richland, Washington.

9 3 1 2 9 0 3 0 3 2 6

APPENDIX A

DESIGN DRAWINGS

9 3 1 9 4 0 3 0 3 2 7

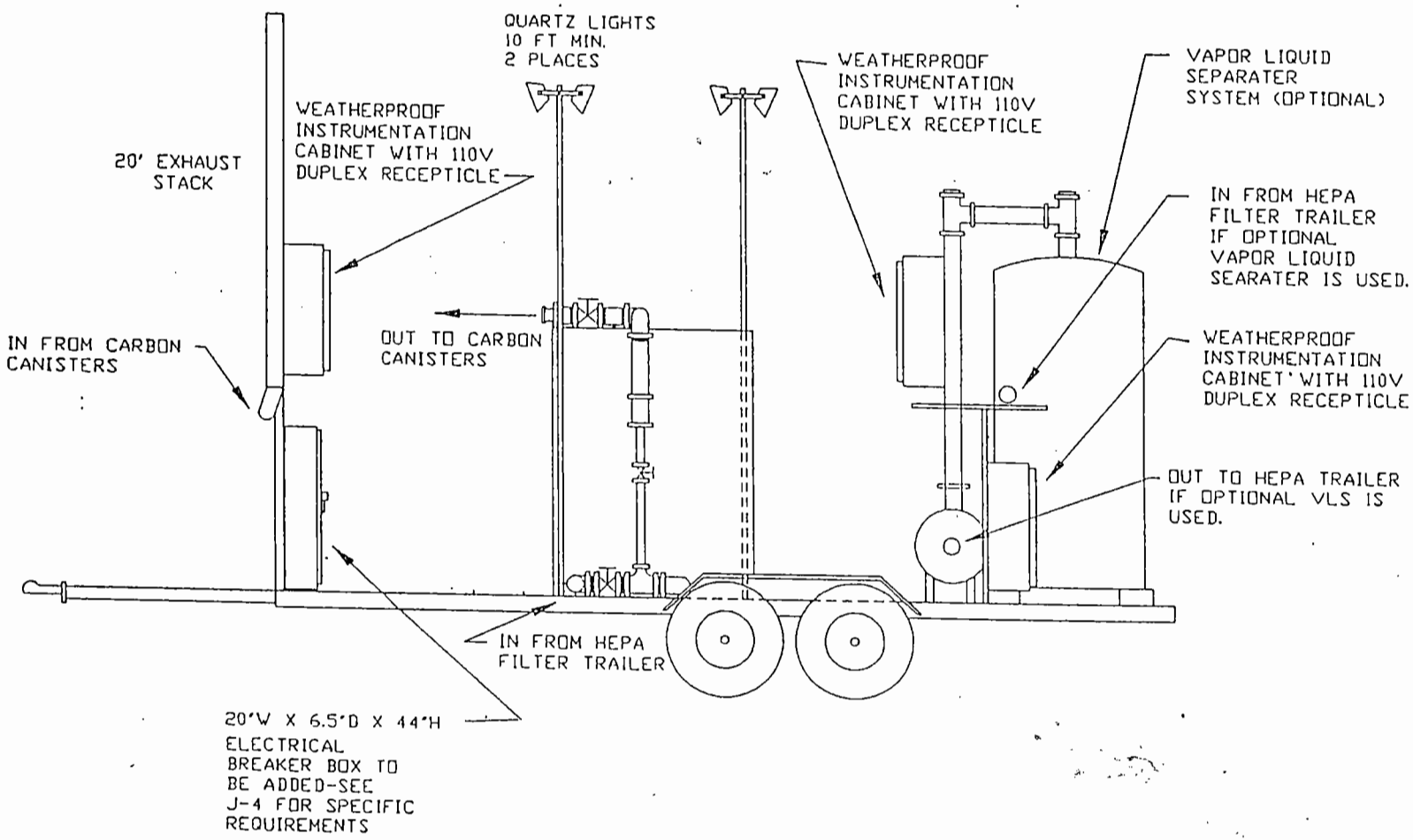

Figure A-1. Typical VES Blower Trailer.

Figure A-2. Typical VES Piping Diagram.

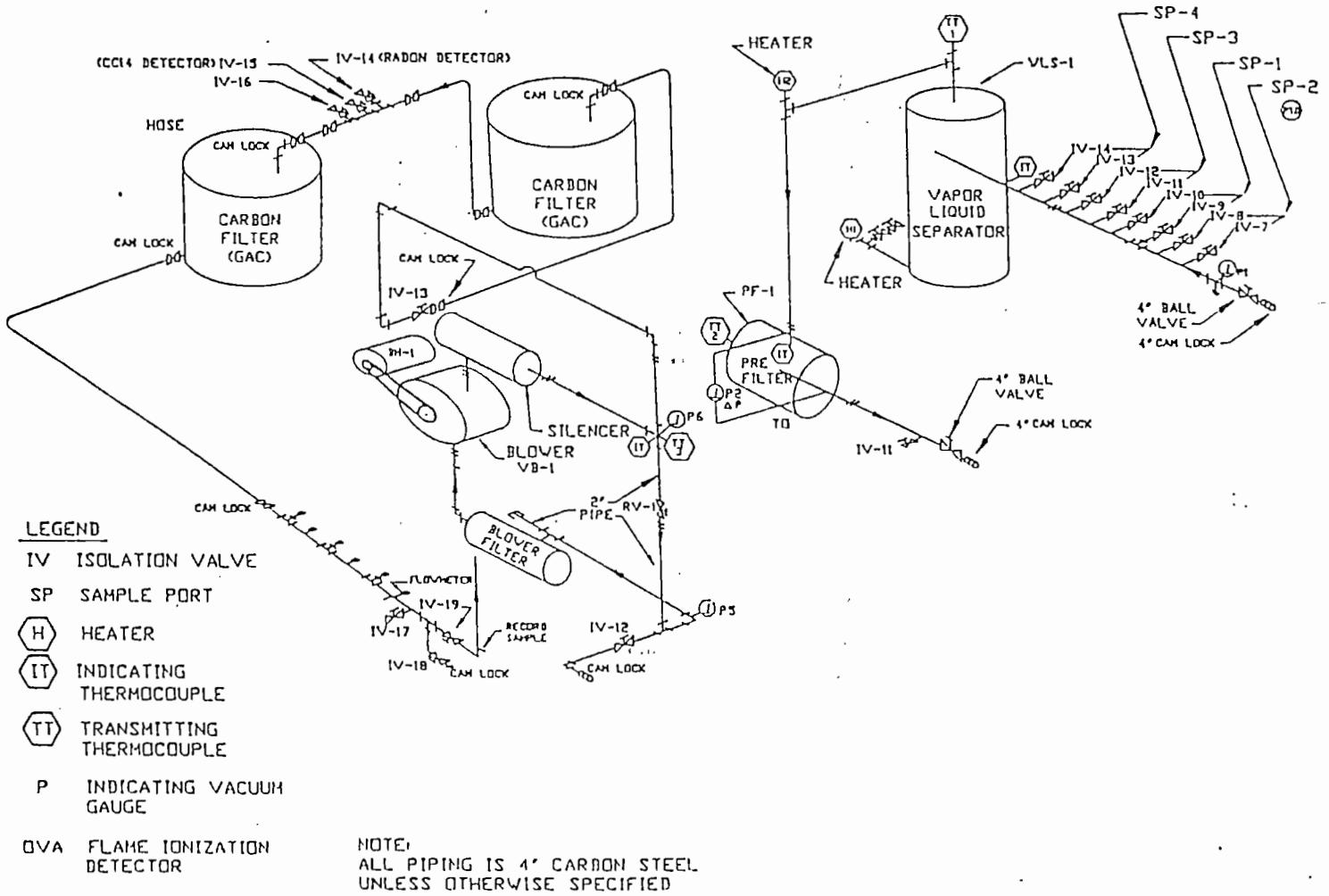

Figure A-3. Typical VES Process Flow Diagram.

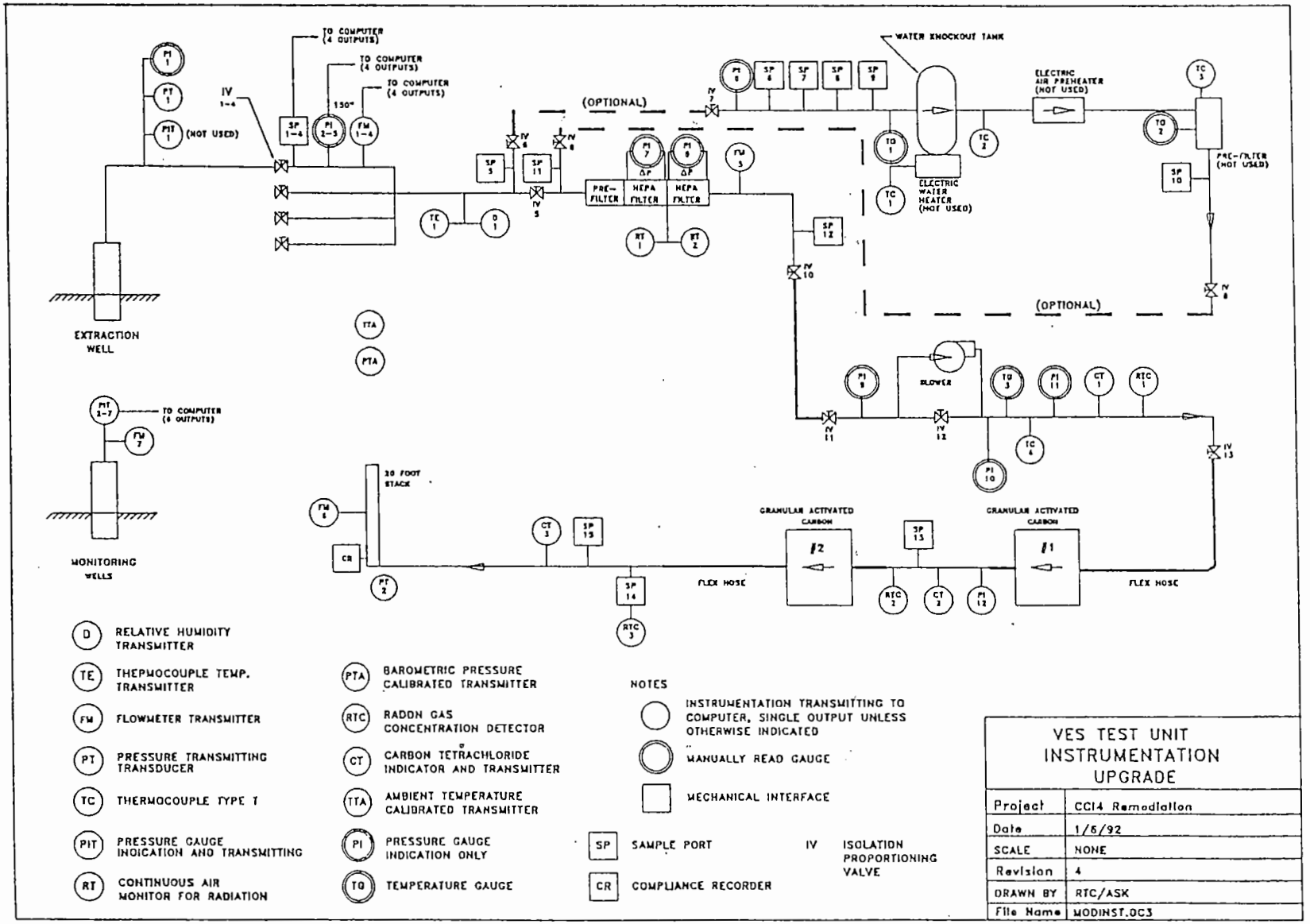

Figure A-4. Typical Extraction Well Construction.

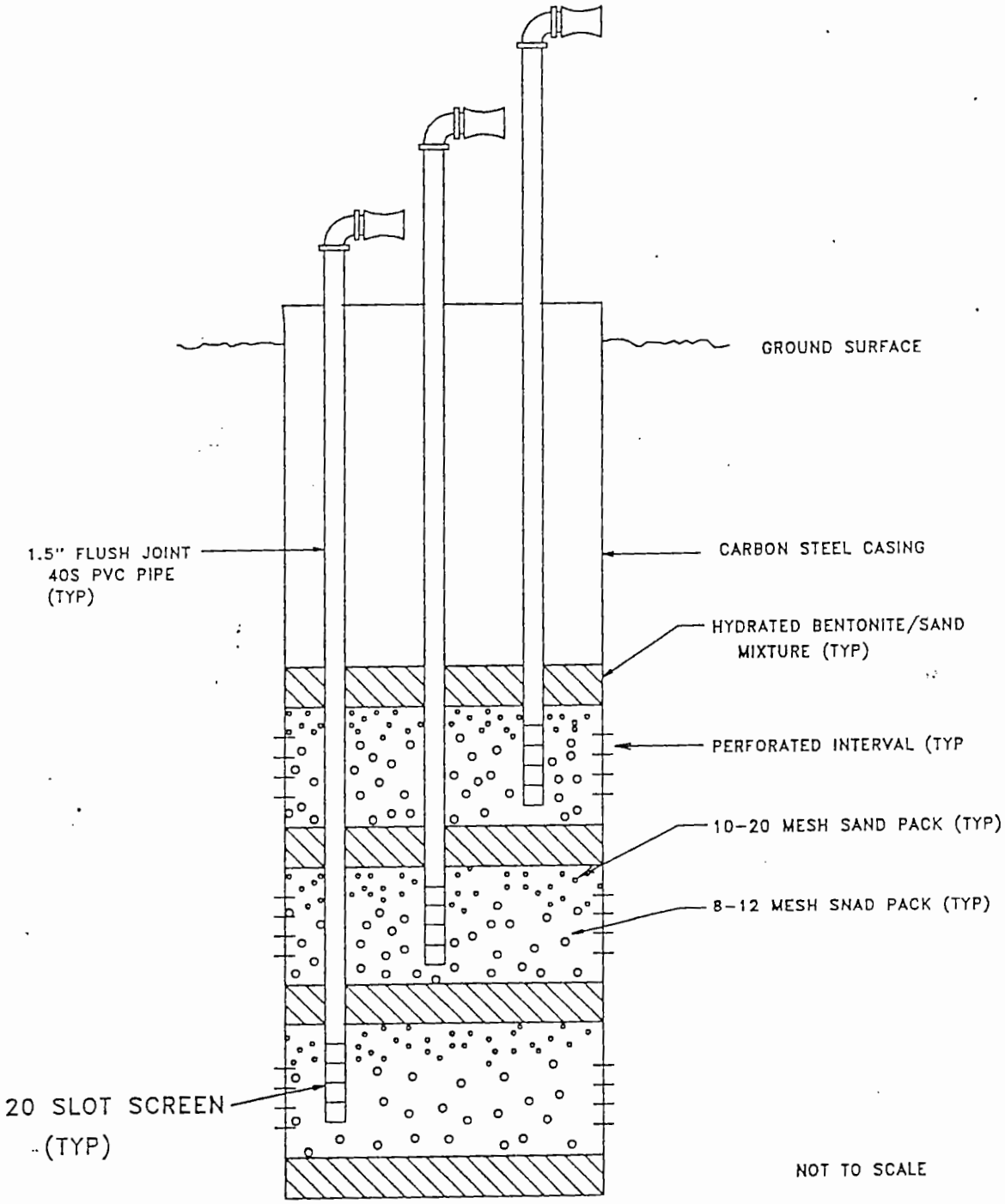

Figure A-5. Typical Monitoring Well Construction.

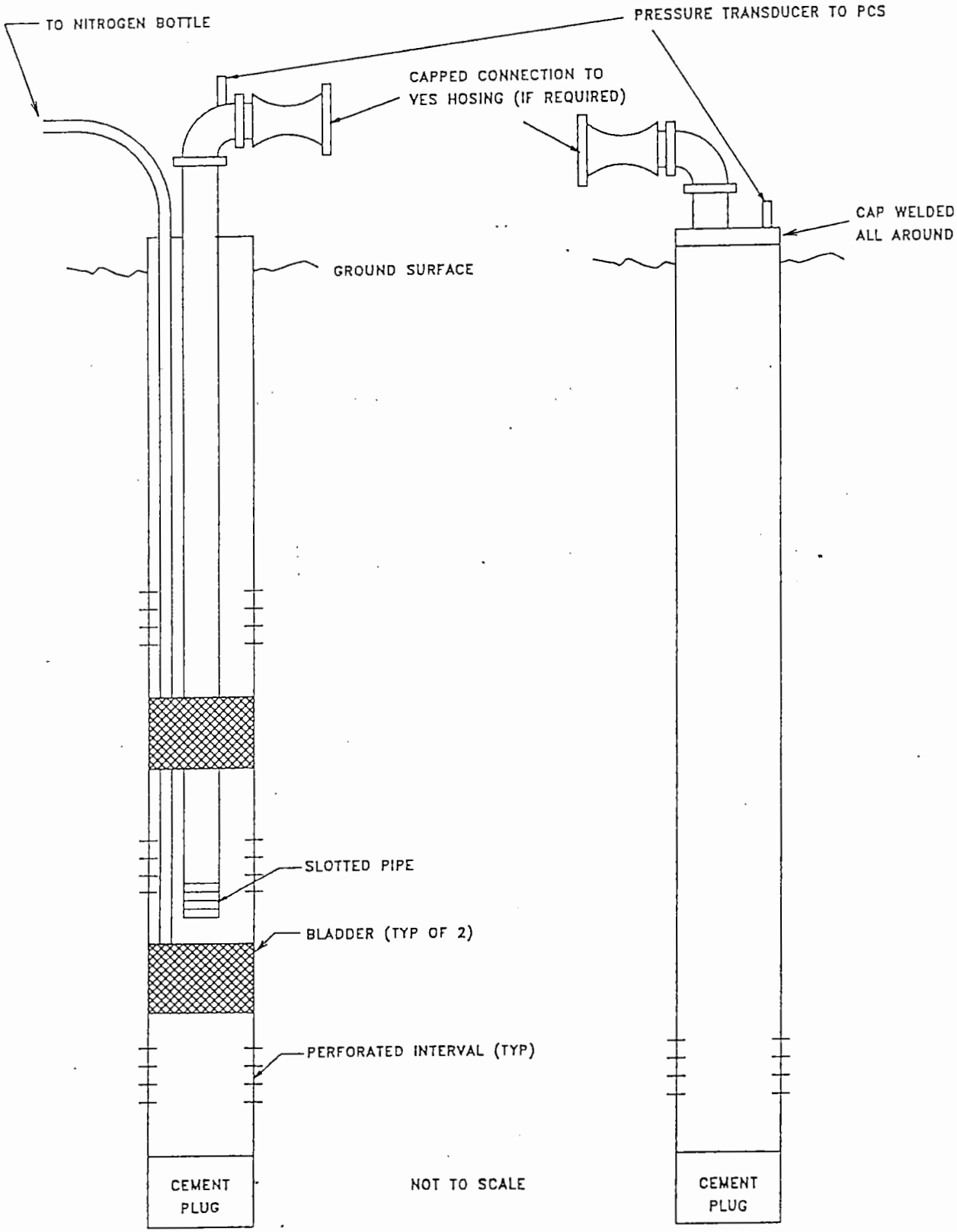

TYPICAL PACKER MONITORING WELL

TYPICAL SEALED MONITORING WELL

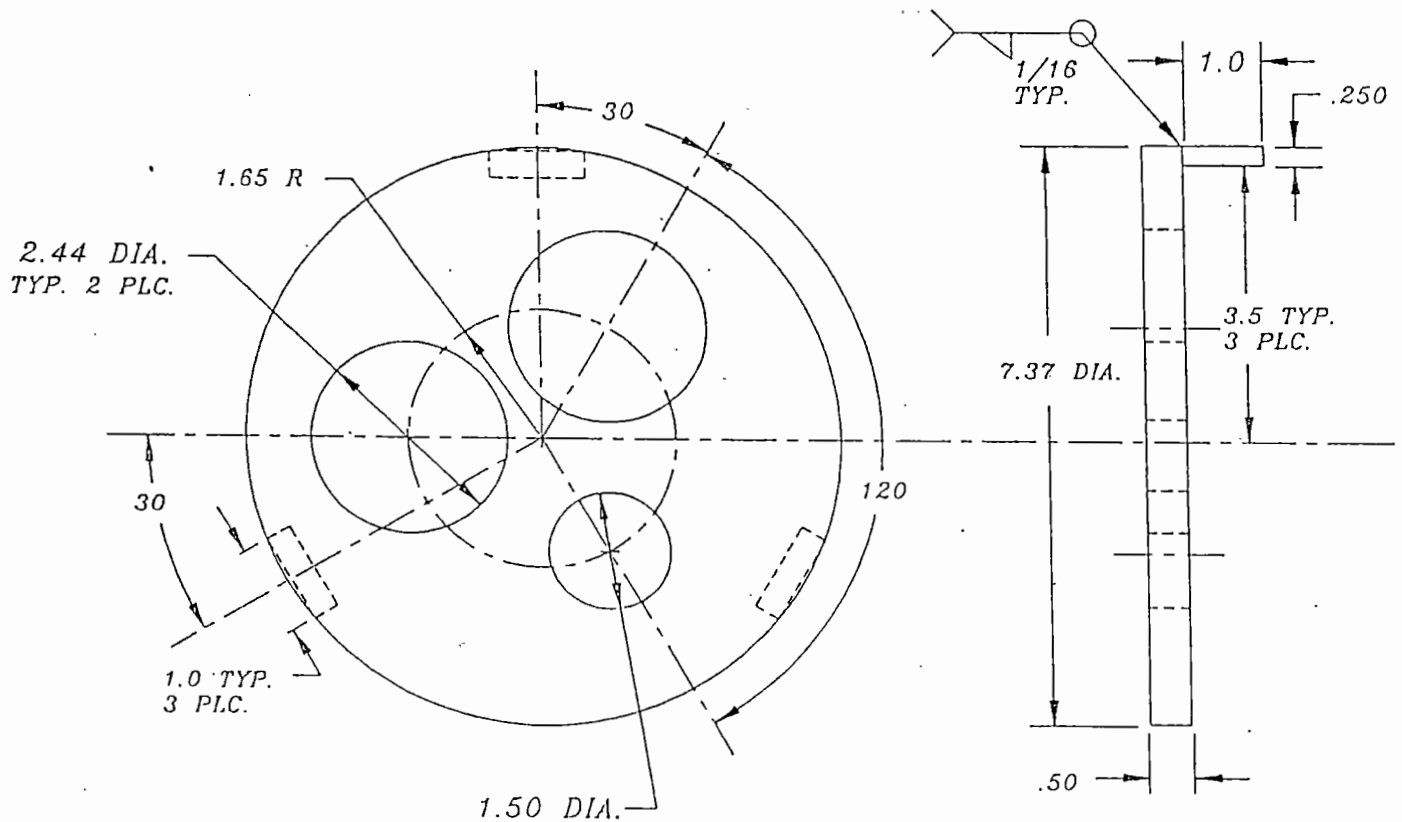

Figure A-6. 6-Inch Extraction Well Cap.

Figure A-7. 8-Inch Extraction Well Cap.

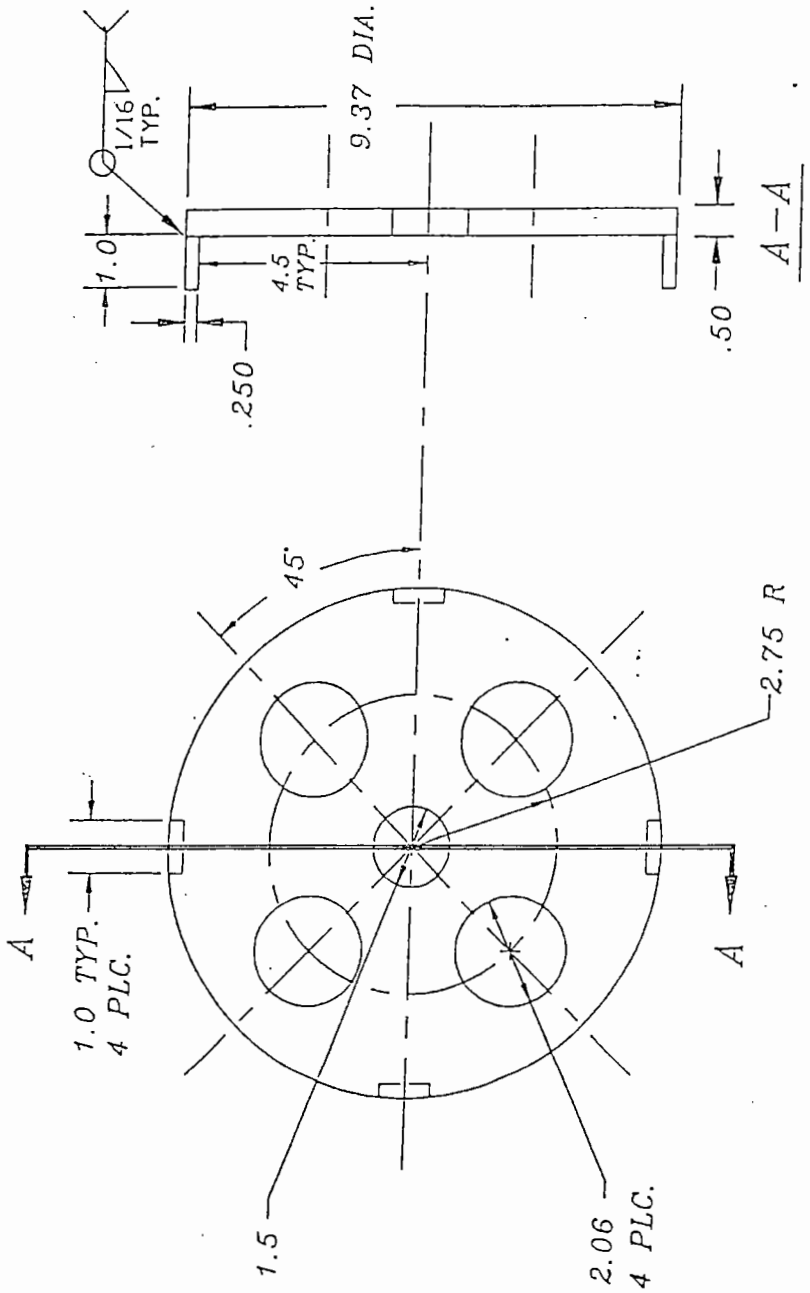

Figure A-8. 6-Inch Monitoring Well Cap

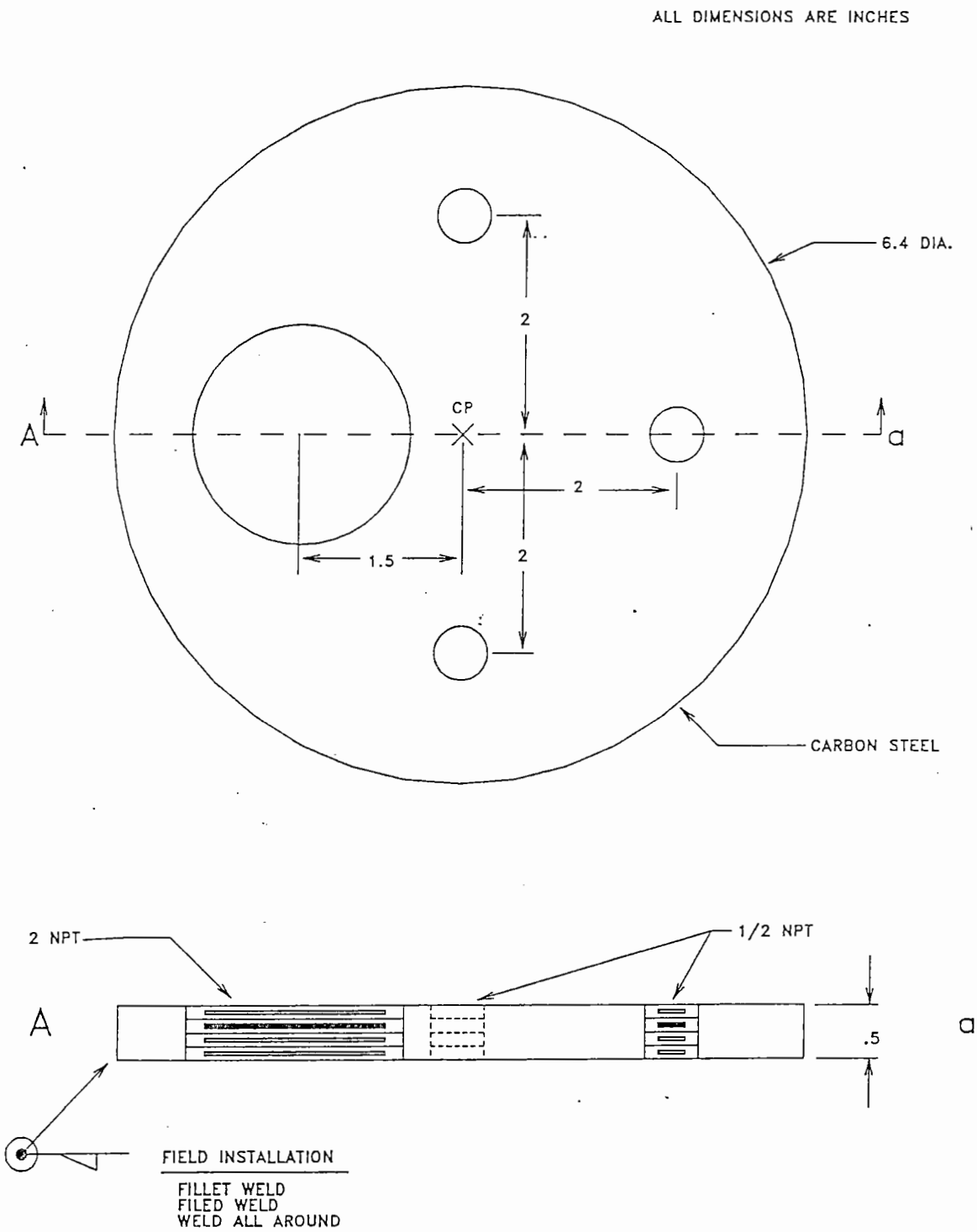

6" MONITORING WELL CAP

Figure A-9. 8-Inch Monitoring Cap.

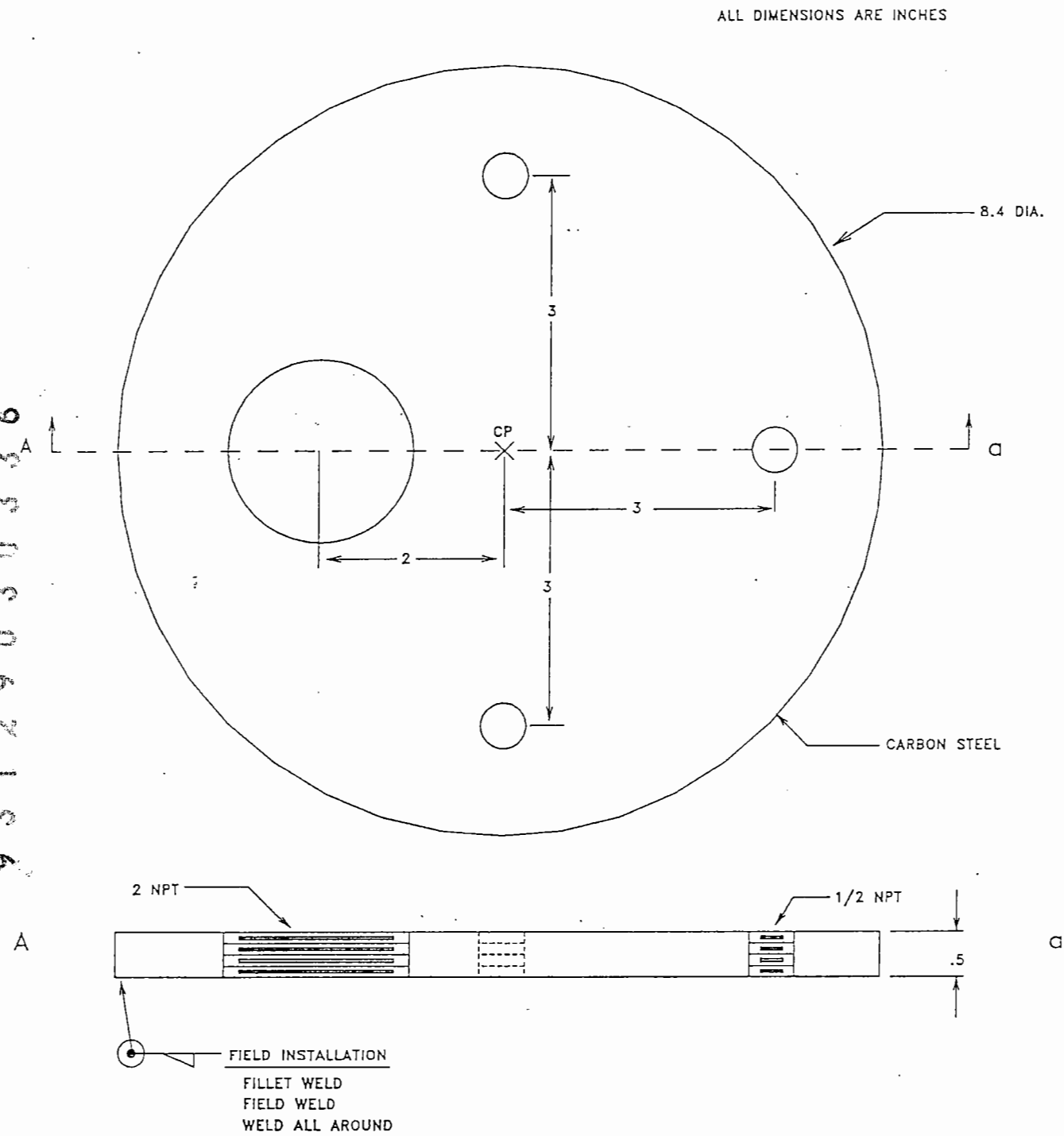

8" MONITORING WELL CAP

Figure A-10. Typical Wellhead Manifold - Top View.

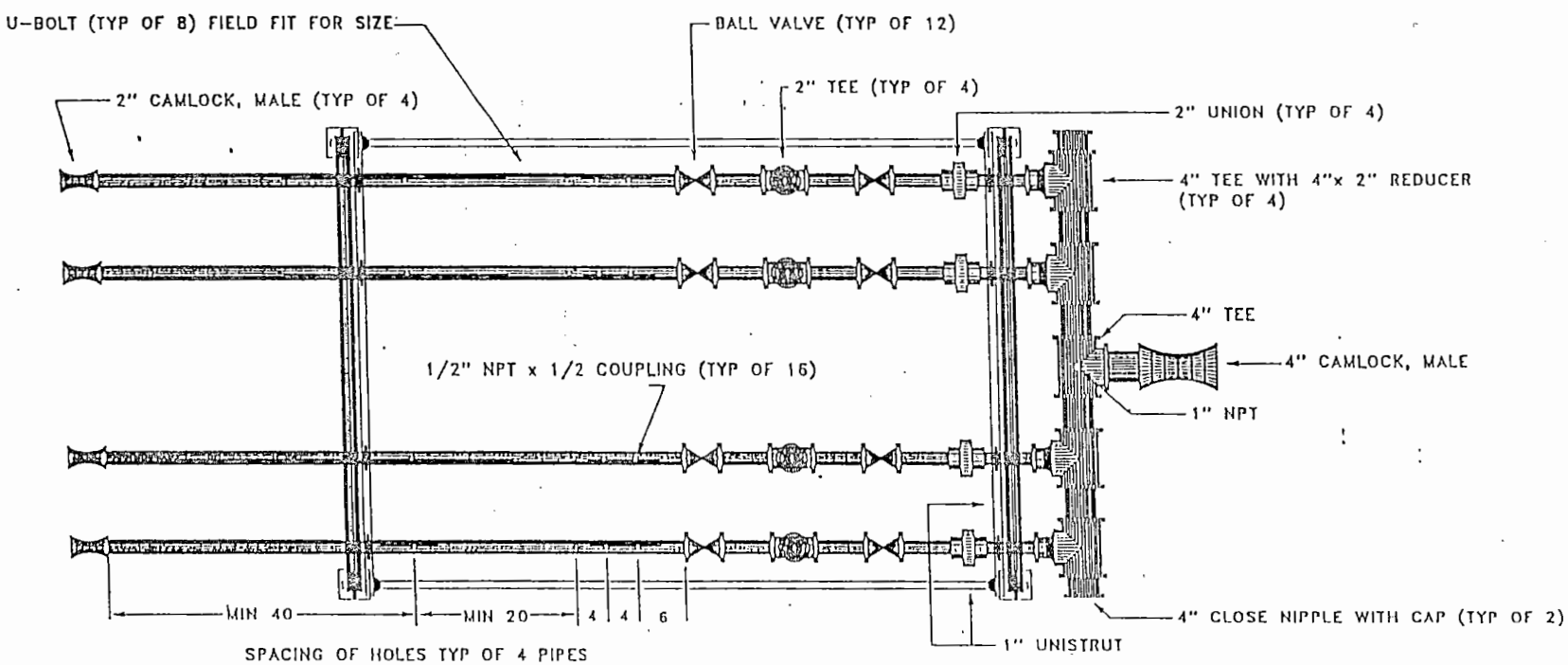

DIMENSIONS ARE IN INCHES

Figure A-11. Typical Wellhead Manifold - Front View.

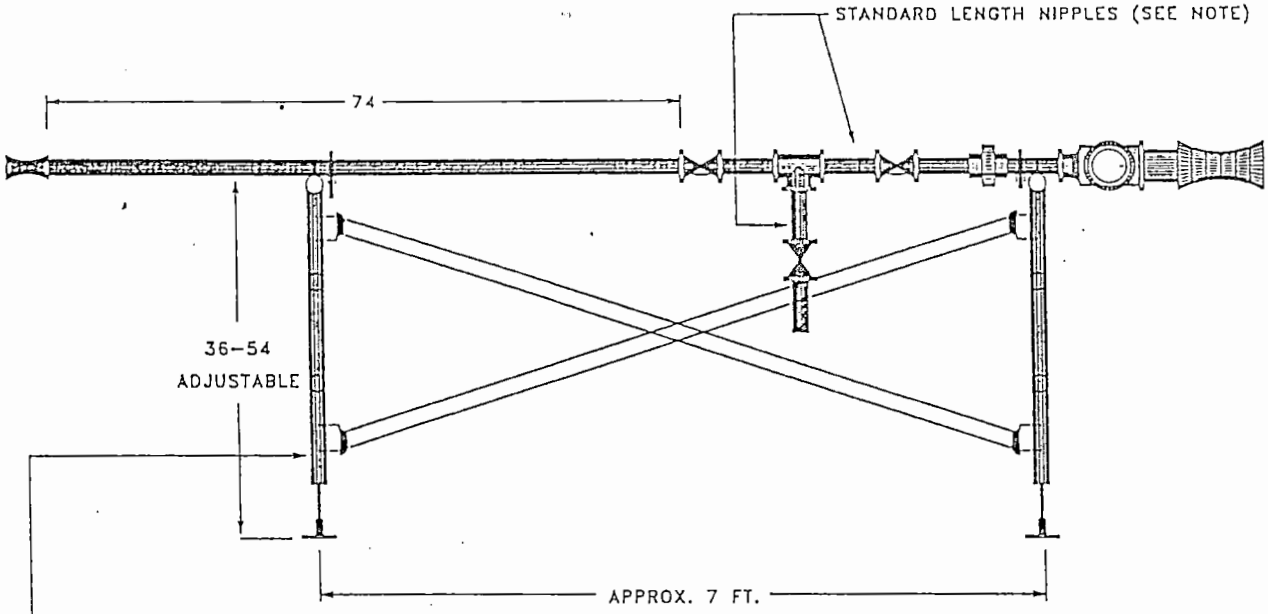

SCAFFOLDING – END FRAME (3 FT HEIGHT, 7 FT LENGTH) MCMASTER–CARR PART NO. 8187T24
BASE PLATE MCMASTER–CARR PART NO. 8187T48
ADJUSTMENT SCREW (LEVEL TO 18 IN.) MCMASTER–CARR PART NO. 8187T49

NOTES

SCAFFOLDING IS APPROX. WIDTH 7 FT, DEPTH 5 FT, HEIGHT 36–54 IN. ADJUSTABLE
UNITS ARE INCHES UNLESS OTHERWISE NOTED
PIPE IS FIELD–FITTED USING STANDARD LENGTH NIPPLES (APPROX. 6")
EXCEPT WHERE INVOLVING THE SPACING OF INSTRUMENTATION HOLES.

FRONT VIEW

9312903038

Figure A-12. Typical HEPA Filtration Unit.

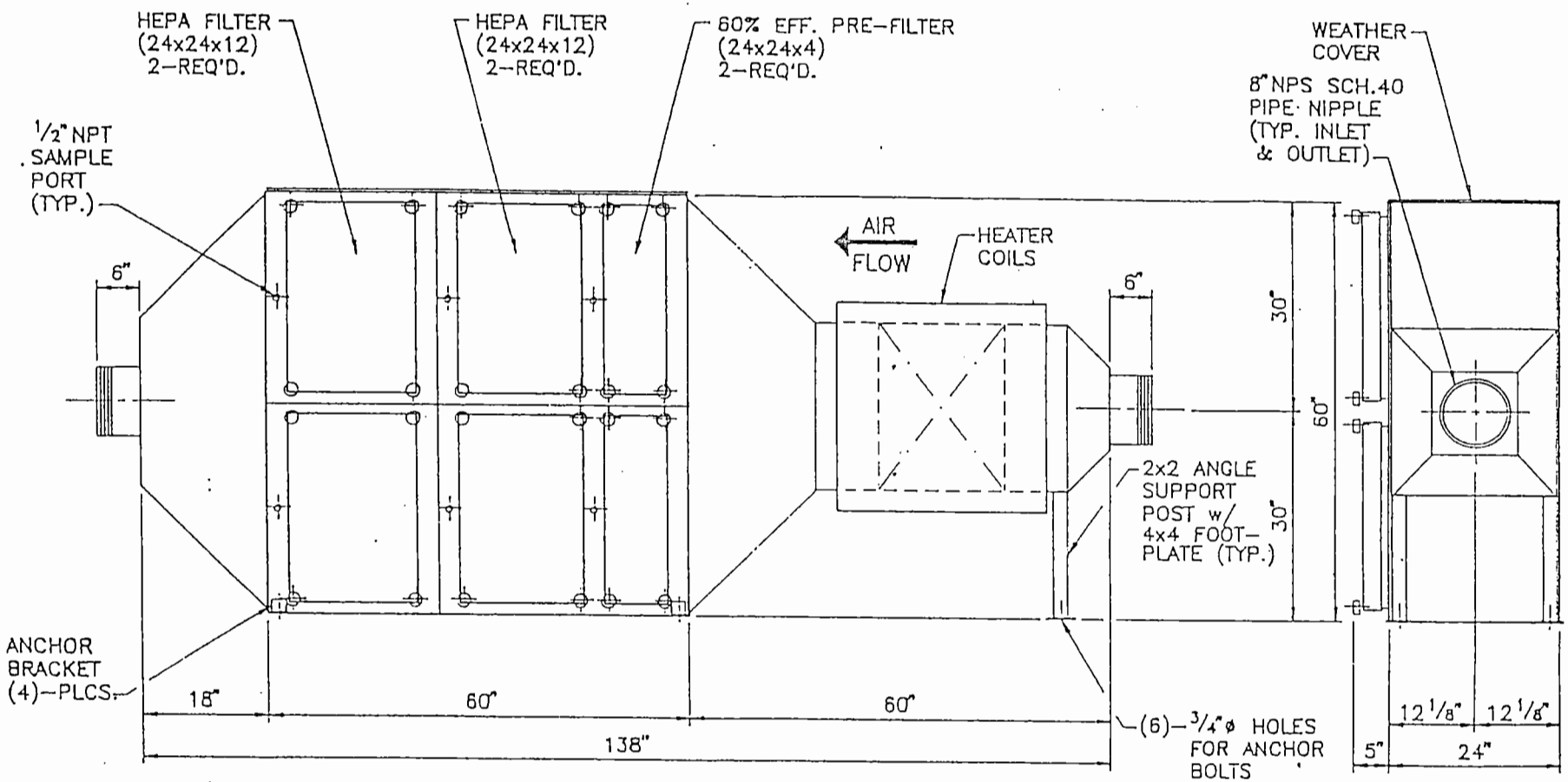

NOTES: 1.) MATERIAL- 304 ST.STL. (14 GA. MIN) (REINFORCED WITH STRUCTURAL ANGLES)
2.) INSTALLED WT.(APPROX.)- 1180 LBS.
3.) CAPACITY- 1500 SCFM
4.) UNIT SHALL BE DESIGNED TO WITHSTAND -10" Hg VACUUM. (-136" W.G.)

SCALE 1=16

APPENDIX B

HEALTH AND SAFETY PLAN

9 3 1 2 9 0 3 0 3 4 0

CONTENTS

1.0 GENERAL CONSIDERATIONS AND REQUIREMENTS B-1
- 1.1 DESIGNATED SAFETY PERSONNEL B-1
- 1.2 MEDICAL SURVEILLANCE B-2
- 1.3 TRAINING B-3
- 1.4 RADIATION DOSIMETRY B-3
- 1.5 REQUIREMENTS FOR USE OF RESPIRATORY PROTECTION B-4

2.0 GENERAL PROCEDURES B-4
- 2.1 GENERAL WORK SAFETY PRACTICES B-4
- 2.2 PERSONAL PROTECTIVE EQUIPMENT B-5
- 2.3 PERSONNEL DECONTAMINATION B-6
- 2.4 EMERGENCY PREPARATION B-6

3.0 SITE BACKGROUND B-6

4.0 SCOPE OF WORK AND POTENTIAL HAZARDS B-7
- 4.1 CHEMICAL HAZARDS B-7
- 4.2 RADIATION HAZARDS B-7
- 4.3 ASSESSMENT AND MITIGATION OF POTENTIAL HAZARDS B-7

5.0 ENVIRONMENTAL AND PERSONAL MONITORING B-8

6.0 PERSONAL PROTECTIVE EQUIPMENT B-8

7.0 SITE CONTROL B-8

8.0 DECONTAMINATION PROCEDURES B-9

9.0 CONTINGENCY AND EMERGENCY RESPONSE PLANS B-9

10.0 REFERENCES B-9

9 3 1 2 9 0 3 0 3 4 1

1.0 GENERAL CONSIDERATIONS AND REQUIREMENTS

The purpose of this health and safety plan is to outline standard health and safety procedures for Westinghouse Hanford Company (WHC) employees and contractors engaged in operation and maintenance of the carbon tetrachloride expedited response action (ERA) vapor extraction system (VES). This health and safety plan pertains to the operation of the VES within the 216-Z-1A Tile Field. Activities include startup, operation, routine maintenance, and shutdown procedures. Appropriate site-specific safety documents (e.g., Hazardous Waste Operations Permit [HWOP] or Job Safety Analysis [JSA]) will be written for each specific activity or group of activities. A more complete discussion of WHC environmental safety procedures is presented in *Health and Safety for Hazardous Waste Field Operations* (WHC 1992, Vol. 4).

All employees of WHC or any contractor who is involved with onsite activities of the VES shall read the site-specific safety documents and related HWOP as well as attend a prejob safety or tailgate meeting to review and discuss the activity.

1.1 DESIBNATED SAFETY PERSONNEL

The project engineer and each environmental field service technician (EFST) are responsible for site safety and health. Specific individuals will be assigned on an activity-by-activity basis by project management. Their names will be properly recorded before the activity is initiated. The HWOP shall identify personnel responsible for each specific task.

All nonroutine activities shall be cleared through the project engineer. The project engineer has responsibility for the following:

- Allocating and administering resources to successfully comply with all technical and health and safety requirements.
- Verifying that all permits, supporting documentation, and clearances are in place (e.g., electrical outage requests, welding permits, excavation permits, HWOP or JSA, sampling plan, radiation work permits [RWP], and onsite/offsite radiation shipping records).
- Providing technical advice during routine operations and emergencies.
- Coordinating conflict resolutions that may arise between RWP and the implementation of the HWOP or JSA with health physics.
- Handling emergency response situations as required.
- Conducting prejob safety meetings.
- Interacting with adjacent building occupants and/or inquisitive public.

The EFST is responsible for implementing the HWOP at the site. The EFST shall perform the following:

- Daily walkthrough inspection using the Daily Checklist. The EFST will check the VES equipment and operation when the system is operating.
- Monitor chemical, physical, and (in conjunction with the health physics technician) radiation hazards to assess the degree of hazard present during maintenance activities.
- Inform the appropriate site management and safety personnel of significant changes to the system.
- Determine that levels of protection and safety equipment available, as outlined in the HWOP, are available and are properly utilized.
- Monitor the performance of all personnel to ensure that the required safety procedures are followed as outlined in the HWOP.
- Halt operations immediately, if necessary, due to unsafe or potential exposure problems.

The ultimate responsibility and authority for employee's health and safety lies with the employee and the employee's colleagues. Each employee is responsible for exercising the utmost care and good judgment in protecting his or her personal health and safety and that of fellow employees. Should any employee observe a potentially unsafe condition or situation, it is that employees responsibility to immediately bring the observed condition to the attention of the appropriate health and safety personnel, as designated previously. In the event of an immediately dangerous or life-threatening situation, the employee automatically has temporary "stop work" authority and the responsibility to immediately notify the field team leader or site safety officer.

When work is temporarily halted because of a safety or health concern, personnel will exit the exclusion zone and meet at a predetermined place in the support zone. The field team leader, site safety officer, and health physics technician will determine the next course of action.

1.2 MEDICAL SURVEILLANCE

All field team members engaged in activities within the 216-Z-1A Tile Field shall have baseline physical examinations and be participants in WHC (or an equivalent) hazardous waste worker medical surveillance program. For further information refer to *Health and Safety for Hazardous Waste Field Operations* (WHC 1992, Vol. 4).

Medical examinations will be designed to identify any pre-existing conditions that may place an employee at high risk, and will verify that each worker is physically able to perform the work required by this plan without undue risk to personal health. The physician shall determine the existence of

conditions that may reduce the effectiveness or prevent the employee's use of respiratory protection. The physician shall also determine the presence of conditions that may pose undue risk to the employee while performing the physical tasks of this work plan using level B personal protection equipment. This would include any condition that increases the employee's susceptibility to heat stress.

1.3 TRAINING

Before engaging in any onsite activities, each team member is required to have received 40 hours of health and safety training related to hazardous waste site operations and at least 8 hours of refresher training each year thereafter, as specified in 29 CFR 1910.120. In addition, each inexperienced employee (never having performed site characterization) will be directly supervised by a trained/experienced person for a minimum of 24 hours of field experience.

Site-specific training shall be given to each person entering the 216-Z-1A Tile Field after that individual has read the HWOP under which they are entering to perform work. Visitors shall be briefed by the project engineer or the EFST prior to their entering the field. Both the site-specific training and the briefings shall cover: levels of protection, chemical and radiological hazards present, safety procedures, decontamination, emergency procedures, and offer the individuals the opportunity to ask questions.

For the purposes of this plan, a visitor is defined as any person visiting the Hanford Site who is not a Westinghouse Hanford employee or a WHC contractor directly involved in the Resource Conservation and Recovery Act of 1976 (RCRA)/Comprehensive Environmental Response, Compensation and Liability Act of 1980 (CERCLA) facility investigation activities, including but not limited to those engaged in surveillance, inspection, or observation activities.

Visitors who must, for whatever reason, enter the restricted or radiation control areas, shall be subject to all of the applicable training, respirator fit testing, and medical surveillance requirements addressed in Westinghouse Hanford Environmental Investigations Instructions (EII) 1.1 and Appendix B to EII 1.1 (WHC 1988a).

1.4 RADIATION DOSIMETRY

All personnel engaged in onsite activities shall be assigned dosimeters according to the requirements of the RWP applicable to that activity. All visitors shall be assigned basic dosimeters. Work within the radiation control areas require all personnel to review and follow the RWP.

1.5 REQUIREMENTS FOR USE OF RESPIRATORY PROTECTION

All employees of WHC and subcontractors who may be required to use air-purifying or air-supplied respirators must be included in the medical surveillance program and be approved for the use of respiratory protection by the Hanford Environmental Health Foundation or other licensed physician. Each team member must be trained in the selection, limitations, and proper use and maintenance of respiratory protection (existing respiratory protection training may be applicable towards the 40-hour training requirement).

Before using an air-purifying respirator, each employee must have been fit-tested (within the previous year) for the specific make, model, and size according to WHC fit-testing procedures. Beards (including a few days' growth), large sideburns, or moustaches that may interfere with a proper respirator seal are not permitted.

Subcontractors must provide evidence to WHC that personnel are participants in a medical surveillance and respiratory protection program that complies with 29 CFR 1910.120 and 29 CFR 1910.134, respectively.

2.0 GENERAL PROCEDURES

The following personal hygiene and work practice guidelines are intended to prevent injuries and adverse health effects. A hazardous waste site poses a multitude of health and safety concerns because of the variety and number of hazardous substances present. These guidelines represent the minimum standard procedures for reducing potential risks associated with this project and are to be followed by all jobsite employees <u>at all times</u>.

2.1 GENERAL WORK SAFETY PRACTICES

The following work practices shall be observed when operating within the 216-Z-1A Tile Field:

- Eating, drinking, smoking, taking certain medications, chewing gum, and similar actions are prohibited within the exclusion zone. All sanitation facilities shall be located outside the exclusion zone; decontamination is required per the site-specific HWOP or JSA.
- Personnel shall avoid direct contact with contaminated materials unless necessary for sample collecting or required observation.
- While operating in the controlled zone, personnel shall use the "buddy system" during certain tasks.
- Requirements of Westinghouse Hanford radiation protection and RWP manuals shall be followed for all work involving radioactive materials or conducted within a radiation control area.

- Normal onsite work activities shall only be carried out during daylight hours, unless the entire control zone is adequately illuminated with artificial lighting. Illumination of the work area shall meet the requirements of 29 CFR 1910.120(m).

- Be alert to potentially changing exposure conditions as evidenced by such indications as perceptible odors.

- Do not under any circumstances enter or ride in or on any backhoe bucket, materials hoist, or any other similar device not specifically designed for carrying passengers.

- Tools and equipment will be kept off the ground whenever possible to avoid tripping hazards and the spread of contamination.

- Catalytic converters on the underside of vehicles are sufficiently hot to ignite dry grass. Team members should not drive over dry grass that is higher than the ground clearance of the vehicle and should be aware of the potential fire hazard posed by catalytic converters at all times. Never allow a running or hot vehicle to sit in a stationary location over dry grass or other combustible materials.

- Follow all provisions of each site-specific RWP.

2.2 PERSONAL PROTECTIVE EQUIPMENT

- Personal protective equipment will be selected specifically for the hazards identified in the HWOP. The EFST in conjunction with Westinghouse Hanford Health Physics and Industrial Hygiene and Safety is responsible for choosing the appropriate type and level of protection required for different activities at the job site.

- Levels of protection shall be appropriate to the hazard to avoid either excessive exposure or additional hazards imposed by excessive levels of protection. The HWOP will contain provisions for adjusting the level of protection as necessary. These personal protective equipment specifications must be followed at all times, as directed by the field team leader, health physics technician, and EFST.

- Each employee must have a hardhat, safety glasses, and substantial protective footwear available to wear as specified in the HWOP, JSA, or RWP.

- In areas where excessive noise is present signs will be posted "Hearing Protection Required" and team members will have had noise control training.

- Personnel should maintain a high level of awareness of the limitations in mobility, dexterity, and visual impairment inherent in the use of level B and level C personal protective equipment.

- Personnel should be alert to the symptoms of fatigue, heat stress, and cold stress and their effects on the normal caution and judgment of personnel.

2.3 PERSONNEL DECONTAMINATION

- The HWOP will describe in detail methods of personnel decontamination, including the use of contamination control corridors and step-off pads when appropriate. The location and arrangement of the decontamination equipment shall be incorporated in the HWOP.

- Thoroughly wash hands and face before eating or putting anything in the mouth to avoid hand-to-mouth contamination.

- Disposable clothing will be containerized as determined by the site safety officer.

2.4 EMERGENCY PREPARATION

- Prearranged hand signals or other means of emergency communication will be established when respiratory protection equipment is to be worn, because this equipment seriously impairs speech.

- The Hanford Fire Department shall be notified before the start of the project. This notification shall include the location and nature of the various types of field work activities as described in the work plan. A site location map shall be included in this notification.

3.0 SITE BACKGROUND

On December 20, 1990, the U.S. Environmental Protection Agency and the Washington Department of Ecology issued a letter to the U.S. Department of Energy, Richland Field Office, requesting an ERA plan to mitigate further carbon tetrachloride soil and groundwater contamination in the 200 West Area. WHC drafted an ERA project plan proposing a goal to reduce or stabilize the carbon tetrachloride vapor spread from the unsaturated (vadose) soils. These soils are beneath the Plutonium Finishing Plant (PFP) disposal sites.

The disposal site investigated at this time is the 216-Z-1A Tile Field. This site received PFP plutonium treatment process carbon tetrachloride waste mixtures from 1955 until 1973 at different time intervals. Predications for the amount of carbon tetrachloride disposed at each of the sites range from 100,000 to 400,000 liters (averaging approximately 200,000 liters) each.

The VES is used to pull the soil vapor from the subsurface via wells and then treat the soil vapor to remove the carbon tetrachloride. The treatment system adsorbs the carbon tetrachloride in granular-activated carbon (GAC) canisters.

4.0 SCOPE OF WORK AND POTENTIAL HAZARDS

The VES comprises two trailers and the GAC canisters. The first trailer contains the intake manifold, HEPA filters, vapor-liquid separator, and electrical controls. The second trailer contains the blower and exhaust stack and the piping leading to the GAC canisters located next to the blower trailer.

Activities that will be performed include: startup procedures will be prepared, routine maintenance (emptying water tank, replacement of instruments for calibration, source checking of continuous air monitors, and the changeout of HEPA filters), and sample collection.

4.1 CHEMICAL HAZARDS

The primary chemical of concern at the 216-Z-1A Tile Field is carbon tetrachloride. The disposal sites also contain other deposited organics such as tributyl phosphate, dibutylphosphate, and their degradation products (<30% by volume).

Carbon tetrachloride and its decomposition products (methylene chloride and chloroform) are volatile compounds that exhibit acute effects through inhalation. The American Conference of Governmental Industrial Hygienists lists each of these compounds as suspected carcinogens (ACGIH 1991).

4.2 RADIATION HAZARDS

Although plutonium and americium are present in the soils underlying the tile field, the characterization unit pulled no particulate radiation from the subsurface, as evidenced by analysis of the system components following the tests. Naturally occurring radon gas and its daughter products were detected in the extracted soil vapor. Radon and its daughter products are expected to be the primary radiation hazard of concern.

4.3 ASSESSMENT AND MITIGATION OF POTENTIAL HAZARDS

The likelihood of significant exposure (100 mR/h or greater) to external radiation is remote and can be readily monitored and controlled by limiting exposure time, increasing distance, and employing shielding as required. Appropriate respiratory protection, protective clothing, and decontamination procedures will be implemented as necessary to reduce potential inhalation, ingestion, and dermal exposure to acceptable levels.

Assessments of inhalation hazards from chemical exposures will be made as part of the HWOP. Dermal exposure to toxic chemical substances is not expected to pose a significant problem for the identified tasks given the use of the designated protective clothing. The appropriate level of personal protective clothing and respiratory protection will vary from work task to work task.

5.0 ENVIRONMENTAL AND PERSONAL MONITORING

The site safety officer or authorized delegate shall be present as necessary and shall be in charge of all environmental/personal monitoring equipment. Industrial Hygiene and Safety shall review all activities involving or potentially involving radiological exposure or contamination control and shall prescribe the appropriate level of technical support and/or monitoring requirements.

Monitoring of airborne radioactive contamination levels and external radiation levels will be conducted by the onsite health physics technician, when necessary. Action levels will be consistent with derived air concentrations and applicable guidelines as specified in the WHC radiation protection manual (WHC 1988b).

Appropriate respiratory protection shall be required when conditions are such that the airborne contamination levels may exceed an 8-hour derived air concentration (e.g., the presence of high levels of uncontrolled, loose contamination on exposed surfaces or operations that may raise excessive levels of dust contaminated with airborne radioactive materials, such as excavation or drilling under extremely dry conditions).

Specific conditions requiring the use of respiratory protection because of radioactive materials in air will be incorporated into the RWP. If, in the judgement of the health physics technician, any of these conditions arise, work shall cease until appropriate respiratory protection is provided.

6.0 PERSONAL PROTECTIVE EQUIPMENT

The level of personal protective equipment required initially at a site will be specified in the task specific HWOP. Personal protective clothing and respiratory protection shall be selected to limit exposure to anticipated chemical and radiological hazards. Work practices and engineering controls may be used to control exposure.

7.0 SITE CONTROL

The VES is located in a restricted area, which is roped off. Only authorized personnel are allowed to enter this area after meeting the requirements for training and medical surveillance. The GAC canisters that are being used and those that have been used are placed in a radiation control area, within the restricted area.

Control zone boundaries may be increased or decreased based on results of field monitoring, environmental changes, or work technique changes. The site RWP and the contractor's standard operating procedures for radiation protection may also dictate the boundary size and shape. All team members

must be surveyed for radioactive contamination when leaving the controlled zone if in a radiation zone.

No disturbances of the soils in the 216-Z-1A Tile Field may be performed. Operations that may impact the soils must first be cleared through Criticality Analysis.

8.0 DECONTAMINATION PROCEDURES

During site activities, potential sources of contamination may include airborne vapors, gases, dust, mists, and aerosols; splashes and spills; walking through contaminated areas; and handling contaminated equipment. Personnel who enter the exclusion zone may be required to go through the decontamination as determined by the site safety officer.

9.0 CONTINGENCY AND EMERGENCY RESPONSE PLANS

As a general rule, in the event of an unanticipated, potentially hazardous situation indicated by instrument readings, visible contamination, unusual or excessive odors, or other indications, team members shall temporarily cease operations and move upwind to a predesignated safe area as specified in the task-specific HWOP.

10.0 REFERENCES

ACGIH, 1991, *Threshold Limit Values and Biological Exposure Indices for 1990-1991*, American Conference of Governmental Industrial Hygienists, Cincinnati, Ohio.

WHC, 1988a, *Environmental Investigations and Site Characterization Manual*, WHC-CM-7-7, Westinghouse Hanford Company, Richland, Washington.

WHC, 1988b, *Radiation Protection*, WHC-CM-4-10, Westinghouse Hanford Company, Richland, Washington.

WHC, 1992, *Health and Safety for Hazardous Waste Field Operations*, WHC-CM-4-3 Vol. 4, Westinghouse Hanford Company, Richland, Washington.

APPENDIX C

PROJECT MANAGEMENT PLAN

9 2 1 5 0 3 0 3 5 2

CONTENTS

1.0 INTRODUCTION C-1
1.1 PURPOSE C-1
1.2 BACKGROUND C-1

2.0 PROJECT ORGANIZATION AND RESPONSIBIITIES C-1

3.0 INTERFACES C-6
3.1 AGGREGATE AREA MANAGEMENT STUDIES C-6
3.2 VOC-ARID ID C-6
3.3 GROUNDWATER MONITORING ACTIVITIES IN 200 WEST AREA C-6
3.4 WASTE DISPOSAL PERMITTING C-7
3.5 PLUTONIUM RECOVERY FACILITY EMISSIONS ABATEMENT FS C-7

4.0 DOCUMENTATION AND RECORDS C-7

5.0 FINANCIAL AND PROJCT TRACKING REQUIREMENTS C-7

6.0 MEETINGS AND PROGRESS REPORTS C-8

7.0 REFERENCES C-8

FIGURES:

C-1 Regulatory Interfaces C-2
C-2 200 West Area Carbon Tetrachloride ERA and VOC-Arid ID Operations Team C-4
C-3 VES Operations Organization C-5

THIS PAGE INTENTIONALLY
LEFT BLANK

1.0 INTRODUCTION

1.1 PURPOSE

The purpose of the project management plan is to define the administrative and institutional tasks necessary to support the design, operations and monitoring of the vapor extraction system (VES) as part of the 200 West Area Carbon Tetrachloride Expedited Response Action (ERA). The plan defines the responsibilities of the various participants, organizational structure, project tracking, and reporting.

1.2 BACKGROUND

The 200 West Area Carbon Tetrachloride ERA is being conducted by the U.S. Department of Energy (DOE) at the direction of the U.S. Environmental Protection Agency (EPA) and the Washington Department of Ecology (Ecology) as a provision of the Comprehensive Environmental Response, Compensation, and Liability Act of 1980 (CERCLA). An ERA allows expedited activities to be undertaken at waste sites where early remediation will abate imminent hazards or prevent significantly increased degradation that might occur if action were delayed until completion of a remedial investigation/feasibility study (RI/FS) and record of decision. The ERA is being initiated based on concerns that the carbon tetrachloride residing in the soils underlying the 200 West Area is continuing to serve as a source of contamination to the ground water. Thus, the purpose of the ERA is to minimize contaminant migration within the unsaturated soils in the 200 West Area by removing the carbon tetrachloride.

Based on results of a vapor extraction pilot test conducted in the spring of 1991 and an engineering evaluation/cost analysis, the EPA issued an Action Mêmo directing the initiation of the first phase of soil vapor extraction in the 200 West Area. The proposed action for removing the carbon tetrachloride in the unsaturated soils is to use soil vapor vacuum extraction with aboveground collection of the carbon tetrachloride on granulated-activated carbon, using a network of soil vapor extraction vadose wells. The activated carbon will be sent offsite to be regenerated and carbon tetrachloride destroyed.

2.0 PROJECT ORGANIZATION AND RESPONSIBILITIES

Figure C-1 shows the regulatory organizational interfaces for the 200 West Area Carbon Tetrachloride ERA. The ERA is conducted under the lead of the EPA per the Hanford Federal Facility Agreement and Consent Order (Tri-Party Agreement) (Ecology et al. 1989). The specific responsibilities of EPA, Ecology, and DOE are detailed in the Action Plan of the Tri-Party Agreement. Westinghouse Hanford Environmental Engineering Group is the technical lead for 200 Area operable units and any remedial actions.

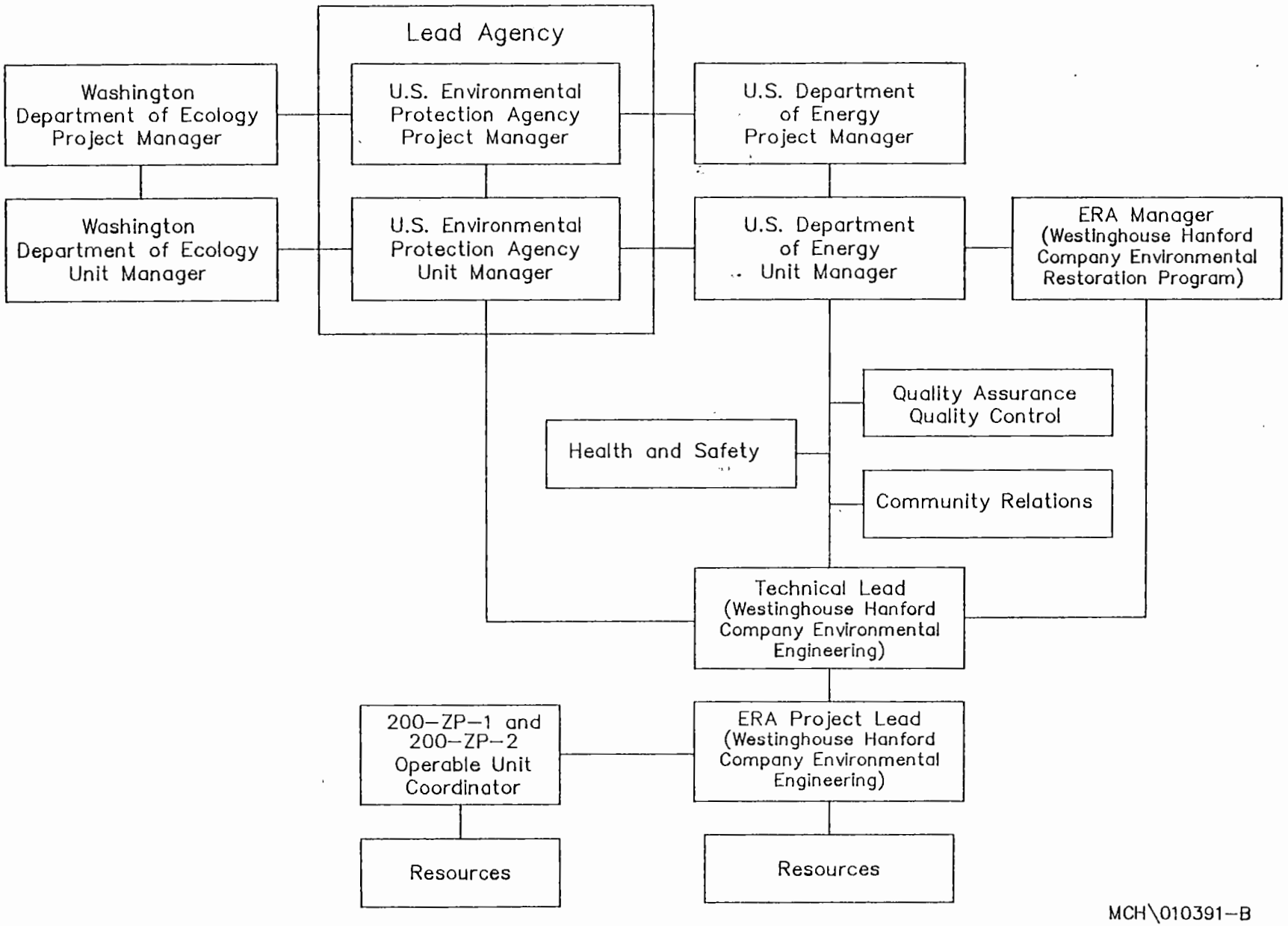

Figure C-1. Regulatory Interfaces.

The VES operations will be performed by a 200 West Area Carbon Tetrachloride ERA and Volatile Organic Compounds - Arid Integrated Demonstration (VOC-Arid ID) team (Figures C-2 and C-3), led by the Westinghouse Hanford Environmental Engineering Group. The ERA/VOC-Arid ID Operations Team is responsible for site characterization, VES engineering and operations, and regulatory and DOE/Westinghouse Hanford compliance. The principal organizations conducting these activities are:

- **Operations Management** - Westinghouse Hanford Environmental Engineering Group provides the project management lead and coordinates technical resources for the ERA and VOC-Arid ID.

- **Site Characterization/Well Field Evaluation** - Westinghouse Hanford Geosciences Groiup plans, manages, coordinates site characterization activities and VES well field evaluation.

- **Project Engineering** - Westinghouse Hanford Environmental Engineering Group is responsible for the overall design operations and monitoring of the VES and any associated safety assessments.

- **Field Services** - Westinghouse Hanford Environmental Field Services Group supports site characterization and project engineering needs in the field, including coordinating field activities as the field team leader for operations and monitoring of the VES.

- **Regulatory Analysis** - Pacific Northwest Laboratory and Westingyhouse Hanford Regulatory Analysis Group ensures regulatory compliance with federal, state, and local environmental requirements for characterization, operational, monitoring activities.

- **Quality Assurance** - Westinghouse Hanford Environmental Quality Assurance is responsible for coordinating and monitoring performance of the quality assurance project plan requirements by means of internal surveillance techniques and by auditing. Quality Assurance retains the necessary organizational independence and authority to identify conditions adverse to quality, and to inform the technical lead of needed corrective action.

- **Health and Safety** - Westinghouse Hanford Environmental Field Services Group is responsible for monitoring all potential health and safety hazards, including those associated with radioactive, volatile, and/or toxic compounds during sample handling and sampling decontamination activities. The health and safety officer has the responsibility and authority to halt field activities resulting from unacceptable health and safety hazards.

9 3 1 2 9 0 3 0 3 5 6

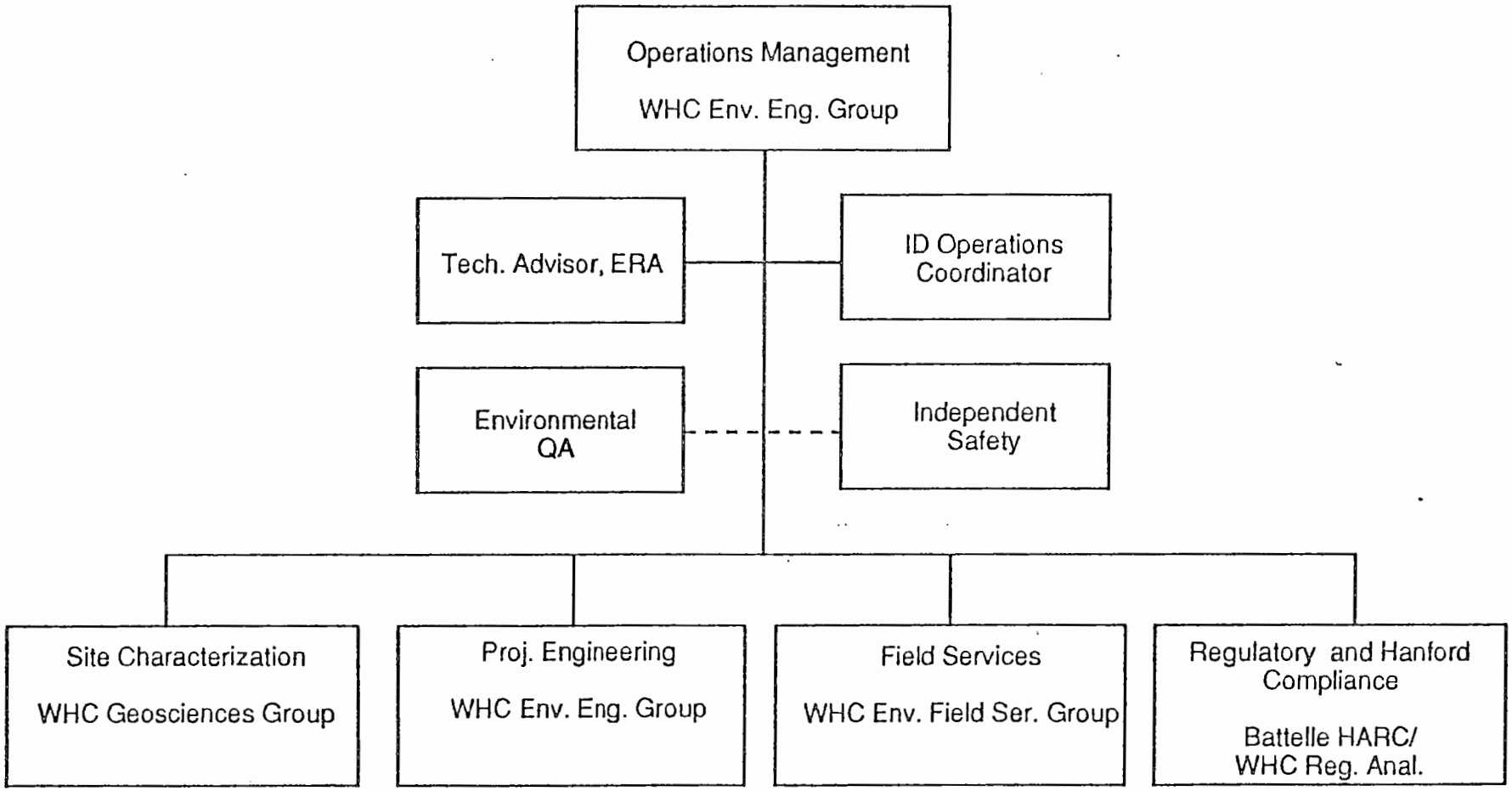

Figure C-2. 200 West Area Carbon Tetrachloride ERA and VOC-Arid ID Operations Team.

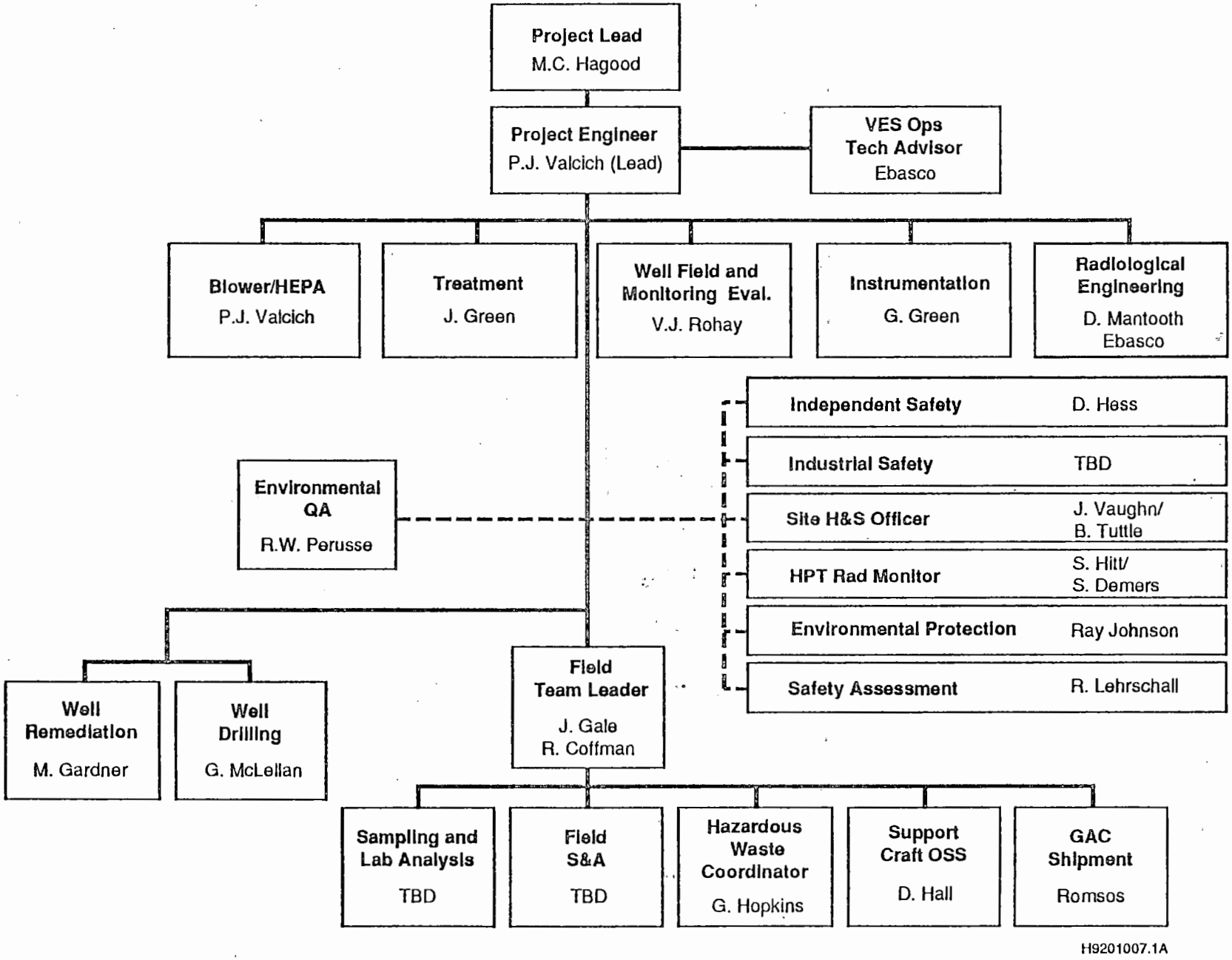

Figure C-3. VES Operations Team.

3.0 INTERFACES

3.1 AGGREGATE AREA MANAGEMENT STUDIES

The 200 West Area Carbon Tetrachloride ERA activities are to be conducted on inactive disposal sites located within the 200-ZP-1 and 200-ZP-2 operable units, which have not been initiated and do not presently have specific Westinghouse Hanford coordinators assigned. However, an aggregate area management study (AAMS) of Z Plant in the 200 West Area has been proposed to be conducted concurrently with the ERA. The purpose of conducting an AAMS is to compile and evaluate the existing body of knowledge and conduct limited field characterization work to support the Hanford Past-Practice Strategy (DOE-RL 1991). The primary objective of the strategy document was to develop a uniform streamlined process to meet statutory requirements with a "bias for action" by maximizing the use of existing data, integrating past practice with Resource Conservation and Recovery Act of 1976 (RCRA) treatment, storage, or disposal unit closure investigations, limiting and focusing the RI/FS process, and conducting expedited and interim actions where appropriate.

The interface between the AAMS and the ERA will be determined at a later date and will be reflected in a revision of this project management plan. A Westinghouse Hanford technical coordinator has been assigned for this project and will interface with the ERA project lead. The regulatory lead for the AAMS is EPA and is supported by Ecology.

3.2 VOC-ARID ID

Another supporting activity that affects the design and operation of the VES is components of the VOC-Arid ID. The VOC-Arid ID is one of several DOE integrated demonstrations designed to support the testing of emerging environmental management and restoration technologies. The principal objective of the VOC-Arid ID at the Hanford Site is to determine the viability of emerging technologies that can be used to remediate arid or semiarid sites containing VOC (e.g., carbon tetrachloride) with or without associated metal and radionuclides contamination. During the first few years, The VOC-Arid ID activities focus primarily on the carbon tetrachloride contamination and associated contaminants found in the 200 West Area.

3.3 GROUNDWATER MONITORING ACTIVITIES IN 200 WEST AREA

Presently, 12 RCRA groundwater monitoring projects are being conducted in the 200 West Area (DOE 1991). The RCRA projects are monitored under three programs: (1) a background monitoring program; (2) an indicator evaluation program; and (3) a groundwater quality assessment program.

The DOE Richland Field Office (RL) functions as the lead agency for these monitoring programs and Ecology is the lead regulatory agency. Westinghouse Hanford is managing these activities for RL.

9 3 1 2 9 0 3 0 3 5 9

Within the 200 West Area, three other groundwater monitoring programs are in operation. The PNL assesses the impacts of Hanford operations on the groundwater for the DOE. Independent of this an evaluation of water quality is conducted by Westinghouse Hanford to ensure compliance with DOE monitoring guidelines, to assess the performance of waste disposal and storage facilities, and to determine the impacts of operations on the groundwater (Serkowski and Jordan 1989). In addition, a survey of drinking water sources at Hanford conducted by the Hanford Environmental Health Foundations (Somers 1989).

3.4 WASTE DISPOSAL PERMITTING

Several characterization studies may be conducted in the 200 West Area in support of applying for state waste discharge permits for the 10 currently active effluent streams in the 200 West Area. As part of this process, characterization activities in the Z Plant area will be conducted in support of the evaluation of the 216-Z-20 Crib as the site for the continuing liquid discharge from the Plutonium Finishing Plant. By June 1995, an alternative disposal pond for nine of these effluents will be emplaced. Site characterization activities are also planned in support of the permit application for this new pond.

3.5 PLUTONIUM RECLAMATION FACILITIY EMISSIONS ABATEMENT FS

An engineering FS to determine the sources of carbon tetrachloride air emissions and means of mitigating these emissions from solvent extraction columns, and organic makeup and waste solution tanks in the Plutonium Reclamation Facility solvent extraction system is being conducted by Westinghouse Hanford.

4.0 DOCUMENTATION AND RECORDS

All records and reports related to the VES operations will be forwarded to the Westinghouse Hanford Environmental Engineering Group for inclusion in the project records to be maintained by the project lead in accordance with Environmental Investigations Instruction 1.6, Records Management (WHC 1988). Appropriate records will also be incorporated into an official administrative record file which is available for public review.

5.0 FINANCIAL AND PROJECT TRACKING REQUIREMENTS

Westinghouse Hanford Environmental Engineering Group will have the overall responsibility for planning and controlling the VES operations, providing effective technical, cost, and schedule baseline management. The management control system used for this project must meet the requirements of DOE Order 4700.1, *Project Management System* (DOE 1987), and DOE Order 2250.1B, *Cost and Schedule Control Systems Criteria for Contract Performance Measurement* (DOE 1985). The Westinghouse Hanford Management Control System

(MCS) meets these requirements. The primary goals of the Westinghouse Hanford MCS are to provide methods for planning, authorizing, and controlling work so that it can be completed on schedule and within budget, and to ensure that all planning and work performance activities are technically sound and in conformance with management and quality requirements.

The VES operation schedule and major milestones are presented in Chapter 6. The schedule will be the primary guidance for the regulators, DOE, and the technical lead to track the progress of the operations.

6.0 MEETINGS AND PROGRESS REPORTS

The regulators, DOE, and Westinghouse Hanford participate in open discussions during weekly meetings to resolve issues related to the status of the ERA. These meetings provide for a continuing dialogue with the regulators. The status of the IRA will continue to be presented at ongoing unit managers meetings concerning the IRA. In addition, reporting will be conducted quarterly and annually (see Section 5.0) on the VES operations.

7.0 REFERENCES

DOE-RL, 1991, CARBON TET PROPOSAL , DOE/RL-91-38

DOE-RL, 1991, *Hanford Past-Practice Strategy*, DOE/RL-91-40, Draft A, U.S. Department of Energy, Richland Operations, Richland, Washington.

Ecology et al. 1989, *Hanford Federal Facility Agreement and Consent Order*, Washington Department of Ecology, U.S. Environmental Protection Agency, U.S. Department of Energy, Olympia, Washington.

Serkowski and Jordan, 1989,

Somer, 1989,

WHC, 1988, *Environmental Investigations and Site Characterization Manual*, WHC-CM-7-7, Westinghouse Hanford Company, Richland, Washington.

Date Received: 3/25/93

INFORMATION RELEASE REQUEST

Reference: WHC-CM-3-4

Complete for all Types of Release

Purpose

[] Speech or Presentation
- [] Full Paper
- [] Summary
- [] Abstract
- [] Visual Aid

(Check only one suffix)

[] Speakers Bureau
[] Poster Session
[] Videotape

[] Reference
[X] Technical Report
[] Thesis or Dissertation
[] Manual
[] Brochure/Flier
[] Software/Database
[] Controlled Document
[] Other

ID Number (include revision, volume, etc.): WHC-SD-EN-TI-010, Rev. 1

List attachments.

Date Release Required: 3/15/93

Title: Design, Operation, and Monitoring of the Vapor Extraction System at the 216-Z-1A Tile Field

Unclassified Category: UC-

Impact Level: 3Q S

New or novel (patentable) subject matter? [X] No [] Yes
If "Yes": has disclosure been submitted by WHC or other company?
[] No [] Yes Disclosure No(s).

Information received from others in confidence, such as proprietary data, trade secrets, and/or inventions?
[X] No [] Yes (Identify)

Copyrights? [X] No [] Yes
If "Yes", has written permission been granted?
[] No [] Yes (Attach Permission)

Trademarks?
[X] No [] Yes (Identify)

Complete for Speech or Presentation

Title of Conference or Meeting: NA

Group or Society Sponsoring: NA

Date(s) of Conference or Meeting: NA

City/State: NA

Will proceedings be published? [] Yes [X] No
Will material be handed out? [] Yes [X] No

Title of Journal: NA

CHECKLIST FOR SIGNATORIES

Review Required per WHC-CM-3-4	Yes	No	Reviewer - Signature Indicates Approval: Name (printed)	Signature	Date
Classification/Unclassified Controlled Nuclear Information	[]	[X]			
Patent - General Counsel	[]	[X]	SW BERGEN		3/26/93
Legal - General Counsel	[X]	[]			
Applied Technology/Export Controlled Information or International Program	[]	[X]			
WHC Program/Project	[]	[X]			
Communications	[]	[X]			
RL Program/Project	[]	[X]			
Publication Services	[X]	[]	L.A. Brown		3/29/93
Other Program/Project	[]	[X]			

Information conforms to all applicable requirements. The above information is certified to be correct.

	Yes	No
References Available to Intended Audience	[X]	[]
Transmit to DOE-HQ/Office of Scientific and Technical Information	[]	[X]

Author/Requestor (Printed/Signature) Date
SA Driggers 3-19-93

Intended Audience
[] Internal [] Sponsor [X] External

Responsible Manager (Printed/Signature) Date
MC Hagood 3/19/93

INFORMATION RELEASE ADMINISTRATION APPROVAL STAMP

Stamp is required before release. Release is contingent upon resolution of mandatory comments.

APPROVED FOR RELEASE — OFFICIAL DOCUMENT — NS — Date 3/29/93

Date Cancelled | Date Disapproved

DISTRIBUTION SHEET

:	From:	Date:
stribution	S. A. Driggers	March 18, 1993

bject Title/Work Order:

sign, Operation, and Monitoring of the Vapor Extraction System at the 216-Z-1A Tile eld

T No.: ECN No.: 196005

Name	MSIN	With Attachment	EDT/ECN & Comment	EDT/ECN Only
T. Coffman	N3-05	X		
A. Driggers	H6-04	X		
N. Fisler	H6-04	X		
J. Gale	N3-05	X		
W. Green	H6-04	X		
C. Hagood	H6-04	X		
C. Havenor	N3-06	X		
R. Lehrschall	B1-35	X		
J. Millikin	H6-04	X		
J. Moak	N3-05	X		
L. Hand	H4-16	X		
J. Rohay	H6-06	X		
M. Smearman	H6-04	X		
B. Tullis	L6-57	X		
G. Tuttle	N3-06	X		
RC	H6-07	X		
DMC (2)	H6-08	X		
entral Files (2)	L8-04	X		