1249914
[0064908H]

ECF-Hanford-17-0128
Revision 0

Radiological and Toxic Air Emissions for the REDOX Complex

Prepared for the U.S. Department of Energy
Assistant Secretary for Environmental Management

Contractor for the U.S. Department of Energy
under Contract DE-AC06-08RL14788

P.O. Box 1600
Richland, Washington 99352

RECEIVED
AUG 16 2018
EDMC

Approved for Public Release;
Further Dissemination Unlimited

200-CR-1

45

ECF-Hanford-17-0128
Revision 0

Radiological and Toxic Air Emissions for the REDOX Complex

Date Published
May 2018

Prepared for the U.S. Department of Energy
Assistant Secretary for Environmental Management

Contractor for the U.S. Department of Energy
under Contract DE-AC06-08RL14788

P.O. Box 1600
Richland, Washington 99352

APPROVED
By Julia Raymer at 1:51 pm, May 29, 2018

Release Approval Date

RECEIVED
AUG 16 2018
EDMC

Approved for Public Release;
Further Dissemination Unlimited

TRADEMARK DISCLAIMER

Reference herein to any specific commercial product, process, or service by tradename, trademark, manufacturer, or otherwise, does not necessarily constitute or imply its endorsement, recommendation, or favoring by the United States Government or any agency thereof or its contractors or subcontractors.

This report has been reproduced from the best available copy.

Printed in the United States of America

ENVIRONMENTAL CALCULATION COVER PAGE

Section 1: Completed by the Responsible Manager

Project: KBO&PR

Date: 3/27/2018

Calculation Title & Description: Radiological and Toxic Air Emissions for the REDOX Complex

RELEASE / ISSUE

DATE: May 29, 2018 HANFORD RELEASE

Section 2: Completed by Preparer

Calculation No.: ECF-HANFORD-17-0128 **Revision No.:** 0

Revision History

Revision No.	Description	Date	Affected Pages ADD ROW
0	Initial Release		

Section 3: Completed by the Responsible Manager

Document Control:

Is the document intended to be controlled within the Document Management Control System (DMCS)? ☒ Yes ☐ No

Does document contain scientific and technical information intended for public use? ☒ Yes ☐ No

Does document contain controlled-use information? ☐ Yes ☒ No

Section 4: Document Review & Approval

	Name /Position	Signature	Date
Preparer:	Carolyn Ervin, Senior Env. Engineer	CEErvin	3/27/2018
Checker:	Kira Murray, Env. Scientist	Kira Murray	3/27/2018
Senior Reviewer:	Paul Karschnia	PKarschnia	3/27/18
Responsible Manager:	George Jackson	[illegible]	3/28/18

Section 5: Applicable if calculation is a risk assessment or uses an environmental model

PRIOR TO INITIATING MODELING:

Required training for modelers completed:

	Name /Position	Signature	Date
Integration Lead			

Safety Software Approved:

	Name /Position	Signature	Date
Integration Lead			

CALCULATION APPROVED:

	Name /Position	Signature	Date
Risk/Modeling Integration Manager:			

A-6005-812 (REV 5)

This page intentionally left blank.

Contents

1 Introduction 1

2 Background 2

2.1 202S Building 2

2.1.1 202S Canyon 3

2.1.2 202S Silo 6

2.1.3 202S Annex 6

2.2 276S Hexone Tanks 9

2.3 293S Building 10

2.4 Exhaust Ventilation System 10

3 Radiological Air Emissions 13

3.1 Assumptions and Inputs 13

3.1.1 Assumptions 13

3.1.2 Inputs 14

3.2 Methodology 17

3.2.1 Material-at-Risk 18

3.2.2 Potential-to-Emit 18

3.2.3 Dose to the Maximally Exposed Individual 18

3.3 Software Applications 19

3.4 Calculations 19

3.5 Radiological Air Emission Results 19

4 Criteria/Toxic Air Determination 24

5 References 26

Appendix

A Inventory Calculation for 276S Hexone Tanks ..... A-i

Figures

Figure 1. REDOX Complex Structures 1
Figure 2. 202S Building 3
Figure 3. 202S Building Cross Section West to East 4
Figure 4. 202S Building Cross Section North to South (Facing East) 5
Figure 5. 202S Silo Cross Sections 7
Figure 6. 202S Annex Plan View at the Pipe Gallery Level 8
Figure 7. 276S Hexone Storage Tanks and Ancillary Equipment 9
Figure 8. 293S Nitric Acid and Iodine Recovery Building – Plan View 11
Figure 9. REDOX Facility Air Flow Diagram 12

Tables

Table 1. 202S Building Inventory 14
Table 2. 276S Hexone Tank Inventory 16
Table 3. 202S Annex Floor Area 17
Table 4. PTE and TEDE to the MEI Calculation for the 291S001 Stack Point Source 20
Table 5. PTE and TEDE to the MEI Calculation for the REDOX Complex Diffuse and Fugitive 21
Table 6. TEDE to the MEI for the REDOX Complex Removal Action 22
Table 7. PTE and TEDE to the MEI Calculation for the 296S002 Stack Point Source 23
Table 8. Chemical Contaminants of Concern 24
Table 9. De Minimis Emission Values for REDOX Complex Chemicals 25

Terms

CF	conversion factor
CM	conservatism multiplier
dpm	disintegrations per minute
ECF	environmental calculation file
MAR	material-at-risk
MEI	maximally exposed individual
NESHAP	"National Emission Standards for Hazardous Air Pollutants" (40 CFR 61)
PTE	potential-to-emit
RAWP	removal action work plan
RCRA	*Resource Conservation and Recovery Act of 1976*
REDOX	Reduction-Oxidation
TEDE	total effective dose equivalent

This page intentionally left blank.

1 Introduction

This environmental calculation file (ECF) provides air emission estimates to support a non-time-critical removal action at the Reduction-Oxidation (REDOX) Complex, located in the 200 West Area. This ECF supports the current removal action scope as defined in DOE/RL-2017-06, *Removal Action Work Plan for the REDOX Complex*, Decisional Draft (hereinafter called the REDOX Removal Action Work Plan [RAWP]). The removal activities outlined in the REDOX RAWP implement DOE/RL-2016-52, *Action Memorandum for the REDOX Complex*, Draft A. Additional removal actions deemed necessary by DOE-RL to protect human health and the environment may be identified in the future. This ECF also supports future removal activities as they are bounded within the scope of this calculation.

The ECF summarizes the assumptions, inputs, and methodology used to calculate the potential-to-emit (PTE) radionuclide airborne emissions and the total effective dose equivalent (TEDE) to the maximally exposed individual (MEI). These results will be used to support the preparation of an air monitoring plan. This ECF also documents the determination of criteria/toxic air emissions resulting from this removal action.

The REDOX Complex structures addressed in this removal action are the 202S Building, the 293S Nitric Acid and Iodine Recovery Building (293S Building), and waste management from closure of the *Resource Conservation and Recovery Act of 1976* (RCRA) 276S Hexone Storage and Treatment Facility, shown in Figure 1. The closest operational building is the 222S Laboratory and associated support structures. These structures are not included in the scope of this removal action.

Figure 1. REDOX Complex Structures

The current removal action for the REDOX Complex, as described in the REDOX RAWP (DOE/RL-2017-06, Decisional Draft), includes the following activities:

- Continued surveillance and maintenance of the REDOX Complex
- Hazard abatement[1] of the 202S Canyon Galleries
- Demolition preparation[2] of the 202S Silo Service Area, 202S Annex, and abovegrade areas of the 202S Canyon
- Demolition of the 293S Building, the 276S Hexone Storage Tanks, and the 202S Annex
- Grouting of belowgrade areas of the 293S Building

Accessing the canyon process cells is not included in the scope of this removal action; however, the potential exists for these areas to be disturbed in future removal actions. The removal action also includes characterization of remaining hazardous substances to facilitate demolition and waste disposal, determine worker controls, as well as to document post-removal conditions for a future remedial action. Characterization activities will be performed in accordance with DOE/RL-2017-05, *Sampling and Analysis Plan for the REDOX Complex*, Draft B. These activities have the potential to result in radiological and/or chemical emissions.

2 Background

This chapter provides brief descriptions and past deactivation activities for the structures associated with the removal action at the REDOX Complex. Removal activities, as currently defined in the REDOX RAWP (DOE/RL-2017-06), for each structure are also identified. The Exhaust Ventilation System is discussed as it may be modified to support the removal activities. Additional information on these structures can be found in the REDOX RAWP.

2.1 202S Building

The 202S Canyon Building (REDOX), also known as S Plant, was constructed between 1950 and 1952 and began operations in 1952. It was the first large-scale, continuous-flow, solvent extraction process plant in the United States. The 202S Building and support buildings were designed to separate uranium, plutonium, and neptunium as individual product streams from fission products in the irradiated fuel. The building consists of three major substructures: canyon, silo, and annex, displayed in Figure 2. The canyon and silo are large, heavily shielded metal and concrete structures. The annex is a concrete structure with three subsections: North, Southwest, and East. Figure 3 and Figure 4 provide cross-sectional views of the 202S Building along the west-east and north-south building axes.

Shutdown activities began in 1967 and were completed in 1969 (HNF-13830, *Documented Safety Analysis for the Reduction-Oxidation Facility*). Initial deactivation included multiple flushes using water, diluted hot nitric acid, permanganate, and oxalic acid. The facility piping systems and vessels were then systematically flushed regularly with water for nearly a year thereafter to remove additional contaminants and decontamination fluids (ISO-1108, *REDOX Deactivation Manual*). After deactivation, the REDOX Complex was transferred to long-term surveillance and maintenance status.

[1] Hazard abatement is proactive hazard mitigation by decontamination, stabilization (e.g., applying fixatives), or equipment removal.

[2] Demolition preparation, preceded by hazard abatement, is a more aggressive removal of hazards and equipment.

Figure 2. 202S Building

2.1.1 202S Canyon

The 202S Canyon is a large, multistory, concrete structure with reinforced concrete walls. The building is 468 ft long, 161 ft wide, and 83 ft high with 60 ft abovegrade. The canyon, which lies on an east-west axis, contains all the equipment for dissolving fuel elements, preparing radioactive column feeds, distilling solvents, concentrating and neutralizing waste, separating uranium, plutonium, and neptunium as product streams from fission products, and treating process gaseous wastes. Abovegrade areas include the Canyon Deck, North and South Pipe Galleries, North and South Operating Galleries, and the south Crane Cab Gallery. Approximately one-fourth of the building is constructed belowgrade, with processes performed in process cells located below the Canyon Deck for shielding purposes, shown in Figure 4. Belowgrade areas include the North and South Sample Galleries and the south Storage Gallery. The East End Rooms, located at the east end of the canyon, are a maintenance area consisting of a Special Work Permit Lobby (used as a central staging area) and the Remote Shop, Decontamination Room, and Regulated Shop. The process cells, Hot Pipe Trench, and Wind Tunnel (Figure 4) are not included in the removal action scope.

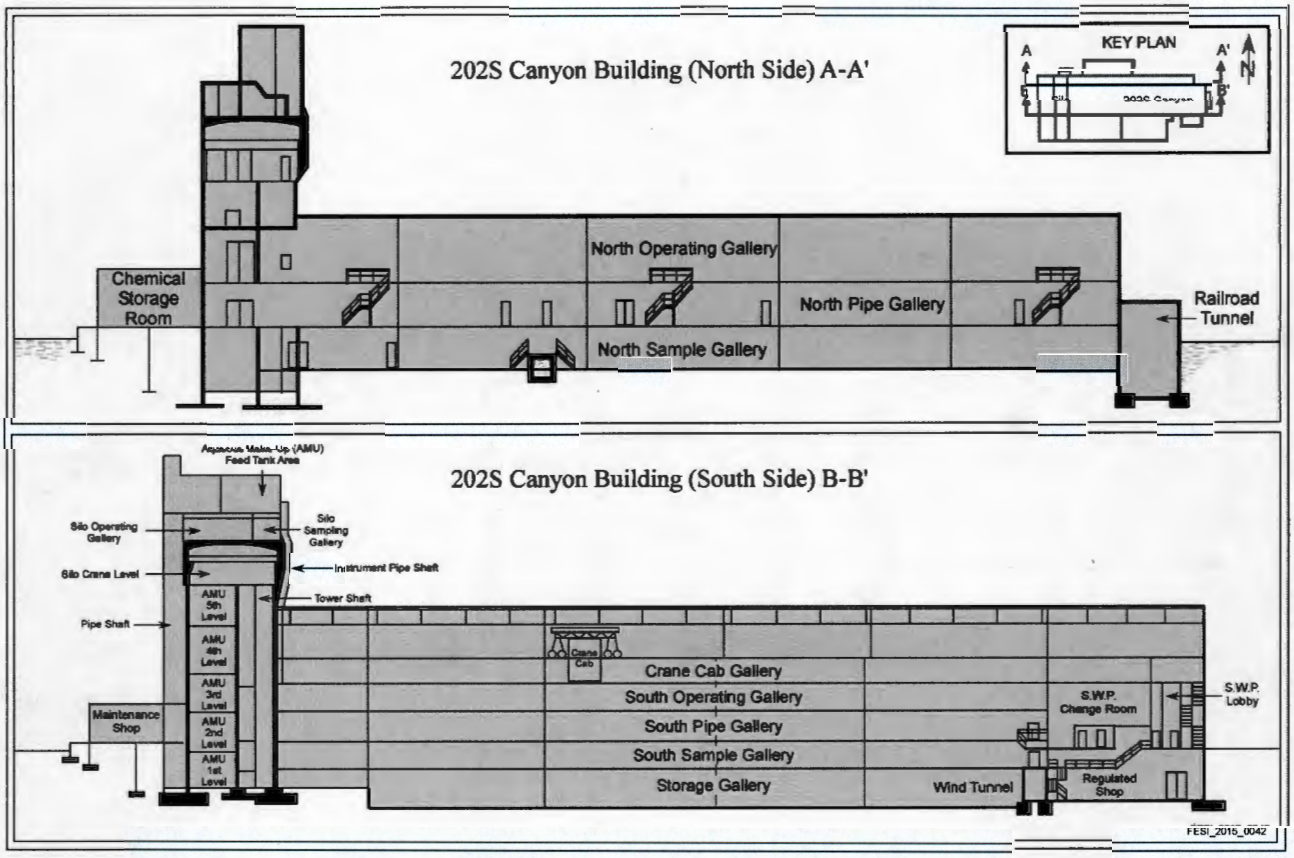

Figure 3. 202S Building Cross Section West to East

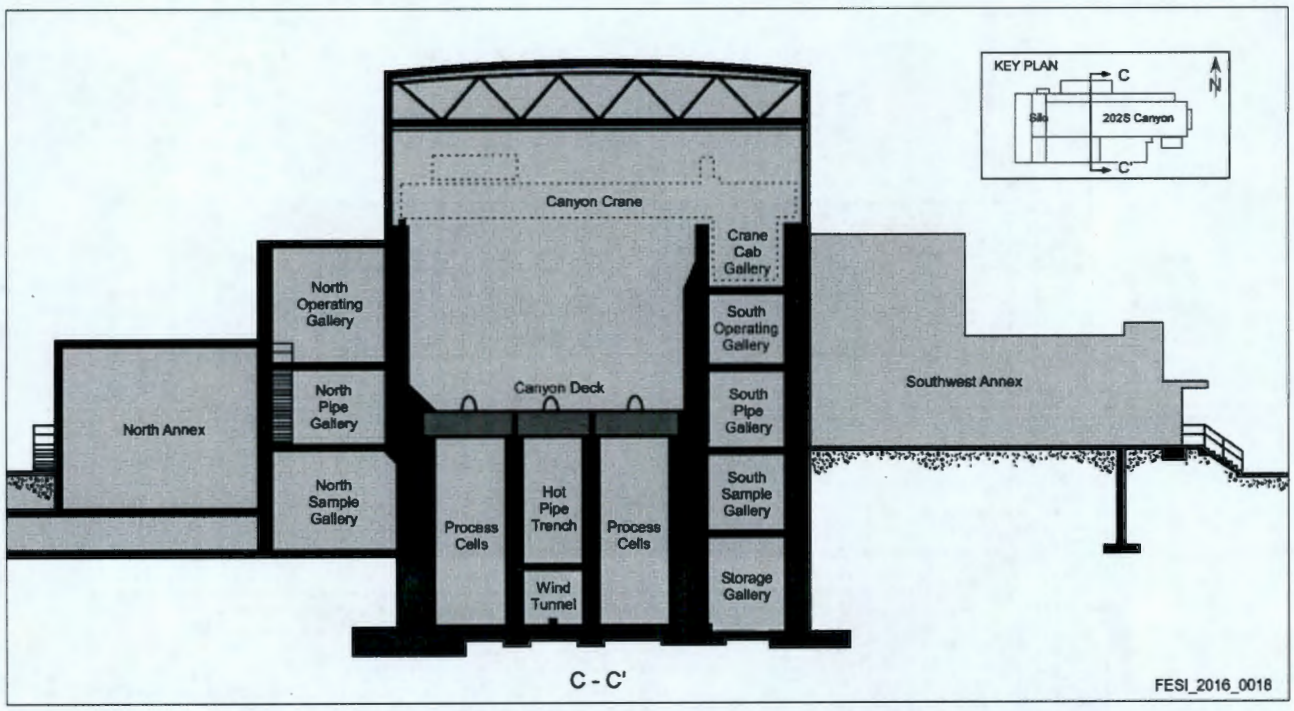

Figure 4. 202S Building Cross Section North to South (Facing East)

The Plutonium Loadout Hood, also referred to as the Product Receiver Cage, is located at the west end of the North Sample Gallery. The hood was used to concentrate the plutonium product solution prior to shipment. The Plutonium Loadout Hood operated from 1951 to 1955. During operations, plutonium solutions from separation activities were transferred to the hood. The solutions were then concentrated and loaded out as a liquid plutonium nitrate product. In 1955, the system was deactivated as operations in the hood ceased because improved capabilities were provided by the 233S Plutonium Concentration Facility (demolished in 2004). The hood was serviced by a dedicated ventilation system including the 296S002 Stack that is no longer active. Currently, minimal ventilation to the hood is supplied by the 291S Exhaust System (Section 2.4) through the vessel ventilation header which results in a slight negative pressure differential when compared to the North Sample Gallery.

Under the current removal action, hazard abatement will occur in the belowgrade galleries, including removal of the Plutonium Loadout Hood and its contents. Demolition preparation will occur in the abovegrade galleries (Pipe, Operating, and Crane Cab), including the Canyon Deck. The process cells, Wind Tunnel, Waste Line Tunnel, and Hot Pipe Trench are outside the scope of the removal action. However, the inventories in these areas are included in this PTE calculation to encompass future removal activities.

2.1.2 202S Silo

The Silo is an eight-story structure located at the west end of the 202S Building. The Silo houses solvent-extraction columns and aqueous makeup unit vessels. The silo is 84 ft long, 41 ft wide, and 132 ft high, with 117 ft abovegrade, illustrated in Figure 5. The silo is segregated into two parts: Silo Service Area (operating area) and Silo Tower Shaft (process area). The Silo Service Area has eight levels—the first five are aqueous makeup unit levels, and the sixth level is occupied by the Silo Crane. The Silo Operating Gallery and Sample Gallery are on the seventh level. The eighth level contains the Blower Room and Feed Tank Area. Silo Service Area vessels and piping were flushed with demineralized water during deactivation in the 1960s. Some existing silo equipment was reactivated in the 1970s and 1980s to support operating several test assemblies.

In-scope areas of the Silo will undergo demolition preparation. These areas include levels one through five, seven, and eight. The Silo Crane Level, Silo Tower Shaft, and Column Laydown Trench are not included in the removal action scope. However, the inventories in these areas are included in this PTE calculation to encompass future removal activities.

2.1.3 202S Annex

The 202S Annex is separated from the main Canyon structure by a massive concrete wall. Three annexes, shown in Figure 6, comprise the REDOX Annex: North, Southwest, and East. These areas contain offices, administrative support areas, maintenance shops, and equipment rooms for ventilation and electrical components. Historically, they are slightly contaminated due to cross-contamination vectors. The annex buildings were part of the original construction of the 202S Building.

The 202S Annex will be demolished to grade, and the belowgrade areas will be backfilled to grade and contoured. Demolition of the 202S Annex includes removal of previously isolated ventilation ducting from the Southwest Annex to the 202S Canyon.

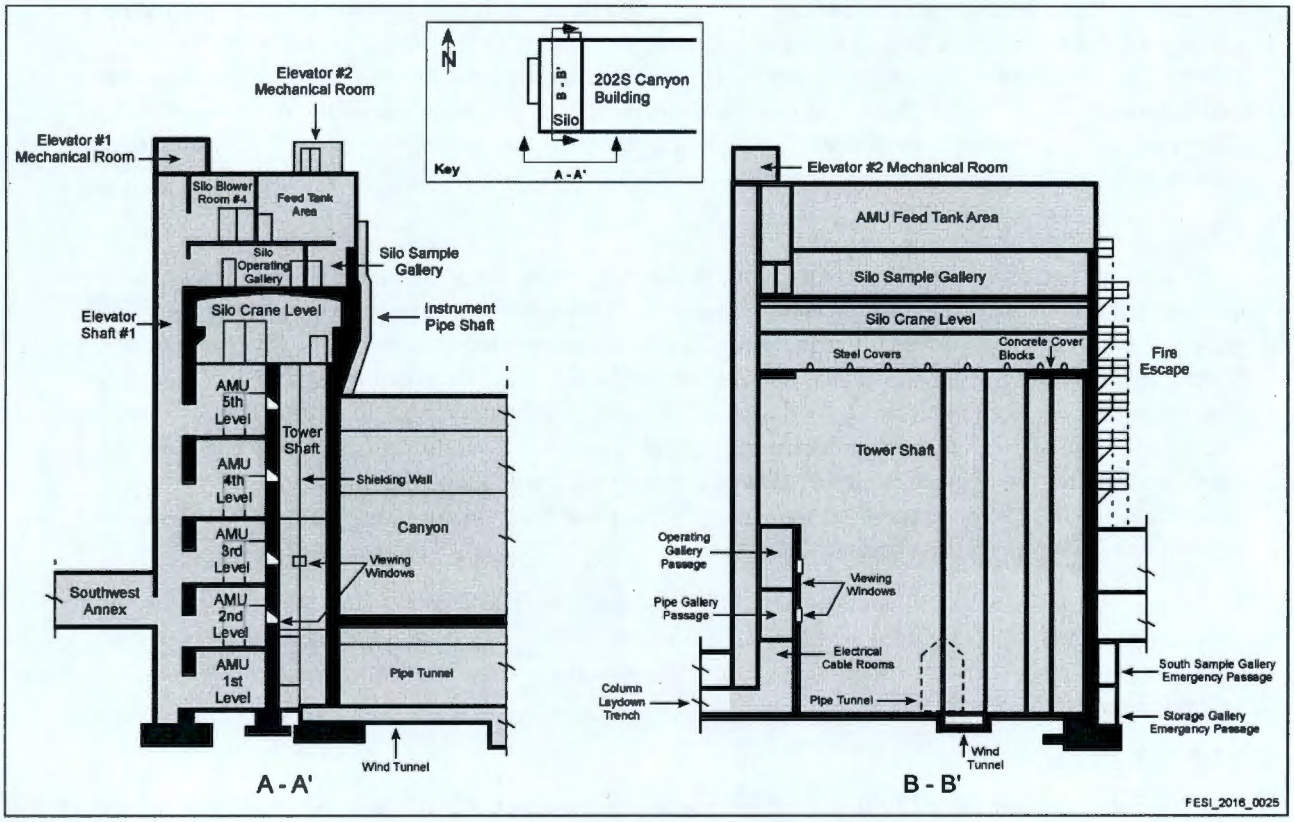

Figure 5. 202S Silo Cross Sections

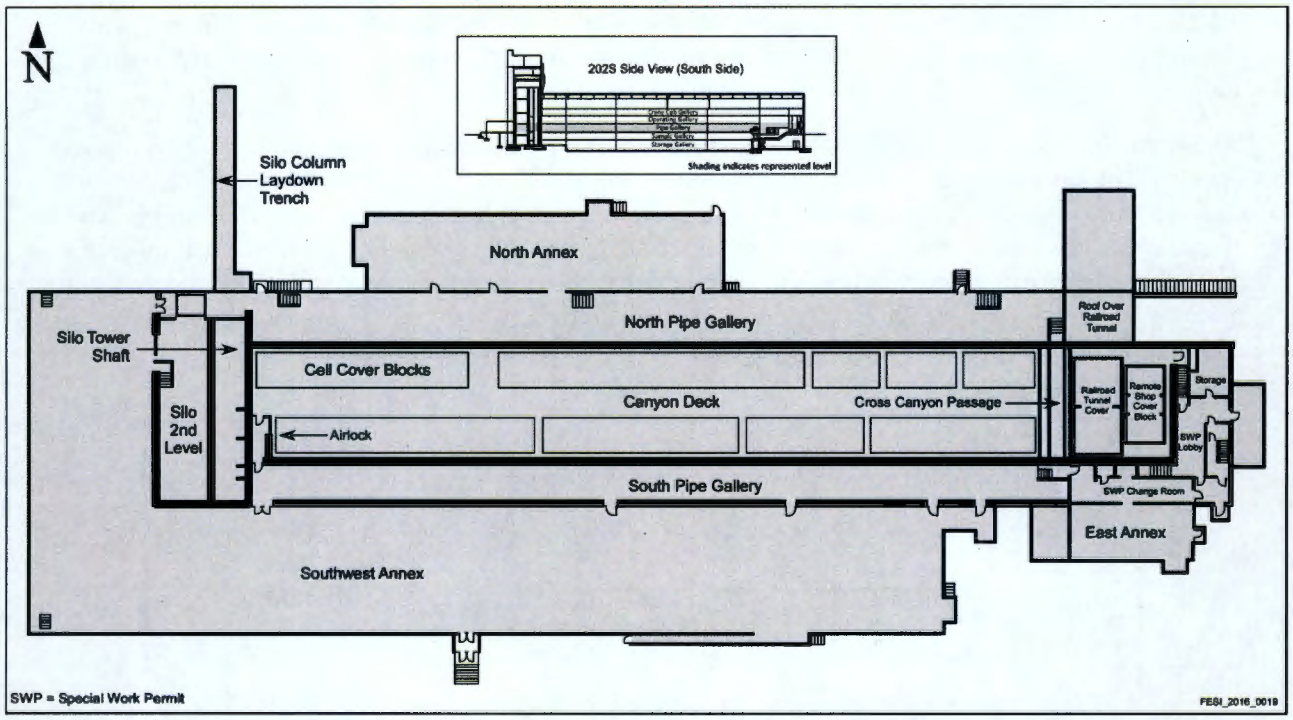

Figure 6. 202S Annex Plan View at the Pipe Gallery Level

2.2 276S Hexone Tanks

Two hexone tanks (276S141 and 276S142) are located underground north of the 276S Building. These single-shell, carbon steel storage tanks each have a capacity of 24,000 gal and were formerly used to store makeup solvent for the REDOX Complex (Figure 7). These tanks and associated ancillary components were permitted under RCRA as the 276S Hexone Storage and Treatment Facility treatment, storage, and disposal unit (TS-2-2). From 1990 through 1992, a combined 35,000 gal of the solvent remaining in the tanks was recovered, distilled, and then transported and incinerated at an offsite location, as discussed in WHC-EP-0570, *The Distillation and Incineration of 132,000 Liters (35,000 Gallons) of Mixed-Waste Hexone Solvents from Hanford's REDOX Plant.*

An estimated 130 gal of residual sludge remains in each tank from the distillation process. Results of sampling of the sludge in 2001 are documented in BHI-01521, *Evaluation of Alternatives for the Interim Stabilization of the Hexone Tanks*, Draft B. Primary radiological contaminants are total strontium, Pu-238, Pu-239/240, and Am-241. There are low levels of Cs-137 in the sludge compared to assays of waste from 276S, suggesting that the hexone was treated at some point (prior to distillation) to remove cesium.

The remaining void space in the tanks was grouted in 2002 (BHI-01142, *REDOX Facility Safety Analysis Report*). The tanks were left in place, pending final removal, as specified in DOE/RL-2009-112, *Hexone Storage and Treatment Facility Closure Plan*. The closure plan proposes that the treatment, storage, and disposal unit be clean closed by complete removal of the tanks and surrounding contaminated soil. Soil beneath the tanks and piping will be clean closed through visual inspections and soil verification sampling in accordance with DOE/RL-2009-116, *Sampling and Analysis Plan for the Hexone Storage and Treatment Facility Closure Plan*. Waste generated from this RCRA clean closure activity will be disposed under this removal action.

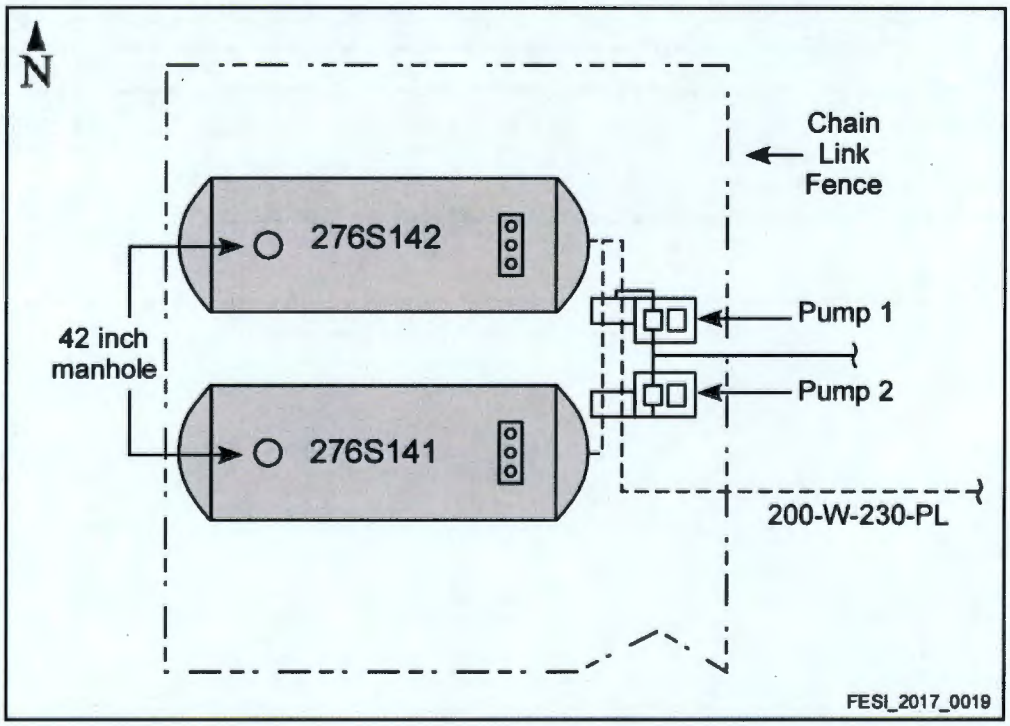

Figure 7. 276S Hexone Storage Tanks and Ancillary Equipment

2.3 293S Building

The 293S Building was built in 1957 after REDOX operations began. The 293S Building was put into operation to provide more efficient radioactive iodine removal and nitric acid recovery from offgases generated by the 202S Building dissolvers located in three of the canyon cells. The acid fumes were captured in a nitric acid absorber, and radioactive iodine was removed using a caustic scrubber system. The recovered nitric acid was stored in a belowgrade stainless steel storage tank (10 ft high by 10 ft in diameter) on the west side of the basement. The nitric acid tank is accessed via a removable slab at grade.

The two-story 293S Building was constructed of steel and concrete with a corrugated asbestos-cement (transite) exterior siding. The concrete basement houses control piping and a valve pit (Figure 8). The concrete portion of the ground level houses the absorber and scrubber and is 29 ft long by 16 ft wide, extending to 30 ft abovegrade. Attached to the south side of the building is a 10 ft tall steel and transite structure containing a Control Room and Special Work Permit Area.

The 293S Building was deactivated in 1969 in conjunction with deactivation of the 202S Building. The vessels (absorber and scrubber) and piping were drained and blown with air during shutdown, as necessary to prevent freezing (ISO-1108). Therefore, only trace residuals are expected. The belowgrade nitric acid storage tank is documented as being empty (HNF-13830). Following removal of all building equipment (including the belowgrade nitric acid storage tank) and demolition of the abovegrade structure, belowgrade areas of the 293S Building will be grouted.

2.4 Exhaust Ventilation System

The original ventilation system for the 202S Building relied on several supply and exhaust fans, most of which have been deactivated (Figure 9). The 291S Exhaust System provides filtration of radiological particulates before the air is exhausted to the environment. The system consists of the following four main components: Wind Tunnel (in the 202S Canyon), two exhaust fans (EF-1 and EF-2), 291S Sand Filter, and the 291S001 Exhaust Stack. The 291S001 flow path provides most of the ventilation for the 202S Building. Air passively flows into the galleries and other areas (e.g., Plutonium Loadout Hood, East End Rooms), then into the Canyon cells and Wind Tunnel and through the 291S Sand Filter before exhausting out the 291S001 Stack.

The 296S002 Stack was used to ventilate the Plutonium Loadout Hood during the operational years. This stack will be reactivated to support removal activities associated with the Plutonium Loadout Hood in the North Sample Gallery.

Inactive Stacks 296S001, 296S002, and 296S004 are mounted to the exterior of the 202S Canyon (i.e., not attached to an annex structure) and are not associated with the current ventilation system. Inactive Stack 296S006, also not associated with the current ventilation system, exits out of the northern end of the 202S Silo roof. Therefore, it is assumed that these four ventilation stacks are not included as part of the demolition of the 202S Annex.

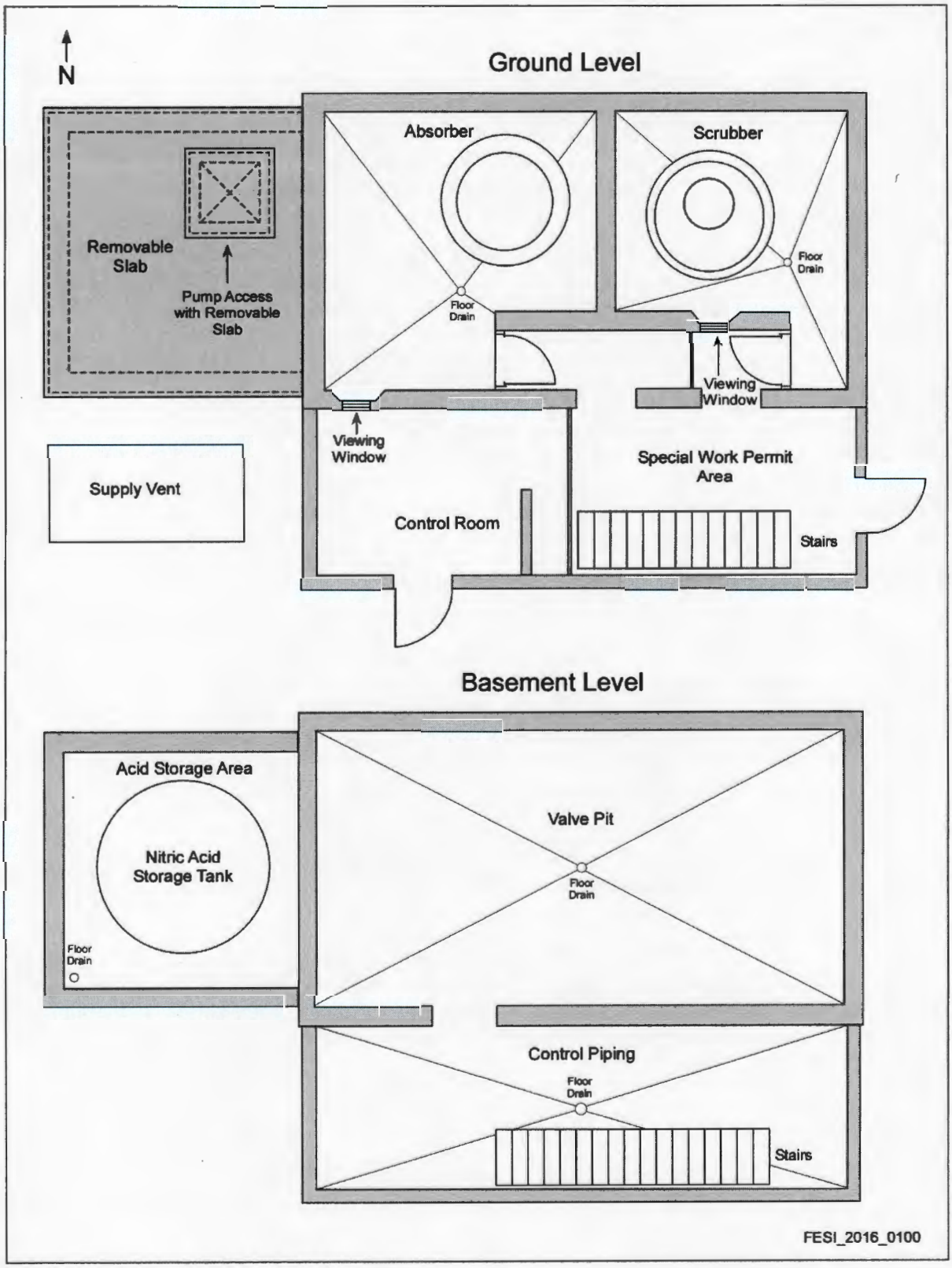

Figure 8. 293S Nitric Acid and Iodine Recovery Building – Plan View

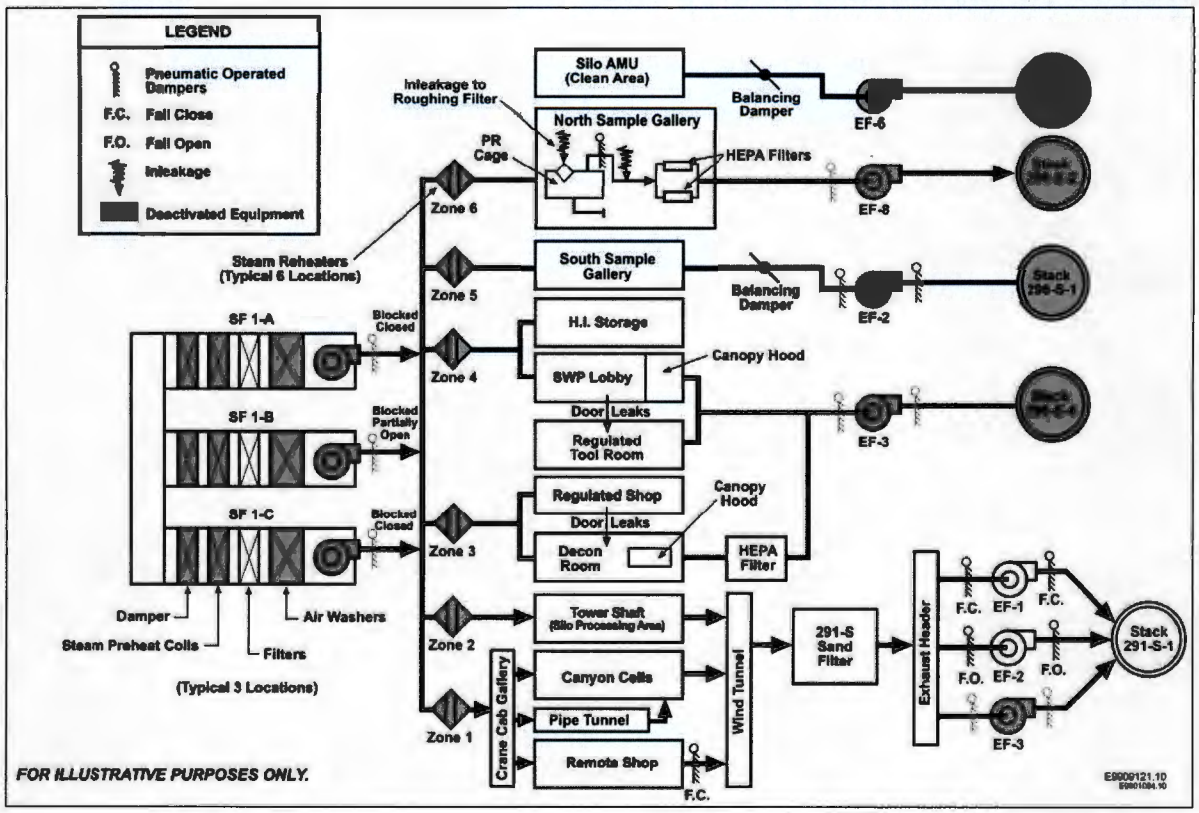

Reference: HNF-13830, *Documented Safety Analysis for the Reduction-Oxidation Facility.*

Figure 9. REDOX Facility Air Flow Diagram

3 Radiological Air Emissions

The potential for radiological release exists at the REDOX Complex. The state implementing regulations (WAC 246-247, "Radiation Protection—Air Emissions") address potential radioactive airborne emissions from point, fugitive, or diffuse sources that require monitoring. The 291S001 Stack is currently part of the Hanford Site Air Operating Permit, but will transition to regulation under the CERCLA authority after approval of the action memorandum (DOE/RL-2016-52, Draft A) and REDOX RAWP (DOE/RL-2017-06). The 296S002 Stack, when reactivated, would be operated under the CERCLA authority.

Potential radiological releases from the REDOX Complex removal action would be considered point source (291S001 and 296S002 Stacks) and diffuse and fugitive emissions (276S, 293S, and 202S Annex). The Hanford Site Environmental Monitoring Plan, which serves as the monitoring system for all site activities, is described in DOE/RL-91-50, *Hanford Site Environmental Monitoring Plan.*

The methodology used to estimate the potential radiological PTE for both the point sources and diffuse and fugitive sources created by the REDOX Complex removal action is based upon the guidance document DOE/RL-2006-29, Rev. 2, *Calculating Potential-to-Emit Radiological Releases and Doses.* Airborne emissions control and monitoring requirements for radiological air emissions will be identified, as needed, in the REDOX RAWP (DOE/RL-2017-06) and an air monitoring plan based on the calculated value of the potential emissions and resultant public exposure.

3.1 Assumptions and Inputs

This section provides the assumptions and inputs used to calculate PTE and the TEDE to the onsite and offsite MEI associated with the REDOX Complex removal action. The assumptions and inputs are derived from site features, physical parameters, sample results, and historical data.

3.1.1 Assumptions

This section contains the assumptions used in the calculations. General assumptions apply to both point source and diffuse and fugitive emission calculations.

3.1.1.1 General

1. The removal activities described in the REDOX RAWP (DOE/RL-2017-06) will be conducted over multiple years. It is assumed, for conservatism, that the entire material-at-risk (MAR) of the 202S Building, 293S Building, and 276S Hexone Storage Tanks is available for release within a 1-year period.

2. The use of Sr-90 for beta inventory is conservative in radiological consequence calculation purposes. However, Cs-137 is used for the beta inventory in the PTE and MEI calculations as it has a higher dose-per-unit-release factor compared to Sr-90. Pu-239/240 is used for the alpha inventory.

3.1.1.2 Point Source

1. Currently, most contaminated areas within the 202S Building are ventilated through the 291S001 Stack. Mitigation activities (e.g., vessel and pipe removals) within the 202S Silo and in the 202S Canyon galleries (including the Canyon Deck) will generate emissions through the 291S001 Stack. Current and future removal actions activities have the potential to disturb the entire 202S Building inventory including the below grade galleries and process cells.

2. Emissions from removal of the Plutonium Loadout Hood will be routed through the 296S002 Stack using a temporary exhauster. The 296S002 Stack will be reactivated; however, point source emissions from this stack would not increase the overall PTE, but would be a subset of the 291S001 Stack point source emissions, albeit through a different path.

3.1.1.3 Diffuse and Fugitive

1. Emissions from the following activities are assumed to be diffuse and fugitive:
   a. Removal of the 276S Hexone Storage Tanks and associated equipment
   b. Demolition and grouting of the 293S Building
   c. Demolition of the 202S Annex

3.1.2 Inputs

This section identifies inputs to the calculations. General inputs apply to both point source and diffuse and fugitive emission calculations.

3.1.2.1 General

1. The radionuclides of concern are particulate solids; therefore, a release fraction of 1.0E-03 is used in accordance with WAC 246-247-030(21)(a), "Definitions," as amended, and 40 CFR 61, "National Emission Standards for Hazardous Air Pollutants" (NESHAP), Appendix D, "Methods for Estimating Radionuclide Emissions."

3.1.2.2 Point Source

1. Table 1 contains the radiological inventory values for the 202S Building that were obtained from the REDOX safety analysis (Table 3-4 in HNF-13830). The remaining areas of the 202S Building that are not identified in Table 1 are included in the inventory estimate for the Canyon. Due to the intrusive nature of the removal activities in the 202S Building, the inventory used for calculating the 291S001 Stack point source emissions will be the summation of the inventories identified in Table 1. This total inventory will conservatively bound the removal activities in the 202S Building, either currently identified in the REDOX RAWP (DOE/RL-2017-06) or in future removal action.

Table 1. 202S Building Inventory

Location	Inventory	Remarks in HNF-13830
202S Canyon Building (including Silo, railroad tunnel, process cells, piping, equipment, and ancillaries)	1,500 Ci alpha 4,500 Ci beta	Based on historical published data (SD-DD-FL-001), the basis is unknown. Based on review of deactivation records (FH-0400890), the distribution of the residual contamination in the Canyon process area is approximately 46% in vessel piping, 44% surface contamination in Canyon cells, and 10% surface contamination in the Silo and Column Laydown Trench. Conservative assumption is that all alpha is Pu-239 and all fission products are bounded by beta assumed as Sr-90.* Being that SD-DD-FL-001 is dated 1982 and 35 years have passed, the beta source term has been reduced by one half-life (Sr-90 half-life = 28.8 years; Cs-137 half-life = 30.2 years).

Table 1. 202S Building Inventory

Location	Inventory	Remarks in HNF-13830
202S North Sample Gallery (including the Plutonium Loadout Hood)	140 Ci alpha 840 Ci beta	Inventory basis as established in BHI-01142. Conservative assumption is that all alpha is Pu-239 and all fission products are bounded by beta assumed as Sr-90.*
291S Sand Filter	340 Ci alpha 8,000 Ci beta	Estimated inventory based on stack emission data and assumed sand filter efficiency of 99.95%. Conservative assumption is that all alpha is Pu-239 and all fission products are bounded by beta assumed as Sr-90.*

References: BHI-01142, *REDOX Facility Safety Analysis Report*. FH-0400890, *REDOX Facility Safety Analysis Report Addendum Submittal*.

HNF-13830, *Documented Safety Analysis for the Reduction-Oxidation Facility*.

SD-DD-FL-001, *Rockwell Retired Contaminated Facility Listing and Description*.

*These assumptions are conservative for radiological consequence calculation purposes in that Pu-239 and Sr-90 have the largest dose conversion factors of the radionuclides potentially present in significant quantities (HNF-13830).

2. The inventory for the 202S North Sample Gallery from the REDOX safety analysis (Table 1) is used as the MAR for the 296S002 Stack point source emissions. This inventory includes the Plutonium Loadout Hood and piping outside the hood but in the gallery (e.g., the H4 Transfer Line).

3. No conservatism multipliers (CMs) will be applied to the REDOX safety analysis inventory values.

4. The dose factors for the 291S001 Stack point source emissions are taken from DOE/RL-2006-29 (Rev. 2), Table 4.5, with an effective release height of greater than 40 m (131 ft) based on the height of the stack (200 ft) and its location within the 200 West Area. The dose-per-unit-release factors include the parent isotope and its radioactive decay products (+D), in accordance with Section 3.2.3 of DOE/RL-2006-29 (Rev. 2).

5. The dose factors for the 296S002 Stack point source emissions are taken from DOE/RL-2006-29 (Rev. 2), Table 4.5, with an effective release height of less than 40 m (131 ft) based on a stack height of 50 ft, and its location within the 200 West Area. The dose-per-unit-release factors include the parent isotope and its radioactive decay products (+D), in accordance with Section 3.2.3 of DOE/RL-2006-29 (Rev. 2).

3.1.2.3 Diffuse and Fugitive

1. Table 2 presents the inventory for the 276S141 and 276S142 hexone tanks. Values in Table 2 are calculated from results of samples taken in 2001 of the remaining sludge in the tanks prior to grouting (presented in Appendix A). Sample results are documented in BHI-01521 (Draft B). To calculate the MAR for the 276S hexone tanks, the inventory values in Table 2 are conservatively multiplied by 1.5 (resulting in a 50% increase) to account for incidental material that may be disturbed during excavation of the tanks.

Table 2. 276S Hexone Tank Inventory

Isotope	276S141 Inventory[a] (Ci)	276S142 Inventory[b] (Ci)	Total Inventory (Ci)
Total Strontium (assume all Sr-90)	7.92E-04	1.28E-02	1.35E-02
Pu-238	2.55E-03	8.03E-03	1.06E-02
Pu-239/240	3.47E-03	1.17E-02	1.52E-02
Am-241	6.43E-03	2.81E-02	3.45E-02

a. Values from Table A-2.

b. Values from Table A-3.

2. The documented inventory for the 293S Building is 1 Ci alpha and 4 Ci beta (SD-DD-FL-001, *Rockwell Retired Contaminated Facility Listing and Description*). The basis of these values is unknown and it is unclear if this includes the inventory of the belowgrade tank that is to be removed. It is conservatively assumed that all alpha is Pu-239/240 and all beta is Cs-137 as they have the highest dose factors. Radioactive iodine associated with the processes at the 293S Building would have long since decayed. The assumed MAR for the 293S Building and the associated belowgrade tank is the values from SD-DD-FL-001 conservatively multiplied by 4 to account for uncertainty in the basis of the values and the inclusion of the belowgrade tank.

3. There are some contamination areas posted within the 202S Annex. The available inventory for the unventilated 202S Annex is calculated using the structure floor areas and the upper limit for a contamination area (2,000 dpm/100 cm^2 alpha and 100,000 dpm/100 cm^2 beta/gamma for removable surface contamination). For conservatism, the annexes are assumed to be contamination areas, so the entire floor surface area will be used (calculated in Table 3). This assumption also accounts for possible radiological contamination of the ducting from the Southwest Annex to the 202S Canyon. It is also assumed that any high contamination areas will be addressed prior to demolition and those activities would be bounded by the 291S001 point source calculation.

   Using the total floor area (in m^2) from Table 3, the 202S Annex inventory is calculated using Equation 1:

$$\text{Inventory } (Ci) = \text{Area } (m^2) \times \left(\frac{10{,}000\ cm^2}{1\ m^2}\right) \times Limit\ \left(\frac{dpm}{100\ cm^2}\right) \times \left(\frac{1\ Ci}{2.22E{+}12\ dpm}\right) \quad (1)$$

   Equation 1 yields an inventory for the 202S Annex of 2.74E-04 Ci of alpha and 1.37E-02 Ci of beta/gamma. It is conservatively assumed that all alpha is Pu-239/240 and all beta/gamma is Cs-137 as they have the highest dose factors. The assumption that the entire 202S Annex is a contamination area is sufficiently conservative; therefore, no CM is applied (i.e., CM=1).

Table 3. 202S Annex Floor Area

Annex	Gallery Level	Rooms	Length[a] (ft)	Width[a] (ft)	Area[b] (ft^2)
North	Pipe Gallery	All	143.50	30.00	4,305.00
	Sample Gallery	Cable Room #1	39.00	30.00	1,170.00
		Cable Room #2	27.00	15.50	418.50
East	Pipe Gallery	All	19.00	63.00	1,197.00
Southwest	Pipe Gallery	West Leg	48.67	130.50	6,351.44
		South Leg	312.58	47.00	14,691.26
	Sample Gallery	Cable Room #3	33.00	47.00	1,551.00
	Operating Gallery	Blower Room #3	42.33	47.00	1,989.51
		Blower Room #5	44.17	23.17	1,023.42
				Total Annex Area (ft^2) =	**32,697.12**
				Total Annex Area[c] (m^2) =	**3,037.66**

References: H-2-7423, *Plan – North & West Service Areas & Cable Rooms #1 & #2*; H-2-7424, *Plans – South Service Area & Cable Room 3*; and H-2-7432, *Plans – Blower Rooms No. 3 & 5 & South Service Area Roof.*

a. Length is measured east to west. Width is measured north to south.

b. Calculate Area: **Area = Length × Width.**

c. Conversion factor: 1 m^2 = 10.76391 ft^2

4. The dose factors for diffuse and fugitive emissions are taken from DOE/RL-2006-29 (Rev. 2), Table 4.5, with an effective release height of less than 40 m (131 ft) based on the proximity of the contaminated areas to ground surface (276S, 293S, and the 202S Annex are all less than 131 ft) and their location within the 200 West Area. The dose-per-unit-release factors include the parent isotope and its radioactive decay products (+D), in accordance with Section 3.2.3 of DOE/RL-2006-29 (Rev. 2).

3.2 Methodology

Potential point source and diffuse and fugitive air emission estimates are both determined using Method 1 described in Section 2.1.1 of DOE/RL-2006-29 (Rev. 2). Section 3.4 provides the air emissions calculations.

The MAR, which is the assumed quantity of contamination present, is estimated from the inventory, with previously identified CMs applied (for diffuse and fugitive emissions only). The MAR is used to calculate the PTE, which is an estimate of the radionuclides that could potentially be emitted during the REDOX Complex removal action. The PTE and dose factors from DOE/RL-2006-29 (Rev. 2), based on physical configurations, are used to determine the TEDE to the offsite and onsite MEI.

The calculation is outlined in the following steps:

1. Calculate the MAR (Section 3.2.1).
2. Determine PTE (Section 3.2.2).
3. Calculate the TEDE to the offsite and onsite MEI (Section 3.2.3).

The following sections provide detailed descriptions of each step.

3.2.1 Material-at-Risk

The MAR is measured as total activity in curies. The building inventories are used to calculate MAR. The MAR is equal to the inventory (as specified in Sections 3.1.2.2, Items 1 and 2, and Section 3.1.2.3, Items 1 through 3), multiplied by a CM, if applicable. CMs are discussed in Section 3.1.2.3. Equation 2 shows this process:

$$\text{MAR}\ (Ci) = \text{Activity}\ (Ci) \times CM \tag{2}$$

where:

MAR = material-at-risk
Activity = building activity or inventory
CM = conservatism multiplier

3.2.2 Potential-to-Emit

The maximum PTE in a calendar year is calculated using the MAR and a release fraction, in accordance with NESHAP (40 CFR 61, Appendix D). Since it is assumed that the entire MAR is available for release within a 1-year period (as described in Section 3.1.1.1, Item 1), Ci/yr is used for MAR units in PTE and the TEDE to the MEI calculations. The MAR is multiplied by a unitless release fraction of 1.0E-03, as described in Section 3.1.2.1, Item 1. Equation 3 shows this process:

$$\text{PTE}\left(\frac{Ci}{yr}\right) = \text{MAR}\left(\frac{Ci}{yr}\right) \times 1.0\text{E-}03 \tag{3}$$

where PTE is potential-to-emit

3.2.3 Dose to the Maximally Exposed Individual

The TEDE to the onsite and offsite MEI are determined by multiplying the PTE, as determined using Equation 3, by the dose-per-unit-release factors, as described in Section 3.1.2.2, Items 4 and 5 (for point source emissions) and Section 3.1.2.3, Item 4 (for diffuse and fugitive emissions). The TEDE to the onsite MEI for a single isotope is performed using Equation 4:

$$\text{Onsite TEDE}\left(\frac{mrem}{yr}\right) = \text{PTE}\left(\frac{Ci}{yr}\right) \times \text{Onsite Dose Factor}\left(\frac{mrem/yr}{Ci/yr}\right) \tag{4}$$

Similarly, the TEDE to the offsite MEI for a single isotope is performed using Equation 5:

$$\text{Offsite TEDE}\left(\frac{mrem}{yr}\right) = \text{PTE}\left(\frac{Ci}{yr}\right) \times \text{Offsite Dose Factor}\left(\frac{mrem/yr}{Ci/yr}\right) \tag{5}$$

3.3 Software Applications

Microsoft® Excel® 2016 was used to perform the calculations in Section 3.4. Excel is a site licensed client software.

3.4 Calculations

The calculations use the assumptions and inputs stated in Section 3.1 and follow the methodology described in Section 3.2. Table 4 provides the calculation for potential point source air emissions from the 291S001 stack for the REDOX Complex radiological constituents of concern. Table 5 provides the potential diffuse and fugitive air emission calculations for the REDOX Complex radiological constituents of concern. Table 6 provides the TEDE for onsite and offsite MEIs by summing the total onsite and offsite emissions for both point source and diffuse and fugitive emissions. The TEDE to the onsite MEI is 5.77 mrem/yr; the TEDE to the offsite MEI is 4.96 mrem/yr.

Table 7 provides the potential point source air emissions from the 296S002 Stack for the REDOX Complex radiological constituents of concern. These emissions are a subset of the total potential dose, not additional potential dose.

3.5 Radiological Air Emission Results

Potential radionuclide air emission estimates were calculated for the REDOX Complex removal action described in the REDOX RAWP (DOE/RL-2017-06, Decisional Draft) and potential future removal actions. The resulting unabated TEDE to the MEI are as follows:

- The TEDE to the onsite MEI is 5.77 mrem/yr. The onsite MEI is located at the Laser Interferometer Gravitational-Wave Observatory. The distance from the 200 West Area emission zone to the Laser Interferometer Gravitational-Wave Observatory is 18.5 km (11.5 mi) east-southeast.
- The TEDE to the offsite MEI is 4.96 mrem/yr. The offsite MEI is located at the Hanford Site boundary. The distance from the 200 West Area emission zone to the Hanford Site boundary is 22 km (13.7 mi) southeast.

As determined by the above calculations, the TEDE to the MEIs for the REDOX Complex are above the 0.1 mrem/yr limit in WAC 246-247-075, "Monitoring, Testing, and Quality Assurance," that requires continuous monitoring of radionuclide emissions, but below the 10 mrem/yr ambient air requirement in NESHAP (40 CFR 61, Subpart H, "National Emission Standards for Emissions of Radionuclides Other Than Radon from Department of Energy Facilities"). They are also in compliance with WAC 246-221-060, "Radiation Protection Standards," "Dose Limits for Individual Members of the Public," which requires that the Hanford Site operations not result in a dose to an individual member of the public in excess of 10 mrem/yr.

For the 296S002 Stack, the TEDE to the onsite MEI is 0.585 mrem/yr; the TEDE to the offsite MEI is 0.459 mrem/yr. These stack emissions are a subset of the total potential dose given above, not additional potential dose.

® Microsoft and Excel are registered trademarks of Microsoft Corporation, Redmond, Washington.

Table 4. PTE and TEDE to the MEI Calculation for the 291S001 Stack Point Source

A	B	C	D	E	F	G	H
				Dose Factor[d] (mrem/yr per Ci/yr)		Unabated TEDE (mrem/yr)	
Isotopes	Inventory[a] (Ci)	MAR[b] (Ci)	Unabated PTE[c] (Ci/yr)	Onsite MEI	Offsite MEI	Onsite MEI[e]	Offsite MEI[f]
Pu-239/240 (alpha)	1.98E+03	1.98E+03	1.98E+00	2.19E+00	1.55E+00	4.34E+00	3.07E+00
Cs-137 (beta)	1.33E+04	1.33E+04	1.33E+01	1.06E-01	1.41E-01	1.41E+00	1.88E+00
					Totals	**5.75E+00**	**4.95E+00**

a. Inventory for 202S Building (as specified in Section 3.1.2.2, Item 1).

b. MAR equals inventory: **Column C** (MAR) = **Column B** (Inventory) (see Section 3.2.1).

c. PTE is calculated: **Column D** (PTE) = **Column C** (MAR) × **Release Fraction** (see Section 3.2.2, Equation 3).
- Release Fraction = 1.0E-03 (as specified in Section 3.1.2.1, Item 1).

d. Dose factors were obtained from DOE/RL-2006-29, Rev. 2, *Calculating Potential-to-Emit Radiological Releases and Doses,* Table 4.5, with an effective release height of greater than 40 m (131 ft) (as specified in Section 3.1.2.2, Item 4).

e. TEDE to the onsite MEI is calculated: **Column G** (Onsite TEDE) = **Column D** (PTE) × **Column E** (Onsite Dose Factor) (see Section 3.2.3, Equation 4).

f. TEDE to the offsite MEI is calculated: **Column H** (Offsite TEDE) = **Column D** (PTE) × **Column F** (Offsite Dose Factor) (see Section 3.2.3, Equation 5).

Table 5. PTE and TEDE to the MEI Calculation for the REDOX Complex Diffuse and Fugitive

A	B	C	D	E	F	G	H	I
Isotopes	Inventory (Ci)	Conservatism Multiplier[d]	MAR[e] (Ci)	Unabated PTE[f] (Ci/yr)	Dose Factor[g] (mrem/yr per Ci/yr)		Unabated TEDE (mrem/yr)	
					Onsite MEI	Offsite MEI	Onsite MEI[h]	Offsite MEI[i]
276S Hexone Tanks (276S141 and 276S142)[a]								
Sr-90	1.35E-02	1.5	2.03E-02	2.03E-05	4.37E-02	1.50E-01	8.88E-07	3.05E-06
Pu-238	1.06E-02	1.5	1.59E-02	1.59E-05	3.02E+00	1.98E+00	4.79E-05	3.14E-05
Pu-239/240	1.52E-02	1.5	2.27E-02	2.27E-05	3.29E+00	2.16E+00	7.48E-05	4.91E-05
Am-241	3.45E-02	1.5	5.18E-02	5.18E-05	2.73E+00	1.79E+00	1.41E-04	9.27E-05
293S Building[b]								
Pu-239/240	1.00E+00	4.0	4.00E+00	4.00E-03	3.29E+00	2.16E+00	1.32E-02	8.64E-03
Cs-137	4.00E+00	4.0	1.60E+01	1.60E-02	1.48E-01	1.87E-01	2.37E-03	2.99E-03
202S Annex[c]								
Pu-239/240	2.74E-04	1.0	2.74E-04	2.74E-07	3.29E+00	2.16E+00	9.00E-07	5.91E-07
Cs-137	1.37E-02	1.0	1.37E-02	1.37E-05	1.48E-01	1.87E-01	2.03E-06	2.56E-06
						Totals	**1.58E-02**	**1.18E-02**

Table 5. PTE and TEDE to the MEI Calculation for the REDOX Complex Diffuse and Fugitive

A	B	C	D	E	F	G	H	I
					Dose Factor[g] (mrem/yr per Ci/yr)		Unabated TEDE (mrem/yr)	
Isotopes	Inventory (Ci)	Conservatism Multiplier[d]	MAR[e] (Ci)	Unabated PTE[f] (Ci/yr)	Onsite MEI	Offsite MEI	Onsite MEI[h]	Offsite MEI[i]

a. Inventory for 276S Hexone Tanks (as specified in Section 3.1.2.3, Item 1).

b. Inventory for 293S Building (as specified in Section 3.1.2.3, Item 2).

c. Inventory for 202S Annex (as specified in Section 3.1.2.3, Item 3).

d. Conservatism multiplier, as specified in Section 3.1.2.3, Items 1 through 3.

e. MAR is calculated: **Column D** (MAR) = **Column B** (Inventory) × **Column C** (CM) (see Section 3.2.1, Equation 2).

f. PTE is calculated: **Column E** (PTE) = **Column D** (MAR) × **Release Fraction** (see Section 3.2.2, Equation 3).
• Release Fraction = 1.0E-03 (as specified in Section 3.1.2.1, Item 1).

g. Dose factors were obtained from DOE/RL-2006-29, Rev. 2, *Calculating Potential-to-Emit Radiological Releases and Doses,* Table 4.5, with an effective release height of less than 40 m (131 ft) (as specified in Section 3.1.2.3, Item 4).

h. TEDE to the onsite MEI is calculated: **Column H** (Onsite TEDE) = **Column E** (PTE) × **Column F** (Onsite Dose Factor) (see Section 3.2.3, Equation 4).

i. TEDE to the offsite MEI is calculated: **Column I** (Offsite TEDE) = **Column E** (PTE) × **Column G** (Offsite Dose Factor) (see Section 3.2.3, Equation 5).

Table 6. TEDE to the MEI for the REDOX Complex Removal Action

Emission Type	Unabated TEDE (mrem/yr)	
	Onsite MEI	Offsite MEI
291S001 Point Source (totals from Table 4)	5.75E+00	4.95E+00
Diffuse and Fugitive (totals from Table 5)	1.58E-02	1.18E-02
Totals	**5.77E+00**	**4.96E+00**

Table 7. PTE and TEDE to the MEI Calculation for the 296S002 Stack Point Source

A	B	C	D	E	F	G	H
				Dose Factor[d] (mrem/yr per Ci/yr)		Unabated TEDE (mrem/yr)	
Isotopes	Inventory[a] (Ci)	MAR[b] (Ci)	Unabated PTE[c] (Ci/yr)	Onsite MEI	Offsite MEI	Onsite MEI[e]	Offsite MEI[f]
Pu-239/240 (alpha)	1.40E+02	1.40E+02	1.40E-01	3.29E+00	2.16E+00	4.61E-01	3.02E-01
Cs-137 (beta)	8.40E+02	8.40E+02	8.40E-01	1.48E-01	1.87E-01	1.24E-01	1.57E-01
					Totals	**5.85E-01**	**4.59E-01**

a. Inventory for 202S North Sample Gallery (as specified in Section 3.1.2.2, Item 2).

b. MAR equals inventory: **Column C** (MAR) = **Column B** (Inventory) (see Section 3.2.1).

c. PTE is calculated: **Column D** (PTE) = **Column C** (MAR) × **Release Fraction** (see Section 3.2.2, Equation 3).
• Release Fraction = 1.0E-03 (as specified in Section 3.1.2.1, Item 1).

d. Dose factors were obtained from DOE/RL-2006-29, Rev. 2, *Calculating Potential-to-Emit Radiological Releases and Doses,* Table 4.5, with an effective release height of less than 40 m (131 ft) (as specified in Section 3.1.2.2, Item 5).

e. TEDE to the onsite MEI is calculated: **Column G** (Onsite TEDE) = **Column D** (PTE) × **Column E** (Onsite Dose Factor) (see Section 3.2.3, Equation 4).

f. TEDE to the offsite MEI is calculated: **Column H** (Offsite TEDE) = **Column D** (PTE) × **Column F** (Offsite Dose Factor) (see Section 3.2.3, Equation 5).

4 Criteria/Toxic Air Determination

This chapter documents the determination of criteria/toxic air emissions resulting from the removal action at the REDOX Complex. This determination supports the REDOX RAWP (DOE/RL-2017-06, Decisional Draft) and subsequent field work packages. The nonradioactive emissions resulting from this removal action will be fugitive particulate matter. Under WAC 173-400, "General Regulations for Air Pollution Sources," and WAC 173-460, "Controls for New Sources of Toxic Air Pollutants," requirements are established for the regulation of emissions of criteria and toxic air pollutants. In accordance with WAC 173-400-040, "General Standards for Maximum Emissions," reasonable precautions must be taken to prevent the release of air contaminants associated with fugitive emissions resulting from materials handling, demolition, or other operations if criteria/toxic emissions are expected.

To support separation operations in REDOX, various chemicals were added at different stages in the process. Table 8 provides the bounding chemical contaminants of concern for the REDOX Complex. These chemicals are identified through review of REDOX process flowsheets and other historical documents, in addition to knowledge of contaminants found in building materials used at the time of construction. The chemical contaminants identified in Table 8 were compared to WAC 173-460-150, "Table of ASIL, SQER and de Minimis Emission Values" to identify regulated contaminants. Table 9 includes those chemicals from Table 8 that are regulated and their de minimis emission values.

It is recognized that several process chemicals, arsenic, beryllium, cadmium, and chromium have low de minimis values. The toxic contaminants of concern historically at the Hanford Site are those with vapor pressures of greater than 1 mmHg at ambient temperature (20°C [68°F]). This means that metals and mercury should be considered non-volatile at room temperature (i.e., will not produce any toxic emissions during the work) and below the WAC 173-460-150 de minimis threshold. Hexone, nitric acid, and sodium hydroxide (vapor pressures greater than 1 mmHg at ambient temperature) could have some emissions if any liquid is left and exposed to ambient air.

Table 8. Chemical Contaminants of Concern

Acetylene tetrabromide	Corrosives (acids and caustics), including: • Aluminum nitrate, $Al(NO_3)_3$ • Aluminum nitrate nonahydrate, $Al(NO_3)_3 \cdot 9H_2O$ • Ammonium fluoride, NH_4F • Ammonium nitrate, NH_4NO_3 • Boric acid, BH_3O_3 • Chromate, CrO_4^{2-} • Chromium nitrate, $Cr(NO_3)_3$ • Ferric nitrate, $Fe(NO_3)_3$ • Ferrous sulfamate, $Fe(H_2NO_3S)_2$ • Hexone (methyl isobutyl ketone), $C_6H_{12}O$ • Mercuric nitrate, $Hg(NO_3)_2$ • Nitric acid, HNO_3 • Normal paraffin hydrocarbons • Oxalic acid, $C_2H_2O_4$ • Plutonium nitrate, $Pu(NO_3)_4$ • Potassium permanganate, $KMnO_4$ • Sodium aluminate, $NaAlO_2$ • Sodium carbonate, Na_2CO_3 • Sodium dichromate, $Na_2Cr_2O_7$ • Sodium hydroxide, NAOH • Sodium nitrate, $NaNO_3$ • Sodium nitrite, $NaNO_2$ • Sodium phosphate, Na_3PO_4 • Sulfamic acid, H_3NSO_3 • Tributyl phosphate, $C_{12}H_{27}O_4P$ • Uranyl nitrate hexahydrate, $UO_2(NO_3)_2 \cdot 6H_2O$
Anions (bromide, chloride, fluoride, nitrate, nitrite, phosphate, and sulfate)	
Asbestos and asbestos-containing material	
Beryllium	
Lubricants/oils	
Metals (aluminum, arsenic, barium, cadmium, chromium, hexavalent chromium, iron, lead, mercury, nickel, selenium, silver, sodium, sulfur, and zinc)	
Polychlorinated biphenyls	
Total organic halides	

Reference: DOE/RL-2017-05, *Sampling and Analysis Plan for the REDOX Complex*, Draft B.

Table 9. De Minimis Emission Values for REDOX Complex Chemicals

Name	Chemical Abstracts Service Number	De Minimis Emission*
Arsenic and inorganic arsenic compounds	——	2.91E-03 lb/yr
Asbestos	1332-21-4	1.53E-04 lb/yr
Beryllium and compounds, NOS	——	4.00E-03 lb/yr
Cadmium and compounds	7440-43-9	2.28E-03 lb/yr
Chromium(VI)	18540-29-9	6.40E-05 lb/yr
Fluoride-containing chemicals, NOS	——	8.54E-02 lb/day
Hexone (methyl isobutyl ketone)	108-10-1	1.97E+01 lb/day
Lead and compounds, NOS	——	1.00E+01 lb/yr
Mercury, elemental	7439-97-6	5.91E-04 lb/day
Nitric acid	7697-37-2	9.42E-03 lb/hr
Polychlorinated biphenyls, NOS	1336-36-3	1.68E-02 lb/yr
Selenium and compounds (other than Hydrogen Selenide)	——	1.31E-01 lb/day
Sodium hydroxide	1310-73-2	8.76E-04 lb/hr

*Values from WAC 173-460-150, "Table of ASIL, SQER and de Minimis Emission Values."

NOS = not otherwise specified

New emissions from removal of the 276S hexone tanks are not anticipated as the tanks are planned to be removed intact and the void space in the tanks was previously grouted. New emissions of nitric acid from demolition and grouting of the 293S Building are not anticipated as the vessels and piping were drained and blown with air during deactivation and the nitric acid storage tank is documented as being empty.

As stated in Section 2.1, tanks and piping in the 202S Building were rinsed and repeatedly flushed during deactivation activities over 45 years ago. This greatly reduced the potential chemical inventory within the building. Tanks and piping would not be removed in such a manner to create emissions (e.g., crimping of piping, cutting tanks/piping in secondary containment). Emissions of hexone, nitric acid, and sodium hydroxide exceeding the de minimis values in WAC 173-460-150 are not anticipated from the 202S Building due to the reduced chemical inventory combined with standard work practices.

Polychlorinated biphenyls are associated with painted surfaces and electrical equipment (light ballasts) and are unlikely to become airborne due to the techniques employed during the removal activities. Toxic air requirements associated with asbestos-containing materials at the REDOX Complex will be addressed in accordance with applicable NESHAP requirements. A thorough asbestos NESHAP inspection will be performed by an *Asbestos Hazard Emergency Response Act of 1986*-certified building inspector prior to abatement activities.

5 References

40 CFR 61, "National Emission Standards for Hazardous Air Pollutants," *Code of Federal Regulations*. Available at: http://www.gpo.gov/fdsys/pkg/CFR-2010-title40-vol8/xml/CFR-2010-title40-vol8-part61.xml.

Appendix D, "Methods for Estimating Radionuclide Emissions."

Subpart H, "National Emission Standards for Emissions of Radionuclides Other Than Radon from Department of Energy Facilities."

Asbestos Hazard Emergency Response Act of 1986, 15 USC 2614-2656, et seq. Available at: https://www.gpo.gov/fdsys/pkg/USCODE-2009-title15/html/USCODE-2009-title15-chap53-subchapII.htm.

BHI-01142, 2001, *REDOX Facility Safety Analysis Report*, Rev. 3, Bechtel Hanford, Inc., Richland, Washington. Available at: http://pdw.hanford.gov/arpir/index.cfm/viewDoc?accession=0074336H.

BHI-01521, 2001, *Evaluation of Alternatives for the Interim Stabilization of the Hexone Tanks*, Draft B, Bechtel Hanford, Inc., Richland, Washington. Available at: http://pdw.hanford.gov/arpir/index.cfm/viewDoc?accession=D8793559.

DOE/RL-91-50, 2013, *Hanford Site Environmental Monitoring Plan,* Rev. 6A, U.S. Department of Energy, Richland Operations Office, Richland, Washington. Available at: http://pdw.hanford.gov/arpir/index.cfm/viewDoc?accession=1503160460.

DOE/RL-2006-29, 2016, *Calculating Potential-to-Emit Radiological Releases and Doses*, Rev. 2, U.S. Department of Energy, Richland Operations Office, Richland, Washington. Available at: http://pdw.hanford.gov/arpir/index.cfm/viewDoc?accession=0072749H.

DOE/RL-2009-112, 2010, *Hexone Storage and Treatment Facility Closure Plan*, Rev. 0, U.S. Department of Energy, Richland Operations Office, Richland, Washington. Available at: http://pdw.hanford.gov/arpir/index.cfm/viewDoc?accession=0084307.

DOE/RL-2009-116, 2010, *Sampling and Analysis Plan for the Hexone Storage and Treatment Facility Closure Plan*, Rev. 0, U.S. Department of Energy, Richland Operations Office, Richland, Washington. Available at: http://pdw.hanford.gov/arpir/index.cfm/viewDoc?accession=0084307.

DOE/RL-2016-52, 2017, *Action Memorandum for the REDOX Complex*, Draft A, U.S. Department of Energy, Richland Operations Office, Richland, Washington.

DOE/RL-2017-05, 2017, *Sampling and Analysis Plan for the REDOX Complex*, Draft B, U.S. Department of Energy, Richland Operations Office, Richland, Washington.

DOE/RL-2017-06, 2017, *Removal Action Work Plan for the REDOX Complex*, Decisional Draft, U.S. Department of Energy, Richland Operations Office, Richland, Washington.

FH-0400890, 2004, *REDOX Facility Safety Analysis Report Addendum Submittal*, Fluor Hanford, Inc., Richland, Washington.

H-2-7423 (drawing), 1951, *Arch. Plan – North & West Service Areas & Cable Rooms #1 & #2*, Rev. 3, General Electric Company, Richland, Washington.

H-2-7424 (drawing), 1951, *Arch. Plans – South Service Area & Cable Room #3*, Rev. 3, General Electric Company, Richland, Washington.

H-2-7432 (drawing), 1998, *Arch. Plans – Blower Rooms No. 3 & 5 & South Service Area Roof*, Rev. 4, General Electric Company, Richland, Washington.

HNF-13830, 2018, *Documented Safety Analysis for the Reduction-Oxidation Facility*, Rev. 7, CH2M HILL Plateau Remediation Company, Richland, Washington.

ISO-1108, 1966, *REDOX Deactivation Manual*, Isochem Inc., Richland, Washington. Available at: http://pdw.hanford.gov/arpir/index.cfm/viewDoc?accession=0071627H.

Resource Conservation and Recovery Act of 1976, 42 USC 6901, et seq. Available at: https://elr.info/sites/default/files/docs/statutes/full/rcra.pdf.

SD-DD-FL-001, 1982, *Rockwell Retired Contaminated Facility Listing and Description*, Rev. 0, Rockwell Hanford Operations, Richland, Washington. Available at: http://pdw.hanford.gov/arpir/index.cfm/viewDoc?accession=0077155H.

WAC 173-400-040, "General Regulations for Air Pollution Sources," "General Standards for Maximum Emissions," *Washington Administrative Code*, Olympia, Washington. Available at: http://apps.leg.wa.gov/WAC/default.aspx?cite=173-400-040.

WAC 173-460-150, "Controls for New Sources of Toxic Air Pollutants," "Table of ASIL, SQER and de Minimis Emission Values," *Washington Administrative Code*, Olympia, Washington. Available at: http://apps.leg.wa.gov/WAC/default.aspx?cite=173-460-150.

WAC 246-221-060, "Radiation Protection Standards," "Dose Limits for Individual Members of the Public," *Washington Administrative Code*, Olympia, Washington. Available at: http://apps.leg.wa.gov/WAC/default.aspx?cite=246-221-060.

WAC 246-247, "Radiation Protection—Air Emissions," *Washington Administrative Code*, Olympia, Washington. Available at: http://apps.leg.wa.gov/WAC/default.aspx?cite=246-247.

247-030, "Definitions."

247-075, "Monitoring, Testing, and Quality Assurance."

WHC-EP-0570, 1992, *The Distillation and Incineration of 132,000 Liters (35,000 Gallons) of Mixed-Waste Hexone Solvents from Hanford's REDOX Plant*, Westinghouse Hanford Company, Richland, Washington. Available at: http://pdw.hanford.gov/arpir/index.cfm/viewDoc?accession=D196107914.

This page intentionally left blank.

Appendix A

Inventory Calculation for 276S Hexone Tanks

This page intentionally left blank.

A1 Introduction

This appendix calculates the inventory in the 276S141 and 276S142 hexone tanks based on results of samples taken in 2001 of the remaining sludge in the tanks. Samples were obtained prior to grouting of the remaining tank headspaces in 2002. Sample results are documented in BHI-01521, *Evaluation of Alternatives for the Interim Stabilization of the Hexone Tanks*, Draft B. Excerpts of the radionuclide results from BHI-01521 (Draft B) are shown in Figures A-1 through A-3.

The inventory for each tank is calculated using sample results for total strontium (conservatively assumed to be all Sr-90), Pu-238, Pu-239/240, and Am-241. Sample results for other analytes are not used as they contribute less than 10% to the inventory in both tanks. The radionuclide sample results are given as pCi/g (activity per unit mass). Therefore, the mass of sludge remaining in each tank is needed. The sludge mass is calculated as shown in Equation A-1 with results for each tank in Table A-1. A conversion factor (CF) is used to convert volume from standard to metric units (CF1: 1 gal = 3,785.41 mL).

$$\text{Mass } (g) = Volume\ (gal) \times CF1 \left(\frac{mL}{gal}\right) \times Density \left(\frac{g}{mL}\right) \quad \textbf{(A-1)}$$

Table A-1. Mass of Remaining Sludge in 276S Hexone Tanks

Property	Tank 276S141	Tank 276S142
Volume[a]	130.0 gal	130.0 gal
Density[b]	1.21 g/mL	1.20 g/mL
Mass[c]	595,445 g	590,524 g

a. BHI-01521, 2001, *Evaluation of Alternatives for the Interim Stabilization of the Hexone Tanks*, Draft B, Section 4.1.

b. BHI-01521, Draft B, Section 4.2 (value is the maximum of east and west sample results).

c. Calculate mass: **Mass** = **Volume** × **CF1** × **Density**
- CF1: 1 gal = 3,785.41 mL

To obtain the inventory for each tank, the maximum sample result for each isotope is multiplied by the remaining sludge mass in that tank and then converted to Ci using CF2 (1 Ci = 1.0E+12 pCi), as shown by Equation A-2.

$$\text{Inventory } (Ci) = Mass\ (g) \times Maximum\ Result \left(\frac{pCi}{g}\right) \times CF2 \left(\frac{Ci}{pCi}\right) \quad \textbf{(A-2)}$$

Table A-2 and Table A-3 present the inventory for tank 276S141 and tank 241S142, respectively. Average sample results are shown in Tables A-2 and A-3 for information only. The inventory summation for the two tanks is presented in Table 2 of the main body.

A2 Reference

BHI-01521, 2001, *Evaluation of Alternatives for the Interim Stabilization of the Hexone Tanks*, Draft B, Bechtel Hanford, Inc., Richland, Washington. Available at: http://pdw.hanford.gov/arpir/index.cfm/viewDoc?accession=D8793559.

Table A-2. Inventory Calculation for Tank 276S141

Isotope	Sample Results[a] (pCi/g)					Average Result (pCi/g)	Maximum Result (pCi/g)	Inventory[b] (Ci)
	B11D03/ B11D08	B11D10	B11D05/ B11D11	B11D12	B11D13			
Total Sr	1,330	---	1,220	---	---	1,275	1,330	7.92E-04
Pu-238	2,210	2,910	1,260	4,280	3,460	2,824	4,280	2.55E-03
Pu-239/240	3,100	3,590	1,320	5,820	4,100	3,586	5,820	3.47E-03
Am-241	6,830	5,980	2,780	9,770	10,800	7,232	10,800	6.43E-03

a. Results from Tables 4-1 and 4-3 in BHI-01521, *Evaluation of Alternatives for the Interim Stabilization of the Hexone Tanks*, Draft B.

b. Calculate Inventory: **Inventory** = **Mass** (Table A-1) × **Maximum Result** × **CF2**
• CF2: 1 Ci = 1.0E+12 pCi

Table A-3. Inventory Calculation for Tank 276S142

Isotope	Sample Results[a] (pCi/g)					Average Result (pCi/g)	Maximum Result (pCi/g)	Inventory[b] (Ci)
	B11D06/ B11D15	B11D17	B11D07/ B11D14	B11D16	B11H76			
Total Sr	9,020	---	21,600	---	---	15,310	21,600	1.28E-02
Pu-238	8,000	9,160	10,100	10,000	13,600	10,172	13,600	8.03E-03
Pu-239/240	9,960	11,400	14,600	13,200	19,800	13,792	19,800	1.17E-02
Am-241	26,000	21,500	36,100	34,400	47,600	33,120	47,600	2.81E-02

a. Results from Tables 4-2 and 4-3 in BHI-01521, *Evaluation of Alternatives for the Interim Stabilization of the Hexone Tanks*, Draft B.

b. Calculate Inventory: **Inventory** = **Mass** (Table A-1) × **Maximum Result** × **CF2**
• CF2: 1 Ci = 1.0E+12 pCi

Table 4-1. 276-S Hexone Tank Sludge – Tank 141 Sludge Sample Final Results. (4 Pages)

Contaminant of Concern	West Composite Sample (B11D03/D08)	West Replicate Sample (B11D04/D09)	East Sample (B11D05/D11)
2-butanone	4.4	4.1	4.5
2-hexanone	34	34	22
Acetone	47	60	153
Hexone	8,430	9,790	13,700
Semi-Volatile Organics (μg/g)			
Aroclor 1254	7.2	7.1	3.3
DNB-phth[a]	630 U	120 J	260 J
Tributyl phosphate	55,000	41,000	11,000
NPH[b]	55,600 J	43,600 J	60,600 J
Radionuclides (pCi/g)			
Hydrogen-3	650	781	1600
Carbon-14	104	75	89
Cobalt-60	0.59 U	0.65 U	0.24 U
Total strontium	1,330	1,020	1,220
Technetium-99	11 U	11 U	4.2 U
Antimony-125	8.0	8.6	2.4
Cesium-137	74	64	115
Europium-152	2.1 U	2.9 U	1.2 U
Europium-154	194	182	38
Europium-155	53	45	8.3
Uranium-233/234	15	16	9.6 U
Uranium-235	11 U	12 U	12 U
Uranium-238	8.4	14	9.6 U
Plutonium-238	2,210	2,520	1,260
Plutonium-239/240	3,100	3,610	1,320
Americium-241	6,830	7,210	2,780
Curium-244	579	390	135

Figure A-1. Radionuclides Excerpt from Table 4-1 in BHI-01521, *Evaluation of Alternatives for the Interim Stabilization of the Hexone Tanks*

Table 4-2. 276-S Hexone Tank Sludge – Tank 142 Sludge Sample Final Results. (3 Pages)

Contaminant of Concern	West Composite Sample (B11D06/D15)	East Sample (B11D07/D14)	Equipment Blank (B11CX1)	Equipment Blank (B11CX2)
Radionuclides (pCi/g)				
Hydrogen-3	467	581	0.16 U	0.16 U
Carbon-14	84	85	0.046 U	0.044 U
Cobalt-60	1.0	2.1 U	0.016 U	0.008 U
Total strontium	9,020	21,600	0.00050 U	0.00050 U
Techtetium-99	15 U	49 U	0.011 U	0.012 U
Antimony-125	38	113	NA	NA
Cesium-137	1,040	1,060	0.0015 U	0.0008 U
Europium-152	2.4 U	9.3 U	0.038 U	0.022 U
Europium-154	379	874	0.052 U	0.028 U
Europium-155	75	186	0.021 U	0.021 U
Uranium-233/234	31	74	0.000026 U	0.000023 U
Uranium-235	11 U	36 U	0.000025 U	0.000022 U
Uranium-238	29	78	0.000021 U	0.000018 U
Plutonium-238	8,000	10,100	0.00024 U	0.00019 U
Plutonium-239/240	9,960	14,600	0.00024 U	0.00019 U
Americium-241	26,000	36,100	0.00024 U	0.00029 U
Curium-244	1,970	2,090	0.00030 U	0.00029 U
Other Analytes				
Ignitability (°F)	NA	NA	Not Ignitable	Not Ignitable
Total organic carbon	>10%	>10%	0.50 U	0.50 U
pH (units)	4.1	4.6	7.9	6.5
Density (g/mL)	0.91	1.20	NA	NA

[a] Di-n-butyl phthalate.
[b] Normal paraffin hydrocarbon (sum of all straight-chain hydrocarbons detected).
J = parameter detected below the reporting limit
NA = parameter not analyzed
TCLP = toxic characteristic leachate procedure
U = parameter not detected above the reported limit

Figure A-2. Radionuclides Excerpt from Table 4-2 in BHI-01521, *Evaluation of Alternatives for the Interim Stabilization of the Hexone Tanks*

Table 4-3. 276-S Hexone Tank Sludge Samples TRU Evaluation.

Contaminant of Concern	West Sample (B11D08)	Middle Sample (B11D10)	East Sample (B11D11)	North Sample (B11D12)	South Sample (B11D13)
Tank 141 Sludge TRU Final Results					
TRU Radionuclides (pCi/g)					
Plutonium-238	2,210	2,910	1,260	4,280	3,460
Plutonium-239/240	3,100	3,590	1,320	5,820	4,100
Americium-241	6,830	5,980	2,780	9,770	10,800
Curium-244	579	279	135	750	535
TRU Calculations (nCi/g)					
Total TRU	12.7	12.8	5.5	20.6	18.9
Number of samples	5				
Average TRU	14.1				
Standard deviation	5.4				
Z-statistic	1.6				
95% UCL[a]	18.0				
Tank 142 Sludge TRU Final Results					
Contaminant of Concern	**West Sample (B11D15)**	**Middle Sample (B11D17)**	**East Sample (B11D14)**	**North Sample (B11D16)**	**South Sample (B11H76)**
TRU Radionuclides (pCi/g)					
Plutonium-238	8,000	9,160	10,100	10,000	13,600
Plutonium-239/240	9,960	11,400	14,600	13,200	19,800
Americium-241	26,000	21,500	36,100	34,400	47,600
Curium-244	1,970	1,360	2,090	1,370	2,390
TRU Calculations (nCi/g)					
Total TRU	45.9	43.4	62.9	59.0	83.4
Number of samples	5				
Average TRU	58.9				
Standard deviation	14.3				
Z-statistic	1.6				
95% UCL[a]	69.4				

[a] Remedial Design Report/Remedial Action Work Plan for the 100 Area, Rev. 2, Appendix G, DOE/RL-96-17 (DOE-RL 2000a).
TRU = transuranic
UCL = upper confidence limit

Figure A-3. Excerpt of Table 4-3 in BHI-01521, *Evaluation of Alternatives for the Interim Stabilization of the Hexone Tanks*