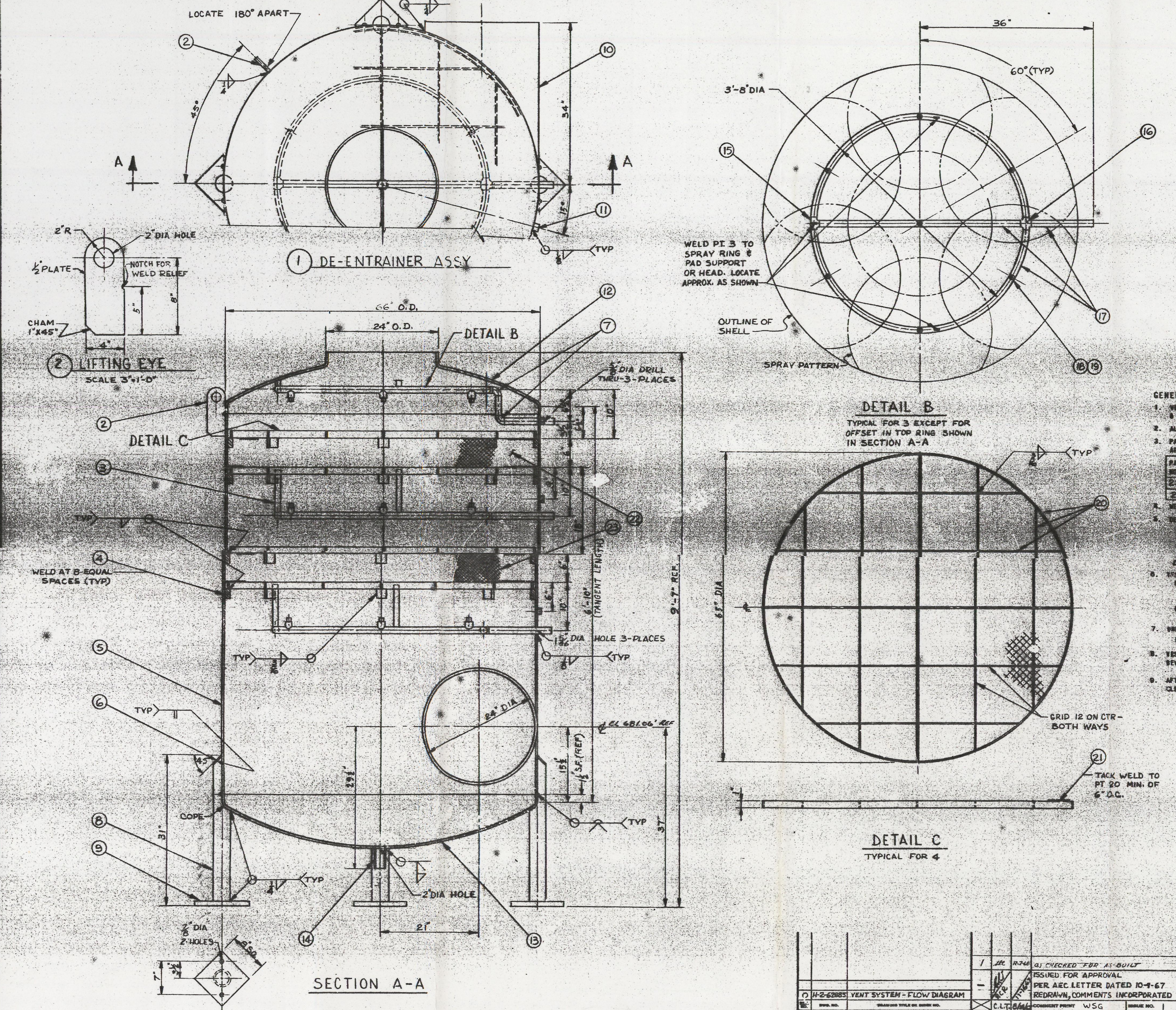

QTY.	PT. NO.	DESCRIPTION	MATERIAL
X	1	ASSEMBLY K1-5-1	
2	2	LIFTING EYE	ASTM A-240 TYPE 304L SST
9	3	BAR 1"X1/4	
32	4	BAR 2X1"X4	
1	5	SHELL 3/8" TK	
4	6	PLATE 1/4" TK	
2	7	ELBOW 1" SCH 40 WELDING	A-403-61T TYPE 304L
AR	8	PIPE 3" SCH 40	A-312 TYPE 304L
4	9	PLATE 1/2" TK	A-240 TYPE 304L
AR	10	PIPE 24" SCH 10	A-312 TYPE 304
3	11	HALF COUPLING 3000# 1/2" NPT	A-403 TYPE 304 L
1	12	FLANGED & DISHED HEAD ASME STD 66" O.D. X 1/4 THK. NOM. WITH FLUE ON ℄ 24" O.D. 1 1/2 SF.	A-240 TYPE 304L
1	13	FLANGED & DISHED HEAD ASME STD 66" O.D. X 1/4 THK. NOM. 1 1/2" S.F.	
AR	14	PIPE 2" SCH 40	A-312 TYPE 304L
3	15	TEE 1" SCH 40 WELDING ASA B16.9	A-403-61T TYPE 304L
3	16	CROSS 1" SCH 40 WELDING ASA B16.9	
AR	17	PIPE 1" SCH 40	A-312 TYPE 304 L
21	18	THRED-O-LET 3/8" NPT X1"	TYPE 304
21	19	SPRAY NOZZLE FULL CONE 121° ANGLE FLOW RATE @ 40 PSIG SHALL BE 3.6 G.P.M. 3/8" NPT, SPRAY SYSTEM CO. #3/8 HH20W OR EQUAL	303 SST
AR	20	BAR 1"X1/4	A-240 TYPE 304L
AR	21	SCREEN 1" MESH X 14 GA (.074) WIRE	304L
1	22	PACKING	SEE NOTE 3
1	23	PACKING	SEE NOTE 3

GENERAL NOTES

1. VESSEL SHALL BE FABRICATED IN ACCORDANCE WITH THE LATEST EDITION OF THE ASME BOILER & PRESSURE VESSEL CODE, SECTION VIII. NO ASME CODE STAMP IS REQUIRED.
2. ALL MATERIALS SHALL BE AS SPECIFIED OR APPROVED EQUAL.
3. PACKING SHALL CONFORM TO THE TABLE BELOW & SHALL BE COMPACTED UNIFORMLY OVER THE AREA & DEPTH OF EACH SECTION.

PART NO	PACKING	PACKING REQ DEPTH	REQ AREA SQ. FT.	MAT'L
22	YORK MESH (STYLE [illegible])	6"	27.3	304 SST
23	YORK MESH (STYLE [illegible])	6"	27.3	304 SST

4. WELDING SHALL BE IN ACCORDANCE WITH CODE REQUIREMENT AS PER NOTE #1.
5. DESIGN DATA:
   - DESIGN TEMPERATURE 250°F
   - DESIGN PRESSURE -40" WG
   - OPERATING TEMP 220°F
   - OPERATING PRESSURE -27" WG
   - ΔP ACROSS EACH PAD 0.5" WG MAX.
6. TESTING:
   - (A) TEST SHELL AT 3 PSIG WITH AIR & FREON (FREON MIN .010% BY VOLUME). TEST FOR LEAKS WITH A HALIDE TORCH. ALL LEAK SHALL BE REPAIRED & VESSEL RETESTED USING HALIDE TORCH UNTIL TEST SHOW NO LEAKAGE.
   - (B) TEST SPRAY RING WITH 150 PSIG WATER, REPAIR ALL LEAKS & RETEST UNTIL ALL VISIBLE LEAKS ARE CLOSED.
7. UNLESS OTHERWISE SPECIFIED TOLERANCES SHALL BE: FRACTIONS ± 1/8", ANGLES ± 1°
8. VESSEL INLET, OUTLET, DRAIN & SPRAY RING WATER INLET PIPE ENDS SHALL HAVE 37 1/2° BEVELS FOR WELDING.
9. AFTER TESTING & CLEANING, ALL VESSEL OPENINGS SHALL BE SEALED TO MAINTAIN CLEANLINESS.

DWG. NO.	DRAWING TITLE OR INDEX NO.
H-2-62885	VENT SYSTEM - FLOW DIAGRAM

REFERENCE DRAWINGS

USED WITH DWG. H-2-62888

REV.	BY	DATE	
1	[illegible]	[illegible]	AS CHECKED FOR AS-BUILT
—	[illegible]	[illegible]	ISSUED FOR APPROVAL PER AEC LETTER DATED 10-4-67 REDRAWN, COMMENTS INCORPORATED
	C.L.T.	8/4/67	COMMENT PRINT WSG ISSUE NO. 1
	C.L.T.	8/4/67	CHECK PRINT ISSUE NO.

DRAWING STATUS

H-2-62889 — 1

ARHCO — APPROVED FOR CONFORMANCE WITH DESIGN CRITERIA

U. S. ATOMIC ENERGY COMMISSION
RICHLAND OPERATIONS OFFICE

HANFORD ENGINEERING SERVICES

SCALE 1 1/2"=1'-0" & NOTED

J.C. JOHN
J.J. SNYDER

VENT SYSTEM
EQUIPMENT DETAILS
DEENTRAINER K1-5-1

PROJ. NO. IAP-609 — PUREX TANK FARM VENT SYSTEM EXPANSION
BLDG. NO. 241-A-702 — INDEX NO. 2500
DATE 10/26/67
CLASSIFICATION NONE
DWG. NO. H-2-62889

0031228

CAUTION — COMPLETE WITHOUT CURRENT STATUS OF OUTSTANDING ECNS FROM DATA BASE

APR 28 1992

SEP 1993 RECEIVED EDMC

INFORMATION RELEASE REQUEST

0031228

References: WHC-CM-3-4

Complete for all Types of Release

Purpose

- [x] Speech or Presentation
  - [ ] Full Paper
  - [ ] Summary
  - [ ] Abstract
  - [ ] Visual Aid
  - (Check only one suffix)
- [ ] Speakers Bureau
- [ ] Poster Session
- [ ] Videotape
- [ ] Reference
- [ ] Technical Report
- [ ] Thesis or Dissertation
- [ ] Manual
- [ ] Brochure/Flier
- [ ] Software/Database
- [ ] Controlled Document
- [x] Other WDOH Tank Farm Audit

New ID Number:

Existing ID Number (include revision, volume, etc.): H2-62889

If previously cleared, list ID number.

Date Release Required:

Title: Vent System Equipment Details

Unclassified Category: UC-

Impact Level:

Complete for Speech or Presentation

Title of Journal: Deen TRAINER K1-5-1

Group or Society Sponsoring:

Date(s) of Conference or Meeting:

City/State:

Will proceedings be published? [ ] Yes [ ] No

Will material be handed out? [ ] Yes [ ] No

Title of Conference or Meeting:

CHECKLIST FOR SIGNATORIES

Review Required per WHC-CM-3-4	Yes	No	Reviewer Name (printed)	Signature	Date
Classification/Unclassified Controlled Nuclear Information	[ ]	[x]			
Patent - General Counsel	[x]	[ ]	B. D. Williamson	B D Williamson	5/19/92
Legal - General Counsel	[x]	[ ]	B. D. Williamson	B D Williamson	5/19/92
Applied Technology/Export Controlled Information or International Program	[ ]	[x]			
WHC Program	[x]	[ ]	G.T. BERLIN	GTB	5/18/92
Communications	[ ]	[x]			
DOE-RL Program	D. Solis 5/21/92 [x]	[x]			
Publications Services	[ ]	[x]			
Other Program	[ ]	[x]			
References Available to Intended Audience	[ ]	[x]			
Transmit to DOE-HQ/Office of Scientific and Technical Information	[ ]	[x]			

Information conforms to all applicable requirements. The above information is certified to be correct.

Author/Requestor (Printed/Signature): C.M. STOUT — Date: 5/13/92

Responsible Manager (Printed/Signature): B. G. ERLANDSON — Date: 5/13/92

Intended Audience

- [ ] Internal
- [ ] Sponsor
- [x] External

INFORMATION RELEASE ADMINISTRATION APPROVAL STAMP

Stamp is required before release. Release is contingent upon resolution of mandatory comments.

APPROVED FOR RELEASE — OFFICIAL DOCUMENT — NS — Date 5/21/92

Date Received: 5/19/92 NS

BD-7600-062 (04/90) Part 1

REQUESTOR:

H-2-62889
ID Number

~~Lead Author~~ C. M. STOUT	Phone 6-8076	MSIN B2-19	Other Author(s) or Requestor
Project or Program	Lead Org Code 81140		Sponsor Agency (DOE, DOT, NRC, USGS, etc.)
Editor N/A	Phone	MSIN	DOE/HQ Program (DP, EH, EM, NE, etc.)

Mandatory Comments*	Reviewer Name & Signature	Date	Resolution	Date

*Only mandatory comments are to be documented. All other comments should be made on a copy of the information submitted for review and returned to the author.

Legends/Notices/Markings

	Affix Yes	Affix No	Remove Yes	Remove No
Applied Technology	☐	☐	☐	☐
Business-Sensitive Information	☐	☐	☐	☐
Computer Software Notice	☐	☐	☐	☐
Copyright License Notice	☐	☐	☐	☐
Export Controlled Information	☐	☐	☐	☐
Legal Disclaimer	☐	☒ BW	☐	☐
Limited Disclosure	☐	☐	☐	☐
Patent Status	☐	☐	☐	☐
Predecisional Information	☐	☐	☐	☐

	Affix Yes	Affix No	Remove Yes	Remove No
Programmatic Notice	☐	☐	☐	☐
Proprietary Information	☐	☐	☐	☐
Purpose and Use	☐	☐	☐	☐
Thesis/Dissertation	☐	☐	☐	☐
Trademark Disclaimer	☐	☐	☐	☐
Unclassified Controlled Nuclear Information/Official Use Only	☐	☐	☐	☐

Responsible Manager (Printed/Signature)