DECLASSIFIED

[redacted] START

0028319

ISO-986
Page 1

[redacted]

This document consists of 116 pages. No. 26 of 80 copies. [redacted]

This document classified by

Paul W. Smith
Paul W. Smith

B-PLANT PHASE III FLOWSHEETS

Classification Cancelled (Change to CONFIDENTIAL)

By Authority of PL-CG-1 4.2.2, 4.4.6.1

By A. E. Barber 5-24-73

By

D. E. Larson

Fission Products Process Engineering
Research and Engineering Section

Classification Cancelled (Change to DECLASSIFIED)

By Authority of CG-PR-1 4.3.5, 4.4.3

By C. E. Barber 5-20-7[illegible]

August 31, 1967

ISOCHEM INC.

RICHLAND, WASHINGTON

JUN 1993 RECEIVED EDMC

NOTICE

THIS REPORT WAS PREPARED FOR USE WITHIN ISOCHEM INC. IN THE COURSE OF WORK UNDER ATOMIC ENERGY COMMISSION CONTRACT AT(45-1) - 1851, AND ANY VIEWS OR OPINIONS EXPRESSED IN THE REPORT ARE THOSE OF THE AUTHOR ONLY. THIS REPORT IS SUBJECT TO REVISION UPON COLLECTION OF ADDITIONAL DATA.

LEGAL NOTICE

THIS REPORT WAS PREPARED AS AN ACCOUNT OF GOVERNMENT SPONSORED WORK. NEITHER THE UNITED STATES, NOR THE COMMISSION, NOR ANY PERSON ACTING ON BEHALF OF THE COMMISSION:

A. MAKES ANY WARRANTY OR REPRESENTATION, EXPRESSED OR IMPLIED, WITH RESPECT TO THE ACCURACY, COMPLETENESS, OR USEFULNESS OF THE INFORMATION CONTAINED IN THIS REPORT, OR THAT THE USE OF ANY INFORMATION, APPARATUS, METHOD, OR PROCESS DISCLOSED IN THIS REPORT MAY NOT INFRINGE PRIVATELY OWNED RIGHTS; OR

B. ASSUMES ANY LIABILITIES WITH RESPECT TO THE USE OF, OR FOR DAMAGES RESULTING FROM THE USE OF ANY INFORMATION, APPARATUS, METHOD, OR PROCESS DISCLOSED IN THIS REPORT.

AS USED IN THE ABOVE, "PERSON ACTING ON BEHALF OF THE COMMISSION" INCLUDES ANY EMPLOYEE OR CONTRACTOR OF THE COMMISSION, OR EMPLOYEE OF SUCH CONTRACTOR, TO THE EXTENT THAT SUCH EMPLOYEE OR CONTRACTOR OF THE COMMISSION, OR EMPLOYEE OF SUCH CONTRACTOR PREPARES, DISSEMINATES, OR PROVIDES ACCESS TO, ANY INFORMATION PURSUANT TO HIS EMPLOYMENT OR CONTRACT WITH THE COMMISSION, OR HIS EMPLOYMENT WITH SUCH CONTRACTOR.

DECLASSIFICATION REVIEW BY [illegible] 9-15-79

[illegible]IZED DERIVATIVE DECLASSIFIER)

[redacted]

[redacted]

[redacted]

DECLASSIFIED

DECLASSIFIED

[redacted]

DISTRIBUTION

1-5 - AEC-RL, Attention: O.J. Elgert

Atlantic Richfield Hanford Company

6 - M. D. Alford
7 - J. W. Barnes
8 - S. J. Beard
9 - O. F. Beaulieu
10 - G. L. Borsheim
11 - G. R. Bray
12 - J. S. Buckingham
13 - M. H. Campbell
14 - A. H. Case
15 - H. L. Caudill
16 - R. P. Corlew
17 - D. A. Dodd
18 - J. A. Falkowski
19 - J. B. Fecht
20 - L. W. Finch
21 - C. J. Francis
22 - W. L. Godfrey
23 - G. L. Gurwell
24 - D. R. Gustavson
25 - M. K. Harmon
26 - W. M. Harty
27 - J. B. Kendall
28 - R. J. Kofoed
29 - D. E. Larson
30 - C. A. Lyneis
31 - R. Y. Lyon
32 - C. W. Malody
33 - R. W. McCullugh
34 - L. R. Michels
35 - G. C. Oberg
36 - D. E. Peterson
37 - H. C. Rathvon
38 - L. M. Richards
39 - G. L. Ritter
40 - R. E. Roberts
41 - D. J. Rochon
42 - W. C. Schmidt
43 - H. P. Shaw
44 - R. J. Sloat
45 - O. V. Smiset
46 - P. W. Smith
47 - R. E. Smith
48 - R. E. Tomlinson
49 - J. H. Warren
50 - L. L. Zahn
51-52 - 200 File

Battelle Northwest Laboratory

53 - J. M. Atwood
54 - A. G. Blasewitz
55 - L. A. Bray
56 - R. E. Burns
57 - C. R. Cooley
58 - D. R. de Halas
59 - K. M. Harmon
60 - B. W. Mercer
61 - R. L. Moore
62 - A. M. Platt
63 - G. L. Richardson
64 - F. P. Roberts
65 - W. W. Schulz
66 - E. E. Voiland

67-80 - Extra

DECLASSIFIED

[redacted]

9318022.1429

DECLASSIFIED

[redacted]

CONTENTS

Page

1.0 INTRODUCTION ---------- 4

2.0 PROCESS DESIGN BASES AND CAPACITY ---------- 5

3.0 PROCESS DESCRIPTION ---------- 6

3.1 Removal of Supernates and Sludges from Underground Tanks ---------- 6

3.2 HEAD END TREATMENTS ---------- 7

3.2.1 PAW and ZAW Solids Treatments ---------- 7
3.2.2 PAS Metallic Ion Removal ---------- 8

3.3 SOLVENT EXTRACTION AND ORGANIC TREATMENT ---------- 8

3.3.1 PAW Solvent Extraction ---------- 10
3.3.2 ZAW Solvent Extraction ---------- 11
3.3.3 PAS Solvent Extraction ---------- 11
3.3.4 Organic Treatment ---------- 12

3.4 ION EXCHANGE ---------- 12

3.4.1 PSN Ion Exchange ---------- 13
3.4.2 PSS Ion Exchange ---------- 14

4.0 PROCESS WASTE DISPOSAL ---------- 15

5.0 ALTERNATE FLOWSHEETS ---------- 16

5.1 PAS FLOWSHEET - Sludge Preparation - Pu, Np, and U Recovery ---------- 17

5.2 PAS FLOWSHEET - Calcium Removal from Rare-Earth Product ---------- 17

5.3 PAW FLOWSHEET - Promethium-Cerium Separation ---------- 17

5.4 STRONTIUM PURIFICATION ---------- 18

REFERENCES ---------- 19

FIGURES AND TABLES ---------- 20-116

DECLASSIFIED

[redacted]

DECLASSIFIED

B-PLANT PHASE III FLOWSHEETS

1.0 INTRODUCTION

Over a number of years, the Chemical Processing Department has developed an effective program for the long-term containment and disposal of "high-level" radioactive wastes. The wastes are generated from the chemical processing of irradiated nuclear fuels. They consist primarily of aqueous solutions and associated solids from the solvent extraction separation of uranium and plutonium. Since Isochem Inc. assumed operation of the chemical separations areas at Hanford on January 1, 1966, the program has been continued and vigorously pursued. The goals of the Waste Management Program are:

1. Assure isolation of hazardous radioisotopes from important life forms for centuries;

2. Minimize time to achieve long-term safety;

3. Minimize cost to develop and implement the program;

4. Isolate, as economically justified, selected fission products for beneficial use.

A complete description of program justification, goals, and methods, is presented in References 1 and 2.

A key step in the success of the Waste Management Program is the removal and isolation of the long-lived, heat-emitting fission products from current and stored Purex high-level wastes. This step allows the remaining wastes to be solidified in existing tanks for safe long-term storage within five to eight years from their generation. The segregated fission products, strontium and cesium, are stored in solution for future disposal or processed for commercial applications.

This document presents the flowsheets currently planned for treatment of current and stored Purex high-level wastes to attain the Waste Management Program goals. The flowsheets were originally published in Reference 3 and later supplemented by Reference 4. Additional work was performed to improve and optimize the flowsheets. Battelle Northwest Laboratories (BNWL) did much of the development work which is primarily summarized in Reference 5. Also, an extensive test program was conducted at the Semi-works to develop and test the D2EHPA solvent extraction technology. Alternate flowsheets which are applicable to specific product recovery and purification are also presented in this document. Such radioisotopes as strontium, rare earths, neptunium, uranium and plutonium may be recovered for AEC use or commercial application. A summary of the figures and flowsheets is stated in Tables 1 and 2, respectively. B-Plant feed stream nomenclature is defined in Table 3.

DECLASSIFIED

2.0 PROCESS DESIGN BASES AND CAPACITY

The basis for B-Plant design is to attain the goals of the Waste Management Program. This is accomplished by providing the plant with capacity to process all Purex and selected Redox high-level stored waste generated before plant startup in a five-year period and concurrently all high-level acid wastes discharged from Purex after B-Plant startup.

The processing operation for current acid wastes consists of separating the rare earths, strontium and cesium from one another by solvent extraction. The short-lived rare earths are stored in underground tanks for decay. The long-lived strontium is stored in B-Plant as solution for further disposal. The long-lived cesium is routed back to boiling waste tanks for temporary alkaline storage until the accompanying short-lived fission products decay to an acceptable level. After the sludge settles in three to five years, the supernate containing cesium is returned to B-Plant for cesium removal. The rare earths are segregated to permit solidification of the bulk wastes two to four years earlier.

The objectives of removing and processing the tank farm sludges are to recover residual radioactive cesium from the sludge and to segregate the strontium from the remaining sludge wastes by solvent extraction after suitable head-end treatments. The strontium is stored as a liquid for future disposal, and the remaining sludge wastes may be sent to an In-Tank Solidification unit for immobilization as a salt cake. The sludge contains five to ten percent of the total cesium in a tank. It is tentatively planned to process the sludge in all A and AX farm tanks containing neutralized Purex Acid Wastes (PAW). Also the 107, 108, 109, 110, 111, 112, and 114-SX tanks contain sufficient quantities of radionuclides to warrant processing. A five-year period was selected as being a reasonable time for processing the stored wastes. Based on a seven-day week operation, sludge mining and processing will terminate in FY-1973.

The supernates associated with the above high-level storage tanks, the cesium leach solutions from sludge preparation, and other tank supernates containing significant concentrations of cesium are processed by ion exchange for cesium removal. The eluted cesium is then concentrated and stored for future disposal, and the ion exchange wastes are routed to an In-Tank Solidification unit for immobilization in a salt cake.

The instantaneous B-Plant processing rates of the various feed streams are presented in Table 4. The capacities listed are based on 100 percent operating efficiencies. The over-all plant operating efficiency is expected to be about 72 percent. The waste fractionization flow scheme is illustrated in Figure I.

9313022.HPE

3.0 PROCESS DESCRIPTION

3.1 Removal of Supernates and Sludges from Underground Tanks

The purpose of the 244-AR Vault complex is to remove the supernate and sludge from A and AX Farm storage tanks and prepare the sludge for B-Plant processing. To process the contents of a high-level waste storage tank in East Area the supernate is first removed to lag storage in the C Tank Farm via the appropriate vault or other provided lines, as shown in Figure I, for subsequent cesium removal in B-Plant. The supernates in the A and AX Farm will be diluted 10-20 percent before ion exchange processing to prevent transfer pump cavitation and solids precipitation and plugging of a transfer line.

The flowsheet for the foregoing AR Vault processing operations is shown in Figure VI and Table 13. The flowsheet originally proposed by J.J. Shefcik[6] and the supporting data[7] were used as a basis for the Table 13 flowsheet.

The sludges are incrementally sluiced from the tank using high-pressure raw water at 80 C and flowing at 600 gpm through a one-inch sluice nozzle. The sluice water is recirculated between the tank and TK-002 in the vault until sufficient solids have accumulated in the settling tank (TK-002) for processing. Upon termination of sluicing, the sluicing water contains a significant concentration of Cs-137 (1-3 curies per gallon) and is transferred to lag storage in the C-Farm to await further processing in B-Plant for cesium removal. After the solids have been washed with part of the next sluicing water batch at 80 C, a portion of the solids is slurried to another vault tank (TK-004) where it is partially dissolved with nitric acid to yield a final solution acid concentration of 0.1 molar. The acidified sludge solution, PAS, is transferred to TK-003 in the 244-CR Vault to await further processing in B-Plant. The remaining solids are slurried to the acidification tank in additional batches until the slurry receiver tank is empty. Then the balance of the sluicing water for the next sluicing run is added to the slurry receiver and sluicing is resumed. The residual solids in TK-004 from the sludge acidification steps are digested in a strong sodium hydroxide solution at 80 C to aid in fission product and transuranic element removal from the solids. The caustic solution is then slurried into TK-002 where it will be further processed with the next sludge batch received from the tank farm. These residual solids are repeatedly treated and recycled in this manner until it is determined that the colids can be discarded. The above cycles are continued until all the sludge is removed from the tank.

It is presently planned to sluice all tanks in the A and AX Farms containing neutralized PAW and tanks 107, 108, 109, 110, 111, 112, and 114 in the SX Farm. It is presently estimated that 2-3 tanks in the A or AX Farm can be processed per year, and the noted tanks in the SX Farm in one to two years. The SX tanks will be processed in the planned SR Vault complex.

It is expected that about 20-30% Pu; 1-25% Np; 1-10% U; 20-35% Am; 1-20% Sr; and about 1% other fission products will be lost on residual solids.

Strontium losses will usually be about 2%. The proposed processing time cycle of 5.8 days for a 440-ton equivalent uranium sludge is shown in Table 14. This cycle assumes 100% over-all operating efficiency (OAE).

The flowsheet was based mainly on the 103-A tank sludge analyses shown in Table 12. It cannot be assued that the stated composition or flowsheet is typical since sludge compositions vary from tank to tank and at different levels within the tank. The flowsheet will have to be altered with the changing compositions. The anion composition for the 103-A tank is not well defined, and the composition shown is a best estimate.

Little work has yet been done on the Redox Sludge Preparation Flowsheet, but it is expected to be similar to the above.

3.2 HEAD END TREATMENTS

3.2.1 PAW and ZAW Solids Treatments

The PAW and ZAW flowsheets are similar. The principal differences in the PAW and ZAW feed streams are the relatively high aluminum, fluoride, and fission product concentrations of ZAW. The PAW composition and head-end flowsheet are shown in Tables 5 and 6, respectively. The ZAW composition and head-end flowsheet are included in Tables 9 and 10, respectively. Schematic diagrams of the PAW and ZAW flowsheets are illustrated in Figures II and IV. The time cycle for current waste head-end processing is presented in Table 7.

Since a minimum of work has been done on Zirflex waste processing flowsheets, some flowsheet adjustments may be needed to obtain satisfactory flowsheet performance. The flowsheets are based on recent process developments done by F. P. Roberts(8).

The denitrated Purex current acid wastes from aluminum-clad fuel (PAW) and Zircaloy II clad fuel (ZAW) as received from the Purex plant contain 1-10 percent solids by volume. Roughly 55% of the Sr and 70% of the rare earths are associated with these solids. To remove about 98% of the Sr and rare earths from the solids, a carbon metathesis process is used.

The PAW which is initially stored in the AR Vault is agitated and transferred in 3100-gallon batches to a B-Plant receiver tank where the solids are allowed to settle. The supernate is decanted from the tank, and a 0.5M caustic - 1.0M carbonate metathesis solution added. After the metathesis solution has digested at 80 C for one hour while agitating, the solids are allowed to settle. The metathesis cake is washed with 0.1M Na_2CO_3 and the cake is dissolved with 1.5M HNO_3. The dissolved cake is stored in a separate tank from the supernate to prevent precipitation of the rare earths. These two stored solutions are crude feed for the solvent extraction battery. The remaining solids containing 1 - 2 percent of the Sr and rare earths are slurried to the high-level waste disposal system with the other supernate and wash wastes.

9313022.1400

This system can process 4500 gpd on a 100% OAE basis. This processing rate is compatible with good extraction battery performance. PAW is campaigned in B-Plant for two weeks to a month at a time, and there is about a month between PAW campaigns when Purex and B-Plant are running smoothly at a 72 percent OAE.

3.2.2 PAS Metallic Ion Removal

The PAS as received in B-Plant contains relatively high concentrations of iron and aluminum. To make processing of PAS economical, the iron and aluminum concentration levels must be significantly reduced to proportionally reduce the solvent extraction complexant costs. A sulfate strike - carbonate metathesis process is used to attain the above goals, and in addition, a concentration factor of about 10 is attained across this step.

The flowsheet is illustrated in Figure VII and Table 15. The proposed time cycle is shown in Table 16. Little work has been done on the RAS metallic ion removal flowsheet, but it is expected to be similar to that for PAS.

A 1400-gallon batch of PAS is transferred from the CR-Vault to the B-Plant sulfate strike tank where it is butted with 6.0M $NaHSO_4$ and 1.8M Na_2CO_3 to a final pH of 1.0 and sulfate concentration of 1M SO_4. The solution is digested at 80 C for one hour before the 1.0M $Pb(NO_3)_2$ is added. The lead sulfate acts as a carrier for the balance of strontium in solution. The solution is digested for another hour at 80 C.

The supernate is then decanted off, and the above procedure repeated for two more 1400-gallon PAS batches. The cake is then water washed and slurried into the metathesis tank where the metathesis solution of 5.0M caustic - 0.5M carbonate solution is added. The metathesis solution is digested at 80 C for one hour, and then washed twice with 0.1M Na_2CO_3. The cake is then dissolved with 1.7M HNO_3 and transferred to feed storage for the solvent extraction battery. In this processing, there are about 7.5% strontium and 5% rare earth losses.

The head-end processing rate for PAS is 3600 gpd at 100% OAE which is much slower than the 19,000 gpd PAS equivalent processing rate for the solvent extraction battery. Therefore, treated PAS must be accumulated until the storage tank is about filled before a solvent extraction run of adequate length can be made.

3.3 SOLVENT EXTRACTION AND ORGANIC TREATMENT

Upon completion of appropriate head-end treatments, the PAW, ZAW, and PAS wastes are processed by solvent extraction to separate the rare earths, strontium, and cesium with the other fission products. Since the solvent extraction technology is similar for the above streams, the basic process is discussed here, and the peculiarities are treated in subsequent sections. The PAW flowsheet is presented in Figure III and Table 8, the ZAW flowsheet in Figure V and Table 11, and the PAS flowsheet in Figure VIII and Table 17.

9313022.1400

The crude feed stock must be initially adjusted in TK-29-2 to make suitable feed for the extraction battery. Complexants such as trisodiumhydroxyethylethylenediaminetriacetate (HEDTA) or trisodiumnitrilotriacetate (NTA) are added to form complexes with the metallic ions in the feed. The complexant addition aids in obtaining the desired distribution ratios in the 1A Column for the different metals in the feed. A ten to twenty percent excess of complexant is generally added to the feed to insure adequate complexing and provide contingency for feed composition variations. Hydroxyacetic acid is added as a buffering agent. Since the metallic ion distribution ratio is sensitive to pH fluctuations, it is essential to provide pH control in the entire extraction battery. A small amount of tartaric acid is also added to the feed. It has been found that this addition increases extraction kinetics in the 1A Column. Finally the feed solution is adjusted to the desired pH with sodium hydroxide and transferred to the solvent extraction battery feed tank, TK-29-3.

The extraction battery is composed of four simple piston-pulsed columns. The 1A and 1S Columns form an extraction and scrub system. The battery feed and the 1S Column aqueous scrub streams enter the top of the 1A Column where contact is made with the organic. The organic is composed of 0.2M tributylphosphate (TBP) and 0.3M di-2-ethylhexylphosphoric acid (D2EHPA) in normal paraffin hydrocarbon (NPH) diluent. The D2EHPA is a metallic ion extractant and the TBP acts as a solvent modifier to prevent third phase formation and increases the strontium organic to aqueous distribution ratio. Generally the organic is made 0.04M to 0.15M Na before entering the 1A Column to aid in column pH control. In the 1A Column the strontium, rare earths, uranium, yttrium, calcium, significant neptunium, and trace quantities of other cations are extracted into the organic. The remaining anions and cations in the column feed are sent to waste.

The organic from the 1A Column is contacted with an aqueous solution in the 1S Column containing hydroxyacetic acid, sodium hydroxide, and a small complexant concentration. The acid is for pH control, the sodium hydroxide is used to obtain the correct initial aqueous pH before column entry, and the complexant is included to remove small amounts of undesirable metallic ions which may have extracted from the 1A Column. The primary function of the 1S Column is to scrub sodium from the organic entering the column. The aqueous pH of the scrub stream is initially adjusted so that the pH of the aqueous stream entering the 1A Column will be near or at the desired operating pH of the 1A Column.

In the 1B Column, the strontium is stripped from the organic with a dilute nitric acid solution. Also, a significant amount of calcium is stripped. Trace amounts of aluminum and other cations are stripped. As in the other columns, the pH control and flow ratios used in this column are important, and therefore, the proper initial nitric acid concentration must be used.

The rare earths, the bulk of the calcium, and trace amounts of other metallic ions and fission products are stripped by a concentrated nitric acid solution in the 1C Column.

931022.1480

Upon leaving the 1C Column, the organic still contains significant quantities of yttrium and small concentrations of other cations. To scrub these elements from the solvent and aid in restoring solvent quality, the solvent is batch contacted with 1.4M NaOH - 0.1M Na_2 tartrate to remove the bulk of these impurities in TK-27-3. The contact is made at ambient temperature.

This contact also removes the mono-2-ethylhexylphosphoric acid which is a radiation-induced degradation product of D2EHPA and impairs solvent quality and strontium extraction efficiency. The solvent is then butted with concentrated nitric acid to obtain the proper sodium concentration for recycle.

The frequency range for the extraction battery pulse generators is expected to be from 45 to 75 cycles per minute.

3.3.1 PAW Solvent Extraction

The PAW solvent extraction flowsheet is illustrated in Figure III and shown in Table 8. In this process, NTA is used as the metallic ion complexant since it is relatively inexpensive and has good performance characteristics. A 1.2:1, aqueous to organic flow ratio is used in the 1A Column which results in a solvent loading of about 12%. The 1A Column is operated at a pH of 4.2. By increasing the 1A Column pH the rare earth losses are increased, and by decreasing the pH the strontium losses are increased. In the 1S Column, a 1:5, aqueous to organic ratio is used at an initial aqueous pH of 2.4. A small amount of NTA is placed in the 1SS to adi in undesirable metallic ion removal. The strontium is stripped in the 1B Column with a 1:5 aqueous to organic flow ratio. The initial pH of the solution is 1.4 and the final pH is 1.75. This pH must be carefully controlled since low pH will lead to excessive stripping of rare earths and high pH causes excessive losses of strontium. In the 1C Column, the rare earths are stripped from the organic with a 1:5, aqueous to organic flow ratio of nitric acid. The initial concentration of nitric acid is 2.5M.

It is expected that 98% of the strontium and rare earths in the battery feed will be recovered in the proper stream. It is also anticipated that about 96% of the americium entering the extraction battery will be recovered with the rare earths.

3.3.2 ZAW Solvent Extraction

The ZAW solvent extraction flowsheet is illustrated in Figure V and Table 11. In this process HEDTA is used as the metallic ion complexing agent instead of NTA. This selection was made based on the unacceptable fission product recovery performance of NTA with ZAW types of feed. As indicated in the flowsheet, significantly more complexant is required for ZAW feed than PAW. This is due to the relatively high concentration of aluminum. The flow and pH conditions used in the columns are similar to those used in the PAW flowsheet. In this flowsheet, the 1A Column operates at a pH of 3.9 to optimize strontium and rare earth recoveries, and the solvent is loaded to 14%. This higher loading results from using the same flow conditions as PAW, but the fission product concentration in the feed is higher. Also, the 1SS stream contains a low concentration of HEDTA to complex undesirable metallics which are extracted in the 1A Column organic.

Based on preliminary pilot plant data, it is anticipated that 97% of the strontium and about 90% of the rare earths will be recovered from the column feed in the proper stream. The rare earth recovery is lower than desired, but it is felt that this recovery can be significantly improved with further flowsheet optimization and experience. Americium recoveries in the rare earth stream are expected to be about 75% of the americium entering the battery. It is also felt that this recovery can be significantly improved.

3.3.3 PAS Solvent Extraction

The PAS solvent extraction flowsheet differs from the PAW and ZAW solvent extraction flowsheets. This deviation is due principally to the high concentration of aged fission products in the crude feed and to a lesser extent the lead contained in the feed. The PAS solvent extraction flowsheet is illustrated in Figure VIII and Table 17. In this flowsheet NTA is used as complexant due to its economy and satisfactory performance. The balance of the feed makeup is similar to the other solvent extraction flowsheets except that the adjusted crude feed is diluted by a factor of two. This dilution is necessary to establish satisfactory aqueous to organic flow ratios in the columns for adequate column performance and increase the run time to reduce fission product losses on battery startup and shutdown. A 1.6:3, aqueous to organic flow ratio is used in the 1A Column which results in a solvent loading of 25%. The 1A Column is operated at a pH of 4.2 as in the PAW flowsheet. 1S Column operation is similar to the PAW flowsheet except that the absolute flow rates are higher. In the 1B Column, the pH conditions resemble those of previous flowsheets, but the nitric acid to organic ratio is increased to 1:3 to maintain the proper pH conditions. In the 1C Column, the rare earths are stripped with concentrated nitric acid. An aqueous to organic ratio of 4:30 is used. This is felt to be about the minimum aqueous to organic ratio that can be used and still maintain good operational control of the column.

It is expected that 98% of the strontium and 99% of the rare earths entering the extraction battery will be recovered in the proper streams. It is anticipated that about 98% of the americium in the column feed will be recovered.

Redox acidified sludge solvent extraction treatment is expected to be similar to that for PAS.

3.3.4 Organic Treatment

When the organic leaves the 1C Column, it contains virtually all the yttrium and uranium which entered the extraction battery. Also, significant amounts of aluminum, iron, chromium, zirconium, niobium, ruthenium and cerium are contained in the solvent. These impurities must be removed to maintain the required extraction and stripping performance. These impurities impair performance by contributing to the radiation degradation and loading the solvent.

Studies have indicated that a batch contact of the organic with a 2:1 organic to 1.4M NaOH and 0.1M Na_2 Tartrate solution will remove the preceding contaminants. Recent laboratory work[9] has demonstrated this wash to also remove the mono-2-ethylhexylphosphoric acid (M2EHPA) from the organic. The M2EHPA is a radiation degradation product of D2EHPA and adversely affects the performance characteristics of the solvent. The strontium extraction distribution coefficient is reduced and the rare earths are not as easily stripped from the organic. The same studies also obtained yttrium and iron decontamination factors of 1800 and 330 from the organic.

Semiworks solvent wash tests[5] showed Ce-144, ZrNb-95, and Ru-106 organic decontamination factors of 19, 55, and 2, respectively. In these tests a 1:1 organic to aqueous ratio of 2.0M NaOH - 0.1M Na_2 Tartrate solution was contacted with 0.35M D2EHPA - 0.22M TBP - Soltrol-170. The proposed organic wash performance is expected to be comparable and hinders the precipitation of iron from the aqueous wash solution which is difficult to handle. The uranium washed from the organic precipitates as the diuranate.

3.4 ION EXCHANGE

Cesium ion exchange feed solutions are derived from two principal sources. The richest feed, containing from 8 to 17 curies/gallon of Cs-137, is obtained from high-level tank farm supernates (PSN, RSN). A composition for Purex tank farm supernate (PSN) is included in Table 18. The analysis is a composite of various A Farm tanks from a previous study[10]. The composition varies from tank to tank and perhaps at different levels within a tank depending on the tank fill history and the supernate circulation.

9313022.1495

The second source is solution used to sluice mine sludge from the high-level waste storage tanks. This solution (PSS, RSS) may contain from 1 to 3 curies/gallon of Cs-137 after sluicing. A composition of this solution (PSS) for A farm mining operations is given in Table 22. As above, the analysis may vary significantly, depending on the sludge being sluiced. It is not felt that a typical composition can be stated for ion exchange feed stock, and flowsheets will have to be appropriately altered to fulfill Waste Management goals as specific feeds may require.

After supernate has been removed from a high-level tank, 100,000 to 300,000 gallons of water will be placed on top of the sludge to soften it. This accelerates sluice mining operations. The solution is expected to have about the same composition as sluice solution and will be processed for cesium removal.

The Purex tank supernate will be pumped from the originating tank to the 105-C tank in the C Tank Farm. The method used for A Farm supernate removal is illustrated schematically in Figure IX and shown in Table 19. Dilution water is added to the transfer pump inlet to prevent the pump from cavitating at the elevated supernate temperatures and salt crystallization in a transfer line. For the A and AX Farms, the sluicing and sludge softening solutions are transferred to the 105-C tank via TK-002 in the AR Vault. The 105-C tank is used as the feed lag storage tank for the ion exchange system in B-Plant. Since tank supernates and sluicing solutions are mixed in the 105-C tank, the feed to B-Plant will have a composition ranging between the two individual compositions.

The included flowsheets represent the two limiting cases where PSN and PSS only are processed. A 4:1, sodium to cesium ratio was selected as the goal for the product. If it is decided that higher sodium to cesium ratios are acceptable, slight flowsheet modifications can accommodate this end at small cost savings as discussed in subsequent sections. Cesium recoveries will be about 99% for all cesium feeds. Flowsheets for recovery of cesium from Redox supernates are under development for optimization by Battelle Northwest Laboratories.

3.4.1 PSN Ion Exchange

The PSN flowsheet is illustrated schematically in Figure X and shown in Table 20. The PSN is fed to the ion exchange column from the 105-C tank via two intermediate feed tanks.

The column is loaded by downflow until the over-all cesium breakthrough reaches 0.5%. This cumulative breakthrough occurs at an instantaneous cesium breakthrough of 7%. Based on experimental data, this breakthrough will occur after about 40 column volumes of feed have passed through the column. A feed flow rate of 50 gpm was selected to optimize the column loading and the time cycle.

After the column is washed with water to remove residual feed solution, about 95% of the sodium is scrubbed from the column with 7 column volumes of 0.2M $(NH_4)_2CO_3$. About 0.4% of the cesium is also eluted with the sodium during the scrub. The scrub solution flows down through the column.

Upon completing another column wash with water to remove any residual sodium solution, the cesium is eluted with 12 column volumes of 3.0M $(NH_4)_2CO_3$ - 2.0M NH_4OH at 50 C. The ammonium hydroxide aids in suppressing gassing of the eluent solution. The balance of the cesium and sodium is eluted at this time. Over-all cesium recoveries are expected to be 99%. Only about 0.1% of the cesium in the feed will be lost to column water washes.

The elution rate of the cesium is limited by the boil-off rate of the Cell 20 concentrator. If the Cell 20 concentrator capacity proves to be greater than the anticipated 8 gpm, the elution rate can be significantly increased.

Upon concentrating the eluted cesium, 98% of the ammonia and 93% of the carbon dioxide is recovered in the concentrator condenser and the off-gas scrubber system for reuse.

In the initial loadings of the column, some cesium is not eluted and builds up on the zeolite. The amount of sodium eluent used can be slightly reduced if a sodium to cesium ratio of higher than 4:1 is acceptable.

3.4.2 PSS Ion Exchange

The PSS flowsheet is illustrated schematically in Figure XI and shown in Table 22. The flowsheet is similar to the PSN flowsheet with some small variation. In the PSS processing scheme, the feed is only about 3.8M sodium instead of 5.1M. Thus, a larger volume of feed can be passed through the column before the specified breakthrough is reached. This volume is estimated to be 55 column volumes instead of the 40 for PSN.

To obtain a 4:1, sodium to cesium ratio in the cesium product, it is necessary to utilize a product recycle flowsheet as indicated. This mode of operation is required due to the high sodium to cesium ratio in the feed and the uneconomically high volume of sodium scrub which would be needed to obtain the desired ratio. The recycle would be added about the mid-point of the loading cycle by blending it as a batch with the normal feed. If the recycle is added too early, excessive cesium might be lost in the sodium scrub. If blended too late, excessive amounts of eluent will be required to elute it, or there will be high losses during the next loading cycle.

In the foregoing, cesium purity goals are not desired - the recycle can be eliminated and the flowsheet performed as for PSN. In this case, the cesium recovery efficiencies would be about the same, but the sodium to cesium ratio in the product would be about 10:1.

The ultimate requirements for cesium purity depend on the final disposition of the product. The recycle flowsheet may result in slightly higher cesium losses. Otherwise flowsheet performance should be similar to the PSN.

Several situations could arise during the course of processing. If the ion exchange feed contains significant concentrations of aluminum and the pH rises above 12 or drops below 4, there is a possibility that the aluminum may precipitate in the bed. Also, the loading curve may very significantly for similar types of feed. Any small amounts of strontium which may be contained in the feed will load on the column. Other metallic elements as rhodium, palladium, and technetium are in cation form and pass through the column.

4.0 PROCESS WASTE DISPOSAL

Process wastes generated from B-Plant are primarily aqueous solutions which may contain small amounts of solids. These solutions may be classified into three groups: 1) high-level; 2) intermediate-level; and 3) low-level. The origin and disposition of process wastes are indicated on appropriate flowsheet figures.

High-level boiling wastes are normally generated solely from the processing of current acid waste streams. If any special campaigns are made in B-Plant, such as fission product purification campaigns, the corresponding wastes would be considered as high-level and treated accordingly. These solutions are collected in two B-Plant tanks, TK-25-1 and TK-25-2. In TK-25-2, all solids treatment waste solutions and 1A Column wastes are collected. In TK-25-1, the 1C Column wastes and organic caustic-tartrate wash wastes are accumulated. The accumulated solutions are neutralized to a pH greater than 8. The contents of TK-25-1 and TK-25-2 are then alternately pumped via TK-003 in the AR Vault to appropriate storage tanks in the A, AX, or possibly AY Farms. The solutions containing cesium and short-lived fission products in TK-25-2 and the rare earths in TK-25-1 are segregated so that the major portion of the bulk salts can be solidified earlier. These two streams will initially be stored in a common AX Farm tank until space in the A Farm is available for separate storage. Estimates of average high-level waste compositions have been made in reference 11.

High-level solidifiable wastes arise from the B-Plant treatment of tank farm sludges and supernates. Sources of these wastes are the PAS head-end treatment waste streams of sulfate strike supernates and washes and metathesis supernates and washes. From the solvent extraction system, contributing streams are the 1A Column wastes, the 1C Column rare earth stream, the the organic wash wastes. From the ion exchange system, the column wash wastes and the sodium scrub stream contribute. Finally, the

93M022.405

overheads from the Cell 5 concentrator are fed to the solidifiable waste handling system. The primary elements of this system consist of TK-24-1 where the preceding streams are collected and the Cell 23 concentrator which concentrates these wastes. Subsequent to concentration, the waste concentrate is routed to an In-Tank Solidification unit where it is immobilized in a salt cake. Wastes are neutralized to a pH of greater than 8 before routing from B-Plant. Ion exchange feed wastes are routed directly to an In-Tank Solidification unit upon exit from the column. The volumes and average composition of these wastes generated from B-Plant are given in reference 12. The compositions and generation rates of the above streams being routed to the In-Tank Solidification units are indicated in Table 28.

B-Plant intermediate-level wastes have high potential of containing small amounts of activity. These wastes which are cribbed, are normally water from condensed steam. The bulk of this condensate is process condensate generated from the Cell 23 concentrator overheads and the process steam condensate from tube bundles of the Cell 23, 20 and 5 concentrators. Other minor contributors to the stream are steam condensate from the air heaters in Cell 22 and intermittent cooling water flows from various process vessels. The Cell 23 concentrator overheads are routed to Crib 216-B-12, and the concentrator tube bundle steam condensate is sent to Crib 216-B-55.

The low-level wastes having a low potential for contamination are routed to the B-Plant swamp. These wastes are composed mainly of process vessel and concentrator condenser cooling water.

A further description of the anticipated intermediate- and low-level wastes and associated volumes and compositions is contained in reference 13. Anticipated waste generation rates of these wastes from the fractionization complex are shown in Table 29.

If the B-Plant organic inventory is degraded to the point that it is not fit for further processing activities, it will be disposed of by burning.

5.0 ALTERNATE FLOWSHEETS

A series of alternate flowsheets has been developed to aid in the recovery and purification of selected fission products or transuranium elements should any of these programs be undertaken in B-Plant at Hanford. The supplemental flowsheets included are: 1) PAS Flowsheet - Sludge Preparation - Pu, Np, and U Recovery; 2) PAS Flowsheet - Calcium Removal from Rare-Earth Product; 3) PAW Flowsheet - Promethium-Cerium Separation; and 4) Strontium Purification.

9318022.1495

5.1 PAS FLOWSHEET - Sludge Preparation - Pu, Np, and U Recovery

Tank sludge preparation for Pu, Np, and U recovery is illustrated in Figure XII and Table 24. This process has been designed to maximize Pu, Np, and U recovery from the sludge contained in the high-level waste tanks at reasonable costs. Utilizing the proposed AR-Vault flowsheet shown in Table 14, it is anticipated that 25-30% of the preceding elements may be brought into solution during sluicing activities and lost in the PSS supernate. To prevent this loss, the sodium hydroxide addition in this flowsheet ensures that these elements are not leached from the solids. The flowsheet is otherwise similar to the presently proposed one. With this flowsheet it is expected that 90-95% of the U and Np will be recovered in the PAS solution. Process development data[14] indicate that only about 70% of the Pu appears in the PAS solution, and the bulk of the remaining Pu stays on the solids. It is felt that the proposed acid-base solids treatment will remova a large fraction of this residual Pu from the solids.

5.2 PAS FLOWSHEET - Calcium Removal from Rare-Earth Product

In the current processing scheme, one of the major impurities in the rare earth stream from the 1C Column is calcium. To remove this contaminant, the flowsheet diagrammed in Figure XIII and shown in Table 25, is proposed. In this process, the organic containing the bulk of the calcium and rare earths from the 1B Column is contacted with a 0.2M HNO_3 solution in the 1C Column. This acid scrub strips the calcium from the organic. Also, about 1% of the rare earths is removed from the organic. The solvent from the 1C Column is then batch contacted with 2.0M HNO_3 solution in TK-27-3 where 94% of the rare earths entering the extraction system is stripped. The ablance 5% of the rare earths is lost to other solvent extraction and organic wash streams. The organic is washed with caustic-tartrate solution in TK-26-1.

5.3 PAW FLOWSHEET - Promethium-Cerium Separation

To separate cerium from promethium and the balance of the rare earths the flowsheet illustrated in Figure XIV and Table 26 has been developed. This flowsheet is treated in more detail in a previous document[15]. The process consists of contacting the organic from the 1B Column containing the rare earths with a 2.0M HNO_3 - 0.005M $AgNO_3$ - 0.4M $Na_2S_2O_8$ solution in the 1C Column. The persulfate oxidizes the cerium from the 3 to the 4 valence state. This reaction is catalyzed by the silver ion. In the 4 valence state the cerium ion has a high organic to aqueous distribution ratio and thus remains in the organic. The balance of the rare earths is stripped from the organic in the 1C Column by the strong acid. In this step about 96% and 2% respectively,

of the cerium and rare earths remain in the organic and the balance entering the 1C Column is stripped. The percentages are based on the feed entering the extraction battery. The cerium containing organic from the 1C Column is contacted in TK-27-3 with a 0.15M $NaNO_2$ - 2.0M HNO_3 solution which reduces the Ce^{+4} to Ce^{+3} and extracts it into the aqueous phase. Over-all cerium recovery is expected to be about 95%. The organic is then washed as in rare earth - calcium separation flowsheet. To separate the balance of the rare earths from the sulfate, the rare earths are extracted into organic in TK-26-2 after the solution pH has been adjusted to 3.5. Then after decanting the aqueous from the tank, the rare earths are stripped from the organic with 1.0M HNO_3. The promethium-rare earth product may then be concentrated to the desired level providing the acid is sugar killed in a concentrator.

To provide for the storage, concentration, and denitration steps additional concentration and storage facilities would have to be provided in unused cells. Over-all promethium-rare earth recoveries are anticipated to be 94-95%.

5.4 STRONTIUM PURIFICATION

To purify strontium, virtually the same flowsheet would be used as has been proven in the Semiworks for the strontium recovery. A typical flowsheet for this process is illustrated in Figure XV and Table 27. The feed composition shown in this Table is not for any particular strontium product, but represents that which may be encountered. This flowsheet is similar to that explained in more detail in reference 16. The technology for the flowsheet is treated in detail in reference 17. In this flowsheet, the crude feed is butted with DTPA and acetic acid which provides the metallic ion complexant and buffering agent, respectively. The feed pH is adjusted with sodium hydroxide to 4.9. The feed is then contacted in the 1A Column with 0.3M D2EHPA and 0.2M TBP in NPH diluent where the strontium is extracted into the organic. In the 1S Column, the sodium is scrubbed with a 0.21M citrate - 0.06M DTPA solution. The strontium is then stripped from the organic in the 1B Column with a 1.0M citric acid solution. The 1B Column product solution is concentrated and the citrate destroyed in the Cell 5 Concentrator. A peroxide-nitric acid solution is used to kill the citrate. The proper blend of acid and peroxide must be used to avoid severe foaming or an explosion hazard in the concentrator. These precautions are treated in reference 17. The organic treatment would be similar to that in the previous flowsheets.

REFERENCES

1. Beard, S. J., et al, "Waste Management Program - Chemical Processing Department", RL-SEP-894, December 28, 1965.

2. Smith, P. W. and R. E. Tomlinson, "Hanford High-Level Waste Management Reevaluation Study", ISO-981, August 31, 1967.

3. Rathvon, H. C. and P. W. Smith, "Waste Management Program Process Flowsheets", HW-78061, July 8, 1963.

4. Smith, P. W., "Waste Management Program Supplemental Process Flowsheets", HW-81020, March 2, 1964.

5. Buckingham, J. S., Editor, "Waste Management Technical Manual", ISO-100, To be issued.

6. Shefcik, J. J., "Process Flowsheet for Purex Tank Farm Sludge Preparation", HW-79235, October 15, 1963.

7. McKenzie, T. R., "Final Report - Chemical and Radiochemical Analyses of TK-241-A-103 Sludge", HW-77380, April 10, 1963.

8. Personal Communication, F. P. Roberts to D. A. Bruce.

9. Personal Communication, W. W. Schulz to G. L. Ritter.

10. Beard, S. J., "Purex Tank Farm Supernatant Solution Composition", RL-SEP-183 RD, December 5, 1964.

11. Personal Communication, D. E. Larson to W. C. Schmidt, July, 1967.

12. Letter, D. E. Larson to G. C. Oberg, "Specification of ITS Feed Streams for Waste Management Program Reevaluation Study", May 19, 1967.

13. Letter, D. E. Larson to G. L. Hanson, "Definition of B-Plant Low-Level Wastes for Waste Management Program Reevaluation Study", June 8, 1967.

14. Unpublished Data, W. W. Schulz.

15. Ritter, G. L., "Process Flowsheet for Continuous Separation of Cerium from Promethium at B-Plant", ISO-42, January 13, 1966.

16. Ritter, G. L. and P. W. Smith, "Waste Management Program Integration with Fission Product Purification", HW-83058 PT1, June 30, 1964.

17. Fission Products Process Engineering, "Specifications and Standards - Strontium Purification at the Strontium Semiworks", RL-SEP-20, February 15, 1965.

9310022.1496

TABLE 1

LIST OF FIGURES

Figure No.	Title
I.	Waste Fractionization Flowsheet
II.	PAW Flowsheet - Solids Treatment
III.	PAW Flowsheet - Solvent Extraction
IV.	ZAW Flowsheet - Solids Treatment
V.	ZAW Flowsheet - Solvent Extraction
VI.	PAS Flowsheet - Sludge Preparation
VII.	PAS Flowsheet - Metallic Ion Removal
VIII.	PAS Flowsheet - Solvent Extraction
IX.	PSN Flowsheet - PSN Removal from A-Farm
X.	PSN Flowsheet - Cesium Recovery
XI.	PSS Flowsheet - Cesium Recovery
XII.	PAS Flowsheet - Sludge Preparation - Pu, Np, and U Recovery
XIII.	PAS Flowsheet - Calcium Removal from Rare Earth Product
XIV.	PAW Flowsheet - Promethium-Cerium Separation
XV.	Strontium Purification

0051 22 0E3

TABLE 2

LIST OF TABLES

Table No.	Title
1	List of Figures
2	List of Tables
3	Waste Stream Nomenclature
4	B-Plant Processing Capacities
5	Purex Acid Waste Composition
6	PAW Flowsheet - Solids Treatment
7	PAW Flowsheet - Solids Processing Time Cycle
8	PAW Flowsheet - Solvent Extraction
9	Zirflex Acid Waste Composition
10	ZAW Flowsheet - Solids Treatment
11	ZAW Flowsheet - Solvent Extraction
12	Purex Sludge Composition
13	PAS Flowsheet - Sludge Preparation
14	PAS Flowsheet - Sludge Preparation Time Cycle
15	PAS Flowsheet - Metallic Ion Removal
16	PAS Flowsheet - Metallic Ion Removal Time Cycle
17	PAS Flowsheet - Solvent Extraction
18	Purex Supernate Composition
19	PSN Flowsheet - PSN Removal from A-Farm
20	PSN Flowsheet - Cesium Recovery
21	PSN Flowsheet - Cesium Recovery Time Cycle

9303022.1501

TABLE 2 - Continued

Table No.	Title
22	PSS Flowsheet - Cesium Recovery
23	PSS Flowsheet - Cesium Recovery Time Cycle
24	PAS Flowsheet - Sludge Preparation - Pu, Np, and U Recovery
25	PAS Flowsheet - Calcium Removal from Rare Earth Product
26	PAW Flowsheet - Promethium-Cerium Separation
27	Strontium Purification
28	High-Level Solidifiable Waste Compositions and Generation Rates
29	Waste Fractionization - Low- and Intermediate-Level Generation Rate

931022.1519

TABLE 3

WASTE STREAM NOMENCLATURE

Code	Stream	Source
PAW	Purex Acid Wastes	Concentrated and denitrated HA Column wastes from Purex for aluminum-clad fuels
ZAW	Zirflex Acid Wastes	Concentrated and denitrated HA Column wastes from Purex for Zircaloy II-clad fuels
PAS	Purex Acidified Sludge	A and AX Tank Farm sludges which have been dissolved in acid
RAS	Redox Acidified Sludge	SX Tank Farm sludges which have been dissolved in acid
PSN	Purex Supernate	A, AX, and some C-Tank Farm supernate
RSN	Redox Supernate	SX and other selected West Area Tank Farm supernates
PSS	Purex Sludge Supernate	Supernate derived from water used to sluice sludges from A and AX Tank Farms
RSS	Redox Sludge Supernate	Supernate derived from water used to sluice sludges from the SX Tank Farm

9313022.5018

TABLE 4

B-PLANT PROCESSING CAPACITIES

Basis: Full operating capacity at 100% over-all operating efficiency

Process	Stream Basis	Gallons/Day
1) PAW Solids Treatment	PAW	4,600
2) PAW Solvent Extraction	PAW (1AF)	4,600 (6,900)
3) ZAW Solids Treatment	ZAW	3,900
4) ZAW Solvent Extraction	ZAW (1AF)	3,900 (9,200)
5) PAS Sludge Preparation	PAS (T U)	4,200 (88 T U)
6) PAS Metallic Ion Removal	PAS	3,600
7) PAS Solvent Extraction	PAS (1AF)	19,000 (4,800)
8) PSN Ion Exchange	PSN	30,000
9) PSS Ion Exchange	PSS	35,000

9313022.1504

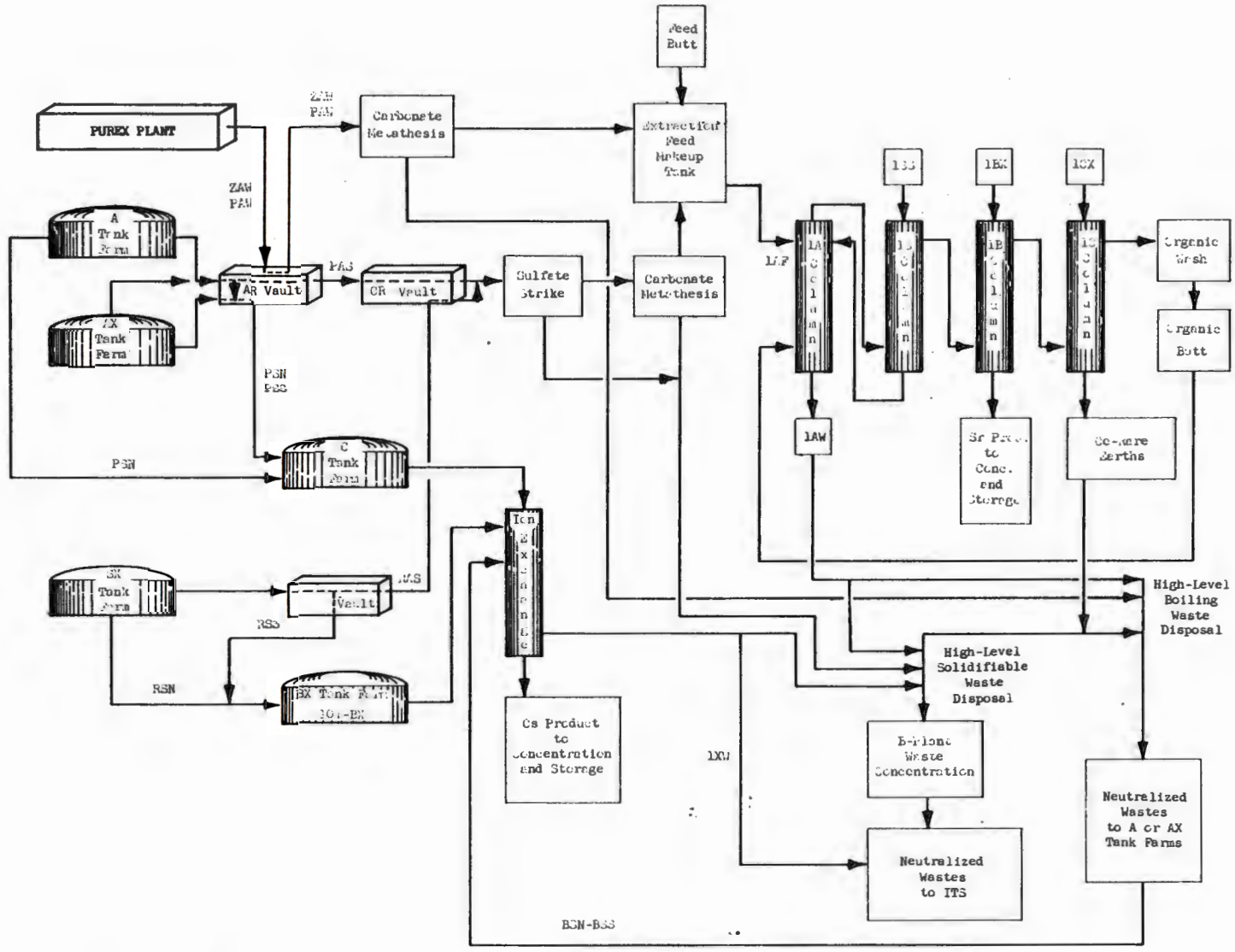

FIGURE I

WASTE FRACTIONIZATION FLOWSHEET

[redacted]

TABLE 5

PUREX ACID WASTE COMPOSITION (PAW)

	M		
H^+	0.95	Rh	0.00043
Fe	0.3	Pd	0.00034
Al	0.03	Pu	0.000006
Na	0.43	Np	Trace
Cr	0.019	U	0.00022
Ni	0.011	Tc	0.00070
Ca	0.0013	Sr	0.0013
Mn	Trace	Cs	0.0019
Mg	Trace	Ce	0.0022
$SiO_3^=$	0.011	Pm	0.00028
NO_3	1.2	Am	0.00000175
SO_4	0.60	Sb	0.000011
PO_4	0.012	Zr	0.0043
F	0.0045	Nb	0.00016
		Ru	0.0018
		Sm	0.00031
		Y	0.00067
		TRE(4)	0.0040

Solids: Denitrate 1WW: 1-10% by volume
1WW: 1-5% by volume
Composition: $Zr_3(PO_4)_4 \cdot x\ H_2O$ (30% Vol.)
$SiO_2 \cdot H_2O$ (60% Vol.)
metal silicates, $BaSO_4$, and $PbSO_4$ (10% Vol.)

	Ci/Gal		
Sr-90	37	pH	0
Sr-89	33	Volume	50 Gal/T.U.
Cs-137	40	Flow - GPH	69 (100% OAE) from Purex
Ce-144	880		50 (72% OAE)
Pm-147	150	Sb-125	3
Am-241	0.0051	Zr-Nb-95	3600
Temp.	Ambient	Ru-103	460
Sp.Gr.	1.15	Sm-151	0.50
Btu/Hr/Gal	125	Y-91	1200
		Ce-141	540
		Ru-106	130

Notes:
(1) Flow based on 4.0 capacity for normal Al clad fuels.
(2) Volume based on past operating experience.
(3) Composition:
a) Chemical: RL-SEP-320
b) Fission Products: HW-75978
c) Age - 120 day
d) 20% Tc goes with Pu product
e) All other fission products quantitative in PAW (some Ru lost)
(4) Excludes Ce, Pm and Sm

[redacted]

9313022.1501

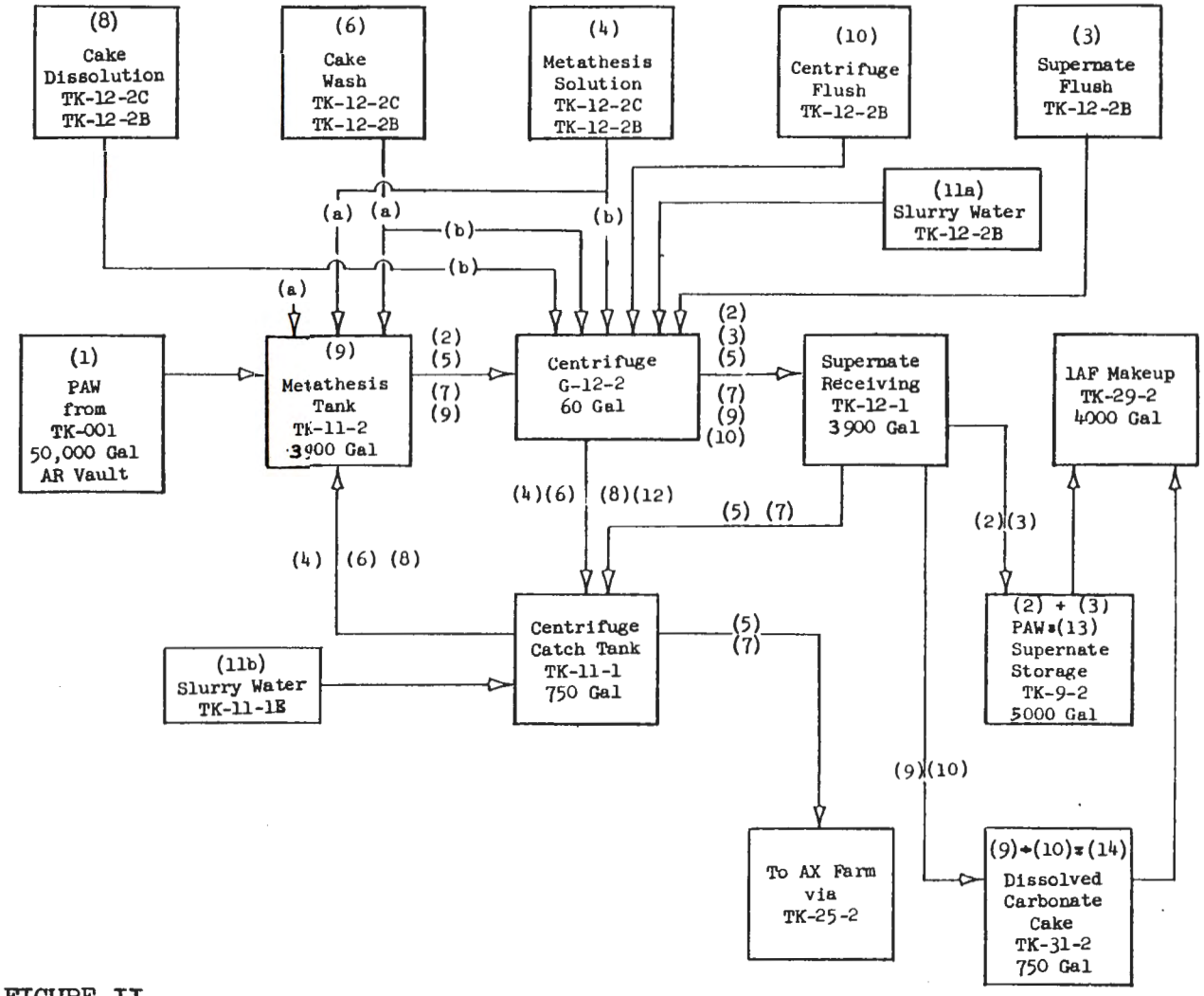

FIGURE II

PAW FLOWSHEET

SOLIDS TREATMENT

[redacted]

TABLE 6

PAW FLOWSHEET
SOLIDS TREATMENT

(1) PAW

M

H^+	0.95	Rh	0.00043
Fe	0.3	Pd	0.00034
Al	0.03	Pu	0.000006
Na	0.43	Np	Trace
Cr	0.019	U	0.00022
Ni	0.011	Tc	0.00070
Ca	0.0013	Sr	0.0013
Mn	Trace	Cs	0.0019
Mg	Trace	Ce	0.0022
$SiO_3^=$	0.011	Pm	0.00028
NO_3	1.2	Am	0.00000175
SO_4	0.60	Sb	0.000011
PO_4	0.012	Zr	0.0043
F	0.0045	Nb	0.00016
Solids 1-10% Vol.		Ru	0.0018
		Sm	0.00031
		Y	0.00067
		TRE(1)	0.0040

Ci/Gal

Sr-90	37	Am-241	0.0051
Sr-89	330	Sb-125	3.0
Cs-137	40	Zr-Nb-95	3600
Cs-134	2.6	Ru-103	460
Ce-144	880	Sm-151	0.50
Pm-147	150	Y-91	1200
Ce-141	540	Ru-106	130

Temp.	Ambient
SpG	1.15
Btu/Hr/Gal	125
pH	0

Vol - 100 = 3100 Gal
Flow Batch

(1) Excludes Ce, Pm, and Sm

[redacted]

[redacted]

TABLE 6 (Cont.)

(2) PAW Supernate

	M
H^+	0.95
Fe	< 0.31
Al	0.031
Na	0.44
Cr	0.020
Ni	0.011
Ca	0.0013
Mn	Trace
Mg	Trace
$SiO_3^=$	< 0.011
NO_3	1.25
SO_4	< 0.62
PO_4	< 0.012
F	0.0046

Rh	0.00045
Pd	0.00035
Pu	0.0000024
Np	Trace
U	0.00014
Tc	0.000725
Sr	0.00059
Cs	0.0020
Ce	0.00067
Pm	0.000085
Am	0.00000052
Sb	0.0000056
Zr	0.0031
Nb	0.00011
Ru	0.0014
Sm	0.000094
Y	0.00035
TRE(1)	0.0012

	Ci/Gal
Sr-90	17
Sr-89	150
Cs-137	41
Ce-144	260
Pm-147	44
Ce-141	160

Am-241	0.0015
Sb-125	1.55
Zr-Nb-95	2600
Sm-151	0.15
Y-91	600
Ru-106	97
Cs-134	2.6
Ru-106	360

Temp.	Ambient
SpG	1.15
Btu/Hr/Gal	76
pH	0
Vol.	97
Flow	Batch

(3) Supernate Flush

H_2O	Demineralized
Temp.	Ambient
SpG	1.0
pH	-
Btu/Hr/Gal	0.0
Vol.	5.6
Flow	Batch

93 3072.1509

[redacted]

[redacted]

TABLE 6 (Cont.)

(4) Metathesis Solution, M

Na_2CO_3	1.0
NaOH	0.5
Temp	80 C
Sp.G	1.1
pH	>13
Btu/Hr/Gal	0.0
Vol. (a)	30
(b)	6.5
Flow	Batch

(5) Metathesis Supernate, M

Na_2CO_3	1.0
NaOH	0.5
Fission Product	≤0.5%
SO_4, PO_4, SiO_3	Trace
Temp.	<50 C
Sp.G	1.1
pH	>13
Btu/Hr/Gal	<1.7
Vol.	36.5
Flow	Batch

(6) Cake Wash, M

Na_2CO_3	0.1
Temp.	Ambient
Sp.G	1.0
pH	-
Btu/Hr/Gal	0.0
Vol. (a)	14.5
(b)	6.5
Flow	Batch

(7) Cake Wash Wastes, M

Na_2CO_3	0.1
Fission Products	<0.2%
SO_4, PO_3, SiO_3	Trace
pH	-
Btu/Hr/Gal	<1.2
Vol.	21
Flow	Batch

(8) Cake Dissolution, M

HNO_3	1.5
Temp.	Ambient
Sp.G	1.05
pH	-
Btu/Hr/Gal	0.0
Vol. (a)	5.6
(b)	8
Flow	Batch

(9) Dissolved Cake (Solution), M

H^+	1.3	Sb	0.000038
NO_3	1.5	Zr	0.000375
Pu	0.000026	Nb	0.0000135
U	0.00059	Ru	0.0031
Sr	0.0052	Sm	0.00016
Ce	0.011	Y	0.0024
Pm	0.00145	TRE(1)	0.020
Am	0.0000089		

Trace - Fe, Al, Na, Cr, Ni, Ca, Mn, Mg, Rh, Pd, Tc, Cs

(10) Centrifuge Flush

H_2O Demineralized

Temp.	Ambient
Sp.G	1.0
pH	-
Btu/Hr/Gal	0.0
Vol.	3.2
Flow	Batch

Ci/Gal

Sr-90	140	Temp.	Ambient
Sr-89	1300	Sp.G	1.06
Ce-144	4500	pH	0
Pm-147	750	Btu/Hr/Gal	200
Am-241	0.026	Vol.	13.6
Ce-141	790	Flow	Batch
Sb-125	10		
ZrNb-95	310		
Ru-103	790		
Sm-151	2.5		
Y-91	4100		
Ru-106	220		

[redacted]

9310022.5170

TABLE 6 (Cont.)

(11) Solids Slurry Water

H_2O Demineralized

Temp.	Ambient
Sp.G.	1.0
pH	-
Btu/Hr/Gal	0.0
Vol.	6.5
Flow	Batch

(12) Solids Slurry

H_2O Demineralized

Solids: (%)	
Pu	2
U	2
Sr	1.5
Ce	1
Pm	1
Am	1
Sb	2
Zr	28
Nb	28
Ru	1
Sm	1
Y	1.5
TRE(1)	1

Sulfates, Phosphates, Silicates:

Volume:	0.5 original
Temp.	Ambient
Sp.G.	1.0
pH	-
Btu/Hr/Gal	<120
Vol.	14.5
Flow	Batch

(13) PAW Stored Supernate, M

H^+	0.90	Pu	0.0000023
Fe	<0.29	Np	Trace
Al	0.029	U	0.00013
Na	0.415	Tc	0.00068
Cr	0.0185	Sr	0.00056
Ni	0.011	Cs	0.0019
Ca	0.0013	Ce	0.00063
Mn	Trace	Pm	0.000080
Mg	Trace	Am	0.00000049
$SiO_3^=$	0.011	Sb	0.0000052
NO_3	1.2	Zr	0.00295
SO_4	<0.58	Nb	0.00011
PO_4	<0.012	Ru	0.0013
F	0.0044	Sm	0.0000885
Rh	0.00042	Y	0.00033
Pd	0.00033	TRE(1)	0.0011

Ci/Gal

Sr-90	16	Am-241	0.0014
Sr-89	140	Sb-125	1.5
Cs-137	38	ZrNb-95	2500
Cs-134	2.5	Ru-103	340
Ce-144	250	Sm-151	0.14
Pm-147	42	Y-91	560
Ce-141	150	Ru-106	91

Temp.	Ambient
Sp.G.	1.14
Btu/Hr/Gal	71
pH	0
Vol.	103
Flow	Batch

(14) Dissolved Carbonate Cake, M

H^+	1.1	Sb	0.000031
NO_3	1.26	Zr	0.00030
Pu	0.000021	Nb	0.000011
U	0.00048	Ru	0.0025
Sr	0.0042	Sm	0.00013
Ce	0.0093	Y	0.0019
Pm	0.0012	TRE(1)	0.016
Am	0.0000073		

Trace - Fe, Al, Na, Cr, Ni, Ca, Mn, Mg, Rh, Pd, Tc, Cs

Ci/Gal

Sr-90	120	Sb-125	8.5
Sr-89	1100	ZrNb-95	250
Ce-144	3600	Ru-103	640
Pm-147	610	Sm-151	2.0
Am-241	0.021	Y-91	3300
Ce-141	640	Ru-106	180

Temp.	Ambient
Sp.G.	1.05
pH	0
Btu/Hr/Gal	170
Vol.	16.8
Flow	Batch

[redacted]

TABLE 7

PAW FLOWSHEET - SOLIDS PROCESSING TIME CYCLE

Step	Operation	Vol. (gal)	Rate (gpm)	Time Cycle, (min)
1	Transfer PAW from TK-001-244-AR To TK-11-2. (300 gal line holdup)	3100	100	60
2	Settle solids in TK-11-2	-	-	120
3	Decant PAW supernate thru G-12-2 to TK-9-2 via TK-12-1	3000	15	200
4	Skim G-12-2 and add water to displace heel from G-12-2 and TK-12-1 to TK-9-2	180	10	20
5	Flush solids from G-12-2 to TK-11-2 via TK-11-1 (metathesis solution)	200	5	40
6	Add metathesis solution (1M Na_2CO_3 - 0.5M NaOH) to TK-1102 and digest with agitation for total of one hour at approximately 80 C	930	-	60
7	Cool and settle TK-11-2	-	-	120
8	Decant metathesis supernate from TK-11-2 to TK-9-1 via G-12-2 and TK-12-1	1130	15	75
9	Flush solids from G-12-2 to TK-11-2 via TK-11-1 (cake wash solution)	200	5	40
10	Add cake wash solution (0.1M Na_2CO_3) to TK-11-2 with agitation and agitate for 5 min after completing step 9	450	20	5
11	Allow cake solids to settle	-	-	30
12	Decant cake wash from TK-11-2 to TK-9-1 via G-12-2 and TK-12-1	650	15	45
13	Flush solids from G-12-2 to TK-11-2 via TK-11-1 (cake dissolvent)	250	5	50
14	Add remaining cake dissolvent (1.5M HNO_3) to TK-11-2 and agitate for 40 min.	175	20	60
15	Slurry TK-11-2 to TK-31-2 via G-12-2, TK-12-1	425	15	30
16	Skim G-12-2 and displace heel with H_2O to TK-31-2 via TK-12-1	100	5	20
17	Add 250 gal. water directly to TK-11-1 and flush solids from G-12-2 to TK-11-1	450	5	40
18	Slurry solids from TK-11-1 to TK-25-2	450	75	6
19	Process delay times			120
		Total cycle time		16.2 hr

$$\text{Processing Rate} = \frac{3100 \text{ gal}}{16.2 \text{ hr}} \approx 190 \text{ gph} \approx 4{,}600 \text{ gpd}$$

[redacted]

9313022.1512

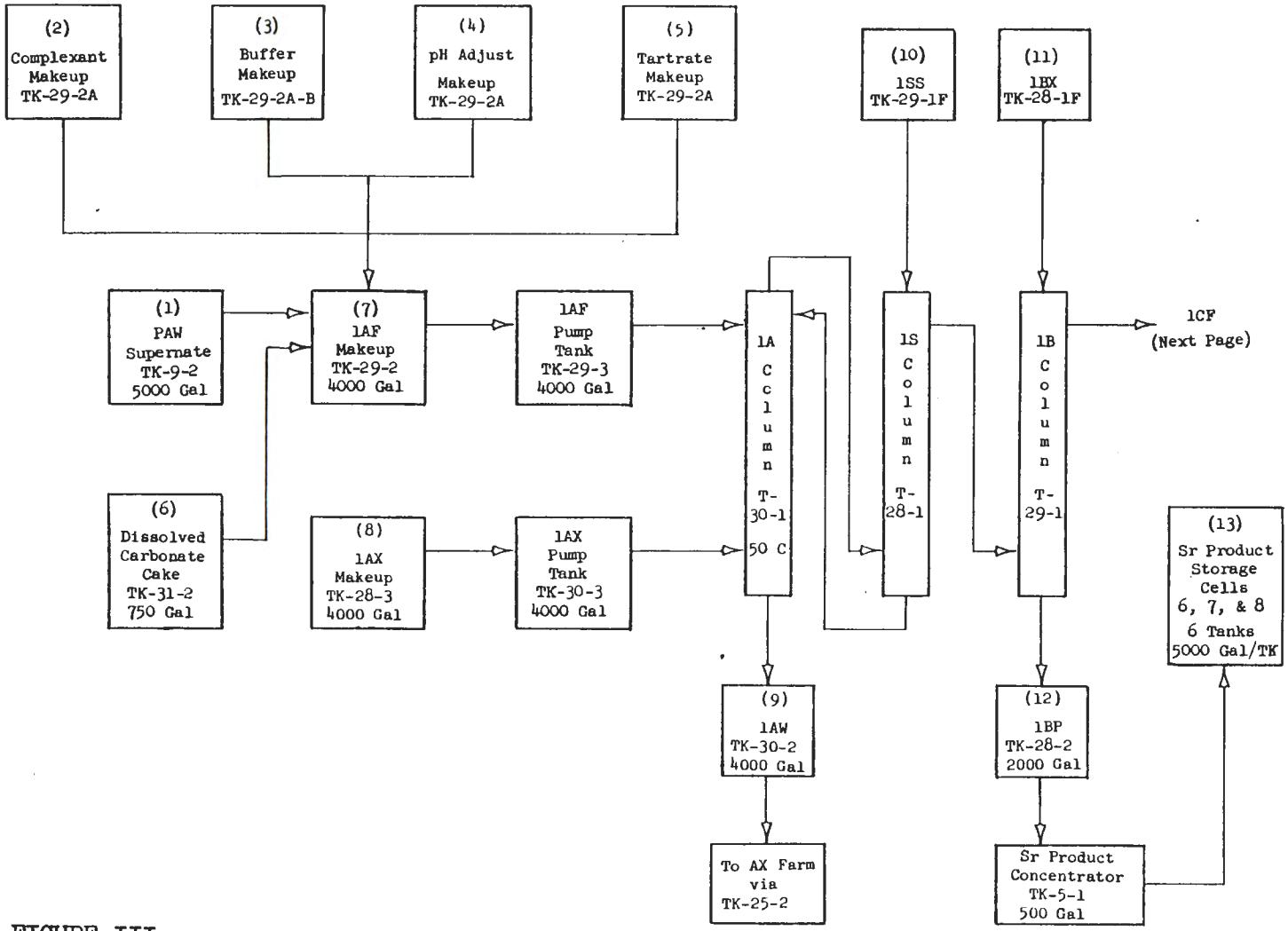

FIGURE III

PAW FLOWSHEET
SOLVENT EXTRACTION

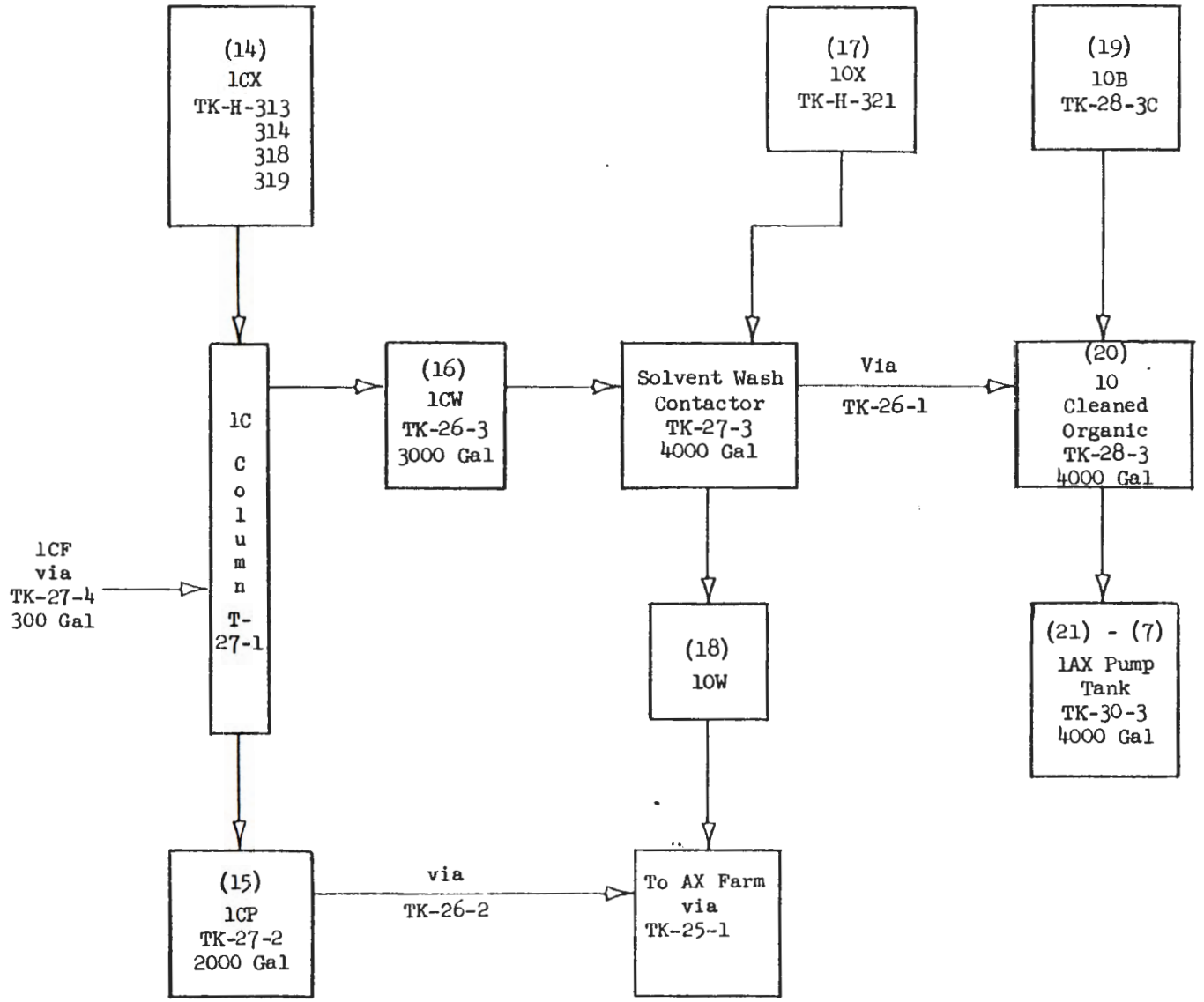

FIGURE III (Cont.)

[redacted]

TABLE 8

PAW FLOWSHEET
SOLVENT EXTRACTION

(1) PAW Supernate

	M		
H^+	0.90	Rh	0.00042
Fe	<0.29	Pd	0.00033
Al	0.029	Pu	0.0000023
Na	0.415	Np	Trace
Cr	0.0185	U	0.00013
Ni	0.011	Tc	0.00068
Ca	0.0013	Sr	0.00056
Mn	Trace	Cs	0.0019
Mg	Trace	Ce	0.00063
$SiO_3^=$	<0.011	Pm	0.000080
NO_3	1.2	Am	0.00000049
SO_4	<0.58	Sb	0.0000052
PO_4	<0.012	Zr	0.00295
F	0.0044	Nb	0.00011
		Ru	0.0013
		Sm	0.0000885
		Y	0.00033
		TRE(1)	0.0011

	Ci/Gal		
Sr-90	16	Am-241	0.0014
Sr-89	140	Sb-125	1.5
Cs-137	38	Zr-Nb-95	2500
Cs-134	2.5	Ru-103	340
Ce-144	250	Sm-125	0.14
Pm-147	42	Y-91	560
Ce-141	150	Ru-106	91

Temp.	Ambient
SpG	1.14
Btu/Hr/Gal	71
pH	0
Vol.	100 = 1600
Flow	Batch

(2) Complexant Makeup

	M
Na_3NTA	1.8
Temp.	Ambient
SpG	1.32
pH	12.1
Btu/Hr/Gal	0.0
Vol.	22
Flow	Batch/1AF Batch

(1) Excludes Ce, Pm, Sm

[redacted]

TABLE 8 (Cont.)

(3) Buffer Makeup

	M
HAcOH	11.5
Temp.	Ambient
SpG	1.26
pH	-
Btu/Hr/Gal	0.0
Vol.	2.67
Flow	Batch/1AF Batch

(4) pH Adjust Makeup

	M
NaOH	19
Temp.	Ambient
SpG	1.53
pH	-
Btu/Hr/Gal	0.0
Vol.	4.20
Flow	Batch/1AF Batch

(5) Tartrate Makeup

Tartaric Acid	Solid
Weight - Lb	95
Flow	Batch/1AF Batch

(6) Dissolved Carbonate Cake

	M
H^+	1.1
NO_3	1.26
Pu	0.000021
U	0.00048
Sr	0.0042
Ce	0.0093
Pm	0.0012
Am	0.0000073
Sb	0.000031
Zr	0.00030
Nb	0.000011
Ru	0.0025
Sm	0.00013
Y	0.0019
TRE(1)	0.016

Trace - Fe, Al, Na, Cr, Ni, Ca, Mn, Mg, Rh, Pd, Tc, Cs

	Ci/Gal
Sr-90	120
Sr-89	1100
Ce-144	3600
Pm-147	610
Am-241	0.021
Ce-144	640
Sb-125	8.5
ZrNb	250
Ru-103	640
Sm-151	2.0
Y-91	3300
Ru-106	180

Temp.	Ambient
SpG	1.05
Btu/Hr/Gal	170
Vol.	16.3
Flow	Batch

TABLE 8 (Cont.)

(7) 1AF Makeup

M			
H^+	0.000050	Rh	0.00027
Fe	0.19	Pd	0.00021
Al	0.019	Pu	0.0000036
Na	1.6	Np	Trace
Cr	0.012	U	0.00013
Ni	0.0068	Tc	0.00044
Ca	0.00080	Sr	0.00080
Mn	Trace	Cs	0.0012
Mg	Trace	Ce	0.0014
SiO_2	< 0.0068	Pm	0.000175
NO_3	0.8-1.6	Am	0.0000011
SO_4	< 0.37	Sb	0.0000066
PO_4	< 0.0075	Zr	0.0020
F	0.0022	Nb	0.000072
Tartrate	0.025	Ru	0.0011
NTA	0.26	Sm	0.00019
AcOH	0.20	Y	0.00041
		TRE(1)	0.0024

Ci/Gal			
Sr-90	22	Am-241	0.0031
Sr-89	200	Sb-125	1.8
Cs-137	25	Zr-Nb-95	700
Cs-134	1.6	Ru-103	280
Ce-144	540	Sm-151	0.31
Pm-147	91	Y-91	710
Ce-141	330	Ru-106	77

Temp.	50°C for column entry
SpG	1.2
pH	4.3
Btu/Hr/Gal	66
Vol.	145
Flow	100 = 300 GPH

(8) 1AX Makeup

M	
TBP	0.2
HD2EHP	0.19
NaD2EHP	0.11
NPH	Diluent

Temp.	50°C for column entry
SpG	0.79
pH	-
Btu/Hr/Gal	0.0
Vol.	-
Flow	100

[redacted]

TABLE 8 (Cont.)

(9) 1AW

M			
H^+	0.000033	Rh	0.000225
Fe	0.155	Pd	0.000175
Al	0.015	Pu	0.0000030
Na	1.3	Np	Trace
Cr	0.0099	U	Negligible
Ni	0.0056	Tc	0.00037
Ca	Negligible	Sr	0.0000033
Mn	Negligible	Cs	0.0010
Mg	Negligible	Ce	0.000011
SiO_2	< 0.0057	Pm	0.000015
NO_3	0.6 - 1.3	Am	3.6×10^{-8}
SO_4	< 0.31	Sb	0.0000055
PO_4	< 0.00625	Zr	0.00165
F	0.0023	Nb	0.000060
Tartrate	0.021	Ru	0.000925
NTA	0.22	Sm	0.0000016
AcOH	0.29	Y	Negligible
		TRE(1)	0.000020

Ci/Gal			
Sr-90	0.01	Am-241	0.0001
Sr-89	0.84	Sb-125	1.5
Cs-137	21	ZrNb-95	1400
Cs-134	1.3	Ru-103	240
Ce-144	4.5	Sm-151	0.0026
Pm-147	0.75	Y-91	Negligible
Ce-141	2.7	Ru-106	64

Temp.	~ 50°C
SpG	1.15
pH	4.2
Btu/Hr/Gal	40
Vol.	-
Flow	120

(10) 1SS

M	
HAcOH	0.75
Na_3NTA	0.01
NaOH	0.036
Temp.	Ambient
SpG	1.05
pH	2.4
Btu/Hr/Gal	0.0
Vol.	-
Flow	20

(11) 1BX

M	
HNO_3	0.04
Temp.	Ambient
SpG	1.0
pH	1.4
Btu/Hr/Gal	0.0
Vol.	-
Flow	20

[redacted]

TABLE 8 (Cont.)

(12) 1BP

	M
H^+	0.018
Al	0.00094
Na	0.0075
Cr	0.0030
Ni	0.00017
Ca	0.00091
Mn	Trace
Mg	Trace
NO_3	0.04
Sr	0.0039
Rare Earths	0.3%

	Ci/Gal
Sr-89	980
Sr-90	110
Temp.	Ambient
SpG	1.0
pH	1.75
Btu/Hr/Gal	14.0
Vol.	-
Flow	20

(13) Concentrated Sr Product

	M
H^+	0.32
Al	0.017
Na	0.13
Cr	0.0054
Ni	0.0030
Ca	0.016
Mn	Trace
Mg	Trace
NO_3	0.71
Sr	0.070
Rare Earths	0.3%

	Ci/Gal
Sr-89	18,000
Sr-90	1,950
Temp.	Ambient
SpG	1.06
pH	0.5
Btu/Hr/Gal	250
Vol.- Gal/St.Tk.	4000
Flow	1.12

Conc. Factor: 18

(14) 1CX

	M
HNO_3	2.5
Temp.	Ambient
SpG	1.06
pH	-
Btu/Hr/Gal	0.0
Vol.	-
Flow	20

(15) 1CP

	M		Ci/Gal
H^+	1.95	Sr-89	15
Fe	0.0047	Sr-90	1.7
Al	0.0019	Ce-144	2700
Cr	0.00036	Ce-141	730
Ni	0.00017	Pm-147	450
Ca	0.0028	Am-241	0.15
Mn	Trace	Sm-151	1.5
Mg	Trace	Y-91	35
NO_3	2.0	Temp.	Ambient
Sr	0.000060	SpG	1.1
Ce	0.00675	pH	-
Pm	0.00086	Btu/Hr/Gal	75
Am	0.0000051	Vol.	-
Sm	0.00095	Flow	20
Y	0.0000205		
TRE(1)	0.012		
Np	Trace		

9313022.15

TABLE 8 (Cont.)

(16) 1CW

	M
TBP	0.2
HD2EHP	0.3
NPH	Diluent
HNO_3	0.092
Np	Trace
U	0.00013
Y	0.00041
Rare Earths + Am	~ 0.5%

	Ci/Gal
Y-91	700
Ce-144	2.7
Pm-147	0.45

Trace - Am, Sm, Fe, Al

Temp.	Ambient
SpG	0.79
pH	-
Btu/Hr/Gal	8.7
Vol. - Gal	100

Flow - Accumulate in 2000-gal batches for organic wash

(17) 1OX

	M
NaOH	1.4
Na_2 Tartrate	0.1
Temp.	Ambient
SpG	1.1
pH	-
Btu/Hr/Gal	0.0
Vol. - Gal	1000

Flow 50, Batch/1CO Batch

(21) 1AX

[See (7)]

(18) 1OW

	M
Na	0.98
OH	0.6
NO_3	0.18
Np	Trace
Y	0.00082
U	0.00026
Tartrate	0.1
Rare Earths + Am	~0.5%

	Ci/Gal
Y-91	1400
Ce-144	5.4
Pm-127	0.9

Trace - Am, Sm, Fe, Al, ZrNb, Ru

Temp.	Ambient
SpG	1.0
pH	-
Btu/Hr/Gal	17
Vol. - Gal	1000

Flow 50, Batch/1CO Batch

(19) 1OB

	M
HNO_3	12.2
Temp.	Ambient
SpG	1.35
pH	-
Btu/Hr/Gal	0.0
Vol. - Gal	31.15

Flow 1.56 Batches/1CO Batch

(20) 1O Cleaned Organic

	M
TBP	0.2
NaD2EHP	0.3
NPH	Diluent

Trace - Y, ZrNb, Ru, RE

Temp.	Ambient
SpG	0.79
pH	-
Btu/Hr/Gal	Negligible
Vol. - Gal	2000

Flow 100, Batch/1CO Batch

TABLE 9

ZIRFLEX ACID WASTE COMPOSITION (ZAW)

	M		
H^+	1.0	Rh	0.00075
Na	0.35	Pd	0.00053
Fe	0.30	Pu	0.0000033
Cr	0.016	Np	0.000014
Al	0.90	U	0.0040
Ni	0.0078	Tc	0.0012
Zr	0.10	Sr	0.0023
Ca	0.0015	Cs	0.0038
Mn	Trace	Ce	0.0038
Mg	Trace	Pm	0.00042
SO_4	0.52	Am	0.0000027
NO_3	3.85	Sb	0.000020
F	0.30	Zr	0.0078
PO_4	0.01	Nb	0.000165
		Ru	0.0031
		Sm	0.00056
		Y	0.0012
		TRE(1)	0.0073

Solids: Denitrated 1WW = 1 - 8% by volume
1WW: 1 - 3% by volume
Composition: 1) $Zr_3(PO_4)_4 \cdot x\ H_2O$
2) Metal sulfates

	Ci/Gal		
Sr-90	64	Sb-125	5.85
Sr-89	670	Zr-Nb-95	3600
Cs-137	69	Ru-106	150
Cs-134	10	Sm-151	0.78
Ce-144	1300	Y-91	1000
Pm-147	210		

Temp.	Ambient
SpG	1.2
But/Hr/Gal	135
pH	0
Volume	75-100 Gal/Ton (Use 100)
Flow	13.3 T.U./Day
	1300 Gallons/Day

Exposure History
2100 MWD/T
10.6 Mw/T
E 2.1
120 Dy Cooling

(1) Excludes Ce, Pm, and Sm

9313022.1527

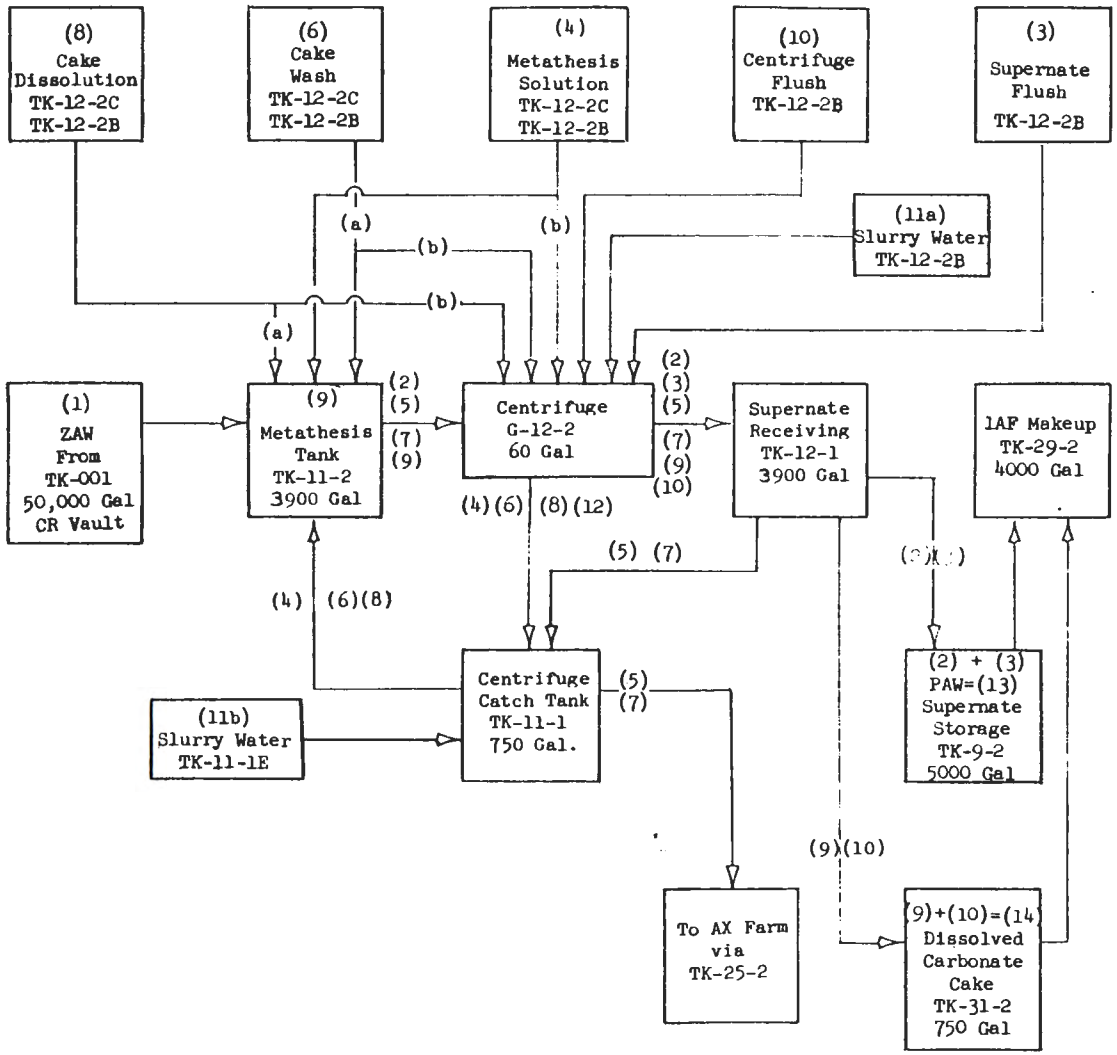

FIGURE IV

ZAW FLOWSHEET
SOLIDS TREATMENT

TABLE 10

ZAW FLOWSHEET
SOLIDS TREATMENT

(1) ZAW

	M		
H^+	1.0	Rh	0.00075
Na	0.35	Pd	0.00053
Fe	0.30	Pu	0.0000033
Cr	0.016	Np	0.000014
Al	0.90	U	0.0040
Ni	0.0078	Tc	0.0012
Zr	0.10	Sr	0.0023
Ca	0.0015	Cs	0.0038
Mn	Trace	Ce	0.0038
Mg	Trace	Pm	0.00042
SO_4	0.52	Am	0.0000027
NO_3	3.85	Sb	0.000020
F	0.30	Zr	0.0078
PO_4	0.01	Nb	0.000165
Solids		Ru	0.00310
1-8% Vol		Sm	0.00056
Use 2%		Y	0.0012
		TRE(1)	0.00723

	Ci/Gal		
Sr-90	64	Sb-125	5.85
Sr-89	670	Zr-Nb-95	3600
Cs-137	69	Ru-106	150
Cs-134	10	Sm-151	0.78
Ce-144	1300	Y-91	1000
Pm-147	210		

Temp. Ambient
SpG 1.2
Btu/Hr/Gal 135
pH 0
Vol - 100 = 2650 Gal
Flow - Batch

(2) ZAW Supernate

	M		
H^+	1.0	Rh	0.00077
Na	0.36	Pd	0.00054
Fe	<0.31	Pu	0.0000013
Cr	0.016	Np	0.0000072
Al	0.92	U	0.0025
Ni	0.0079	Tc	0.00125
Zr	0.10	Sr	0.0010
Ca	0.0015	Cs	0.0039
Mn	Trace	Ce	0.0011
Mg	Trace	Pm	0.00012
SO_4	<0.53	Am	0.00000081
NO_3	3.9	Sb	0.000010

(1) Excluded Ce, Pm, and Sm

9313022.1529

TABLE 10 (Cont.)

(2) ZAW Supernate - Cont.

F	0.30	Ru	0.0023
PO_4	<0.01	Sm	0.000165
Zr	0.0056	Y	0.00060
Nb	0.00012	TRE(1)	0.00215
Solids	0%		

Ci/Gal

Sr-90	29	Sm-151	0.23
Sr-89	300	Y-91	520
Cs-137	70	Temp.	Ambient
Cs-134	10	SpG	1.2
Cs-144	390	Btu/Hr/Gal	80
Pm-147	63	pH	0
Sb-125	3.0	Vol.	98
ZrNb-95	2600	Flow	Batch
Ru-106	110		

(3) Supernate Flush

H_2O	Demineralized
Temp.	Ambient
SpG	1.0
pH	-
Btu/Hr/Gal	0.0
Vol.	5.8
Flow	Batch

(4) Metathesis Solution

		M
Na_2CO_3		1.0
NaOH		0.5
Temp.		80 C
SpG		1.1
pH		>13
Btu/Hr/Gal		0.0
Vol.	(a)	30
	(b)	6.5
Flow		Batch

(5) Metathesis Supernate

	M
Na_2CO_3	1.0
NaOH	0.5
Fiss.Prod.	<0.5%
Trace	SO_4, PO_4
SpG	1.1
pH	>13
Btu/Hr/Gal	1.8
Vol.	36.5
Flow	Batch
Temp.	50 C

(6) Cake Wash

		M
Na_2CO_3		0.1
Temp.		Ambient
SpG		1.0
pH		-
Btu/Hr/Gal		0.0
Vol.	(a)	14.5
	(b)	6.5
Flow		Batch

(7) Cake Wash Wastes

	M
Na_2CO_3	0.1
Fiss.Prod.	<0.2%
Trace	SO_4, PO_4
Temp.	Ambient
SpG	1.0
Btu/Hr/Gal	<1.2
Vol.	21
Flow	Batch

(8) Cake Dissolution

		M
HNO_3		1.5
Temp.		Ambient
SpG		1.05
pH		-
Btu/Hr/Gal		0.0
Vol.	(a)	5.4
	(b)	8
Flow		Batch

93H3022.1574

TABLE 10 (Cont.)

(9) Dissolved Cake (Solution)

	M
H^+	1.25
NO_3	1.5
Np	0.000045
Pu	0.000014
U	0.011
Sr	0.0092
Ce	0.020
Pm	0.0022
Am	0.000014
Sb	0.000071
Zr	0.00076
Nb	0.000016
Ru	0.0054
Sm	0.0029
Y	0.0042
TRE(1)	0.00375

Trace - Fe, Al, Na, Cr, Ni, Ca, Mn, Mg, Rh, Pd, Tc, Cs

	Ci/Gal
Sr-90	260
Sr-89	2700
Ce-144	6800
Pm-147	1100
Sb-125	20
ZrNb-95	3500
Ru-106	260
Sm-151	4.0
Y-91	3650

Temp.	Ambient
SpG	1.06
pH	-
Btu/Hr/Gal	280
Vol.	13.4
Flow	Batch

(10) Centrifuge Flush

H_2O	Demineralized
Temp.	Ambient
SpG	1.0
pH	-
Btu/Hr/Gal	0.0
Vol.	3.2
Flow	Batch

(11) Solids Slurry Water

H_2O	Demineralized
Temp.	Ambient
SpG	1.0
pH	-
Btu/Hr/Gal	0.0
Vol.	6.5
Flow	Batch

(12) Solids Slurry

H_2O Demineralized

Solids: %

Pu	2	Zr	28
U	2	Nb	28
Sr	1.5	Ru	1
Ce	1	Sm	1
Pm	1	Y	1.5
Am	1	TRE(1)	1
Sb	2		

Sulfates
Phosphates

Vol: 0.5 Original

Temp.	Ambient
SpG	1.0
pH	-
Btu/Hr/Gal	260
Vol.	6.5
Flow	Batch

9313022.1575

TABLE 10 (Cont.)

(13) ZAW Stored Supernate

	M
H^+	0.94
Na	0.34
Fe	<0.29
Cr	0.015
Al	0.87
Ni	0.00745
Zr	0.094
Ca	0.0014
Mn	Trace
Mg	Trace
SO_4	<0.50
NO_3	3.7
F	0.29
PO_4	<0.0094
Solids	0
Rh	0.00072
Pd	0.000505
Pu	0.0000012
Np	0.0000068
U	0.00235
Tc	0.0012
Sr	0.00096
Cs	0.0037
Ce	0.00105
Pm	0.00012
Am	0.00000081
Sb	0.0000096
Zr	0.00525
Nb	0.00011
Ru	0.0022
Sm	0.000155
Y	0.00056
TRE(1)	0.0020

	Ci/Gal
Sr-90	27
Sr-89	280
Cs-137	66
Cs-134	9.8
Ce-144	365
Pm-147	60
Sb-125	2.8
ZrNb-95	2400
Ru-106	110
Sm-151	0.22
Y-91	490

Temp.	Ambient
SpG	1.2
Btu/Hr/Gal	77
pH	0
Vol.	103
Flow	Batch

(14) Dissolved Carbonate Cake

	M
H^+	1.0
NO_3	1.2
Np	0.000036
Pu	0.000012
U	0.0088
Sr	0.0074
Ce	0.016
Pm	0.00175
Am	0.000011
Sb	0.000057
Zr	0.00061
Nb	0.000013
Ru	0.0043
Sm	0.0023
Y	0.0034
TRE(1)	0.030

Trace - Fe, Al, Na, Cr, Ni, Ca, Mn, Mg, Rh, Pd, Tc, Cs

	Ci/Gal
Sr-90	210
Sr-89	2200
Ce-144	5400
Pm-147	890
Sb-125	19
ZrNb-95	2800
Ru-106	210
Sm-151	3.2
Y-91	2900

Temp.	Ambient
SpG	1.06
pH	-
Btu/Hr/Gal	220
Vol.	16.6
Flow	Batch

9310022.1526

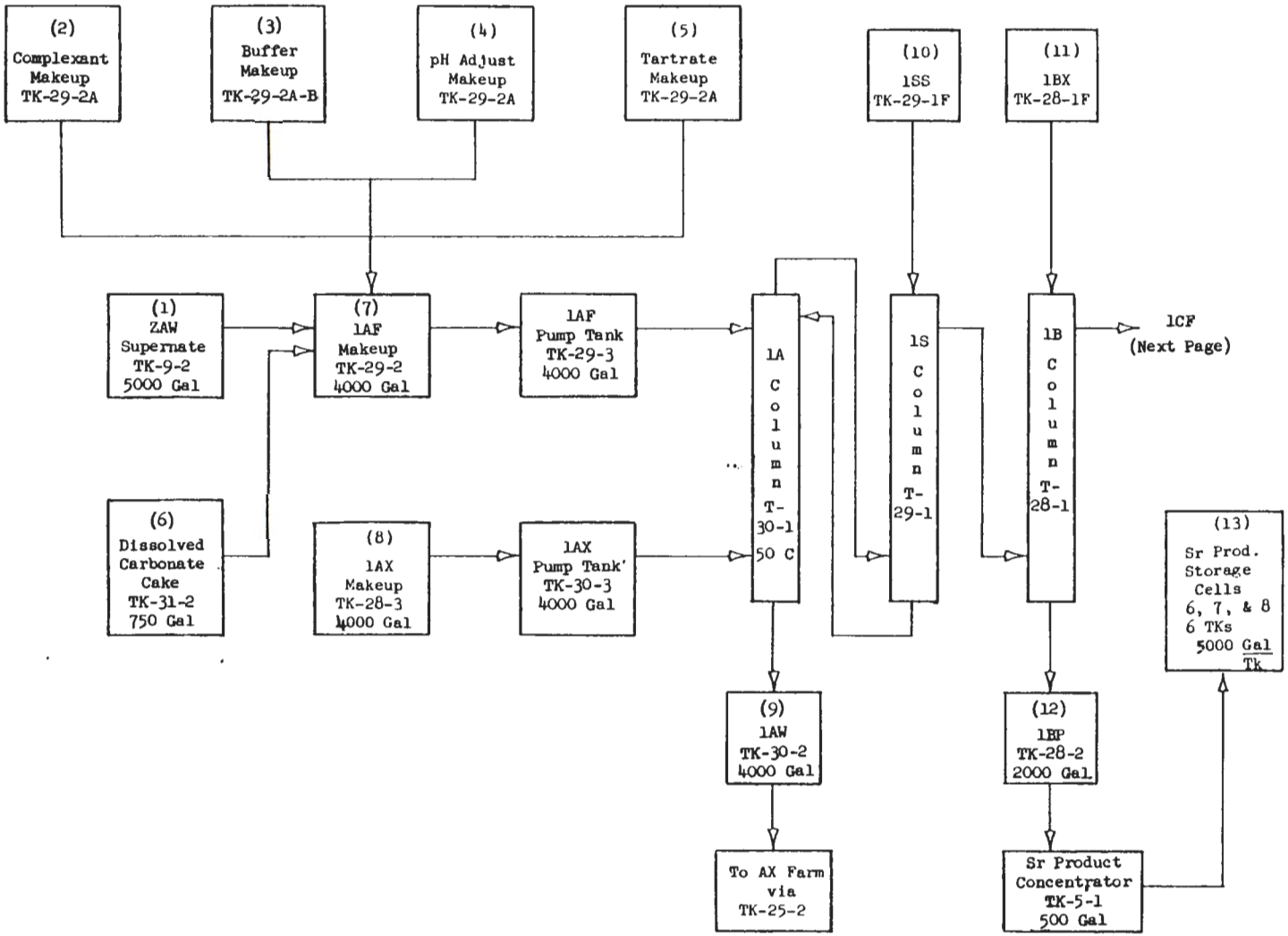

FIGURE V
ZAW FLOWSHEET
SOLVENT EXTRACTION

9313022.1527

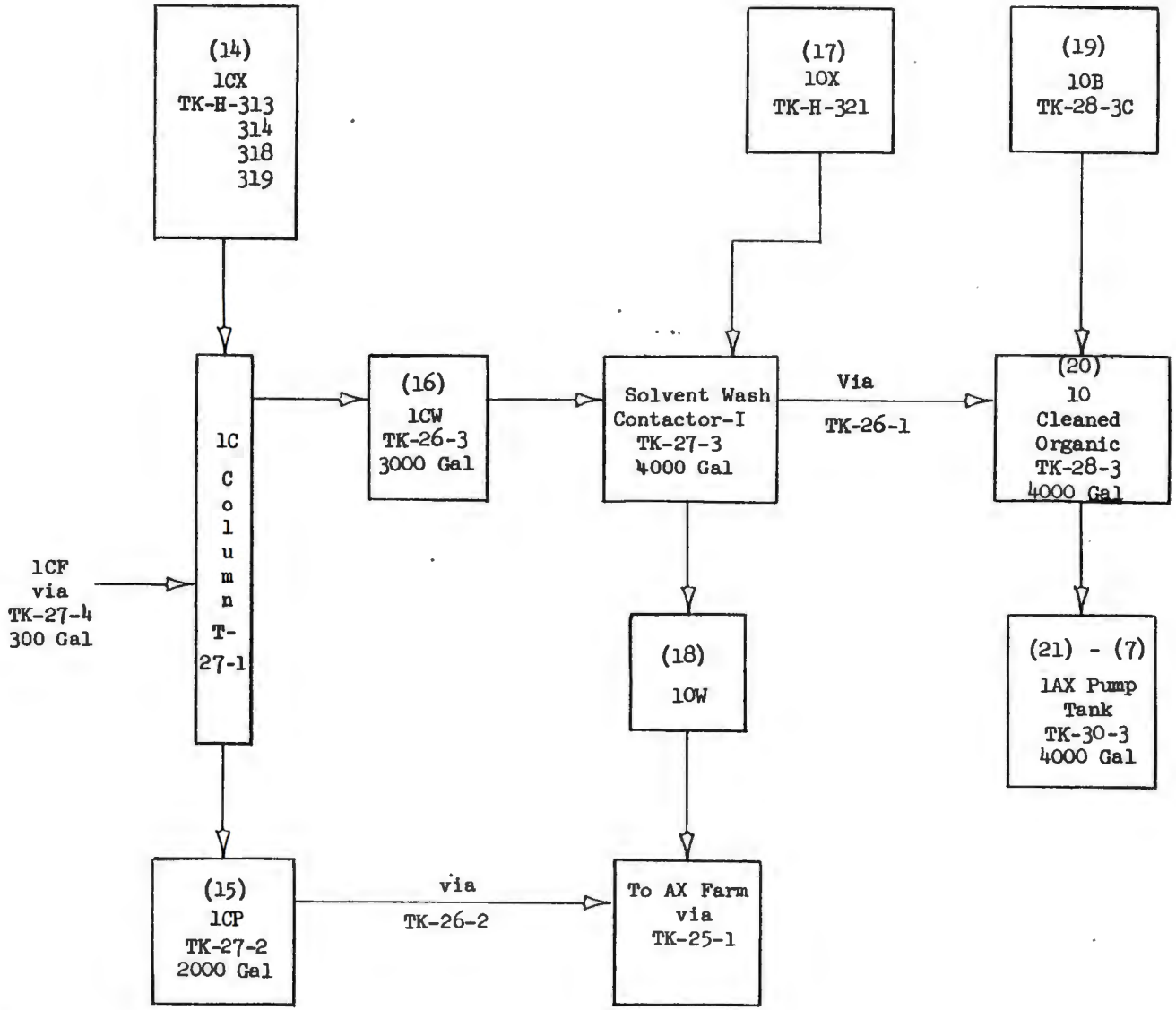

FIGURE V (Cont.)

TABLE 11

ZAW FLOWSHEET
SOLVENT EXTRACTION

(1) ZAW Stored Supernate

	M		
H^+	0.94	Rh	0.00072
Na	0.34	Pd	0.000505
Fe	<0.29	Pu	0.0000012
Cr	0.015	Np	0.0000068
Al	0.87	U	0.00235
Ni	0.00745	Tc	0.0012
Zr	0.094	Sr	0.00096
Ca	0.0014	Cs	0.0037
Mn	Trace	Ce	0.00105
Mg	Trace	Pm	0.00012
SO_4	<0.50	Am	0.00000081
NO_3	3.7	Sb	0.0000096
F	0.29	Zr	0.00525
PO_4	<0.0094	Nb	0.00011
Solids	0	Ru	0.0022
		Sm	0.000155
		Y	0.00056
		TRE(1)	0.0020

	Ci/Gal		
Sr-90	27	Sb-125	2.8
Sr-89	280	Zr-Nb-95	2400
Cs-137	66	Ru-106	110
Cs-134	9.8	Sm-151	0.22
Ce-144	365	Y-91	490
Pm-147	60		

Temp.	Ambient
SpG	1.2
Btu/Hr/Gal	77
pH	0
Vol.	100 = 1360
Flow	Batch/LAF Batch

(2) Complexant Makeup

	M
Na_3HEDTA	1.57

Temp.	Ambient
SpG	1.28
pH	0
Btu/Hr/Gal	0.0
Vol.	94
Flow	Batch/LAF Batch

(1) Excludes Ce, Pm, and Sm

9313022.1579

[redacted]

TABLE 11 (Cont.)

(3) Buffer Makeup

	M
HAcOH	11.5
Temp.	Ambient
SpG	1.25
pH	-
Btu/Hr/Gal	0.0
Vol.	4.0
Flow	Batch/1AF Batch

(4) pH Adjust Makeup

	M
HNO_3	12.2
Temp.	Ambient
SpG	1.35
pH	-
Btu/Hr/Gal	0.0
Vol.	13.8
Flow	Batch/1AF Batch

(5) Tartrate Makeup

Tartaric Acid	Solid
Weight - Lb	100
Flow	Batch/1AF Batch

(6) Dissolved Carbonate Cake

	M
H^+	1.0
NO_3	1.2
Np	0.000036
Pu	0.000012
U	0.0088
Sr	0.0074
Ce	0.016
Pm	0.00175
Am	0.000011
Sb	0.00057
Zr	0.00061
Nb	0.000013
Ru	0.0043
Sm	0.0023
Y	0.0034
TRE(1)	0.030

	Ci/Gal
Sr-90	210
Sr-89	2200
Ce-144	5400
Pm-147	890
Sb-125	17
ZrNb-95	2,800
Ru-106	210
Sm-151	3.2
Y-91	2,900
Temp.	Ambient
SpG	1.06
pH	-
Btu/Hr/Gal	220
Vol.	16
Flow	Batch

Trace - Fe, Al, Na, Cr, Ni, Ca
Mn, Mg, Rh, Pd, Tc, Cs

[redacted]

[redacted]

TABLE 11 (Cont.)

(7) 1AF Makeup

	M				Ci/Gal
H^+	0.0001	Rh	0.00031	Sr-90	26
Na	2.0	Pd	0.00022	Sr-89	270
Fe	0.12	Pu	0.0000013	Cs-137	28
Cr	0.0066	Np	0.0000057	Cs-134	4.2
Al	0.37	U	0.0016	Ce-144	530
Ni	0.0032	Tc	0.00051	Pm-147	86.5
Zr	0.041	Sr	0.00092	Sb-125	2.35
Ca	0.00062	Cs	0.0016	ZrNb-95	1060
Mn	Trace	Ce	0.0015	Ru-106	60
Mg	Trace	Pm	0.00017	Sm-151	0.32
SO_4	0.21	Am	0.00000111	Y-91	410
NO_3	4.3 - 3.8	Sb	0.0000080		
F	0.12	Zr	0.0023	Temp.	50 C for column entry
PO_4	0.0041	Nb	0.000059	SpG	1.2
HEDTA	0.63	Ru	0.0012	pH	4.0
AcOH	0.20	Sm	0.00023	Btu/Hr/Gal	49
Tartrate	0.025	Y	0.00047	Vol.	228
		TRE(1)	0.0029	Flow	100 - 380 gph

(8) 1AX Makeup

	M
TBP	0.2
HD2EHP	0.18
NaD2EHP	0.12
NPH	Diluent
Temp.	50 C for column entry
SpG	0.79
pH	-
Btu/Hr/Gal	0.0
Vol.	-
Flow	100

(9) 1AW

	M		
H^+	0.00012	Rh	0.00026
Na	1.7	Pd	0.00018
Fe	<0.10	Pu	0.00000095
Cr	0.00545	Np	0.0000014
Al	0.305	U	Negligible
Ni	0.0027	Tc	0.00042
Zr	0.034	Sr	0.000015
Ca	Negligible	Cs	0.0013
Mn	Trace	Ce	0.00013
Mg	Trace	Pm	0.000021
SO_4	<1.8	Am	3.6×10^{-8}
NO_3	4.0 - 3.1	Sb	0.0000067
F	0.10	Zr	0.0019
PO_4	<0.003	Nb	0.000049
HEDTA	0.52	Ru	0.0010
AcOH	0.25	Sm	0.000019
Tartrate	0.021	Y	Negligible
		TRE(1)	0.000254

	Ci/Gal		
Sr-90	0.43	Sm-151	0.026
Sr-89	4.5	Y-91	Negligible
Cs-137	24	Temp.	~50 C
Cs-134	3.5	SpG	1.15
Ce-144	44	pH	3.9
Pm-147	11	Btu/Hr/Gal	24
Sb-125	2.0	Vol.	-
ZrNb-95	880	Flow	120
Ru-106	50		

(10) 1SS

	M
HAcOH	0.5
Na_3HEDTA	0.005
NaOH	0.012
Temp.	Ambient
SpG	1.03
pH	2.4
Btu/Hr/Gal	0.0
Vol.	-
Flow	20

[redacted]

TABLE 11 (Cont.)

(11) 1BX

	M
HNO_3	0.035
Temp.	Ambient
SpG	1.0
pH	1.45
Btu/Hr/Gal	0.0
Vol.	0
Flow	20

(12) 1BP

	M
H^+	0.016
Na	0.0075
Ca	0.00093
Np	0.0000057
Sr	0.00445
Zr	0.00021
NO_3	0.04
Rare Earths	<0.2%

	Ci/Gal
Sr-90	125
Sr-89	1300
Rare Earths	<6.3
ZrNb-95	5.2
Temp.	Ambient
SpG	1.0
pH	1.8
Btu/Hr/Gal	18
Vol.	-
Flow	20

(13) Concentrated Sr Product

	M
H^+	0.22
Na	0.104
Ca	0.013
Np	0.000079
Sr	0.0618
Zr	0.0029
NO_3	0.56
Rare Earths	<0.2%

	Ci/Gal
Sr-90	1700
Sr-89	18,000
Rare Earths	<87
ZrNb-95	72
Temp.	Ambient
SpG	1.06
pH	0.66
Btu/Hr/Gal	250
Vol.	-
Flow	1.44
Conc. Ftr. =	14

(14) 1CX

	M
HNO_3	2.5
Temp.	Ambient
SpG	1.06
pH	-
Btu/Hr/Gal	0.0
Vol.	-
Flow	20

(15) 1CP

	M		M
H^+	1.93	Np	0.0000071
Fe	0.00062	Sr	0.000046
Cr	0.000064	Ce	0.0069
Al	0.013	Pm	0.00072
Ni	0.000032	Am	0.0000053
Zr	0.0020	Zr	0.00011
Ca	0.0022	Nb	0.0000024
Mn	Trace	Sm	0.0010
Mg	Trace	TRE(1)	0.013
NO_3	2.04	Y	0.00012

	Ci/Gal		
Sr-90	1.29	Temp.	Ambient
Sr-89	13.4	SpG	1.07
Ce-144	2400	pH	0
Pm-147	370	Btu/Hr/Gal	68.5
ZrNb-95	53	Vol.	-
Sm-125	1.4	Flow	20
Y-91	100		

9313022.1532

TABLE 11 (Cont.)

(16) 1CW

	M
TBP	0.2
HD2EHP	0.3
NPH	Diluent
HNO_3	0.092
Np	0.0000014
U	0.0016
Y	0.000447
Rare Earths + Am	0.5%

Trace - Fe, Al

	Ci/Gal
Y-91	390
Ce-144	2.6
Pm-147	0.43

Temp.	Ambient
SpG	0.79
pH	-
Btu/Hr/Gal	4.8
Flow	100

Vol. - Accumulate in 2000-gal batches for organic wash

(17) 10X

	M
NaOH	1.4
Na_2Tartrate	0.1

Temp.	Ambient
SpG	1.1
pH	-
Btu/Hr/Gal	0.0
Vol. - Gal	1000
Flow	50, Batch/1CO Batch

(21) 1AX

[See (7)]

(18) 10W

	M
Na	0.98
OH	0.6
NO_3	0.18
Np	0.0000028
U	0.0032
Y	0.00089
Tartrate	0.1
Rare Earths + Am	0.5%

	Ci/Gal
Y-91	780
Ce-144	5.2
Pm-147	0.86

Trace - Fe, Al

Temp.	Ambient
SpG	1.0
pH	-
Btu/Hr/Gal	9.7
Vol. - Gal	1000
Flow	50, Batch/1CO Batch

(19) 10B

	M
HNO_3	12.2

Temp.	Ambient
SpG	1.35
pH	-
Btu/Hr/Gal	0.0
Vol. - Gal	29.4
Flow	1.47, Batch/1CO Batch

(20) 10 Cleaned Organic

	M
TBP	0.2
NaD2EHP	0.3
NPH	Diluent

Trace - Y, ZrNb, Ru, RE

Temp.	Ambient
SpG	0.79
pH	-
Btu/Hr/Gal	Negligible
Vol. - Gal	2000
Flow	100, Batch/1CO Batch

TABLE 12

PUREX SLUDGE COMPOSITION

M		M x 10^3	
Na	32.5	Pu	0.16
Fe	1.3	Np	0.066
Cr	0.07	UO_4	65.5
Ni	0.0475	Sr	6.1
Ca	0.11	Cs	0.49
Mg	Trace	Ce	6.6
Mn	0.035	Pm	0.13
AlO_2	2.1	Am	0.0069
SiO_2	0.082	Sb	0.0093
NO_3	2.7	Zr	18
NO_2	5.3	Ru	6.3
SO_4	2.7	Sm	2.2
PO_4	0.39	Y	2.4
CO_3	8.1	TRE(4)	18.
OH	4.3		

Trace: Rh, Pd, Tc, Nb

Ci/Gal			
Sr-90	120	Sb-125	0.66
Cs-137	9.85	Ru-106	2.3
Cs-134	0.06	Sm-151	1.8
Ce-144	3.8		
Pm-147	69		

Temp.	Ambient
SpG	1.15 - 2.0
Btu/Hr/Gal	3.1
pH	10-11
Vol.	102,000 Gal/8,000 TU = 12.7 Gal/TU
Flow	Two-three tanks per year

Notes:

1. Sludge composition based on analysis of sludge in TK-103-A, HW-77380.

2. Assume: a) 8 hr. F.P. age
   b) 8,000 TU/tank
   c) Sr-90/Total Sr - 40%

3. Since the anion composition is not well defined, it is assumed that all metals in the sludge exist as hydroxide. Al, U, Rh, Pd, Tc are in anions. Silicaon is in the form of SiO_2. The anions in the sludge exist in about the ratios as reported in HW-77380.

4. Excludes Pm, Ce, and Sm.

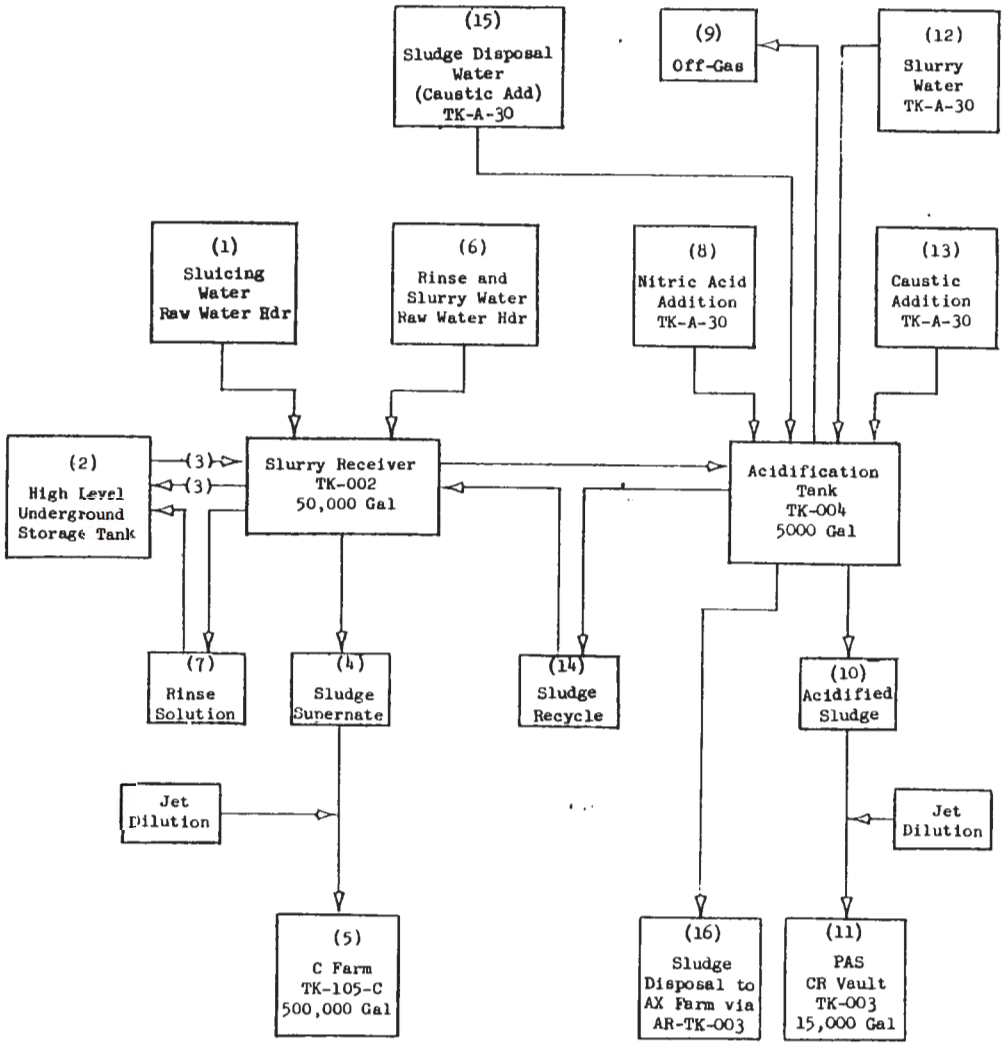

FIGURE VI

PAS FLOWSHEET

SLUDGE PREPARATION

TABLE 13

PAS FLOWSHEET
SLUDGE PREPARATION

(1) Sluicing Water

H_2O	Raw
Temp.	80°C
SpG	1.0
pH	-
Btu/Hr/Gal	0.0
Vol-Gal	23,500
Flow	Batch/440 TU

(2) Tank Sludge and Supernate - Total Gm-moles

Na	13×10^7	Sr	2350
Fe	5.0×10^5	Cs	245
Ni	1.8×10^4	Ce	2550
Cr	2.95×10^4	Pm	49
Ca	4.1×10^4	Am	2.65
Mn	1.35×10^4	Sb	3.6
Mg	-	Zr	6900
SiO_2	3.2×10^4	Ru	2400
AlO_2	8.2×10^5	Sm	840
NO_3	1.1×10^6	Y	940
NO_2	2.25×10^6	TRE(1)	6950
SO_4	1.0×10^6	Rh	16
PO_4	1.6×10^5	Pd	9.1
CO_3	3.2×10^6	Pu	61
Cl	5.5×10^3	Np	25
OH	1.7×10^6	U	25000
		Tc	30

Curies

Sr-90	1.2×10^7	Pm-147	7.1×10^6
Cs-137	1.3×10^6	Sb-125	6.7×10^4
Cs-134	7.7×10^3	Ru-106	2.35×10^4
Ce-144	3.9×10^5	Sm-151	1.9×10^5

Temp.	Ambient	
SpG	1.15 - 2.0	
pH	10-11	
Btu/Hr	310,000	
Vol-Gal	Supernate	16,000
	Sludge	100,000
Flow	440 TU Sludge/Batch	

(1) Excludes Pm, Ce, and Sm

9313022.1536

[redacted]

TABLE 13 (Cont.)

(3 - 4) Sludge Supernate

M

Na	4.0	Sr	9.0×10^{-6}
CrO_4	0.0085	Cs	9.4×10^{-5}
AlO_2	0.049	Rh	6.3×10^{-6}
SiO_2	0.0052	Pd	3.5×10^{-6}
NO_3	0.495	Tc	1.2×10^{-5}
NO_2	0.965	Pu	6.6×10^{-6}
SO_4	0.39	Np	2.0×10^{-6}
PO_4	0.033	U	7.2×10^{-3}
CO_3	0.75		
Cl	0.0021		
OH	0.082		

Ci/Gal

Cs-137	1.9	Sr-90	0.17
Cs-134	0.011		

Temp.	<50 C
SpG	1.16
pH	10 - 13
Btu/Hr/Gal	0.04
Vol-Gal	35,800
Flow Batch/440 TU	

(5) Diluted Sludge Supernate

M

Na	3.8	Sr	8.6×10^{-6}
CrO_4	0.0081	Cs	8.95×10^{-5}
AlO_2	0.046	Rh	5.95×10^{-6}
SiO_2	0.0050	Pd	3.3×10^{-6}
NO_2	0.47	Tc	1.1×10^{-5}
NO_3	0.92	Np	1.9×10^{-6}
SO_4	0.37	U	6.9×10^{-3}
PO_4	0.031	Pu	6.3×10^{-6}
CO_3	0.71		
Cl	0.0020		
OH	0.078		

Ci/Gal

Cs-137	1.8	Sr-90	0.16
Cs-134	0.010		

Temp.	Ambient
SpG	1.16
pH	10 - 13
Btu/Hr/Gal	0.04
Vol-Gal	37,700
Flow Batch/440 TU	

[redacted]

TABLE 13 (Cont.)

(6) Rinse and Slurry Water

H_2O	Raw
Temp.	80°C
SpG	1.0
pH	-
Btu/Hr/Gal	0.0
Vol-Gal	25,500
Flow	Batch/440 TU

(7) Rinse Solution

M			
Na	1.7	Sr	9.6×10^{-7}
CrO_4	0.0087	Cs	1.0×10^{-5}
AlO_2	0.026	Rh	6.6×10^{-7}
SiO_2	0.0019	Pd	3.7×10^{-7}
NO_3	0.049	Tc	1.2×10^{-6}
NO_2	0.10	Pu	2.6×10^{-6}
SO_4	0.042	Np	1.4×10^{-6}
PO_4	0.056	U	0.0073
CO_3	0.66		
Cl	0.00024		
OH	0.0081		

Ci/Gal			
Cs-137	0.20	Sr-90	0.019
Cs-134	0.012		

Temp.	80°C
SpG	1.1
pH	>7.0
Btu/Hr/Gal	Negligible
Vol-Gal	10,800
Flow	Batch/440 TU

(8) Nitric Acid Addition

M	
HNO_3	12.2
Temp.	Ambient
SpG	1.35
pH	-
Btu/Hr/Gal	0.0
Vol-Gal	1250
Flow	Batch/88 TU

TABLE 13 (Cont.)

(9) Off-Gas

SCF/88 TU

CO_2	5,800
NO_2	1.800
Temp.	Ambient
SpG	-
pH	-
Btu/Hr/Gal	0.0
Vol-SCF	7,600
Flow	Batch/88 TU

(10) Acidified Sludge

M

H^+	0.1	Sr	0.0016
Na	1.2	Cs	7.0×10^{-6}
Fe	0.35	Ce	0.0018
Ni	0.013	Pm	3.4×10^{-5}
Cr	0.0061	Am	1.3×10^{-6}
Ca	0.028	Sb	2.5×10^{-6}
Mn	0.0094	Zr	0.0048
Mg	Trace	Ru	0.0017
SiO_2	0.015	Sm	0.00058
Al	0.41	Y	0.00065
NO_3	3.6	TRE(1)	0.0048
SO_4	0.030	Rh	4.65×10^{-6}
PO_4	0.039	Pd	2.6×10^{-7}
Cl	0.00016	Pu	2.3×10^{-5}
CO_3	Negligible	Np	9.8×10^{-6}
NO_2	Negligible	U	0.0051
		Tc	8.6×10^{-7}

Ci/Gal

Sr-90	29	Pm-147	19
Cs-137	0.14	Sb-125	0.18
Cs-134	0.00085	Ru-106	0.062
Ce-144	1.0	Sm-151	0.50

Temp.	80-100°C
SpG	1.21
pH	1.0
Btu/Hr/Gal	7.3
Vol-Gal	4200
Flow	Batch/88 TU

[redacted]

TABLE 13 (Cont.)

(11) PAS

M

H^+	0.095	Sr	0.0015
Na	1.1	Cs	6.65×10^{-6}
Fe	0.33	Ce	0.0017
Ni	0.012	Pm	3.3×10^{-5}
Cr	0.0058	Am	1.2×10^{-6}
Ca	0.027	Sb	2.4×10^{-6}
Mn	0.0089	Zr	0.0045
Mg	Trace	Ru	0.0016
SiO_2	0.014	Sm	0.00055
Al	0.39	Y	0.00062
NO_3	3.4	TRE(1)	0.0046
SO_4	0.028	Rh	4.4×10^{-6}
PO_4	0.037	Pd	2.5×10^{-7}
Cl	0.00015	Pu	2.2×10^{-5}
		Np	9.3×10^{-6}
		U	0.0049
		Tc	8.2×10^{-7}

Ci/Gal

Sr-90	27.5	Pm-147	18
Cs-137	0.13	Sb-125	0.17
Cs-134	0.00081	Ru-106	0.059
Ce-144	0.97	Sm-151	0.47

Temp.	< 50 C
SpG	1.21
pH	1.0
Btu/Hr/Gal	0.69
Vol-Gal	4400
Flow	Batch/88 TU

(12) Slurry Water

M

H_2O	Raw
Temp	Ambient
SpG	1.0
pH	-
Btu/Hr/Gal	0.0
Vol-Gal	1300
Flow	Batch/440 TU

9313022.1547

[redacted]

[redacted]

TABLE 13 (Cont.)

(13) Caustic Addition

	M
NaOH	19
Temp.	Ambient
SpG	1.53
pH	-
Btu/Hr/Gal	0.0
Vol-Gal	71
Flow	Batch/440 TU

(14) Sludge Recycle

	M
Na	0.57
Fe	0.023
Ni	0.00085
Cr	0.00041
Ca	0.0019
Mn	0.00063
Mg	Trace
SiO_2	0.001
AlO_2	0.027
NO_3	0.26
SO_4	0.0020
PO_4	0.00031
Cl	0.00001
OH	0.5

Fiss. Prod. ~1%

Solids ~ 170 Gal ~ 3% Initial

1) Silicates
2) Phosphates
3) Pu 20-35%
4) Np 25-35%
5) U 2-10%
6) Sr 1-20%
7) Am 20-35%

Temp.	<50°C
SpG	1.0
pH	-
Btu/Hr/Gal	0.083
Vol-Gal	1500
Flow	Batch/440 TU Constant Recycle Between Sludge Disposals

931302.1541

[redacted]

[redacted]

TABLE 13 (Cont.)

(15) Sludge Disposal Water

H_2O	Raw
Temp.	Ambient
SpG	1.0
pH	-
Btu/Hr/Gal	0.0
Vol-Gal	1000-1330
Flow	Batch/1 to 3, 440 TU Batches

Add caustic to bring pH >8 before disposal.

(16) Sludge Disposal

	M
Na	0.075
Fe	0.023
Ni	0.00085
Cr	0.00041
Ca	0.0019
Mn	0.00063
Mg	Trace
SiO_2	0.001
AlO_2	0.027
NO_3	0.26
SO_4	0.0020
PO_4	0.00031
Cl	0.00001
OH	0.001 - 0.0001
Fiss. Prod.	<1%
Solids	170 - 510 Gal

1) Silicates
2) Phosphates
3) Pu 30%
4) Np 3%
5) U 3%
6) Sr 2%
7) Am 30%

Temp.	Ambient
SpG	1.0 - 1.2
pH	10
Btu/Hr/Gal	0.083
Vol-Gal	1500
Flow	Batch/1 to 3, 440 TU Batches

9313022.1542

[redacted]

TABLE 14

PAS FLOWSHEET

SLUDGE PREPARATION TIME CYCLE

	Operation	Time Cycle Volume Gal.	Flow GPM	Time Min.	Time Overlap Min.
1)	Add sluicing water to TK-002.	23,500	350	70	25
2)	Heat sluicing water to 80 C.	-	-	300	45
3)	Sluice the equivalent of 440 T.U. sludge from A-Farm to TK-002	-	-	700	
4)	Allow sludge solids to settle in TK-002 while cooling to 50 C.	-	-	180	
5)	Decant PSS from TK-002 to C-Farm.	35,800	60	580	
6)	Add rinse and sluice water to TK-002 while agitating and heating.	25,500	350	75	
7)	Heat water to 80 C while agitating.	-	-	300	30
8)	Agitate for 30 min. while maintaining temperature.	-	-	30	
9)	Allow solids to settle in TK-002.	-	-	120	
10)	Partially decant supernate at 80 C to A-Farm.	10,800	600	20	
11)	Add acid to slurry being agitated in TK-004.	1,250	30	43	12
12)	Slurry the equivalent of 88 T.U. sludge from TK-002 to TK-004.	2,900	50	60	
13)	Digest agitated solution in TK-004 at 95 C, and make further pH adjustment to 1 if necessary.	-	-	900	
14)	Cool solution to 50 C and allow solids to settle.	-	-	90	
15)	Decant supernate from TK-004 to TK-003 in the CR Vault.	4,200	60	70	

9810022.1543

TABLE 14 (Cont.)

Operation	Time Cycle Volume Gal.	Flow GPM	Time Min.	Time Overlap Min.
16) Repeat steps 11-15 four additional times to remove and treat remaining sludge in TK-004.	-	-	4600	
17) Add slurry water to TK-004 while heating to 80 C and agitating.	1,300	200	10	
18) Add caustic to slurry in TK-004.	71	30	5	
19) Digest solution at 80 C for 1 hour.	-	-	60	
20) Slurry solution in TK-004 to TK-002.	1,500	70	20	
21) Switching times.	-	-	120	

If solids have built up to a point where they are to be evaluated for disposal, the following procedures are used, starting at Step 17.

) Evaluate sludge for disposal.

18) If sufficient fission or other valuable materials remain onthe sludge to merit further treatment, administer further treatment in TK-004. Possible treatments include caustic-tartrate or carbonate metathesis.

19) When solids are ready for disposal, add slurry water and slurry.	900 - 1400	-
20) Transfer solids to A or AX Farm	1,500	-

931022.1544

Process Cycle Times

A. Total processing time/440 T.U. Batch

1. No time overlap of operations and excluding further solids treatment:

140 hr. = 5.8 day at 100% OAE
190 hr. = 8.0 day at 72% OAE

TABLE 14 (Cont.)

2. Including time overlap of operations and initiation of sluicing operating of next 440 T.U. batch midway through the last 900-min. digestion cycle and excluding further solids treatment:

   126 hr. = 5.2 day at 100% OAE
   175 hr. = 7.3 day at 72% OAE

   Assume that solids sample for disposal evaluation is taken before last digestion cycle and evaluated during digestion. Therefore, it does not affect the time cycle. It is also felt that further solids treatments to remove more Sr and TRE from them will be infrequent, and samples for evaluation need be taken once every 2 to 3 - 440 T.U. batches.

B. Total Processing time/8000 T.U.

1. See above for conditions:

   105 day at 100% OAE
   150 day at 72% OAE

2. See above for conditions:

   95 day at 100% OAE
   130 day at 75% OAE

9313022.1545

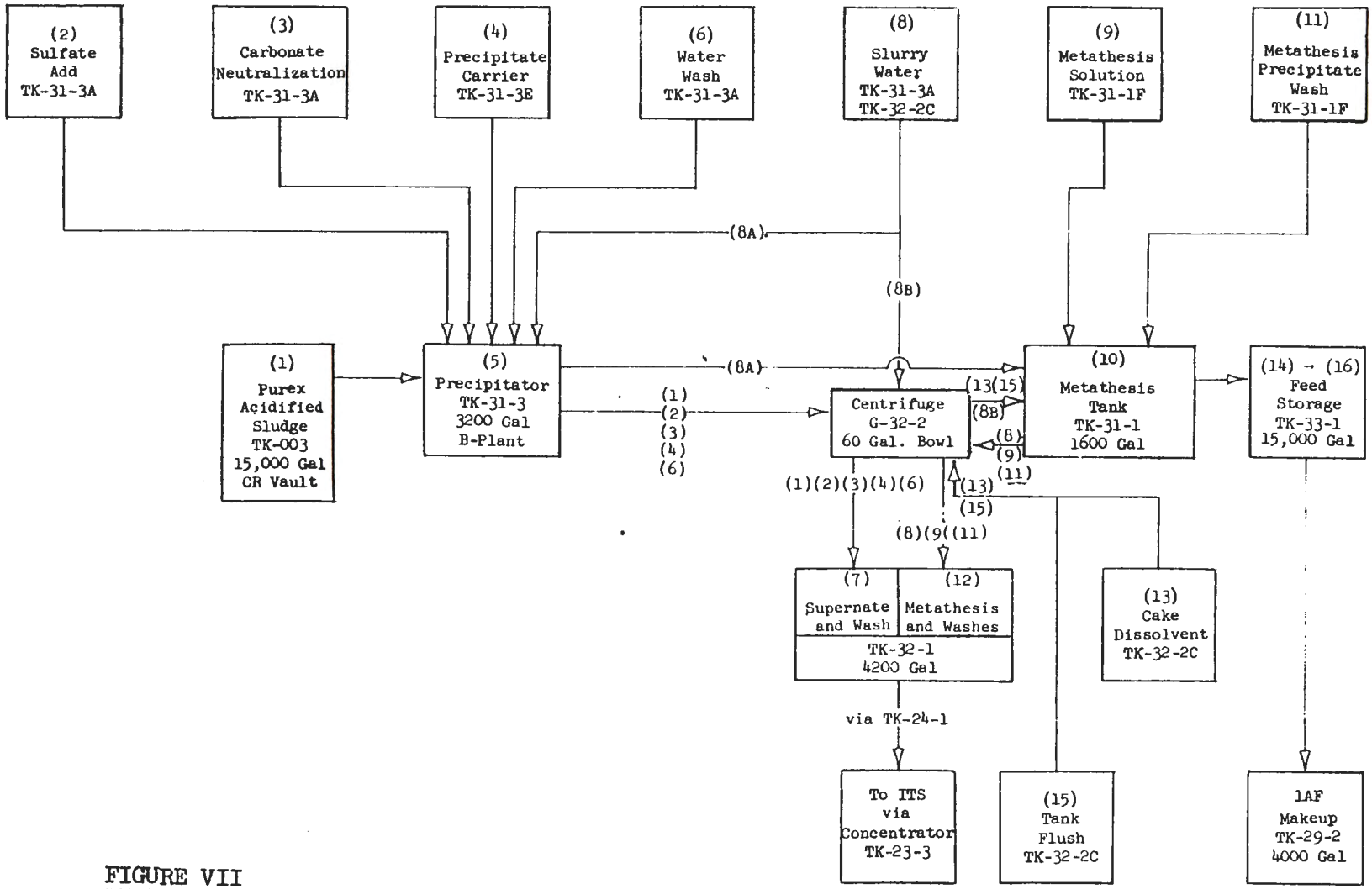

FIGURE VII

PAS FLOWSHEET

METALLIC ION REMOVAL

[redacted]

TABLE 15

PAS FLOWSHEET
METALLIC ION REMOVAL

(1) PAS

	M		
H^+	0.095	Sr	0.0015
Na	1.1	Cs	6.65×10^{-6}
Fe	0.33	Ce	0.0017
Ni	0.012	Pm	3.3×10^{-5}
Cr	0.0058	Am	1.2×10^{-6}
Ca	0.027	Sb	2.4×10^{-6}
Mn	0.0089	Zr	0.0045
Mg	Trace	Ru	0.0016
Al	0.39	Sm	0.00055
SiO_2	0.014	Y	0.00062
NO_3	3.4	TRE(1)	0.0046
SO_4	0.028	Rh	4.4×10^{-7}
PO_4	0.037	Pd	2.5×10^{-7}
Cl	0.00015	Pu	2.2×10^{-5}
		Np	9.3×10^{-6}
		U	0.0049
		Tc	8.2×10^{-7}

	Ci/Gal		
Sr-90	27.5	Pm-147	18
Cs-137	0.13	Sb-125	0.17
Cs-134	0.00085	Ru-106	0.059
Ce-144	0.97	Sm-151	0.47

Temp.	Ambient
SpG	1.21
pH	~ 1.0
Btu/Hr/Gal	0.69
Vol-Gal	100 = 1400 Gal.
Flow	3 Batches/Metathesis

(2) Sulfate Add

	M
$NaHSO_4$	6.0

Temp.	Ambient
SpG	1.44
pH	-
Btu/Hr/Gal	0.0
Vol.	29.4
Flow	3 Batches/Metathesis

(1) Excludes Pm, Ce, and Sm

9313022.1547

[redacted]

TABLE 15 (Cont.)

(3) Carbonate Neutralization

M	
Na_2CO_3	1.8
Temp.	Ambient
SpG	1.19
pH	-
Btu/Hr/Gal	0.0
Vol.	47
Flow	3 Batches/Metathesis

(4) Precipitate Carrier

M	
$Pb(NO_3)_2$	1.0
Temp.	Ambient
SpG	1.28
pH	-
Btu/Hr/Gal	0.0
Vol.	3.6
Flow	3 Batches/Metathesis

(5) Precipitator (Slurry)

M			
H^+	0.1	Sr	0.00083
Pb	0.02	Cs	3.65×10^{-6}
Na	2.5	Ce	0.00093
Fe	0.185	Pm	1.8×10^{-5}
Ni	0.0067	Am	6.8×10^{-7}
Cr	0.0032	Sb	1.3×10^{-6}
Ca	0.015	Zr	0.0025
Mn	0.0050	Ru	0.00089
Mg	Trace	Sm	0.000305
Al	0.22	Y	0.00034
SiO_2	0.0079	TRE(1)	0.00255
NO_3	1.95	Rh	2.5×10^{-7}
SO_4	1.00	Pd	1.4×10^{-7}
PO_4	0.021	Pu	1.2×10^{-5}
Cl	Trace	Np	5.2×10^{-6}
		U	0.0027
		Tc	4.55×10^{-7}

Ci/Gal			
Sr-90	15	Pm-147	9.8
Cs-137	0.072	Sb-125	0.093
Cs-134	0.00047	Ru-106	0.033
Ce-144	0.54	Sm-151	0.26

Temp.	80°C
SpG	1.2
pH	1.0
Btu/Hr/Gal	0.38
Vol.	180
Flow	3 Batches/Metathesis, Accumulate 3 batches

Note: Composition assumes homogeneous solution and one batch.

TABLE 15 (Cont.)

(6) Water Wash

M	
H_2O	Demineralized
Temp.	80°C
SpG	1.0
pH	-
Btu/Hr/Gal	0.0
Vol.	40
Flow	Batch/Metathesis

(7) Supernate and Washes

M			
H^+	0.09 - 0.1	Sr	3.85×10^{-5}
Pb	Negligible	Cs	3.4×10^{-6}
Na	2.3	Ce	3.9×10^{-5}
Fe	0.16	Pm	7.6×10^{-7}
Ni	0.0062	Am	2.8×10^{-8}
Cr	0.0030	Sb	1.2×10^{-6}
Ca	0.0125	Zr	0.0022
Mn	0.0046	Ru	0.00083
Mg	Trace	Sm	1.3×10^{-5}
Al	0.20	Y	0.00030
SiO_2	0.0073	TRE(1)	1.1×10^{-4}
NO_3	1.8	Rh	2.3×10^{-7}
SO_4	0.91	Pd	1.3×10^{-7}
PO_4	0.019	Pu	5.7×10^{-6}
Cl	Trace	Np	2.4×10^{-6}
		U	0.0025
		Tc	4.2×10^{-7}

Ci/Gal			
Sr-90	0.71	Pm-147	0.40
Cs-137	0.067	Sb-125	0.086
Cs-134	0.00047	Ru-106	0.030
Ce-144	0.023	Sm-151	0.10

Temp.	Ambient
SpG	1.19
pH	1.0 - 1.06
Btu/Hr/Gal	0.019
Vol.	580
Flow	Batch/Metathesis

9313022.1543

TABLE 15 (Cont.)

(8) Slurry Water

H_2O	Demineralized
Temp.	Ambient
SpG	1.0
pH	-
Btu/Hr/Gal	0.0
Vol.	Precipitator - 46 Centrifuge - 4
Flow	Batch/Metathesis

(9) Metathesis Solution

	M
NaOH	5.0
Na_2CO_3	0.5
Temp.	Ambient
SpG	1.13
pH	-
Btu/Hr/Gal	0.0
Vol.	46
Flow	Batch/Metathesis

(10) Metathesis Tank (Slurry)

	M		
Pb	0.11	Ce	0.00505
Na	2.8	Pm	9.7×10^{-5}
Fe	0.051	Am	3.6×10^{-6}
Ca	0.0083	Zr	0.00098
Al	0.0105	Sm	0.0016
OH	2.4	Y	0.0000985
SO_4	0.415	TRE(1)	0.014
CO_3	0.24	Pu	3.5×10^{-5}
Sr	0.044	Np	1.45×10^{-5}

Trace - Ni, Cr, Mn, Mg, Cs, Sb, Ru, U, NO_3, PO_4, Cl, SiO_3

	Ci/Gal
Sr-90	81
Cs-137	Negligible
Cs-134	Negligible
Ce-144	2.9
Pm-147	52
Sb-125	Negligible
Ru-106	Negligible
Sm-151	1.4

Temp.	80 C
SpG	1.1
pH	-
Btu/Hr/Gal	2.0
Vol.	96
Flow	Batch/Metathesis

Note: Composition assumes homogeneous solution.

(11) Metathesis - Precipitate Wash

	M
Na_2CO_3	0.1
Temp.	80 C
SpG	1.01
pH	-
Btu/Hr/Gal	0.0
Vol.	23
Flow	2 Batches/Metathesis

(12) Metathesis and Washes

	M
Pb	0.0705
Na	1.95
SO_4	0.14
OH	1.6
CO_3	0.12
Sr	4.7×10^{-5}
Ce	1.8×10^{-5}
Pm	3.4×10^{-7}
Am	1.3×10^{-8}
Zr	6.7×10^{-4}
Sm	5.8×10^{-6}
Y	6.55×10^{-5}
TRE(1)	4.85×10^{-5}
Pu	2.3×10^{-6}
Np	9.8×10^{-7}

Trace - Fe, Ni, Cr, Ca, Mn, Mg, Al, SiO_4, NO_3, SO_4, PO_4, Cl, Cs, Sb, Ru, Rh, Pd, Tc, U

	Ci/Gal		
Sr-90	0.87	SpG	1.06
Ce-144	0.010	pH	>13
Pm-147	0.185	Btu/Hr/Gal	0.020
Sm-151	0.0050	Vol.	140
Temp.	< 80 C	Flow	Batch/Metathesis

931022.1551

[redacted]

TABLE 15 (Cont.)

(13) Cake Dissolvent

	M
HNO_3	1.7
Temp.	Ambient
SpG	1.1
pH	-
Btu/Hr/Gal	0.0
Vol.	23
Flow	Batch/Metathesis

(14) Feed Storage - I

	M
H^+	0.26
Pb	0.034
Al	0.044
Fe	0.215
Ca	0.035
Na	0.20
SO_4	0.034
NO_3	1.7
Sr	0.018
Ce	0.021
Pm	0.00040
Am	0.000015
Zr	Negligible
Sm	0.0068
Y	Negligible
Pu	0.00013
TRE(1)	0.057
Np	0.0000545
U	Negligible

	Ci/Gal
Sr-90	330
Ce-144	12
Pm-124	220
Sm-151	5.85
Temp.	Ambient
SpG	1.16
pH	0.6
Btu/Hr/Gal	8.1
Vol.	23
Flow	Batch/Metathesis

(15) Tank Flush

	M
H_2O	Demineralized
Temp.	Ambient
SpG	1.0
pH	-
Btu/Hr/Gal	0.0
Vol.	7
Flow	Batch/Metathesis

(16) Feed Storage

	M
H^+	0.2
Pb	0.026
Al	0.034
Fe	0.165
Ca	0.027
Na	0.15
SO_4	0.026
NO_3	1.3
Sr	0.014
Ce	0.016
Pm	0.00031
Am	0.000012
Zr	Negligible
Sm	0.0052
Y	Negligible
Pu	0.00010
TRE(1)	0.044
Np	0.000042
U	Negligible

	Ci/Gal
Sr-90	260
Ce-144	9.2
Pm-144	170
Sm-151	4.5
Temp.	Ambient
SpG	1.13
pH	0.7
Btu/Hr/Gal	6.2
Vol.	30
Flow	Batch/Metathesis

[redacted]

[redacted]

TABLE 16

PAS FLOWSHEET
METALLIC ION REMOVAL TIME CYCLE

Operation	Volume Gal.	Time Cycle Flow GPM	Time Cycle Time Min.
A. Sulfate Strike in TK-31-3			
1) Transfer feed from CR Vault to TK-31-3, (line fill)	1400 (3000)	50	90
2) Add 6M $NaHSO_4$ to feed.	410	30	15
3) Add 1.8M Na_2CO_3 to feed.	660	30	20
4) Make pH adjustment.	-	-	40
5) Digest contents at 80 C for 1 hour.	-	-	60
6) Add 1M $PbNO_3$ to tank.	50	30	5
7) Digest tank contents at 80 C for 1 hour.	-	-	60
8) Allow solids to settle,	-	-	40
9) Decant tank supernate through centrifuge G-32-2 to TK-32-1.	2500	20	120
10) Repeat Steps 1) through 9) two more times.	-	-	900
11) Add wash water to TK-31-3.	560	30	20
12) Agitate tank contents.	-	-	20
13) Allow solids to settle.	-	-	40
14) Decant supernate through centrifuge G-32-2 to TK-32-1.	560	20	30
15) Add part of slurry water to centrifuge G-32-2 and clean out centrifuge contents to TK-31-3.	56	-	60
16) Add remaining slurry water to TK-31-3 and slurry tank contents to TK-21-1.	650	-	60
Switching time	-	-	90
Total time for three sulfate strikes			28 hours

931022.1552

[redacted]

TABLE 16 (Cont.)

Operation	Volume Gal.	Time Cycle Flow GPM	Time Cycle Time Min.
B. Metathesis in TK-31-1			
1) While transferring slurry to TK-31-3, add Na_2CO_3-NaOH metathesis solution to TK-31-1.	650+700	-	60
2) Heat metathesis solution to 80 C.	-	-	20
3) Digest solution at 80 C for 1 hour.	-	-	60
4) Allow solids to settle and cool.	-	-	40
5) Decant metathesis supernate through centrifuge G-32-2 to TK-32-1.	1350	20	70
6) Add metathesis cake wash to TK-31-1.	320	30	10
7) Agitate tank contents.	-	-	20
8) Allow solids to settle.	-	-	40
9) Decant supernate through centrifuge G-32-2 to TK-32-1 via G-32-2.	320	20	15
10) Repeat cake wash.	-	-	85
11) Add metathesis cake dissolvent to TK-31-1.	320	30	15
12) Agitate tank contents.	-	-	20
13) Allow residual solids to settle in tank.	-	-	40
14) Decant product supernate to feed storage TK-33-1.	320	75	5
15) Add water flush to TK-31-1 via G-32-2.	100	20	5
16) Allow any residual solids to settle.	-	-	30
17) Decant flush in TK-31-3 to TK-33-1	100	75	5
Switching time	-	-	60
			10 hours

Process Cycle Times

A. Total Processing Time/Metathesis - Since metathesis and sulfate strikes may be carried on concurrently, processing time is governed by time required for sulfate strikes: 28 hours.

B. PAS Processing Rate - 4200 gal PAS/28 hr = 3600 gal/day at 100% OAE
2500 gal/day at 75% OAE

931022.159

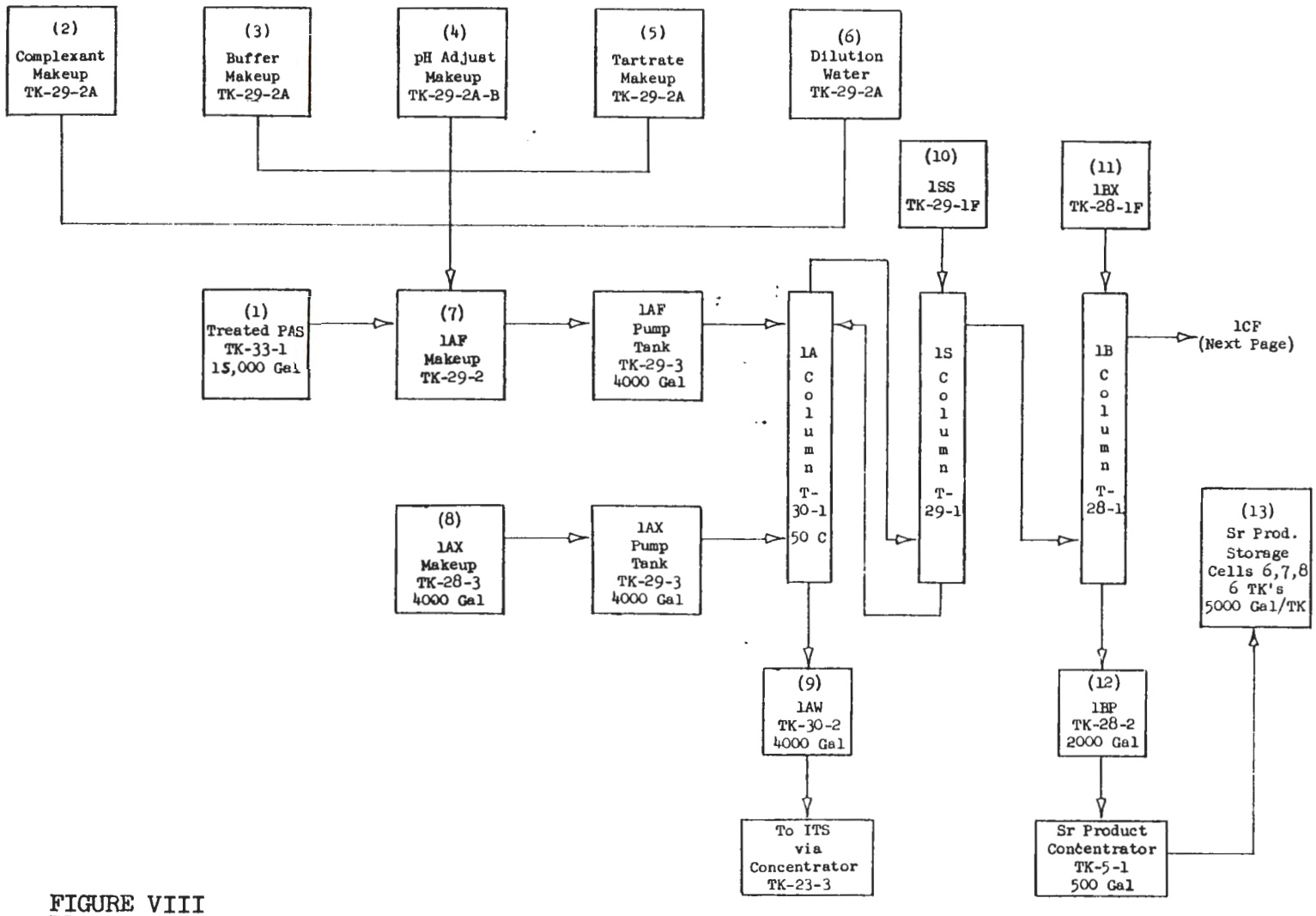

FIGURE VIII

PAS FLOWSHEET

SOLVENT EXTRACTION

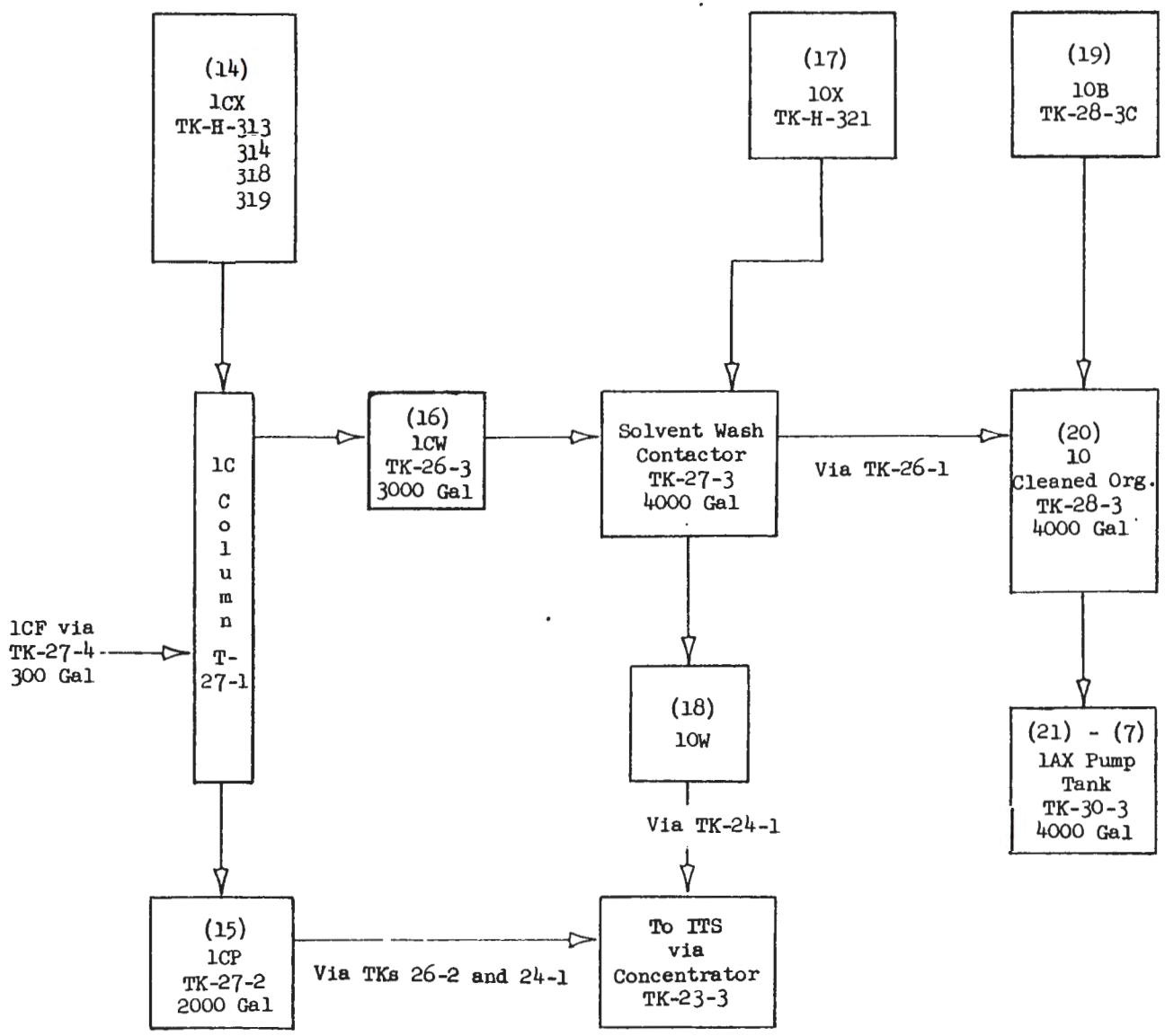

FIGURE VIII (Cont.)

TABLE 17
PAS FLOWSHEET
SOLVENT EXTRACTION

(1) Treated PAS

	M		
H^+	0.2	Sr	0.014
Pb	0.026	Ce	0.016
Al	0.034	Pm	0.00031
Fe	0.165	Am	0.000012
Ca	0.027	Sm	0.0052
Na	0.15	TRE(1)	0.044
SO_4	0.026	Pu	0.00010
NO_3	1.3	Np	0.000042

	Ci/Gal
Sr-90	260
Ce-144	9.2
Pm-147	170
Sm-151	4.5
Temp.	Ambient
SpG	1.13
pH	0.70
Btu/Hr/Gal	6.2
Vol.	100 = 1200 Gal.
Flow	Batch/1AF Batch

(2) Complexant Makeup

	M
Na_3NTA	1.8
Temp.	Ambient
SpG	1.32
pH	12.1
Btu/Hr/Gal	0.0
Vol.	15.0
Flow	Batch/1AF Batch

(3) Buffer Makeup

	M
HAcOH	11.5
Temp.	Ambient
SpG	1.25
pH	-
Btu/Hr/Gal	0.0
Vol.	5.45
Flow	Batch/1AF Batch

(4) pH Adjust Makeup

	M
NaOH	19
Temp.	Ambient
SpG	1.53
pH	-
Btu/Hr/Gal	0.0
Vol.	3.07
Flow	Batch/1AF Batch

(6) Feed Diluent

H_2O	Demineralized
Temp.	Ambient
SpG	1.0
pH	-
Btu/Hr/Gal	0.0
Vol.	124
Flow	Batch/1AF Batch

(5) Tartrate Makeup

Tartaric Acid	Solid
Weight - lb.	96
Flow	Batch/1AF Batch

(1) Excludes Pm, Ce, and Sm

931302.1559

[redacted]

TABLE 17 (Cont.)

(7) 1AF Makeup

	M		
H^+	0.000017	Tartrate	0.025
Pb	0.010	Sr	0.0056
Al	0.014	Ce	0.00645
Fe	0.0665	Pm	0.00012
Ca	0.011	Am	0.0000047
Na	0.62	Sm	0.0021
SO_4	0.10	TRE(1)	0.018
NO_3	0.44	Pu	0.000040
NTA	0.11	Np	0.000017
AcOH	0.25		

	Ci/Gal
Sr-90	100
Ce-144	3.7
Pm-147	67
Sm-151	1.8
Temp.	50 C for column entry
SpG	1.10
pH	4.4
Btu/Hr/Gal	2.5
Vol.	248
Flow	100 = 200 GPH

(8) 1AX Makeup

	M
TBP	0.2
HD2EHP	0.19
NaD2EHP	0.11
NPH	Diluent
Temp.	50 C for column entry
SpG	0.79
pH	-
Btu/Hr/Gal	0.0
Vol.	-
Flow	300

(9) 1AW

H^+	0.000033	Tartrate	0.016
Pb	0.0064	HEDTA	0.0036
Al	0.0057	Sr	2.5×10^{-5}
Fe	0.029	Ce	2.9×10^{-5}
Ca	0.000048	Pm	5.5×10^{-7}
Na	0.28	Am	2.1×10^{-8}
SO_4	0.046	Sm	9.3×10^{-6}
NO_3	0.20	TRE(1)	7.8×10^{-5}
NTA	0.048	Pu	1.8×10^{-5}
AcOH	0.33	Np	5.2×10^{-7}

	Ci/Gal
Sr-90	0.46
Ce-144	0.016
Pm-147	0.30
Sm-151	0.008
Temp.	~50 C
SpG	1.07
pH	4.2
Btu/Hr/Gal	0.011
Vol.	-
Flow	160

(10) 1SS

	M
HAcOH	0.5
$NaOH-HNO_3$	if required
Na_3HEDTA	0.0095
Temp.	Ambient
SpG	1.03
pH	2.4
Btu/Hr/Gal	0.0
Vol.	-
Flow	60

(11) 1BX

	M
HNO_3	0.03
Temp.	Ambient
SpG	1.0
pH	1.5
Btu/Hr/Gal	0.0
Vol.	-
Flow	100

[redacted]

[redacted]

TABLE 17 (Cont.)

(12) 1BP

	M		
H^+	0.008	Sr	0.0055
Pb	0.00010	Ce	1.2×10^{-6}
Al	0.00020	Pm	3.1×10^{-7}
Fe	0.000066	Am	4.7×10^{-9}
Ca	0.0037	Sm	5.2×10^{-7}
Na	0.003	TRE(1)	4.4×10^{-5}
NO_3	0.03	Pu	4.3×10^{-7}
		Np	1.7×10^{-6}

	Ci/Gal
Sr-90	100
Ce-144	0.0092
Pm-147	0.17
Sm-151	0.0045
Temp.	Ambient
SpG	1.02
pH	2.1
Btu/Hr/Gal	2.35
Vol.	-
Flow	100

(13) Concentrated 1BP

	M		
H^+	0.43	Sr	0.29
Pb	0.053	Ce	6.4×10^{-5}
Al	0.0125	Pm	1.7×10^{-5}
Fe	0.0035	Am	2.5×10^{-7}
Ca	0.20	Sm	2.8×10^{-5}
Na	0.16	TRE(1)	2.3×10^{-3}
NO_3	1.6	Pu	2.3×10^{-5}
		Np	8.9×10^{-5}

	Ci/Gal
Sr-90	5400
Ce-144	0.49
Pm-147	9.0
Sm-151	0.24
Temp.	Ambient
SpG	1.1
pH	0.37
Btu/Hr/Gal	125
Vol.	-
Flow	188

(14) 1CX

	M
HNO_3	2.5
Temp.	Ambient
SpG	1.06
pH	-
Btu/Hr/Gal	0.0
Vol.	-
Flow	40

(15) 1CP

	M
H^+	1.55
Pb	0.00013
Al	0.0012
Fe	0.0017
Ca	0.019
Na	Trace
NO_3	1.8
Sr	0.00014
Ce	0.016
Pm	0.00031
Am	0.000012
Sm	0.0052
TRE(1)	0.0435
Pu	Negligible
Np	Negligible

	Ci/Gal
Sr-90	3.4
Ce-144	9.15
Pm-147	170
Sm-151	4.45
Temp.	Ambient
SpG	1.07
pH	-
Btu/Hr/Gal	2.1
Vol.	-
Flow	40

9313022.1559

[redacted]

TABLE 17 (Cont.)

(16) 1CW

	M
TBP	0.2
HD2EHP	0.3
HNO_3	0.092
NPH	Diluent

Trace - Pb, Al, Fe, Ca, Na, Sr, Ce, Pm, Am, Sm, TRE

Fiss. Prod. <0.5%

Temp.	Ambient
SpG	0.79
pH	-
Btu/Hr/Gal	< 0.005
Vol.	Accumulate in 2000-Gal batches for batch wash.
Flow	300

(20) 10 Cleaned Organic

	M
TBP	0.2
NaD2EHP	0.3
NPH	Diluent

Temp.	Ambient
SpG	0.79
pH	-
Btu/Hr/Gal	Negligible
Vol.	2000
Flow	Batch/1CO Batch

(21) 1AX

[See (7)]

(17) 10X

	M
NaOH	1.4
Na_2 Tartrate	0.1

Temp.	Ambient
SpG	1.1
pH	-
Btu/Hr/Gal	0.0
Vol.	1000
Flow	150, Batch/1CO Batch

(18) 10W

	M
Na	0.98
OH	0.6
NO_3	0.18
Tartrate	0.1

Trace - Pb, Al, Fe, Ca, Sr, Ce, Pm, Am, Sm, TRE

Temp.	Ambient
SpG	1.0
pH	-
Btu/Hr/Gal	<0.025
Vol.	1000
Flow	50, Batch/1CO Batch

(19) 10B

	M
HNO_3	12.2

Temp.	Ambient
SpG	1.35
pH	-
Btu/Hr/Gal	0.0
Vol.	31.1
Flow	4.67, Batch/1CO Batch

93R3022.1550

TABLE 18

PUREX SUPERNATE COMPOSITION

	M		
Na	6.0	Rh	0.00024
NO_3	0.60	Pd	0.00013
NO_2	3.25	Tc	0.00044
SO_4	0.16	Cs	0.00083
PO_4	0.016	Sb	1.8×10^{-6}
Cl	0.091	Ru	0.000044
CO_3	0.86		

Trace - Pu, Np, U, Sr, RE, Am, Zr, Nb, Y

	Ci/Gal
Cs-137	15
Cs-134	0.096
Ce-144	0.0029
Ru-106	0.011
Temp.	Ambient
SpG	1.3
Btu/Hr/Gal	0.25
pH	10-11
Vol.	800,000 Gal/8000 Tons Uranium = 100 Gal/TU

Notes: (1) Chemical composition based on averaging compositions of supernates in TK's A-104 and A-106 in RL-SEP-183 RD.

(2) Supernate fission product composition largely based on that of TK-A-106 which had aged for two years.

(3) An eight-year age of the fission products was assumed.

9313072.1591

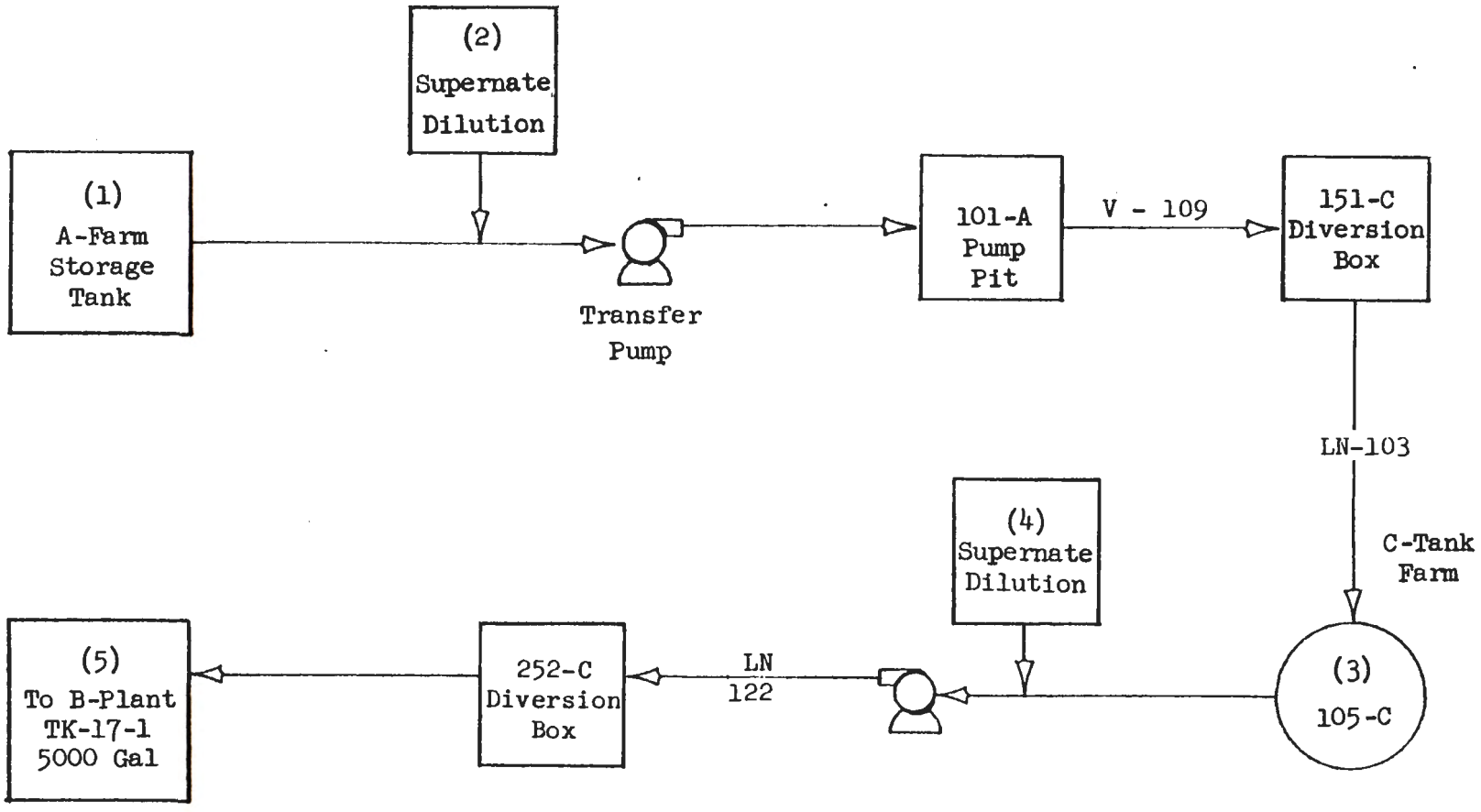

FIGURE IX

PSN FLOWSHEET
PSN REMOVAL FROM A-FARM

TABLE 19

PSN FLOWSHEET

PSN REMOVAL FROM A-FARM

Stream	1 Sludge Supernate	2 Dilution Water	3 Diluted Supernate	4 Dilution Water	5 PSN Feed
Composition	M	M	M	M	M
H_2O	-	Demineralized	-	Demineralized	-
Na	6.0	H_2O	5.4	H_2O	5.15
NO_3	0.60		0.54		0.52
NO_2	3.25		2.9		2.8
SO_4	0.16		0.14		0.13
PO_4	0.016		0.014		0.013
Cl	0.091		0.082		0.078
CO_3	0.86		0.77		0.73
Rh	0.00024		0.00022		0.00021
Pd	0.00013		0.00012		0.00011
Tc	0.00044		0.00040		0.00038
Cs	0.00083		0.00075		0.00071
Sb	0.0000018		0.0000016		0.0000015
Ru	0.000044		0.000040		0.000038
	Ci/Gal		Ci/Gal		
Cs-137	15		13.6		13
Cs-134	0.096		0.087		0.083
Ru-106	0.011		0.010		0.0095
Temp.	Ambient	Ambient	Ambient	Ambient	Ambient
SpG	1.23	1.0	1.27	1.0	1.25
Btu/Hr/Gal	0.25	0.0	0.22		0.21
pH	10-11	-	10-11	-	10-11
Vol., Gal	784,000	80,000	864,000	43,000	907,000
Flow	-	-	-	-	50 to B-Plant

Note: A 6-inch heel or 16,000 gallons of supernate is left in the tank.

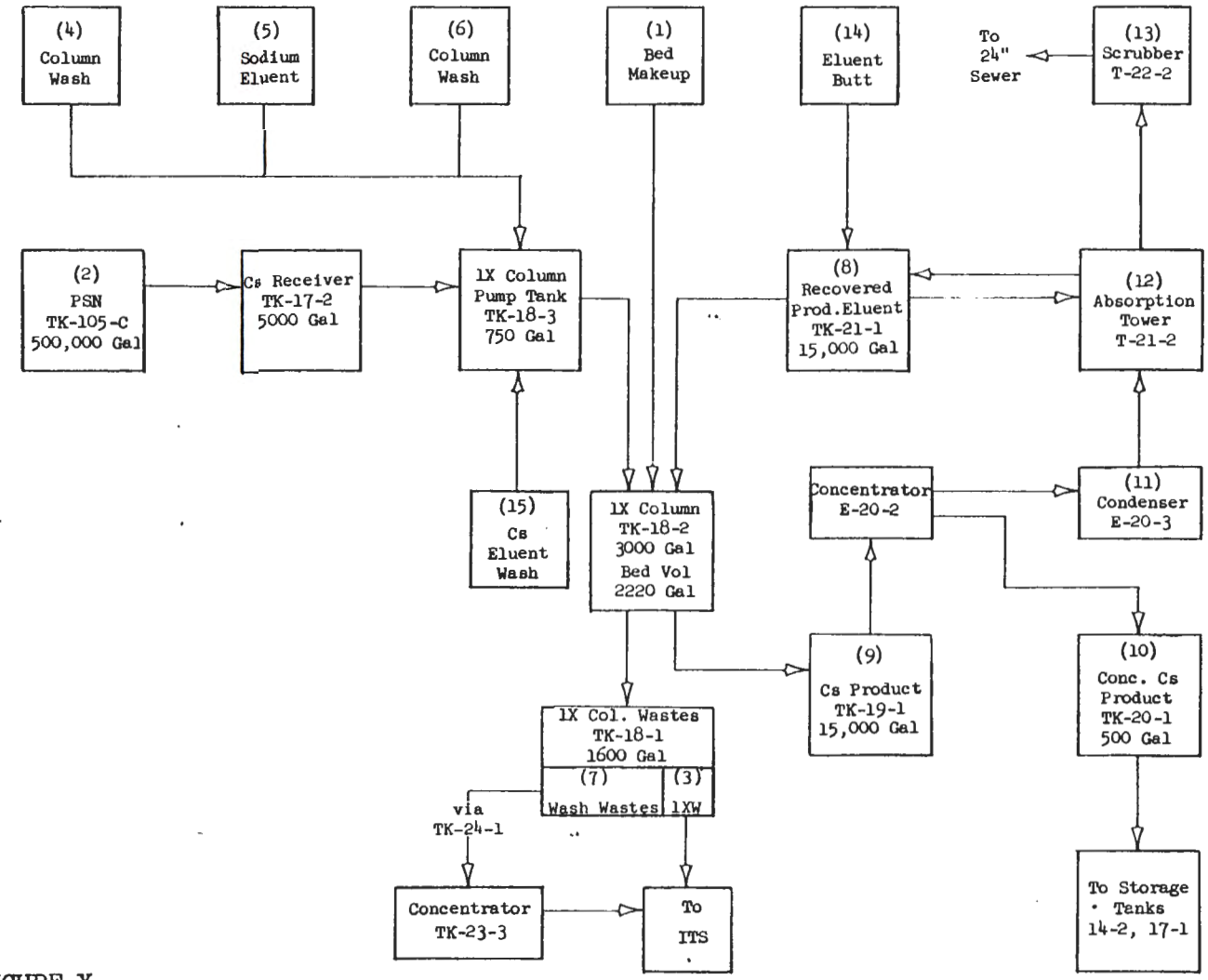

FIGURE X

PSN FLOWSHEET
CESIUM RECOVERY

TABLE 20

PSN FLOWSHEET
CESIUM RECOVERY

(1) Bed Makeup

Zeolite Linde AW-500

Temp.	Ambient
SpG	0.8
Mesh	20-50
Weight - lb	2300
Flow	Batch/8 Cycles

(2) PSN

Na	5.15	NO_3	0.52
Rh	2.1×10^{-4}	NO_2	2.8
Pd	1.1×10^{-4}	SO_4	0.13
Tc	3.8×10^{-4}	PO_4	0.013
Cs	7.1×10^{-4}	Cl	0.078
Sb	1.5×10^{-6}	CO_3	0.73
Ru	3.8×10^{-5}		

	Ci/Gal
Cs-137	13
Cs-134	0.0 → Negligible
Ru-106	0.0095

Temp.	Ambient
SpG	1.25
pH	10-11
Btu/Hr/Gal	0.21
Vol - CV	40
Flow - GPM	50

(3) 1XW

	M		
Na	5.15	NO_3	0.52
Rh	2.1×10^{-4}	NO_2	2.8
Pd	1.1×10^{-4}	SO_4	0.13
Tc	3.8×10^{-4}	PO_4	0.013
Cs	3.5×10^{-6}	Cl	0.078
Sb	1.5×10^{-6}	CO_3	0.73
Ru	3.8×10^{-5}		

	Ci/Gal
Cs-137	0.7
Ru-106	0.0095

Temp.	Ambient
SpG	1.25
pH	10-11
Btu/Hr/Gal	Negligible
Vol - CV	40
Flow - GPM	50

(4) Column Wash

H_2O	Demineralized
Temp.	Ambient
SpG	1.0
pH	-
Btu/Hr/Gal	0.0
Vol - CV	2
Flow - GPM	50

(5) Sodium Eluent

	M
$(NH_4)_2CO_3$	0.2
Temp.	Ambient
SpG	1.0
pH	-
Btu/Hr/Gal	0.0
Vol - CV	7
Flow - GPM	50

(6) Column Wash

H_2O	Demineralized
Temp.	Ambient
SpG	1.0
pH	-
Btu/Hr/Gal	0.0
Vol - CV	2
Flow - GPM	50

[redacted]

TABLE 20 (Cont.)

(7) Extraction Wash Wastes

M	4	5	6	15
H_2O	-	-	-	-
$(NH_4)_2CO_3$	-	0.2	-	-
Na	-	-	-	-
Cs		0.40% Na Scrub 0.10% Washes		

Ci/Gal				
Cs-137	< 1 for all effluent			
Temp.	Ambient	Ambient	Ambient	Ambient
SpG	1.0	1.0	1.0	1.0
pH	-	-	-	-
Btu/Hr/Gal		Negligible		
Vol - CV	2	7	2	1
Flow	50	50	50	50

(8) Recovered Product Eluent

	M
$(NH_4)_2CO_3$	3.0
NH_4OH	2.0
Temp.	55 C
SpG	1.11
pH	-
Btu/Hr/Gal	0.0
Vol - CV	12
Flow - GPM	14

(9) Cs Product

	M
Cs_2CO_3	0.0010
Na_2CO_3	0.0040
$(NH_4)_2CO_3$	3.0
NH_4OH	2.0
	Ci/Gal
Cs-137	43
Temp.	55 C
SpG	1.11
pH	-
Btu/Hr/Gal	0.70
Vol - CV	12
Flow - GPM	14 from Column 8 to concentrator

(10) Concentrated Cesium Product

	M
Cs_2CO_3	0.116
Na_2CO_3	0.46
	Ci/Gal
Cs-137	5000
Temp.	Ambient
SpG	1.1
pH	-
Btu/Hr/Gal	82
Vol - CV	0.067
Flow	Batch
Conc. Factor	116

(11) Condenser (Inlet)

	SCFM
CO_2	73
NH_3	190
H_2O	1100
Temp.	100 C
SpG	-
Btu/Hr/Gal	0.0
Vol - SCF	4.6×10^6
Flow - SCFM	1400

[redacted]

3313022.1551

TABLE 20 (Cont.)

(12) Absorption Tower (Inlet)

	SCFM
CO_2	18
NH_3	29
H_2O	11
Temp.	Ambient
SpG	-
Btu/Hr/Gal	0.0
Vol - SCF	1.9×10^5
Flow - SCFM	58

(13) Ammonia Scrubber (Inlet)

	SCFM
CO_2	5.1
NH_3	4.8
H_2O	5.5
Temp.	Ambient
SpG	-
Btu/Hr/Gal	0.0
Vol - SCF	5.0×10^4
Flow - SCFM	15.4

(14) Eluent Butt

	SCFM
CO_2	5.1
NH_3	4.8
H_2O	As required
Temp.	Ambient
SpG	-
Btu/Hr/Gal	0.0
Vol - SCF	3.2×10^4
Flow - SCFM	9.9

(15) Cesium Eluent Wash

H_2O	Demineralized
Temp.	Ambient
SpG	1.0
pH	-
Btu/Hr/Gal	0.0
Vol - CV	1
Flow - GPM	50

(Used to remove eluent from column)

931022.1502

TABLE 21

PSN FLOWSHEET

CESIUM RECOVERY TIME CYCLE

Time Cycle		Volume Gal.	Flow Rate, GPM	Time, Min.
(1)	Bed Makeup	2,300	AW-500	30
(2)	Cesium Loading	89,000	50	1800
(3)	Column Wash	4,400	50	90
(4)	Na Scrub	15,000	50	310
(5)	Column Wash	4,400	50	90
(6)	Cesium Elution	26,400	14	1900
(7)	Cesium Concentration(1)	26,200	8	(3300)(1)
(8)	Cesium Eluent Wash	2,200	50	40
(9)	Switching Time	-	-	30
		Total Time/Cycle		4300 min.
				72 hr.

PSN Processing Rate $\frac{89,000 \text{ Gal}}{3.0 \text{ day}} = 30,000 \text{ GPD}$

(1) Cesium concentration time not included in over-all time cycle since other operations being performed concurrently require more time.

9313022.1569

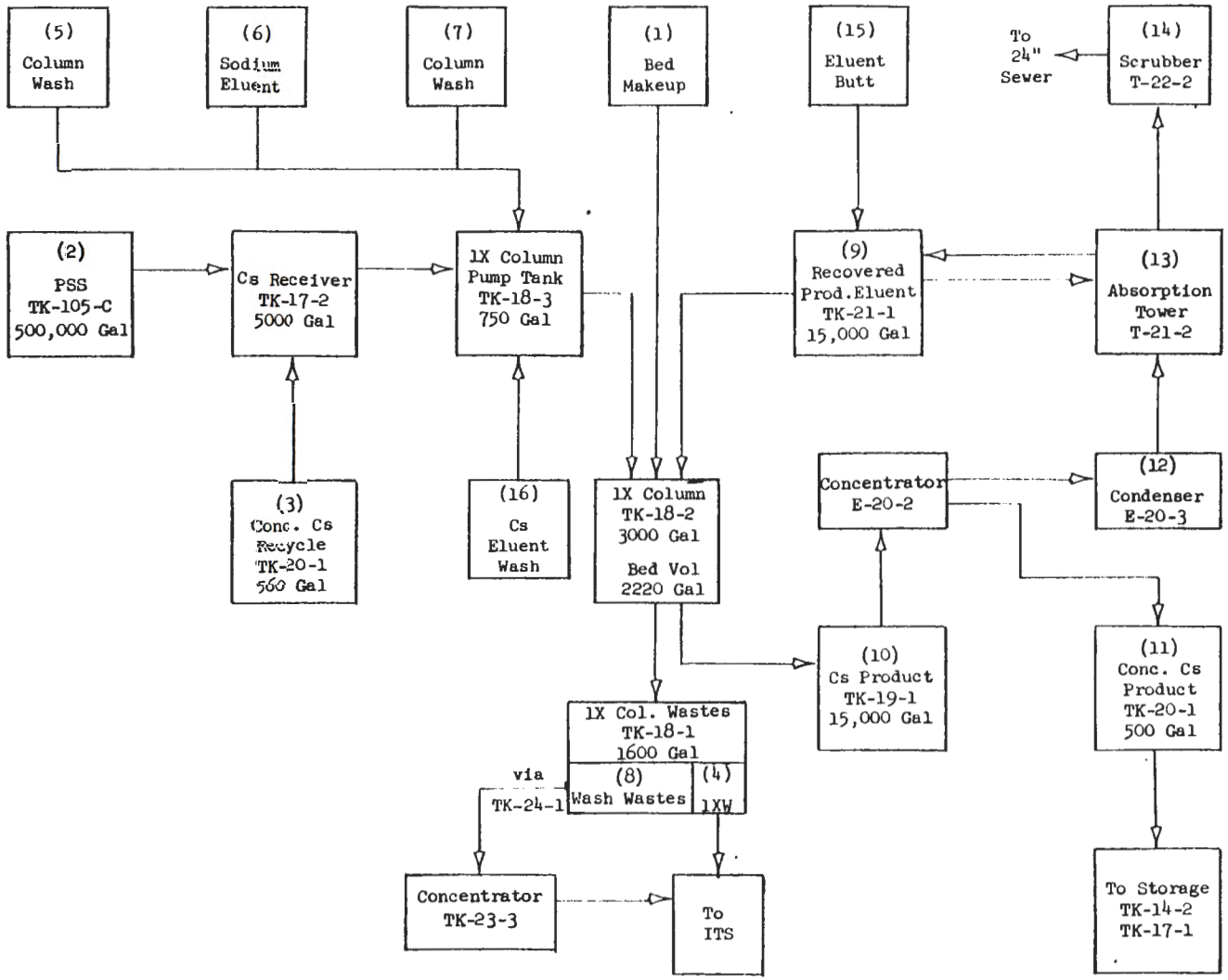

FIGURE XI

PSS FLOWSHEET

CESIUM RECOVERY

TABLE 22

PSS FLOWSHEET

CESIUM RECOVERY

(1) Bed Makeup

Zeolite Linde AW-500

Temp.	Ambient
SpG	0.80
Mesh	20-50
Weight - lb	3200
Flow	Batch/8 Cycles

(2) PSS

	M		
Na	3.8	OH	0.078
CrO_4	0.0081	Sr	8.6×10^{-6}
AlO_2	0.046	Cs	8.95×10^{-5}
SiO_2	0.0050	Rh	5.95×10^{-6}
NO_2	0.47	Pd	3.3×10^{-6}
NO_3	0.92	Tc	1.1×10^{-5}
SO_4	0.37	Pu	6.3×10^{-6}
PO_4	0.031	Np	1.9×10^{-6}
CO_3	0.71	U	6.85×10^{-3}
Cl	0.0020		

	Ci/Gal
Cs-137	1.8
Cs-134	0.010
Sr-90	0.16
Temp.	Ambient
SpG	1.16
pH	10-13
Btu/Hr/Gal	0.04
Vol - CV	54
Flow - GPM	50

(3) Concentrated Product Recycle

	M
Cs	0.356
Na	1.42
CO_3	0.89

	Ci/Gal		
Cs-137	7650	Btu/Hr/Gal	125
Temp.	Ambient	Vol - CV	0.060
SpG	1.1	Flow	Batch/Cycle
pH	-		

Add to TK-17-2 after 25 CV of PSS has passed through TK-18-2.

(4) 1XW

	M		
Na	3.8	OH	0.078
CrO_4	0.0081	Sr	$<6 \times 10^{-8}$
AlO_2	0.046	Cs	$<3.3 \times 10^{-6}$
SiO_2	0.0050	Rh	5.95×10^{-6}
NO_2	0.47	Pd	3.3×10^{-6}
NO_3	0.92	Tc	1.10×10^{-5}
SO_4	0.37	Pu	6.3×10^{-6}
PO_4	0.031	Np	1.9×10^{-6}
CO_3	0.71	U	6.9×10^{-3}
Cl	0.0021		

	Ci/Gal
Cs-137	< 0.065
Cs-134	< 0.00037
Sr-90	0.001
Temp.	Ambient
SpG	1.16
pH	10-13
Btu/Hr/Gal	Negligible
Vol - CV	54
Flow - GPM	50

(5) Column Wash

H_2O	Demineralized
Temp.	Ambient
SpG	1.0
pH	-
Btu/Hr/Gal	0.0
Vol - CV	2
Flow - GPM	50

(6) Sodium Eluent

	M
$(NH_4)_2CO_3$	0.2
Temp.	Ambient
SpG	1.0
pH	-
Btu/Hr/Gal	0.0
Vol- CV	7
Flow - GPM	50

9313022.1559

TABLE 22 (Cont.)

(7) Column Wash

H_2O	Demineralized
Temp.	Ambient
SpG	1.0
pH	-
Btu/Hr/Gal	0.0
Vol - CV	2
Flow - GPM	50

(8) Extraction Wash Wastes

M	(5)	(6)	(7)	(16)
H_2O	-	-	-	-
$(NH_4)_2CO_3$	-	0.2	-	-
Na	-	0.2	-	-
Cs	0.40% Na Scrub, 0.1% Washes			
Sr	"	"	"	
Ci/Gal				
Cs-137	0.5			
Sr-90	0.05 for all effluent			
Temp.	Ambient			
SpG	1.0	1.0	1.0	1.0
Btu/Hr/Gal	Negligible			
Vol - CV	2	7	2	1
Flow - BPM	50	50	50	50

(9) Recovered Product Eluent

	M
$(NH_4)_2CO_3$	3.0
NH_4OH	2.0
Temp.	55 C
SpG	1.11
pH	-
Btu/Hr/Gal	0.0
Vol - CV	12
Flow - GPM	14

(10) Cesium Product

	M
Cs_2CO_3	0.00106
Na_2CO_3	0.0043
$(NH_4)_2CO_3$	3.0
NH_4OH	2.0
$SrCO_3$	1.9×10^{-5}
Ci/Gal	
Cs-137	46
Cs-134	0.45
Sr-90	0.72
Temp.	55 C
SpG	1.11
pH	-
Btu/Hr/Gal	0.745
Vol - CV	12
Flow - GPM	14 from Column, 8 to concentrator

(11) Concentrated Cesium Product

	M
Cs_2CO_3	0.115
Na_2CO_3	0.47
$SrCO_3$	0.002
Ci/Gal	
Cs-137	5000
Cs-134	49
Sr-90	78
Temp.	Ambient
SpG	1.1
Btu/Hr/Gal	81
Vol - CV	0.11
Flow	Batch
Conc. Factor	110

9313022.1570

[redacted]

TABLE 22 (Cont.)

(12) Condenser (Inlet)

	SCFM
CO_2	73
NH_3	190
H_2O	1100
Temp.	100 C
SpG	-
Btu/Hr/Gal	0.0
Vol - SCF	4.6×10^6
Flow - SCFM	40

(13) Absorption Tower (Inlet)

	SCFM
CO_2	18
NH_3	29
H_2O	11
Temp.	Ambient
SpG	-
Btu/Hr/Gal	0.0
Vol - SCF	1.9×10^5
Flow - SCFM	58

(14) Ammonia Scrubber (Inlet)

	SCFM
CO_2	5.1
NH_3	4.8
H_2O	5.5
Temp.	Ambient
SpG	-
Btu/Hr/Gal	0.0
Vol - SCF	5.0×10^4
Flow - SCFM	15.4

(15) Eluent Butt

	SCFM
CO_2	5.1
NH_3	4.8
H_2O	As required
Temp.	Ambient
SpG	-
Btu/Hr/Gal	0.0
Vol - SCF	3.2×10^4
Flow - SCFM	9.9

(16) Cesium Eluent Wash

H_2O	Demineralized
Temp.	Ambient
SpG	1.0
pH	-
Btu/Hr/Gal	0.0
Vol - CV	1
Flow - GPM	50

(Used to displace eluent from column)

9313022.1571

[redacted]

TABLE 23

PSS FLOWSHEET

CESIUM RECOVERY TIME CYCLE

Time Cycle		Volume, Gal.	Flow Rate, GPM	Time, Min.
(1)	Bed Makeup	2,300	AW-500	30
(2)	Cesium Loading	120,000	50	2400
(3)	Cesium Recycle(1)	110	75	(2)(1)
(4)	Column Wash	4,400	50	90
(5)	Na Scrub	15,000	50	310
(6)	Column Wash	4,400	50	90
(7)	Cesium Elution	26,400	14	1900
(8)	Cesium Concentration(1)	26,200	8	(3300)(1)
(9)	Cesium Eluent Wash	2,200	50	44
(10)	Switching Time	-	-	30
		Total Time/Cycle		4900 min.
				82 hr.

$$\text{PSS Processing Rate} = \frac{120{,}000 \text{ Gal}}{3.4 \text{ Day}} = 35{,}000 \text{ GPD}$$

(1) Operation performed concurrent with other operations and not time-limiting.

93 0022 1572

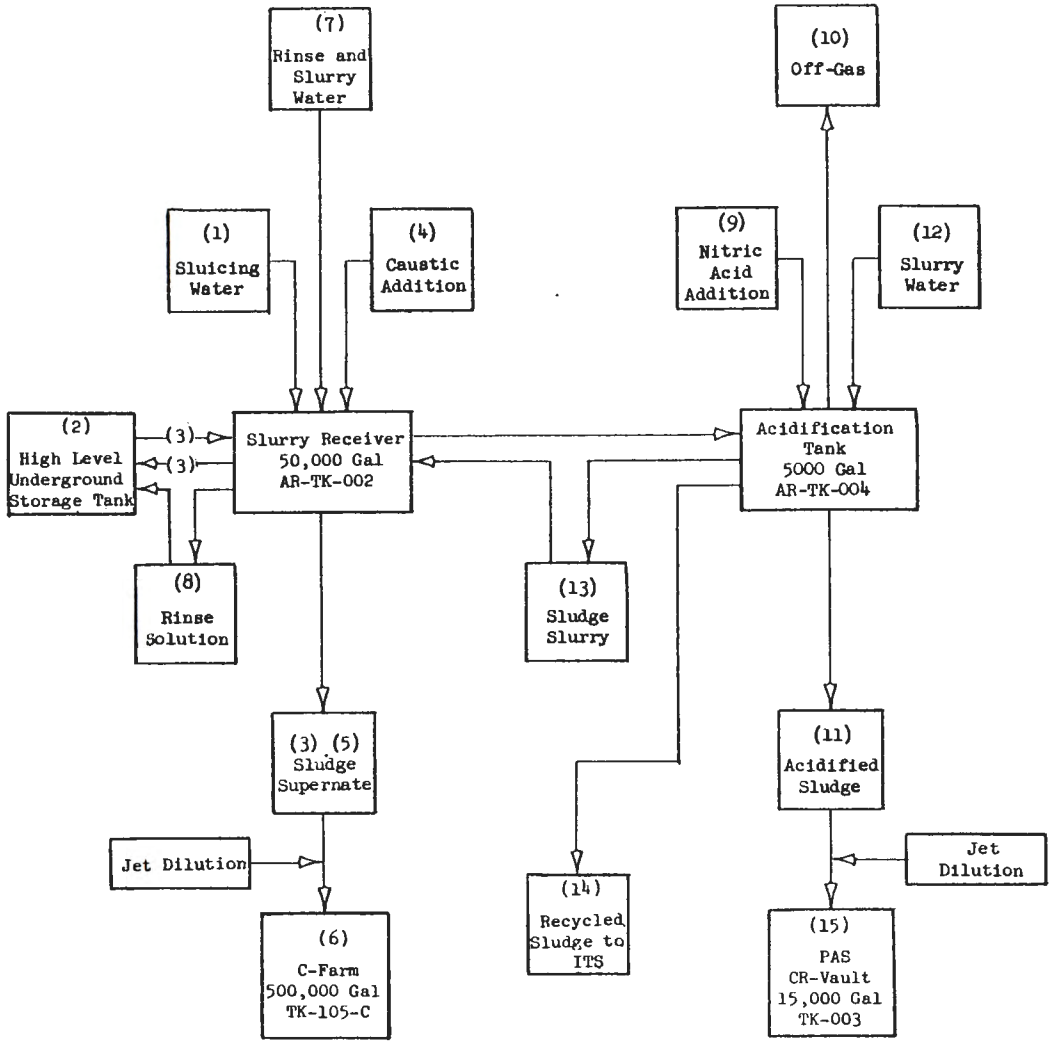

FIGURE XII

PAS FLOWSHEET

SLUDGE PREPARATION -

Pu, Np and U Recovery

TABLE 24

PAS FLOWSHEET

SLUDGE PREPARATION - Pu, Np, U RECOVERY

(1) Sluicing Water

H_2O	Demineralized
Temp.	Ambient
SpG	1.0
pH	-
Btu/Hr/Gal	0.0
Vol - Gal	23,000
Flow - GPM	Batch/440 TU

(2) Tank Sludge and Supernate

Total gm-moles

Na	1.3×10^7	Sr	2350
Fe	5.0×10^5	Cs	245
Ni	1.8×10^4	Ce	2550
Cr	2.94×10^4	Pm	49
Ca	4.1×10^4	Am	2.65
Mn	1.35×10^4	Sb	3.6
Mg	-	Zr	6900
SiO_2	3.2×10^4	Ru	2400
AlO_2	8.2×10^5	Sm	840
NO_3	1.1×10^6	Y	940
NO_2	2.25×10^6	TRE	6950
SO_4	1.0×10^6	Rh	16
PO_4	1.6×10^5	Pd	9.1
CO_3	3.2×10^6	Pu	61
Cl	5.5×10^3	Np	25
OH	1.7×10^6	U	25,000
		Tc	30

Curies

Sr-90	1.2×10^7
Cs-137	1.3×10^6
Cs-134	7.7×10^3
Ce-144	3.9×10^5
Pm-147	7.1×10^6
Sb-125	6.7×10^4
Ru-106	2.35×10^4
Sm-151	1.9×10^5

Temp.	Ambient
SpG	1.5 - 2.0
pH	10-11
Btu/Hr/Gal	306,000
Vol - Gal	16,000 Supernate 102,000 Sludge
Flow	440 TU/Sludge Batch

(4) Caustic Addition

	M
NaOH	19
Temp.	Ambient
SpG	1.53
pH	-
Btu/Hr/Gal	0.0
Vol - Gal	4200
Flow - GPM	Batch/440 TU

(3-5) Sludge Supernate

	M
Na	6.1
CrO_4	0.0086
SiO_3	0.0052
AlO_2	0.059
NO_3	0.31
NO_2	0.82
SO_4	0.38
PO_4	0.017
CO_3	1.0
Cl	0.002
OH	2.0

Sr-90	8.5×10^{-6}
Cs	8.9×10^{-5}
Rh	5.9×10^{-6}
Pd	3.3×10^{-6}
Pu	1.1×10^{-6}
Np	9.3×10^{-7}
Tc	1.1×10^{-5}
TRE	Trace

	Ci/Gal
Cs-137	1.8
Cs-134	0.01
Sr-90	0.165
Temp.	80 C
SpG	1.2
pH	-
Btu/Hr/Gal	0.033
Vol - Gal	37,000
Flow	Batch/440 TU

9313022.1574

[redacted]

TABLE 24 (Cont.)

(6) Diluted Sludge Supernate

	M		
Na	5.89	OH	1.9
CrO_4	0.0082	Sr	8.1×10^{-6}
SiO_3	0.0049	Cs	8.45×10^{-5}
AlO_2	0.056	Rh	5.6×10^{-6}
NO_3	0.30	Pd	3.1×10^{-6}
NO_2	0.78	Pu	1.05×10^{-6}
SO_4	0.36	Np	$\leq 8.8 \times 10^{-7}$
PO_4	0.016	Tc	1.05×10^{-5}
CO_3	0.97		
Cl	0.0019		

	Ci/Gal
Cs-137	1.7
Cs-134	0.01
Sr-90	0.16
Temp.	<50 C
SpG	1.2
pH	-
Btu/Hr/Gal	0.031
Vol - Gal	39,000
Flow	Batch/440 TU

(7) Rinse and Slurry Water

H_2O	Demineralized
Temp.	Ambient
SpG	1.0
pH	-
Btu/Hr/Gal	0.0
Vol - Gal	23,000
Flow - GPM	Batch/440 TU

(8) Rinse Solution

	M		
Na	1.6	Cl	0.00024
CrO_4	0.0043	OH	0.24
SiO_3	0.00062	Sr	1.0×10^{-6}
AlO_2	0.098	Cs	1.1×10^{-5}
NO_3	0.16	Rh	7.1×10^{-7}
NO_2	0.098	Pd	3.95×10^{-7}
SO_4	0.074	Pu	1.3×10^{-7}
PO_4	0.065	Np	$\leq 1.1 \times 10^{-7}$
CO_3	0.32	Tc	1.3×10^{-6}
		TRE	Trace

	Ci/Gal
Cs-137	0.21
Cs-134	0.0013
Sr-90	0.020
Temp.	80 C
SpG	1.08
pH	-
Btu/Hr/Gal	0.0039
Vol - Gal	10,000
Flow	Batch/440 TU

(9) Nitric Acid Addition

	M
HNO_3	12.2
Temp.	Ambient
SpG	1.35
pH	-
Btu/Hr/Gal	0.0
Vol - Gal	1250
Flow	Batch/88 TU

(10) Off-Gas

	SCF
CO_2	2800
NO_2	1700
Temp.	Ambient
SpG	-
pH	-
Btu/Hr/Gal	0.0
Vol - Ft^3	4500
Flow	Batch/88 TU

9313022.1576

[redacted]

TABLE 24 (Cont.)

(11) Acidified Sludge (Solution)

	M		
H^+	0.1	Cs	7.5×10^{-6}
Na	1.15	Ce	0.0018
Fe	0.35	Pm	3.4×10^{-5}
Ni	0.013	Am	1.8×10^{-6}
Cr	0.0030	Sb	2.5×10^{-6}
Ca	0.028	Zr	0.0048
Mn	0.0094	Ru	0.0017
Mg	Trace	Sm	0.00058
Al	0.41	Y	0.00065
SiO_2	0.012	TRE	0.0048
NO_3	3.5	Rh	4.9×10^{-7}
NO_2	Negligible	Pd	2.8×10^{-7}
SO_4	0.052	Pu	0.000030
PO_4	0.046	Np	0.000016
CO_3	Negligible	U	0.016
Cl	0.00017	Tc	9.3×10^{-7}
Sr	0.0015		

	Ci/Gal
Sr-90	29
Cs-137	0.15
Cs-134	0.00091
Ce-144	1.0
Pm-147	19
Sb-125	0.18
Ru-106	0.062
Sm-151	0.50

Temp.	Ambient
SpG	1.25
pH	1
Btu/Hr/Gal	0.73
Vol - Gal	4200
Flow	Batch/88 TU

(12) Slurry Water

H_2O	Demineralized
Temp.	Ambient
SpG	1.0
pH	-
Btu/Hr/Gal	0.0
Vol - Gal	1500
Flow	Batch/440 TU

(13) Sludge Slurry

	M
H^+	0.0036
Na	0.042
Fe	0.013
Ni	0.00047
Cr	0.00011
Ca	0.0010
Mn	0.00034
Mg	Trace
Al	0.015
SiO_2	0.00044
NO_3	0.13
SO_4	0.0019
PO_4	0.0017
Fiss. Prod.	Negligible

Solids:
1) Silicates
2) Phosphates
3) Pu 25%
4) Np 7%
5) U 7%
6) Sr 7%

Temp.	Ambient
SpG	1.0
pH	2.3
Btu/Hr/Gal	Negligible
Vol - Gal	1500
Flow	Batch/440 TU

(14) Recycled Sludge to ITS

As the undissolved sludge for each batch is recycled, there is solids accumulation in the system. At some level in the 004 TK after acid add, the solids are to be evaluated for further treatment or disposal.

9313022.1575

TABLE 24 (Cont.)

(15) PAS

	M		
H^+	0.095	Cs	7.1×10^{-6}
Na	1.1	Ce	0.0017
Fe	0.33	Pm	3.3×10^{-5}
Ni	0.012	Am	1.75×10^{-6}
Cr	0.0029	Sb	2.4×10^{-6}
Ca	0.027	Zr	0.0045
Mn	0.0089	Ru	0.0016
Mg	Trace	Sm	0.00055
Al	0.39	Y	0.00062
SiO_2	0.0115	TRE	0.0046
NO_3	3.3	Ru	4.7×10^{-7}
SO_4	0.050	Pd	2.65×10^{-7}
PO_4	0.044	Pu	2.8×10^{-5}
Cl	0.00016	Np	1.5×10^{-5}
Sr	0.0014	U	0.016
		Tc	8.9×10^{-7}

	Ci/Gal
Sr-90	27
Cs-137	0.14
Cs-134	0.00086
Ce-144	0.97
Pm-147	18
Sb-125	0.17
Ru-106	0.059
Sm-151	0.47
Temp.	Ambient
SpG	1.25
pH	1
Btu/Hr/Gal	0.69
Vol - Gal	4400
Flow	Batch/88 TU

F313022.1577

UNCLASSIFIED

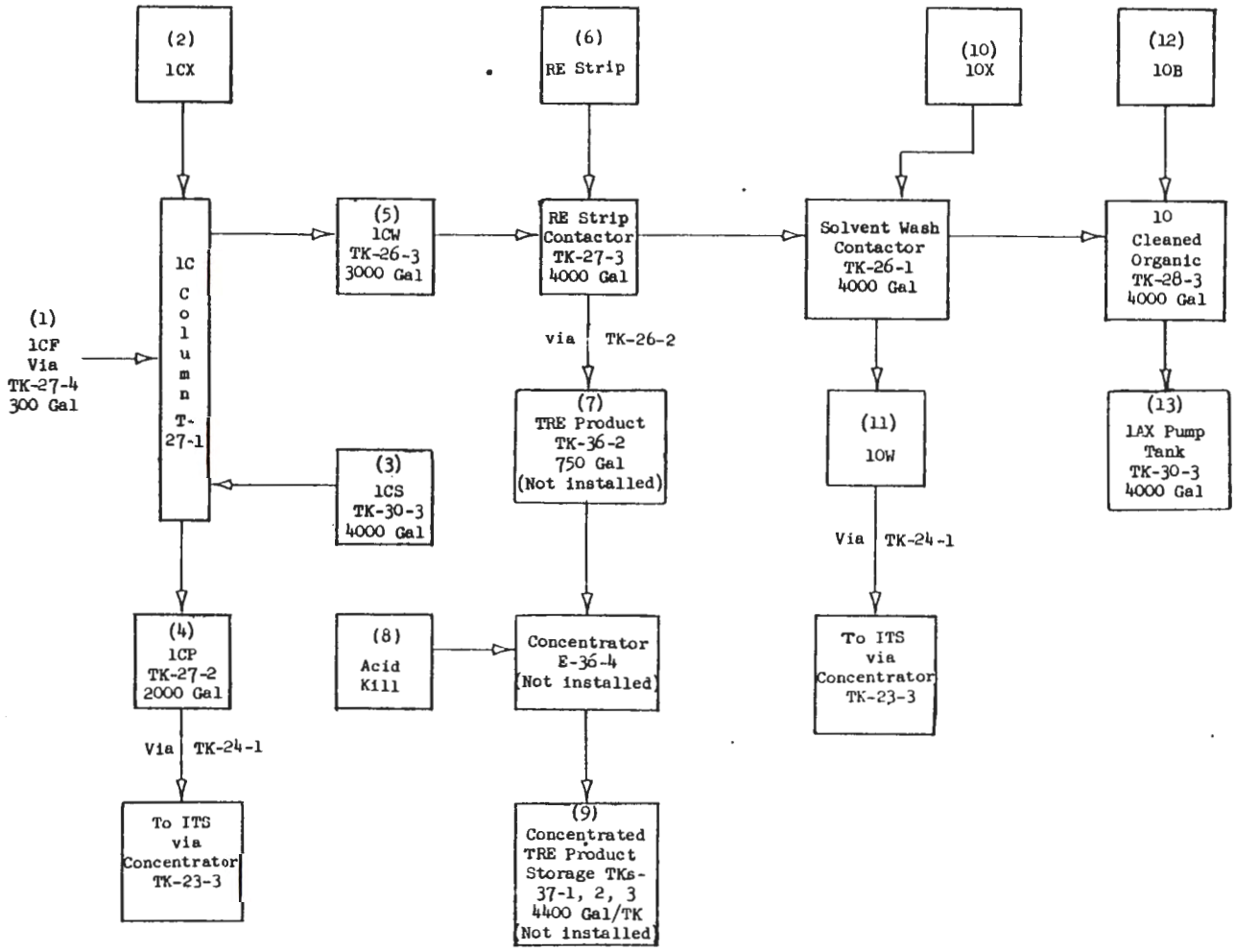

FIGURE XIII

PAS FLOWSHEET

CALCIUM REMOVAL FROM

RARE EARTH PRODUCT

UNCLASSIFIED

TABLE 25

PAS FLOWSHEET
CALCIUM REMOVAL FROM RARE EARTH PRODUCT

Note: Feed composition, flow rate, and concentrations similar to the 1CF stream in the PAS solvent Extraction Flowsheet (Table 17).

(1) 1CF

M			
TBP	0.20	Sr	0.000019
HD2EHP	0.30	Ce	0.00215
NPH	Diluent	Pm	0.000041
		Am	1.6×10^{-7}
Ca	0.0025	Sm	0.00070
Pb	≤ 0.000025	Pu	Trace
Al	≤ 0.00004	Np	Trace
Fe	0.00025	TRE(1)	0.0058

Trace - Mn, Mg

Ci/Gal			
Sr-90	0.34	Pm-147	22
Ce-144	0.45	Sm-151	0.6

Temp.	Ambient
SpG	0.79
pH	-
Btu/Hr/Gal	0.03
Vol	-
Flow	300

(2) 1CX

M	
HNO_3	0.214
Temp.	Ambient
SpG	1.01
pH	0.67
Btu/Hr/Gal	0.0
Vol	-
Flow	60

(3) 1CS

M	
TBP	0.20
HD2EHP	0.19
NaD2EHP	0.11
NPH	Diluent
Temp.	Ambient
SpG	0.79
pH	-
Btu/Hr/Gal	Negligible
Vol	-
Flow	60

(4) 1CP

M			
H^+	0.1	Ce	0.00011
Na	0.07	Pm	2.1×10^{-6}
Ca	0.0125	Am	4.6×10^{-8}
Pb	≤0.00013	Sm	3.6×10^{-5}
NO_3	0.214	Pu	Negligible
Sr	0.000088	Np	5.7×10^{-6}

Trace - Mn, Mg, Fe, Al

Ci/Gal	
Sr-90	1.7
Ce-144	0.0017
Pm-147	1.2
Sm-151	0.0031
Temp.	Ambient
SpG	1.01
pH	1.0
Btu/Hr/Gal	0.04
Flow	60

(1) Excludes Pm, Sm, and Ce

9313022.1579

TABLE 25 (Cont.)

(5) 1CW

	M		
Fe	<0.000029	Pm	0.000034
Al	<0.000005	Am	1.3×10^{-7}
D2EHPA	0.3	Sm	0.00058
TBP	0.2	TRE(1)	0.0048
NPH	Diluent	Pu	Negligible
Ce	0.00179	Np	3.2×10^{-7}

Trace - Ca

	Ci/Gal
Ce-144	0.27
Pm-147	18.6
Sm-151	0.50

Temp.	Ambient
SpG	0.79
pH	-
Btu/Hr/Gal	0.03

Vol - Accumulate flow of 360 into 1600-gallon batches.

Flow Batch

(6) TRE Strip

	M
HNO_3	2.0
Temp.	Ambient
SpG	1.12
pH	-
Btu/Hr/Gal	0.0

Vol - Gal 1300

Flow - Strip three 1600-gallon batches with one 1300-gallon batch of strip.

(7) TRE Product

	M
H^+	1.6
Fe	<0.00096
Al	<0.00017
NO_3	1.7
Ce	0.0067
Pm	0.000127
Am	4.9×10^{-6}
Sm	0.0022
TRE(1)	0.018
Pu	Negligible
Np	Trace

Trace - Ca

	Ci/Gal
Ce-144	1.0
Pm-147	69
Sm-151	1.8

Temp.	Ambient
SpG	1.12
pH	-
Btu/Hr/Gal	0.11
Vol - Gal	1300

Flow - One batch per three 1600-gallon batches 1CW

(8) Acid Kill

	M
Sugar	1.4
Temp.	Ambient
SpG	1.5
pH	-
Btu/Hr/Gal	0.0
Vol - Gal	36

Flow - One batch per TRE Product batch

TABLE 25 (Cont.)

(9) Concentrated Product TRE Storage

	M
H^+	1.0
Fe	<0.009
Al	<0.0015
NO_3	4.0
Ce	0.23
Pm	0.0043
Am	1.7×10^{-4}
Sm	0.074
TRE(1)	0.615

	Ci/Gal
Ce-144	34
Pm-147	240
Sm-151	61

Temp.	Ambient
SpG	1.39
pH	-
Btu/Hr/Gal	3.7
Vol - Gal	37

Flow - One batch per TRE Product batch

Conc. Factor 34

(10) 10X

	M
NaOH	1.0
Na_2 Tartrate	0.1

Temp.	Ambient
SpG	1.1
pH	-
Btu/Hr/Gal	0.0
Vol - Gal	1600

Flow - One batch per 1600-gallon 1CW batch

(11) 10W

	M
Na	0.90
Tartrate	0.1
OH	0.60
NO_3	0.09
Pu	2.01×10^{-7}
Np	2.2×10^{-7}
TRE(1)	0.0002
Am	6.4×10^{-10}

Trace - Inert Metals

Temp.	Ambient
SpG	1.1
pH	-
Btu/Hr/Gal	Negligible
Vol - Gal	1600

Flow - One batch per 1600-gallon 1CW batch

(12) 10B

	M
HNO_3	12.2

Temp.	Ambient
SpG	1.35
pH	-
Btu/Hr/Gal	0.0
Vol - Gal	24.7

Flow - One batch per 1600-gallon 1CW batch

(13) 1AX

	M
NaD2EHP	0.11
HD2EHP	0.19
TBP	0.2
NPH	Diluent

Trace - Fission Products

Temp.	Ambient
SpG	0.79
pH	-
Btu/Hr/Gal	Negligible
Vol - Gal	1600

Flow - One batch per 1600-gallon 1CW batch

93130022:159

9313022.1582

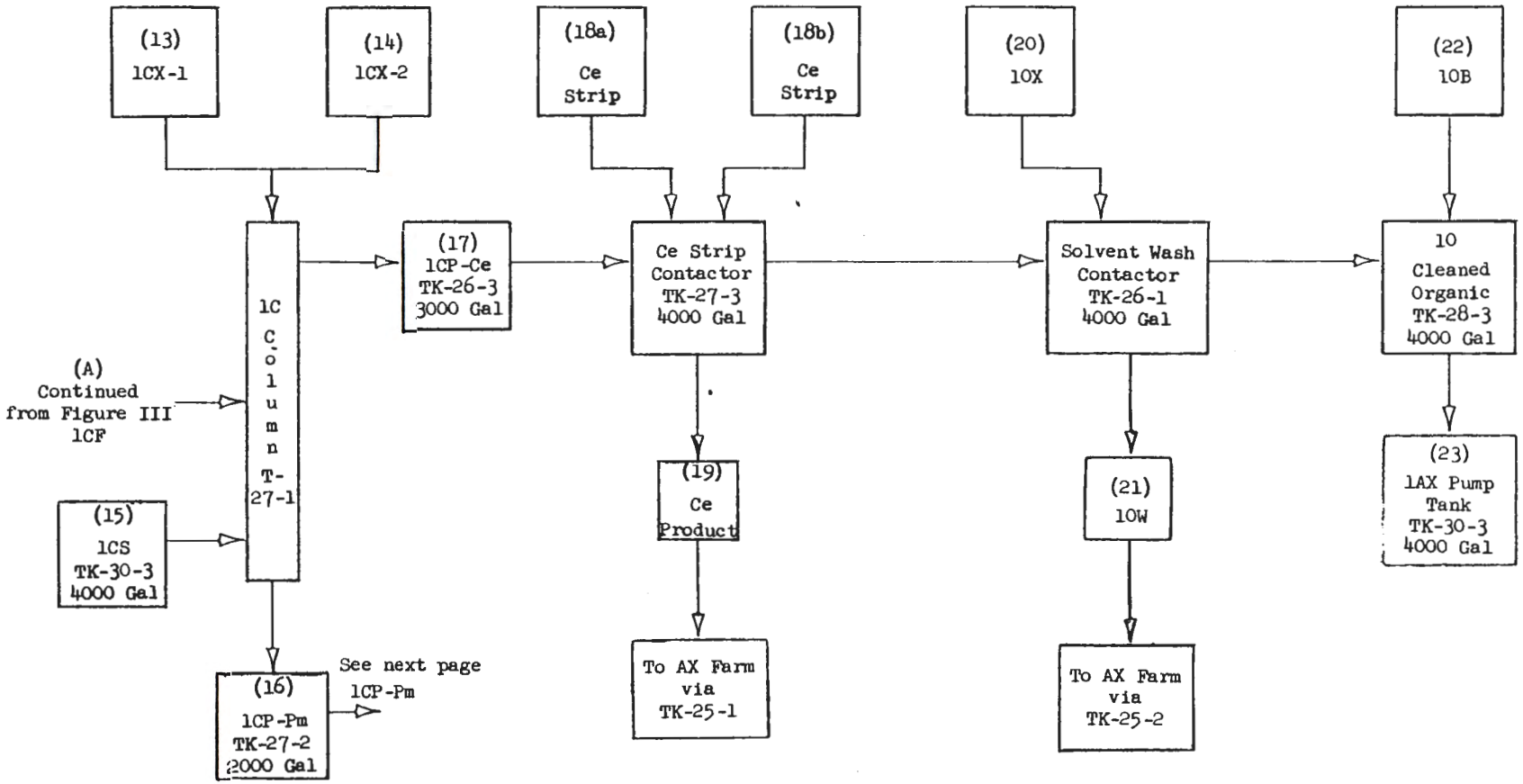

FIGURE XIV

PAW FLOWSHEET

PROMETHIUM-CERIUM SEPARATION

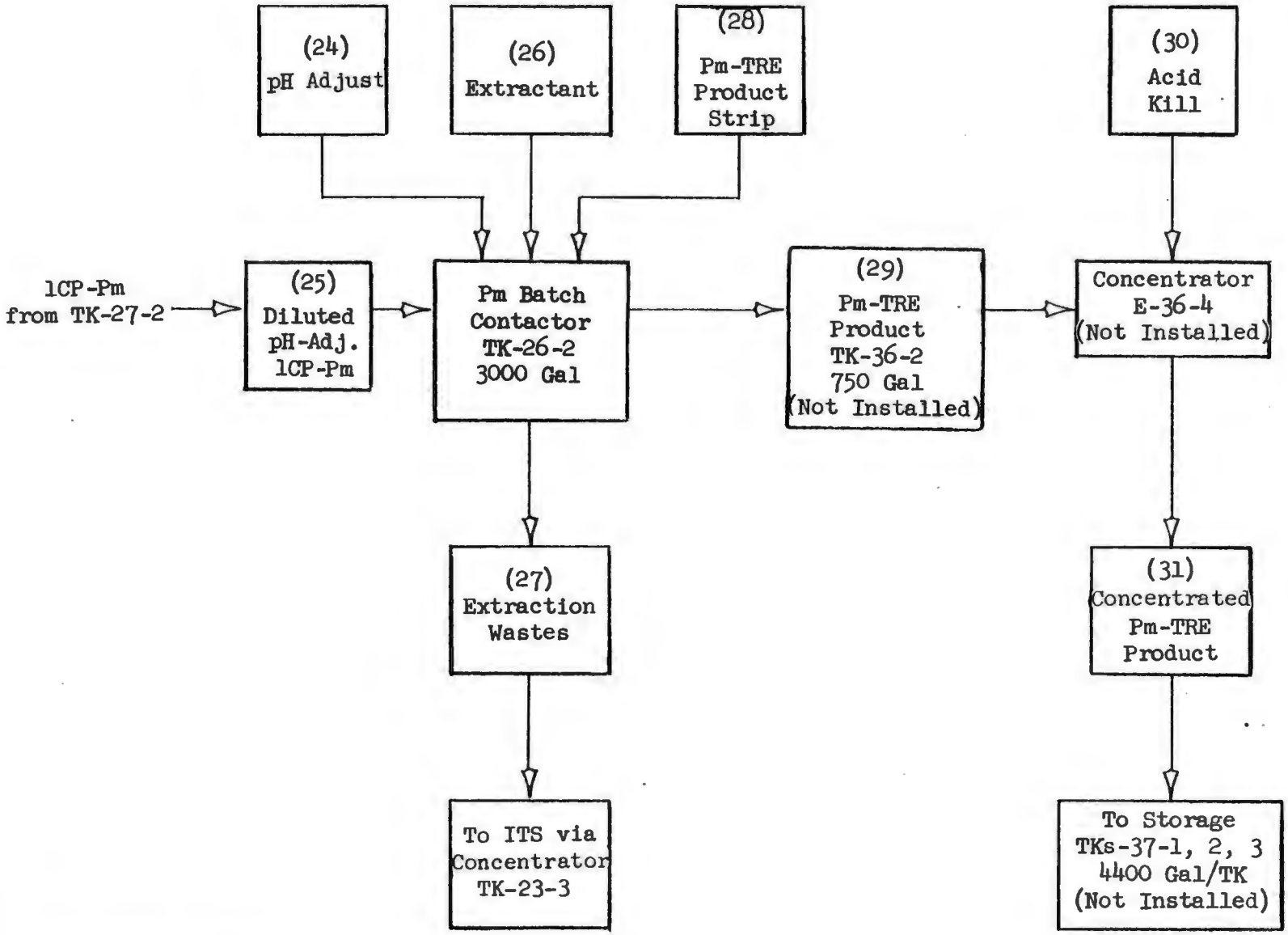

FIGURE XIV (Cont.)

[redacted]

TABLE 26

PAW FLOWSHEET

PROMETHIUM-CERIUM SEPARATION

Note: (A) Feed composition, flow rate, and concentrations similar to the 1CF stream in the PAW Solvent Extraction Flowsheet (Table 8). 1CF fission product concentrations for this flowsheet are slightly lower.

(13) 1CX-1

	M
HNO_3	2.0
$Na_2S_2O_8$	0.55
Temp.	Ambient
SpG	1.09
pH	-
Btu/Hr/Gal	0.0
Vol.	-
Flow	7.5

(14) 1CX-2

	M
HNO_3	2.0
$AgNO_3$	0.02
Temp.	Ambient
SpG	1.07
pH	-
Btu/Hr/Gal	0.0
Vol.	-
Flow	2.5

(15) 1CS

	M
TBP	0.2
HD2EHP	0.19
NaD2EHP	0.11
NPH	Diluent
Temp.	Ambient
SpG	0.79
pH	-
Btu/Hr/Gal	0.0
Vol	-
Flow	20

(1) Excludes Ce, Pm, and Sm

(16) 1CP-Pm

	M		
H^+	1.6	SO_4	0.8
Na	0.8	Sr	7.8×10^{-5}
Fe	≤0.018	Ce	0.00027
Al	≤0.0018	Pm	0.0016
Ca	0.00585	Am	8.0×10^{-6}
Mn	Trace	Sm	0.0018
Mg	Trace	Y	0.0002
Ag	0.005	TRE(1)	0.023
NO_3	0.8		

	Ci/Gal
Sr-90	≤2.2
Sr-89	≤20
Ce-144	≤105
Pm-147	850
Sm-151	2.9
Y-91	345
Temp.	Ambient
SpG	1.09
pH	-
Btu/Hr/Gal	8.4
Vol	-
Flow	10

Accumulate into 600-gallon Batches

(17) 1CP-Ce

	M		
HD2EHPA	0.3	Pm	$\leq 2.8 \times 10^{-6}$
TBP	0.2	Sm	$\leq 3.2 \times 10^{-6}$
NPH	Diluent	Y	0.00031
HNO_3	0.092	TRE(1)	$\leq 4.0 \times 10^{-5}$
Ce	0.0011	Am	Trace

	Ci/Gal		
Ce-144	420	SpG	0.79
Pm-147	≤1.5	pH	-
Sm-151	≤0.005	Btu/Hr/Gal	18
Y-91	550	Vol.	-
Temp.	Ambient	Flow	120

Accumulate into 1400-gallon Batches

[redacted]

9313022.158

TABLE 26 (Cont.)

(18a) Ce Strip

	M
HNO_3	2.1
Temp.	Ambient
SpG	1.07
pH	-
Btu/Hr/Gal	0.0
Vol - Gal	790
Flow	Batch/3 1CP-Ce Batches

(18b) Ce Strip

	M
$NaNO_2$	3.0
Temp.	Ambient
SpG	1.12
pH	-
Btu/Hr/Gal	0.0
Vol - Tal	13.9
Flow	Batch/1CP-Ce Batch

(19) Ce Product

	M
H^+	2.1
Na	0.15
NO_3	2.25
Ce	0.0053
Pm	$\leq 1.4 \times 10^{-5}$
Sm	$\leq 1.6 \times 10^{-5}$
Y	0.0003
TRE(1)	$\leq 2.0 \times 10^{-4}$

Trace - Am, Ca

	Ci/Gal
Ce-144	2100
Pm-147	≤7.5
Sm-151	≤0.025
Y-91	540

Temp.	Ambient
SpG	1.07
pH	-
Btu/Hr/Gal	64
Vol - Gal	835
Flow	Batch/3 1CP-Ce Batches

(20) 10X

	M
NaOH	1.0
Na_2 Tartrate	0.1

Temp.	Ambient
SpG	1.1
pH	-
Btu/Hr/Gal	0.0
Vol - Gal	1400
Flow	Batch/1CP-Ce Batch

(21) 10W

	M
Na	0.90
OH	0.60
Tartrate	0.1
NO_3	0.09
Y	0.00025

Trace - Ce, Pm, TRE(1)

	Ci/Gal
Y-91	450
TRE	Trace

Temp.	Ambient
SpG	1.04
pH	-
Btu/Hr/Gal	5.7
Vol - Gal	1400
Flow	Batch/1CP-Ce Batch

(22) 10B

	M
HNO_3	12.2

Temp.	Ambient
SpG	1.35
pH	-
Btu/Hr/Gal	0.0
Vol - Gal	21.8
Flow	Batch/1CP-Ce Batch

93 3022.1585

TABLE 26 (Cont.)

(23) LAX

	M
TBP	0.2
HD2EHP	0.19
NaD2EHP	0.11
NPH	Diluent
Fiss. Prod.	Trace
Temp.	Ambient
SpG	0.79
pH	-
Btu/Hr/Gal	Negligible
Vol - Gal	1400
Flow	Batch/1CP-Ce Batch

(24) pH Adjust

	M
NaOH	1.72
Citric Acid	0.1
Temp.	Ambient
SpG	1.1
pH	-
Btu/Hr/Gal	0.0
Vol - Gal	600
Flow	Batch/1CP-Pm Batch

(26) Extractant

	M
TBP	0.2
HD2EHP	0.3
NPH	Diluent
Temp.	Ambient
SpG	0.79
pH	-
Btu/Hr/Gal	0.0
Vol - Gal	1200
Flow	Batch/1CP-Pm Batch

(25) Diluted pH Adjust - 1CP-Pm

	M		
H^+	0.00014	SO_4	0.4
Na	1.3	Citrate	0.05
Fe	≤0.0089	Sr	$\leq 3.9 \times 10^{-5}$
Al	≤0.00089	Ce	≤0.00013
Ca	0.0029	Pm	0.000815
Mn	Trace	Am	4.0×10^{-6}
Mg	Trace	Sm	0.00091
Ag	0.0025	TRE(1)	0.011
NO_3	0.45	Y	0.0001

	Ci/Gal		
Sr-90	≤1.1	Pm-147	425
Sr-89	≤9.9	Sm-151	1.5
Ce-144	52.5	Y-91	170

Temp.	Ambient
SpG	1.14
pH	3.5
Btu/Hr/Gal	4.2
Vol - Gal	1200
Flow	Batch/1CP-Pm Batch

(27) Extraction Wastes

	M		
H^+	0.0003	Sr	$\leq 3.9 \times 10^{-7}$
Na	1.2	Ce	$\leq 1.3 \times 10^{-6}$
Fe	≤0.0089	Pm	8.1×10^{-6}
Al	≤0.00089	Am	Negligible
Ca	0.000059	Sm	9.1×10^{-6}
Mn	Negligible	Y	0.000001
Mg	Trace	TRE(1)	1.1×10^{-4}
Ag	0.00125	Citrate	0.05
NO_3	0.45		
SO_4	0.4		

	Ci/Gal		
Sr-90	≤0.01	Pm-147	4.3
Sr-89	≤0.1	Sm-151	0.02
Ce-144	0.52	Y-91	1.0

Temp.	Ambient
SpG	1.11
pH	3.5
Btu/Hr/Gal	0.06
Vol - Gal	1200
Flow	Batch/1CP-Pm Batch

9313022.1504

[redacted]

TABLE 26 (Cont.)

(28) Pm-TRE Product Strip

	M
HNO_3	1.0
Temp.	Ambient
SpG	1.03
pH	-
Btu/Hr/Gal	0.0
Vol - Gal	1200
Flow	Batch/Batch 1CP-Pm

(29) Pm-TRE Product

	M		
H^+	0.915	NO_3	1.0
Na	0.04	Sr	$\leq 3.9 \times 10^{-5}$
Fe	Trace	Ce	≤0.00013
Al	Trace	Pm	0.00080
Ca	0.0029	Am	3.9×10^{-6}
Mn	Trace	Sm	0.00089
Mg	Trace	Y	0.00002
Ag	0.00125	TRE(1)	0.011

	Ci/Gal
Sr-90	≤1.1
Sr-89	≤9.9
Ce-144	51
Pm-147	420
Sm-151	1.5
Y-91	34
Temp.	Ambient
SpG	1.03
pH	-
Btu/Hr/Gal	2.5
Vol - Gal	1200
Flow	Batch/1CP-Pm Batch

(30) Acid Kill

	M
Sugar	1.4
Temp.	Ambient
SpG	1.18
pH	-
Btu/Hr/Gal	0.0
Vol - Gal	20
Flow	Batch/1CP-Pm Batch

(31) Concentrated Pm-TRE

	M
H^+	0.5
Na	1.6
Fe	Trace
Al	Trace
Ca	0.11
Mn	Trace
Mg	Trace
Ag	0.049
NO_3	3.6
Sr	≤0.0015
Ce	≤0.0051
Pm	0.031
Am	0.00015
Sm	0.034
Y	0.00078
TRE	0.43

	Ci/Gal
Sr-90	≤43
Sr-89	≤390
Ce-144	2000
Pm-147	16000
Sm-151	57
Y-91	1300
Temp.	Ambient
SpG	1.3
pH	-
Btu/Hr/Gal	96
Vol - Gal	30.8
Flow	Batch/1CP-Pm Batch

Conc. Factor = 39

[redacted]

9313022.1529

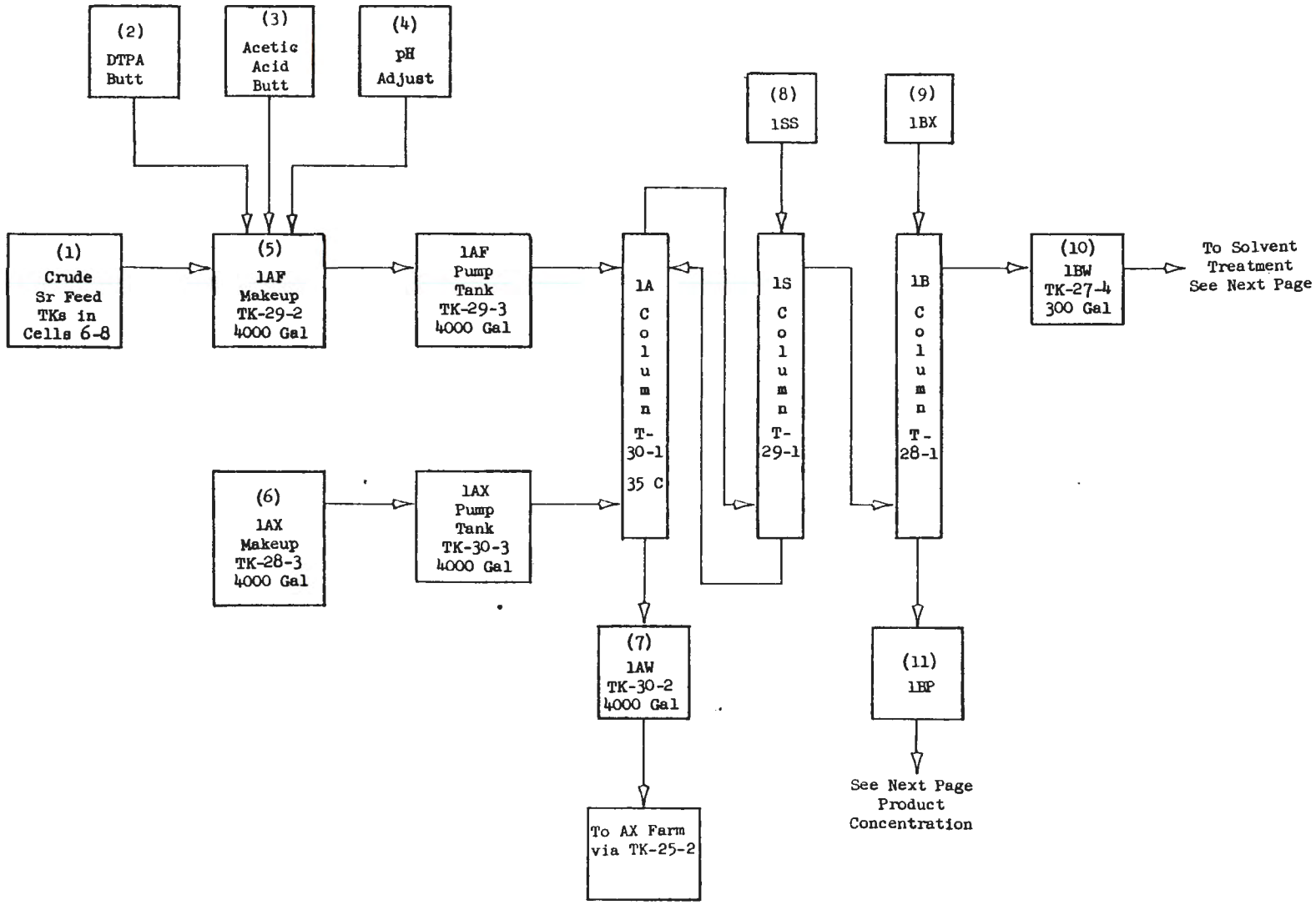

FIGURE XV

STRONTIUM PURIFICATION

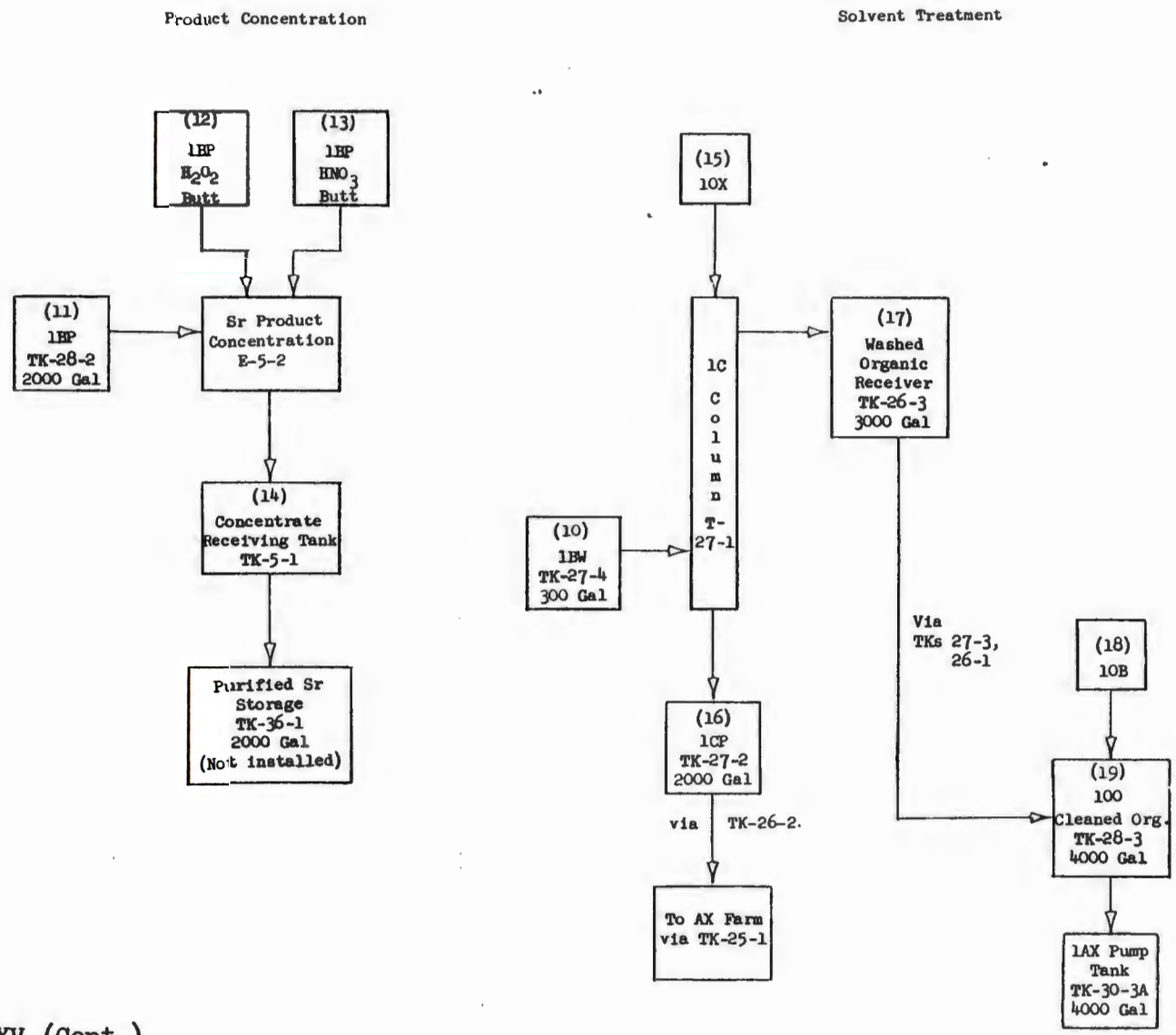

FIGURE XV (Cont.)

[redacted]

TABLE 27

STRONTIUM PURIFICATION

(1) Crude Sr Feed

	M
Na	0.20
Ca	0.012
HNO_3	0.12
Sr	0.058
Ce	0.001
TRE	0.002

	Ci/Gal
Sr-90	1600
Ce-144	390
Temp.	Ambient
SpG	1.02
pH	0.9
Btu/Hr/Gal	64
Vol - Gal	1860
Flow	62

(2) DTPA Butt

	M
DTPA	1.05
Temp.	Ambient
SpG	1.32
pH	-
Btu/Hr/Gal	0.0
Vol - Gal	243
Flow	8.1

(3) Acetic Acid Butt

	M
HAc	10.0
Temp.	Ambient
SpG	1.06
pH	-
Btu/Hr/Gal	0.0
Vol - Gal	708
Flow	23.6

(4) pH Adjust

	M
NaOH	19.0
Temp.	Ambient
SpG	1.53
pH	-
Btu/Hr/Gal	0.0
Vol - Gal	204
Flow	6.8

(5) 1AF

	M
Na	1.8
Ca	0.0074
Acetate	2.4
Free DTPA	0.084
Sr	0.036
Ce	0.00062
TRE	0.0012

	Ci/Gal
Sr-90	986
Ce-144	243
Temp.	35 ± 5 C entry to column
SpG	1.2
pH	4.9
Btu/Hr/Gal	39
Vol - Gal	3000
Flow	100 = 250 GPH

(6) 1AX

	M
D2EHPA	0.3
TBP	0.2
NPH	Diluent
Temp.	35 ± 5 C entry to column
SpG	0.79
pH	-
Btu/Hr/Gal	Negligible
Vol - Gal	-
Flow	190

(7) 1AW

	M
Na	1.05
Citrate	0.076
Acetate	1.5
Free DTPA	0.075
Sr	0.001
Ce	0.00039
TRE	0.00079

	Ci/Gal
Sr-90	27.4
Ce-144	153
Temp.	Ambient
SpG	1.15
pH	4.7
Btu/Hr/Gal	4.2
Vol - Gal	-
Flow	156

[redacted]

TABLE 27 (Cont.)

(8) 1SS

	M
Citric Acid	0.21
DTPA	0.06
Temp.	Ambient
SpG	1.04
pH	3.4
Btu/Hr/Gal	0.0
Vol - Gal	-
Flow	56

(9) 1BX

	M
Citric Acid	1.0
Temp.	Ambient
SpG	1.1
pH	1.45
Btu/Hr/Gal	0.0
Vol - Gal	-
Flow	46

(10) 1BW

	M
TBP	0.2
D2EHPA	0.3
NPH	Diluent
Ca	0.004
Sr	0.0003
	Ci/Gal
Sr-90	8.2
Temp.	Ambient
SpG	0.79
pH	-
Btu/Hr/Gal	0.3
Vol - Gal	Accumulate in 1600-Gal batches in TK-27-2 for wash.
Flow	190

(12) 1BP - H_2O_2 Butt

	M
H_2O_2	3.7
Temp.	Ambient
SpG	1.01
pH	-
Btu/Hr/Gal	0.0
Vol - Gal	-
Flow	25.2

(11) 1BP

	M
Citrate	1.0
Ca	0.0005
Na	0.042
Sr	0.076
	Ci/Gal
Sr-90	2080
Temp.	Ambient
SpG	1.02
pH	2.2
Btu/Hr/Gal	73
Vol - Gal	-
Flow	46

(13) 1BP - HNO_3 Butt

	M
HNO_3	12.2
Temp.	Ambient
SpG	1.35
pH	-
Btu/Hr/Gal	0.0
Vol - Gal	-
Flow	2.3

(14) Concentrated 1BP

	M
Sr	0.138
Ca	1.0×10^{-3}
Na	0.076
H^+	0.2
	Ci/Gal
Sr-90	3780
Ce-144	10
Temp.	Ambient
SpG	1.07
pH	0.7
Btu/Hr/Gal	132
Vol - Gal	-
Flow	25.4

9313022.1594

TABLE 27 (Cont.)

(15) 10X

	M
NaOH	1.4
Na_2 Tartrate	0.1
Temp.	Ambient
SpG	1.1
pH	-
Btu/Hr/Gal	0.0
Vol - Gal	-
Flow	95

(16) 1CP

	M
Ca	0.008
Sr	0.0006
Na	1.0
OH	0.7
Tartrate	0.1
	Ci/Gal
Sr-90	16
Temp.	Ambient
SpG	1.05
pH	-
Btu/Hr/Gal	0.6
Vol - Gal	-
Flow	95

(17) Washed Organic

	M
TBP	0.2
NaD EHP	0.3
NPH	Diluent
Temp.	Ambient
SpG	0.79
pH	-
Btu/Hr/Gal	Negligible
Vol - Gal	-
Flow	190

(18) 10B

	M
HNO_3	12.2
Temp.	Ambient
SpG	1.35
pH	-
Btu/Hr/Gal	0.0
Vol - Gal	49.2/2000-Gal washed organic

(19) 1AX

	M
TBP	0.2
HD2EHP	0.3
NPH	Diluent
Trace - Sr, TRE	
Temp.	Ambient
SpG	0.79
pH	-
Btu/Hr/Gal	Negligible
Vol - Gal	2000
Flow	190

9313022.1592

TABLE 28

HIGH-LEVEL SOLIDIFIABLE WASTE COMPOSITIONS AND GENERATION RATES

Cell 23 Concentrate

	M		M
Na	3.6	CO_3	0.098
Pb	0.022	NO_3	2.26
Fe	0.205	SO_4	1.14
Al	0.240	PO_3	0.023
Ni	0.0074	SiO_3	0.0087
Cr	0.0036	OH	0.379
Mn	0.0054	Cl	Trace
Mg	Trace	NTA	0.016
Ce	0.010	AcOH	0.072
NH_4	0.0024	HEDTA	0.00065
U	0.0030	Tartrate	0.0087
Pm	7.47×10^{-6}		
Sr-90	1.46 Ci/Gal		
Ce-144	0.59 Ci/Gal		
Cs-137	0.08 Ci/Gal		
Pm-147	10.8 Ci/Gal		
Temp.	Ambient		
SpG	1.30		
pH	>8		
Btu/Hr/Gal	0.07		

Maximum instantaneous flow rate = 11 gpm

1XW PSN

	M
Na	5.15
CO_3	0.73
NO_3	0.52
NO_2	2.78
SO_4	0.14
PO_3	0.013
Cl	0.078
Cs-137	<0.07 Ci/Gal
Temp.	Ambient
SpG	1.25
pH	10-11
Btu/Hr/Gal	<0.005

Maximum instantaneous flow rate = 50 gpm

9313022.1590

TABLE 28 (Cont.)

1XW - PSS	M	1XW - RSN	M
Na	3.8	Na	4.71
AlO_2	0.046	AlO_2	0.84
CO_3	0.71	CO_3	0.40
NO_3	0.92	NO_3	2.62
NO_2	0.47	NO_2	0.36
SO_4	0.37	SO_4	0.03
PO_3	0.031	OH	0.1
OH	0.078	Cs-137	<0.01 Ci/gal
Cs-137	<0.01 Ci/gal		
Temp.	Ambient	Temp.	Ambient
SpG	1.16	SpG	1.25
pH	10-13	pH	<10-13
Btu/Hr/Gal	0.0004	Btu/Hr/Gal	0.0004

Maximum instantaneous flow rate = 50 gpm

Maximum instantaneous flow rate = 50 gpm

AR-Vault Sludge Solids Waste

	M		M
Na	0.075	SiO_3	0.001
Fe	0.023	AlO_2	0.027
Ni	0.00085	NO_3	0.26
Cr	0.00041	SO_4	0.0020
Ca	0.0019	PO_4	0.00031
Mn	0.00063	Cl	0.00001
Mg	Trace	OH	0.001

Solids: 5 - 35% - Silicates, Phosphates, Sulfates

Fission Products - Ci/gal - Sr-90, 0-20; Ce-144, 0-10; Pm-147 - 0-30

Temperature - Ambient SpG - 1.0 - 1.3
pH >8 Btu/Hr/Gal - <0.1

Maximum instantaneous flow rate = 75 gpm (routed to A or AX Farm)

9313022.1504

TABLE 28 (Cont.)

	Years	Generation Rate, Gal x 10^{-3} per Year	Waste Volumes Processed Total Volumes, Gal x 10^{-3} Years	Initial	Solidified
B-Plant Salt Wastes					
a. 1XW - Supernates	68-73	5,500	68-80	43,000	8,500
	74-80	380			
b. Acidified Sludges and 1X Column Wash Wastes	68-73	1,200			
	74-80	18			

9313022.1591

TABLE 29

WASTE FRACTIONIZATION - LOW- AND INTERMEDIATE-LEVEL WASTE GENERATION RATE

	Stream	Disposal Site	Average Annual Generation Rate, Gal x 10^{-3} FY 68-73	74-80	68-80	Total Volume Gal x 10^{-3} FY 68-80
	B-Plant					
1.	Process Steam Condensate	Crib 216-B-55	15,000 - 10,000	2,000 - 1,000	8,000 - 5,000	104,000 - 67,000
2.	Process Condensate	Crib 216-B-12	4,000 - 2,900	120 - 110	1,900 - 1,400	25,000 - 18,000
3.	Cooling Water and Chemical Sewer	Swamp B-Plant	900,000 - 400,000	500,000 - 300,000	685,000 - 346,000	8,900,000 - 4,500,000
	AR-Vault					
	Cooling Water and Steam Condensate	Swamp Gable Mt.	90,000 - 50,000	0(1) 0	42,000 - 23,000	540,000 - 300,000
	SR Vault					
	Cooling Water and Steam Condensate	Swamp Redox				10,000(2) 5,000

(1) At this time there are no activities planned in the AR Vault which will generate significant quantities of low-level wastes to the Gable Mountain Swamp.

(2) This waste is expected to be generated in FY-1971 and 72.

9313022.1596

Date Received: 5/14/93 DS

INFORMATION RELEASE REQUEST

Reference: WHC-CM-3-4

Complete for all Types of Release

Purpose

- [] Speech or Presentation
  - [] Full Paper
  - [] Summary
  - [] Abstract
  - [] Visual Aid
  - (Check only one suffix)
- [] Speakers Bureau
- [] Poster Session
- [] Videotape
- [X] Reference
- [] Technical Report
- [] Thesis or Dissertation
- [] Manual
- [] Brochure/Flier
- [] Software/Database
- [] Controlled Document
- [] Other

ID Number (include revision, volume, etc.): ISO-986

List attachments.

Date Release Required: May 21, 1993

Title: B-Plant Phase III Flowsheets

Unclassified Category: UC-

Impact Level: 4

New or novel (patentable) subject matter? [X] No [] Yes
If "Yes", has disclosure been submitted by WHC or other company?
[] No [] Yes Disclosure No(s).

Information received from others in confidence, such as proprietary data, trade secrets, and/or inventions?
[X] No [] Yes (Identify)

Copyrights? [X] No [] Yes
If "Yes", has written permission been granted?
[] No [] Yes (Attach Permission)

Trademarks?
[X] No [] Yes (Identify)

Complete for Speech or Presentation

Title of Conference or Meeting: NA

Group or Society Sponsoring: NA

Date(s) of Conference or Meeting: NA

City/State:

Will proceedings be published? [] Yes [] No
Will material be handed out? [] Yes [] No

Title of Journal: NA

CHECKLIST FOR SIGNATORIES

Review Required per WHC-CM-3-4	Yes	No	Reviewer - Signature Indicates Approval: Name (printed) / Signature / Date
Classification/Unclassified Controlled Nuclear Information	[]	[X]	
Patent - General Counsel	[]	[X]	
Legal - General Counsel	[X]	[]	OGC Memo 2-4-93 M. Dolin 5/14/93
Applied Technology/Export Controlled Information or International Program	[]	[X]	
WHC Program/Project	[]	[X]	
Communications	[]	[X]	
RL Program/Project	[]	[X]	
Publication Services	[]	[X]	
Other Program/Project	[X]	[X]	

Information conforms to all applicable requirements. The above information is certified to be correct.

	Yes	No
References Available to Intended Audience	[]	[] NA
Transmit to DOE-HQ/Office of Scientific and Technical Information	[]	[] NA

Author/Requestor (Printed/Signature): L.E. Michael L. E. Michael Date: 5/6/93

Intended Audience: [] Internal [] Sponsor [X] External

Responsible Manager (Printed/Signature): E. J. See E. J. See Date: 5/6/93

INFORMATION RELEASE ADMINISTRATION APPROVAL STAMP

Stamp is required before release. Release is contingent upon resolution of mandatory comments.

INFORMATION

APPROVED FOR RELEASE OFFICIAL DOCUMENT DS Date 5/14/93

Date Cancelled | Date Disapproved

9313022.1597

ISO-986

ID Number

Lead Author	Phone 6-2530	MSIN H6-08	Other Author(s) or Requestor L. E. Michael
Project or Program	Lead Org Code		Sponsor Agency (DOE, DOT, NRC, USGS, etc.)
Editor	Phone	MSIN	DOE/HQ Program (DP, EH, EM, NE, etc.)

Mandatory Comments (Only mandatory comments are to be documented. All other comments should be made on a copy of the information submitted for review and returned to the author.)	Reviewer Name & Signature	Date	Resolution	Reviewer Name & Signature	Date

Legends/Notices/Markings (required per WHC-CM-3-4 or guidance organization.) (Reviewer initials)

	Affix Yes	Affix No		Affix Yes	Affix No
Applied Technology	[ ]	[ ]	Predecisional Information	[ ]	[ ]
Business-Sensitive Information	[ ]	[ ]	Programmatic Notice		
Computer Software Notice	[ ]	[ ]	Proprietary Information	[ ]	[ ]
Copyright License Notice	[ ]	[ ]	Purpose and Use	[ ]	[ ]
Export Controlled Information	[ ]	[ ]	Thesis/Dissertation	[ ]	[ ]
Legal Disclaimer	[✓]	[ ]	Trademark Disclaimer	[ ]	[ ]
Limited Disclosure	[ ]	[ ]	Unclassified Controlled Nuclear Information/Official Use Only	[ ]	[ ]
Patent Status	[ ]	[ ]	NOTICE	[ ]	[✓]

NA

Responsible Manager (Printed/Signature)

Additional Information

93130022.1598