OFFICE OF RIVER PROTECTION
P.O. Box 450, MSIN H6-60
Richland, Washington 99352

MAY 1 4 2019

19-ECD-0036

Ms. Alexandra K. Smith, Program Manager
Nuclear Waste Program
Washington State
Department of Ecology
3100 Port of Benton Blvd.
Richland, Washington 99354

Ms. Smith:

SUBMITTAL OF FACILITY SYSTEM DESCRIPTION DOCUMENTS

References:
1. WA7890008967, "Dangerous Waste Portion of the Hanford Facility Resource Conservation and Recovery Act Permit for the Treatment, Storage, and Disposal of Dangerous Waste, Operating Unit 10, 'Waste Treatment and Immobilization Plant.'"
2. BNI letter from V. McCain to B.T. Vance, ORP, "Submittal of System Design Descripton [sic] Change Notices for Dangerous Waste Critical Systems to the Administrative Record of Hanford Facility Resource Conservation and Recovery Act Permit," CCN: 313540, dated May 2, 2019.

This letter transmits the following updated system design descriptions for inclusion in the Administrative Record:

- *24590-HLW-3ZN-HFP-00001, HLW HFP System Design Description Change Notice to Align with the HLW PDSA* (Attachment 1)
- *24590-HLW-3ZN-HFP-00002, Evaluation of Lines and Equipment in Black Cell and Hard to Reach Areas* (Attachment 2)
- *24590-HLW-3ZN-RLD-00002, HLW RLD System Design Description Change Notice to Align with the HLW PDSA* (Attachment 3)
- *24590-HLW-3ZN-RLD-00003, Evaluation of Lines and Equipment in Black Cell and Hard to Reach Areas* (Attachment 4)
- *24590-LAW-3ZN-LFP-00004, Add Construction and Installation Certification Requirements to 24590-LAW-JZD-LFP-00001* (Attachment 5)
- *24590-LAW-3ZN-LOP-00011, Incorporate Ecology Comments for DWP Requirements* (Attachment 6)

- *24590-LAW-3ZN-LOP-00012, Update LOP SDD to Include Draft DSACP Content, Which Has Been Preauthorized for Early Procurement by the Customer* (Attachment 7)
- *24590-LAW-3ZN-RLD-00009, Update RLD SDD to Correct Language for Coaxial Pipelines Provision Supporting Testing* (Attachment 8)
- *24590-WTP-3ZN-ASX-00004, Incorporation of Work Off Items into the WTP ASX SDD 24590-WTP-JZD-ASX-00001 Rev 1* (Attachment 9).

These system design descriptions are being submitted to the Washington State Department of Ecology to replace earlier versions of system descriptions that were incorporated into the Dangerous Waste Permit Administrative Record.

If you have any questions, please contact Gae M. Neath, Environmental Compliance Division, (509) 376-7828.

Glyn D. Trenchard, Assistant Manager
Technical and Regulatory Support

ECD:GMN

Attachments: (9)

cc w/attachs:
D. Casey, BNI
V. Lagen, BNI
R. Landon, BNI
V. McCain, BNI
D. Yasek, BNI
J. Cantu, Ecology
A.S. Carlson, Ecology (5 hard copies)
M.E. Jones, Ecology
J.K. Perry, MSA
A.C. McKarns, RL
P.M. Pak, RL
J. Atwood, YN
D. Rowland, YN
Administrative Record
BNI Correspondence
Environmental Portal

cc w/o attachs:
M. Johnson, CTUIR
S.L. Dahl, Ecology
D. McDonald, Ecology
G.P. Bohnee, NPT
K. Niles, Oregon Energy
R. Longoria, Acting YN

Attachment 1
19-ECD-0036
(122 Pages Excluding Cover Sheet)

24590-HLW-3ZN-HFP-00001

HLW HFP System Design Description Change Notice
to Align with the HLW PDSA

Issued by
RPP-WTP PDC

System Design Description Change Notice

CHANGE DOCUMENT NO. 24590-HLW-3ZN-HFP-00001

JOB NO.	TITLE FOR CHANGE NOTICE
24590	HLW HFP System Design Description Change Notice to Align with the HLW PDSA

DOCUMENT NUMBER	REV	DOCUMENT NUMBER	REV
24590-HLW-3ZD-HFP-00001	0		

PART OF DESIGN CHANGE PACKAGE (DCP)? ☐ Yes ☒ No

Justification for no DCP: Impacted SSC has not been turned over to the Plant Management organization.

INCORPORATES AN EIE? ☐ Yes ☒ No If yes, list EIEs:

JUSTIFICATION FOR CHANGE

The requirements in HLW HFP SDD are being updated to align with the current HLW PDSA, as well as other upper tier design source documents.

Supersedes Change Document ☐ Yes ☒ No

REQUIREMENTS REVIEW

Client Approval Required ☐ Yes ☐ No | Interface Resolution Required * ☐ Yes ☐ No

Address any "yes" answers in the description

DESCRIPTION OF CHANGE

The requirements in the HFP SDD are being updated to align with the current HLW PDSA, as well as other upper tier design source documents. The functional analysis of the system was simplified so as not to impose restrictive requirements on the design. All existing holds in the document were removed as they were resolved by the issuance of the revised BOD and the revised HLW PDSA.

Section 4 and Appendices A, B & C of the document are on HOLD and will be updated during the next revision of this document to align with the design progress of the HLW HFP system.

The changes to the document are shown as added (underline) and deleted (~~strikethrough~~) in the provided attachment.

ORIGINATOR	CHECKER
Systems Engineering – Peter Suyderhoud Originator By: Peter Suyderhoud - pasuyder Org Name: Placed: Oct 18, 2018	Systems Engineering - Steve Cross

	Organization/Area of Responsibility	Print/Type Name	Signature	Date
Validation:	Controls & Instrumentation Design	Neal J Schertz	Approved By: Neal J. Schertz, P.E. - njschert Org Name: WTP C&I Engineering Placed: Oct 17, 2018	
Validation:	Electrical Design & AHJ	Scott Goad	Email Concurrence*	10/18/18
Validation:	Mechanical Systems Design	Sarah Barker	[signature]	10/18/18
Validation:	Plant Design	Jim McGrath	[signature]	10/17/18
Validation:	Process Engineering	Bob Hanson	APPROVED By Robert Hanson at 1:02 pm, Oct 16, 2018	
Validation:	Materials Engineering/Technology	John Julyk	Email Concurrence*	10/10/18
Validation:	Environmental Protection	Roger Landon	Email Concurrence*	10/16/18
Validation:	Nuclear Safety Engineering	Kraig Wendt	K. Wendt all NSE comments resolved	10-12-18

JOB NO.	TITLE FOR CHANGE NOTICE
24590	HLW HFP System Design Description Change Notice to Align with the HLW PDSA

Validation:	Radiological Engineering	Robert English	Email Concurrence*	10/16/18
	Organization/Area of Responsibility	*Print/Type Name*	*Signature*	*Date*
Validation:	Operations Requirement Document	Dan Rovira	Email Concurrence*	10/15/18
	Organization/Area of Responsibility	*Print/Type Name*	*Signature*	*Date*
Validation:	Quality Assurance	Greg Butt	Email Concurrence*	10/16/18
	Organization/Area of Responsibility	*Print/Type Name*	*Signature*	*Date*
Concurrence:	N/A	N/A		
	Title	*Print/Type Name*	*Signature*	*Date*
Concurrence:	Manager of Engineering and Design Authority	Ian Milgate	for I Milgate	10/18/18
	Title	*Print/Type Name*	*Signature*	*Date*
Approval:	Systems Engineering Manager	Sarah Barker		10/18/18
	Title	*Print/Type Name*	*Signature*	*Date*

*Email concurrence for validation emails can be found on 24590-HLW-EDR-SYSE-18-0007

1.2 Limitations and Scope

Engineers are expected to be able to use the requirements in Section 3 of this document as input for design development without recourse to the upper-tier source documents or searches of the Technical Requirements Management System supported by the Technical Requirements Search Application ~~(TRSA)~~. Design engineers are still required to ensure the requirements contained with the discipline/functional standards incorporated by reference in Section 3 are followed. These documents contain additional criteria based on applications of external codes/standards, corporate best practices, and Engineering management expectations for a consistent approach to design.

1.5 Acronyms and System Designators

Acronyms

~~A, I, R, T~~	~~analysis, inspection, demonstration, test~~
ASD	adjustable speed drive
CLW	co-located worker
~~DBE~~	~~design basis event~~
~~DVR~~	~~design verification report~~
DWP	Dangerous Waste Permit
~~EQP~~	~~equipment qualification package~~
~~FCR~~	~~facility control room~~
ICN	integrated control network
~~MCR~~	~~main control room~~
MIC	microbial induced corrosion
~~MR~~	~~material requisition~~
NACE	National Association of Corrosion Engineers
NPH	natural phenomena hazard
~~NSE~~	~~Nuclear Safety Engineering~~
ORP	Office of River Protection
PSV	pressure safety valve
RCRA	Resource Conservation and Recovery Act of 1976
RGM	revised ground motion
~~R&T~~	~~Research and Technology~~
~~ROIN~~	~~requirement object identification number~~
SBS	submerged bed scrubber
SC-#	seismic category-#
~~SFC~~	~~single failure criteria~~
~~SSRS~~	~~safety system requirement specifications~~
~~SQR~~	~~supplier quality representative~~
~~SUB~~	~~subcontractor~~
TSR	technical safety requirement
~~UPE~~	~~Uninterruptible Power Electrical System~~
~~UPS~~	~~Uninterruptible Power Supply System~~
WAC	Washington Administrative Code
~~WG~~	~~water gauge~~

WSGM WTP site-specific ground motion
~~ZOI zone of influence~~

System Designators

HOP HLW melter offgas ~~processing~~ treatment process system
UPE uninterruptible power electrical system

Figure 2–3 HCP and HFP Functional Block Diagram

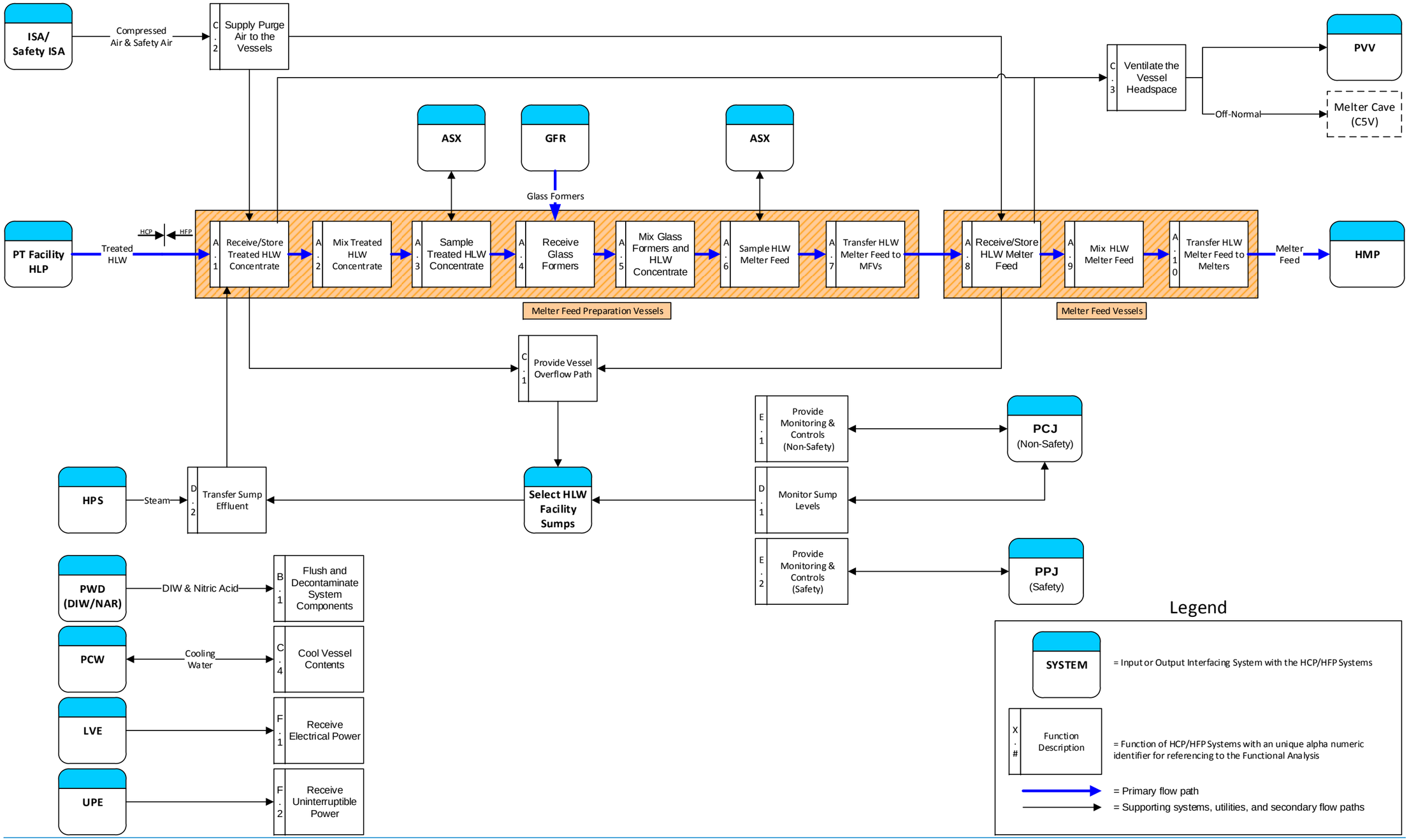

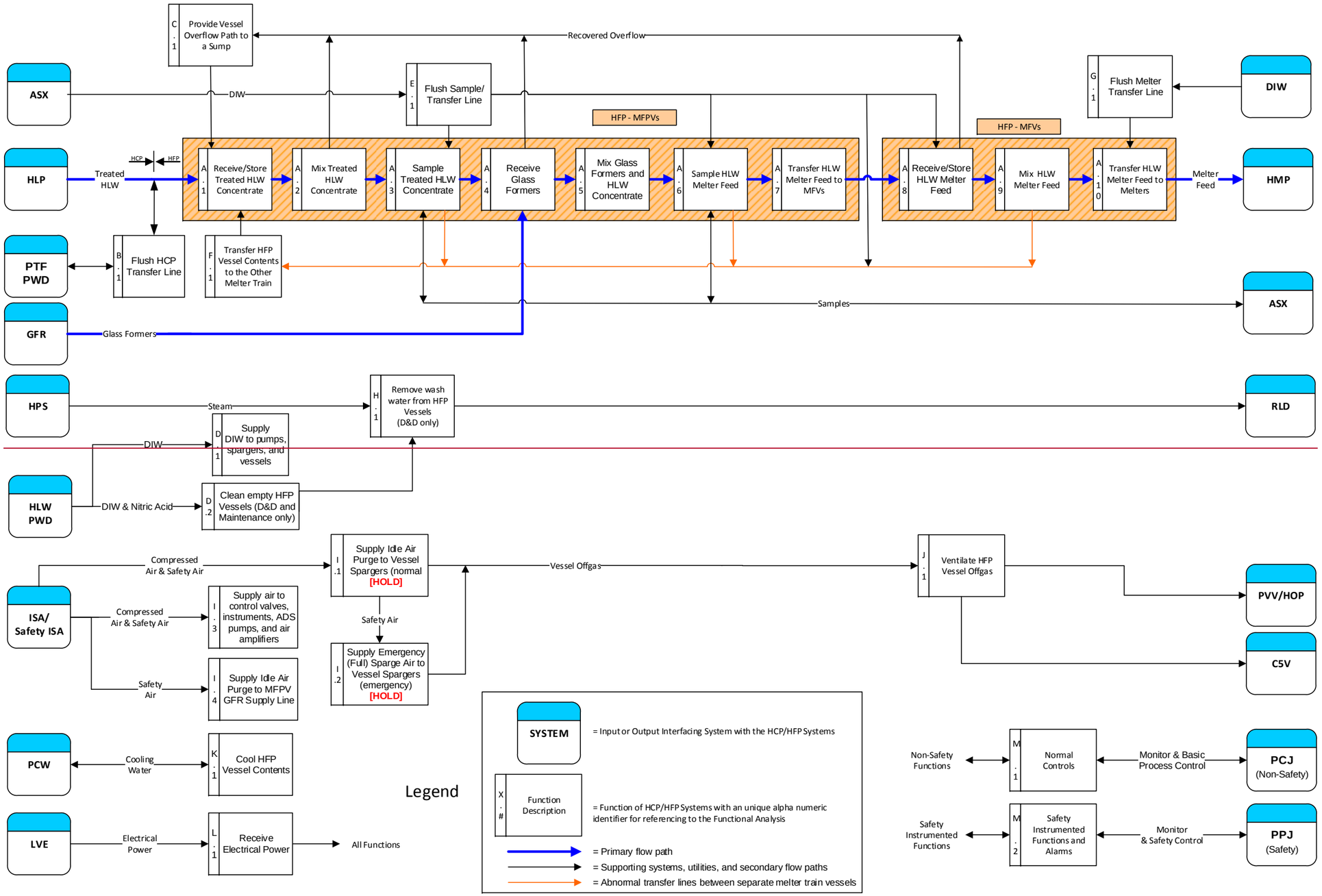
C.1 Provide Vessel Overflow Path to a Sump
Recovered Overflow
ASX
DIW
E.1 Flush Sample/ Transfer Line
G.1 Flush Melter Transfer Line
DIW
HFP - MFPVs
HFP - MFVs
HLP
Treated HLW
HCP
HFP
A.1 Receive/Store Treated HLW Concentrate
A.2 Mix Treated HLW Concentrate
A.3 Sample Treated HLW Concentrate
A.4 Receive Glass Formers
A.5 Mix Glass Formers and HLW Concentrate
A.6 Sample HLW Melter Feed
A.7 Transfer HLW Melter Feed to MFVs
A.8 Receive/Store HLW Melter Feed
A.9 Mix HLW Melter Feed
A.10 Transfer HLW Melter Feed to Melters
Melter Feed
HMP
PTF PWD
B.1 Flush HCP Transfer Line
F.1 Transfer HFP Vessel Contents to the Other Melter Train
Samples
ASX
GFR
Glass Formers
HPS
Steam
H.1 Remove wash water from HFP Vessels (D&D only)
RLD
DIW
D.1 Supply DIW to pumps, spargers, and vessels
HLW PWD
DIW & Nitric Acid
D.2 Clean empty HFP Vessels (D&D and Maintenance only)
Compressed Air & Safety Air
I.1 Supply Idle Air Purge to Vessel Spargers (normal [HOLD]
Vessel Offgas
J.1 Ventilate HFP Vessel Offgas
ISA/ Safety ISA
Compressed Air & Safety Air
I.3 Supply air to control valves, instruments, ADS pumps, and air amplifiers
Safety Air
I.2 Supply Emergency (Full) Sparge Air to Vessel Spargers (emergency) [HOLD]
PVV/HOP
C5V
Safety Air
I.4 Supply Idle Air Purge to MFPV GFR Supply Line
PCW
Cooling Water
K.1 Cool HFP Vessel Contents
Legend
SYSTEM
= Input or Output Interfacing System with the HCP/HFP Systems
X.# Function Description
= Function of HCP/HFP Systems with an unique alpha numeric identifier for referencing to the Functional Analysis
= Primary flow path
= Supporting systems, utilities, and secondary flow paths
= Abnormal transfer lines between separate melter train vessels
Non-Safety Functions
M.1 Normal Controls
Monitor & Basic Process Control
PCJ (Non-Safety)
LVE
Electrical Power
L.1 Receive Electrical Power
All Functions
Safety Instrumented Functions
M.2 Safety Instrumented Functions and Alarms
Monitor & Safety Control
PPJ (Safety)

The functions included in Figure 2-3 are the primary and secondary level functions of the HCP and HFP systems. These functions are further described in Table 2–1. Where appropriate to support definition of functional and design requirements, functions have been further decomposed and additional levels of supporting functions are also described. The requirement section number provides the location of the applicable functional analysis incorporated into system requirements.

Appendix B provides a further decomposition of system functions, including initiating, terminating, and integrating events and functions.

Table 2–1 Functional Analysis and Crosswalk to Requirements

Reference	Functional Analysis Description	Requirement Section No.
A.	**Receive Waste, Glass Formers, and Prepare HLW Melter Feed for Vitrification**	**N/A**
A.1	~~[**HOLD**]~~ Receive/store treated HLW concentrate - The MFPV receives HLW concentrate from the PT Facility HLW lag storage and feed blending process system (HLP) via the HCP system piping. ~~The MFPV interfaces with the autosampling system (ASX) to sample and characterize the HLW concentrate.~~	~~3.5.1.1.1~~ 3.5.1.1.4.1 3.5.1.1.4.2 ~~3.5.3.1~~ ~~3.6.2.2~~
~~A.1.1~~	~~[**HOLD**] Receive HLW sump flows - Sumps which could contain melter feed are routed to the MFPVs (via steam ejectors through the melter train cross connection).~~	~~3.4.4.6~~
A.2	Mix treated HLW concentrate - The HLW concentrate is mixed in the MFPV ~~before transferring to the ASX, which collects a representative sample for analysis to determine the glass former recipe~~using mechanical agitators.	~~3.5.1.1.1~~ ~~3.5.2.2~~ ~~3.7.1.1.1~~ ~~3.7.1.1.2~~ 3.7.1.1.1 3.7.2.2 3.7.2.6
A.3	Sample treated HLW concentrate - The HLW concentrate is transferred from the MFPV to the ASX system for sampling ~~by the HFP sample/transfer pumps to the sampling recirculation loop where the ASX extracts a sample. The remaining concentrate returns back to the MFPV using the HFP circulation loop. The ASX uses an auto sampler to extract a representative sample for analysis in the Analytical Laboratory. Sample data is collected for each MFPV batch to ensure an adequate quantity of glass formers is added for final waste characterization to meet glass property and waste loading requirements~~.	3.4.1.1.3 3.5.3.9
~~A.3.1~~	~~[**HOLD**] Flush sample line - Demineralized water is used to flush the sample recirculation line into the MFPV via the ASX system.~~	~~3.5.3.10~~ ~~3.6.3.1~~
A.4	Receive glass formers - MFPV receives glass formers from the GFR system. ~~The proper proportions of various glass formers are prepared, mixed, moistened, added to the HLW concentrate, and mixed to prepare HLW feed material. (See A.6).~~	3.5.3.2
A.5	Mix glass formers with HLW concentrate - A mechanical agitator mixes glass formers and HLW concentrate in the MFPV to ensure data quality objectives are met in support of waste form qualification.	~~3.7.1.1.1~~ ~~3.7.1.1.2~~ 3.7.1.1.1 3.7.2.2 3.7.2.6

Table 2–1 Functional Analysis and Crosswalk to Requirements

Reference	Functional Analysis Description	Requirement Section No.
A.6	Sample HLW melter feed - Representative samples of the HLW melter feed are transferred from the MFPV to the ASX system~~ by the HFP sample/transfer pumps to the sampling recirculation loop where the ASX extracts a sample. The ASX sample is analyzed to confirm the melter feed meets glass property and waste loading requirements for each particular batch. If the melter feed is not acceptable, additional glass formers can be added and mixed to shim the batch. The shimmed batch is then resampled to ensure the final glass product will meet the acceptance criteria~~.	3.4.1.1.3 3.5.3.9
~~A.6.1~~	~~[**HOLD**] Flush sample line - Demineralized water is used to flush the sample recirculation line into the MFPV.~~	~~3.5.3.10~~ ~~3.6.3.1~~
A.7	Transfer HLW melter feed to MFVs - The HLW melter feed is transferred from the MFPV to the MFV.	3.4.1.1.1 ~~3.5.3.3~~
A.8	Receive/Store HLW melter feed – The MFV receives and stores HLW melter feed from the MFPV until it is transferred to the melter.	3.5.1.1.5.1 3.5.1.1.5.2 ~~3.5.3.3~~
A.9	Mix HLW melter Feed - The HLW melter feed is continuously mixed while being staged in the MFV before transferring to the melter for vitrification using mechanical agitators.	~~3.7.1.1.1~~ ~~3.7.1.1.2~~ 3.7.1.1.1 3.7.2.2 3.7.2.6
A.10	~~[**HOLD**]~~ Transfer HLW melter feed to melters - ~~Except for periodic line flushes,~~ HLW feed is continuously transferred from the MFV to the HMP system melter for vitrification as a continuous low volumetric rate stream via air displacement slurry (ADS) pumps.	3.4.1.1.2 ~~3.5.3.4~~ 3.9.1.2 ~~3.9.3.2.1~~
B.	~~**Prevent plugging of the PT Facility to HLW Facility transfer line**~~**Flush and Decontaminate Components**	**N/A**
B.1	Flush and decontaminate system components – The HCP/HFP system includes provisions to flush and decontaminate equipment and components to support maintenance and decommissioning~~Flush HCP transfer line – The HCP transfer line will be flushed to prevent plugging and the accumulation of detonable quantities of hydrogen. The flush water will be directed back to the PT Facility plant wash and disposal system (PWD)~~.	3.4.1.2.7 ~~3.4.4.3~~ 3.5.4.1 3.6.1.1.10 3.6.1.3.4 ~~3.6.3.1~~ ~~3.6.4.1~~
C.	~~**Prevent Liquid Uptake into the Process Vessel Vent Exhaust System (PVV)**~~**Protect and Maintain HFP System Vessels**	**N/A**
C.1	Provide vessel overflow path ~~to a sump~~ - MFPVs and MFVs (HFP vessels) are designed with an overflow path to preclude liquid uptake into the process vessel vent exhaust system (PVV) and maintain a minimum headspace volume.~~ Overflowed liquid will be directed from the HFP vessel to the respective melter cave sump.~~	3.5.1.2 3.5.1.3 3.5.1.4 ~~3.5.2.1.1~~ ~~3.5.2.1.2~~ ~~3.5.2.1.3~~
C.2	Supply purge air to the vessels – The HFP system provides air through the vessel to dilute the headspace below the hydrogen lower flammability limit (LFL).	3.5.2.8

Table 2–1 Functional Analysis and Crosswalk to Requirements

Reference	Functional Analysis Description	Requirement Section No.
C.3	Ventilate the vessel headspace – The HFP system provides a flow path sufficient to vent generated hydrogen and purge air from the vessel headspace.	3.5.2.6 3.5.2.7
C.4	Cool vessel contents – Plant cooling water from the PCW system is provided to the jackets of the HFP system vessels.	3.5.1.6
D.	**Manage Select HLW Facility Sumps**	**N/A**
D.1	Monitor Sump Levels - The HCP/HFP system provides monitoring and a leak detection system for select HLW Facility sumps.	3.10.1.5 3.10.2.6
D.2	Transfer sump effluent – The HCP/HFP system sump pumps/ejectors that operate in areas regulated as tank system or ancillary equipment secondary containment return effluent to the process.	3.5.1.5 3.9.2.1
E.	**Provide Monitoring and Controls**	**N/A**
E.1	Provide monitoring & controls (non-safety) – The PCJ system provides non-safety monitoring and controls for HFP system process equipment.	3.10.1.5 3.10.1.6 3.10.1.7 3.10.2.6 3.10.2.7 3.10.3.2 3.10.4.1
E.2	Provide monitoring & controls (safety) – The PPJ system provides safety monitoring, controls, and interlocks for HFP system process equipment.	3.10.2.1.5 3.10.2.2.1 3.10.2.2.3 3.10.2.2.5 3.10.2.2.6 3.10.2.2.7 3.10.2.2.8 3.10.2.2.9 3.10.2.2.10 3.10.2.2.11 3.10.2.2.12 3.10.2.2.13 3.10.3.1
F.	**Receive Power**	**N/A**
F.1	Receive Electrical Power – The LVE system provides low voltage power to all HFP system equipment in normal operations.	N/A
F.2	Receive Uninterruptible Power – The UPE system provides uninterruptible power for selection HFP system functions upon loss of normal power.	3.7.2.4
~~**D.**~~	~~**Supply HFP Vessels with Demineralized Water and Nitric Acid from HLW PWD and NAR**~~	~~N/A~~
~~D.1~~	~~Supply Demineralized Water – Demineralized water is provided to the pumps, spargers, and HFP vessels.~~	~~3.5.3.5~~
~~D.1.1~~	~~Demineralized water is used for priming the sample/transfer pumps to clear the pump and to initiate the pump, without waste, until the pump reaches operating capacity.~~	~~3.9.3.1.1~~

Table 2–1 Functional Analysis and Crosswalk to Requirements

Reference	Functional Analysis Description	Requirement Section No.
~~D.1.2~~	~~[**HOLD**] Demineralized water is used for flushing the spargers to prevent them from plugging.~~	~~3.8.4.1~~
~~D.1.3~~	~~Demineralized water is used for diluting the waste in the HFP vessels via the spargers or internal spray mechanisms.~~	~~3.5.3.11~~
~~D.2~~	~~Clean empty HFP vessels – HFP vessels are washed using demineralized water and nitric acid from the nitric acid reagent system (NAR), if needed, via the PWD. The washwater is transferred from the HFP vessels to the radioactive liquid waste disposal system (RLD) using the steam ejectors to support vessel decontamination and decommissioning (D&D) (see H.1). Vessel Washings during normal operations will be processed forward to the melters.~~	~~3.5.3.5~~ ~~3.5.4.1~~
~~**E.**~~	~~**Flush Sample/Transfer Lines with Demineralized Water from ASX**~~	~~N/A~~
~~E.1~~	~~[**HOLD**] Flush sample/transfer line – The HFP vessel sample loops and transfer line from the MFPV to MFV are flushed using demineralized water to prevent lines from plugging. The lines are flushed into the HFP vessels.~~	~~3.6.3.1~~ ~~3.6.4.1~~ ~~3.10.4.4~~
~~**F.**~~	~~**HFP Vessel Cross-Tie Between Melter Trains**~~	~~N/A~~
~~F.1~~	~~Transfer HFP vessel contents – The HFP vessel contents are removed and transferred to the other melter train either upon receipt of an out-of-specification batch sample analysis or to de-inventory the waste.~~	~~3.4.4.2~~
~~**G.**~~	~~**Prevent plugging of the MFV to Melter Transfer Line**~~	~~N/A~~
~~G.1~~	~~Flush melter transfer line - The transfer piping from the MFV to the melter will be flushed to prevent plugging.~~	~~3.6.3.1~~ ~~3.6.4.1~~
~~**H.**~~	~~**Remove Vessel Wash Contents**~~	~~N/A~~
~~H.1~~	~~Remove washwater from HFP vessels – Vessel washwater will be processed forward to the melters during normal operations. During vessel D&D activities, the high-pressure steam system (HPS) provides steam to the steam ejectors to remove the MFPVs and MFVs (HFP vessels) and transfers the liquid to the RLD.~~	~~3.4.4.4~~ ~~3.5.3.8~~ ~~3.5.4.1~~ ~~3.5.3.11~~
~~**I.**~~	~~**Supply HFP Vessels with Air for Purge/Sparge, Control Valves, Instruments, and Air Displacement Slurry Pumps from ISA and Safety ISA**~~	~~N/A~~
~~I.1~~	~~[**HOLD**] Supply idle air purge to vessel spargers - The sparger lines provide compressed air from the instrument service air system (ISA) to provide a trickle flow (idle air purging) during normal mixing operations. The trickle flow is provided to lower the risk of sparging line plugging and to prevent the buildup of hydrogen gas in the vessel headspace.~~	~~3.8.2.1~~ ~~3.8.3.1~~
~~I.2~~	~~[**HOLD**] Supply emergency (full) sparge air to vessel spargers – The sparger lines provide compressed air from ISA to provide emergency air sparging to mix the waste after a seismic design basis event (DBE). The emergency sparging provides agitation of the waste sufficient to preclude retention of hydrogen in the waste when normal agitation is unavailable either post-seismic DBE or maintenance.~~	~~3.8.2.1~~ ~~3.8.3.2~~
~~I.3~~	~~Supply air to control valves, instruments, air displacement slurry (ADS) pumps and air amplifiers. Air is used to supply the motive force to open/operate control valves, instruments, ADS pumps, and air amplifiers.~~	~~3.9.3.2.1~~ ~~3.11.3.1.1~~ ~~3.11.3.2.1~~

Table 2–1 Functional Analysis and Crosswalk to Requirements

Reference	Functional Analysis Description	Requirement Section No.
~~I.4~~	~~Supply idle air to purge to MFPV GFR supply line. Air is used to prevent backflow of contamination from the MFPVs to the GFR during normal operation.~~	~~3.5.3.12~~
~~**J.**~~	~~**Ventilate Vessel**~~	~~N/A~~
~~J.1~~	~~Ventilate HFP vessel offgas – Negative headspace pressure is maintained in the HFP vessels by the PVV and HLW melter offgas treatment process system (HOP). The HFP vessels are vented by air amplifiers or an overflow feature into the melter cave where the headspace gas is removed by the C5 ventilation system when HOP/PVV is unavailable.~~	~~3.5.3.7.1~~
~~J.1.1~~	~~Demisters are used to prevent excessive moisture and aerosols from being carried out of the HFP vessels into the HOP high-efficiency particulate air (HEPA) filters.~~	~~3.11.1.1~~
~~**K.**~~	~~**Cool Vessel**~~	~~N/A~~
~~K.1~~	~~Cool HFP vessel contents – HFP vessels are cooled using water jackets and chilled water from the plant cooling water system (PCW) to remove heat generated by mixing and radioactive decay.~~	~~3.5.3.6~~
~~**L.**~~	~~**Electrical Power**~~	~~N/A~~
~~L.1~~	~~Receive Electrical Power – The low voltage electrical (480/208/120 V) system (LVE) provides electrical power to the HFP equipment and instruments.~~	~~N/A~~
~~**M.**~~	~~**Support Monitoring, Control, and Communication Functions**~~	~~N/A~~
~~M.1~~	~~Process Control System (PCJ) – Normal Controls~~	~~3.10.3.2~~
~~M.1.1~~	~~The HCP / HFP process shall be monitored and controlled by the PCJ system and shall include the following main functions:~~ ~~a) Control incoming PT Facility waste transfers and melter feed (including line flushes)~~ ~~a) Monitor vessel level, temperature and pressures~~ ~~b) Control operation of valves, pumps, ejectors, agitators, sampling and cooling systems~~ ~~c) Monitor device status (valve, pumps etc.)~~ ~~d) Monitor sample line flow~~ ~~e) [**HOLD**] Monitor sparge flows~~ ~~f) Monitor cooling water flow~~ ~~g) Automatic flushing control~~	~~a) 3.5.1.1.1~~ ~~3.10.4.1~~ ~~b) 3.5.1.1.1~~ ~~3.5.1.1.2~~ ~~3.5.1.1.3~~ ~~3.10.1.1.1~~ ~~3.10.1.1.2~~ ~~3.10.1.1.3~~ ~~3.10.4.1~~ ~~c) 3.5.1.1.2~~ ~~3.10.2.2.4~~ ~~3.10.4.1~~ ~~d) 3.10.4.1~~ ~~e) 3.10.1.4.1~~ ~~3.10.4.1~~ ~~f) 3.8.3.1~~ ~~3.10.1.3.1~~ ~~3.10.4.1~~ ~~g) 3.5.3.6~~ ~~3.10.4.1~~ ~~h) 3.10.4.4~~

Table 2–1 Functional Analysis and Crosswalk to Requirements

Reference	Functional Analysis Description	Requirement Section No.
~~M.1.2~~	~~The PCJ system shall allow the remote monitoring and control of the HCP / HFP systems from the HLW Facility Control Room (FCR) and Main Control Room (MCR) in the PT Facility.~~	~~3.10.4.1~~
~~M.2~~	~~Programmable protection system PPJ – Safety Instrumented Functions and Alarms~~	~~3.10.2.3~~ ~~3.10.2.5~~ ~~3.10.3.1~~
~~M.2.1~~	~~Isolate valves for transferring and sampling – The PPJ provides automatic safety termination of transfers from the PT Facility to the MFPVs, from the MFVs to the melters, from HFP vessels to ASX samplers. Position indication needs to be provided by the monitoring capability on both PPJ and PCJ systems.~~	~~3.10.2.2.3~~ ~~3.10.1.4.2~~ ~~3.10.2.2.4~~ ~~3.10.2.2.13.10.4.2~~ ~~3.10.4.4~~
~~M.2.2~~	~~[**HOLD**] Isolate sample/transfer pumps - The PPJ stops the sample/transfer pumps for safety interlocks.~~	~~3.10.2.2.3~~ ~~3.10.2.2.4~~ ~~3.10.4.2~~
~~M.2.3~~	~~[**HOLD**] Isolate air displacement slurry (ADS) pumps – The PPJ stops the ADS pumps for safety interlocks.~~	~~3.10.1.4.2~~ ~~3.10.4.2~~
~~M.2.4~~	~~[**HOLD**] Switch from idle air purge mode to emergency sparge mode – The PPJ controls the airflow through the sparge tubes and switches from idle air purge mode to emergency sparge mode after the mechanical agitator speed or power drops below setpoint values.~~	~~3.10.1.2.3~~ ~~3.10.1.3.2~~ ~~3.10.4.2~~
~~M.2.5~~	~~[**HOLD**] Measure air sparger flow rate – For emergency sparging, the PPJ provides monitoring of the volume rate of air flowing through the sparger air supply lines.~~	~~3.8.3.2~~ ~~3.10.1.2.3~~ ~~3.10.1.3.2~~ ~~3.10.1.3.3~~ ~~3.10.2.1.3~~ ~~3.10.4.2~~
~~M.2.6~~	~~Measure mechanical agitator speed – The PPJ monitors the rotational speed of the mechanical agitators to ensure adequate mixing of the waste.~~	~~3.10.1.2.1~~ ~~3.10.1.2.3~~ ~~3.10.2.1.2~~ ~~3.10.4.2~~
~~M.2.7~~	~~Measure mechanical agitator power - The PPJ monitors the motor power of the mechanical agitators to ensure agitators are operating above the minimum amperage setpoint.~~	~~3.10.1.2.2~~ ~~3.10.2.1.2~~ ~~3.10.4.2~~
~~M.2.8~~	~~[**HOLD**] Operate safety air valves for sparging – The PPJ controls the automatic operation of the safety air valves to transition from normal non-safety ISA to safety ISA when flow rates drop below the setpoint.~~	~~3.10.1.3.3~~ ~~3.10.2.1.3~~ ~~3.10.4.2~~
~~M.2.9~~	~~Measure vessel contents level - The PPJ monitors the level of the vessel contents.~~	~~3.10.1.1.3~~ ~~3.10.1.1.34~~ ~~3.10.2.2.1~~ ~~3.10.4.2~~
~~M.2.10~~	~~**[HOLD]** Operate valves for receiving glass formers - The PPJ provides automatic safety closure of the glass former feed isolation valve.~~	~~3.10.2.1.1~~ ~~3.10.2.2.2~~ ~~3.10.4.2~~

Table 2–1 Functional Analysis and Crosswalk to Requirements

Reference	Functional Analysis Description	Requirement Section No.
~~M.2.11~~	~~Operate air amplifiers – The PPJ system to receive seismic signal safety class (SC) interlock signal, which will automatically activate the air amplifiers on each HFP vessel in response to a seismic event.~~	~~3.10.2.1.4~~ ~~3.10.4.2~~ ~~3.11.2.1.1~~

3 Design Requirements

3.1 Requirements

Requirements are documented in Sections 3.4 through 3.12. Each requirement statement is accompanied by a basis discussion (as needed) and the expected means of verification. Requirements must be met in design. If a requirement stated in this document cannot be met in design, a revision to the requirement needs to be pursued, if possible, or the design must be changed to meet the requirement.

Requirements preceded by "[**HOLD**]" may only be used in support of preliminary or committed design, which shall also be issued with appropriate holds per procedure 24590-WTP-3DP-G04B-00046, *Engineering Drawings*. These requirements may not be used in support of fabrication or construction. Per Section 5.7 of 24590-WTP-3DP-G04B-00046, procurement of equipment with requirements on HOLD in the FDD/SDD may proceed in certain cases with authorization of the Manager of Production Engineering.

The following abbreviations are used to designate the selected method for verification (see 24590-WTP-3DP-G04B-00092, *System Verification*, for additional guidance concerning methods of verification):

(A) Analysis
(R) Review
(I) Inspection
(T) Test

The following abbreviations are used to designate the organization responsible for performing the verification:

(COM) Commissioning
(CON) Construction
(ENG) Engineering
~~(CON) Construction~~
(SU) Startup
~~(COM) Commissioning~~
(SUP) Supplier
~~(SUB) Subcontractor~~
~~(SQR) Supplier Quality Representative~~
~~(REC) Receiving~~

3.1.1 Risk Managed Requirements

Requirements identified in this SDD with [A] and [B] versions are provided to support the risk managed direction of the HFP SDD. A WTP executive management group is providing interpretation of each requirement and establishing a final risk managed requirement statement ([B]). The "HOLD" version of the requirement ([A]) is

sourced from design basis project documentation, providing reference to the requirement, which is expected to be changed and this is placed on hold to focus work efforts on stable requirements and allow time to validate the use of the directed requirement identified as [B].

3.2 Bases

Basis discussions are provided as needed to explain the decomposition or interpretation from the originating source requirement(s). Where a [**HOLD**] has been applied to a requirement, this section will include the basis for the [HOLD]. Where included, basis discussions provide supplementary information to help the reader understand the origin or intent of a requirement. Basis statements do not include requirements and are not to be considered as requirements.

3.3 References

The requirements include a source document reference. Each unique source document reference is bracketed separately. Requirements may include a reference to the Section 2.1, ~~Functional Description~~*System Functions/Safety Functions*, listed in parentheses following the source document~~ and ID number references~~. A complete listing of all source references is provided in Section 5.1.

3.4 General Requirements

3.4.1 Mission and Functional / Performance Requirements (Including States/Modes)

3.4.1.1 HFP Vessel Transfer Rates

3.4.1.1.1 MFPV to MFV Transfer Rate

Requirement: The HFP system shall be capable transferring MFPV content to the MFV at a transfer rate of 44 gpm. ~~The HFP system shall provide a sufficient transfer flow rate to support the 100% capacity melter throughput for glass production of 3.75 metric tons of glass(MTG)/day/melter (total of 7.5 MTG per day) for transfers from the MFPV to the MFV. [Section C.7(b)(3), No. DE-AC27-01RV14136]~~ [Section 6.3.3, ~~11.7.4,~~ BOD] (A.7)~~.~~

Basis Discussion: ~~The design throughput (processing) capabilities for the HCP and HFP systems are defined in Section 6.3.3 of the BOD. Software models are used to validate the design throughput capacity is met by the designed systems, inclusive of treatment processes, individual system and component capabilities, and equipment reliability and maintainability inputs. The HFP is designed to accommodate the receipt and treatment of specific waste volumes, using batch processing capabilities, to meet the design throughput requirements. The throughput rates are a function of the feed characteristics in a given batch volume. Batch volume and nominal transfer rate are used as inputs in the overall throughput analysis to ensure HCP and HFP systems operations are designed to support the 100 % capacity melter throughput for glass production of 3.75 metric tons of glass (MTG)/day/melter (total of 7.5 MTG per day), as stipulated in the WTP Contract.~~ As stated in the BOD, the 44 gpm nominal transfer rate is considered a key design feature assumed in modeling and Office of River Protection (ORP) concurrence is required before the capability can be reduced in design.

~~Section 6.3.3 of the BOD states the design throughput transfer rate is 44 gpm which should be the nominal target design for the pump. However, Section 7.7.4 of 24590-HLW-MVC-HFP-00001, Process Information for HFP Vessels (HFP-VSL-00001, HFP-VSL-00002, and HFP-VSL-00005, and HFP-VSL-00006), determined the minimum transfer rate to be 35 gpm. 44 gpm is considered to be the nominal transfer rate, recognizing that actual transfer rates may be faster or slower depending on the actual waste characteristics. In addition, 24590-101-TSA-W000-0004-172-00001, Final Technical Basis for HLW Vitrification Stream Physical and Rheological Property Bounding Conditions, and PIBOD, 24590-WTP-DB-PET-09-001 table B-4 specify the transfer rate must be~~

~~accomplished at a bounding rheology of 30 Pa and 40 cP(refer to 24590-WTP-GPG-M-0058, Section 4.5.1, *Minimum Flow Velocity for Slurry Lines*).~~

~~[ALARA]~~

Verification: Verification is expected to be achieved through the following:

Verif. Method	Verif. By	Plan	Notes/Comments
~~**A**~~	~~**ENG**~~	~~Perform an analysis of the HCP and HFP piping systems to determine the MFPV to MFV transfer rates required to satisfy facility throughput.~~	
R	**ENG**	Review the design to verify that the HFP system is capable of transferring MFPV content to the MFV at a rate of 44 gpm~~conformance with the analysis~~.	
~~**T**~~	~~**SUP**~~	~~Obtain test data from the supplier validating the minimum flow rate.~~	~~**Component Tag Numbers (CTN):**~~ ~~HFP-PMP-00018A, -00018B, -00005A, -00005, -00007, and -00017.~~ ~~**Test Conditions:**~~ ~~Simulant with a viscosity of ≥40 cP and yield stress of ≥30 Pascal (Pa) or an approved alternative (i.e., in an approved supplier test plan)~~ ~~**Acceptance Criteria:**~~ ~~Meets 44 gpm or higher at test conditions~~
T	**SU/ COM**	Perform an integrated system test to verify the MFPV to the MFV transfer rate ~~complies with the analysis~~is achievable.	

3.4.1.1.2 MFV to Melter Transfer Rate

Requirement: The HFP system shall be capable of transferring MFV content to the melter at a transfer rate of 2 gpm. [Section 6.3.3, BOD] (A.10)~~[**HOLD**] The HFP system shall provide a transfer flow rate sufficient to support the 100% capacity melter throughput for glass production of 3.75 metric tons of glass (MTG)/day/melter (total of 7.5 MTG per day) for transfers from the MFV to the melter. [Section C.7(b)(3), No. DE-AC27-01RV14136] [Sections 6.3.3, 11.7.4, BOD](A.10).~~

Basis Discussion: ~~The design throughput (processing) capabilities for the HCP and HFP systems are defined in Section 6.3.3 of the BOD. Software models are used to validate the design throughput capacity is met by the designed systems, inclusive of treatment processes, individual system and component capabilities, and equipment reliability and maintainability inputs. The HFP is designed to accommodate the receipt and treatment of specific waste volumes, using batch processing capabilities, to meet the design throughput requirements. The throughput rates are a function of the feed characteristics in a given batch volume. Batch volume and nominal transfer rate are used as inputs in the overall throughput analysis to ensure HCP and HFP systems operations are designed to support the 100 % capacity melter throughput for glass production of 3.75 metric tons of glass (MTG)/day/melter (total of 7.5 MTG per day), as stipulated in the WTP Contract.~~ As stated in the BOD, the 2 gpm nominal transfer rate is considered a key design feature assumed in modeling and ORP concurrence is required before the capability can be reduced in design.

~~Section 6.3.3 of the BOD includes a transfer rate of 2 gpm, but calculation 24590-HLW-MVC-HFP-00001 determined the minimum transfer rate to be 2.53 gpm. The 2.53 gpm is considered to be the nominal transfer rate recognizing that actual transfer rates may be faster or slower depending on the actual waste characteristics. In addition, 24590-101-TSA-W000-0004-172-00001 specifies the transfer rate must be accomplished at a bounding rheology of 30 Pa and 40 cP. The rate (2.53 gpm) is based on the combined flow with both ADS pumps operating. This requirement and the associated ADS pump design is on "[**HOLD**]" until the BOD is updated to reflect the bounding minimum required transfer rate.~~

~~[ALARA]~~

Verification: Verification is expected to be achieved through the following:

Verif. Method	Verif. By	Plan	Notes/Comments
~~**A**~~	~~**ENG**~~	~~Perform an analysis of the HCP and HFP piping systems to determine the MFV to melter transfer rate required to satisfy facility throughput.~~	
R	**ENG**	Review the design to verify that the HFP system is capable of transferring MFV content to the melter at a rate of 2 gpm~~conformance with the analysis~~.	
~~**T**~~	~~**SUP**~~	~~Obtain test data from the supplier validating the minimum flow rate.~~	~~**CTNs:** HFP-PMP-00001, -00002, -000014, and -00015.~~ ~~**Test Conditions:**~~ ~~Simulant with a viscosity of ≥40 cP and yield stress of ≥30 Pa or an approved alternative (i.e., in an approved supplier test plan)~~ ~~**Acceptance Criteria:**~~ ~~Meets 2 gpm or higher at test conditions~~
T	**SU/ COM**	Perform an integrated system test to verify that the MFV to the melter transfer rate is achievable~~the ADS pumps are capable of providing a minimum transfer rate, as determined by the analysis, from the MFV to the melter sufficient to support HLW throughput~~.	~~The BOD specifies a nominal 2 gpm based on the combined flow with both ADS pumps operating.~~

3.4.1.1.3 ~~Minimum~~ Sampling Transfer Rate

Requirement: The HFP system shall provide a transfer flow rate to the ASX sample extraction point that supports a 90 percent confidence level that the sample is within ± 10% of the true value in the HFP vessels. [Section 4.1.2.2, IHLW~~ Waste Form Compliance Plan for the Hanford Tank Waste Treatment and Immobilization Plant~~] ~~[Section 11.7.4, BOD]~~(A.3, A.6)~~.~~

Basis Discussion: The HFP sample/transfer pumps provide the motive force, adequate to maintain homogeneous mixture characteristics, for the vessel contents to pass through the HFP sampling recirculation loop where an ASX autosampler extracts a sample for analysis in the Analytical Laboratory. Due to the solids content of the sample slurry, the recirculation line velocity must meet or exceed the flow rate to prevent settling of solids in the sample loop piping that could cause an unrepresentative sample to be taken (24590-HLW-WSF-ENG-07-005, *WAI Screening of HFP Sample Loop Flow Meter*). In addition, 24590-101-TSA-W000-0004 -172-00001, Final Technical Basis for HLW Vitrification Stream Physical and Rheological Property Bounding Conditions, and

PIBOD, 24590-WTP-DB-PET-09-001 table B-4 specify the transfer rate must be accomplished at a bounding rheology of 30 Pa and 40 cP while not exceeding 10 feet per second (fps). ~~The MFVs are designed to interface with the ASX for sampling, but the pumps are not to be installed unless sampling is needed. The BOD infers the transfer rate must be achieved with the number of pumps kept to a minimum. A similar test, using the target flow rate of 44 gpm, was performed during the Vitreous State Laboratory's testing (refer to Section 4.4.10, Figures 4.108 and 4.109, 24590-101-TSA-W000-0009-195-00003, *Report – Pretreated Waste and Melter Feed Composition Variability Testing using HLW Simulants*).~~

~~[ALARA]~~

Verification: Verification is expected to be achieved through the following:

Verif. Method	Verif. By	Plan	Notes/Comments
A	**ENG**	Perform an analysis of the HFP system~~s~~ to ~~determine~~ verify the required sampling transfer rate to maintain homogeneity.	
R	**ENG**	Review the design of the HFP system to verify conformance with the results of the analysis.	
T	**SU/ COM**	Perform an integrated system test to verify the sample/transfer pumps are capable of providing a minimum transfer rate to maintain homogeneity from the MFPV to the ASX.	Section 6.4 of WAI Screening of HLW Glass Chemistry Processing Activities specifies the "slurry flow rate must be within the range established during VSL testing." The value used in testing was 44 gpm.

3.4.1.2 Design Life

3.4.1.2.1 ~~Design (Operating) Life~~Material Selection for Accessible Plant Equipment

Requirement: The HCP/HFP system equipment not installed in black cells shall be constructed of materials compatible with the HLW Facility room operating environment in which they are installed over a nominal plant life of 40 years, inclusive of maintenance. [Sections 11.1.1, 11.4.1, 11.9, BOD] [Section 14.8, ORD] ~~All non-replaceable and non-maintainable HCP and HFP SSCs located within cells where routine access in not possible shall be designed to have an operating life with that of the facility, 40 years. All other HCP and HFP SSCs shall be designed to be replaceable and maintainable to meet the overall 40-year operating life of the facility.: [Section C.7(a)(1), WTP Contract][Sections 11.1.1, 11.7.4, 11.8.3, 15.3.1, BOD][Sections 5.6.2, 5.6.5, PDSA - HLW Facility][Safety Criterion 4.4-1, 4.4-3 Appendix H - Sections 3.8, 4.0, SRD,][Sections 14.1, 14.2, ORD].~~

Basis Discussion: Operating environment considerations include but are not limited to chemical, radiological, and thermal exposure during all operating conditions. Equipment accessibility and maintenance contribute to the material selection process. The selection of equipment installed in remotely maintained caves and cells addresses the operating environment to minimize maintenance requirements. Other accessible and maintainable equipment not having a design life of 40 years is specified for a cost-effective design life, taking into account current technology, ALARA exposure principles, and waste minimization. 24590-HLW-U0D-W16T-00001, *HLW Room Environment Data Sheet*, identifies environmental conditions for rooms that house safety SSCs while Table 12-1 of the BOD provides the internal design temperatures for other rooms in the facility. ~~Equipment and material selection is based on proven performance, value engineering principles, and fit-for-function principles. The selection of equipment and materials is further addressed in detail as the design progresses. Equipment design needs to consider the routine environmental exposures under normal operations for non-safety equipment; safety~~

~~and post-accident monitoring (PAM) equipment also consider abnormal and emergency exposures-this minimizes the need for equipment maintenance, exposure, and radiological waste generation in radiological areas.~~ [ALARA]

Verification: Verification is expected to be achieved through the following:

Verif. Method	Verif. By	Plan	Notes/Comments
~~R~~	~~ENG~~	~~The "qualified" design life verification for safety and PAM SSCs is to be verified through review of equipment design as documented in equipment qualification packages (EQP).~~	~~Design life for safety and PAM equipment to be documented in equipment qualification package.~~
R	ENG	Review the design to verify that HCP/HFP system equipment not installed in black cells is constructed of materials compatible with the HLW Facility room operating environment in which they are installed over a nominal plant life of 40 years, inclusive of maintenance.~~Review design to verify design life of non-replaceable, non-maintainable SSCs is documented in procurement documents and supported by supplier certificates of conformance or verify SSCs have been designed to be replaceable and maintainable to meet the overall 40-year operating life of the facility.~~	~~May be documented in an evaluation/assessment~~

3.4.1.2.1.1 Material Selection for Equipment in Black Cells

Requirement: The HCP/HFP system equipment installed in black cells and hard-to-reach areas not provided with redundancy shall be constructed of materials compatible with the HLW Facility room operating environment in which they are installed over a design life of 40 years without maintenance activities. [Sections 11.1.1, 11.7.4, 11.9, 16.4.1.1, 16.4.2.2, BOD]

Basis Discussion: Operating environment considerations include but are not limited to chemical, radiological, and thermal exposure during all operating conditions. 24590-HLW-U0D-W16T-00001, *HLW Room Environment Data Sheet*, identifies environmental conditions for rooms that house safety SSCs while Table 12-1 of the BOD provides the internal design temperatures for other rooms in the facility.

Verification: Verification is expected to be achieved through the following:

Verif. Method	Verif. By	Plan	Notes/Comments
R	ENG	Review the design to verify that HCP/HFP system equipment not installed in black cells is constructed of materials compatible with the HLW Facility room operating environment in which they are installed over a nominal plant life of 40 years, inclusive of maintenance	

3.4.1.2.2 Material Selection for Process Fluids ~~of Construction and Erosion/Corrosion Design Parameters~~

Requirement: The HCP/HFP system equipment and piping shall be constructed of materials compatible with the expected operating process fluid conditions over a nominal plant life of 40 years. [Sections 11.1.1, 11.9, 16.4.1.4, BOD] ~~The HFP/HCP system shall be designed to include allowance for erosion/corrosion and use materials of construction , including wear resistant coatings in accordance with: [Safety Criterion 4.2-3, Appendix H Section~~

~~4.0, SRD][Appendix C.2.3.1 and Sections 6.1, 11.4.1, 11.8.3, 11.8.3.1, 14.10.1, 16.4.1.4, 16.4.2.8, BOD][Sections 9.1, 20.0, ORD].~~

Basis Discussion: When selecting materials for plant equipment, characteristics such as chemical resistance, hardness, and process compatibility are addressed. ~~The allowance for erosion/corrosion and applicable materials of construction are limited to those components that come into contact with the process fluids and that are required to maintain confinement/containment of those process fluids. Materials of construction that can withstand the erosive/corrosive low-activity waste effluents and chemicals are selected. The materials for the HFP system equipment and components should be selected based on the stream data presented in the process corrosion data sheet report. If vessel washing via internal spray mechanisms is needed to prevent or minimize corrosion, the operational limitations shall be identified in the vessel corrosion evaluation. Refer to Tables A-14, B-4, B-5, 24590-WTP-DB-PET-09-001, Process Inputs Basis of Design [PIBOD]); and 24590-WTP-M4C-V11T-00024, *WTP Process Flowsheet Mass & Energy Balance Analysis for Input to Material Selection Assessments*, for the fluid characteristics of the process streams.~~

~~The HFP/HCP system streams are accounted for in the erosion and corrosion analyses and are fabricated with materials of construction that can withstand the radioactive, thermal, and erosive/corrosive environment caused by the material. Design and verification is expected to be to the most recent issued revisions of the listed corrosion evaluations. If vessel washing via internal spray mechanisms is needed to prevent or minimize corrosion, the operational limitations are identified in the vessel corrosion evaluation.~~

~~Details of the allowed materials corrosion allowances can be found in:~~
~~24590-HLW-N1D-HFP-00002, *HFP-PMP-00007 and HFP-PMP-00017 HLW - Melter 1 and 2 Feed Vessel Sample - Recirc Pump*~~
~~24590-HLW-N1D-HFP-00003, *HFP-VSL-00001 and HFP-VSL-00005 HLW - HLW Melter 1 and 2 Feed Preparation Vessel*~~
~~24590-HLW-N1D-HFP-00004, *HFP-VSL-00002 and HFP-VSL-00006 HLW - Melter 1 and 2 Feed Vessel*~~
[ALARA]

Verification: Verification is expected to be achieved through the following:

Verif. Method	Verif. By	Plan	Notes/Comments
A~~I~~	**ENG**	Perform an analysis to verify that the materials of construction are compatible with the expected operating process fluid conditions over the 40-year plant life.~~Perform an analysis/inspection of materials used in the HFP/HCP system which are in contact with, and are required to maintain confinement or containment of, the process fluids to verify that they are acceptable for use in the operating environment and have adequate erosion and corrosion allowances.~~	
R	**ENG**	Review the design to verify that HCP/HFP system equipment and piping is constructed of materials compatible with the expected operating process fluid conditions determined in the analysis.~~Review design components used in the HFP/HCP system which are in contact with, and are required to maintain confinement or containment of, the process fluids for concurrence with analysis.~~	

3.4.1.2.2.1 Material Corrosion Allowance

Requirement: The HCP/HFP system material corrosion allowance shall include erosion, corrosion, and synergistic effects, at minimum. [Section 18.5, BOD]

Basis Discussion: Specific corrosion/erosion design parameters are provided in requirements 3.4.1.2.2.2 through 3.4.1.2.2.14.

Verification: Verification is expected to be achieved through the following:

Verif. Method	Verif. By	Plan	Notes/Comments
A	ENG	Perform an analysis to verify the erosion, corrosion, and synergistic effects (at minimum) applicable to the material corrosion allowance of the HCP/HFP system.	
R	ENG	Review the design to verify that the HCP/HFP system material corrosion allowance includes erosion, corrosion, and synergistic effects (at minimum) as determined in the analysis.	

3.4.1.2.2.2 General Corrosion Wear Rate

Requirement: The HCP/HFP system corrosion allowance shall include the general uniform corrosion rate of 0.6 mpy (24 mils at 40 years), regardless of velocity, when utilizing materials identified in Table 18-1 of the BOD. [Section 18.6.1, BOD]

Basis Discussion: None.

Verification: Verification is expected to be achieved through the following:

Verif. Method	Verif. By	Plan	Notes/Comments
R	ENG	Review the design to verify that the HCP/HFP system material corrosion allowance includes the general uniform corrosion rate of 0.6 mpy (24 mils at 40 years), regardless of velocity, when utilizing materials identified in Table 18-1 of the BOD.	

3.4.1.2.2.3 Process Operating Limits Mitigating Localized Corrosion

Requirement: The HCP/HFP system shall not exceed the Process Localized Corrosion Design Limits specified in Table 18-1 of the BOD for the materials provided in the system. Materials outside the bounds of Table 18-1 shall be justified by analysis. [Section 18.6.2, Table 18-1, BOD]

Basis Discussion: Parameters impacting localized corrosion are pH, temperature, chloride to nitrate ratio, chloride to hydroxide ratio, and total chloride content. Table 18-1 in the BOD provides the design limits (design requirements) for each of these parameters for various materials. These values are bound by the process corrosion data (24590-WTP-RPT-PR-04-0001-01, *WTP Process Corrosion Data – Volume 1*, through 24590-WTP-RPT-PR-04-0001-06, *WTP Process Corrosion Data – Volume 6*) with additional margin applied.

Verification: Verification is expected to be achieved through the following:

Verif. Method	Verif. By	Plan	Notes/Comments
A	ENG	Perform an analysis to verify that the HCP/HFP system does not exceed the Process Localized Corrosion Design Limits specified in Table 18-1 of the BOD for the materials provided in the system. If the HCP/HFP system utilizes materials outside the bounds of Table 18-1, perform an additional analysis to verify the acceptable process localized corrosion design limits.	
R	ENG	Review the design to verify the HCP/HFP system does not exceed the Process Localized Corrosion Design Limits specified in Table 18-1 of the BOD or determined in the preceding analysis for the materials provided in the system.	

3.4.1.2.2.4 End Grain Corrosion Mitigation

Requirement: The design of the HCP/HFP system shall avoid the exposure of end grains to highly oxidizing acid conditions at high temperatures. [Section 18.8.2, BOD]

Basis Discussion: End grain corrosion is localized corrosion, which occurs along the worked direction of wrought stainless steels and Stellite™ exposed to highly oxidizing acid conditions as well as in other alloys under the "suitable" conditions.

Verification: Verification is expected to be achieved through the following:

Verif. Method	Verif. By	Plan	Notes/Comments
A	ENG	Perform an analysis to verify where end grain corrosion could occur in the HCP/HFP system.	
R	ENG	Review the design to verify that the HCP/HFP system design avoids the exposure of end grains to highly oxidizing acid conditions at high temperatures, where determined to be applicable in the analysis.	

3.4.1.2.2.5 Stress Corrosion Cracking

Requirement: Where stress corrosion cracking is a potential source of corrosion in the HCP/HFP system and the system does not utilize materials within the design limits listed in Table 18-1 of the BOD, low carbon alloys such as 304L or 316L or more resistant alloys such as 6% Mo and Ni/Cr/Mo alloys shall be used. [Section 18.8.3, BOD]

Basis Discussion: Most metals and particularly alloys, including stainless steels and the nickel base alloys, can suffer stress corrosion cracking. The SCC phenomenon occurs when an appropriate stress is applied to the metal, a conducive environment is present, and the metal is susceptible. It is also important to ensure that stainless steel is not contaminated with carbon if welded directly to the stainless steel structure. Otherwise, it is possible for the stainless steel to be more susceptible to stress corrosion cracking and other forms of intergranular attack.

Verification: Verification is expected to be achieved through the following:

Verif. Method	Verif. By	Plan	Notes/Comments
A	ENG	Perform an analysis to verify the potential sources of stress corrosion cracking in the HCP/HFP system where the system does not utilize materials within the design limits listed in Table 18-1 of the BOD.	
R	ENG	Review the design to verify that the HCP/HFP system utilizes low carbon alloys or more resistant alloys where stress corrosion cracking is a potential source of corrosion as determined in the analysis.	

3.4.1.2.2.6 Crevice Corrosion

Requirement: In high oxidizing situations where crevice corrosion is a potential source of corrosion in the HCP/HFP system, low carbon alloys such as 304L or 316L or more resistant alloys such as 6% Mo and Ni/Cr/Mo alloys shall be used. [Section 18.8.4, BOD]

Basis Discussion: Crevice corrosion is a form of localized corrosion that can occur within crevices or at shielded surfaces where a stagnant solution is present, e.g., at metal/metal or metal/non-metal junctions such as under bolts, gaskets and valve seats. The presence of solid precipitates/sludges can also create crevice corrosion conditions. Crevice corrosion is similar to pitting in mechanism, though generally not so rapidly debilitating. It can, however, lead to pitting or stress corrosion cracking.

Verification: Verification is expected to be achieved through the following:

Verif. Method	Verif. By	Plan	Notes/Comments
A	ENG	Perform an analysis to verify the potential sources of crevice corrosion where the system does not utilize materials within the design limits listed in Table 18-1 of the BOD.	
R	ENG	Review the design to verify that the HCP/HFP system utilizes low carbon alloys or more resistant alloys in high oxidizing situations where crevice corrosion is a potential source of corrosion as determined in the analysis.	

3.4.1.2.2.7 Microbial Induced Corrosion

Requirement: The HCP/HFP system shall only use treated process water, potable water, or deionized (demineralized) water during flushing or hydrostatic testing. [Section 18.8.6, BOD]

Basis Discussion: Using treated process water, potable water, or demineralized water minimizes the potential of microbial induced corrosion (MIC).

Verification: Verification is expected to be achieved through the following:

Verif. Method	Verif. By	Plan	Notes/Comments
R	ENG	Review the design of the HCP/HFP system to verify that only treated process water, potable water, or deionized (demineralized) water is used during flushing or hydrostatic testing.	

3.4.1.2.2.8 Corrosion Fatigue

Requirement: The HCP/HFP system vessels and piping shall be designed to accommodate the expected fatigue cycles over the 40-year design life. [Section 18.8.7, BOD]

Basis Discussion: Fatigue is the phenomenon leading to fracture under cyclic stresses that have a maximum value less than the tensile strength of the material. Corrosion fatigue is fatigue exacerbated by corrosion concurrent with or subsequent to the application of the stress.

Verification: Verification is expected to be achieved through the following:

Verif. Method	Verif. By	Plan	Notes/Comments
A	ENG	Perform an analysis to verify the expected fatigue cycles the HCP/HFP system vessels and piping are expected to accommodate over their 40-year design life.	
R	ENG	Review the design to verify that the HCP/HFP system is designed to accommodate the fatigue determined in the analysis.	

3.4.1.2.2.9 Vapor Phase Corrosion

Requirement: The HFP system shall consider the conditions in the regions in contact with vapor only or at the vapor/liquid interface in specifying corrosion allowances. [Section 18.8.8, BOD]

Basis Discussion: The conditions in the regions in contact with vapor only or at the vapor/liquid interface are different from those in the bulk liquor.

Verification: Verification is expected to be achieved through the following:

Verif. Method	Verif. By	Plan	Notes/Comments
R	ENG	Review the design of the HFP system to verify that vapor phase corrosion is considered in specifying corrosion allowances.	

3.4.1.2.2.10 Galvanic Corrosion Protection

Requirement: Galvanic corrosion protection shall be provided where required in the HCP/HFP system. [Section 18.8.9, BOD]

Basis Discussion: When a metal is immersed in a liquid it will establish a corrosion potential or rest potential at which the rate of anodic reaction is equal to the rate of cathodic reaction. When two dissimilar metals are placed in electrical contact in such a solution, an electrochemical cell will be set up and the difference in their rest potentials will cause a current to flow between them. In the WTP, though several alloys may be used in a given vessel, they often will be similar and corrosion potential differences may not be great. This similarity may cease, for example, in a crevice where one component may become active and corrode severely. Due to the use of steam ejectors and heated tanks, there are opportunities for the presence of thermogalvanic corrosion cells to be set up. If two portions of the same component are at different temperatures, the warmer section often becomes the anode and corrodes.

Verification: Verification is expected to be achieved through the following:

Verif. Method	Verif. By	Plan	Notes/Comments
A	ENG	Perform an analysis to verify where galvanic corrosion protection is required in the HCP/HFP system.	
R	ENG	Review the design to verify that the HCP/HFP system is provided with galvanic corrosion protection, where required.	

3.4.1.2.2.11 Passivation of Stainless Steel

Requirement: The HCP/HFP system shall include provisions for the addition of chemicals to promote re-passivation after or during liquid transfers. The HCP/HFP system shall be designed to be chemically cleaned, descaled, and re-passivated. [Section 18.6.5, BOD]

Basis Discussion: Stainless steels exhibit a stable passive oxide film capable of protecting the underlying surface from corrosion. Stainless steel passive oxide films form naturally on the metal surface. Passive oxide film consists of iron, chromium, nickel, and oxygen and minor constituents include molybdenum and manganese. The oxide covers the surface and is tightly adherent and creates a barrier thereby reducing the corrosion rate of the base metal. A characteristic of the passive oxide film is to spontaneously reform when scratched. The passive oxide film acts as a barrier to slow diffusion and reduce corrosion reaction rates.

Verification: Verification is expected to be achieved through the following:

Verif. Method	Verif. By	Plan	Notes/Comments
R	ENG	Review the design to verify that the HCP/HFP system includes provisions for the addition of chemicals to promote re-passivation after or during liquid transfers and that the system is designed to be chemically cleaned, descaled, and re-passivated.	

3.4.1.2.2.12 Synergy Effects

Requirement: If the velocity in HCP/HFP system piping and vessels is within 4-6 m/s, the design shall use a velocity greater than 6 m/s to preclude the use of an additional allowance for synergy effects. [Section 18.8.1, BOD]

Basis Discussion: The synergistic effects of erosion and corrosion are required to be evaluated in the design of piping and vessels. At velocities less than 4m/s, corrosion is the dominant wear mechanism and at velocities greater than 6 m/s, erosion is the dominant wear mechanism. The synergistic region exists between 4-6 m/s.

Verification: Verification is expected to be achieved through the following:

Verif. Method	Verif. By	Plan	Notes/Comments
A	ENG	Perform an analysis to verify the HCP/HFP system vessel and piping velocities.	
R	ENG	Review the design of the HCP/HFP system to verify piping and vessels use a velocity greater than 6 m/s if the velocity is within 4-6 m/s.	

3.4.1.2.2.13 General Erosion Wear Rate in Piping

Requirement: The HCP/HFP system corrosion allowance for piping shall include an erosion wear rate in accordance with Table 3-1, below. Wear rates for piping operating outside the bounds of this table shall be justified by analysis. [Section 18.7.1, BOD]

Table 3-1 Erosion Wear Rates for Piping Design

Contains Glass Formers	Velocity	Solids	Erosion Wear Rate
No	≤12 ft/s	0-2 wt%	16 mils (0.016in)/0.4 mpy
No	≤12 ft/s	> 2 - 27.3 wt%	70 mils (0.07in)/1.75 mpy
Yes	≤ 10 ft/s	0-64 wt%	101 mils (0.101in) / 2.525 mpy

Basis Discussion: General erosion wear rates are provided in the BOD for stainless steel and high nickel alloy piping dependent on velocity and solids concentration. The basis for Table 3-1 is provided in 24590-WTP-M0C-50-00019, *Total Corrosion Allowances for WTP Stainless Steel and High-Alloy Piping Systems*.

Verification: Verification is expected to be achieved through the following:

Verif. Method	Verif. By	Plan	Notes/Comments
A	**ENG**	Perform an analysis to verify the velocity and solids content in the HCP/HFP system process stream. If the analysis determines that the piping operates outside the bounds of Table 3-1, perform an additional analysis to verify the acceptable erosion wear rate for the piping.	
R	**ENG**	Review the design to verify that the HCP/HFP system corrosion allowance for piping includes an erosion wear rate in accordance with Table 3-1 or the preceding analysis, depending on the velocity and solids content of the process stream.	

3.4.1.2.2.14 General Erosion Wear Rate for Vessels

Requirement: The HCP/HFP system corrosion allowance for vessels shall include an erosion wear rate in accordance with Table 3-2, below. Wear rates for vessels operating outside the bounds of this table shall be justified by analysis. [Section 18.7.2, BOD]

Table 3-2 Erosion Wear Rates for Vessel Design

Contains Glass Formers	Velocity	Solids	Erosion Wear Rate
No	≤12 ft/s	0-2 wt%	4 mils (0.04in)/0.1 mpy
No	≤12 ft/s	> 2 - 27.3 wt%	16 mils (0.016in)/ 0.4 mpy
Yes	≤ 10 ft/s	0-64 wt%	101 mils (0.101in) / 2.525 mpy

Basis Discussion: General erosion wear rates are provided in the BOD for stainless steel and high nickel alloy vessels dependent on velocity and solids concentration. The basis for Table 3-2 is provided in 24590-WTP-M0C-50-00004, *Wear Allowance for WTP Waste Slurry Systems*.

Verification: Verification is expected to be achieved through the following:

Verif. Method	Verif. By	Plan	Notes/Comments
A	ENG	Perform an analysis to verify the velocity and solids content in the HCP/HFP system process stream. If the analysis determines that the vessel operates outside the bounds of Table 3-2, perform an additional analysis to verify the acceptable erosion wear rate for the vessel.	
R	ENG	Review the design to verify that the HCP/HFP system corrosion allowance for vessels includes an erosion wear rate in accordance with Table 3-2 or the preceding analysis, depending on the velocity and solids content of the process stream.	

3.4.1.2.2.15 Fretting/Wear

Requirement: Where fretting or wear is a potential issue in the HCP/HFP system, an appropriate additional corrosion allowance shall be added. [Section 11.9.1.2, BOD]

Basis Discussion: An example of a configuration where fretting or wear is a potential issue is when pipes pass through baffle plates.

Verification: Verification is expected to be achieved through the following:

Verif. Method	Verif. By	Plan	Notes/Comments
A	ENG	Perform an analysis to verify where fretting or wear is a potential issue in the HCP/HFP system.	
R	ENG	Review the design to verify that an appropriate additional corrosion allowance is added where fretting or wear is a potential issue.	

3.4.1.2.2.16 Galling of Moving Surfaces

Requirement: Where galling could occur in the HCP/HFP system, a material grade which is less susceptible to galling shall be used for at least one of the components, or the use of dry lubricants or metallic coatings shall be used. [Section 11.9.1.1, BOD]

Basis Discussion: An example of a material grade that is less susceptible to galling is UNS S21800.

Verification: Verification is expected to be achieved through the following:

Verif. Method	Verif. By	Plan	Notes/Comments
A	ENG	Perform an analysis to verify where galling could occur in the HCP/HFP system.	
R	ENG	Review the design to verify that the HCP/HFP system uses a material grade which is less susceptible to galling, dry lubricants, or metallic coatings where the analysis determines that galling could occur within the system.	

3.4.1.2.2.17 Cavitation Damage

Requirement: The HCP/HFP system pumping systems and agitators shall be designed to minimize cavitation. [Section 18.8.10, BOD]

Basis Discussion: Cavitation is caused by the formation and collapse of vapor bubbles in a liquid near a metal surface. The possibility for cavitation damage exists in high velocity fluids, such as those found in fluidic devices or centrifugal pumps.

Verification: Verification is expected to be achieved through the following:

Verif. Method	Verif. By	Plan	Notes/Comments
A	ENG	Perform an analysis to verify where cavitation is a concern in the HCP/HFP system.	
R	ENG	Review the design to verify that the HCP/HFP system pumping systems and agitators are designed to minimize cavitation where it is determined to be applicable in the analysis.	

3.4.1.2.2.18 Creep

Requirement: The HCP/HFP system high temperature vessels and piping shall be designed to allow for creep over the life of the component. [Section 18.8.11, BOD]

Basis Discussion: Creep is the continuous increasing deformation of a material over time under a constant load. It is only experienced in structures, systems, and components operating at high temperatures.

Verification: Verification is expected to be achieved through the following:

Verif. Method	Verif. By	Plan	Notes/Comments
A	ENG	Perform an analysis of the HCP/HFP system vessels and piping to verify the expected operating temperature of the component.	
R	ENG	Review the design to verify that high temperature vessels and piping are designed to allow for creep over the life of the component.	

3.4.1.2.3 Room Environment Conditions for Safety SSCs

Requirement: The safety SSCs in the HCP/HFP system shall be designed and qualified to function as intended in the environments associated with the events for which they are intended to respond. Environmental qualification shall be to IEEE 323-83. The effects of aging on normal and abnormal functioning shall be considered in design and qualification using IEEE 323-83. [Safety Criterion 4.1-3, Safety Criterion 4.4-1, SRD] [Section 11.7.3, BOD] ~~The safety equipment in the HLW HFP/HCP system credited with a safety function(s) and post-accident monitoring instruments (24590-HLW-RPT-ENS-12-002, HLW Preliminary Post Accident Monitoring Report) shall be designed and qualified to perform their safety functions as intended in the environment conditions associated with the events for which they are intended to respond, inclusive of aging effects throughout their qualified life. [Safety Criterion 4.4-1, 4.3-4, SRD][Section 11.7.3, BOD].~~

Basis Discussion: Safety SSCs, designated as safety class (SC) or safety significant (SS), are designed and qualified to perform their safety function. 24590-HLW-U0D-W16T-00001, *HLW Room Environment Data Sheet*,

identifies environmental conditions for rooms that house safety SSCs. ~~Safety SSCs designated as Safety Class (SC) and Safety Significant (SS) are designed and qualified to function as intended in the room environment conditions associated with the events for which they are intended to respond. The effects of aging on normal and abnormal functioning are considered in design and qualification. Data Sheet 24590-HLW-U0D-W16T-00001, HLW room environment datasheet, identifies environment conditions for rooms that house safety SSCs.~~
[ALARA]

Verification: Verification is expected to be achieved through the following:

Verif. Method	Verif. By	Plan	Notes/Comments
A/T	**ENG/ SUP**	Perform an analysis or supplier testing to verify the ability of the SSCs credited with a safety ~~or PAM~~ function to withstand specified environmental conditions for the rooms in which they are installed.	~~Document in EQP. See HLW Room Environment Data Sheet (24590-HLW-U0D-W16T-00001) for room environmental conditions.~~
R	**ENG**	Review the design to verify that safety SSCs are environmentally qualified to IEEE 323-83 inclusive of the effects of aging on normal and abnormal functioning.~~Review of design to verify compliance with the HLW room environment data sheet conditions.~~	~~May be accomplished by EQP or separate evaluation/assessment and supplier certificates of conformance.~~

3.4.1.2.4 ~~Room Environment Conditions for Non-Safety SSCs~~Deleted

~~**Requirement:** Non-safety equipment/components shall be designed to operate and withstand the service conditions per Table 12-1 in the BOD. [Table 12-1 BOD][Sections 11.16, 16.1, ORD].~~

~~**Basis Discussion:** Non-safety SSCs are designed to function as intended in the room environment conditions associated with their location.~~

~~[ALARA]~~

~~**Verification:** Verification is expected to be achieved through the following:~~

~~Verif. Method~~	~~Verif. By~~	~~Plan~~	~~Notes/Comments~~
~~**R**~~	~~**ENG**~~	~~Review of design of non-safety, active SSCs to ensure compliance with BOD Table 12-1 conditions.~~	~~May be documented in an assessment/evaluation report.~~

3.4.1.2.5 Nonmaintainable Soft or Nonmetallic Parts

Requirement: The HCP/HFP system equipment and components located in black cells and hard-to-reach areas shall be designed with no non-removable soft or nonmetallic parts that could be affected by the total integrated radiation dose, including gamma and beta~~shall be designed with no nonmaintainable soft or nonmetallic parts in hard-to-reach areas that could be affected by the total integrated radiation dose including gamma and beta~~. [Section 16.4.1.1, BOD]~~.~~

Basis Discussion: ~~The HCP and HFP equipment and components are designed to withstand the internal beta radiation of the applicable process streams (i.e., HLP09, HFP06, or HFP03), and external gamma radiation (room) dose.~~ Soft or nonmetallic parts can be affected by radiation and lose their capability to perform in this environment. [ALARA]

Verification: Verification is expected to be achieved through the following:

Verif. Method	Verif. By	Plan	Notes/Comments
A	ENG	Perform an analysis to verify the total integrated radiation dose (including gamma and beta) to HCP/HFP system equipment and components within black cells and hard-to-reach areas.	
R	ENG	Review the design to verify that HCP/HFP system equipment and components located in black cells and hard-to-reach areas do not contain non-removable soft or non-metallic parts that could be affected by the total integrated radiation dose (including gamma and beta) determined in the analysis. ~~Review of Design to verify there are no hard-to-reach soft or nonmetallic parts.~~	~~May be accomplished by EQP or separate assessment.~~

3.4.1.2.6 ~~Seismic Design~~Moved to Section 3.4.2.4

~~**Requirement:** The HCP and HFP system equipment, including PAM, shall be designed for seismic conditions in accordance with Table 3-1: [Sections 3.4.2.1.1.5, 3.4.2.1.1.6, 4.3.7.1, 4.3.7.2, 4.3.7.3, 4.3.7.3.4, 4.3.8, 4.3.15, 4.4.7, 4.4.27 Appendix 4B, PDSA - HLW Facility][Appendix 3A, PDSA - PT Facility][Sections 16.4.2.1, 16.4.2.8, BOD] [Safety Criterion 4.1-3, 4.3-4, SRD].~~

~~**Table 3-1 HCP and HFP Seismic Design Categories**~~

~~Description~~	~~Seismic Category~~	~~Reference~~
~~MFPVs (HFP-VSL-00001 /00005)~~	~~SC-I~~	~~Sections 3.4.2.1.1.5, 4.3.7.1, PDSA - HLW Facility and Section 16.4.2.1, BOD~~
~~MFVs (HFP-VSL-00002/00006)~~	~~SC-I~~	~~Sections 3.4.2.1.1.5, 4.3.7.1, PDSA - HLW Facility and Section 16.4.2.1, BOD~~
~~Air Amplifier system (HFP-EJCT-00006/00007/00008/00009)~~	~~SC-I~~	~~Sections 3.3.5.2.12, 4.3.7.2, PDSA - HLW Facility~~
~~HFP vessel overflow feature~~	~~SC-I~~	~~Sections 3.3.5.2.12, 4.3.7.3, PDSA - HLW Facility~~
~~[**HOLD**] Hydrogen mitigation system (air sparging and purging)~~	~~SC-I~~	~~Sections 3.4.2.1.1.3, 3.4.2.1.1.5, 4.3.8, 4.3.8.4, Appendix 4B, PDSA - HLW Facility and Section 16.4.2.8, BOD~~
~~Piping (includes inline components, such as valves, jumpers, and instrument lines) shall be seismic category SC-III, except the following: HCP double-walled (coaxial) transfer piping (inner pipe): seismic category **SC-I** HCP double-walled (coaxial) transfer piping (outer pipe): seismic category **SC-II** GFR line outside the melter cave, up to and including the isolation valve and the GFR air purge line: seismic category **SC-I**~~	~~SC-III~~	~~Section 4.4.7, PDSA - HLW Facility Exceptions: Table 3A-13, PDSA - PT Facility, Section 4.3.15, PDSA - HLW Facility)~~
~~ADS pumps and discharge lines (HFP-PMP-00001-00002, 0001400015)~~	~~SC-III~~	~~Section 4.4.27, PDSA - HLW Facility~~

~~**Table 3-1 HCP and HFP Seismic Design Categories**~~

~~Description~~	~~Seismic Category~~	~~Reference~~
~~PAM instruments~~	~~Seismic category designations per PAM report*~~	~~Safety Criterion 4.3-4, SRD~~
~~Safety instrument air supply lines, valves, and the ISA check valves~~	~~SC-I~~	~~Section 4.3.8.4, PDSA – HLW Facility~~

~~*24590-HLW-RPT-ENS-12-002, *HLW Preliminary Post Accident Monitoring Report*~~

~~**Basis Discussion:** Section 2.4.12 of 24590-WTP-PSAR-ESH-01-002-01, *Preliminary Documented Safety Analysis to Support Construction Authorization; General Information* (PDSA – General) states the following: "All components and parts of the equipment that provide or contribute to the safety functions and accident monitoring functions, including equipment supports and anchorage, shall be qualified accordingly." This qualification ensures SSCs meet the designated seismic design requirements. Document 24590-WTP-SRD-ESH-01-001-02, *Safety Requirements Document Volume II* (SRD), Safety Criterion 4.1-3 details the equivalence of the WTP seismic category to the seismic performance category of DOE-STD-1020-94, *Natural Phenomena Hazards Design and Evaluation Criteria for Department of Energy Facilities*. The SRD also states that SSCs designated as safety SSCs are to be designed to withstand the effects of NPH events (e.g., earthquakes, wind, and floods) without the loss of capability to perform specified safety functions. HFP vessel sparger design is on "[**HOLD**]" due to differences between 24590-HLW-PL-ENS-13-0001, Safety Design Strategy for the High-Level Waste Facility (SDS), and the PDSA - HLW Facility and the resolution is expected to eliminate sparging.~~

~~[ALARA]~~

~~**Verification:** Verification is expected to be achieved through the following:~~

~~Verif. Method~~	~~Verif. By~~	~~Plan~~	~~Notes/Comments~~
~~A/T~~	~~ENG/ SUP~~	~~Analysis or testing performed on safety SSCs to verify capability to withstand seismic event.~~	~~This is expected to be documented in the EQPs.~~
~~R~~	~~ENG~~	~~Review of design to verify conformance to the results of the analysis requirements and to verify that the safety function, as established in the preliminary documented safety analysis (PDSA) is correctly reflected in the equipment qualification documents.~~	~~EQP is issued and verified to align with the PDSA/DSA. Review is expected to be joint effort between design agency and EQ group.~~

3.4.1.2.7 ~~Durability of Equipment Subject to~~ Decontamination

Requirement: The HCP and HFP system equipment subject to decontamination ~~agents such as frozen $C0_2$, Demineralized water, steam, and nitric acid,~~ shall be ~~capable of~~designed to withstand~~ing~~ this process without any reduction of functionality through degradation of the electrical, mechanical, or any other components involved. [Section~~s~~ 9.1, ~~20.0,~~ ORD] ~~[Section 11.8.3.1, BOD]~~ (B.1)

Basis discussion: Equipment operating in a contaminated environment is monitored and, if necessary, decontaminated before maintenance. The equipment might be subjected to decontamination agents such as demineralized water, steam, or nitric acid. [ALARA]~~The specifications must convey that the equipment design accounts for these processes.~~

Verification: Verification is expected to be achieved through the following:

Verif. Method	Verif. By	Plan	Notes/Comments
~~A~~	~~ENG~~	~~Perform an analysis to determine which SSCs within the HFP/HCP system are subject to decontamination.~~	
R	ENG	Review the design to verify HCP/HFP system equipment can withstand decontamination without degradation or reduction in equipment functionality.~~Review design and vendor data to verify compliance with requirement to withstand decontamination without degradation to functionality.~~	

3.4.2 Nuclear Safety, ALARA, Environmental, and Other Regulatory Requirements

~~The WTP dangerous waste permit requirements for leak detection on the HCP transfer line from the PT Facility are included in the HLP SDD. The HCP and HFP systems sump leak detection requirements are included in HLW RLD SDD.~~

3.4.2.1 Safety ~~Designations~~Classification

Requirement: The following HCP/HFP system SSCs shall be ~~designated~~ classified as safety SSCs in accordance with Table ~~3-2~~3-3, below.~~:~~ [Safety Criterion 4.1-2, 4.1-3, 4.4-1, SRD] [Sections 4.3.1.1.1, 4.4.1.4.1, 4.4.2.1.1, 4.4.2.2.1, 4.4.2.3.1, 4.4.2.4.1, 4.4.2.5.1, 4.4.2.6.1, 4.4.2.7.1, 4.4.3.2.1, 4.4.4.1.1, 4.4.4.5.1, 4.4.4.6.1, 4.4.4.7.1, 4.4.5.1.1, 4.4.6.1.1, 4.4.6.3.1, Appendix M, HLW PDSA]~~3.4.1.1.5, 3.4.1.2.5, 3.4.1.7.2.5, 3.4.1.7.3.5, 4.3.7.1, 4.3.7.2, 4.3.7.3, 4.3.8, 4.3.15, 4.3.31, 4.4.4, 4.4.7, 4.4.16, 4.4.16.3, 4.4.23, 4.4.27.3, 4.4.30.3 PDSA - HLW Facility][Section 16.4.2.8, BOD].~~

~~**Note:** Safety instruments are addressed separately in Section 3.10.3.1.~~

Table 3-3 HCP/HFP Safety Classifications

Equipment/Component Description	Safety Function	Safety Classification	Reference
Melter Feed Seismic Interlock Final Elements	Mitigates the radiological and chemically hazardous process stream material consequences of a seismic event.	SC	Section 4.3.1.1.1, Appendix M, HLW PDSA
HFP Centrifugal Transfer Pumps Seismic Interlock Final Elements	Mitigates the radiological and chemically hazardous process stream material consequences of a seismic event.	SS	Section 4.3.1.1.1, Appendix M, HLW PDSA
C5 Confinement Boundary Valves on Piping Penetrations Equal to or Exceeding 4 Inches (GFR Feed Isolation Valve)	Mitigates the radiological and chemically hazardous process stream material consequences of a seismic event.	SS	Section 4.3.1.1.1, Appendix M, HLW PDSA
Joggles/Offsets	Mitigates the direct exposure consequences from a release of radioactive material.	SS	Section 4.4.1.4.1, Appendix M, HLW PDSA
HCP/HFP Coaxial Process Piping	Reduce the probability of a release of radioactive and chemically hazardous material by providing passive confinement of liquid.	SS	Section 4.4.2.1.1, Appendix M, HLW PDSA

Equipment/Component Description	Safety Function	Safety Classification	Reference
	Reduces the probability of an RLD vessel hydrogen explosion by preventing spills to the wet process cell (H-B014).	SS	Section 4.4.2.1.1, Appendix M, HLW PDSA
HCP/HFP Process Jumpers and Inline Components	Reduce the probability of a release of radioactive and chemically hazardous material by providing passive confinement of liquid	SS	Section 4.4.2.2.1, Appendix M, HLW PDSA
HFP Vessels (including overflow piping)	Reduce the probability of a release of radioactive and chemically hazardous material by providing passive confinement of liquid	SS	Section 4.4.2.3.1, Appendix M, HLW PDSA
	Reduce the probability of a hydrogen explosion in HFP vessel headspace.	SS	Section 4.4.2.3.1, Appendix M, HLW PDSA
HFP Vessel High Level Interlock	Reduce the probability of a vessel overfill resulting in a spill or exhaust path blockage by preventing the overfill level from being reached.	SS	Section 4.4.2.4.1, Appendix M, HLW PDSA
HFP Vessel Headspace Air Purge and Purge Piping	Reduce the probability of a hydrogen explosion in the vessel headspace.	SS	Section 4.4.2.5.1, Appendix M, HLW PDSA
HFP Vessel Agitators	Reduce the probability of hydrogen explosion in vessel headspace by mixing vessel contents to release trapped hydrogen and limiting the accumulation of hydrogen.	SS	Section 4.4.2.6.1, Appendix M, HLW PDSA
Sump Transfer Piping	Reduce the probability of a release of radioactive and chemically hazardous material by providing passive confinement of high-level process waste	SS	Section 4.4.2.7.1, Appendix M, HLW PDSA
Melter Plenum Pressure Interlock Final Elements	Mitigates the consequences of an offgas release by limiting the duration of the offgas release upon high melter plenum pressure	SS	Section 4.4.3.2.1, Appendix M, HLW PDSA
SBS Low-Level Interlock Final Elements	Reduces the probability of an unfiltered offgas release by protecting the HOP HEPA filters and carbon adsorber vessel from overheating	SS	Section 4.4.4.1.1, Appendix M, HLW PDSA
HOP HEPA Filter High Temperature Interlock Final Elements	Mitigates consequences of an offgas release by protecting the HOP HEPA filters and carbon adsorber vessel from over-temperature failure due to possible upstream component failures and by isolating feed to the melter	SS	Section 4.4.4.5.1, Appendix M, HLW PDSA
HOP HEPA Filter dP Interlock Final Elements	Mitigates consequences of an offgas release by protecting the HOP HEPA filter integrity (i.e., plugging or blowout)	SS	Section 4.4.4.6.1, Appendix M, HLW PDSA
HOP Secondary Offgas Loss of Vacuum Interlock Final Elements	Mitigates the consequences of an offgas release to occupied areas	SS	Section 4.4.4.7.1, Appendix M, HLW PDSA

Equipment/Component Description	Safety Function	Safety Classification	Reference
ASX Leak Detection Interlock Final Elements	Mitigates the consequences of a radioactive and chemically hazardous release in the ASX enclosure by detecting liquid in the enclosure and terminating recirculation	SS	Section 4.4.5.1.1, Appendix M, HLW PDSA
Piping Penetrations Through the C5 Boundary Greater than 4" Diameter Up to and Including the Isolation External to the C5 Zone (GFR Feed Pipes)	Mitigates the consequences of a release of radioactive and/or chemically hazardous material by providing filtered confinement ventilation from low contamination areas to higher contamination reas, through the point of release.	SS	Section 4.4.6.1.1, Appendix M, HLW PDSA
C5V HEPA Filter High dP Interlock Final Elements	Mitigates the consequences of a particulate or liquid aerosol release (feed spray leak) inside the C5 confinement boundary by isolating potential leak sources, thereby protecting the C5V HEPA filter boundary from excessive differential pressure (dP) that could compromise the cascade flow function of the C5V	SS	Section 4.4.6.3.1, Appendix M, HLW PDSA

~~Table 3-2 HCP and HFP Safety Designations~~

~~Equipment/ Component Description~~	~~Safety Function~~	~~Safety Class~~	~~Safety Significant~~	~~References~~	
				~~Safety Class~~	~~Safety Significant~~
~~HFP vessels (HFP-VSL-00001/00005/00002/00006)~~	~~SC: Mitigates the consequences of a hydrogen explosion in HFP-VSL-00001/00005 and HFP-VSL-00002/00006 by providing confinement of radioactive materials.~~ ~~Reduces the probability of a radioactive material release from HFP-VSL-00001/00005 or HFP-VSL-00002/00006 by providing confinement of waste during and after a seismic event.~~ ~~SS: Reduces the probability of a radioactive material release by providing confinement.~~	~~Yes~~	~~Yes~~	~~Section 4.3.7.1, PDSA – HLW Facility~~	~~Section 4.4.16, PDSA – HLW Facility~~
~~HFP vessel overflow feature~~	~~SC: Reduces the probability of an over pressurization by providing an exhaust path.~~ ~~Reduces the probability of a hydrogen explosion by providing an exhaust path should the HOP/PVV become unavailable.~~ ~~Reduces the probability of a hydrogen explosion by ensuring an adequate headspace volume to dilute hydrogen.~~ ~~SS: Reduces the probability of vessel over pressurization and failure by providing an exhaust path.~~	~~Yes~~	~~Yes~~	~~Section 4.3.7.3, PDSA – HLW Facility~~	~~Section 4.4.16.3, PDSA – HLW Facility~~
~~[**HOLD**] Glass former feed line isolation valve interlocks and air purge~~	~~SC: Reduces the probability of a facility worker being exposed to radioactive material by closing the glass former isolation valve upon indication of potential for loss of confinement.~~ ~~SS: Reduces the probability of radiological exposure to a facility worker by closing the glass former isolation valve upon indication of potential for loss of confinement.~~ ~~Reduces the probability of radiological exposure to a facility worker by purging the glass former feed line~~	~~Yes~~	~~Yes~~	~~Section 4.3.15, PDSA – HLW Facility~~	~~Section 4.4.23, PDSA – HLW Facility~~

~~Table 3-2 HCP and HFP Safety Designations~~

~~Equipment/ Component Description~~	~~Safety Function~~	~~Safety Class~~	~~Safety Significant~~	~~References~~	
				~~Safety Class~~	~~Safety Significant~~
~~[**HOLD**] Hydrogen mitigation system (air sparging)~~	~~Reduces the probability of a hydrogen explosion in vessels HFP-VSL-00001/00005 or HFP-VSL-00002/00006 by mixing the waste upon failure of an agitator.~~	~~Yes~~	~~No~~	~~Section 4.3.8, PDSA – HLW Facility~~	~~N/A~~
~~[**HOLD**] Hydrogen mitigation system (air purging)~~	~~Reduces the probability of a hydrogen explosion in vessels HFP-VSL-00002/00006 or HFP-VSL-00001/00005 by providing safety purge air on loss of normal purge air.~~	~~Yes~~	~~No~~	~~Section 4.3.8, PDSA – HLW Facility~~	~~N/A~~
~~Air amplifier system~~	~~Reduces the probability of radioactive material spreading to C2 or C3 zones by drawing the HFP-VSL-00001/00005 and HFP-VSL-00002/00006 headspace atmospheres into the melter cave following a seismic event.~~	~~Yes~~	~~No~~	~~Section 4.3.7.2, PDSA – HLW Facility~~	~~N/A~~
~~[**HOLD**] MFPVs (HFP-VSL-00001/00005) High-high liquid level feed diversion valve interlock~~	~~Reduces the probability of the MFPVs (HFP-VSL-00001/00005) being overfilled by terminating feed transfer to the vessel when the high-high level setpoint is exceeded.~~	~~No~~	~~Yes~~	~~N/A~~	~~Sections 4.4.4, 3.4.1.2.5, PDSA – HLW Facility~~
~~Piping (including jumpers and inline components):~~ ~~o Piping from MFPVs (HFP-VSL-00001/00005) to the autosampler enclosure~~ ~~o Piping from MFPVs (HFP-VSL-00001/00005) to MFVs (HFP-VSL-00002/00006)~~ ~~o Piping from MFVs (HFP-VSL-00002/00006) to the autosampler enclosure~~ ~~o Piping from MFVs (HFP-VSL-00002/00006) to the melters~~ ~~o Flapper valves on the HFP overflows (overflows with flapper valves are SC)~~ ~~o Secondary offgas piping~~ ~~• Note: Service and cooling piping lines are not SS.~~	~~Reduces the probability of a facility worker receiving an exposure that exceeds exposure standards.~~ ~~Reduces the probability of a radioactive material release by providing confinement.~~ ~~The piping/tubing in contact with waste (including safety air tubing as applicable) reduces the probability of a failure by providing confinement during and after multiple hydrogen explosions.~~	~~No~~	~~Yes~~	~~N/A~~	~~Sections 3.4.1.1.5, 4.4.7, 4.4.27, PDSA – HLW Facility~~
~~Coaxial piping (SC inner coaxial piping and SS outer coaxial piping)~~	~~Reduces the probability of a facility worker receiving an exposure that exceeds exposure standards.~~	~~Yes~~	~~Yes~~	~~Section 4.3.31~~	~~Section 4.4.7.2~~

~~Table 3-2 HCP and HFP Safety Designations~~

~~Equipment/ Component Description~~	~~Safety Function~~	~~Safety Class~~	~~Safety Significant~~	~~References~~	
				~~Safety Class~~	~~Safety Significant~~
~~o HLW concentrate receipt piping for transfers from the PT Facility~~ ~~o Melter cave cross-connect piping~~	~~SC: Inner Pipe prevents a release of a radioactive and chemically hazardous material release by providing primary confinement.~~ ~~SS: Outer Pipe prevents a release of a radioactive and chemically hazardous material release by providing secondary confinement.~~ ~~The piping/tubing in contact with waste (including safety air tubing as applicable) reduces the probability of a failure by providing confinement during and after multiple hydrogen explosions.~~ ~~The coaxial pipe prevents the introduction of non-Newtonian waste solution into RLD-SUMP-0001. Preventing non-Newtonian waste from entering RLD precludes a hydrogen explosion in RLD-VSL-00008.~~				
~~ADS pumps and discharge lines~~	~~Reduces the probability of a release by providing confinement during a hydrogen explosion.~~	~~No~~	~~Yes~~	~~N/A~~	~~Section 4.4.27.3 PDSA – HLW Facility~~
~~Mechanical agitators~~	~~Reduces the probability of a radioactive material release by agitator being designed so failure resulting in vessel impact will not breach the vessel.~~	~~No~~	~~Yes~~	~~N/A~~	~~Section 4.4.16.2.1, PDSA - HLW Facility~~

Basis Discussion: To ensure safety SSCs meet the design functions, Safety Criterion 4.4-1 of ~~the~~ 24590-WTP-SRD-ESH-01-001-02, *Safety Requirements Document Volume II* (SRD) states: "Safety structures, systems, and components designated as SC and SS shall be designed and qualified to function as intended in the environments associated with the events for which they are intended to respond." ~~The portions of this requirement on hold are the Glass former feed line isolation valve, Hydrogen mitigation system (air sparging), and the MFPV high liquid level feed diversion valve interlock. The sparger design is on "[**HOLD**]" due to differences between 24590-HLW-PL-ENS-13-0001, Safety Design Strategy for the High-Level Waste Facility (SDS), and the PDSA - HLW Facility and the resolution is expected to eliminate sparging. The MFPV high liquid level interlock is on hold due to differences between the SDS and PDSA for how the interlock is actuated. Also, the glass former feed line isolation valve interlock designation requirement is on [**HOLD**] due to designation as both SC and SS but not meeting single failure criteria (see Sections 3.10.2.1.1 and 3.10.2.2.2). Designation of the GFR isolation valve as SC is not required to protect the facility worker.~~
[ALARA]

Verification: Verification is expected to be achieved through the following:

Verif. Method	Verif. By	Plan	Notes/Comments
R	**ENG**	Review ~~of~~ the design to verify ~~safety designations as identified in the equipment qualification datasheet~~the HCP/HFP system components listed in Table 3-3 are classified as SS or SC.	~~EQP is issued and verified to align with the PDSA/DSA. Review is expected to be joint effort between design agency and EQ group.~~

3.4.2.2 Tank System Secondary Containment

Requirement: The portions of the HCP/HFP system regulated as tank systems and ancillary equipment shall be designed with secondary containment, except for those portions of the system that serve as secondary containment (WAC 173-303-640[4][d][i] through [iv]). [Section III.10.C.16.a, DWP] [Sections 11.6.9, 14.10.1.2, 14.10.1.3, BOD]

Basis Discussion: Tank systems in the HLW Facility are subject to the requirements of the Washington Administrative Code (WAC). Examples of secondary containment for tank systems include liners, vaults, double-walled tanks, and other Ecology-approved devices. Ancillary equipment means any device (e.g., piping, fittings, flanges, valves, and pumps) used to distribute, meter, or control the flow of dangerous waste from its point of generation to a tank system, between dangerous waste storage tanks, or to a point of disposal or shipment offsite. Examples of secondary containment for ancillary equipment includes trench jacketing and coaxial piping. [ALARA]

Verification: Verification is expected to be achieved through the following:

Verif. Method	Verif. By	Plan	Notes/Comments
R	**ENG**	Review the design to verify portions of the HCP/HFP system regulated as tank systems and ancillary equipment are provided with secondary containment.	

3.4.2.3 Tank System Vapor Confinement

Requirement: The portions of the HCP/HFP system regulated as tank systems shall be designed to prevent the escape of vapors, fumes, or other emissions into the air if the tank holds materials that are acutely or chronically toxic by inhalation (WAC 173-303-640[5][e]). [Section 14.10.1, BOD]

Basis Discussion: Tank systems in the HLW Facility are subject to the requirements of the Washington Administrative Code. [ALARA]

Verification: Verification is expected to be achieved through the following:

Verif. Method	Verif. By	Plan	Notes/Comments
R	ENG	Review the design to verify portions of the HCP/HFP system regulated as tank systems are designed to prevent the escape of vapors, fumes, or other emissions into the air if the tank holds materials that are acutely or chronically toxic by inhalation.	

3.4.2.4 Seismic Design

Requirement: The HCP/HFP system equipment shall be designed and qualified for seismic conditions in accordance with Table 3-4 below. This equipment shall be designed using revised ground motion (RGM) or WTP Site-Specific Ground Motion (WSGM). [Sections 4.3.1.1.4, 4.4.1.1.4, 4.4.2.3.4, 4.4.2.5.4, 4.4.2.6.3, 4.4.2.7.3, 4.4.6.1.4, Appendix M, HLW PDSA] [Sections 4.4.1, 16.4.2.7, Appendix B, BOD]

Table 3-4 HCP/HFP System Seismic Design Categories

Description	Seismic Category	Reference
Melter Feed Seismic Interlock Final Elements	SC-I	Sections 4.3.1.1.4, 4.4.1.1.4, Appendix M, HLW PDSA
HFP Centrifugal Transfer Pumps Seismic Interlock Final Elements	SC-I	Section 4.3.1.1.4, 4.4.1.1.4, Appendix M, HLW PDSA
C5 Confinement Boundary Valves on Piping Penetrations Equal to or Exceeding 4 Inches (GFR Feed Lines)	SC-I	Section 4.3.1.1.4, 4.4.1.1.4, Appendix M, HLW PDSA
Joggles/Offsets	SC-III	Appendix M, HLW PDSA
HCP/HFP Coaxial Process Piping from the HLW Facility Penetration to the Melter Cave Wall Box, Including Melter Cave Cross-Connect Piping	SC-III	Appendix M, HLW PDSA
HCP/HFP Process Jumpers and Inline Components	SC-III	Appendix M, HLW PDSA
HFP Vessels (including overflow piping)	SC-I	Section 4.4.2.3.4, Appendix M, HLW PDSA
HFP Vessel High Level Interlock	SC-III	Appendix M, HLW PDSA
HFP Vessel Headspace Air Purge and Purge Piping	SC-I	Section 4.4.2.5.4, Appendix M, HLW PDSA
HFP Vessel Agitators	SC-III	Section 4.4.2.6.3, Appendix M, HLW PDSA
Sump Transfer Piping	SC-III	Section 4.4.2.7.3, Appendix M, HLW PDSA
Melter Plenum Pressure Interlock Final Elements	SC-III	Appendix M, HLW PDSA
SBS Low-Level Interlock Final Elements	SC-I	Appendix M, HLW PDSA
HOP HEPA Filter High Temperature Interlock Final Elements	SC-III	Appendix M, HLW PDSA
HOP HEPA Filter dP Interlock Final Elements	SC-III	Appendix M, HLW PDSA

Description	Seismic Category	Reference
HOP Secondary Offgas Loss of Vacuum Interlock Final Elements	SC-III	Appendix M, HLW PDSA
ASX Leak Detection Interlock Final Elements	SC-III	Appendix M, HLW PDSA
Piping Penetrations Through the C5 Boundary Greater than 4" Diameter Up to and Including the Isolation External to the C5 Zone (GFR Feed Pipes)	SC-I	Section 4.4.6.1.4, Appendix M, HLW PDSA
C5V HEPA Filter High dP Interlock Final Elements	SC-I	Appendix M, HLW PDSA
Piping in Black Cells	SC-I	Section 16.4.2.7, BOD
Post-Accident Monitoring (PAM) instruments	Seismic category designations per PAM report*	Safety Criterion 4.3-4, SRD

*24590-HLW-RPT-ENS-12-002, *HLW Preliminary Post Accident Monitoring Report*

Basis Discussion: Section 2.4.12 of 24590-WTP-PSAR-ESH-01-002-01, *Preliminary Documented Safety Analysis to Support Construction Authorization; General Information* states the following: "All components and parts of the equipment that provide or contribute to the safety functions and accident monitoring functions, including equipment supports and anchorage, shall be qualified accordingly." This qualification ensures SSCs meet the designated seismic design requirements. The SRD, Safety Criterion 4.1-3 details the equivalence of the WTP seismic category to the seismic performance category of DOE-STD-1020-94, *Natural Phenomena Hazards Design and Evaluation Criteria for Department of Energy Facilities*. The SRD also states that SSCs designated as safety SSCs be designed to withstand the effects of natural phenomena hazard (NPH) events (e.g., earthquakes, wind, and floods) without loss of capability to perform specified safety functions.

Verification: Verification is expected to be achieved through the following:

Verif. Method	Verif. By	Plan	Notes/Comments
A/T	ENG/ SUP	Perform an analysis or supplier testing on equipment listed in Table 3-4 to verify the capability to withstand a seismic event.	
R	ENG	Review the design to verify conformance to the as-tested/as-analyzed configuration.	

3.4.2.5 Seismic Design for Interaction Effects

Requirement: Interaction effects shall be considered when determining the seismic category of individual items and, where an adverse seismic interaction with SC or SS components exists, adequate measures shall be taken to preclude the adverse interaction. The HCP/HFP system shall use either RGM or WSGM for evaluating seismic interactions between SC-III/SC-IV sources and SC-I and SC-II targets. [Section 10.2.15, Appendix B, BOD] [Criterion 4.1-3, SRD]

Basis Discussion: Equipment that is non-safety may be identified as having a potential for adverse interaction with safety equipment during a seismic event in accordance with 24590-WTP-GPG-ENG-033, *Evaluation for Seismic Interaction Effects*. Where a resolution strategy is selected to increase the seismic category of the source SSC to protect the safety (target) SSC, the resulting seismic category of the equipment may be greater than SC-IV. In those cases, the equipment design is verified to meet the higher seismic performance category such that the target SSC is protected.

Verification: Verification is expected to be achieved through the following:

Verif. Method	Verif. By	Plan	Notes/Comments
A/T	ENG/ SUP	Perform an analysis or supplier testing on SSCs to verify the ability to withstand the seismic loadings for their respective seismic categories to the extent necessary to prevent interactions.	
R	ENG	Review design of the HCP/HFP system to verify seismic categorization of equipment based on interaction effects per 24590-WTP-GPG-ENG-033.	

3.4.3 System Interface Requirements

None.

~~Requirements associated with specific system interfaces are discussed in the subsequent requirement sections titled "System Interface Requirements." The HCP and HFP system interfaces are listed in Table 3-3.~~

~~**Table 3-3 HCP and HFP System Interfaces**~~

~~System Locator~~	~~System Name~~	~~Nature of Interface~~
~~ASX~~	~~Autosampling System~~	~~ASX-SMPLR-00029 and ASX-SMPLR-00042 receive samples from MFPVs to characterize the batch waste.~~
~~C5V~~	~~C5 Ventilation System~~	~~Provides ventilation of the melter cave to remove headspace gas vented by the HFP vessel air amplifiers or overflow features when the HOP/PVV is unavailable.~~
~~DIW~~	~~Demineralized Water System~~	~~Supplies demineralized water via ASX and PWD to MFPVs and MFVs for D&D washdowns and concentrate dilution, to flush transfer lines and spargers, to prime sample/transfer, and to flush ADS pumps.~~
~~GFR~~	~~Glass Formers Reagent System~~	~~GFR-TK-00025 and GFR-TK-00031 supply glass formers to MFPVs.~~
~~HCP~~	~~HLW Concentrate Receipt Process System~~	~~Supplies HLW concentrate to MFPVs from PT-HLP.~~
~~HFP~~	~~HLW Melter Feed Process System~~	~~Receives feed concentrate from HCP.~~
~~HLP~~	~~HLW Lag Storage and Feed Blending Process System~~	~~HLP-VSL-00028 supplies HLW concentrate to MFPVs via PT-HLP and HCP transfer piping.~~
~~HMP~~	~~HLW Melter Process System~~	~~HMP-MLTR-00001 and HMP-MLTR-00002 receive melter feed from MFVs.~~
~~HOP~~	~~HLW Primary Offgas System~~	~~Negative headspace pressure is maintained in the HFP vessels by the PVV and HOP systems.~~
~~HPS~~	~~High Pressure Steam System~~	~~Supplies steam to the steam ejectors in the HFP vessels.~~
~~HSH~~	~~HLW Melter Cave Support Handling System~~	~~Provides mechanical handling components used to remotely remove and replace all maintainable or replaceable HFP equipment and components within the melter caves.~~

~~**Table 3-3 HCP and HFP System Interfaces**~~

~~System Locator~~	~~System Name~~	~~Nature of Interface~~
~~ISA/ Safety ISA~~	~~Instrument Service Air System~~	~~The safety ISA provides air for vessel sparging/purging, GFR line purging, air supply to the air amplifiers (when activated), as well as motive force to operate pneumatically operated safety valves. (These functions may be supported by non-safety ISA but must transition to safety ISA upon loss of the non-safety source)~~ ~~The non-safety ISA supplies instrument air to non-safety HFP instruments, control valves, and ADS pumps.~~
~~LVE~~	~~Low Voltage Electrical System~~	~~Supplies electrical power to the HFP equipment and instruments.~~
~~NAR~~	~~Nitric Acid Reagent System~~	~~Supplies nitric acid reagent for decontamination activities.~~
~~PCJ~~	~~Process Control System~~	~~Provides operational monitoring and control of the process and equipment. Components without SC/SS functions are controlled from the PCJ.~~
~~PCW~~	~~Plant Cooling Water System~~	~~Supplies cooling water to the HFP vessel cooling jackets.~~
~~PPJ~~	~~Programmable Protection System~~	~~Provides automatic safety control functions.~~
~~PVV~~	~~Process Vessel Vent Exhaust System~~	~~Vessel vent header receives vents from MFPVs and MFVs. Negative headspace pressure is maintained in the HFP vessels by the PVV and HOP systems.~~
~~PWD~~	~~Plant Wash and Disposal System~~	~~Supplies demineralized water to HFP vessels for washdowns, concentrate dilution, to prime sample/transfer pumps. The PT Facility's PWD-VSL-00043 receives flush water from the HLW concentrate transfer line from PT HLP to MFPV.~~
~~RLD~~	~~Radioactive Liquid Waste Disposal System~~	~~RLD-VSL-00008 receives D&D washdowns MFPVs and MFVs.~~
~~UPE~~	~~Uninterruptible Power Electrical System~~	~~Supplies emergency back-up power for Safety SSCs requiring electrical power. This includes the feed transfer diversion interlock and the PPJ control functions for air amplification and hydrogen mitigation.~~

3.4.4 Other Technical, Specialty, Operations and Maintenance Requirements

3.4.4.1 Remotely Maintainable or Replaceable Equipment and Components

Requirement: HCP/HFP system equipment and instruments in remotely maintained areas (not including black cells) shall be designed to be remotely removable, replaceable, and maintainable to achieve a 40-year design life. ~~The HFP maintainable or replaceable equipment and components shall be designed with remote handling features capable of being removed and re-installed via interface with the HLW melter cave support handling system (HSH), as shown in Table 3-4.~~ [Section~~s~~ 5.2, ~~6.2, 8.1.3, 9.1, 14.1, 14.2, 14.10,~~ ORD] [Section~~s~~ ~~6.7, 8.1.2, 9.12, 9.4.2, 11.3.2, 11.3.2.3,~~ 11.4.1, ~~11.4.4, 11.5.1, 11.7.4, 11.8.3.1, 12.6.3,~~ BOD]~~.~~

~~**Table 3-4 Remotely Maintainable or Replaceable Equipment and Components**~~

~~Equipment/Component Description~~	~~Remotely Removable and Replaceable~~
~~MFPVs~~	~~Yes~~
~~MFVs~~	~~Yes~~
~~Mechanical Agitators~~	~~Yes~~

~~**Table 3-4 Remotely Maintainable or Replaceable Equipment and Components**~~

~~Equipment/Component Description~~	~~Remotely Removable and Replaceable~~
~~Sample/Transfer Pumps~~	~~Yes~~
~~ADS Pumps~~	~~Yes~~
~~Demisters~~	~~Yes~~
~~Air Amplifiers~~	~~Yes~~
~~Steam Ejectors~~	~~Yes~~
~~Overflow Feature/Flapper Valves~~	~~Yes~~
~~Jumpers (Mechanical, Instrument Air, and Electrical)~~	~~Yes~~
~~Inline Components (valves/instruments)~~	~~Yes*~~

~~*This may be accomplished by removing and replacing the jumper section including the inline component (valve/instrument).~~

Basis Discussion: ~~Remote maintenance operations generally are to be performed in the designated maintenance area. In-cave equipment disassembly, removal to maintenance area, and/or replacement is accomplished by local remote handling equipment or by remote handling equipment in dedicated maintenance areas or caves. In general, process systems and equipment within cells or caves that could fail during operations are designed for safe recovery, replacement, or redundancy. Remote handling features help to facilitate interfacing with equipment or components when using remote handling equipment such as in-cave cranes, power manipulators, or master-slave manipulators.~~There should be an engineered method for the removal of equipment from cells, caves, and bulges (except for black cells), taking into consideration containment and radiation control.

[ALARA]

Verification: Verification is expected to be achieved through the following:

Verif. Method	Verif. By	Plan	Notes/Comments
R	**ENG**	Review the design of HCP/HFP system equipment in remotely maintained areas (not including black cells) to verify it is designed to be remotely removable, replaceable, and maintainable.~~Review of design using a software program to verify that all replaceable components are remotable.~~	~~May be documented in an assessment/evaluation.~~ ~~Recommend using a software program such as "IGrip" (or similar).~~
~~**T**~~	~~**SU/ COM**~~	~~Demonstrate remotability in accordance with 24590-WTP-PL-RACT-RT-0001, *WTP Remotability Verification Plan*.~~	~~Physical demonstration~~

3.4.4.2 ~~Redundancy~~Deleted

~~**Requirement:** The system design shall incorporate redundant waste transfer capability necessary to achieve the throughput glass production rate. The HFP design shall include a coaxial cross-connection between the two melter trains that allows contents from the MFPV or MFV in one melter train to be transferred to the corresponding vessel in the other melter train. [Sections 6.3.3, 11.3.2, 11.4.2, BOD] [Section 14.3, ORD][Sections 4.3.31, 4.4.7.2, PDSA- HLW Facility] (F.1).~~

~~**Basis Discussion:** This requirement is decomposed from the BOD and ORD requirements to provide redundancy. The HFP/HCP piping has been designed to incorporate redundancy for process flows. The implementation of a melter feed cross-connection allows additional flexibility and supports a feed-forward strategy (refer to Section 4.1.1, 24590-HLW-TB-ENG-13-0002, *Engineering Design Decision for HLW HFP*). In general, process systems and equipment within cells or caves that could fail during operations are designed for safe recovery, replacement,~~

~~or redundancy. The need for redundancy has been evaluated in the basis of performing a failure modes, effects, and criticality analysis. [ALARA]~~

~~**Verification:** Verification is expected to be achieved through the following:~~

~~Verif. Method~~	~~Verif. By~~	~~Plan~~	~~Notes/Comments~~
~~R~~	~~ENG~~	~~Review of the design to verify the capability exists to transfer HFP vessel contents between the respective MFPVs and MFVs in both melter trains.~~	

3.4.4.3 ~~Redundant Waste Transfer Supply and Flush~~Moved to 3.6.1.3.4

~~**Requirement:** The design shall provide an alternate flush method from the HLW Facility to the PT Facility to support a single PT to HLW waste transfer line configuration. [Sections 6.2.1, 11.3.2, 11.4.2, BOD] [Sections 14.3, 20.0, ORD] (B.1).~~

~~**Basis Discussion:** During normal operations, each MFPV has 2 dedicated lines which permit transfer of concentrated waste from the PT facility to the HLW MFPVs through 1 of the 2 dedicated transfer lines. Following a normal transfer, a flush is sent, from the PT facility, into the MFPV through the same dedicated transfer line. Following a valve reconfiguration, additional flushing from PT is directed towards the HLW facility through the first transfer line but recirculates back to PT through the second dedicated transfer line. The second dedicated transfer line is primarily used for flush return to the PT facility.~~

~~In the event that the first dedicated transfer line is lost (plugging or other failure mode) the secondary transfer line is reconfigured to transfer waste from the PT facility to the MFPV. Following waste transfer, only initial flushes may enter the MFPV due to batch volume constraints. As directed by this requirement, remaining flushes will be directed from the HLW facility back to the PT facility since the normal recirculating flush capability will be lost.~~

~~Flushing controls of the transfer line will help to remove waste and prevent plugging (refer to Section 4.1.4 of 24590-HLW-TB-ENG-13-0002 and Section 4.10.3 of 24590-HLW-ES-ENG-13-003, *Risk Reduction Study for the High Level Waste (HLW) Facility: Failure Modes, Effects, and Criticality Analysis (FMECA), In-Service Inspection (ISI), and Plugging*).~~

~~[ALARA]~~

~~**Verification:** Verification is expected to be achieved through the following:~~

~~Verif. Method~~	~~Verif. By~~	~~Plan~~	~~Notes/Comments~~
~~R~~	~~ENG~~	~~Review of the design to verify redundant transfer capability of HLW concentrate from the PT Facility HLP to the HLW MFPV.~~	
~~R~~	~~ENG~~	~~Review of the design to verify the capability to flush the HLW concentrate transfer lines from the HLW Facility to the PT Facility, using water from the HLW Facility.~~	
~~T~~	~~SU/COM~~	~~Demonstrate the capability to flush the HLW concentrate transfer lines from the HLW Facility to the PT Facility, using water from the HLW Facility.~~	

3.4.4.4 ~~Prevent Out-of-Specification Batch Transfers to RLD System~~Deleted

~~**Requirement:** The piping design shall include provisions to prevent out-of-specification batch transfers from the HFP vessels to the RLD system. Transfers from the HFP vessels to the RLD system shall only be permitted for vessel decommissioning purposes and normal vessel washings shall be processed forward to the melters using a feed-forward strategy. [Section 7.1, ORD] (H.1).~~

~~**Basis Discussion:** The HFP design will accommodate a feed-forward operational strategy and include design features to impede transfers of hydrogen generating waste to the RLD system. Section 5.6.35 of 24590-WTP-PSAR-ESH-01-002-04, *Preliminary Documented Safety Analysis to Support Construction Authorization; HLW Specific Information* (PDSA – HLW Facility) states the following: "Steam supply to the HFP vessel steam ejectors is isolated (i.e. welded end connections) so that there is no connection between there ejectors and the steam supply." The design no longer allows transferring out-of-specification batches from the HFP vessels to the RLD during plant operations to remove a non-Newtonian hydrogen generation source to the RLD. The steam ejector and jumpers are only to be installed after decontaminating the HFP vessels, which requires the ability to minimize the residual heel volume and transfer the rinse/flush liquid to the RLD. In addition, removal of the normal transfer path of HFP streams to RLD (and back to PT) required by section 7.1 of the ORD has been evaluated as acceptable in accordance with exemption 24590-WTP-ORDX-OP-15-0037. The ORD exemption was documented as required by CR-24590-WTP-GCA-MGT-15-01057. [ALARA]~~

~~**Verification:** Verification is expected to be achieved through the following:~~

~~Verif. Method~~	~~Verif. By~~	~~Plan~~	~~Notes/Comments~~
~~R~~	~~ENG~~	~~Review of the design to verify that the steam ejector and jumpers, used to support transfers from the HFP vessels to the RLD, are not normally installed and include a welded end connections.~~	
~~R~~	~~ENG~~	~~Review of the design to verify out-of-specification waste may be processed by the melters utilizing a feed-forward operational strategy.~~	

3.4.4.5 Provisions for Startup ~~Testing~~ and Commissioning

Requirement: The ~~system~~ design of the HCP/HFP system shall ~~accommodate~~ include provisions, as necessary, to support startup and commissioning testing ~~as identified in Appendix A~~. [Section 11.4.7, ~~11.5.1,~~ BOD] [Section 19.12~~9.1~~, ORD]~~.~~

Basis Discussion: Additional nozzles, branch lines, removable spools or other provisions needed to support identified testing are to be accommodated in the design, as jointly determined by the design agency, Startup and Commissioning during the design development and review process, with consideration given to the tests and demonstration activities required for requirement verification specified in Appendix A. This may include, but is not limited to, provisions to support the introduction or removal of fluids, gases, reagents or simulants; or the availability of special test ports, sampling ports, or temporary instruments or instrument lines.

[ALARA]

Verification: Verification is expected to be achieved through the following:

Verif. Method	Verif. By	Plan	Notes/Comments
~~A~~	~~ENG~~	~~Perform an analysis of the HLW HFP/HCP system to determine the provisions needed to support tests/demonstrations to be performed during startup and commissioning.~~	~~May be documented in an assessment/evaluation. Startup and Commissioning to participate in the assessment.~~
R	ENG	Review the design to verify provisions in the design account for tests/demonstrations to be performed during startup and commissioning.	~~May be documented in an assessment/evaluation report. Startup and Commissioning to participate in the assessment.~~

3.4.4.6 ~~MFPV Sump Transfer Route~~Deleted

~~**Requirement:** [**HOLD**] The HFP system design shall incorporate features to receive and reprocess recovered spilled material from sumps HOP-SUMP-00003/00008, HPH-SUMP-00003/00004, HCP-SUMP-00001, HSH-SUMP-00003/00007, and HFP-SUMP-00002/00005. (A.1, A.1.1).~~

~~**Basis Discussion:** The sump transfer route was developed due to concerns with Non-Newtonian waste entering the RLD system and accumulation of hydrogen gases which could cause a hydrogen explosion. PDSA- HLW Facility Section 3.3.3.6.1, RLD Hazards Analysis, states "sump transfer route- prevents an H_2 explosion in the RLD-VSL-00008 by removing all routes of adding non-Newtonian waste." As such, the HFP vessel sumps were re-routed from RLD to the MFPVs. This requirement and design associated with sump transfers into the HFP process stream are on [**HOLD**] pending PDSA incorporation of section 4 requirements to prevent high solids waste in sumps from being sent to the RLD system. [ALARA]~~

~~**Verification:** Verification is expected to be achieved through the following:~~

~~Verif. Method~~	~~Verif. By~~	~~Plan~~	~~Notes/Comments~~
~~R~~	~~ENG~~	~~Review design to verify the capability exists to transfer recovered spilled material from the sumps HOP-SUMP-00003/00008, HPH-SUMP-00003/00004, HCP-SUMP-00001, HSH-SUMP-00003/00007, and HFP-SUMP-00002/00005.~~	~~May be documented in an assessment/evaluation.~~

3.4.4.7 Equipment Tolerances

Requirement: Systems and equipment requiring remote installation and maintenance shall have tolerances specified in their design and be as-built with sufficient precision to provide for the ability to remotely install, connect, disconnect, and reconnect all replaceable components. [Section 14.10, ORD]~~.~~

Basis Discussion: As-builts of remote equipment and permanent plant interfaces for the remote equipment provide the ability to remotely install, connect, disconnect, and reconnect all replaceable components.

Verification: Verification is expected to be achieved through the following:

Verif. Method	Verif. By	Plan	Notes/Comments
R	ENG	Review the design to verify the HFP systems and equipment requiring remote installation and maintenance have tolerances specified in their design and be as-built with sufficient precision to provide for the ability to	~~Accomplished during review of submitted G-321-E documents~~

Verif. Method	Verif. By	Plan	Notes/Comments
		remotely install, connect, disconnect, and reconnect all replaceable components.~~Review supplier fabrication and installation drawings to verify compliance with dimensions and tolerances specified in the purchase order~~	
~~I~~	~~SQR~~	~~Inspect equipment to verify dimensions conform to the provided as-built drawings (within established tolerances).~~	~~This is expected to be accomplished via the MAP.~~
~~I~~	~~CON~~	~~Take as-built measurements of installed equipment and verify compliance with dimensions and tolerances specified in supplier installation drawings and manuals~~	~~Record in equipment inspection record.~~

3.4.4.8 Sealed for Life Components

Requirement: Permanently lubricated, sealed for life components shall be used in the HFP system wherever possible in order to reduce maintenance requirements. [Section 9.1, ORD]

Basis Discussion: The use of permanently lubricated, sealed for life components ensures that the need for maintenance is minimized, which supports maintaining facility worker exposure levels ALARA. [ALARA]

Verification: Verification is expected to be achieved through the following:

Verif. Method	Verif. By	Plan	Notes/Comments
R	ENG	Review the design to verify permanently lubricated, sealed for life components are provided in the HCP/HFP system wherever possible.	

3.4.4.9 Equipment in Enclosures

Requirement: HFP system equipment requiring maintenance (such as process isolation valves, pumps, and instruments) that comes into contact with the radioactive process fluids shall be housed in enclosures that resist the gradual buildup of contamination and are easily decontaminated. [Section 14.1, ORD] [Section 11.3.2.7, BOD]

Basis Discussion: Equipment enclosures minimize facility worker exposure levels. [ALARA]

Verification: Verification is expected to be achieved through the following:

Verif. Method	Verif. By	Plan	Notes/Comments
R	ENG	Review the design of the HFP system to verify that equipment requiring maintenance that comes into contact with the radioactive process fluids is located in enclosures that resist the gradual buildup of contamination and are easily decontaminated, and have installed flushing capability and drains.	

3.4.4.10 Equipment Location in Hot Cells

Requirement: HFP system equipment that comes into contact with process streams with a high solids content shall be located in maintainable hot cells using remotely operated jumpers. [Section 10.4, ORD]

Basis Discussion: Equipment coming into to contact with waste streams containing a high solids content is located in maintainable areas due to plugging concerns. [ALARA]

Verification: Verification is expected to be achieved through the following:

Verif. Method	Verif. By	Plan	Notes/Comments
R	ENG	Review the design of the HFP system to verify that equipment coming into contact with process streams with a high solids content is located in maintainable hot cells using remotely operated jumpers.	

3.4.4.11 Fail Safe Equipment

Requirement: HCP/HFP system in-cell and in-cave equipment shall be designed to fail safely. [Section 11.4.1, BOD] [Section 14.8, ORD]

Basis Discussion: HCP/HFP system equipment is designed to fail safe to mitigate potential hazards associated with the failure of the normal control system.

Verification: Verification is expected to be achieved through the following:

Verif. Method	Verif. By	Plan	Notes/Comments
R	ENG	Review the design of the HCP/HFP system equipment to verify it is designed to fail to a safe state.	

3.5 Vessel Requirements

3.5.1 Mission and Functional / Performance Requirements (Including States/Modes)

3.5.1.1 Vessel Design and Operating Conditions

3.5.1.1.1 ~~Size (Batch Volume Capacity)~~Deleted

~~**Requirement:** The HFP vessels shall each be designed for a minimum batch volume to support 100% capacity melter throughput for glass production of 3.75 metric tons of glass (MTG)/day/melter (total of 7.5 MTG per day). The stated vessel maximum capacities in the Dangerous Waste Permit shall be aligned with the maximum capacities of the procured vessels. [Section 6.3.3, BOD] [Section C.7(b)(3), No. DE-AC27-01RV14136] [Section C.6 - Standard 3: (c)(4), No. DE-AC27-01RV14136](A.1, A.2, M.1.1).~~

~~**Basis Discussion:** The design throughput (processing) capabilities for the HCP and HFP systems are defined in Section 6.3.3 of the BOD. Software models are used to validate the design throughput capacity is met by the designed systems, inclusive of treatment processes, individual system and component capabilities, and equipment reliability and maintainability inputs. The HFP is designed to accommodate the receipt and treatment of specific waste volumes, using batch processing capabilities, to meet the design throughput requirements. The throughput rates are a function of the feed characteristics in a given batch volume. Batch volume and nominal transfer rate are used as inputs in the overall throughput analysis to ensure HCP and HFP systems operations are designed to support the 100 % capacity melter throughput for glass production of 3.75 metric tons of glass (MTG)/day/melter (total of 7.5 MTG per day), as stipulated in the WTP Contract. As stated in the BOD, the 5,500 gallon HFP vessel~~

~~design batch volume is a key design feature assumed in modeling and ORP concurrence is required before the capability can be reduced in design.~~

~~The maximum batch volume of 5500 gal will allow for at least 300 gal of reserve volume for adjusting the batch composition using additional glass formers (up to 3800 pounds) (refer to Section 8.1 of 24590-HLW-ES-PR-04-0001, *HLW Melter Feed and Feed Preparation Vessel Utilization and Time Cycle Evaluation*). The vessel sizing calculation is required per WTP Contract, Section C - Standard 3: (c)(4), which states, "Calculations for Equipment Sizing: The calculation and technical basis for the capacity of major vessels, equipment, and piping shall be provided."~~

~~**Verification:** Verification is expected to be achieved through the following:~~

~~Verif. Method~~	~~Verif. By~~	~~Plan~~	~~Notes/Comments~~
~~A~~	~~ENG~~	~~Perform an analysis of the HFP vessels to determine the minimum batch volume required to satisfy facility throughput.~~	
~~R~~	~~ENG~~	~~Review of design to verify conformance to the results of the analysis.~~	
~~R~~	~~ENG~~	~~Review design to verify vessel maximum capacities conform to the stated values in the permit.~~	~~Verification must preceded receipt of waste.~~

3.5.1.1.2 ~~Temperature~~Deleted

~~**Requirement:** The HFP vessel design shall provide the capability to maintain the process fluid temperature between the vessel upper and lower design temperature limit and/or upper temperature limit established to preclude cavitation in the sample/transfer pumps. [Sections 6.1, 6.4, BOD](M.1.1).~~

~~**Basis Discussion:** The HFP vessels are cooled to achieve required processing conditions by removing heat generated from the radioactive decay of the vessel contents and mechanical agitator shaft work. Section 6.4 of the BOD states the secondary cooling loop is provided to equipment in contact with radioactive material.~~

~~**Verification:** Verification is expected to be achieved through the following:~~

~~Verif. Method~~	~~Verif. By~~	~~Plan~~	~~Notes/Comments~~
~~A~~	~~ENG~~	~~Perform an analysis to determine the upper and lower design temperature limit for the vessels inclusive of any temperature limit to preclude cavitation of the sample/transfer pumps.~~	
~~A~~	~~ENG~~	~~Perform an analysis to document that the combined HFP/PCW design is capable of maintaining the required temperature range.~~	
~~R~~	~~ENG~~	~~Review of HFP vessel design, including interface with PCW system, to verify conformance to the results of the analysis.~~	

3.5.1.1.3 ~~Pressure~~Deleted

~~**Requirement:** The HFP vessels shall be designed to at least the maximum negative pressure generated by the HLW melter offgas treatment process system (HOP). (M.1.1).~~

~~**Basis Discussion:** The HFP vessels are designed to withstand the maximum negative pressure vacuum created by the HLW HOP booster and stack fans. The HFP vessels are designed to withstand the maximum positive pressure before the overflow feature opens. Note: Section 7.6 of calculation 24590-HLW-MVC-HFP-00001determined the design operating pressure range to be between 1.6 in. water gauge and -151 in. water gauge. [ALARA]~~

~~**Verification:** Verification is expected to be achieved through the following:~~

~~Verif. Method~~	~~Verif. By~~	~~Plan~~	~~Notes/Comments~~
~~A~~	~~ENG~~	~~Perform an analysis to determine the maximum negative pressure and verify the design can withstand at least that pressure.~~	~~Refer to ASME BPVC Section VIII, Division 1 calculation, documented in DVR.~~
~~R~~	~~ENG~~	~~Review of design to verify conformance to the results of the analysis.~~	~~Documented in DVR.~~

3.5.1.1.4 Capacity of Melter Feed Preparation Vessels

3.5.1.1.4.1 Capacity of Melter Feed Preparation Vessels [A]

Requirement: [HOLD] The HFP system melter feed preparation vessels (HFP-VSL-00001/00005) shall be designed for a minimum design batch volume of 5500 gallons; the vessel maximum capacity shall conform to the stated maximum capacities in the Dangerous Waste Permit (DWP). [Section 6.3.3, BOD] [Section III.10.E.1, Table III.10.E.C, DWP] (A.1)

Basis Discussion: The maximum capacity of HFP system vessels is restricted by the dangerous waste portion of the Resource Conservation and Recovery Act (RCRA) Permit. This requirement is on [HOLD] pending resolution of 24590-WTP-GCA-MGT-18-01147.

Verification: Verification is expected to be achieved through the following:

Verif. Method	Verif. By	Plan	Notes/Comments
A	ENG	Perform an analysis to verify an adequate vessel sizing.	
R	ENG	Review the design to verify conformance with the results of the analysis.	

3.5.1.1.4.2 Capacity of Melter Feed Preparation Vessels [B]

Requirement: The HFP system melter feed preparation vessels (HFP-VSL-00001/00005) shall be designed for a minimum design batch volume of 5100 gallons; the vessel maximum capacity shall conform to the stated maximum capacities in the Dangerous Waste Permit (DWP). [Section 6.3.3, BOD] [Section III.10.E.1, Table III.10.E.C, DWP] (A.1)

Basis Discussion: The minimum design batch volume of the melter feed preparation vessels was changed from 5500 gallons to 5100 gallons in Revision 6 of the Basis of Design but the change did not transfer over to Revision 7 of the document as it now shows 5500 gallons. This parameter will be changed back to 5100 gallons in the next revision to the document tracked through 24590-WTP-GCA-MGT-18-01147.

Verification: Verification is expected to be achieved through the following:

Verif. Method	Verif. By	Plan	Notes/Comments
A	ENG	Perform an analysis to verify an adequate vessel sizing.	
R	ENG	Review the design to verify conformance with the results of the analysis.	

3.5.1.1.5 Capacity of Melter Feed Vessels

3.5.1.1.5.1 Capacity of Melter Feed Vessels [A]

Requirement: [HOLD] The HFP system melter feed vessels (HFP-VSL-00002/00006) shall be designed for a minimum design batch volume of 5500 gallons; the vessel maximum capacity shall conform to the stated maximum capacities in the Dangerous Waste Permit (DWP). [Section 6.3.3, BOD] [Section III.10.E.1, Table III.10.E.C, DWP] (A.8)

Basis Discussion: The maximum capacity of HFP system vessels is restricted by the dangerous waste portion of the Resource Conservation and Recovery Act (RCRA) Permit. This requirement is on [HOLD] pending resolution of 24590-WTP-GCA-MGT-18-01147.

Verification: Verification is expected to be achieved through the following:

Verif. Method	Verif. By	Plan	Notes/Comments
A	ENG	Perform an analysis to verify an adequate vessel sizing.	
R	ENG	Review the design to verify conformance with the results of the analysis.	

3.5.1.1.5.2 Capacity of Melter Feed Vessels [B]

Requirement: The HFP system melter feed vessels (HFP-VSL-00002/00006) shall be designed for a minimum design batch volume of 5100 gallons; the vessel maximum capacity shall conform to the stated maximum capacities in the Dangerous Waste Permit (DWP). [Section 6.3.3, BOD] [Section III.10.E.1, Table III.10.E.C, DWP] (A.8)

Basis Discussion: The minimum design batch volume of the melter feed vessels was changed from 5500 gallons to 5100 gallons in Revision 6 of the Basis of Design but the change did not transfer over to Revision 7 of the document as it now shows 5500 gallons. This parameter will be changed back to 5100 gallons in the next revision to the document tracked through 24590-WTP-GCA-MGT-18-01147.

Verification: Verification is expected to be achieved through the following:

Verif. Method	Verif. By	Plan	Notes/Comments
A	ENG	Perform an analysis to verify an adequate vessel sizing.	
R	ENG	Review the design to verify conformance with the results of the analysis.	

3.5.1.2 Vessel Overflow

Requirement: The HFP system vessels shall have an instantaneously and continuously available overflow feature sized to handle the maximum in-flow rate to the vessel without the liquid level in the vessel reaching an unacceptably high level. [Section 6.7.5, BOD] (C.1)

Basis Discussion: The overflow features for HFP system vessels prevent liquid from entering the vessel ventilation system in the event that normal process operating controls and trips fail to stop vessel overfilling. [ALARA]

Verification: Verification is expected to be achieved through the following:

Verif. Method	Verif. By	Plan	Notes/Comments
A	ENG	Perform an analysis to verify the required overflow line size to handle the maximum in-flow rate to the vessel without the liquid level in the vessel reaching an unacceptably high level.	
R	ENG	Review the HFP system vessel design for the incorporation of an instantaneously and continuously available overflow feature that is sized in accordance with the results of the analysis.	

3.5.1.3 Vessel Overflow Design

Requirement: The HFP system vessel overflow lines shall contain no valves or other restrictions and are designed to prevent the buildup of material that could cause blockages. [Section 6.7.5, BOD] (C.1)

Basis Discussion: No design features are included that would preclude the overflow line from preventing liquid from entering the vessel ventilation system.

Verification: Verification is expected to be achieved through the following:

Verif. Method	Verif. By	Plan	Notes/Comments
R	ENG	Review the design of HFP system vessel overflow lines to verify that no valves or other restrictions are included and that the lines are designed to prevent the buildup of material that could cause blockages.	

3.5.1.4 Vessel Overflow to Cells

Requirement: Where HFP system vessels overflow to cells, the overflow system shall maintain segregation of the cell and the vessel ventilation system. [Section 6.7.5, BOD] (C.1)

Basis Discussion: Overflow systems must meet the requirements of WAC 173-303. In meeting these requirements, overflowing directly to the cell floor is only considered as the last overflow in a cascaded system.

Verification: Verification is expected to be achieved through the following:

Verif. Method	Verif. By	Plan	Notes/Comments
R	ENG	Review the design of HFP system vessel overflow lines which overflow to cells to verify that the cell and the vessel ventilation system are segregated.	

3.5.1.5 Return of Overflows to the Process

Requirement: HFP system vessel overflows shall be returned to the waste treatment process. [Section 6.7.5, BOD] (D.2)

Basis Discussion: None.

Verification: Verification is expected to be achieved through the following:

Verif. Method	Verif. By	Plan	Notes/Comments
R	ENG	Review the design of the HFP system to verify that vessel overflows are returned to the waste treatment process.	

3.5.1.6 Vessel Cooling and Heating

Requirement: HFP system vessels shall include cooling and/or heating capabilities, if required. If both heating and cooling are required, a duplicate coil shall be provided, as appropriate. [Sections 6.1, 11.7.4, BOD] (C.4)

Basis Discussion: Cooling and/or heating are required based on the particular waste properties contained in a particular vessel and to achieve the required processing conditions.

Verification: Verification is expected to be achieved through the following:

Verif. Method	Verif. By	Plan	Notes/Comments
A	ENG	Perform an analysis to verify the cooling and/or heating required for HFP system vessels based on the particular waste properties or required process conditions.	
R	ENG	Review the design of the HFP vessels to verify that cooling and/or heating is provided in conformance with the results of the analysis.	

3.5.2 Nuclear Safety, ALARA, Environmental, and Other Regulatory Requirements

3.5.2.1 ~~Vessel Overflow Feature Design~~Deleted

~~3.5.2.1.1 Unobstructed Flow Path~~

~~**Requirement:** Each HFP vessel shall include an overflow feature designed to provide an unobstructed escape flow path for liquids or gases during abnormal operating conditions (e.g., loss of negative pressure or vessel contents in excess of operational level limits). Overflowed liquid shall be directed towards the melter cave sump. [Sections 3.3.5.1.11, 3.3.5.2.3, 4.3.7.3, 4.4.16.3, 5.6.2, PDSA - HLW Facility][Section 6.7.5, BOD](C.1).~~

~~**Basis Discussion:** The HFP vessel overflow feature prevents excessive airflow into the vessel through the engineered vessel overflow during normal operations, without preventing the vessel overflow from providing~~

~~required safety functions (Section 3.1.3, 24590-HLW-3PS-HFP-T0003, *Engineering Specification for High Level Waste Melter Feed System Demisters, Air Ejectors and Overflow Flapper Valves*). The overflow feature is designed to maintain the headspace volume in HFP vessels. The headspace volume in the HFP vessels is maintained by designing the overflow feature to account for abnormal operating conditions, such as from operator error or equipment malfunction, that result in positive pressure or vessel content levels in excess to normal operations. The overflow feature provides a pathway for the vessel liquids and headspace atmospheres to exit the HFP vessels. Contained within the overflow is an opening mechanism which opens upon differential pressure across the disc to create the unobstructed path. This line is designed to prevent the buildup of material that could cause blockages. The overflow feature directs liquid that overflows from the HFP vessels to the respective melter cave sump and provides a backup exhaust path should the HOP and process vessel vent exhaust system (PVV) fail.~~

~~[ALARA]~~

~~**Verification:** Verification is expected to be achieved through the following:~~

~~**Verif. Method**~~	~~**Verif. By**~~	~~**Plan**~~	~~**Notes/Comments**~~
~~**R**~~	~~**ENG**~~	~~Review of HFP vessel design to verify incorporation of an overflow feature which directs overflows towards a melter cave sump.~~	~~Documented in DVR.~~

~~**3.5.2.1.2 Operability**~~

~~**Requirement:** The HFP vessel overflow feature shall be designed to prevent its opening mechanism from fully sealing closed. [Sections 4.3.7.3, 5.6.2, PDSA - HLW Facility](C.1).~~

~~**Basis Discussion:** The overflow feature is to be designed to not fully close during normal operations to prevent accumulation of solids around the overflow feature opening mechanism's sealing surfaces that could cause it to adhere closed to the vessel. This could result in the overflow feature failing to open under abnormal operations. [ALARA]~~

~~**Verification:** Verification is expected to be achieved through the following:~~

~~**Verif. Method**~~	~~**Verif. By**~~	~~**Plan**~~	~~**Notes/Comments**~~
~~**R**~~	~~**ENG**~~	~~Review of HFP vessel design to verify the opening mechanism of the overflow feature will not fully close.~~	~~Documented in DVR.~~

~~**3.5.2.1.3 Size**~~

~~**Requirement:** The HFP vessel overflow feature design shall be sized to at least meet the maximum in-flow rate at a bounding design rheology, while maintaining a minimum vapor headspace to allow for hydrogen dilution and prevent liquid flooding into the vessel ventilation header. [Sections 3.3.5.1.11, 4.3.7.3, 4.4.16.3, 5.6.2, PDSA - HLW Facility][Section 6.7.5, BOD](C.1).~~

~~**Basis Discussion:** The overflow feature reduces the potential for a hydrogen explosion by ensuring an adequate headspace volume to dilute hydrogen generated in the HFP vessels.~~

~~**Verification:** Verification is expected to be achieved through the following:~~

~~Verif. Method~~	~~Verif. By~~	~~Plan~~	~~Notes/Comments~~
~~A~~	~~ENG~~	~~Perform an analysis to verify the overflow feature is sized to discharge the maximum inflow rate at the bounding design rheology to maintain the minimum vapor headspace to allow hydrogen dilution and prevent liquid flooding into the vessel ventilation header.~~	~~Documented in DVR.~~
~~R~~	~~ENG~~	~~Review of design to verify conformance to the analysis results.~~	~~Documented in DVR.~~

3.5.2.2 ~~Waste Acceptance Impacting Qualification for MFPVs~~Deleted

~~**Requirement:** The MFPVs shall have an internal geometric configuration and baffle design in accordance with the waste acceptance impacting (WAI) requirements. [Section 3.1, 4.1.2.2, IHLW Waste Form Compliance Plan for the Hanford Tank Waste Treatment and Immobilization Plant] (A.2).~~

~~**Basis Discussion:** The internal geometric configuration is designed to increase the effectiveness of the agitator mixing and provide homogenization of the waste. The HLW melter feed prep vessel's internal geometric configuration and baffle design is deemed WAI (24590-HLW-WSF-ENG-07-005, *WAI Screening of HFP Sample Loop Flow Meter*).~~

~~[ALARA]~~

~~**Verification:** Verification is expected to be achieved through the following:~~

~~Verif. Method~~	~~Verif. By~~	~~Plan~~	~~Notes/Comments~~
~~R~~	~~ENG~~	~~Review of design to verify conformance to the WAI dimensional requirements.~~	~~Documented in completed 24590-HLW-WIQP-MS-09-0001, *HLW HFP Feed Preparation Vessels*~~

3.5.2.3 ~~Hydrogen Explosion~~Deleted

~~**Requirement:** The HFP vessels shall maintain integrity following a pressure front generated by an internal hydrogen explosion. [Sections 4.3.7.1, 4.3.7.1.1, 4.3.7.1.3, PDSA - HLW Facility].~~

~~**Basis Discussion:** The functional requirement in Section 4.3.7.1 of the PDSA - HLW Facility states, "Vessels maintain integrity following pressure front generated by a hydrogen explosion." This requirement has been established due to the potential for hydrogen generation within the waste contents. In addition to this requirement, the HFP vessels are designed with safety controls and design features to prevent accumulation of hydrogen in excess of the lower flammability limit (LFL) thereby preventing a hydrogen explosion from occurring (reference 3.5.3.7.1). They are also designed in accordance with ASME BPVC Section VIII, Division 1.~~

~~**Verification:** Verification is expected to be achieved through the following:~~

~~Verif. Method~~	~~Verif. By~~	~~Plan~~	~~Notes/Comments~~
~~A~~	~~ENG~~	~~Perform an analysis to document the HFP vessels maintain integrity after a hydrogen explosion.~~	~~Documented in DVR.~~
~~R~~	~~ENG~~	~~Review of design for conformance to the analysis results.~~	~~Documented in DVR.~~

3.5.2.4 HFP System Vessel Operating Conditions

Requirement: The HFP system vessels shall maintain passive confinement of the maximum operational volume of waste material and shall be designed as ASME Section VIII pressure vessels with a design temperature of 212 °F, a design pressure of 15 psig/Full Vacuum for the vessel and 65 psig/Full Vacuum for the cooling jacket, and a 40-year design life given the erosive, corrosive and radioactive constituents contained by the vessels. [Sections 4.4.2.3.3, 4.4.2.3.4, Appendix M, HLW PDSA]

Basis Discussion: The HFP system vessels are designed to national consensus codes and standards identified in the SRD that provide the basic design principles and formulas for the design of fired or unfired pressure vessels (including ASME Boiler and Pressure Vessel Codes, Section VIII, Division 1). [ALARA]

Verification: Verification is expected to be achieved through the following:

Verif. Method	Verif. By	Plan	Notes/Comments
A	ENG	Perform an analysis to verify that HFP system vessels maintain passive confinement of the maximum operational volume of waste material and are designed as ASME Section VIII pressure vessels with a design temperature of 212 °F, a design pressure of 15 psig/Full Vacuum for the vessel and 65 psig/Full Vacuum for the cooling jacket, and a 40-year design life given the erosive, corrosive and radioactive constituents contained by the vessels.	
R	ENG	Review the design to verify that the HFP system vessels are designed to ASME Section VIII with a design temperature of 212 °F, a design pressure of 15 psig/Full Vacuum for the vessel and 65 psig/Full Vacuum for the cooling jacket, and a 40-year design life given the erosive, corrosive and radioactive constituents contained by the vessels.	

3.5.2.5 HFP System Vessel Material

Requirement: The materials used in the construction of the HFP system vessels shall be non-fragmenting (including Austenitic stainless steel or other alloy with sufficient fracture toughness). [Sections 4.4.2.3.3, 4.4.2.3.4, Appendix M, HLW PDSA]

Basis Discussion: The use of materials with a high fracture toughness provides assurance that fragmentation will not occur because of a hydrogen event.

Verification: Verification is expected to be achieved through the following:

Verif. Method	Verif. By	Plan	Notes/Comments
A	ENG	Perform an analysis to verify the non-fragmenting materials (including austenitic stainless steel or other alloy with sufficient fracture toughness) to be used in the construction of the HFP system vessels.	
R	ENG	Review the design to verify that the materials used in the construction of the HFP system vessels are consistent with the results of the analysis.	

3.5.2.6 HFP System Vessel Ventilation

Requirement: The HFP system vessels shall provide a flow path sufficient to vent generated hydrogen and purge air from the vessel headspace. The design capacity of the relief path for the HFP system vessels shall meet or exceed the combined flow from the maximum design headspace air purge flow and the maximum gas flow evolved from the contained process solution. [Sections 4.4.2.3.3, 4.4.2.3.4, Appendix M, HLW PDSA] [Section 6.1, BOD] (C.3)

Basis Discussion: The HFP system vessels must be able to exhaust headspace gases to the melter cave during loss of vessel ventilation events.

Verification: Verification is expected to be achieved through the following:

Verif. Method	Verif. By	Plan	Notes/Comments
A	ENG	Perform an analysis to verify the HFP system vessel relief path capacity that meets or exceeds the combined flow from the maximum design headspace air purge flow and the maximum gas flow evolved from the contained process solution.	
R	ENG	Review the design to verify that the HFP system vessels include a flow path to vent generated hydrogen and purge air from the vessel headspace that has a capacity consistent with the results of the analysis.	

3.5.2.7 HFP System Vessel Overflow Relief Valve

Requirement: The HFP system vessel overflow segment relief valves (flapper valves) shall be designed to open at a setpoint pressure slightly greater than the C5 cell pressure to provide a vent path for the headspace gases when normal vessel ventilation is not operational. [Sections 4.4.2.3.3, 4.4.2.3.4, Appendix M, HLW PDSA] [Section 6.7.5, BOD] (C.3)

Basis Discussion: The flapper valve at the end of the overflow segment must be open, or able to open, when the process vessel vent exhaust (PVV)/HLW melter offgas treatment process (HOP) systems are not operational.

Verification: Verification is expected to be achieved through the following:

Verif. Method	Verif. By	Plan	Notes/Comments
A	ENG	Perform an analysis to verify the setpoint pressure that is slightly greater than the C5 cell pressure which provides a vent path for the headspace gases when normal vessel ventilation is not operational.	
R	ENG	Review the design to verify that the HFP system vessel overflow segment relief valves (flapper valves) open at the setpoint determined in the analysis.	

3.5.2.8 HFP System Vessel Purge

Requirement: The HFP system vessel purge shall provide air through the vessel to dilute the headspace below the hydrogen lower flammability limit (LFL). The HFP system vessel purge shall deliver dilution air at a flow rate

equal to or exceeding 2 scfm, including during and after NPH events [seismic (SC-I) and ashfall]. [Sections 4.4.2.5.3, 4.4.2.5.4, Appendix M, HLW PDSA] (C.2)

Basis Discussion: The flammable range is the concentration range of a gas or vapor that will burn (or explode) if an ignition source is introduced. The concentration of hydrogen in the HFP system vessels is kept below the lower limit of this range (known as the lower flammability limit) so that the gas/vapor generated in the vessel headspace is too lean to burn. The air purge is sized to comply with NFPA 69, Standard on Explosion Prevention Systems, which states that "the combustible concentration shall be maintained at or below 25% of the LFL". Supplying 2 scfm is roughly 200 times the hydrogen generation rate (HGR) representative of the full vessel of the most emittive waste (i.e., 2 L/hr at the maximum temperature per 24590-WTP-M4C-V11T-00011). A dilution rate of 200 times the HGR equates to approximately 0.5 volume % of hydrogen (where 1 volume % is a hydrogen concentration of approximately 25% LFL). Therefore, supplying this volume of purge air is sufficient to maintain the hydrogen concentration in the headspace volume below 25% of the LFL during normal operations. The 2 scfm value is based on preliminary information and is subject to change based on the result from calculation 24590-HLW-Z0C-H01T-00001, *Unmitigated Consequences from HLW Hydrogen Explosions*.

Verification: Verification is expected to be achieved through the following:

Verif. Method	Verif. By	Plan	Notes/Comments
A	ENG	Perform an analysis to verify that the vessel purge provides air through the vessel to dilute the headspace below the LFL by delivering dilution air at a flow rate equal or exceeding 2 scfm.	
R	ENG	Review the design to verify that purge air is provided consistent with the results of the analysis.	

3.5.2.9 Vessel Spill Prevention

Requirement: The HCP/HFP system vessels regulated as tank systems shall be designed with spill prevention controls (WAC 173-303-640[5][b][i]). [Section 14.10.1.1, BOD]

Basis Discussion: Tank systems in the HLW Facility are subject to the requirements of the Washington Administrative Code. [ALARA]

Verification: Verification is expected to be achieved through the following:

Verif. Method	Verif. By	Plan	Notes/Comments
R	ENG	Review the design of the HCP/HFP system vessels regulated as tank systems to verify the inclusion of overflow prevention controls.	

3.5.3 System Interface Requirements

3.5.3.1 ~~PT Facility HLP - Receive HLW Concentrate~~Deleted

~~**Requirement:** [**HOLD**] The MFPVs shall interface with the HCP transfer line to receive HLW concentrate from the PT Facility HLP at a minimum required transfer rate to support 100% capacity melter throughput for glass production of 3.75 metric tons of glass (MTG)/day/melter (total of 7.5 MTG per day). [Section 6.3.1, BOD] [Sections 4.4.7, 4.4.7.2, PDSA - HLW Facility] [Section C.7(b)(3), No. DE-AC27-01RV14136] (A.1).~~

~~**Basis Discussion:** The design throughput (processing) capabilities for the HLP, HCP and HFP systems are defined in Section 6.1.3 and 6.3.3 of the BOD. Software models are used to validate the design throughput capacity is met by the designed systems, inclusive of treatment processes, individual system and component capabilities, and equipment reliability and maintainability inputs. The HFP is designed to accommodate the receipt and treatment of specific waste volumes, using batch processing capabilities, to meet the design throughput requirements. The throughput rates are a function of the feed characteristics in a given batch volume. Batch volume and nominal transfer rate are used as inputs in the overall throughput analysis to ensure HCP and HFP systems operations are designed to support the 100 % capacity melter throughput for glass production of 3.75 metric tons of glass (MTG)/day/melter (total of 7.5 MTG per day), as stipulated in the WTP Contract. As stated in the BOD, the PT facility transfer rate to the HLW HCP piping is considered a key design feature assumed in modeling and ORP concurrence is required before the capability can be reduced in design.~~

~~The HCP transfer line provides the interface between the PT Facility and HLW Facility to support the glass throughput production. Minimum transfer rate and line velocity values to support glass production and to preclude line plugging will be provided in the PT Facility HLP SDD. The HCP and HFP systems need to support the HLP transfer rate. Section 6.3.1 of the BOD includes a nominal transfer rate of 55 gpm, but Section 7.1 of calculation 24590-PTF-MPC-HLP-00016, *Pump and Line Sizing Calculation for Pumps HLP-PMP-000019A/B* determined the minimum transfer rate to be 56 gpm. This requirement and design associated with receiving waste from PT (HCP piping) are on "[**HOLD**]" until the BOD is updated to reflect the bounding minimum required transfer rate.~~

~~[ALARA]~~

~~**Verification:** Verification is expected to be achieved through the following:~~

~~**Verif. Method**~~	~~**Verif. By**~~	~~**Plan**~~	~~**Notes/Comments**~~
~~**A**~~	~~**ENG**~~	~~Perform an analysis to determine the transfer rate of concentrate the HCP and HFP systems must receive from the PT facility to support HLW facility throughput.~~	
~~**R**~~	~~**ENG**~~	~~Review design to verify the HCP transfer line provides a connection between the PT Facility HLP and the HLW Facility MFPVs.~~	
~~**R**~~	~~**ENG**~~	~~Review the PCJ design to verify the existence of a control scheme that allows HLW concentrate transfer from the PT Facility HLP to the MFPV.~~	

3.5.3.2 ~~Glass Former Reagent System -~~ Receive Glass Formers

Requirement: The HFP system shall interface with the GFR system to receive gravity flow of glass formers into the MFPV. [Section 6.1.3, BOD] [Sections 2.2, 3.2, 4.1, IHLW ~~Waste Form Compliance Plan for WTP~~] (A.4)~~.~~

Basis Discussion: Proper proportions of various glass formers will be prepared, mixed, moistened, added to the HLW concentrate, and mixed to prepare HLW feed material.

Verification: Verification is expected to be achieved through the following:

Verif. Method	**Verif. By**	**Plan**	**Notes/Comments**
R	**ENG**	Review ~~of~~ the design to verify that the MFPV interfaces with the GFR system to receive the glass formers.	

Verif. Method	Verif. By	Plan	Notes/Comments
~~R~~	~~ENG~~	~~Review the PCJ design to verify the existence of a control scheme that allows transfer of glass formers from the GFR blend vessel.~~	

3.5.3.3 ~~Melter Feed Preparation Vessel - Transfer to Melter Feed Vessel~~Deleted

~~**Requirement:** The MFPVs shall interface with the MFVs to transfer the mixed and compliant melter feed batch for staging prior to glass production. [Sections 2.2, 3.1, 3.2, IHLW Waste Form Compliance Plan for WTP](A.7, A.8).~~

~~**Basis Discussion:** The MFPVs transfer sampled and approved waste to the MFVs for continuous transfer to the melters.~~

~~**Verification:** Verification is expected to be achieved through the following:~~

~~Verif. Method~~	~~Verif. By~~	~~Plan~~	~~Notes/Comments~~
~~R~~	~~ENG~~	~~Review of design to verify the transfer line interfaces between the MFPV and MFV to receive the melter feed.~~	

3.5.3.4 ~~Melter Feed Vessel - Transfer to Melter~~Deleted

~~**Requirement:** The MFVs shall interface with the HLW melters to transfer the mixed melter feed batch for glass production. [Sections 2.2, 3.1, 3.2, IHLW Waste Form Compliance Plan for WTP](A.10).~~

~~**Basis Discussion:** Waste within the MFVs is transferred by the ADS pumps to the melters.~~

~~**Verification:** Verification is expected to be achieved through the following:~~

~~Verif. Method~~	~~Verif. By~~	~~Plan~~	~~Notes/Comments~~
~~R~~	~~ENG~~	~~Review of design to verify the transfer line interfaces between the MFVs and melters to receive the melter feed.~~	

3.5.3.5 ~~Plant Wash and Disposal System - Vessel Wash Water~~Deleted

~~**Requirement:** The HFP vessels shall interface with the PWD to receive demineralized water, with or without nitric acid, to wash and decontaminate the vessels and internals. [Sections 5.2, 14.1, 20.0, ORD](D.1, D.2).~~

~~**Basis Discussion:** Internal decontamination by-products are processed forward to the melters using the feed-forward strategy. [ALARA]~~

~~**Verification:** Verification is expected to be achieved through the following:~~

~~Verif. Method~~	~~Verif. By~~	~~Plan~~	~~Notes/Comments~~
~~R~~	~~ENG~~	~~Review of the design to verify the interface between the PWD and NAR systems and HFP vessels to receive demineralized water and nitric acid for washing the vessels.~~	

3.5.3.6 ~~Vessel Cooling~~Moved to 3.5.1.6

~~**Requirement:** The HFP vessel design shall be capable of being cooled and include any required system interfaces. (K.1, M.1.1).~~

~~**Basis Discussion:** The HFP vessels are cooled to remove heat generated by mixing and radioactive decay to maintain temperatures within the ranges stipulated in requirement 3.5.1.1.2.~~

~~**Verification:** Verification is expected to be achieved through the following:~~

~~Verif. Method~~	~~Verif. By~~	~~Plan~~	~~Notes/Comments~~
~~A~~	~~ENG~~	~~Perform an analysis to document the HFP vessels are capable of being cooled and maintain temperature within the ranges stipulated in requirement 3.5.1.1.2.~~	
~~A~~	~~ENG~~	~~Perform an analysis to determine the water demand required to satisfy HFP vessel cooling and determine if the interfacing cooling system can supply the required demand.~~	
~~R~~	~~ENG~~	~~Review of design to verify conformance to the analysis results.~~	

3.5.3.7 ~~Process Vessel Vent Exhaust and HLW Melter Offgas Treatment Process Systems - Vessel Ventilation~~Deleted

~~3.5.3.7.1 Hydrogen Mitigation~~

~~**Requirement:** The HFP vessels shall interface with the PVV systems to remove hydrogen from the vessel headspace during normal operations. [Sections 4.3.8.3.1, 4.3.8.3.2, PDSA - HLW Facility] [Section III.10.E.9.c.xi., Dangerous Waste Portion of RCRA Permit] (J.1).~~

~~**Basis Discussion:** The PVV and HOP systems reduce the potential for explosion by removing hydrogen from the vessel headspace to below the LFL. DWP condition III.10.E.5.1 requires the H_2 to be maintained below the LEL which normally is slightly less stringent than the LFL.~~

~~[ALARA]~~

~~**Verification:** Verification is expected to be achieved through the following:~~

~~Verif. Method~~	~~Verif. By~~	~~Plan~~	~~Notes/Comments~~
~~A~~	~~ENG~~	~~Perform an analysis to document the PVV system capability to remove hydrogen from the vessel headspace during normal operations.~~	
~~R~~	~~ENG~~	~~Review of the system design to verify the interface with the PVV system to remove hydrogen from the HFP vessel headspace.~~	~~Documented in DVR.~~

3.5.3.8 ~~High Pressure Steam - Steam Ejectors~~Deleted

~~**Requirement:** The HFP vessel design shall interface with the high pressure steam system (HPS) system to receive steam for the steam ejectors to transfer the vessel washwater (up to 5% solids) to the RLD system. (H.1).~~

~~**Basis Discussion:** The steam ejectors provide a method to transfer vessel washings to support vessel decontamination and decommissioning (D&D). The steam ejectors are physically separated from the HFP vessels during normal operations to prevent transfer of non-Newtonian waste from entering the RLD system. Decision paper 24590-HLW-TB-ENG-13-0001, Engineering Design Decision for RLD, identifies the proposed operational restrictions to the transfer path between the HFP vessels and RLD except for vessel decommissioning. PDSA Appendix 4B, Hydrogen Mitigation for hydrogen in Piping and Ancillary Vessels, states: "steam ejectors in the HLW HFP vessels are not used on a routine basis and are not installed until needed" and "ejectors will be employed for final cleanup of vessels prior to replacement." The reduction in maintenance resulting from use of ejectors versus pumps is an ALARA feature. [ALARA]~~

~~**Verification:** Verification is expected to be achieved through the following:~~

~~Verif. Method~~	~~Verif. By~~	~~Plan~~	~~Notes/Comments~~
~~A~~	~~ENG~~	~~Perform an analysis to verify capability of the steam ejectors to transfer washwater.~~	
~~R~~	~~ENG~~	~~Review of design to verify incorporation of the analysis~~	
~~T~~	~~SU/COM~~	~~Demonstrate the steam ejectors can transfer washwater from the HFP vessels to the RLD (RLD-VSL-00008).~~	

3.5.3.9 Autosampling System Interface~~ Recirculate HFP vessel contents for sampling~~

Requirement: Each HFP vessel design shall include a recirculation loop to the ASX system for sampling. [Sections 3.1, 4.1, 6.4, IHLW] (A.3, A.6)~~.~~

Basis Discussion: The HFP recirculation loop includes an ASX autosampler providing the capability to extract samples for analysis from the HFP vessels.~~ Samples are collected before and after the addition of glass formers in the MFPV. A glass formulation algorithm will be used to calculate the required glass forming chemicals to be added to the MFPV. There will not be routine sampling of the MFV but sampling capability will be provided. The melter feed is transferred from the MFV to the melter where it is processed into glass and subsequently poured into canisters. Requirement 3.4.1.1.3, Minimum Sampling Transfer Rate, includes a verification test to verify the sample/transfer pumps are capable of providing a minimum transfer rate to the ASX.~~

Verification: Verification is expected to be achieved through the following:

Verif. Method	Verif. By	Plan	Notes/Comments
R	ENG	Review the design to verify the sample lines provide the capability to recirculate sample fluid between the ASX and each HFP vessel.	

3.5.3.10 ~~High-Level Waste Melter Feed Process System Vessels Receive Autosampling System Enclosure Drain Lines~~Deleted

~~**Requirement:** [**HOLD**] The HFP vessel design shall interface with the ASX drain lines from the ASX enclosures to receive overflowed liquid. (A.3.1, A.6.1).~~

~~**Basis Discussion:** Autosamplers ASX-SMPLR-00029/0042 drain overflowed liquid back to the HFP vessels. This requirement and the ASX autosampler drain line interface with the HFP system are on "[**HOLD**]" because the hazards analysis and PDSA have not yet been updated with section 4 requirements to reflect the information in the SDS. Section 3.3.3.6.1 of the PDSA - HLW Facility currently states that the ASX drain lines are routed to vessel RLD-VSL-00008 however, the PDSA requires section 4 requirements for the ASX drain lines to drain to the MFPVs. The requirement reference will be updated to include the PDSA section reference after the PDSA is updated to align with the SDS.~~
~~[ALARA]~~

~~**Verification:** Verification is expected to be achieved through the following:~~

~~Verif. Method~~	~~Verif. By~~	~~Plan~~	~~Notes/Comments~~
~~R~~	~~ENG~~	~~Review the vessel design to verify the ASX enclosure drain lines are connected to the HFP vessels.~~	

3.5.3.11 ~~Plant Wash and Disposal System - Dilute vessel contents~~Deleted

~~**Requirement:** The HFP vessels shall interface with the PWD to receive demineralized water for washing the vessel internals and diluting the vessel contents. (D.1.3, H.1).~~

~~**Basis Discussion:** The HFP vessel contents are diluted with demineralized water and cleaned prior to removal using the steam ejectors for D&D or maintenance and replacement activities. Diluting the waste also enables the steam ejectors to work more efficiently. Per Section 3 of calculation 24590-HLW-M6C-HFP-00002, *HFP-EJCTR-00001, -00002, -00004 and -00005 Steam Ejector Sizing Calculation* the steam ejectors are only capable of lifting a bounding/maximum solids percentage of 5% by weight. Decision paper 24590-HLW-TB-ENG-13-0001 requires operational restrictions to the transfer path between the HFP vessels and RLD except for vessel decommissioning.~~

~~[ALARA]~~

~~**Verification:** Verification is expected to be achieved through the following:~~

~~Verif. Method~~	~~Verif. By~~	~~Plan~~	~~Notes/Comments~~
~~R~~	~~ENG~~	~~Review of design to verify interface with the PWD to receive DIW for washing HFP vessel internals.~~	~~Documented in DVR.~~

3.5.3.12 ~~Instrument Service Air Purge to GFR Supply Line~~Deleted

~~**Requirement:** The MFPVs shall interface with the safety instrument service air system (ISA) to receive a continuous air purge of the GFR supply line. [Sections 3.3.5.2.3, 4.3.23, 4.4.23, PDSA - HLW Facility](I.4).~~

~~**Basis Discussion:** The GFR supply line is continually purged with a low airflow from the safety ISA to prevent backflow of contamination from the MFPVs to the GFR during normal operation.~~

~~[ALARA]~~

~~**Verification:** Verification is expected to be achieved through the following:~~

~~Verif. Method~~	~~Verif. By~~	~~Plan~~	~~Notes/Comments~~
~~R~~	~~ENG~~	~~Review of design to verify interface with the MFPV to receive Safety ISA purge to the GFR supply line.~~	~~Documented in DVR.~~

3.5.4 Other Technical, Specialty, Operations and Maintenance Requirements

3.5.4.1 Vessel Washing

Requirement: The HFP system vessels shall include the capability to add decontamination chemicals for clean-out and shall generally be equipped with interior perimeter spray rings, or an equivalent design feature~~be designed with internal spray mechanisms to perform vessel washing and removal of contamination~~. [Sections 11.7.4, 16.4.8, BOD] [Sections 14.1, 14.2, 20.0, ORD] (B.1)~~(D.2, H.1).~~

Basis Discussion: The internal spray mechanisms used to wash the HFP vessels help to facilitate the removal of contamination and prevent the buildup of solids on the vessel walls.~~ The vessel washings are processed forward to the melters during normal operations. The HFP vessels are to be cleaned prior to removal for D&D or maintenance/replacement activities. The steam ejectors are only used to transfer vessel washwater to the RLD prior to vessel decommissioning.~~

[ALARA]

Verification: Verification is expected to be achieved through the following:

Verif. Method	Verif. By	Plan	Notes/Comments
~~A~~	~~ENG~~	~~Perform an Analysis to verify the spray mechanisms are capable of washing the vessel walls and internals.~~	
R	ENG	Review the design to verify the HFP system vessels include the capability to add decontamination chemicals for clean-out and are equipped with an interior spray/rinse feature~~Review of design to verify incorporation of internal spray mechanisms are designed in accordance with 24590-WTP-GPG-M-013, *Plant Wash System Design*~~.	

3.5.4.2 Operator Reaction Time

Requirement: The HFP system shall have the capability to automatically transition from normal processing to a safe state or idle mode during a casualty event without relying on operator manual action for at least 30 minutes after the onset of a credible failure event. [Section 11.10, ORD]

Basis Discussion: In the event that excess liquid accumulates in a vessel from a credible failure event (e.g. pump doesn't turn off or is inoperable, plugged piping, etc.) provisions are provided to properly contain the liquid without operator manual action for at least 30 minutes. ~~The vessels are provided with high level limit switches which are interlocked with pumps and other equipment. If the high level is reached, equipment is operated to control the liquid level in the vessel. If these interlocks or equipment fail, overflow features are provided to route the liquid to sumps.~~
~~[ALARA]~~

Verification: Verification is expected to be achieved through the following:

Verif. Method	Verif. By	Plan	Notes/Comments
R	**ENG**	Review the HFP design to verify no manual operator action is required to contain contaminated liquid for 30 minutes after a credible failure event.	~~Document in an evaluation/assessment. Ops to participate in and/or review the evaluation/assessment.~~

3.5.4.3 ~~Pneumercator~~ Level Instrumentation Plugging Prevention

Requirement: Purge air liquid level instrumentation (pneumercator) in process vessels shall be designed to prevent plugging. There shall also be a mechanical (clean-out port) capability available for unplugging the pneumercator tubes if a plug occurs and flushing is unsuccessful. [Section 11.16, ORD]

Basis Discussion: The plugging of process vessel level instrumentation could impact the ability of the sensor to provide an accurate reading of the process conditions.~~The purge air liquid level instrumentation in process vessels design to prevent plugging is the primary means to prevent plugging; the mechanical clean-out ports are an alternative means of plugging clean-out.~~

Verification: Verification is expected to be achieved through the following:

Verif. Method	Verif. By	Plan	Notes/Comments
~~**A**~~	~~**ENG**~~	~~Perform an analysis to determine the required pressure to prevent pneumercator plugging and identify the interfacing service air source.~~	
R	**ENG**	Review the design to verify that level instrumentation in HFP system vessels included methods to preclude plugging.~~Review the HFP design to verify attributes exist to prevent plugging; including mechanical clean-out ports.~~	~~Design features such as automatic bubbler flushes would satisfy this requirement.~~

3.5.4.4 Vessel Access

Requirement: The HFP system vessels shall provide a means of gaining personnel access to the vessel interior. If personnel access is not feasible, provisions shall be made to ensure that the vessel cleanliness is certified at construction and maintained by controls until turnover to commissioning. [Section 19.10, ORD]

Basis Discussion: Personnel access is required to facilitate vessel integrity inspections, cleaning, and draining.

Verification: Verification is expected to be achieved through the following:

Verif. Method	Verif. By	Plan	Notes/Comments
R	**ENG**	Review the vessel design to verify a means of gaining personnel access is provided.	

3.6 Piping and In-Line Component Requirements

3.6.1 Mission and Functional / Performance Requirements (Including States/Modes)

3.6.1.1 Piping Design

3.6.1.1.1 Fully Welded Piping

Requirement: All in-cell process piping that is nonmaintainable shall be fully welded. [Sections 11.7.4, 16.4.1.1, BOD]~~.~~

Basis Discussion: The in-cell piping in contact with the HLW concentrate provides containment of the process fluid. Traps for contamination should be mitigated by fully welded pipe connections.

[ALARA]

Verification: Verification is expected to be achieved through the following:

Verif. Method	Verif. By	Plan	Notes/Comments
R	**ENG**	Review the system design to verify ~~adoption~~ that all in-cell process piping that is nonmaintainable is ~~of~~ fully welded ~~nonmaintainable piping~~.	~~Documented in DVR (although not safety, hard-to-reach piping is included).~~

3.6.1.1.2 Siphon and Backflow Prevention

Requirement: The HCP/HFP system piping shall be designed to mitigate the effects of unplanned siphoning or backflow. [Section 7.1, ORD] ~~**[HOLD]** The piping design shall provide one barometric head of isolation on service piping lines below the maximum liquid level of the associated vessels/tanks and piping features. The piping design for spargers, sample/transfer pump priming lines, ADS pump lines, cooling jacket lines, steam ejectors, and bubblers shall meet this requirement. [Sections 3.3.5.2.8, 3.3.5.2.11, 3.3.5.6.4, 4.4.7, 4.4.23.3, 5.6.7, 5.6.14, 5.3.2.12, 5.6.34, PDSA - HLW Facility][Section 7.1, ORD].~~

Basis Discussion: ~~One barometric head of isolation on service piping lines prevents contamination spread up these utility or process lines (accomplished by 34 ft of vertical pipe or piping to a destination open to air, and the piping/destination is always above the liquid level in the vessel). This requirement and HFP vessel sparge tube design are on "[**HOLD**]" due to the differences between the SDS and the PDSA - HLW Facility and the resolution is expected to eliminate sparging. The PDSA references utilization of a sparge tube design to for hydrogen mitigation while the SDS offers multiple hydrogen mitigation options; not including air sparging. This hold only applies to sparging; other utilities described within the requirement are not on hold.~~
None. [ALARA]

Verification: Verification is expected to be achieved through the following:

Verif. Method	Verif. By	Plan	Notes/Comments
~~**A**~~	~~**ENG**~~	~~Perform an analysis to verify that one barometric head of isolation is provided below the maximum liquid level for the spargers, sample/transfer pump priming lines, ADS pump lines, cooling jacket lines, steam ejectors, and bubblers.~~	

Verif. Method	Verif. By	Plan	Notes/Comments
R	ENG	Review the deign to verify that the HCP/HFP system piping is designed to mitigate the effects of unplanned siphoning or backflow~~Review the design to verify the spargers, sample/transfer pump priming lines, ADS pump lines, cooling jacket lines, and bubblers meet this requirement~~.	~~Documented in DVR.~~

3.6.1.1.3 ~~Double Walled (Coaxial) Piping~~Moved to 3.6.1.3.1

~~**Requirement:** The HLW concentrate transfer piping from the PT Facility to the HLW Facility shall be an underground, double-walled (coaxial) pipeline. [Sections 4.4.4.2, 5.6.7, PDSA - HLW Facility][Section 5.6.20, PDSA - PT Facility][Section 14.10.1.3, BOD].~~

~~**Basis Discussion:** To provide a dual containment boundary for transferring the HLW concentrate between the PT Facility and HLW Facility. Radioactive liquid transfer lines are double-encased to minimize the potential for release of contamination due to the breach of a process line. Coaxial lines have the provision to pneumatically test both primary and secondary lines for leakage (Section 14.3, ORD). See Section 3.4.2 for allocation of leak detection requirements. The transfer lines are also buried to reduce worker radiation exposure due to high dose rates.~~

~~[ALARA]~~

~~**Verification:** Verification is expected to be achieved through the following:~~

~~Verif. Method~~	~~Verif. By~~	~~Plan~~	~~Notes/Comments~~
~~R~~	~~ENG~~	~~Review the design to verify the piping from the PT Facility to the HLW Facility is double-walled.~~	~~Documented in DVR.~~

3.6.1.1.4 Co~~A~~axial Pipe Leak ~~Testing~~Detection

Requirement: The HFP/HCP system ~~C~~coaxial lines shall have the provision ~~to pneumatically test both primary and secondary lines for leakage. Coaxial lines shall also have~~ for on-line primary containment leak detection ~~capability~~. [Section 14.3, ORD] [Section 11.3.5.2, BOD]

Basis Discussion: All secondary containments are provided with leak detection systems for the detection of primary containment leaks. [ALARA] ~~The Coaxial piping (pipe within a pipe) contains test ports for the inner and outer pipes such that leakage testing may be performed to verify containment integrity.~~

Verification: Verification is expected to be achieved through the following:

Verif. Method	Verif. By	Plan	Notes/Comments
R	ENG	Review the HCP/HFP system coaxial pipe design to verify that there are provisions for on-line primary containment leak detection.~~Review the design to verify the HFP/HCP Coaxial piping includes provisions to pneumatically test both the primary and secondary lines for leakage and includes on-line leak detection capability.~~	~~Documented in DVR.~~

3.6.1.1.5 ~~Coaxial Piping Support~~Moved to 3.6.1.3.8

~~**Requirement:** The underground HLW concentrate transfer piping from the PT Facility to the HLW Facility shall be designed such that it is supported and protected from physical damage resulting from backfill settlement, vibration, expansion or vehicular traffic. [Section 14.10.1, BOD]~~

~~**Basis Discussion:** Backfill materials supporting the transfer piping from PT to HLW should not allow stresses on the coaxial piping that could cause physical damage. Procedures described in American Petroleum Institute (API) Recommended Practice 1615, Installation of Underground Petroleum Storage Systems (API 1996a) or ANSI Standard B31.3, *Liquid Petroleum Transportation Piping Systems* (ANSI 1987) may be used as guidance.~~

~~**Verification:** Verification is expected to be achieved through the following:~~

~~Verif. Method~~	~~Verif. By~~	~~Plan~~	~~Notes/Comments~~
~~R~~	~~ENG~~	~~Review the design to verify the piping from the PT Facility to the HLW Facility is supported and protected from physical damage.~~	~~May be documented in an evaluation or assessment.~~

3.6.1.1.6 Cross-Contamination Prevention

Requirement: Where appropriate, utility system connections to the HCP/HFP system process shall have properly engineered devices such as air gaps or adequate backflow preventers to mitigate cross-contamination. [Section 7.1, ORD]

Basis Discussion: The interfaces between utility systems and process systems are controlled to prevent the backflow of contamination into the clean utility system. [ALARA]

Verification: Verification is expected to be achieved through the following:

Verif. Method	Verif. By	Plan	Notes/Comments
R	ENG	Review the deign to verify that utility system connections to the HCP/HFP system process have properly engineered devices to prevent or mitigate cross-contamination.	

3.6.1.1.7 Electrical Heat Tracing

Requirement: Electrical heat tracing shall be provided for HCP/HFP system process piping and instrument sensing lines, if required. [Section 16.5, ORD] [Section 8.7, BOD]

Basis Discussion: Electrical heat tracing is provided on process lines that must be maintained at a specific process fluid operating temperature.

Verification: Verification is expected to be achieved through the following:

Verif. Method	Verif. By	Plan	Notes/Comments
R	ENG	Review the design to verify that HCP/HFP system process piping and instrument sensing lines are provided with electrical heat tracing, if required.	

3.6.1.1.8 Steam Line Lagging

Requirement: HCP/HFP system steam line lagging shall not cover valves and other equipment such as to prevent its use and identification, and not introduce hazards when removing or replacing the lagging, (e.g., sharp edges). Lagging blankets shall be installed if access is required regularly. [Section 7.1, ORD]

Basis Discussion: The ability to access and identify valves and other equipment contained in steam distribution piping is incorporated into the design of lagging and supports the continual process system operation.

Verification: Verification is expected to be achieved through the following:

Verif. Method	Verif. By	Plan	Notes/Comments
R	ENG	Review the design of the HCP/HFP system to verify any lagging on steam lines does not cover valves and other equipment.	

3.6.1.1.9 Isolation and Test Points

Requirement: Isolation and test points with drain/bleed valves shall be included in the HCP/HFP system design. [Section 11.5.1, BOD] [Sections 9.1, 19.14, ORD]

Basis Discussion: Isolation and test points allow for testing of plant items during normal operations and removal or replacement, as applicable.

Verification: Verification is expected to be achieved through the following:

Verif. Method	Verif. By	Plan	Notes/Comments
R	ENG	Review the design to verify isolation and test points with drain/bleed valves are included in the HCP/HFP system.	

3.6.1.1.10 Process Pipe Flushing

Requirement: HCP/HFP system piping carrying contaminated liquid shall have provisions for flushing. Where appropriate, this shall also include seal loops. Connections shall be provided external to black cells to facilitate flushing of potentially corrosive deposits in piping. [Sections 14.3, 20, ORD] [Section 16.4.8, BOD] (B.1)

Basis Discussion: Periodic flushing may be required since partial plugging may develop over time, slowing down transfers.

Verification: Verification is expected to be achieved through the following:

Verif. Method	Verif. By	Plan	Notes/Comments
R	ENG	Review the design of the HCP/HFP system process piping to verify provisions are included for flushing.	

3.6.1.1.11 Piping Connections

Requirement: The HCP/HFP system process and service piping connections shall be designed to minimize the potential for liquid waste leakage or seepage when disconnected. [Section 11.4.1, BOD]

Basis Discussion: The design of HCP/HFP system piping is designed to minimize personnel exposure to radioactive process fluids. [ALARA]

Verification: Verification is expected to be achieved through the following:

Verif. Method	Verif. By	Plan	Notes/Comments
R	ENG	Review the design of the HCP/HFP system process and service piping connections to verify that they are designed to minimize the potential for liquid waste leakage or seepage when disconnected.	

3.6.1.2 Pressure Relief Valve~~s~~ Configuration

Requirement: Pressure relief valves shall be configured using a full port three-way valve, dual pressure safety valves (PSV), and drain valves on each leg (unless a redundant train is provided) to preclude a service outage when servicing any relief valve. The three-way valve shall be designed such that there is no position where the internal plug, disc, or ball would isolate or block both PSVs simultaneously. It shall also be capable of being locked (with use of either an integral or commercially available after marker locking device) in a position that only allows one port to be fully open and the other port fully closed. [Section 14.4, ORD]

Basis Discussion: This valve configuration is required on vessels and systems that cannot be easily isolated, or when system draining and isolation would have a negative impact on safety or productivity.~~Pressure relief valves are configured so that there is no service outage while servicing a PSV. Pressure relief valves are located on the HPS inlet to the heat exchangers, hot water outlet of the heat exchanger, hot/cold water return from the decontamination vessels, and at the hot water head vessels.~~

Verification: Verification is expected to be achieved through the following:

Verif. Method	Verif. By	Plan	Notes/Comments
R	ENG	Review the design to verify pressure relief valves are configured using a full port three-way, dual PSVs, and drain valves on each leg.~~Review the piping design to verify pressure relief valves are configured using full port three-way valves, dual PSVs, and a drain valve on each leg.~~	~~Document in DVR~~
R	ENG	Review the design to verify the three-way valve is designed such that there is no position where the internal plug, disc, or ball would isolate or block both PSVs simultaneously.	
R	ENG	Review the design to verify the three-way valve is capable of being locked (with use of either an integral or commercially available after marker locking device) in a position that only allows one port to be fully open and the other port fully closed	

3.6.1.3 Underground Piping Requirements

3.6.1.3.1 Process Piping Between Facilities

Requirement: The HCP system active process pipe work between the HLW and PT Facilities shall be direct buried coaxial pipe. This piping shall be sloped, as required. [Section 11.2.3, BOD]

Basis Discussion: Secondary containment is provided for dangerous waste transfer lines.

Verification: Verification is expected to be achieved through the following:

Verif. Method	Verif. By	Plan	Notes/Comments
R	ENG	Review the design of the HCP system to verify the active pipe work between the HLW and PT Facilities is direct buried coaxial pipe that is sloped, as required.	

3.6.1.3.2 Waste Transfer Piping Isolation

Requirement: The HCP/HFP system shall have the ability to isolate the transfer pipe between the HLW Facility and the PT Facility. [Section 11.4.7, BOD]

Basis Discussion: Isolating the facility transfer line provides the capability for phased commissioning between facilities.

Verification: Verification is expected to be achieved through the following:

Verif. Method	Verif. By	Plan	Notes/Comments
R	ENG	Review the design of the HCP/HFP system to verify the capability to isolate the transfer lines between the HLW and PT Facilities.	

3.6.1.3.3 Waste Transfer Line Depth

Requirement: All HCP system underground radiological waste transfer pipes shall be buried a minimum of 3 feet deep. [Section 10.1.5.7, BOD]

Basis Discussion: None.

Verification: Verification is expected to be achieved through the following:

Verif. Method	Verif. By	Plan	Notes/Comments
R	ENG	Review the underground piping design to verify all piping is buried a minimum of 3 ft deep.	

3.6.1.3.4 Waste Transfer Line Flushing

Requirement: The HCP/HFP system shall include a flushing capability for the transfer lines between the HLW Facility and the PT Facility. [Section 14.3, ORD] (B.1)

Basis Discussion: Flushing facilities are provided between the WTP facilities to provide for normal flushes of transfer lines and for unplugging efforts when necessary.

Verification: Verification is expected to be achieved through the following:

Verif. Method	Verif. By	Plan	Notes/Comments
R	ENG	Review the design of the HCP/HFP system to verify the inclusion of a flushing capability in the transfer lines between the HLW Facility and the PT Facility.	

3.6.1.3.5 Underground Coaxial Pipe Testing

Requirement: Co-axial lines used as underground transfer lines shall have provisions to pneumatically test both the primary and secondary lines for leakage. [Section 14.3, ORD]

Basis Discussion: Underground transfer lines are pressure tested to guarantee structural integrity before being placed into service and for periodic evaluation of piping integrity.

Verification: Verification is expected to be achieved through the following:

Verif. Method	Verif. By	Plan	Notes/Comments
R	ENG	Review the underground piping design to verify provisions to pneumatically test both the primary and secondary lines for leakage are included.	

3.6.1.3.6 Waste Transfer Line Shielding

Requirement: All HCP system underground radiological waste transfer pipes shall be provided with adequate shielding to comply with ALARA goals. [Section 10.1.5.8, BOD]

Basis Discussion: Underground radiological waste transfer lines are shielded in support of meeting the target dose equivalent rate at the WTP site. Examples of adequate shielding techniques include soil, concrete, or steel. [ALARA]

Verification: Verification is expected to be achieved through the following:

Verif. Method	Verif. By	Plan	Notes/Comments
A	ENG	Perform an analysis to verify the shielding required to comply with ALARA goals.	
R	ENG	Review the design of underground radiological waste transfer lines to verify that adequate shielding is provided.	

3.6.1.3.7 Underground Piping Corrosion Protection

Requirement: HCP system underground metallic piping and fittings shall be protected from external and stray current corrosion in accordance with Natural Association of Corrosion Engineers (NACE) International Standard Practice SP 0169-2013, *Control of External Corrosion on Underground or Submerged Metallic Piping Systems*. [Section 11.1.1.1, BOD]

Basis Discussion: HCP system equipment is designed to mitigate the gradual destruction of its materials of construction by chemical reactions with the environment.

Verification: Verification is expected to be achieved through the following:

Verif. Method	Verif. By	Plan	Notes/Comments
A	ENG	Perform an analysis to verify that underground piping and fittings are protected from stray current corrosion.	
R	ENG	Review the design of underground metallic piping and fittings to verify external corrosion protection features are included.	

3.6.1.3.8 Waste Transfer Line Vehicular Impacts

Requirement: The HCP system underground piping regulated as a tank system shall be designed for protection against potential damage by vehicular traffic (WAC 173-303-640[3][a][iv]). [Section 14.10.1, BOD]

Basis Discussion: Tank systems in the HLW Facility are subject to the requirements of the Washington Administrative Code. [ALARA]

Verification: Verification is expected to be achieved through the following:

Verif. Method	Verif. By	Plan	Notes/Comments
R	ENG	Review the design of underground piping regulated as a tank system to verify it is protected from potential damage by vehicular traffic.	

3.6.2 Nuclear Safety, ALARA, Environmental, and Other Regulatory Requirements

3.6.2.1 ~~Mechanical Isolation of Utility Supply Lines~~Moved to 3.6.1.1.6

~~**Requirement:** The utility supply lines (i.e., air, steam, glass formers, plant wash, and cooling water) to the HFP vessels shall include provisions to mechanically isolate from all waste transfer lines that can potentially result in contaminating the utility supply lines. The steam supply line to the steam ejectors shall be provided with a welded fitted end fitting. The glass former feed line shall be provided with an isolation valve that interlocks closed upon indication of potential for loss of confinement. [Sections 3.4.1.7.1.5, 4.3.15, 4.3.15.1, 4.4.23, 4.4.23.1, 4.4.23.2, 5.6.14, 5.6.35, PDSA – HLW Facility][Section 7.1, 14.1, ORD][Section 5.1.2, BOD].~~

~~**Basis Discussion:** This mechanical isolation design feature (e.g., valves, blind flanges, spectacle blinds, or capped lines) ensures there is no connection between utility supply lines to prevent backflow of contamination. The steam ejectors and jumpers are not installed in the vessel during normal operations; therefore, no connection exists between the ejectors and the steam supply. [ALARA]~~

~~**Verification:** Verification is expected to be achieved through the following:~~

~~Verif. Method~~	~~Verif. By~~	~~Plan~~	~~Notes/Comments~~
~~R~~	~~ENG~~	~~Review the design to verify mechanical isolation capabilities on utility supply lines to the HFP vessels.~~	~~Documented in DVR. The steam supply line will be verified to have a welded end fitting and the GFR feed line isolation will include an interlock to close on loss of confinement signal.~~

3.6.2.2 ~~Transfer Lines Slope Between High Level Waste Facility and Pretreatment Facility~~Moved to 3.6.1.3.1

~~**Requirement:** The coaxial transfer piping from the PT Facility to the HLW Facility design shall be sloped toward the PT Facility. [Section 5.6.7, PDSA - HLW Facility] [Section 14.10.1.3, BOD] (A.1).~~

~~**Basis Discussion:** The Slope of the transfer piping towards PT is to promote self-draining. This is an ALARA feature because it allows for residual waste to transfer back to containment without being pumped back reducing the source term in the lines. For additional details on pipe sloping, refer to 24590-WTP-GPG-M-027, *Recommended Slopes for Piping Systems* and slope requirements in 24590-WTP-M6-50-00008, *P&ID Symbols and Legend Sheet 8 of 8*.~~

~~[ALARA]~~

~~**Verification:** Verification is expected to be achieved through the following:~~

~~Verif. Method~~	~~Verif. By~~	~~Plan~~	~~Notes/Comments~~
~~R~~	~~ENG~~	~~Review the design to verify coaxial piping between the PT Facility and HLW Facility is designed to drain back to the PT Facility.~~	~~Documented in DVR.~~

3.6.2.3 ~~Hydrogen Explosions~~Deleted

~~**Requirement:** The HFP piping/tubing shall maintain integrity during and after multiple internal hydrogen explosions by design and configuration. [Sections 4.4.27, 4.4.27.1, PDSA - HLW Facility][Appendix C.2.3.1, BOD].~~

~~**Basis Discussion:** The safety function of the piping/tubing in contact with waste (including safety air tubing as applicable) is to reduce the probability of a failure by providing confinement during and after multiple hydrogen explosions (Section 4.4.27.1, PDSA - HLW Facility). Hydrogen is generated within waste and water/reagents systems in piping and ancillary vessels of the HLW Facility by means of thermolysis and radiolysis. This hydrogen may build up in piping and ancillary vessels and exceed the LFL (refer to Section 4.4.27.2 of PDSA - HLW Facility). Criteria have been established for conditions where detonations in piping and in-line components due to hydrogen accumulation may be allowed. For normal operations the quantity of hydrogen must be less than that which (if detonated) would result in an explosion that stresses the pipe beyond the through-wall average elastic limit (will not fail in ductile fracture). This means the pipe confinement boundary will survive repeated explosions without repair or replacement (refer to Section 4.4.27.3 of PDSA - HLW Facility).~~

~~[ALARA]~~

~~**Verification:** Verification is expected to be achieved through the following:~~

~~Verif. Method~~	~~Verif. By~~	~~Plan~~	~~Notes/Comments~~
~~A~~	~~ENG~~	~~Perform an analysis to document the HFP piping/tubing maintains integrity during and after multiple hydrogen explosion~~	~~Documented in DVR.~~
~~R~~	~~ENG~~	~~Review of design to verify conformance to the analysis results.~~	~~Documented in DVR.~~

3.6.2.4 ~~Black Cell Seismic Evaluation~~Moved to 3.4.2.4

~~**Requirement**: The HLW HCP and HFP piping located in black cells (e.g., coaxial transfer piping, concentrate receipt piping, etc.) shall be evaluated using approved seismic category SC-I methods and acceptance criteria as defined in the SRD. [Section 16.4.2.7, BOD]~~

~~**Basis Discussion**: The HCP and HFP piping is listed in Table B-1 of the BOD, Appendix B, and is therefore allowed to be designed for the WTP site-specific ground motion. The evaluation of black cell piping to the seismic category SC-1 design basis event (DBE) provides additional protection to seismic category SC-1 SSCs during seismic events.~~

~~**Verification**: Verification is expected to be achieved through the following:~~

~~Verif. Method~~	~~Verif. By~~	~~Plan~~	~~Notes/Comments~~
~~R~~	~~ENG~~	~~Review of design to verify HLW HCP and HFP Piping located in black cells are evaluated using approved SC-I methods and acceptance criteria as defined in the SRD.~~	

3.6.2.5 HCP/HFP System Outer Coaxial Transfer Piping

Requirement: The HCP/HFP system outer coaxial transfer piping from HLW Facility penetration to the melter cave wall box, including the melter cave cross-connect piping, shall maintain confinement of the process stream by confining the solution within the annular space with drainage to a confined location. The HCP/HFP system outer coaxial piping shall confine solution for the 40-year operating life of the HLW Facility at a maximum process temperature of 150°F. [Sections 4.4.2.1.3, 4.4.2.1.4, Appendix M, HLW PDSA]

Basis Discussion: The coaxial transfer piping provides redundant barriers that prevent the release of the radiological and chemically hazardous waste material. [ALARA]

Verification: Verification is expected to be achieved through the following:

Verif. Method	Verif. By	Plan	Notes/Comments
A	ENG	Perform an analysis to verify that the HCP/HFP outer coaxial piping confines solution for the 40-year operating life of the HLW Facility at a maximum process temperature of 150°F.	
R	ENG	Review the design to verify that the HCP/HFP system outer coaxial transfer piping is designed to maintain confinement of the process stream by confining the solution within the annular space with drainage to a confined location. In addition, review the design to verify that the HCP/HFP system outer coaxial piping is designed to confine the solution for the 40 year operating life of the HLW Facility at a maximum process temperature of 150°F.	

3.6.2.6 HCP/HFP System Inner Coaxial Transfer Piping

Requirement: The HCP/HFP system inner coaxial transfer piping from HLW Facility penetration to the melter cave wall box, including the melter cave cross-connect piping, shall maintain confinement of the process stream for maximum process conditions. The HCP/HFP system inner coaxial piping shall confine solution for the 40 year operating life of the HLW Facility by having an adequate corrosion/erosion allowance of 1.86 mil/yr (74.4 mil/40

yrs), a maximum operating pressure rating of 200 psig, and a maximum process temperature of 150 °F. [Sections 4.4.2.1.3, 4.4.2.1.4, Appendix M, HLW PDSA]

Basis Discussion: The coaxial transfer piping provides redundant barriers and leak detection that prevent the release of the radiological and chemically hazardous waste material. [ALARA]

Verification: Verification is expected to be achieved through the following:

Verif. Method	Verif. By	Plan	Notes/Comments
A	ENG	Perform an analysis to verify that the HCP/HFP system inner coaxial piping has an adequate corrosion/erosion allowance of 1.86 mil/yr (74.4 mil/40 yrs), a maximum operating pressure rating of 200 psig, and a maximum process temperature of 150 °F to confine the process fluids for the 40 year operating life of the HLW Facility.	
R	ENG	Review the design to verify that the HCP/HFP system inner coaxial piping is designed to confine the solution for the 40 year operating life of the HLW Facility by having an adequate corrosion/erosion allowance of 1.86 mil/yr (74.4 mil/40 yrs), a maximum operating pressure rating of 200 psig, and a maximum process temperature of 150 °F.	

3.6.2.7 HCP/HFP System Transfer Piping Standards and Materials

Requirement: The HCP/HFP system coaxial transfer piping from the HLW Facility penetration to the melter cave wall box, include the melter cave cross-connect piping, shall be designed to ASME B31.3, as augmented by 24590-WTP-RPT-ENG-07-011, Rev 7, *HPAV Engineering Analysis Methods and Criteria* for loads from hydrogen explosions. Materials used in the construction of this piping and piping components (valves, fittings, etc.) that contain or are exposed to significant hydrogen sources shall be non-fragmenting (including austenitic stainless steel or other alloy with sufficient fracture toughness). [Sections 4.4.2.1.3, 4.4.2.1.4, Appendix M, HLW PDSA]

Basis Discussion: The use of materials with a high fracture toughness provides assurance that fragmentation will not occur because of a hydrogen event.

Verification: Verification is expected to be achieved through the following:

Verif. Method	Verif. By	Plan	Notes/Comments
R	ENG	Review the design to verify that the HCP/HFP system coaxial transfer piping is designed to ASME B31.3, as augmented by 24590-WTP-RPT-ENG-07-011, Rev 7, *HPAV Engineering Analysis Methods and Criteria* for loads from hydrogen explosions. In addition, review the design to verify that the materials used in the construction of the HCP/HFP system coaxial transfer piping and piping components (valves, fittings, etc.) that contain or are exposed to significant hydrogen sources are non-fragmenting (including austenitic stainless steel or other alloy with sufficient fracture toughness).	

3.6.2.8 HFP System Process Jumpers

Requirement: The HFP system process jumpers and inline components shall be designed to maintain bulk confinement of the process stream for maximum process conditions. The HFP system process jumpers, jumper mechanical connections, and inline components shall confine solution for the 40 year operating life of the HLW Facility by having an adequate corrosion/erosion allowance of 1.86 mil/yr (74.4 mil/40 yrs), a maximum operating pressure rating of 200 psig, and a maximum process temperature of 150 °F. [Sections 4.4.2.2.3, 4.4.2.2.4, Appendix M, HLW PDSA]

Basis Discussion: The jumper and inline component configuration of process stream transfer paths provides a reliable barrier to retain waste material during transfer operations.

Verification: Verification is expected to be achieved through the following:

Verif. Method	Verif. By	Plan	Notes/Comments
A	ENG	Perform an analysis to verify that the HFP process jumpers and inline components have an adequate corrosion/erosion allowance of 1.86 mil/yr (74.4 mil/40 yrs), a maximum operating pressure rating of 200 psig, and a maximum process temperature of 150 °F to confine the process fluids for the 40 year operating life of the HLW Facility.	
R	ENG	Review the design to verify that the HFP system process jumpers and inline components are designed to maintain confinement of the process stream for the maximum process conditions identified in the requirement.	

3.6.2.9 HFP System Process Jumpers Re-Installation

Requirement: The re-installation of HFP system process jumpers shall be performed by meeting torque and gasket replacement requirements established for the size of the jumper. [Sections 4.4.2.2.3, 4.4.2.2.4, Appendix M, HLW PDSA]

Basis Discussion: Re-installation requirements help ensure that the jumper is installed as close as possible to the original configuration prior to being disconnected. The gasket material for replacement on reinstallation is polytetrafluoroethylene or graphite impregnated polytetrafluoroethylene.

Verification: Verification is expected to be achieved through the following:

Verif. Method	Verif. By	Plan	Notes/Comments
R	ENG	Review the HFP system process jumper vendor provided maintenance procedures to verify that the reinstallation of jumpers is performed by meeting torque and gasket replacement requirements established for the size of the jumper.	

3.6.2.10 HFP System Process Jumpers Standards and Materials

Requirement: The HFP system process jumpers shall be designed to ASME B31.3, as augmented by 24590-WTP-RPT-ENG-07-011, Rev 7, *HPAV Engineering Analysis Methods and Criteria* for loads from hydrogen explosions. Materials used in the construction of HFP jumpers and inline components (valves, fittings, etc.) that

contain or are exposed to significant hydrogen sources shall be non-fragmenting (including austenitic stainless steel or other alloy with sufficient fracture toughness). [Sections 4.4.2.2.3, 4.4.2.2.4, Appendix M, HLW PDSA]

Basis Discussion: The use of materials with a high fracture toughness provide assurance that fragmentation will not occur because of a hydrogen event.

Verification: Verification is expected to be achieved through the following:

Verif. Method	Verif. By	Plan	Notes/Comments
R	ENG	Review the design to verify that the HFP system process jumpers are designed to ASME B31.3, as augmented by 24590-WTP-RPT-ENG-07-011, Rev 7, *HPAV Engineering Analysis Methods and Criteria* for loads from hydrogen explosions. In addition, review the design to verify that the materials used in the construction of HFP system process jumpers and inline components (valves, fittings, etc.) that contain or are exposed to significant hydrogen sources are non-fragmenting (including austenitic stainless steel or other alloy with sufficient fracture toughness).	

3.6.2.11 HFP System Sump Transfer Piping Codes and Standards

Requirement: The HCP/HFP system sump transfer piping from the sump steam ejector discharge shall comply with the normal fluid service provisions of national consensus codes and standards identified in the SRD (including ASME B31.3-1996, Chapters I through VI), as augmented by 24590-WTP-RPT-ENG-07-011, Rev 7, *HPAV Engineering Analysis Methods and Criteria for Loads from Hydrogen Explosions*. [Sections 4.4.2.7.3, 4.4.2.7.4, Appendix M, HLW PDSA]

Basis Discussion: The HCP/HFP system sump transfer piping reduces the probability of a release of radioactive and chemically hazardous material by providing passive confinement of high-level process waste. [ALARA]

Verification: Verification is expected to be achieved through the following:

Verif. Method	Verif. By	Plan	Notes/Comments
R	ENG	Review the design of the HCP/HFP system sump transfer piping from the sump steam ejector discharge for the listed sumps to verify compliance with the required codes and standards.	

3.6.2.12 HFP System Sump Transfer Piping Materials

Requirement: The material used in the construction of the HCP/HFP system sump transfer piping and piping components (valves, fittings, etc.) that contain or are exposed to significant hydrogen sources shall be non-fragmenting (including austenitic stainless steel or other alloy with sufficient fracture toughness). [Sections 4.4.2.7.3, 4.4.2.7.4, Appendix M, HLW PDSA]

Basis Discussion: The HCP/HFP system sump transfer piping reduces the probability of a release of radioactive and chemically hazardous material by providing passive confinement of high-level process waste. [ALARA]

Verification: Verification is expected to be achieved through the following:

Verif. Method	Verif. By	Plan	Notes/Comments
R	ENG	Review the design of the material used in the construction of sump transfer piping and piping and piping components that contain or are exposed to significant hydrogen sources to verify it is non-fragmenting	

3.6.3 System Interface Requirements

3.6.3.1 ~~PT Facility PWD, ASX, DIW - Pipe Flushing Interfaces~~Moved to 3.6.1.1.10

~~**Requirement:** The piping design shall interface with the following systems to provide flush of demineralized water (up to three line volumes) into the transfer pipe lines.[Section 6.2.1, BOD][Section 14.3, ORD](B.1, E.1, G.1).~~

- ~~**HLW concentrate piping between the PT Facility and HLW Facility MFPV**~~
  - ~~Flush water source: demineralized water system (DIW) via PWD~~
  - ~~Flush velocity range: TBD fps for slurries without glass formers~~
- ~~**HLW melter feed piping from MFPV to MFV**~~
  - ~~Flush water source: DIW system via ASX~~
  - ~~Flush velocity range: TBD fps for slurries with glass formers~~
- ~~**HLW melter feed piping from MFV to melter**~~
  - ~~Flush water source: DIW system via ASX~~
  - ~~Flush velocity range: TBD fps for slurries with glass formers~~
- ~~**HLW process waste transfer line between melter caves 1 and 2**~~
  - ~~Flush water source: DIW system via ASX~~
  - ~~Flush velocity range: TBD fps for slurries with glass formers (bounding)~~

~~**Basis Discussion:** The transfer lines are flushed to remove waste from the lines to prevent plugging and the accumulation of waste that could generate hydrogen (Sections 1.4, 4.5.1, *Minimum Flow Velocity for Slurry Lines*). A minimum flush velocity of 6 fps was determined in CCN 241253, *Response to Defense Nuclear Facilities Safety Board (DNFSB) Staff Issue Report Regarding Plugging of Process Lines, Pretreatment Facility, Waste Treatment Plant, Hanford Site* based on the test data.~~

~~[ALARA]~~

~~**Verification:** Verification is expected to be achieved through the following:~~

~~Verif. Method~~	~~Verif. By~~	~~Plan~~	~~Notes/Comments~~
~~A~~	~~ENG~~	~~Perform an analysis of the required flush paths to determine the minimum flow velocities.~~	
~~R~~	~~ENG~~	~~Review of design to verify conformance to the analysis results.~~	
~~T~~	~~SU/COM~~	~~Perform integrated system test to verify flushing velocity meets the acceptable range for the sample and transfer lines listed in the requirement above. Flushing demineralized water to not exceed three line volumes.~~	

3.6.3.2 ~~PT Facility DIW – HFP Recirculation Flushing Interface~~Deleted

~~**Requirement:** The piping design shall interface with the HFP sample recirculation piping to provide flush of demineralized water (up to three line volumes) into the transfer pipe lines.[Section 6.2.1, BOD][Section 14.3, ORD](A.3.1, A.6.1, B.1, E.1).~~

~~**Basis Discussion:** A minimum flush velocity of 6 fps was determined in CCN 241253, *Response to Defense Nuclear Facilities Safety Board (DNFSB) Staff Issue Report Regarding Plugging of Process Lines, Pretreatment Facility, Waste Treatment Plant, Hanford Site* based on the test data.~~

~~[ALARA]~~

~~**Verification:** Verification is expected to be achieved through the following:~~

~~Verif. Method~~	~~Verif. By~~	~~Plan~~	~~Notes/Comments~~
~~A~~	~~ENG~~	~~Perform an analysis of the required flush paths to determine the minimum flow velocities.~~	
~~A~~	~~ENG~~	~~Perform an analysis of the transfer and recirculation pipe lines to ensure the required flush velocity can be achieved.~~	
~~R~~	~~ENG~~	~~Review of design to verify conformance to the analysis results.~~	
~~T~~	~~SU/COM~~	~~Perform integrated system test to verify flushing velocity meets the acceptable range for the sample recirculation lines listed in the requirement above. Flushing demineralized water to not exceed three line volumes.~~	

3.6.4 Other Technical, Specialty, Operations and Maintenance Requirements

3.6.4.1 ~~Flushing, Draining, and Slopes~~Pipe Draining and Slopes with Suspended Solids

Requirement: The HCP/HFP system fluid piping design shall ~~provide the capability to be flushed and drained with~~have high point vents and low point drains, shall have no traps or pockets that can accumulate liquids or solids that ~~are not~~cannot be drained either by operator action or through free draining design, and shall be adequately sloped to drains/vessels. ~~The piping shall allow a means to break vacuum to allow gravity liquid draining.~~ [Sections 7.1, 14.3, 20.0, ORD] [Section~~s 11.4.1,~~ 16.4.2.7, BOD] ~~(B.1, E.1, G.1).~~

Basis Discussion: Pipes are drained of radioactive material if maintenance needs to be performed, and during decommissioning, which reduces dose and potential personnel contamination. Level piping for short distances through wall penetrations, at connections to equipment, and at jumpers is acceptable. Exceptions to this requirement include floor drains with plumbing traps and in-cell instrument air lines connected using flexible jumpers. ~~The piping provisions for draining and/or pumping fluid prevents lines from plugging and minimizes contamination levels during equipment maintenance and/or replacement, in support of as low as reasonably achievable (ALARA) design objectives.~~
[ALARA]

~~For additional details on pipe sloping, refer to 24590-WTP-GPG-M-027 and 24590-WTP-M6-50-00008, *P&ID Symbols and Legend Sheet 8 of 8*. Level piping for a short distance through wall penetrations, at connections to~~

~~equipment, and at jumpers is acceptable (Section 14.3, ORD). In-cell instrument air lines connected using flexible jumpers are not considered process piping and are not required to be sloped (Section 7.1, ORD).~~

Verification: Verification is expected to be achieved through the following:

Verif. Method	Verif. By	Plan	Notes/Comments
R	**ENG**	Review the HCP/HFP system fluid piping design to verify that piping is designed to drain.~~Review the design (i.e., piping and instrumentation diagrams [P&ID]) to verify flushing capabilities and that the piping is designed to break vacuum and gravity drain with no traps or pockets.~~	~~May be documented in an assessment/evaluation.~~
~~**T**~~	~~**SU/COM**~~	~~Demonstrate flushing and draining capabilities during integrated system testing.~~	~~This will be performed during the verification of requirement 3.6.3.1~~

3.6.4.2 Prevention of Water Hammer

Requirement: The HFP system ~~and HCP~~ automatic valve operator closure ~~rates~~ devices shall be sufficiently slow to prevent damage from water hammer and steam-induced water hammer. [Sections 7.1, 14.4, ORD] [Section 11.7.4, BOD]

Basis Discussion: Damaging fluid pressure transients, often referred to as water hammer, are potentially generated upon the rapid closure of automatic valves due to the sudden change in liquid flow rates.~~The HFP and HCP design considers water hammer in the design of automatic valve closure devices. The devices control the rate of valve closure to prevent damage to the piping systems from water hammer.~~

Verification: Verification is expected to be achieved through the following:

Verif. Method	Verif. By	Plan	Notes/Comments
~~**A**~~	~~**ENG**~~	~~Perform an analysis to verify the performance criteria for slow closing valve actuators is adequate to prevent water hammer during valve closure.~~	
R	**ENG**	Review the design to verify the valve stroke times conform to the results of fluid transient studies conducted for the WTP.~~Review HFP and HCP design to verify slow closing valves have been incorporated into the design where required to prevent water hammer.~~	

3.6.4.3 ~~Instrument~~ Flush Mounting Instrumentation

Requirement: HCP and HFP system ~~I~~instrumentation installed in piping with solids shall be flush-mounted. [Section 11.16, ORD]

Basis Discussion: Flush mounting prevents solids from plugging and the instrumentation from providing erroneous indications as it does not create an obstruction of flow where solids could accumulate. For example, transducers installed in a short pipe stub would fill with solids. [ALARA]

Verification: Verification is expected to be achieved through the following:

Verif. Method	Verif. By	Plan	Notes/Comments
R	**ENG**	Review the design to verify that instrumentation installed in HCP/HFP process piping with solids ~~are~~ is flush mounted.	

3.6.4.4 Clean Out Ports

Requirement: Mechanical cleanout (cleanout ports) provisions or redundancy shall be provided for high risk process piping to unplug systems where flushing has not been successful. [Section 11.16, 14.3, ORD] [Section 11.4.1, BOD]

Basis Discussion: Mechanical cleanout provisions allow operators to unplug any piping where flushing is not successful.

Verification: Verification is expected to be achieved through the following:

Verif. Method	Verif. By	Plan	Notes/Comments
R	**ENG**	Review the design of the HCP/HFP system piping that has a high risk of plugging to verify the inclusion of mechanical cleanout provisions or redundancy.	

3.6.4.5 Vacuum Breakers

Requirement: HCP/HFP system liquid piping shall include the capability to break a vacuum in a transfer line as required to allow gravity liquid draining. [Section 7.1, ORD]

Basis Discussion: The addition of a vacuum breaker to a transfer line ensure that when negative pressures occur in the pipe during operation, air will be admitted and swept in the pipe, thereby restoring normal flow. This is an ALARA feature because it allows lines to completely drain. [ALARA]

Verification: Verification is expected to be achieved through the following:

Verif. Method	Verif. By	Plan	Notes/Comments
R	**ENG**	Review the design of the HCP/HFP system liquid piping to verify that the capability to break a vacuum in a transfer line is included.	

3.6.4.6 Valve Lockout

Requirement: The HFP system valves shall be designed/procured, where possible, to support lockout using commercially manufactured devices other than chains. [Section 7.1, ORD]

Basis Discussion: The design of HFP system valves for compatibility with commercial off-the-shelf locking devices supports maintainability, operability, and testing of the valves throughout the life of the valve.

Verification: Verification is expected to be achieved through the following:

Verif. Method	Verif. By	Plan	Notes/Comments
R	ENG	Review the HFP system design to verify valves include design provisions for lockout that do not require the use of chains, where possible.	Exceptions to the requirement must be approved in accordance with Section 2.1 of the ORD.

3.6.4.7 Valve Position Indication

Requirement: The HFP system valves used in process service or supporting the process in bulges or other remote locations shall be equipped with highly reliable position indicators. [Section 14.4, ORD] [Section 11.7.4, BOD]

Basis Discussion: Highly reliable position indication is required to reduce the need for contact maintenance or for sending operators into radiation/contamination areas to verify valve positions. [ALARA]

Verification: Verification is expected to be achieved through the following:

Verif. Method	Verif. By	Plan	Notes/Comments
R	ENG	Review the design to verify that HFP system valves used in process service are equipped with highly reliable position indicators.	

3.7 Mechanical Agitator Requirements

3.7.1 Mission and Functional / Performance Requirements (Including States/Modes)

3.7.1.1 Vessel Mixing

3.7.1.1.1 Normal Mixing

Requirement: The ~~agitation design~~HFP system shall be capable of mixing the ~~HFP vessel~~MFPV and MFV contents ~~(HLW concentrate with glass formers)~~ during normal operations at an acceptable degree of homogeneity. [Section 14.14, ORD] [Section 3.1~~2.2, 4.1.2.2~~, IHLW ~~Waste Form Compliance Plan for the Hanford Tank Waste Treatment and Immobilization Plant~~] (A.2, A.5, A.9)~~.~~

Basis Discussion: ~~Acceptable homogeneity is defined within Vitreous State Laboratory testing final report, 24590-101-TSA-W000-0009-195-00003, as having a weight percent solids bias under 4%.~~ Agitation of the wastes helps prevent the build-up of settled solids. Agitation of the HFP vessels is also required to collect a representative sample of vessel contents to ensure the final product will meet waste acceptance product specifications requirements ~~(24590-HLW-WSF-ENG-07-005, *WAI Screening of HFP Sample Loop Flow Meter*). All volumes of material are continually mechanically mixed to prevent settling of solids. Testing of the mechanical agitator has been successfully conducted and the agitator impeller design attributes are documented in Part B of 24590-HLW-WIQP-MS-09-0002, WAI Item Qualification Plan for HLW Melter Feed Preparation Vessel Agitators. 24590-101-TSA-W000-0004-172-00001, Technical Basis for HLW Vitrification Stream, clarifies the agitator should be capable of mixing concentrate with glass formers with a yield stress of ≥30 Pa and a viscosity of ≥40 cP~~. [ALARA]

Verification: Verification is expected to be achieved through the following:

Verif. Method	Verif. By	Plan	Notes/Comments
A/T	ENG/ SUP	~~Perform an analysis to determine the rate of mixing required to provide a representative sample from the HFP vessels.~~Perform an analysis or supplier testing to verify the design required to provide an acceptable degree of homogeneity.	
R	ENG	Review ~~mechanical agitator~~the design to verify ~~agitation provides a homogeneous mixture~~conformance to the as-analyzed/as-tested configuration.	~~Document in the completed 24590-HLW-WIQP-MS-09-0002, WAI Item Qualification Plan for MFPV Mechanical Agitators~~
~~T~~	~~ENG (R&T)~~	~~Demonstrate the mechanical agitator operation using simulant with a yield stress and viscosity representative of HLW concentrate and glass formers.~~	~~Research and Technology (R&T) testing performed by the Vitreous State Laboratory can be found in Section 4.4.2 and Table 3.5 – High Bound, 24590-101-TSA-W000-0009-195-00003, *Pretreated Waste and Melter Feed Composition Variability Testing using HLW Simulants*~~

3.7.1.1.2 ~~Start-up Torque~~Deleted

~~**Requirement:** The mechanical agitator startup torque shall be capable of overcoming a bounding design settled solids shear strength composed of HLW concentrate and glass formers. (A.2, A.5, A.9).~~

~~**Basis Discussion:** 24590-101-TSA-W000-0004-172-00001, Technical Basis for HLW Vitrification Stream, states the agitator should be capable of overcoming a settled solids shear strength of 625 Pa. The bounding shear strength value of 625 Pa was established based on a plant upset condition where restart is attempted with a mechanical agitator immersed in a layer of settled solids.~~

~~**Verification:** Verification is expected to be achieved through the following:~~

~~Verif. Method~~	~~Verif. By~~	~~Plan~~	~~Notes/Comments~~
~~A~~	~~ENG~~	~~Perform an analysis to determine the bounding design settled solids shear strength.~~	
~~R~~	~~ENG~~	~~Review the design to verify the HFP vessel mechanical agitator is capable of overcoming a settled bounding design settled shear strength.~~	
~~T~~	~~ENG (R&T)~~	~~Demonstrate the mechanical agitator is capable of overcoming the settled solids shear strength of a simulant with maximum settled solids shear strength of ≥ 625 Pa with other rheology parameters identified on the mechanical agitator datasheets.~~	~~R&T testing performed by the Vitreous State Laboratory can be found in Section 4.4.7, Table 4.27, Figure 4.100, 24590-101-TSA-W000-0009-195-00003, *Pretreated Waste and Melter Feed Composition Variability Testing using HLW Simulants*~~

3.7.2 Nuclear Safety, ALARA, Environmental, and Other Regulatory Requirements

3.7.2.1 ~~Design Basis Event - Impeller Impact~~Deleted

~~**Requirement:** The mechanical agitator shall be designed to not have sufficient rotational energy and mass to breach the HFP vessel walls. [Sections 4.4.16.2.1, 4.4.16.2.3, 5.6.2, PDSA - HLW Facility]~~

~~**Basis Discussion:** As a result of a hazard evaluation, the failure of the MFPV or MFV walls because of the impact of a mechanical agitator impeller was deemed not credible because the maximum impact energy from the mechanical agitator impeller with the MFPV or MFV does not impart sufficient energy to breach the vessel walls (Section 3.3.3.2, PDSA - HLW Facility). The inability to breach the vessel walls at the highest rotational speeds and without waste in the vessels is considered a passive design feature.~~

~~**Verification:** Verification is expected to be achieved through the following:~~

~~Verif. Method~~	~~Verif. By~~	~~Plan~~	~~Notes/Comments~~
~~A~~	~~ENG~~	~~Perform an analysis documenting the impact of the mechanical agitator impeller against the HFP vessel walls will not result in a loss of containment/confinement.~~	~~Documented in DVR.~~
~~R~~	~~ENG~~	~~Review design to verify the mechanical agitator configuration and HFP vessel wall thickness design conforms to the analysis results.~~	~~Documented in DVR.~~

3.7.2.2 HFP System Agitator Mixing

Requirement: The HFP system agitators shall be designed to mix the vessel contents (i.e., HLW concentrate waste with glass formers) with a yield stress not exceeding 30 Pa, and a viscosity not exceeding 40 cP to limit the accumulation of trapped hydrogen in the waste below the quantity that, when released, could cause the headspace to exceed the LFL. [Sections 4.4.2.6.3, 4.4.2.6.4, Appendix M, HLW PDSA] [Sections 6.1, 6.7.3, BOD] (A.2, A.5, A.9)

Basis Discussion: The HFP system agitators provide a reliable system for the movement of waste material so that hydrogen generated in the waste solution is released on a schedule that remains within the capability of the HFP vessel purge system to maintain the gases below hydrogen concentrations capable of undergoing an explosion. The hydrogen concentration level is maintained below 25% of the LFL during normal operations and below the LFL during a loss-of-site-power event and up to a SC-III event.

Verification: Verification is expected to be achieved through the following:

Verif. Method	Verif. By	Plan	Notes/Comments
A	ENG	Perform an analysis to verify that the HFP system agitators are design to mix the vessel contents with a yield stress not exceeding 30 Pa, and a viscosity not exceeding 40 cP to limit accumulation of trapped hydrogen in the waste below the quantity that, when released, could cause the headspace to exceed the LFL.	
R	ENG	Review the design to verify that the HFP system agitators are designed in accordance with the results of the analysis.	

Verif. Method	Verif. By	Plan	Notes/Comments
T	SUP	Perform a test to verify that the HFP system agitators are capable of mixing vessel contents with a yield stress not exceeding 30 Pa, and a viscosity not exceeding 40 cP to limit accumulation of trapped hydrogen in the waste below the quantity that, when released, could cause the headspace to exceed the LFL.	

3.7.2.3 HFP System Agitator Speed

Requirement: The HFP system agitators shall be designed to operate at greater than 80 rpm to limit the accumulation of trapped hydrogen in the waste below the quantity that, when released, could cause the headspace to exceed 25% of the LFL during normal operations and below the LFL during off-normal operations. [Sections 4.4.2.6.3, 4.4.2.6.4, Appendix M, HLW PDSA]

Basis Discussion: The HFP system agitators provide a reliable system for the movement of waste material so that hydrogen generated in the waste solution is released on a schedule that remains within the capability of the HFP vessel purge system to maintain the gases below hydrogen concentrations capable of undergoing an explosion.

Verification: Verification is expected to be achieved through the following:

Verif. Method	Verif. By	Plan	Notes/Comments
R	ENG	Review the design to verify that the HFP system agitators are designed to operate at greater than 80 rpm.	
T	SUP	Perform a test to verify that the HFP vessel agitators are capable of operating at greater than 80 rpm.	

3.7.2.4 HFP System Agitator Backup Power

Requirement: The HFP system agitators shall be capable of operating intermittently, as required, on a backup power source during loss-of-site-power events. [Sections 4.4.2.6.3, 4.4.2.6.4, Appendix M, HLW PDSA] (F.2)

Basis Discussion: The energy supplied to the agitator must be sufficient to support the mixing function of the agitator (i.e., speed and duration) while the normal power supply is unavailable; the emergency power supply is not required to support continuous agitation.

Verification: Verification is expected to be achieved through the following:

Verif. Method	Verif. By	Plan	Notes/Comments
R	ENG	Review the design to verify that the HFP system agitators are capable of operating intermittently, as required, on a backup power source during loss-of-site-power events.	
T	SU/ COM	Perform a test to verify that the HFP system agitators are capable of operating intermittently, as required, on a backup power source during loss-of-site-power events.	

3.7.2.5 HFP System Agitator Speed Alarm

Requirement: The HFP system agitator speed sensors shall activate control room annunciators upon the detection of a shaft speed less than 80 rpm. [Sections 4.4.2.6.3, 4.4.2.6.4, Appendix M, HLW PDSA]

Basis Discussion: The speed sensing equipment continuously monitors the rotational speed of the agitator shaft, and generates a trip signal to the PPJ system on observation of speed beneath the instrument setpoint.

Verification: Verification is expected to be achieved through the following:

Verif. Method	Verif. By	Plan	Notes/Comments
R	ENG	Review the design to verify that the HFP system agitator speed sensors activate control room annunciators upon the detection of a shaft speed less than 80 rpm.	
T	SU/ COM	Perform a test to verify that the HFP system agitator speed sensors activate control room annunciators upon the detection of a shaft speed less than 80 rpm.	

3.7.2.6 HFP System Agitator Indication

Requirement: The HFP system agitator indicators shall provide positive indication of adequate mixing. The HFP system agitator power sensors shall activate control room annunciators upon the detection of an adjustable speed drive (ASD) power output indicative of agitator or upstream power supply failure. [Sections 4.4.2.6.3, 4.4.2.6.4, Appendix M, HLW PDSA] (A.2, A.5, A.9)

Basis Discussion: The speed sensing equipment continuously monitors the rotational speed of the agitator shaft, and generates a trip signal to the PPJ system on observation of speed beneath the instrument setpoint.

Verification: Verification is expected to be achieved through the following:

Verif. Method	Verif. By	Plan	Notes/Comments
R	ENG	Review the design to verify that the HFP system agitators provide positive indication of adequate mixing and that the power sensors activate control room annunciators upon the detection of an ASD power output indicative of agitator or upstream power supply failure.	
T	SU/ COM	Perform a test to verify that the agitator power sensors activate control room annunciators upon the detection of an ASD power output indicative of agitator or upstream power supply failure.	

3.7.3 System Interface Requirements

None.

3.7.4 Other Technical, Specialty, Operations and Maintenance Requirements

None.

3.8 ~~Air Sparger Requirements~~Deleted

~~3.8.1 Mission and Functional / Performance Requirements (Including States/Modes)~~

~~None.~~

~~3.8.2 Nuclear Safety, ALARA, Environmental, and Other Regulatory Requirements~~

~~3.8.2.1 Vessel Hydrogen Release~~

~~**Requirement:** [**HOLD**] The HFP vessels shall be capable of mixing the waste to release hydrogen and maintain vessel headspace hydrogen concentration level below the LFL. [Sections 4.3.8, 4.3.8.2, PDSA - HLW Facility](I.1, I.2).~~

~~**Basis Discussion:** This requirement and HFP vessel sparge tube design are on "[**HOLD**]" due to the differences between the SDS and the PDSA - HLW Facility and the resolution is expected to eliminate sparging. The PDSA references utilization of a sparge tube design to for hydrogen mitigation while the SDS offers multiple hydrogen mitigation options; not including air sparging.~~

~~**Verification:** Verification is expected to be achieved through the following:~~

~~Verif. Method~~	~~Verif. By~~	~~Plan~~	~~Notes/Comments~~
~~A~~	~~ENG~~	~~Perform an analysis to verify the design is capable of mixing the waste to release hydrogen and maintain vessel contents below the LFL.~~	
~~R~~	~~ENG~~	~~Review of design to verify conformance to the analysis~~	~~Documented in DVR.~~

~~3.8.2.2 Sparger Wide-Mouth End~~

~~**Requirement:** [**HOLD**] The HFP vessel sparger design shall have a wide-mouth end. [Sections 4.3.8.2, 4.3.8.4, 5.6.5, PDSA - HLW Facility].~~

~~**Basis Discussion:** The spargers are designed with a wide-mouth end to reduce the likelihood of plugging. This requirement and HFP vessel sparge tube design are on "[**HOLD**]" due to the differences between the SDS and the PDSA - HLW Facility and the resolution is expected to eliminate sparging. The PDSA references utilization of a sparge tube design to for hydrogen mitigation while the SDS offers multiple hydrogen mitigation options; not including air sparging. [ALARA]~~

~~**Verification:** Verification is expected to be achieved through the following:~~

~~Verif. Method~~	~~Verif. By~~	~~Plan~~	~~Notes/Comments~~
~~R~~	~~ENG~~	~~Review of design to verify the spargers have a wide-mouth end.~~	~~Documented in DVR.~~

~~3.8.3 System Interface Requirements~~

~~3.8.3.1 Instrument Service Air System- Normal Air Purge (Hydrogen Mitigation and Prevent Plugging)~~

~~**Requirement:** [**HOLD**] The HFP vessel spargers shall interface with the ISA system to provide a continuous idle air purge of at least 200 times the maximum calculated hydrogen generation rate (HGR) through the spargers. [Sections 3.3.5.2.3, 4.3.8.4, PDSA - HLW Facility] [Section 6.1, BOD](I.1, M.1.1).~~

~~**Basis Discussion:** NFPA 69-2002, Section 8.3.1, "Standard on Explosion Prevention Systems," states, "The combustible concentration shall be maintained at or below 25 percent of the LFL." A dilution rate of 200 times the HGR equates to approximately 0.5 vol % of hydrogen (where 1 vol % is a hydrogen concentration of approximately 25 % of the LFL). This requirement and HFP vessel sparge tube design are on "[**HOLD**]" due to the differences between the SDS and the PDSA - HLW Facility and the resolution is expected to eliminate sparging. The PDSA references utilization of a sparge tube design to for hydrogen mitigation while the SDS offers multiple hydrogen mitigation options; not including air sparging.~~
~~The normal air purge, through the spargers, provides a volumetric flow rate of at least 200 times the maximum calculated hydrogen generation rate (HGR), which maintains the maximum hydrogen concentration less than 0.5 % of the minimum headspace volume during normal operation. Calculation 24590-WTP-M4C-V11T-00011, *Revised Calculation of Hydrogen Generation Rates and Times to Lower Flammability Limit for WTP*, provides the HGR and time to LFL for the HFP vessels.~~

~~**Verification:** Verification is expected to be achieved through the following:~~

~~Verif. Method~~	~~Verif. By~~	~~Plan~~	~~Notes/Comments~~
~~A~~	~~ENG~~	~~Perform an analysis to verify the ISA provides air purge supply to the spargers of at least 200 times the maximum HGR.~~	~~Documented in DVR.~~
~~R~~	~~ENG~~	~~Review of design to verify the ISA will provide an idle air purge of at least 200 times the maximum HGR.~~	~~Documented in DVR~~
~~T~~	~~SU/COM~~	~~Perform integrated system test to verify the ISA provides air purge supply to the spargers of at least 200 times the maximum HGR.~~	~~Documented in DVR.~~

~~3.8.3.2 Instrument Service Air System - Design Basis Event (Air Sparging)~~

~~**Requirement:** [**HOLD**] The HFP vessel sparger design shall interface with the ISA system to provide emergency sparge mode (air sparging) at a minimum of 42 standard cubic feet per minute (scfm) for each sparger tube, which is supplied upon mechanical agitator failure or following a seismic DBE (or other loss of mechanical agitaton). [Sections 4.3.8, PDSA - HLW Facility](I.2, M.2.5).~~

~~**Basis Discussion:** Air sparging provides the capability to mix the vessel contents during and after a seismic DBE or other circumstance where the mechanical agitator is unavailable. Air sparging reduces the potential for a hydrogen explosion. This requirement and HFP vessel sparge tube design are on "[**HOLD**]" due to the differences between the SDS and the PDSA - HLW Facility and the resolution is expected to eliminate sparging. The PDSA references utilization of a sparge tube design to for hydrogen mitigation while the SDS offers multiple hydrogen mitigation options; not including air sparging.. Air sparging ensures the waste stays mobilized reducing the build-up of solids and is therefore considered an ALARA feature.~~

~~[ALARA]~~

~~**Verification:** Verification is expected to be achieved through the following:~~

~~**Verif. Method**~~	~~**Verif. By**~~	~~**Plan**~~	~~**Notes/Comments**~~
~~**A**~~	~~**ENG**~~	~~Perform an analysis to verify a minimum of 42 scfm for each sparge tube is supplied upon mechanical agitator failure or a seismic DBE.~~	
~~**T**~~	~~**SU/COM**~~	~~Perform integrated system test to verify ISA system provides emergency air sparging supply to the spargers at the minimum design flow rate 42 scfm/sparger tube.~~	~~Documented in DVR.~~

~~3.8.4 Other Technical, Specialty, Operations and Maintenance Requirements~~

~~3.8.4.1 Sparger Flushing and Draining~~

~~**Requirement:** [**HOLD**] The HFP vessel spargers design shall be flushable and fully drainable. [Sections 4.3.8.2, 5.6.5, PDSA - HLW Facility][Section 11.4.1, BOD](D.1.2).~~

~~**Basis Discussion:** The DIW system provides flush water to the sparger lines into the HFP vessels to prevent plugging of the sparger lines. Each tube is equipped with a fitting to allow insertion of a mechanical cleaning device to facilitate unplugging, if needed. The flush water also provides the capability to dilute and overflow the vessel contents onto the melter cave floor during a seismic DBE, if needed, to reduce the potential for a hydrogen explosion. This dilutes and spreads out the vessel contents in such a way that hydrogen gas is not retained in the waste. This requirement and HFP vessel sparge tube design are on "[**HOLD**]" due to the differences between the SDS and the PDSA - HLW Facility and the resolution is expected to eliminate sparging. The PDSA references utilization of a sparge tube design to for hydrogen mitigation while the SDS offers multiple hydrogen mitigation options; not including air sparging. [ALARA]~~

~~**Verification:** Verification is expected to be achieved through the following:~~

~~**Verif. Method**~~	~~**Verif. By**~~	~~**Plan**~~	~~**Notes/Comments**~~
~~**R**~~	~~**ENG**~~	~~Review of the system design to verify capability to flush and drain the spargers.~~	~~Documented in DVR.~~

3.9 Pump Requirements

3.9.1 Mission and Functional / Performance Requirements (Including States/Modes)

~~Refer to Sections 3.4.1.1.1 and 3.4.1.1.2.~~

3.9.1.1 ~~Sample/Transfer Pumps~~Deleted

~~3.9.1.1.1 Backflushing Pumps~~

~~**Requirement:** The sample/transfer pumps shall have the capability to be backflushed. [Sections 14.3, 20.0, ORD][Sections 6.2.1, 6.3.3, 11.3.2 , BOD].~~

~~**Basis Discussion:** Backflushing the sample/transfer pumps will help to remove waste and prevent plugging (refer to Section 4.1.4 of 24590-HLW-TB-ENG-13-0002, *Engineering Design Decision for HLW HFP* and Section~~

~~4.10.5 of 24590-HLW-ES-ENG-13-003, *Risk Reduction Study for the High Level Waste (HLW) Facility: Failure Modes, Effects, and Criticality Analysis (FMECA), In-Service Inspection (ISI), and Plugging).*~~

~~[ALARA]~~

~~**Verification:** Verification is expected to be achieved through the following:~~

~~Verif. Method~~	~~Verif. By~~	~~Plan~~	~~Notes/Comments~~
~~R~~	~~ENG~~	~~Review of the design to verify sample/transfer pumps have the capability of being backflushed.~~	

3.9.1.2 Melter Feed (Air Displacement Slurry) Pumps

Requirement: The MFVs shall use ADS pumps for transferring melter feed to the melters. [Section~~s 11.7.4,~~ 15.3.3, BOD] (A.10)~~.~~

Basis Discussion: The ADS pumps provide a pulsed transfer rate of HLW supply for glass production. The ADS pumps use air as the motive force to push slurry into the melter. The melter feed is transferred from the MFVs to the HLW melter feed nozzles by dedicated ADS pumps and feed lines to support melter design capacity. [ALARA]

Verification: Verification is expected to be achieved through the following:

Verif. Method	Verif. By	Plan	Notes/Comments
R	ENG	Review ~~of~~ the design to verify the incorporation of ADS pumps to transfer feed from the MFVs to the melters.	~~Documented in DVR.~~

3.9.2 Nuclear Safety, ALARA, Environmental, and Other Regulatory Requirements

3.9.2.1 ~~Sample/Transfer~~Sump Pumps/Ejectors Transfer Rate

Requirement: The HFP system sump pumps/ejectors that operate in areas regulated as tank system or ancillary equipment secondary containment shall remove leaks, spills, or accumulated liquid from the secondary containment system within 24 hours of leak detection or in as timely a manner as possible (WAC 173-303-640[4][c][iv]). [Sections 14.10.1.2, 14.10.1.3, BOD] (D.2)

Basis Discussion: Tank systems in the HLW Facility are subject to the requirements of the Washington Administrative Code. [ALARA]

Verification: Verification is expected to be achieved through the following:

Verif. Method	Verif. By	Plan	Notes/Comments
A	ENG	Perform an analysis to verify the minimum transfer rate associated with removing accumulated liquid from secondary containment systems within 24 hours of leak detection.	
R	ENG	Review the design of the HFP system sump pumps/ejectors to verify the minimum transfer rate conforms with the results of the analysis.	

Verif. Method	Verif. By	Plan	Notes/Comments
T	SU/ COM	Perform test to verify HFP sump pumps/ejectors are capable of meeting the required transfer rate.	

~~None.~~

3.9.2.2 ~~Melter Feed (Air Displacement Slurry) Pumps~~Deleted

~~3.9.2.2.1 Nuclear Safety Design~~

~~**Requirement:** The ADS pumps shall be designed with a minimum of schedule 80S equivalent housing and a 5/8 in. internal baffle plate to maintain confinement during multiple hydrogen explosions. ADS pumps shall be designed as pressure vessels. [Appendix C, SRD][Sections 4.4.27.1, 4.4.27.3, 4.4.27.4, 5.6.34, PDSA - HLW Facility].~~

~~**Basis Discussion:** The safety function of the ADS pumps is to reduce the probability of a release by providing confinement during a hydrogen explosion. Design per the indicated standards within the Code of Record to provide for a robust design.~~

~~**Verification:** Verification is expected to be achieved through the following:~~

~~Verif. Method~~	~~Verif. By~~	~~Plan~~	~~Notes/Comments~~
~~R~~	~~ENG~~	~~Review of the ADS pump design to verify the use of a minimum schedule 80S equivalent housing, a 5/8 in. internal baffle plate, and designed as pressure vessels.~~	~~Documented in DVR.~~

3.9.3 System Interface Requirements

3.9.3.1 ~~Sample/Transfer Pumps~~Deleted

~~3.9.3.1.1 Demineralized Water - Pump Priming~~

~~**Requirement:** The sample/transfer pumps shall interface with the PWD system to receive water for priming. (D.1.1).~~

~~**Basis Discussion:** The MFPV sample/transfer pumps use demineralized water for priming to clear the pump and to initiate pumping without waste transfer until pump reaches operating capacity.~~

~~**Verification:** Verification is expected to be achieved through the following:~~

~~Verif. Method~~	~~Verif. By~~	~~Plan~~	~~Notes/Comments~~
~~A~~	~~ENG~~	~~Perform an analysis to determine the pressure and flow required to provide motive force for the operating ADS pumps~~	
~~R~~	~~ENG~~	~~Review of design to verify the sample/transfer pumps interface with PWD to receive water for priming.~~	
~~T~~	~~SU/COM~~	~~Perform an integrated system demonstration to verify the demineralized water supply successfully primes the sample/transfer pumps.~~	

3.9.3.2 ~~Melter Feed (Air Displacement Slurry) Pumps~~Deleted

~~3.9.3.2.1 Instrument Service Air - Air Supply~~

~~**Requirement:** The ADS pumps shall interface with the ISA system to receive air supply to provide the motive force for operating the ADS pumps. (A.10, I.3)~~

~~**Basis Discussion:** The ADS pump motive force is compressed air, which acts to push the slurry using a pulsed flow. The ADS pumps and self-clearing air flush is considered an ALARA feature.~~

~~[ALARA]~~

~~**Verification:** Verification is expected to be achieved through the following:~~

~~Verif. Method~~	~~Verif. By~~	~~Plan~~	~~Notes/Comments~~
~~R~~	~~ENG~~	~~Review of design to verify ISA system will provide motive force for operating ADS pumps.~~	
~~T~~	~~SU/COM~~	~~Perform a test to verify the ISA provides adequate force to operate the ADS pumps at the required transfer rate.~~	~~This will be performed during the verification of requirement 3.4.1.1.2~~

3.9.4 Other Technical, Specialty, Operations and Maintenance Requirements

3.9.4.1 Pump Seals

Requirement: Pump seals or other design features, upon failure, shall not provide a pathway for liquids or gases to personnel or to the environment. [Section 14.1, ORD]

Basis Discussion: The spread of contaminants (liquids or gases) to personnel or to the environment is minimized by using pump seals or other design features. [ALARA]

Verification: Verification is expected to be achieved through the following:

Verif. Method	Verif. By	Plan	Notes/Comments
R	ENG	Review the design to verify that the HFP system pump seals, or other design features, do not provide a pathway for liquids to personnel or to the environment.	

3.9.4.2 Steam Collapse Prevention

Requirement: The steam ejectors shall be provided with the capability to prevent collapse of steam and the resulting backflow of contamination. [Section 14.1, ORD]

Basis Discussion: An example of this capability would be an automatic air blow when the steam is shut off. This requirement is ALARA because it prevents the spread of contamination from high contamination areas to low contamination areas. [ALARA]

Verification: Verification is expected to be achieved through the following:

Verif. Method	Verif. By	Plan	Notes/Comments
R	ENG	Review the design to verify that steam ejectors and associated components have the capability to prevent collapse of steam and the resulting backflow of contamination.	

3.9.4.3 Pump Motors

Requirement: The following requirements apply to HFP system pump motors:

- Motors shall be squirrel-caged induction type, except for specialized applications
- Motors in hazardous locations shall have enclosures constructed for the area in which they are installed
- Motors powered from adjustable speed drives shall be definite-purpose inverter fed polyphase type
- Premium efficiency motors shall be used, where practical
- If required, the run times of selected higher horsepower motors shall be monitored
- Motors shall not be located within black cells or hard-to-reach areas

[Sections 8.4.8, 16.4.6, BOD] [Sections 7.1, 16.1, ORD]

Basis Discussion: Motors should be qualified to function in the environment in which they are installed. The selection of enclosures considers the specific conditions of the installation location.

Verification: Verification is expected to be achieved through the following:

Verif. Method	Verif. By	Plan	Notes/Comments
R	ENG	Review the design of HFP system pump motors to verify adherence to the criteria listed in the requirement.	

3.9.4.4 Vacuum Ejector Maintenance

Requirement: Provisions shall be made for the maintenance or replacement of HFP system vacuum ejectors if they are unable to sustain a 40-year life or redundant units are not available. [Section 14.1, ORD] [Section 11.3.2.6, BOD]

Basis Discussion: Vacuum ejectors are subject to continuous duty and therefore can suffer from erosion and loss of efficiency. Redundant units should be installed in the design to allow for continuous system availability.

Verification: Verification is expected to be achieved through the following:

Verif. Method	Verif. By	Plan	Notes/Comments
R	ENG	Review the design to verify that provisions for maintenance or replacement of vacuum ejectors are provided if the units are unable to sustain a 40-year life or redundant units are not provided in the design.	

~~None.~~

3.10 Monitoring and Controls Requirements

3.10.1 Mission and Functional / Performance Requirements (Including States/Modes)

3.10.1.1 ~~Vessels~~Deleted

~~3.10.1.1.1 Temperature~~

~~**Requirement:** The HFP vessels shall include temperature-sensing capability and interface with the process control system (PCJ) to remotely monitor temperature of the waste. (M.1.1).~~

~~**Basis Discussion:** Temperature monitoring provides the capability to ensure processing conditions are maintained between the minimum and maximum operating temperature values.~~

~~**Verification:** Verification is expected to be achieved through the following:~~

~~Verif. Method~~	~~Verif. By~~	~~Plan~~	~~Notes/Comments~~
~~R~~	~~ENG~~	~~Review of design to verify the capability to remotely monitor the vessel temperature.~~	
~~T~~	~~SU/COM~~	~~Demonstrate the capability to verify remote monitoring of the HFP vessel temperature in the facility control room.~~	

~~3.10.1.1.2 Pressure~~

~~**Requirement:** The HFP vessels shall include pressure-sensing capability and interface with the PCJ system to remotely monitor pressure within the vessels. (M.1.1).~~

~~**Basis Discussion:** Pressure is monitored to provide processing feedback of the HLW melter feed conditions inside the HFP vessels. The system senses operating conditions and reports data to the PCJ.~~

~~**Verification:** Verification is expected to be achieved through the following:~~

~~Verif. Method~~	~~Verif. By~~	~~Plan~~	~~Notes/Comments~~
~~R~~	~~ENG~~	~~Review of design to verify the capability to remotely monitor the vessel pressure.~~	
~~T~~	~~SU/COM~~	~~Demonstrate the capability to verify remotely monitoring of the HFP vessel pressure in the facility control room.~~	

~~3.10.1.1.3 Level Detection~~

~~**Requirement:** The HFP vessels shall include level sensing monitoring with remote indication. The programmable protection system (PPJ) shall provide the level detection capabilities for safety control. [Sections 4.4.4, 4.4.4.1, 4.4.4.3, PDSA - HLW Facility] [Section 3.1, 4.1.1.2, IHLW Waste Form Compliance Plan for the Hanford Tank Waste Treatment and Immobilization Plant] [Section 14.10.1.1, BOD] [Section 14.4, ORD](M.1.1, M.2.9).~~

~~**Basis Discussion:** Level is monitored to ensure the batch transfer is successfully completed to the desired vessel level and does not exceed the maximum operating batch volume. Vessel level indication is WAI impacting due to~~

~~its input to the glass former addition algorithm (section 6.7 of 24590-HLW-WSF-ENG-07-005). Level Detection is achieved with radar and bubbler type instrumentation. HFP Vessel level instruments (HFP-VSL-00001/00005/00002/00006) are Dangerous Waste Permit instruments as defined in Appendix 10.13 of the DWP. The batch level is also used by the glass formulation algorithm to determine the feed batch volume transferred to the MFV. The SS interlock is discussed in Section 3.10.2.1.~~

~~**Verification:** Verification is expected to be achieved through the following:~~

~~Verif. Method~~	~~Verif. By~~	~~Plan~~	~~Notes/Comments~~
~~R~~	~~ENG~~	~~Review of the design to verify the capability to remotely measure the HFP vessel content level using the PPJ for safety control.~~	~~See WAI item Qualification plan 24590-HLW-WIQP-J-10-0001~~

~~**3.10.1.1.4 Level Accuracy**~~

~~**Requirement:** The MFPV radar level instrument shall have an overall accuracy capable of providing the required input to the glass formulation algorithm, within the normal level operating range of the vessel, in accordance with the WAI requirement. The PPJ system shall provide the level detection capabilities for safety control. [Section 3.1, 4.1.1.2, IHLW Waste Form Compliance Plan for the Hanford Tank Waste Treatment and Immobilization Plant] (M.1.1, M.2.9).~~

~~**Basis Discussion:** The batch level is also used by the glass formulation algorithm to determine the feed batch volume that is transferred to the MFV. Because level instruments 24590-HLW-JL-HFP-LT-0051 and 24590-HLW-JL-HFP-LT-2051 provide information used to confirm the product meets the requirements of 24590-HLW-PL-RT-07-0001, *IHLW Waste Form Compliance Plan for the Hanford Tank Waste Treatment and Immobilization Plant*, they are given a WAI Performance SSC characteristic. The key WAI attribute for the level measurement instrument is an accuracy of ±2 % (refer to Section 6.7.2 of 24590-HLW-WSF-ENG-07-005, *WAI Screening of HLW Glass Chemistry Processing Activities*). In addition, the related SS interlock is discussed in Section 3.10.2.2.1.~~

~~**Verification:** Verification is expected to be achieved through the following:~~

~~Verif. Method~~	~~Verif. By~~	~~Plan~~	~~Notes/Comments~~
~~A~~	~~ENG~~	~~Perform an analysis to determine the overall accuracy for the required input to the glass formulation algorithm.~~	~~See WAI item Qualification plan 24590-HLW-WIQP-J-10-0001 for level accuracy.~~
~~R~~	~~ENG~~	~~Review design documents to verify overall full-scale instrument accuracy for the MFPV radar level instrument system aligns with the analysis provides the required input to the glass former algorithm.~~	~~24590-HLW-WSF-ENG-07-005 indicates the WAI instrument accuracy to be ±2 %.~~
~~R~~	~~ENG~~	~~Review the design to verify the PPJ system provides level detection capabilities for safety control.~~	
~~T~~	~~SU/COM~~	~~Perform integrated system test to verify the radar level instrument system has an overall full-scale accuracy that aligns with the analysis to provide the required input for the normal level operating range to the glass former algorithm.~~	~~24590-HLW-WSF-ENG-07-005 indicates the WAI instrument accuracy to be ±2 %.~~

3.10.1.2 ~~Mechanical Agitators~~Deleted

~~3.10.1.2.1 Dual Speed Sensors~~

~~**Requirement: [HOLD]** The design shall include dual safety calibrated speed sensors to measure rotation speed of the mechanical agitator shaft . Speed sensors shall also be used for WAI. [Section 3.1, IHLW Waste Form Compliance Plan for the Hanford Tank Waste Treatment and Immobilization Plant] [Sections 4.3.8, 4.3.8.2, PDSA - HLW Facility](M.2.6).~~

~~**Basis Discussion:** The mechanical agitator speed sensors provide both WAI monitoring of the agitator rotational speed to ensure waste is being sufficiently mixed, and a safety function to detect agitator failure (which would necessitate a shift to emergency sparging). The rotational speed is WAI due to impacts on mixing and sampling (24590-HLW-WSF-ENG-07-005, *WAI Screening of HFP Sample Loop Flow Meter*). The PDSA states that agitator interlocks must be in alignment with "Reliability per IEEE 338, IEEE 379, and IEEE 384." This means both speed sensors must be classified as safety. This requirement and mechanical agitator speed sensor design are on "[**HOLD**]" due to differences between the SDS and the PDSA - HLW Facility and the resolution is expected to eliminate sparging and downgrade the safety classification of the speed sensors.~~

~~**Verification:** Verification is expected to be achieved through the following:~~

~~Verif. Method~~	~~Verif. By~~	~~Plan~~	~~Notes/Comments~~
~~R~~	~~ENG~~	~~Review of the system design to verify the two safety mechanical agitator speed sensors are provided.~~	~~Documented in DVR.~~

~~3.10.1.2.2 Dual Motor Power Sensors~~

~~**Requirement: [HOLD]** The design shall include dual safety sensors to measure mechanical agitator motor power. [Sections 4.3.8, 4.3.8.2, PDSA - HLW Facility](M.2.7).~~

~~**Basis Discussion:** The mechanical agitator power sensors provide safety monitoring of the agitator motor power to detect a failure. The PDSA states that agitator interlocks must be in alignment with "Reliability per IEEE 338, IEEE 379, and IEEE 384." This means both power sensors must be classified as safety. This requirement and mechanical agitator speed sensor design are on "[**HOLD**]" due to differences between the SDS and the PDSA - HLW Facility and the resolution is expected to eliminate sparging and downgrade the safety classification of the speed sensors.~~

~~**Verification:** Verification is expected to be achieved through the following:~~

~~Verif. Method~~	~~Verif. By~~	~~Plan~~	~~Notes/Comments~~
~~R~~	~~ENG~~	~~Review of the system design to verify two safety mechanical agitator power sensors are provided.~~	~~Documented in DVR.~~

~~3.10.1.2.3 Agitator Failure Detection~~

~~**Requirement:** Mechanical agitator motors speed and power status signals shall interface with the PPJ system for remote monitoring. [Sections 3.4.1.7.2.5, 4.3.8, 5.5.4.1, PDSA - HLW Facility](M.2.4, M.2.5, M.2.6).~~

~~**Basis Discussion:** The safety basis requires this to be an automated function controlled by the PPJ system.~~

~~**Verification:** Verification is expected to be achieved through the following:~~

~~**Verif. Method**~~	~~**Verif. By**~~	~~**Plan**~~	~~**Notes/Comments**~~
~~**R**~~	~~**ENG**~~	~~Review the design to verify interface between the mechanical agitator speed and power sensor signals and the PPJ.~~	~~Documented in DVR.~~
~~**T**~~	~~**SU/COM**~~	~~Demonstrate the capability to remotely monitor agitator speed and power in the facility control room.~~	

3.10.1.3 ~~Spargers~~Deleted

~~3.10.1.3.1 Flow Rate~~

~~**Requirement:** [**HOLD**] The HFP vessel sparger design shall include the capability to monitor the airflow rate supply to the spargers and interface with the PCJ system to remotely monitor the sparger flow rate. [Sections 4.3.8, 4.3.8.2, 5.5.4.2, PDSA - HLW Facility](M.1.1).~~

~~**Basis Discussion:** The flow sensors ensure HFP vessels spargers are operational and ensure the HLW Facility hydrogen mitigation system is functional. This requirement and HFP vessel sparge tube design are on "[**HOLD**]" due to the differences between the SDS and the PDSA - HLW Facility and the resolution is expected to eliminate sparging. The PDSA references utilization of a sparge tube design to for hydrogen mitigation while the SDS offers multiple hydrogen mitigation options; not including air sparging. arge tube airflow meets the SC single failure criteria.~~

~~**Verification:** Verification is expected to be achieved through the following:~~

~~**Verif. Method**~~	~~**Verif. By**~~	~~**Plan**~~	~~**Notes/Comments**~~
~~**R**~~	~~**ENG**~~	~~Review of the design to verify the capability exists to monitor flow through each sparger from the PCJ system.~~	~~Documented in DVR.~~
~~**T**~~	~~**SU/COM**~~	~~Demonstrate the capability to monitor the sparger airflow rates using the PCJ.~~	~~This will be performed during the verification of requirements 3.8.3.1 and 3.8.3.2.~~

~~3.10.1.3.2 Intermittent Emergency Sparge Mode~~

~~**Requirement:** [**HOLD**] The sparger valves shall interface with the PPJ system to receive a signal to initiate emergency sparge mode (air sparger) and to provide intermittent airflow to the spargers when the mechanical agitator is unavailable, after a seismic DBE, or due to agitator failure. Intermittent emergency sparging, of the HFP vessels, shall be performed sequentially such that no more than one vessel is being sparged at the same time and that the required airflow in each vessel is achieved. [Sections 4.3.8.2, 4.3.8.3.1, PDSA - HLW Facility](M.2.4, M.2.5).~~

~~**Basis Discussion:** The emergency sparge mode intervals are based on the waste characteristics and the time to LFL for the bounding HGR, as determined in 24590-WTP-M4C-V11T-00011, *Revised Calculation of Hydrogen Generation Rates and Times to Lower Flammability Limit for WTP*. Normal idle sparge mode still continues during the quiescent emergency sparge mode (air sparging) intervals. This requirement and HFP vessel sparge tube design are on "[**HOLD**]" due to the differences between the SDS and the PDSA - HLW Facility and the resolution is expected to eliminate sparging. The PDSA references utilization of a sparge tube design to for hydrogen mitigation while the SDS offers multiple hydrogen mitigation options; not including air sparging~~

~~**Verification:** Verification is expected to be achieved through the following:~~

~~**Verif. Method**~~	~~**Verif. By**~~	~~**Plan**~~	~~**Notes/Comments**~~
~~**R**~~	~~**ENG**~~	~~Review of the control system design to verify capability to provide intermittent air supply to the HFP vessels spargers.~~	~~Documented in DVR.~~
~~**T**~~	~~**SU/COM**~~	~~Demonstrate the capability to initiate emergency sparge air flow when the PPJ receives a signal following a seismic event or loss of agitator.~~	

~~**3.10.1.3.3 Safety Air Control Valves**~~

~~**Requirement:** [**HOLD**] The system design shall include ISA safety air control valves that control the HFP vessel spargers air supply and provide Safety purge ISA on a loss of the normal non-Safety purge ISA. [Sections 4.3.8, 4.3.8.3.1, 4.3.8.2, PDSA - HLW Facility](M.2.5, M.2.8).~~

~~**Basis Discussion:** ISA safety control valves ensure HFP vessels spargers are supplied with air from either the non-Safety ISA or Safety ISA systems. The safety air control valves are designed to maintain operations post seismic DBE by switching from the non-Safety ISA system to the Safety ISA system. The safety air control valves meet the single failure criteria. Check valves separate the HLW ISA normal air supply from the safety air supply. The check valves close if pressure is lost in the HLW ISA, preventing safety air from flowing out of a potentially failed ISA supply system. This ensures that safety air flows to the sparge tubes and does not backflow through unpressurized HLW ISA piping. This requirement and HFP vessel sparge tube design are on "[**HOLD**]" due to the differences between the SDS and the PDSA - HLW Facility and the resolution is expected to eliminate sparging. The PDSA references utilization of a sparge tube design to for hydrogen mitigation while the SDS offers multiple hydrogen mitigation options; not including air sparging~~

~~**Verification:** Verification is expected to be achieved through the following:~~

~~**Verif. Method**~~	~~**Verif. By**~~	~~**Plan**~~	~~**Notes/Comments**~~
~~**A**~~	~~**ENG**~~	~~Perform an analysis to determine the setpoint required to transition from the non-safety to safety purge ISA.~~	
~~**R**~~	~~**ENG**~~	~~Review design for ISA safety air control valves and verify the capability to change valve position by the PPJ when flow rate drops below the setpoint.~~	~~Documented in DVR.~~
~~**T**~~	~~**SU/COM**~~	~~Perform a test to verify the ISA safety air control valves switch from non-safety purge ISA to safety ISA supply to the spargers when the flow rate drops below the setpoint.~~	~~This will be performed during the verification of requirement 3.10.2.1.3~~

3.10.1.4 ~~Pumps~~Deleted

~~**3.10.1.4.1 Flow Rate to Autosampling System**~~

~~**Requirement:** The MFPV sample line to the ASX shall include a calibrated flow meter to measure the sample stream flow rate. [Section 3.1, IHLW Waste Form Compliance Plan for the Hanford Tank Waste Treatment and Immobilization Plant] (M.1.1).~~

~~**Basis Discussion:** The ASX is required to collect a representative melter feed slurry sample from each batch in the HFP MFPVs. Flow rate measurement verifies the transfer rate is high enough to maintain a well-mixed sample at the ASX. If the collected samples are not representative, it could result in a false indication that the batch is qualified and be transferred into the MFVs for injection into the melter. 24590-WTP-J0-50-00012, *Controls & Instrumentation In-line Flow Devices Straight Run Requirements* and CCN 199857, *Modulating Control Valve Straight Run Guidelines* provides the guidelines for straight run requirements to ensure accurate flow measurement.~~

~~**Verification:** Verification is expected to be achieved through the following:~~

~~**Verif. Method**~~	~~**Verif. By**~~	~~**Plan**~~	~~**Notes/Comments**~~
~~**R**~~	~~**ENG**~~	~~Review sample line and pump design to verify that flow profile at flow meter meets meter requirements for accurate flow measurement per 24590-WTP-J0-50-00012, *Controls & Instrumentation In-line Flow Devices Straight Run Requirements* and CCN 199857, *Modulating Control Valve Straight Run Guidelines*~~	

~~**3.10.1.4.2 Terminate Transfer to Melter**~~

~~**Requirement:** [**HOLD**] The MFV ADS pumps shall interface with the PPJ system to receive an interlock shutdown signal to stop the pumps from transferring to the HLW melters when a high pressure setpoint is reached in the melter plenum. [Sections 3.3.5.1.8, 4.4.3.3.2, PDSA – HLW Facility](M.2.1, M.2.3).~~

~~**Basis Discussion:** Terminating transfer to the melters when a high pressure setpoint is reached in the melter plenum, which prevents overpressurizing the HLW melter. This requirement and HFP ADS pump design are on "[**HOLD**]" because due to a discrepancy between the PDSA and SDS table C-2. PIER 24590-WTP-PIER-MGT-14-0626 has been issued to resolve inconsistent wording within the PDSA. [ALARA]~~

~~**Verification:** Verification is expected to be achieved through the following:~~

~~**Verif. Method**~~	~~**Verif. By**~~	~~**Plan**~~	~~**Notes/Comments**~~
~~**R**~~	~~**ENG**~~	~~Review the control logic design to verify capability to terminate transfer from MFV to the melter when a high pressure setpoint is reached in the melter.~~	~~Documented in DVR.~~
~~**T**~~	~~**SU/COM**~~	~~Demonstrate the capability to automatically terminate transfer from MFV to the melter, using the PPJ, when a high pressure setpoint is reached in the melter.~~	

3.10.1.5 Sump Level Monitoring in Black Cells

Requirement: HCP/HFP system sumps in back cells shall include level monitoring. [Section 16.4.1.3, BOD] (D.1, E.1)

Basis Discussion: Liquid level in the sumps is monitored to ensure that high liquid level or low liquid level in the sumps is detected and action is taken to prevent adverse consequences to the HCP/HFP system and the HLW facility.

Verification: Verification is expected to be achieved through the following:

Verif. Method	Verif. By	Plan	Notes/Comments
R	ENG	Review the design of HCP/HFP system sumps in black cells to verify level monitoring is provided.	Per the DWP, this monitoring may be performed by instrumentation or camera inspection.

3.10.1.6 Maintenance Control

Requirement: Maintenance control shall be available as a means of operating HFP system devices independent of the control systems from a local panel, pendant, or motor control center, where appropriate. [Section 11.12.3.6, ORD] (E.1)

Basis Discussion: Maintenance control is used in the event of control system failure or to perform operational tests as a result of equipment repair or maintenance.

Verification: Verification is expected to be achieved through the following:

Verif. Method	Verif. By	Plan	Notes/Comments
R	ENG	Review the design to verify that maintenance control is available as a means of operating HFP system devices independent of the controls system, where appropriate.	

3.10.1.7 Local Control Interlocks

Requirement: The HFP system equipment that can be operated at local control points shall be subject to independent protection interlocks. [Section 11.10, ORD] [Section 7.3.5.3, BOD] (E.1)

Basis Discussion: Local mode allows control to be taken away from the control system. Local operations are performed at the equipment site and are not subject to control system interlocks.

Verification: Verification is expected to be achieved through the following:

Verif. Method	Verif. By	Plan	Notes/Comments
R	ENG	Review the design of HFP system equipment that can be operated at local control points to verify that it is subject to independent protection interlocks.	

3.10.2 Nuclear Safety, ALARA, Environmental, and Other Regulatory Requirements

3.10.2.1 Safety Class Interlocks

~~The system design shall include the following SC interlocks:~~

- ~~Glass former feed line isolation valve (Section 4.3.15, PDSA - HLW Facility) Mechanical agitator failure (Section 4.3.8, PDSA - HLW Facility)~~
- ~~Non-safety air purge low flow (Section 4.3.8, PDSA - HLW Facility)~~
- ~~Seismic signal (Section 4.3.21, PDSA - HLW Facility)~~

3.10.2.1.1 ~~Glass Former Feed Line Isolation Valve - Safety Class Interlock~~Deleted

~~**Requirement:** [**HOLD**] The glass former feed isolation valve shall interface with the PPJ system to receive a signal to close upon any of the following conditions: [Section 4.3.15, PDSA - HLW Facility](M.2.10).~~

- ~~The MFPV mechanical agitator speed or power are outside of setpoint values~~
- ~~Glass formers are not being fed to the MFPVs and the glass former isolation valve is open~~

~~**Basis Discussion:** This closure reduces the potential for contamination to migrate into the glass former feed system. The possibility of contamination migration decreases when the glass former isolation valve is closed. Therefore, the glass former isolation valve interlocks to close if glass formers are not being fed into the MFPVs, which is monitored by a rotary valve between the screw feed auger and the glass former feed isolation valve, or when the MFPV mechanical agitator speed or power are outside of setpoint values. This requirement and design associated with the GFR isolation to HFP are on "[**HOLD**]" because the operation of a single valve for an SC interlock does not meet single failure criteria. An additional redundant means to isolate this line is required to meet single failure criteria. Additional clarification needs to be included on the monitoring of glass formers being fed into the MFPVs. [ALARA]~~

~~**Verification:** Verification is expected to be achieved through the following:~~

~~**Verif. Method**~~	~~**Verif. By**~~	~~**Plan**~~	~~**Notes/Comments**~~
~~**A**~~	~~**ENG**~~	~~Perform an analysis to determine the mechanical agitator speed and power setpoints required to isolate the glass former feed isolation valve.~~	
~~**R**~~	~~**ENG**~~	~~Review the control logic design to verify incorporation of the glass former feed line isolation valve interlock.~~	~~Documented in Safety System Requirement Specifications (SSRS)~~
~~**T**~~	~~**SU/COM**~~	~~Perform a test to verify the glass former feed line isolation valve closes in response to interlock signal.~~	

3.10.2.1.2 ~~Mechanical Agitator Failure - Safety Class Interlock~~Deleted

~~**Requirement:** [**HOLD**] The HFP vessel sparger design shall interface with the PPJ system to receive a mechanical agitator failure SC interlock signal, when the agitator speed and motor power values are outside established setpoints, which shall automatically transition the air spargers from idle purge to emergency sparge mode. [Sections 4.3.8, 4.3.8.4 PDSA - HLW Facility](M.2.6, M.2.7).~~

~~**Basis Discussion:** The HFP spargers are relied upon to provide sufficient agitation to mix the waste in the event that the mechanical agitator is unavailable. If the mechanical agitator speed or power values are outside established setpoints, then the PPJ system automatically activates the emergency spargers in the HFP vessels. Emergency sparge mode reduces the potential for a hydrogen explosion in HFP vessels by mixing the waste upon failure of an agitator. The safety basis requires this to be an automated function controlled by the PPJ system. This requirement and HFP vessel sparge tube design are on "[**HOLD**]" due to the differences between the SDS and the PDSA - HLW Facility and the resolution is expected to eliminate sparging. The PDSA references utilization of a sparge tube design to for hydrogen mitigation while the SDS offers multiple hydrogen mitigation options; not including air sparging.~~

~~**Verification:** Verification is expected to be achieved through the following:~~

~~**Verif. Method**~~	~~**Verif. By**~~	~~**Plan**~~	~~**Notes/Comments**~~
~~**A**~~	~~**ENG**~~	~~Perform an analysis to determine the mechanical agitator speed and power setpoints required to transition the air spargers to emergency sparge mode.~~	
~~**R**~~	~~**ENG**~~	~~Review the control logic design to verify interface between the mechanical agitator speed and power sensors and the PPJ system to control the hydrogen mitigation system modes of operation.~~	~~Document in SSRS~~
~~**T**~~	~~**SU/COM**~~	~~Test the PPJ system to verify the emergency sparger mode is initiated when the mechanical agitator is unavailable (i.e., speed or power outside setpoints).~~	

3.10.2.1.3 ~~Purge Air Low Flow – Safety Class Interlock~~Deleted

~~**Requirement:** [**HOLD**] The system design shall interface with the PPJ system to receive a non-safety air purge low flow SC interlock signal, if the air purge flow rate is below the normal flow setpoint, which will automatically transition the safety air control valves from non-safety to safety air supply to the HFP vessel spargers. [Sections 4.3.8, 4.3.8.4 PDSA – HLW Facility] (M.2.5, M.2.8)~~

~~**Basis Discussion:** The safety basis requires this to be an automated function controlled by the PPJ system. This requirement and HFP vessel sparge tube design are on "[**HOLD**]" due to the differences between the SDS and the PDSA – HLW Facility and the resolution is expected to eliminate sparging. The PDSA references utilization of a sparge tube design to for hydrogen mitigation while the SDS offers multiple hydrogen mitigation options; not including air sparging.~~

~~**Verification:** Verification is expected to be achieved through the following:~~

~~**Verif. Method**~~	~~**Verif. By**~~	~~**Plan**~~	~~**Notes/Comments**~~
~~**A**~~	~~**ENG**~~	~~Perform an analysis to determine the low normal flow setpoint which transitions the safety air control valves to the safety air supply.~~	
~~**R**~~	~~**ENG**~~	~~Review the control logic design to verify interface between the mechanical agitator speed and power sensors and the PPJ to control the safety air control valves.~~	~~Document in SSRS~~
~~**T**~~	~~**SU/COM**~~	~~Perform a test the PPJ system to verify the ISA safety air control valves switch from non-safety purge ISA to safety ISA supply to the spargers when the flow rate drops below the setpoint.~~	

3.10.2.1.4 ~~Seismic Signal – Safety Class Interlock~~Deleted

~~**Requirement: [HOLD]** The system design shall interface with the PPJ system to receive seismic signal SC interlock signal, which shall automatically activate the air amplifiers on each HFP vessel in response to a seismic event. [Sections 4.3.7.2.2, 4.3.21, PDSA – HLW Facility](M.2.11).~~

~~**Basis Discussion:** The seismic signal interlocks mitigate post-seismic event consequences by performing required actions to achieve a safer facility state. Administrative controls will direct assessing the seismic~~

~~monitoring or other alternate means and determine whether the manual activation of the seismic signal is required. Following a determined seismic action level, and per emergency response procedures, the operator activates the seismic signal. The manual activation will prompt the PPJ automatic control system and other interlocks to complete the required activation and isolation actions. This requirement and design associated with seismic activation of the air amplifiers are on "[**HOLD**]" due to a note in PDSA Section 4.3.21 which states: "The design of the seismic switch feature is being evaluated. An update to this section will be provided after completion of a new hazards analysis." The hold will be removed once the PDSA is updated and associated DUIs are incorporated. [ALARA]~~

~~**Verification:** Verification is expected to be achieved through the following:~~

~~**Verif. Method**~~	~~**Verif. By**~~	~~**Plan**~~	~~**Notes/Comments**~~
~~**R**~~	~~**ENG**~~	~~Review the control logic design to verify activation of the air amplifiers upon initiation of the seismic signal interlock.~~	~~Documented in DVR.~~
~~**T**~~	~~**SU/COM**~~	~~Demonstrate the HFP vessel air amplifiers are activated in response to a seismic signal interlock signal.~~	

3.10.2.1.5 Seismic Signal Interlock – Melter Feed Isolation

Requirement: The HFP system shall isolate the melter feed within 2 minutes of detecting a greater than or equal to SC-IV seismic event. [Section 4.3.1.1.4, Appendix M, HLW PDSA] (E.2)

Basis Discussion: Terminating the feed of HLW slurry to the melters limits the duration of hazardous melter offgas generation, and limits the load in the C5V fans maintaining confinement via cascading air flow. A two-minute maximum response time conservatively enables response of the equipment to minimize the risk of melter offgas emissions outside of the C5 confinement boundary. [ALARA]

Verification: Verification is expected to be achieved through the following:

Verif. Method	**Verif. By**	**Plan**	**Notes/Comments**
R	**ENG**	Review the design to verify that the melter feed is isolated within 2 minutes of detecting a greater than or equal to SC-IV seismic event.	
T	**SU/ COM**	Perform a test to verify that the melter feed is isolated within 2 minutes of detecting a greater than or equal to SC-IV seismic event.	

3.10.2.2 Safety Significant Interlocks

~~The system design shall include the following SS interlocks:~~

- ~~HFP-VSL-00001/HFP-VSL-00005 high-high liquid level feed diversion valve (Section 4.4.4, PDSA HLW Facility)~~
- ~~Glass former feed line isolation interlocks and purge air (Section 4.4.23, PDSA HLW Facility)~~
- ~~Terminate Transfer to Autosampling System (Section 4.4.19.1, PDSA HLW Facility)~~
- ~~Autosampling System Valve Position to Isolate Flush Connection (Section 4.4.19.1, PDSA HLW Facility)~~

3.10.2.2.1 ~~MFPV Feed Diversion Valve – High-High Liquid Level Safety Significant Interlock~~HFP Vessel High Level Interlock

Requirement: Upon the detection of a high vessel liquid level, the HFP vessel high level interlock shall terminate the process stream feed, glass former, and water addition into the HFP system vessel by isolating the valves within adequate time to maintain the vessel level below the overflow feature. [Sections 4.4.2.4.3, 4.4.2.4.4, Appendix M, HLW PDSA] (E.2) ~~[**HOLD**] The MFPV feed diversion valve shall interface with the PPJ system to receive a high-high liquid level interlock signal, if the MFPV content levels exceed setpoint values, which shall close the valve to stop the waste transfer to the MFPV and shutdown the HLP transfer pumps. [Sections 4.4.4, 5.5.9, PDSA – HLW Facility][Section 14.10.1.1, BOD] (M.2.1, M.2.9).~~

Basis Discussion: The HFP system vessel level detection provides a means to maintain the amount of waste solution consistent with 24590-HLW-U4C-U78T-00001, *Unmitigated Dose Consequences from a Liquid Spill at HLW*. ~~If MFPV content levels exceed setpoint values, the PPJ then closes the feed diversion valve to prevent the MFPVs from being overfilled with HLW concentrate. This requirement and design of the feed diversion interlock are on "[**HOLD**]" due to differences between the SDS and the PDSA – HLW Facility. The PDSA Section 4.4.4 currently states that the MFPV feed diversion valve interlock is designed to close the valve to prevent overfilling the MFPVs and divert the waste back to the PT Facility. The SDS specifies isolation of transfers into the HFP vessels which could alternatively be achieved by isolation of the ADS pumps and GFR system. [ALARA]~~

Verification: Verification is expected to be achieved through the following:

Verif. Method	Verif. By	Plan	Notes/Comments
A	**ENG**	Perform an analysis to ~~determine~~ verify the ~~MFPV~~ high ~~high~~ level setpoints which initiate interlock signals to isolate the valves within adequate time to maintain the vessel level below the overflow feature~~shutdown the HLP pumps~~.	
R	**ENG**	Review the ~~control logic~~ design to verify ~~incorporation of the high-high liquid level feed diversion valve interlock~~the process stream feed, glass former, and water addition into the HFP system vessel are isolated at the setpoint determined in the analysis.	~~Document in SSRS~~
T	**SU/ COM**	Perform a test to verify that upon the detection of high liquid level signal, the vessel high-level interlock terminates process streams (waste feed, glass formers, water) by isolating the valves within adequate time of detecting to maintain the vessel level below the overflow feature~~Verify the high-high liquid level feed diversion valve interlock will shut the feed diversion valve and turn off the HLP transfer pumps when MFPV content levels exceed setpoint values~~.	

3.10.2.2.2 ~~Glass Former Feed Line Isolation Interlocks – Safety Significant Interlock~~ Deleted

~~**Requirement:** [**HOLD**] The glass former feed isolation valve shall interface with the PPJ system to receive a signal to close, if any of the following MFPV setpoint values are exceeded: [Sections 4.4.23, 4.4.23.3, PDSA – HLW Facility] (M.2.10).~~

- ~~Headspace pressure high~~
- ~~Waste level high~~
- ~~HOP pressure low~~

~~**Basis Discussion:** This interlock reduces the probability of radiological exposure to a facility worker by closing the glass former feed isolation valve upon indication of potential for loss of confinement. This requirement and associated design of the GFR isolation to the HFP system are on "[**HOLD**]" until it is determined whether the GFR isolation valve must be designed as SC or SS. [ALARA]~~

~~**Verification:** Verification is expected to be achieved through the following:~~

~~Verif. Method~~	~~Verif. By~~	~~Plan~~	~~Notes/Comments~~
~~A~~	~~ENG~~	~~Perform an analysis to determine the Headspace pressure, Waste level, and HOP pressure setpoints which initiate the glass former feed interlock.~~	
~~R~~	~~ENG~~	~~Review the control logic design to verify incorporation of the glass former feed line isolation valve interlock.~~	~~Document in SSRS~~
~~T~~	~~SU/COM~~	~~Test the glass former feed line isolation valves close in response to the interlock signal from the scenarios listed above.~~	

3.10.2.2.3 ~~Terminate Transfer to Autosampling System~~ASX Leak Detection Interlock

Requirement: Upon leak detection in the enclosure drain, the ASX leak detection interlock shall isolate the HFP recirculation pump prior to exceeding the enclosure static pressure head limit or overflowing into the C3 area. [Sections 4.4.5.1.3, 4.4.5.1.4, Appendix M, HLW PDSA] (E.2) ~~The HFP vessel sample/transfer pumps shall stop when an interlock signal from the PPJ system is received when liquid level is detected in the autosampler enclosure containment boundary. [Sections 3.3.5.1.10, 4.4.19.1, 5.5.10, PDSA - HLW Facility] [Section 14.10.1.1, BOD] (M.2.2).~~

Basis Discussion: The interlock isolates the HFP system recirculation pumps before the leaking liquid overfills the ASX system enclosure or exceeds a level that will fail the confinement due to static pressure head. ~~The system liquid level alarm detects a failure of the ASX feed or return line and trips the interlock, which is designed to stop the melter feed sample process operations to prevent flooding the autosampler enclosure. This requirement is based on ALARA considerations if ASX enclosure were to overflow and cause exposure to employees.~~

Verification: Verification is expected to be achieved through the following:

Verif. Method	Verif. By	Plan	Notes/Comments
~~A~~	~~ENG~~	~~Perform an analysis to determine the high level setpoint required to initiate an interlock signal.~~	
R	ENG	Review the ~~control logic~~ design to verify that the HFP recirculation pumps are isolated upon leak detection in the enclosure drain prior to exceeding the enclosure static pressure head limit or overflowing into the C3 area ~~ASX liquid level interlock with the HFP vessel sample/transfer pumps~~.	~~Documented in DVR.~~
T	SU/ COM	Perform a test to verify that the HFP recirculation pumps are isolated upon leak detection in the enclosure drain prior to exceeding the enclosure static pressure head limit or overflowing into the C3 area~~the HFP vessel sample/transfer pumps shutoff upon receiving a signal from the control system in response to a high liquid level setpoint interlock in the ASX sample enclosure~~.	

3.10.2.2.4 ~~Autosampling System Valve Position to Isolate Flush Connection~~Deleted

~~**Requirement:** The HFP sample/transfer pumps shall not be allowed to operate or shall terminate operation whenever the ASX three-way valves are open to the sample line flush connection position. [Sections 3.3.5.1.14, 4.4.19.2, 5.5.7, PDSA – HLW Facility] [Section 14.10.1.1, BOD] (M.1.1, M.2.1, M.2.2).~~

~~**Basis Discussion:** Without this prevention, highly contaminated sample liquid from the MFPVs or PWD vessel could backflow into the flush supply line and subsequent C2 zones. The flush connection valve is closed when the pump is in operation during transfer or sampling (refer to drawing change notices 24590-HLW-M6N-ASX-00008, *General Instrumentation Revision to HLW ASX System P&ID (ASX-SMPLR-00029)*, and 24590-HLW-M6N-ASX-00010, *General Instrumentation Revision to HLW ASX System P&ID (ASX-SMPLR-00042)*). [ALARA]~~

~~**Verification:** Verification is expected to be achieved through the following:~~

~~Verif. Method~~	~~Verif. By~~	~~Plan~~	~~Notes/Comments~~
~~R~~	~~ENG~~	~~Review of the control system design to verify interlock/permissive of ASX three-way valve position switches with the HFP vessel sample/transfer pumps.~~	~~Documented in DVR.~~
~~T~~	~~SU/COM~~	~~Perform a test to verify the HFP vessel sample/transfer pumps cannot start up when the ASX three-way valves are positioned open to the sample line flush connection.~~	
~~T~~	~~SU/COM~~	~~Perform a demonstration to verify the HFP vessel sample/transfer pumps shutdown when the ASX three-way valves are positioned open to the sample line flush connection while the HFP vessel sample/transfer pumps are in operation.~~	

3.10.2.2.5 Melter Plenum Pressure Interlock

Requirement: Upon the detection of a sustained positive melter plenum pressure relative to the melter cave, the melter plenum pressure interlock shall send a signal to close the isolation valves for the ADS pump air supply (terminating melter feed) within 3 minutes of detecting a high melter plenum pressure to maintain an analyzed cold-cap burnoff duration. [Sections 4.4.3.2.3, 4.4.3.2.4, Appendix M, HLW PDSA] (E.2)

Basis Discussion: The duration must be limited to 3 minutes to protect the basis for the minimum submerged bed scrubber (SBS) level, and to maintain a low co-located worker (CLW) chemical consequence due to mercury vapor.

Verification: Verification is expected to be achieved through the following:

Verif. Method	Verif. By	Plan	Notes/Comments
R	ENG	Review the design to verify that the isolation valves for the ADS pump air supply close within 3 minutes of detecting a high melter plenum pressure.	
T	SU/ COM	Perform a test to verify that the isolation valves for the ADS pump air supply close within 3 minutes of detecting a high melter plenum pressure.	

3.10.2.2.6 SBS Low-Level Interlock

Requirement: Upon the detection of a low SBS liquid level, the SBS low-level interlock shall activate isolation valves on the air to the ADS melter feed pumps within sufficient time to maintain the required SBS level for protection of HOP HEPA filters and carbon adsorber vessel. [Sections 4.4.4.1.3, 4.4.4.1.4, Appendix M, HLW PDSA] (E.2)

Basis Discussion: To provide its safety function, the SBS low-level interlock terminates all potential syphons from the SBS and stops feed to the melters.

Verification: Verification is expected to be achieved through the following:

Verif. Method	Verif. By	Plan	Notes/Comments
R	ENG	Review the design to verify that the isolation valves on the air to the ADS melter feed pumps are activated upon the detection of a low SBS liquid level within sufficient time to maintain the required SBS level for protection of HOP HEPA filters and the carbon bed adsorber vessel.	
T	SU/ COM	Perform a test to verify that the isolation valves on the air to the ADS melter feed pumps are activated upon the detection of a low SBS liquid level within sufficient time to maintain the required SBS level for protection of HOP HEPA filters and the carbon bed adsorber vessel.	

3.10.2.2.7 HOP HEPA Filter High Temperature Interlock

Requirement: Upon the detection of a HOP HEPA filter high inlet temperature, the HOP HEPA filter high temperature interlock shall activate isolation valves on the air to the ADS melter feed pumps to terminate melter feed. [Sections 4.4.4.5.3, 4.4.4.5.4, Appendix M, HLW PDSA] (E.2)

Basis Discussion: The HOP HEPA filter high temperature interlock provides a means to ensure the amount of melter offgas released is consistent with the consequence analyses by halting the HOP booster and extraction fans prior to reaching the failure temperature of the HOP HEPA filters and terminating melter feed.

Verification: Verification is expected to be achieved through the following:

Verif. Method	Verif. By	Plan	Notes/Comments
R	ENG	Review the design to verify that the isolation valves on the air to the ADS melter feed pumps are activated upon the detection of a HOP HEPA filter high inlet temperature.	
T	SU/ COM	Perform a test to verify that the isolation valves on the air to the ADS melter feed pumps are activated upon the detection of a HOP HEPA filter high inlet temperature.	

3.10.2.2.8 HOP HEPA Filter High dP Interlock

Requirement: Upon the detection of a high dP across the HOP HEPA filter banks, the HOP HEPA filter dP interlock shall activate isolation valves on the air to the ADS melter feed pumps to terminate melter feed. [Sections 4.4.4.6.3, 4.4.4.6.4, Appendix M, HLW PDSA] (E.2)

Basis Discussion: The period it takes the interlock to recognize the high dP, generate a trip signal, provide the signal to the PPJ system, and have the PPJ system issue commands that terminate HOP booster and extraction fans operation must be less than the period of high dP that fails the HOP HEPA filters.

Verification: Verification is expected to be achieved through the following:

Verif. Method	Verif. By	Plan	Notes/Comments
R	ENG	Review the design to verify that the isolation valves on the air to the ADS melter feed pumps are activated upon the detection of a high dP across the HOP HEPA filter banks.	
T	SU/ COM	Perform a test to verify that the isolation valves on the air to the ADS melter feed pumps are activated upon the detection of a high dP across the HOP HEPA filter banks.	

3.10.2.2.9 HOP HEPA Filter Low dP Interlock

Requirement: Upon the detection of a low dP across the HOP HEPA filter banks, the HOP HEPA filter dP interlock shall activate isolation valves on the air to the ADS melter feed pumps to terminate melter feed. [Sections 4.4.4.6.3, 4.4.4.6.4, Appendix M, HLW PDSA] (E.2)

Basis Discussion: Although low dP concerns are generally addressed by SSC integrity and technical safety requirement (TSR) responses, the actions taken by the interlock provide assurance that, should a filter blowout or bypass occur, any offgas releases which occur are directed to an area ventilated by the C5V system which has provisions for the filtration and elevation of the release to provide protection for affected receptors.

Verification: Verification is expected to be achieved through the following:

Verif. Method	Verif. By	Plan	Notes/Comments
R	ENG	Review the design to verify that the isolation valves on the air to the ADS melter feed pumps are activated upon the detection of a low dP across the HOP HEPA filter banks.	
T	SU/ COM	Perform a test to verify that the isolation valves on the air to the ADS melter feed pumps are activated upon the detection of a low dP across the HOP HEPA filter banks.	

3.10.2.2.10 HOP Secondary Offgas Loss of Vacuum Interlock

Requirement: Upon the detection of a loss of vacuum dP between the booster and stack extraction fans, the HOP secondary offgas loss of vacuum interlock shall close isolation valves for the ADS pump air supply (terminating melter feed) in sufficient time to maintain an analyzed cold-cap burnoff duration. [Sections 4.4.4.7.3, 4.4.4.7.4, Appendix M, HLW PDSA] (E.2)

Basis Discussion: To provide additional control set reliability and avoid challenging the melter plenum pressure interlock to isolate melter feed, the loss of vacuum system is also interlocked to the ADS pump air supply.

Verification: Verification is expected to be achieved through the following:

Verif. Method	Verif. By	Plan	Notes/Comments
R	ENG	Review the design to verify that the isolation valves for the ADS air supply are closed upon the detection of a loss of vacuum dP between the booster and stack extraction fans in sufficient time to maintain an analyzed cold-cap burnoff duration.	
T	SU/ COM	Perform a test to verify that the isolation valves for the ADS air supply are closed upon the detection of a loss of vacuum dP between the booster and stack extraction fans in sufficient time to maintain an analyzed cold-cap burnoff duration.	

3.10.2.2.11 C5V HEPA Filter High dP Interlock

Requirement: Upon the detection of a high C5V HEPA filter dP, the C5V HEPA filter high dP interlock shall send a signal to terminate waste feed transfers between HFP vessels, in the ASX sample loop, and to the melter by isolating power to the HFP system transfer pumps and by closing air valves to the ADS pumps. [Sections 4.4.6.3.3, 4.4.6.3.4, Appendix M, HLW PDSA] (E.2)

Basis Discussion: The C5V HEPA filter high dP system is designed to automatically initiate the operation of systems to ensure design limits are not exceeded as a result of anticipated operational occurrences and to detect potential accident conditions and initiate the operation of safety systems and components. [ALARA]

Verification: Verification is expected to be achieved through the following:

Verif. Method	Verif. By	Plan	Notes/Comments
R	ENG	Review the design to verify that the power to the HFP system transfer pumps is isolated and the air valves to the ADS pumps are closed upon the detection of a high C5V HEPA filter dP.	
T	SU/ COM	Perform test to verify that the power to the HFP system transfer pumps is isolated and the air valves to the ADS pumps are closed upon the detection of a high C5V HEPA filter dP.	

3.10.2.2.12 Seismic Signal Interlock – Centrifugal Transfer Pumps

Requirement: The HFP system centrifugal transfer pumps shall be electrically isolated within 5 minutes of detecting a greater than or equal to SC-IV seismic event. [Section 4.3.1.1.4, Appendix M, HLW PDSA] (E.2)

Basis Discussion: A five-minute maximum response time is considered reasonably conservative to enable response of the equipment in providing accident analysis margin, and minimizing the risk of hazardous material sprays. [ALARA]

Verification: Verification is expected to be achieved through the following:

Verif. Method	Verif. By	Plan	Notes/Comments
R	ENG	Review the design to verify that the HFP system centrifugal transfer pumps are electrically isolated within 5 minutes of detecting a greater than or equal to SC-IV seismic event.	
T	SU/ COM	Perform a test to verify that the HFP system centrifugal transfer pumps are electrically isolated within 5 minutes of detecting a greater than or equal to SC-IV seismic event.	

3.10.2.2.13 Seismic Signal Interlock – C5 Confinement Boundary Valves

Requirement: C5 confinement boundary valves in the HFP system shall be isolated on piping penetrations equal to or exceeding 4 inches (nominal outer diameter) within 2 minutes of detecting a greater than or equal to SC-IV seismic event. [Section 4.3.1.1.4, Appendix M, HLW PDSA] (E.2)

Basis Discussion: A two-minute maximum response time is considered reasonably conservative to enable response of the equipment in providing accident analysis margin, and minimizing the risk of melter offgas emissions outside of the C5 confinement boundary. Among those requiring closure are the 8-inch diameter GFR feed lines connecting the GFR mixers and HFP vessels. [ALARA]

Verification: Verification is expected to be achieved through the following:

Verif. Method	Verif. By	Plan	Notes/Comments
R	ENG	Review the design to verify that the C5 confinement boundary valves in the HFP system are isolated on piping penetrations equal to or exceeding 4 inches (nominal outer diameter) within 2 minutes of detecting a greater than or equal to SC-IV seismic event.	
T	SU/ COM	Perform a test to verify that the C5 confinement boundary valves in the HFP system are isolated on piping penetrations equal to or exceeding 4 inches (nominal outer diameter) within 2 minutes of detecting a greater than or equal to SC-IV seismic event.	

3.10.2.3 Implementation of Active Safety Instrumented Functions

Requirement: The active safety instrumented functions for the HFP and HCP system shall be designed in accordance with the safety criterion 4.3-1, 4.3-3, 4.3-4, 4.3-6, 4.4-1 and 4.4-2 of the SRD. [Safety Criterion, 4.3-1, 4.3-3, 4.3-4, 4.3-6, 4.4-1, ~~and~~ 4.4-2, SRD] ~~(M.2)~~

Basis Discussion: The SRD establishes the criterion and applicable standards for the safety design. The design processes including 24590-WTP-GPG-J-015, *Safety Instrumented System Implementation* and the electrical design criteria are used to ensure independence and design compliance with the mandated standards. The completed designs are documented in Safety Systems Requirements Specification and other design documents, which are required to be verified to ensure compliance with the standards.

Verification: Verification is expected to be achieved through the following:

Verif. Method	Verif. By	Plan	Notes/Comments
R	**ENG**	~~Verify the Safety Systems Requirements Specifications and designs are~~Review the design to verify active safety instrumented functions in the HFP and HCP system are designed in accordance with the criteria and standards in Safety Criteria 4.3-1, 4.3-3, 4.3-4, 4.3-6, 4.4-1 and 4.4-2 of 24590-WTP-SRD-ESH-01-001-02, *Safety Requirements Document Volume II*.	~~Documented in DVR.~~

3.10.2.4 Final Element Actuation

Requirement: HFP system interlock final elements shall be designed to drive closed if motive power is available and to fail closed for any interruption of control signal motive; if failed closed cannot be achieved by design, the final elements shall utilize credited safety air supplies or electric power as needed to ensure closure on demand. [Sections 4.3.1.1.4, 4.4.2.4.4, 4.4.3.2.4, 4.4.4.1.4, 4.4.4.5.4, 4.4.4.6.4, 4.4.4.7.4, 4.4.6.3.4, Appendix M, HLW PDSA]

Basis Discussion: The final elements ensure that the safety function is performed. This includes the seismic signal interlocks, the HFP vessel high-level interlock, the melter plenum pressure interlock, the SBS low-level interlock, the HOP HEPA filter high temperature interlock, the HOP HEPA filter high dP interlock, the HOP HEPA filter low dP interlock, the HOP secondary offgas loss of vacuum interlock, and the C5V HEPA filter high dP interlock.

Verification: Verification is expected to be achieved through the following:

Verif. Method	Verif. By	Plan	Notes/Comments
R	**ENG**	Review the design to verify that the HFP system interlock final elements are designed to drive closed if motive power is available and to fail closed for any interruption of control signal motive; if failed closed cannot be achieved by design, the final elements shall utilize credited safety air supplies or electric power as needed to ensure closure on demand.	
T	**SU/ COM**	Perform a test to verify that the HFP system interlock final elements drive closed if motive power is available and to fail closed for any interruption of control signal motive.	

3.10.2.5 ~~Additional Safety Instrumentation: Single Failure Criteria / Safety Class Requirements~~ Deleted

~~**Requirement:** The HFP and HCP system, SC safety instrumented functions shall be designed in accordance with safety criterion 4.3-2 and 4.3-5 of 24590-WTP-SRD-ESH-01-001-02, Safety Requirements Document Volume II. [Safety Criterion, 4.3-2 and 4.3-5, SRD] (M.2)~~

~~**Basis:** For safety instrumented functions to meet the single failure criterion, additional work related to fire zone separation and a detailed single failure analysis following the guidance in 24590-WTP-GPG-ENG-0159, *Single Failure Analysis Process for Mechanical, HVAC and Control Systems*, is required. The completed designs are documented in Safety Systems Requirements Specification and other design documents, which are required to be verified to ensure compliance with standards.~~

~~**Verification:** Verification is expected to be achieved through:~~

~~Verif. Method~~	~~Verif. By~~	~~Plan~~	~~Notes/Comments~~
~~R~~	~~ENG~~	~~Verify the Safety Systems Requirements Specifications and designs are in accordance with the criterion and standards in safety criterion 4.3-2 and 4.3-5 of 24590-WTP-SRD-ESH-01-001-02, Safety Requirements Document Volume II.~~	~~Documented in DVR.~~

3.10.2.6 Sump Leak Detection

Requirement: The HCP/HFP system sumps in areas regulated as tank system or ancillary equipment secondary containment shall provide a leak detection system capable of detecting a leak of at least 0.1 gallons per hour within 24 hours, due to the failure of the primary containment, the presence of any release of dangerous waste, or accumulated liquid in the secondary containment system. [Sections 11.3.5.2, 14.10.1.2, 14.10.1.3, BOD] [Section III.10.E.9, DWP WA7890008967] (D.1, E.1)

Basis Discussion: The HCP/HFP system provides leak detection capability to detect the presence of any release of mixed or dangerous waste, or accumulated liquid in the secondary containment system, to indicate the need for transfer until collected material is removed. [ALARA]

Verification: Verification is expected to be achieved through the following:

Verif. Method	Verif. By	Plan	Notes/Comments
R	ENG	Review the design to verify that HCP/HFP system sumps in areas regulated as tank system or ancillary equipment secondary containment provide a leak detection system capable of detecting a leak of at least 0.1 gallons per hour within 24 hours.	
T	SU/ COM	Verify the leak detection capability for sumps (discharging to the HFP system vessels) as described in the WTP Dangerous Waste Permit.	

3.10.2.7 Vessel Overfill Prevention Controls

Requirement: The HCP/HFP system vessels regulated as tank systems shall include overflow prevention controls (WAC 173-303-640[5][b][ii]). [Section 14.10.1.1, BOD] (E.1)

Basis Discussion: Tank systems in the HLW Facility are subject to the requirements of the Washington Administrative Code. Examples of overflow prevention controls include level sensing devices, high-level alarms, automatic feed cutoff, pressure-sensing devices, or a bypass to a standby tank. [ALARA]

Verification: Verification is expected to be achieved through the following:

Verif. Method	Verif. By	Plan	Notes/Comments
R	ENG	Review the design of the HCP/HFP system vessels regulated as tank systems to verify the inclusion of overflow prevention controls.	

3.10.3 System Interface Requirements

3.10.3.1 Active Safety Instrumentation, Programmable Protection System

Requirement: HFP system instrumented SSCs classified as Safety Class or Safety Significant shall be controlled by the PPJ system and shall be independent from the integrated control network (ICN).~~The HFP and HCP Instruments with active safety functions are required to interface with the PPJ or be engineered as local safety instrumented functions. Signal interfaces shall use standard 4-20 mA or digital contacts. Appendix C provides a list of the HFP and HCP active safety instrumented functions and implementing components for the HSH system.~~ [Sections 7.1, 9.10, BOD] ~~(M.2)~~(E.2)

Basis Discussion: Safety related SSCs are controlled independently of the non-safety control system to ensure that safety control functions are not impaired by the failure of the non-safety control system~~Active safety instrumentation is implemented independently to the normal control system (PCJ/ MHJ) through the PPJ system or in local logic solvers. The PPJ is the main safety system logic solver used on WTP and includes logic programming to implement the active safety controls~~.

Verification: Verification is expected to be achieved through the following:

Verif. Method	Verif. By	Plan	Notes/Comments
R	**ENG**	Review the design of the HFP system SS SSCs to verify they are controlled by the PPJ system and independent from ICN~~Verify required interface included in specifications and material requisitions (MRs) used to procure active safety instruments~~.	

3.10.3.2 Process Control System - Instruments

Requirement: HFP system instrumentation shall be selected to support interfaces to the PCJ system based on Digital Bus technology. Where such digital interfaces are not readily commercially available, or not appropriate, hard-wired interfaces (4-20 mA) shall be used~~Instruments connected to the PCJ system shall not perform any credited active safety function. Instruments connected to the PCJ may include and perform safety boundary or retention functions. HFP instruments shall use standard commercially available instrumentation and communication protocols to interconnect to the PCJ system. Fieldbus or Modbus communication may be used~~. [Sections 9.4.1, 9.5.3.1, BOD] (E.1)~~(M.1).~~

Basis Discussion: The PCJ system is used as the normal process control system. The PCJ system allows remote operator control and monitoring of the HFP system processes (e.g., provisions for process level, temperature, pressure, cooling, and mixing, along with the ability to control and monitor pumps, motors, and valves to operate the HFP system~~s~~). Examples of Digital Bus technology include Foundation Fieldbus ISA 50.02, Profibus DP, and Modbus RTU over TIA/EIA 485.~~Alarms and warnings are provided to bring operator attention to, and allow rectification of abnormal process situations.~~

~~The instruments are part of the HFP. The system logic and control software is part of the HFP, but resides and is implemented by the PCJ. The software interfaces with software and hardware on other systems to collectively form an integrated control system for WTP.~~

Verification: Verification is expected to be achieved through the following:

Verif. Method	Verif. By	Plan	Notes/Comments
R	**ENG**	Review the design to verify that HFP system instrumentation is designed to support interfaces to the PCJ system based on Digital Bus technology~~Verify required specifications (related to PCJ interface) are included in MRs used to procure instruments~~.	~~May be documented in an assessment/evaluation.~~

3.10.4 Other Technical, Specialty, Operations and Maintenance Requirements

3.10.4.1 Process Control System - Remote Control Operations

Requirement: Remote operation of HFP system valves shall be provided where accessibility is difficult, and for valves used in routine operations. ~~The HFP design shall include the following capabilities that are remotely controlled or monitored by the PCJ system: [Sections 9.4.2, 11.4.1, 11.8.3.1, BOD]~~[Section 14.4, ORD]~~(M.1.1, M.1.2, M.2.1).~~ (E.1)

~~**Melter Feed Preparation Vessels:**~~

- ~~The design shall have the capability to remotely monitor the vessel headspace pressure, liquid level, and contents temperature using the PCJ.~~

~~**Melter Feed Vessels:**~~

- ~~The design shall have the capability to remotely monitor the vessel headspace pressure, liquid level, and contents temperature using the PCJ.~~

~~**Mechanical Agitators (Motor and Impeller):**~~

- ~~The design shall have the capability to remotely start and terminate operation using the PCJ (interlocks are provided via the PPJ).~~
- ~~The design shall have the capability to transmit the operating shaft rotation speed and motor power to the PCJ.~~

~~**Pumps (Sample/Transfer and ADS):**~~

- ~~The design shall have the capability to remotely start and terminate operation using the PCJ (interlocks are provided via the PPJ).~~
- ~~The design shall have the capability to transmit the sampling transfer rate to the PCJ.~~
- ~~The design shall include remote automatic sampling capability.~~

~~**Spargers [HOLD]:**~~

- ~~The design shall have the capability to remotely start and terminate operation using the PCJ (interlocks are provided via the PPJ).~~
- ~~The design shall have the capability to transmit the sparger airflow rate to the PCJ.~~

~~**Monitoring Instruments:**~~

- ~~The design shall have the capability to communicate with the PCJ.~~
- ~~The design shall provide the capability to access instruments to calibrate in-place or remove to calibrate in the maintenance area.~~

~~**Remote Operated Valves:**~~

- ~~The design shall have the capability to remotely open or close using the PCJ (interlocks are provided via the PPJ).~~
- ~~The design shall have the capability to transmit the operating position to the PCJ.~~

Basis Discussion: Remote operation is used to ensure that the design achieves occupational doses that are ALARA. ~~Only the spargers are on "[**HOLD**]" due to the differences between the SDS and the PDSA - HLW Facility and the resolution is expected to eliminate sparging. The PDSA references utilization of a sparge tube design to for hydrogen mitigation while the SDS offers multiple hydrogen mitigation options; not including air sparging. These features are ALARA because they allow remote monitoring and positioning.~~ [ALARA]

Verification: Verification is expected to be achieved through the following:

Verif. Method	Verif. By	Plan	Notes/Comments
R	**ENG**	Review the design of the HFP system to verify that remote operation is provided for valves installed in areas where accessibility is difficult and for valves used in routine operations~~Review of design to verify control room remote monitoring and control features~~.	~~May be documented in an assessment/evaluation.~~
~~**T**~~	~~**SU/ COM**~~	~~Demonstrate the PCJ remote control operations for all the listed HFP equipment/components on both melter lines.~~	

3.10.4.2 ~~Programmable Protection System - Remote Control Operations~~Deleted

~~**Requirement:** All PPJ monitoring and control functions shall be forwarded to the PCJ system for operator interface. [Section 7.3.7.4, 9.10, BOD](M.2.1, M.2.2, M.2.3, M.2.4, M.2.5, M.2.6, M.2.7, M.2.8, M.2.9, M.2.10, M.2.11).~~

~~**Basis Discussion:** The PPJ functions (i.e., interlocks) are covered elsewhere in the document. Design guide 24590-WTP-GPG-J-015, *Safety Instrumented System Implementation*, provides the implementing instructions for this requirement. Remote operations are considered ALARA features.~~

~~[ALARA]~~

~~**Verification:** Verification is expected to be achieved through the following:~~

~~Verif. Method~~	~~Verif. By~~	~~Plan~~	~~Notes/Comments~~
~~**R**~~	~~**ENG**~~	~~Review of design to verify that all PPJ monitoring and control functions are forwarded to the PCJ.~~	~~Documented in logic diagrams and SSRS.~~
~~**T**~~	~~**SU/COM**~~	~~Demonstrate all PPJ monitoring and control functions are forwarded to the PCJ.~~	~~Recommended to be performed in conjunction with individual PPJ requirements.~~

3.10.4.3 Accessibility for Calibration, Testing, and Inspection

Requirement: The HFP system design shall provide the capability to access and perform remote (in cave) or direct (out cave) calibration, maintenance, periodic functional testing, and inspections of equipment and components during normal operation~~ in areas that are ALARA~~. [Sections 6.7, 8.1.2, 9.12, ~~11.3.2.2, 11.5.1, 12.6.3,~~ BOD] [Sections 9.1, 11.16, ORD] ~~[Section III.10.C.5.e.iii., Dangerous Waste Portion of RCRA Permit].~~

Basis Discussion: Personnel exposure while performing calibration, testing, or inspection should be ALARA. ~~Instruments requiring hands on preventive maintenance activities such as calibrations, functional testing or replacement should be incorporated into the system design so that online maintenance may be performed. Temperature elements installed in thermowells should allow removal without interrupting the process.~~

~~Instrumentation required on contaminated process is preferable to located on remotely maintainable jumpers.~~ [ALARA]

Verification: Verification is expected to be achieved through the following:

Verif. Method	Verif. By	Plan	Notes/Comments
R	**ENG**	Review the design to verify the capability for remote and direct calibration, periodic functional testing, and inspections of equipment and components during normal operation~~configuration facilitates replacement and removal, or remote/direct calibration and maintenance, of equipment in areas that are ALARA~~.	~~Document in an evaluation/assessment. Plant Engineering to participate in and / or review the evaluation/assessment.~~

3.10.4.4 ~~Automatic Flushing Controls~~Deleted

~~**Requirement:** [**HOLD**] Automatic flushing controls shall be provided for MFPV to MFV transfer and post-sampling of the HFP system, and on termination of transfer from MFV to melter and shall interface with the controls for the DIW, PWD, and ASX systems. [Section 20.0, ORD] [Section 6.2.1, BOD] (E.1, 3.10.4.4).~~

~~**Basis Discussion:** Automatic flushing controls of the sample and transfer lines will help to remove waste and prevent plugging (refer to Section 4.1.4 of 24590-HLW-TB-ENG-13-0002, *Engineering Design Decision for HLW HFP* and Section 4.10.3 of 24590-HLW-ES-ENG-13-003, *Risk Reduction Study for the High Level Waste (HLW) Facility: Failure Modes, Effects, and Criticality Analysis (FMECA), In-Service Inspection (ISI), and Plugging*). This requirement and design of HCP/HCP automatic flushing controls are on "[**HOLD**]" because this change has not yet been documented in the safety basis or in the change control process. An automatic flush connection and interlocked valving for the MFV and MFPV transfer pumps will direct flushing after sample/transfer activities have been completed. The PDSA currently only directs interlocking of flush valving and sampling pumps such that flushing and sample/transfers of waste do not occur at the same time. Automatic flushing requirements in the PT to HLW transfer line will also be addressed in a later PDSA update. [ALARA]~~

~~**Verification:** Verification is expected to be achieved through the following:~~

~~Verif. Method~~	~~Verif. By~~	~~Plan~~	~~Notes/Comments~~
~~**R**~~	~~**ENG**~~	~~Review the control logic to verify automatic flushing controls and interfaces with the DIW, PWD and ASX systems~~	
~~**T**~~	~~**SU/COM**~~	~~Test automatic flushing operations post-transfer and post-sampling for each transfer/sample line.~~	

3.10.4.5 ~~Closed Circuit Television~~Deleted

~~**Requirement:** The capability to perform regulatory inspections of cell/cave floors, piping, and tanks shall be designed and included in the layout. Non-accessible cells and caves shall be provided with CCTV inspection ports at strategic points. [Section 12.4, ORD].~~

~~**Basis Discussion:** Cameras are generally located above sumps and near vulnerable items of equipment which have an elevated need for monitoring.~~

~~[ALARA]~~

~~**Verification:** Verification is expected to be achieved through the following:~~

~~Verif. Method~~	~~Verif. By~~	~~Plan~~	~~Notes/Comments~~
~~R~~	~~ENG~~	~~Review design to verify CCTV inspection ports are incorporated which allow inspection of cell/cave floors, piping, and tanks.~~	

3.10.4.6 Instrumentation Location

Requirement: HFP system instrumentation and detectors that require maintenance shall be located outside the C3 contaminated areas, where possible. However, transducer panels housing liquid level systems and associated I/O, and pressure transducers, shall be located in C3 classified areas as a precaution against back-contamination. [Section 11.16, ORD] [Section 9.4.2, BOD]

Basis Discussion: Locating instrumentation panels in C2 or lower classified areas increases the components operating life and reduces operator exposure to highly contaminated areas. In general, instrumentation is located outside of R5/C5 areas. However, for instrumentation required on contaminated processes, it is preferable to locate that instrumentation on remotely maintainable jumpers. [ALARA]

Verification: Verification is expected to be achieved through the following:

Verif. Method	Verif. By	Plan	Notes/Comments
R	ENG	Review the design to ensure that instrumentation (with the exception of transducer panels housing liquid and associated I/O, and pressure transducer) is located in C2 or lower classified areas.	

3.10.4.7 System Control Location

Requirement: In-plant HFP system controls shall be easily accessible (radiological zone) and shall not require double staffing. [Section 11.16, ORD]

Basis Discussion: Control equipment is located close to readouts that monitor change of state so that two operators are not required for routine tasks.

Verification: Verification is expected to be achieved through the following:

Verif. Method	Verif. By	Plan	Notes/Comments
R	ENG	Review the design to verify HFP system controls are easily accessible and do not require double staffing.	

3.10.4.8 Volume Balances

Requirement: The HCP/HFP system shall include the capability to determine volume balances during transfers. [Section 7.1, ORD]

Basis Discussion: Instrumentation is used to determine and monitor the volume of effluent and waste transferred throughout the HCP/HFP system.

Verification: Verification is expected to be achieved through the following:

Verif. Method	Verif. By	Plan	Notes/Comments
R	ENG	Review the design of the HCP/HFP system to verify the capability to determine volume balances during transfers is included.	

3.10.4.9 Indicator Positioning

Requirement: HFP system instrument indicators shall be positioned to give a clear line-of-sight and safe accessibility. [Section 11.16, ORD]

Basis Discussion: Instrumentation is located to minimize personnel exposures during maintenance, calibration, and replacement. [ALARA]

Verification: Verification is expected to be achieved through the following:

Verif. Method	Verif. By	Plan	Notes/Comments
R	ENG	Review the design to verify HFP system indicators are positioned to give a clear line-of-sight and safe accessibility.	

3.10.4.10 Thermowells

Requirement: HFP system temperature elements shall be installed in thermowells. [Section 11.16, ORD]

Basis Discussion: Installing temperature elements in thermowells allows for instrument removal without interrupting the process.

Verification: Verification is expected to be achieved through the following:

Verif. Method	Verif. By	Plan	Notes/Comments
R	ENG	Review the design to verify that HFP system temperature elements are installed in thermowells.	

3.10.4.11 Flowmeter Bypass Piping

Requirement: HFP system flowmeters shall be provided with bypass piping where flow interruption is not acceptable. [Section 11.16, ORD]

Basis Discussion: This configuration allows the flow element to be isolated and repaired/replaced online without interrupting the process.

Verification: Verification is expected to be achieved through the following:

Verif. Method	Verif. By	Plan	Notes/Comments
R	ENG	Review the design to verify that HFP system flowmeters are provided with bypass piping where flow interruption is not acceptable	

3.10.4.12 Transmitter Location

Requirement: HFP system transmitters shall be located on racks to the extent practicable. Transmitter and instrument racks shall be located in a suitable area with appropriate access for maintenance. If a transmitter is required to operate in a radiation environment, a radiation tolerant transmitter or remote sensing electronic unit shall be used. [Section 9.5.6, BOD]

Basis Discussion: Installing transmitters on racks minimizes field construction costs and facilitates commissioning and maintenance.

Verification: Verification is expected to be achieved through the following:

Verif. Method	Verif. By	Plan	Notes/Comments
R	ENG	Review the design to verify that HFP system transmitters are located on racks in areas with appropriate access for maintenance.	
R	ENG	Review the design of HFP system transmitters in radiation environments to verify that a radiation tolerant or remote sensing electronic unit is provided.	

3.10.4.13 Transmitter Sensing Pipes

Requirement: HFP system transmitter sensing pipe lengths shall be minimized and shall either be self-draining or equipped with drain valves. [Section 9.5.6, BOD]

Basis Discussion: Transmitter sensing pipes are designed to drain to support maintenance and replacement.

Verification: Verification is expected to be achieved through the following:

Verif. Method	Verif. By	Plan	Notes/Comments
R	ENG	Review the design to verify that HFP system transmitter sensing pipe lengths are minimize and are either self-draining or equipped with drain valves.	

3.11 ~~Other Structures, Systems, and Components Requirements~~Deleted

~~3.11.1 Mission and Functional / Performance Requirements (Including States/Modes)~~

~~3.11.1.1 Demisters~~

~~**Requirement:** Each HFP vessel shall include a demister designed with a minimum efficiency to support the operation of the HOP system. (J.1.1).~~

~~**Basis Discussion:** Demisters are located on top of the HFP vessels and connect vessel to the HOP/PVV vent line. The demisters prevent excessive moisture and aerosols from being carried into the HOP HEPA filters.~~

~~[ALARA]~~

~~**Verification:** Verification is expected to be achieved through the following:~~

~~Verif. Method~~	~~Verif. By~~	~~Plan~~	~~Notes/Comments~~
~~A~~	~~ENG~~	~~Perform an analysis to determine the demister minimum efficiency and droplet size.~~	
~~R~~	~~ENG~~	~~Review of design to verify conformance to the analysis results.~~	

~~3.11.2 Nuclear Safety, ALARA, Environmental, and Other Regulatory Requirements~~

~~3.11.2.1 Air Amplifiers~~

~~3.11.2.1.1 Maintain Negative Pressure~~

~~**Requirement:** Each HFP vessel shall include an air amplifier system designed to maintain negative pressure in the vessel headspace by discharging airflow into the melter cave, in response to seismic signal activation. [Sections 3.4.2.1.1.3, 4.3.7.2, 4.3.7.2.2, PDSA - HLW Facility] (M.2.11).~~

~~**Basis Discussion:** Each air amplifier system (includes instrumentation and controls, valves, air distribution piping, and air amplifier with flapper valve) is supplied by safety air and has a flapper valve that opens into the melter cave. The air amplifiers (air ejectors) are located on top of the HFP vessels and mitigate pressurization of the HFP vessels by discharging excess air into the C5 melter cave. The air amplifier creates a low pressure in the headspace, which draws air in the overflow line through the flapper valve and exhausts the headspace gasses into the melter cave. The air amplifiers remain off during normal operations and automatically turn on when activated by the seismic shutdown signal.[ALARA]~~

~~**Verification:** Verification is expected to be achieved through the following:~~

~~Verif. Method~~	~~Verif. By~~	~~Plan~~	~~Notes/Comments~~
~~R~~	~~ENG~~	~~Review the design to verify incorporation of an air amplifier system for each HFP vessel sized to maintain negative pressure in the vessel headspace.~~	~~Documented in DVR.~~
~~T~~	~~SU/COM~~	~~Demonstrate the air amplifier is activated by the seismic shutdown signal.~~	~~This will be performed during the verification of requirement 3.10.2.1.4~~

~~3.11.2.1.2 Operability~~

~~**Requirement:** The air amplifiers shall continuously operate upon activation under post-seismic conditions. The HFP vessel air amplifiers shall be designed to prevent its opening mechanism from fully sealing closed. [Section 4.3.7.2.2 PDSA - HLW Facility].~~

~~**Basis Discussion:** The air amplifier is to be designed to not fully close during normal operations to prevent accumulation of solids around the opening mechanism's sealing surfaces that could cause it to adhere closed to the vessel. This could result in the air amplifier failing to open under abnormal operations (loss of negative pressure).~~

~~[ALARA]~~

~~**Verification:** Verification is expected to be achieved through the following:~~

~~Verif. Method~~	~~Verif. By~~	~~Plan~~	~~Notes/Comments~~
~~R~~	~~ENG~~	~~Review of the design to verify the air amplifier opening mechanisms do not seal closed when in the closed position.~~	~~Documented in DVR.~~

~~3.11.3 System Interface Requirements~~

~~3.11.3.1 Air Amplifiers~~

~~3.11.3.1.1 Instrument Service Air - Air Supply~~

~~**Requirement: [HOLD]** The air amplifiers shall interface with the safety ISA system to receive the required flow of air to maintain negative pressure in the HFP vessels relative to the C3 zones when the facility is in seismic shutdown response mode. [Sections 3.3.5.2.12, 4.3.7.2.2, 4.3.23.2, PDSA - HLW Facility](I.3).~~

~~**Basis Discussion:** Per sheets 6, 7, and 82 of *Air Sparging Line Sizing Calculation*, 24590-HLW-M6C-HFP-00013, the air amplifiers are designed to operate by receiving 50 scfm of air at 80 psig to maintain negative pressure in the HFP vessels. The air amplifiers require safety compressed air to maintain a negative pressure in the HFP vessels during emergency sparge mode following the activation of the seismic signal. The negative pressure in the HFP vessels prevents a flow of unfiltered air from the HFP vessel headspace through a potentially broken utility/instrument line and into the C2/C3 zones. This requirement and HFP vessel sparge tube design are on "[**HOLD**]" due to the differences between the SDS and the PDSA - HLW Facility and the resolution is expected to eliminate sparging. The PDSA references utilization of a sparge tube design to for hydrogen mitigation while the SDS offers multiple hydrogen mitigation options; not including air sparging.~~

~~[ALARA]~~

~~**Verification:** Verification is expected to be achieved through the following:~~

~~Verif. Method~~	~~Verif. By~~	~~Plan~~	~~Notes/Comments~~
~~A~~	~~ENG~~	~~Perform an analysis to verify the ISA provides sufficient flow to maintain negative pressure in the vessel under post seismic conditions.~~	~~Documented in DVR.~~
~~T~~	~~SU/COM~~	~~Demonstrate the air amplifiers maintain negative pressure in the HFP vessels, relative to the C3 zones, when the facility is in seismic shutdown response mode.~~	

~~3.11.3.2 Control Valves and Instruments~~

~~3.11.3.2.1 Instrument Service Air - Air Supply~~

~~**Requirement:** The HFP control valves and instruments shall interface with the ISA system to receive air supply to provide the motive force to open/operate control valves and instruments. (I.3).~~

~~**Basis Discussion:** Remote operation reduces personnel exposure.~~

~~[ALARA]~~

~~**Verification:** Verification is expected to be achieved through the following:~~

~~Verif. Method~~	~~Verif. By~~	~~Plan~~	~~Notes/Comments~~
~~R~~	~~ENG~~	~~Review of design to verify the HFP control valves and instruments interfaces with the ISA system.~~	

~~3.11.4 Other Technical, Specialty, Operations and Maintenance Requirements~~

~~None.~~

5 Sources, Bases, and Other References

5.1 Source / Basis References

Document Number	Rev	Title	Text Reference
24590-WTP-DB-ENG-01-001	7~~2~~	Basis of Design	BOD
24590-HLW-PL-RT-07-0001	3	IHLW Waste Form Compliance Plan for the Hanford Tank Waste Treatment and Immobilization Plant	IHLW ~~Waste Form Compliance Plan for WTP~~
24590-WTP-RPT-OP-01-001	9~~5~~	Operations Requirements Document	ORD
24590-WTP-PSAR-ESH-01-002-04	7~~5G~~	Preliminary Documented Safety Analysis to Support Construction Authorization; HLW Facility Specific Information	PDSA - HLW Facility
~~24590-WTP-PSAR-ESH-01-002-02~~	~~5C~~	~~Preliminary Documented Safety Analysis to Support Construction Authorization; PT Facility Specific Information~~	~~PDSA - PT Facility~~
24590-WTP-SRD-ESH-01-001-02	9~~7F~~	Safety Requirements Document, Volume II	SRD
~~DE-AC27-01RV14136~~	~~N/A~~	~~DOE/BNI WTP Contract Mod No. 304, Section C – Statement of Work~~	~~WTP Contract~~
WA7890008967~~, Part 3~~	N/A	Dangerous Waste Portion of RCRA Permit	DWP

Attachment 2
19-ECD-0036
(3 Pages Excluding Cover Sheet)

24590-HLW-3ZN-HFP-00002

Evaluation of Lines and Equipment in Black Cell
and Hard to Reach Areas

Issued by
RPP-WTP PDC

System Design Description Change Notice

CHANGE DOCUMENT NO. 24590-HLW-3ZN-HFP-00002

JOB NO.	TITLE FOR CHANGE NOTICE
24590	Evaluation of Lines and Equipment in Black Cell and Hard to Reach Areas

DOCUMENT NUMBER	REV	DOCUMENT NUMBER	REV
24590-HLW-3ZD-HFP-00001	1		

PART OF DESIGN CHANGE PACKAGE (DCP)? ☐ Yes ☒ No

JUSTIFICATION FOR NO DCP: The sytems has not been turned over.

INCORPORATES AN EIE? ☐ Yes ☒ No If yes, list EIEs:

JUSTIFICATION FOR CHANGE

Seismic design requirements from BOD and PDSA require separation in the SDD to enhance clarity.

Supersedes Change Document ☐ Yes ☒ No

REQUIREMENTS REVIEW

Client Approval Required ☐ Yes ☒ No | Interface Resolution Required * ☐ Yes ☒ No

Address any "yes" answers in the description

DESCRIPTION OF CHANGE

Changes are added (underlined) or deleted (~~strikethrough~~) as provided in the attachment.

Change content summary detail: Revises section **3.4.2.4 Seismic Design**, to create subsections 3.4.2.4.1 *Nuclear Safety* and 3.4.2.4.2 *Black Cell and Hard to Reach Areas,* which separate the two different aspects of the original requirement.

ORIGINATOR
ORG/Discipline – Rhett Tranbarger

Originator
By: Rhett Tranbarger - rktranba
Org Name:
Placed: Mar 21, 2019

CHECKER
Jerid Mauss

Checked
By: Jerid Mauss - jlmauss
Org Name:
Placed: Mar 21, 2019

Validation:	Mechanical Systems	Sarah Barker		3/29/19
	Organization/Area of Responsibility	*Print/Type Name*	*Signature*	*Date*
Validation:	Nuclear Safety	Mike Greutman		3/29/19
	Organization/Area of Responsibility	*Print/Type Name*	*Signature*	*Date*
Concurrence:	MOE/DA	Ian Milgate		3/29/19
	Title	*Print/Type Name*	*Signature*	*Date*
Approval:	Systems Engineering Manager	Sarah Barker		3/29/19
	Title	*Print/Type Name*	*Signature*	*Date*

3.4.2.4 Seismic Design

3.4.2.4.1 Seismic Design Categories for HCP/HFP Equipment, Piping and Interlocks

Requirement: ~~The~~ HCP/HFP system equipment, piping and interlocks shall be designed and qualified for seismic conditions in accordance with Table 3-4 below. ~~This equipment shall be designed using revised ground motion (RGM) or WTP Site-Specific Ground Motion (WSGM).~~ [Sections 4.3.1.1.4, 4.4.1.1.4, 4.4.2.3.4, 4.4.2.5.4, 4.4.2.6.3, 4.4.2.7.3, 4.4.6.1.4, Appendix M, HLW PDSA] ~~[Sections 4.4.1, 16.4.2.7, Appendix B, BOD]~~

Table 3-1 HCP/HFP System Seismic Design Categories

Description	Seismic Category	Reference
Melter Feed Seismic Interlock Final Elements	**SC-I**	Sections 4.3.1.1.4, 4.4.1.1.4, Appendix M, HLW PDSA
HFP Centrifugal Transfer Pumps Seismic Interlock Final Elements	**SC-I**	Section 4.3.1.1.4, 4.4.1.1.4, Appendix M, HLW PDSA
C5 Confinement Boundary Valves on Piping Penetrations Equal to or Exceeding 4 Inches (GFR Feed Lines)	**SC-I**	Section 4.3.1.1.4, 4.4.1.1.4, Appendix M, HLW PDSA
Facility - Design Feature (Shielding, e.g., joggles/offsets)	**SC-III**	Appendix M, HLW PDSA
HFP/HCP Coaxial Process Piping from the HLW Facility Penetration to the Melter Cave Wall Box, Including Melter Cave Cross-Connect Piping	**SC-III**	Appendix M, HLW PDSA
HFP/HCP Process Jumpers and Inline Components	**SC-III**	Appendix M, HLW PDSA
HFP Vessels (including overflow piping)	**SC-I**	Section 4.4.2.3.4, Appendix M, HLW PDSA
HFP Vessel High Level Interlock	**SC-III**	Appendix M, HLW PDSA
HFP Vessel Headspace Air Purge and Purge Piping	**SC-I**	Section 4.4.2.5.4, Appendix M, HLW PDSA
HFP Vessel Agitators	**SC-III**	Section 4.4.2.6.3, Appendix M, HLW PDSA
Sump Transfer Piping	**SC-III**	Section 4.4.2.7.3, Appendix M, HLW PDSA
Melter Plenum Pressure Interlock Final Elements	**SC-III**	Appendix M, HLW PDSA
SBS Low-Level Interlock Final Elements	**SC-I**	Appendix M, HLW PDSA
HOP HEPA Filter High Temperature Interlock Final Elements	**SC-III**	Appendix M, HLW PDSA
HOP HEPA Filter dP Interlock Final Elements	**SC-III**	Appendix M, HLW PDSA
HOP Secondary Offgas Loss of Vacuum Interlock Final Elements	**SC-III**	Appendix M, HLW PDSA
ASX Leak Detection Interlock Final Elements	**SC-III**	Appendix M, HLW PDSA
C5 Area Ventilation Exhaust System (C5V) [Piping penetrations through the C5 boundary greater than 4” diameter up to and including the isolation external to the C5 zone (e.g., GFR Feed Pipes)]	**SC-I**	Section 4.4.6.1.4, Appendix M, HLW PDSA
C5V HEPA Filter High dP Interlock Final Elements	**SC-I**	Appendix M, HLW PDSA
~~Piping in Black Cells~~	~~**SC-I**~~	~~Section 16.4.2.7, BOD~~

Description	Seismic Category	Reference
Post-Accident Monitoring (PAM) instruments	**Seismic category designations per PAM report***	Safety Criterion 4.3-4, SRD

*24590-HLW-RPT-ENS-12-002, *HLW Preliminary Post Accident Monitoring Report*

Basis Discussion: Section 2.4.12 of 24590-WTP-PSAR-ESH-01-002-01, *Preliminary Documented Safety Analysis to Support Construction Authorization; General Information* states the following: "All components and parts of the equipment that provide or contribute to the safety functions and accident monitoring functions, including equipment supports and anchorage, shall be qualified accordingly." This qualification ensures SSCs meet the designated seismic design requirements. The SRD, Safety Criterion 4.1-3 details the equivalence of the WTP seismic category to the seismic performance category of DOE-STD-1020-94, *Natural Phenomena Hazards Design and Evaluation Criteria for Department of Energy Facilities*. The SRD also states that SSCs designated as safety SSCs be designed to withstand the effects of natural phenomena hazard (NPH) events (e.g., earthquakes, wind, and floods) without loss of capability to perform specified safety functions.

Verification: Verification is expected to be achieved through the following:

Verif. Method	Verif. By	Plan	Notes/Comments
A/T	**ENG/ SUP**	Perform an analysis or supplier testing on equipment, piping and interlocks listed in Table 3-4 to verify the capability to withstand a seismic event.	
R	**ENG**	Review the design to verify conformance to the as-tested/as-analyzed configuration.	

3.4.2.4.2 Black Cell and Hard-to-Reach Areas

Requirement: Piping within black cell and hard-to-reach areas shall be evaluated using the Seismic Category I (SC-I) design basis earthquake (DBE) to ensure it will not prevent an SC-I structure, system, or component (SSC) from performing its seismic safety function. Vessels in the black cells and hard-to-reach areas shall be evaluated using approved SC-I methods and acceptance criteria as defined in the SRD. These vessels shall be evaluated for the building response spectra resulting from the revised ground motion (RGM), unless specifically listed in Appendix B of the BOD for acceptability of use of WTP Site-Specific Ground Motion (WSGM). [Sections 4.4.1, 16.4.2.1, 16.4.2.7, Appendix B, BOD]

Basis Discussion: Vessels shall be evaluated for the building response spectra resulting from the revised ground motion (RGM) unless the consequences of continued use of RGM result in 1) hazardous work required to modify existing vessel internals, 2) increased complexity of design which can result in decreased constructability, operability, maintainability, and reliability, and/or 3) increased cost and schedule, in which case, the vessels shall be designed to the building response spectra resulting from the WTP Site-Specific Ground Motion (WSGM) as allowed by specific identification in Appendix B of the BOD.

Verification: Verification is expected to be achieved through the following:

Verif. Method	Verif. By	Plan	Notes/Comments
A/T	**ENG /SUP**	Perform an analysis or supplier testing on piping and vessels located in black cell and hard-to-reach areas to demonstrate the capability to withstand a seismic event.	
R	**ENG**	Review the design to verify conformance to the as-tested/as-analyzed configuration.	

Attachment 3
19-ECD-0036
(93 Pages Excluding Cover Sheet)

24590-HLW-3ZN-RLD-00002

HLW RLD System Design Description Change Notice
to Align with the HLW PDSA

ISSUED BY

RPP-WTP PDC

System Design Description Change Notice

CHANGE DOCUMENT NO. 24590-HLW-3ZN-RLD-00002

JOB NO.	TITLE FOR CHANGE NOTICE
24590	HLW RLD System Design Description Change Notice to Align with the HLW PDSA

DOCUMENT NUMBER	REV	DOCUMENT NUMBER	REV
24590-HLW-3ZD-RLD-00001	0		

PART OF DESIGN CHANGE PACKAGE (DCP)? ☐ Yes ☒ No

Justification for no DCP: Impacted SSC has not been turned over to the Plant Management organization.

INCORPORATES AN EIE? ☐ Yes ☒ No If yes, list EIEs:

JUSTIFICATION FOR CHANGE

The requirements in HLW RLD SDD are being updated to align with the current HLW PDSA, as well as other upper tier design source documents.

Supersedes Change Document ☒ Yes ☐ No Document # 24590-HLW-3ZN-RLD-00001

REQUIREMENTS REVIEW

Client Approval Required ☐ Yes ☒ No | Interface Resolution Required * ☐ Yes ☒ No

Address any "yes" answers in the description

DESCRIPTION OF CHANGE

The requirements in HLW RLD SDD are being updated to align with the current HLW PDSA, as well as other upper tier design source documents. The functional analysis of the system was simplified so as not to impose restrictive requirements on the design. These design solution requirements were removed from the SDD.

The changes to the document are shown as added (underline) and deleted (~~strikethrough~~) in the provided attachment.

ORIGINATOR	CHECKER
Systems Engineering – Peter Suyderhoud	Systems Engineering - Steve Cross

Originator By: Peter Suyderhoud - pasuyder Org Name: Placed: Oct 10, 2018

10/10/18

	Organization/Area of Responsibility	Print/Type Name	Signature	Date
Validation:	Controls & Instrumentation Design	Neal J Schertz	Neal J Schertz	9/27/18
Validation:	Electrical Design & AHJ	Scott Goad	Email Concurrence*	10/9/2018
Validation:	Mechanical Systems Design	Sarah Barker	SBarker	10-11-18
Validation:	Plant Design	Jim McGrath	Email Concurrence*	9/26/2018
Validation:	Process Engineering	Bob Hanson	[illegible]	10/10/18
Validation:	Materials Engineering/Technology	John Julyk	Email Concurrence*	10/4/2018
Validation:	Environmental Protection	Roger Landon	Email Concurrence*	9/27/2018
Validation:	Nuclear Safety Engineering	Kraig Wendt	K. Wendt	10-8-18

System Design Description Change Notice

CHANGE DOCUMENT NO.
24590-HLW-3ZN-RLD-00002

JOB NO.	TITLE FOR CHANGE NOTICE
24590	HLW RLD System Design Description Change Notice to Align with the HLW PDSA

Validation:	Radiological Engineering	Robert English	Robert English	9/26/2018
	Organization/Area of Responsibility	*Print/Type Name*	*Signature*	*Date*
Validation:	Operations Requirement Document	Dan Rovira	Email Concurrence*	9/27/2018
	Organization/Area of Responsibility	*Print/Type Name*	*Signature*	*Date*
Validation:	Quality Assurance	Greg Butt	Email Concurrence*	9/26/2018
	Organization/Area of Responsibility	*Print/Type Name*	*Signature*	*Date*
Concurrence:	N/A	N/A		
	Title	*Print/Type Name*	*Signature*	*Date*
Concurrence:	Manager of Engineering and Design Authority	Ian Milgate		10/11/18
	Title	*Print/Type Name*	*Signature*	*Date*
Approval:	Systems Engineering Manager	Sarah Barker		10/11/18
	Title	*Print/Type Name*	*Signature*	*Date*

*Email concurrence for validation emails can be found on 24590-HLW-EDR-SYSE-18-0008

Figure 2-3 ~~HLW Radioactive Liquid Waste Disposal~~RLD System Functional Block Diagram

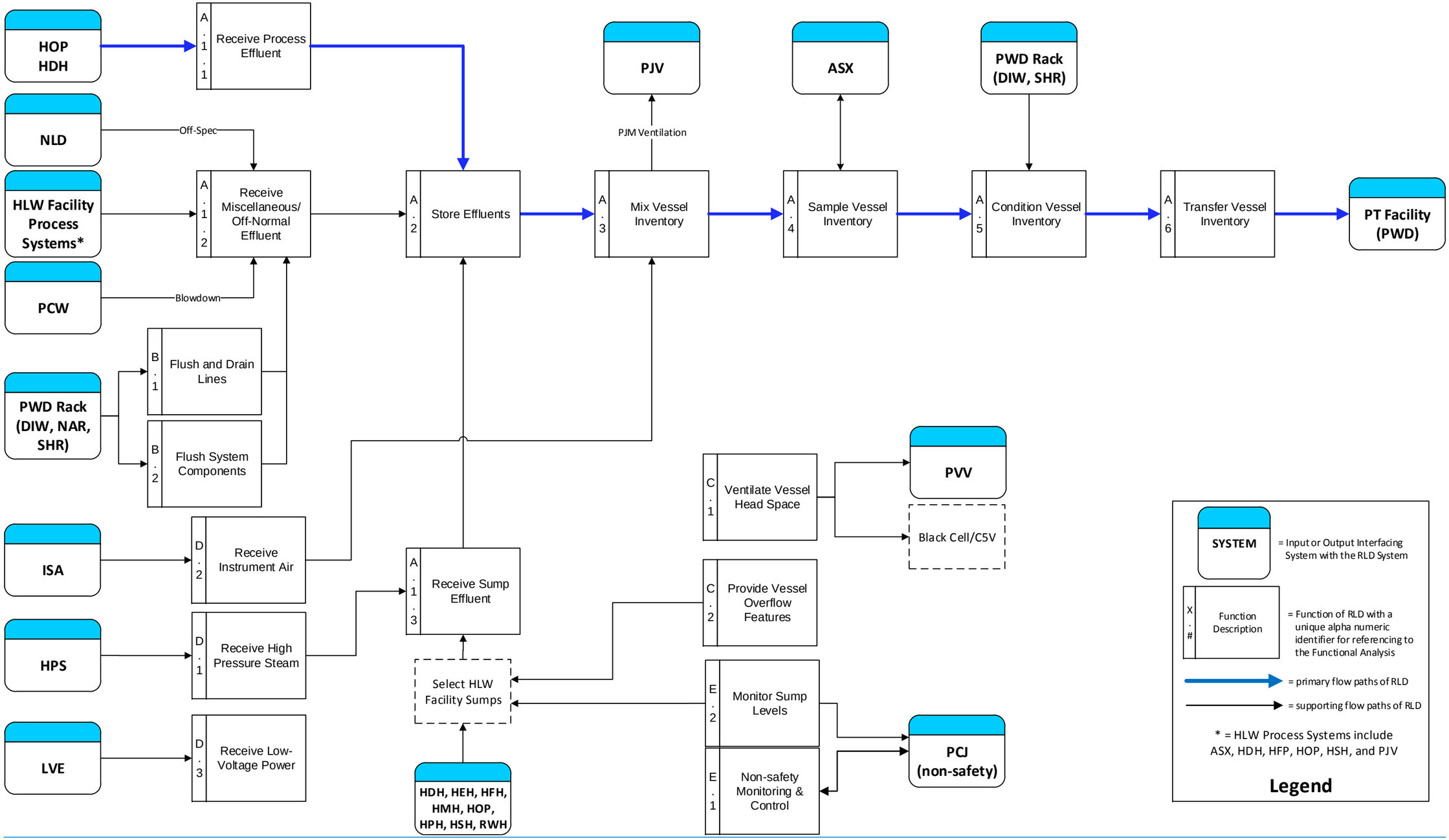

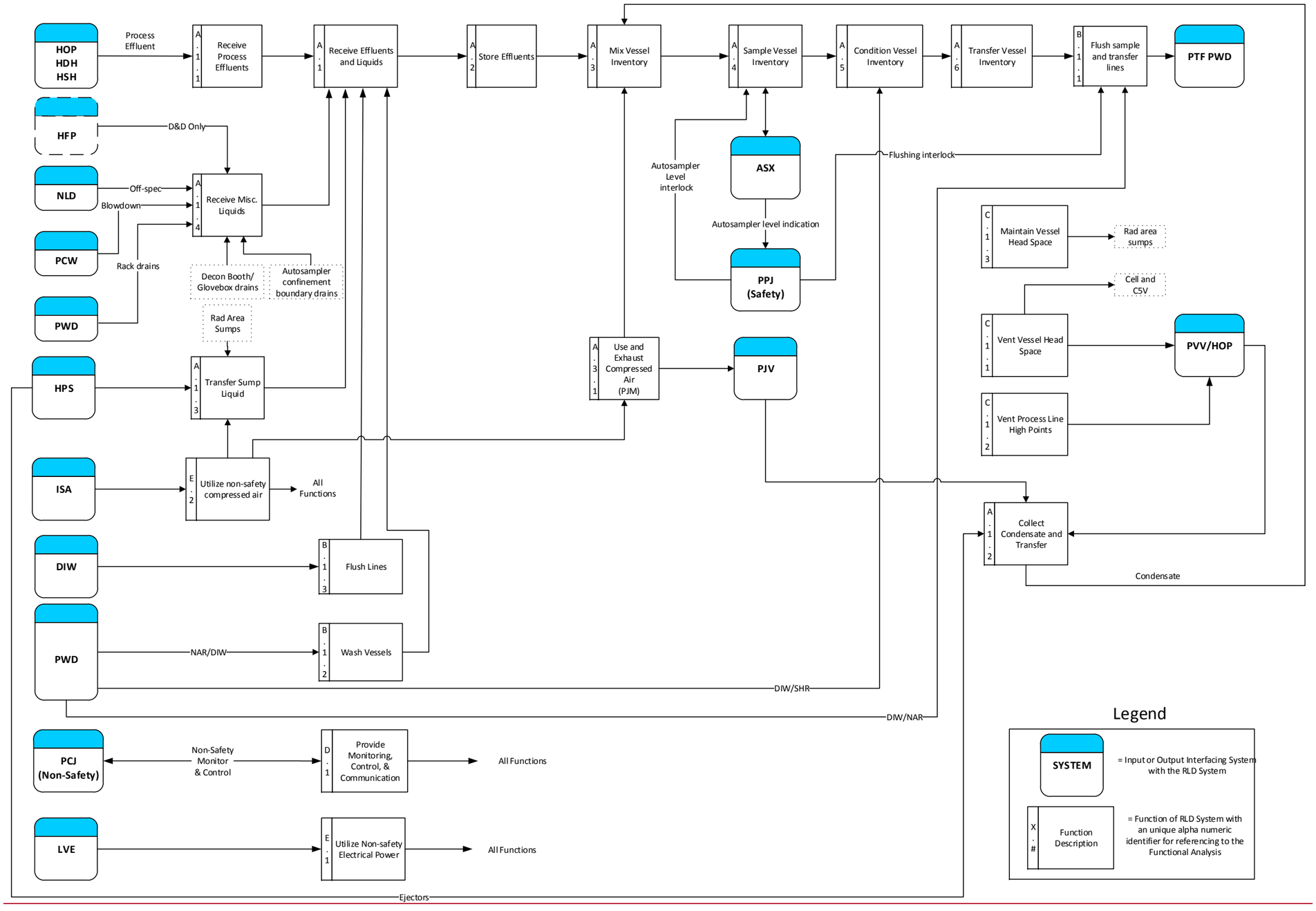
HOP
HDH
HSH
Process Effluent
A.1.1 Receive Process Effluents
A.1 Receive Effluents and Liquids
A.2 Store Effluents
A.3 Mix Vessel Inventory
A.4 Sample Vessel Inventory
A.5 Condition Vessel Inventory
A.6 Transfer Vessel Inventory
B.1.1 Flush sample and transfer lines
PTF PWD
HFP
D&D Only
NLD
Off-spec
Blowdown
A.1.4 Receive Misc. Liquids
PCW
Rack drains
PWD
Decon Booth/ Glovebox drains
Autosampler confinement boundary drains
Rad Area Sumps
HPS
A.1.3 Transfer Sump Liquid
ISA
E.2 Utilize non-safety compressed air
All Functions
DIW
B.1.3 Flush Lines
PWD
NAR/DIW
B.1.2 Wash Vessels
DIW/SHR
DIW/NAR
Autosampler Level interlock
ASX
Autosampler level indication
PPJ (Safety)
Flushing interlock
A.3.1 Use and Exhaust Compressed Air (PJM)
PJV
C.1.3 Maintain Vessel Head Space
Rad area sumps
Cell and C5V
C.1.1 Vent Vessel Head Space
PVV/HOP
C.1.2 Vent Process Line High Points
A.1.2 Collect Condensate and Transfer
Condensate
PCJ (Non-Safety)
Non-Safety Monitor & Control
D.1 Provide Monitoring, Control, & Communication
All Functions
LVE
E.1 Utilize Non-safety Electrical Power
All Functions
Ejectors
Legend
SYSTEM
= Input or Output Interfacing System with the RLD System
X.# Function Description
= Function of RLD System with an unique alpha numeric identifier for referencing to the Functional Analysis

The functions included in Figure 2-3 are the primary and secondary level functions of the ~~HLW~~ RLD system, which are further described in Table 2-1. Figure 2-3 is not intended to show all functional blocks described in Table 2-1. Where appropriate to support definition of functional and design requirements, functions have been further decomposed and additional levels of supporting functions are described. The requirement section number provides the location of the applicable functions analysis incorporated into system requirements.

Table 2-1 Functional Analysis and Crosswalk to Requirements

Reference	Functional Analysis Description	Requirement Section No.
A.	**Receive, Store, Process, and Transfer Effluents**	**N/A**
A.1	Receive Effluents	N/A
A.1.1	Receive Process Effluent – The RLD system receives effluent from the HOP and HDH systems during normal operations.	3.4.1.1.1
A.1.2	Receive Miscellaneous/Off-Normal Effluent - The RLD system receives several non-routine discharges and drains.	3.4.1.1.3
A.1.3	Receive Low-Solids Sump Effluent – The RLD system receives effluent from select C3 and C5 area sumps that cannot contain waste slurry. This design precludes the introduction of non-Newtonian solutions into the RLD system.	3.4.1.1.4 3.7.1.1
A.2	Store Effluents – The RLD system vessels store mixed effluent received from various HLW Facility sources.	3.5.1.2 3.5.1.3 3.5.1.4
A.3	Mix Vessel Inventory – The RLD system includes a provision for the effective homogenization of vessel contents, the re-suspension of settled solids, and the blending of cold chemicals with active process liquids.	3.5.1.9
A.4	Sample Vessel Inventory – The RLD system interfaces with the ASX system to sample the effluent contained with the vessels.	3.5.3.15
A.5	Condition Vessel Inventory – If required, the RLD system neutralizes the waste collected in the system.	3.5.1.12
A.6	Transfer Vessel Inventory – The RLD system provides the motive force to transfer mixed waste to the PT Facility.	3.7.1.2
B.	**Maintain System Components**	**N/A**
B.1	Flush and Drain Lines – Process piping can be flushed and drained to support decontamination and maintenance activities.	3.6.1.1.9 3.6.1.1.10 3.6.1.2.4 3.6.4.2
B.2	Flush System Components – Vessels and pumps can be flushed to support maintenance, repair, and replacement.	3.5.4.1
C.	**Protect Vessels**	**N/A**
C.1	Ventilate Vessel Headspace – The headspace of RLD system vessels is purged to prevent the buildup of hydrogen.	3.5.1.10
C.2	Provide Vessel Overflow Features – The RLD system vessels include overflow lines in the event that normal process controls do not prevent overfilling.	3.5.1.5 3.5.1.6 3.5.1.7 3.5.1.8 3.9.2.4

Reference	Functional Analysis Description	Requirement Section No.
D.	**Receive External Utilities**	**N/A**
D.1	Receive High Pressure Steam – The RLD system receives high pressure steam from the HPS system for use in steam motivated jet systems.	N/A
D.2	Receive Instrument Air – The RLD system receives instrument air from the ISA system for remote valve actuation, line purging, and pulse-jet mixing.	N/A
D.3	Receive Low-Voltage Power – The RLD system receives non-safety low voltage power for all equipment and instruments.	N/A
E.	**Provide Monitoring and Controls**	**N/A**
E.1	Non-safety Monitoring, Control, and Communications – The RLD interfaces with the PCJ system for monitoring and control functions.	3.9.3.1
E.2	Monitor Sump Levels – The RLD system monitors the level in select HLW Facility sumps and provides leak detection in the event of a spill or overflow.	3.9.1.4 3.9.2.1

~~Reference~~	~~Functional Analysis Description~~	~~Requirement Section No.~~
~~**A.**~~	~~**Receive, process, and transfer effluents and liquids**~~	~~N/A~~
~~A.1~~	~~Receive effluents and liquids – All radioactive process effluents and miscellaneous liquids generated during production of high-level waste glass are collected in RLD vessels RLD-VSL-00007, RLD-VSL-00008, and RLD-VSL-00002.~~	~~3.4.1.1.1, 3.5.1.2, 3.5.1.3, 3.5.1.4~~
~~A.1.1~~	~~Receive process effluents.~~	~~3.5.1.2, 3.5.1.3, 3.5.3.1.1, 3.5.3.1.2, 3.5.3.5, 3.5.3.6~~
~~A.1.2~~	~~Collect and transfer offgas condensate – The continuous function of RLD-VSL-00002 is to collect radioactive condensate from the PVV and HOP offgas and the PJV offgas drain lines. The condensate is routinely transferred using steam ejectors to RLD vessels RLD-VSL-00007 or RLD-VSL-00008.~~	~~3.5.1.4, 3.5.3.1.3, 3.5.3.2, 3.7.3.1, 3.8.3.3~~
~~A.1.3~~	~~Transfer liquid from C3/C5 area sumps to RLD vessels RLD-VSL-00007/8.~~	~~3.5.3.12~~
~~A.1.4~~	~~Receive miscellaneous liquids.~~ ~~• Receive off-spec NLD effluent in RLD vessel RLD-VSL-00008.~~ ~~• Receive heel flush transfers from the HFP vessels in RLD vessel RLD-VSL-00008 during decontamination and decommissioning.~~ ~~• Receive blowdown from plant cooling water system (PCW) cooling loops.~~ ~~• Receive drains from the PWD racks.~~	~~3.5.1.3, 3.5.3.7.1, 3.5.3.10, 3.5.3.11~~
~~A.1.4.1~~	~~Receive liquids from the decon booth or glove box to vessel RLD-VSL-00008~~	~~3.5.3.13~~
~~A.1.4.2~~	~~Receive liquids from the autosampler ASX-SMPLR-00028 confinement boundary drains.~~	
~~A.2~~	~~Store effluents – Effluents received in RLD vessels RLD-VSL-00007 and RLD-VSL-00008 are temporarily stored until the inventory is sufficient to warrant conditioning and transfer to the PT Facility.~~	~~3.5.1.2, 3.5.1.3~~
~~A.3~~	~~Mix vessel inventory – Mixing of the vessel inventory is performed to suspend insoluble solids and to blend liquids.~~	~~N/A~~

~~Reference~~	~~Functional Analysis Description~~	~~Requirement Section No.~~
~~A.3.1~~	~~Use and exhaust compressed air (PJM) – Instrument air from the ISA system is used to power the jet pump pairs that control the PJMs used for mixing vessel inventory.~~	~~3.8.3.2~~
~~A.3.2~~	~~Mixing of the vessel inventory is routine prior to/and during sampling, conditioning, and transfer of the inventory to the PT Facility.~~	~~3.8.1.1, 3.8.1.2.1~~
~~A.4~~	~~Sample vessel inventory – The RLD vessel inventory is circulated through an auto sampler (ASX-SAMPLR-00028), which extracts a sample to the ASX system for analysis in the Analytical Laboratory. Transfers to the autosampler are performed by the RLD sample transfer pumps. A safety high level signal from the autosampler initiates a pump stop signal to the sample/transfer pumps.~~	~~3.5.3.15, 3.9.2.2~~
~~A.5~~	~~Condition vessel inventory – These functions involve addition of sodium hydroxide, vessel cooling, and makeup water to RLD-VSL-00007 and RLD-VSL-00008.~~	~~N/A~~
~~A.5.1~~	~~Sample data or process knowledge is used to determine the quantity of sodium hydroxide reagent required to neutralize the inventory and to increase the solution pH.~~	~~3.5.3.8.1~~
~~A.5.2~~	~~Demineralized water (makeup) is added via the PWD rack to the vessels to maintain a hydraulic seal.~~	~~3.5.3.9~~
~~A.6~~	~~Transfer vessel inventory – Conditioned effluent is batch transferred to the PT Facility for processing.~~	~~3.5.3.14~~
~~**B.**~~	~~**Flush/Wash Components**~~	~~N/A~~
~~B.1~~	~~Flush system – Flushing is necessary to ensure system performance.~~	~~N/A~~
~~B.1.1~~	~~Flush sample and transfer lines following each use to remove solids from the lines. Demineralized water and nitric acid reagent flush volume are supplied from the PWD rack. A safety interlock prevents sample/transfer pump operation if the system is aligned for flushing activities.~~	~~3.6.3.1, 3.9.2.3~~
~~B.1.2~~	~~Wash RLD vessels RLD-VSL-00007 and RLD-VS-00008 with demineralized water as necessary to remove heel liquid and solids. DIW wash volume and NAR for decontamination are supplied from the PWD rack.~~	~~3.5.3.8.2, 3.5.4.1~~
~~B.1.3~~	~~Flush and wash system components as required to keep radiation exposure as low as reasonably achievable (ALARA) for maintenance. Flush water is supplied directly from the DIW distribution header.~~	~~3.6.3.1~~
~~B.1.3.1~~	~~Flush transfer lines from RLD-VSL-00007 and RLD-VSL-00008 to PWD-VSL-00033 and PWD-VSL-00043.~~	~~3.6.3.1~~
~~B.1.3.2~~	~~Flush sample/return lines.~~	~~3.6.3.1~~
~~B.1.3.3~~	~~Flush RLD-VSL-00007 and RLD-VSL-00008 recirculation lines from RLD sample and transfer pumps.~~	~~3.6.3.1~~
~~B.1.3.4~~	~~Flush PJMs drive piping.~~	~~3.8.3.1~~
~~B.1.3.5~~	~~Flush level detection bubbler lines in RLD-VSL-00007 and RLD-VSL-00008.~~	~~3.6.3.1~~
~~**C.**~~	~~**Provide Vent and Overflow**~~	~~N/A~~
~~C.1.1~~	~~Vent vessel headspace.~~	~~N/A~~

~~Reference~~	~~Functional Analysis Description~~	~~Requirement Section No.~~
~~C.1.1.1~~	~~Vent RLD vessel RLD-VSL-00007 and RLD-VSL-00008 headspaces to the process vessel vent exhaust system (PVV).~~	~~3.5.3.3~~
~~C.1.1.2~~	~~Vent RLD vessel RLD-VSL-00002 headspace to the C5 ventilation via the overflow.~~	~~3.5.3.4~~
~~C.1.2~~	~~Vent process line high points to the PVV for hydrogen mitigation.~~	~~3.6.1.1.1, 3.6.3.2~~
~~C.1.3~~	~~Maintain vessel headspace by providing an overflow path.~~	~~N/A~~
~~C.1.3.1~~	~~RLD vessel RLD-VSL-00002 overflows to the RLD-SUMP-00001.~~	~~3.5.1.5~~
~~C.1.3.2~~	~~RLD vessels RLD-VSL-00007 and RLD-VSL-00008 overflow to the HCP-SUMP-00001 via a seal loop to prevent the PVV/HOP system from being overwhelmed by the inflow of air through an open overflow line.~~	~~3.4.4.1, 3.5.1.5~~
~~**D.**~~	~~**Provide monitoring, control, and communication functions**~~	~~N/A~~
~~D.1~~	~~Non-Safety Monitoring, control, and communications – PCJ provides non-safety monitoring and control functions.~~	~~N/A~~
~~D.1.1~~	~~Monitor pressure~~	~~3.5.1.1.3, 3.9.1.1.1~~
~~D.1.2~~	~~Monitor liquid level~~	~~3.4.1.1.2, 3.9.1.1.1, 3.9.1.2.1, 3.9.2.1, 3.9.1.3.3~~
~~D.1.3~~	~~Monitor temperature~~	~~3.9.1.1.1, 3.9.1.3.1, 3.9.1.3.2~~
~~D.1.4~~	~~Process control through trips and interlocks via monitoring internal conditions in vessels, sumps, and associated piping~~	~~3.9.1.1.2, 3.9.1.1.5, 3.9.1.2.2, 3.9.1.2.3, 3.9.1.2.4, 3.9.1.3.2, 3.9.2.2, 3.9.2.3~~
~~**E.**~~	~~**Utilize External Services**~~	~~N/A~~
~~E.1~~	~~Utilize non-safety electrical power – The low voltage electrical (480/208/120 V) system (LVE) provides electrical power to the RLD equipment and instruments.~~	~~3.4.3.2~~
~~E.2~~	~~Utilize non-safety compressed air – Instrument air from the ISA system is used to provide motive power for remotely actuated valves, bubbler instrumentation, purge air for the RLD-VSL-00007 and RLD-VSL-00008 overflow lines, and for purging steam ejector lines via the steam racks.~~	~~3.4.3.1~~

3.3 References

The requirements include a source document reference. Each unique source document reference is bracketed separately. Requirements may include a reference to the Section 2.1, Functional Description, listed in parentheses following the source document. A complete listing of all source references is provided in Section 5.1.

~~A complete listing of all source references is in Section 5.1.~~

3.4 General Requirements

3.4.1 Mission and Functional/Performance Requirements (Including States/Modes)

3.4.1.1 Throughput (Design Capacity)

Requirement: The ~~HLW~~ RLD system shall be designed with sufficient capacity to support a HLW Facility production capacity of up to 7.5 MTG/day ~~production~~. [Sections 6, 6.3.3, BOD]~~(A.1)~~

Basis Discussion: Systems internal to the HLW Facility are designed to support the overall integrated vitrification process. The HLW Facility is designed to process waste with an availability of 70%. The facility design capacity is multiplied by the availability to derive the waste treatment capacity for the facility~~None~~.

Verification: Verification is expected to be achieved through the following:

Verif. Method	Verif. By	Plan	Notes/Comments
A	**ENG**	Perform an analysis to verify that the ~~HLW~~ RLD system ~~receipt, storage and transfer capacities~~ supports the required HLW Facility designed throughput.	
R	**ENG**	Review the design of the RLD system to verify conformance to the analysis.	~~May be documented in an assessment/evaluation.~~

3.4.1.1.1 ~~Volume of Collected Effluents, Normal Operating Conditions~~Receive Process Effluents

Requirement: ~~The HLW-RLD shall be capable of receiving the volumes of effluent from the HOP, the HDH, the HSH, out-of-specification streams from NLD, radioactively contaminated blowdown from PCW, sample line flushes from ASX-SMPLR-00028, and periodic plant and vessel washes within the HLW Facility.~~The RLD system shall be capable of receiving mixed waste from the HLW Melter Offgas Treatment Process (HOP) system, the HLW Canister Decontamination Handling (HDH) system, and periodic plant and vessel washes within the HLW Facility. [Section 4F.2.3, DWP] (A.1.1)

Basis Discussion: None.

Verification: Verification is expected to be achieved through the following:

Verif. Method	Verif. By	Plan	Notes/Comments
~~**A**~~	~~**ENG**~~	~~Perform analysis to verify that the RLD vessels have been sized to accept the required waste transfers.~~	
R	**ENG**	Review the design to verify that the RLD system is capable of receiving mixed waste from the HOP system, the HDH system, and periodic plant and vessel washes within the HLW Facility~~conformance with analysis and that the HLW-RLD vessels receive effluent from the HOP, the HDH, the HSH, out-of-specification streams from NLD, radioactively contaminated blowdown from PCW, and periodic plant and vessel washes within the HLW Facility~~.	

3.4.1.1.2 ~~Transfer Volume Balances~~Moved to 3.9.4.4

~~**Requirement**: The HLW-RLD system shall have the capability to determine volume balances during transfers to or from the acidic waste vessel, the plant wash and drains vessel, or the offgas drains collection vessel. [Section 7.1, ORD] (D.1.2)~~

~~**Basis Discussion**: None.~~

~~**Verification**: Verification is expected to be achieved through the following:~~

~~Verif. Method~~	~~Verif. By~~	~~Plan~~	~~Notes/Comments~~
~~R~~	~~ENG~~	~~Review design to verify that the HLW-RLD has the capability to measure volume balances during transfer.~~	
~~T~~	~~SU/COM~~	~~Verify the capability to determine volume balance during transfers to the acidic waste vessel, and the plant wash and drains vessel.~~	

3.4.1.1.3 Receive Miscellaneous Effluents

Requirement: The RLD system shall be capable of receiving miscellaneous mixed waste streams. [Section 4F.2.3, DWP] (A.1.2)

Basis Discussion: Examples of miscellaneous waste streams include PJV system line drains, autosampler drains, and effluents from decontamination of equipment in the HSH system.

Verification: Verification is expected to be achieved through the following:

Verif. Method	Verif. By	Plan	Notes/Comments
R	ENG	Review the design to verify that the RLD system has the capability to receive miscellaneous mixed waste streams.	

3.4.1.1.4 Receive Low-Solids Sump Effluents

Requirement: The RLD system shall be capable of receiving various HLW Facility low-solids sump effluent. [Section 4F.2.3, DWP] (A.1.3)

Basis Discussion: The RLD system only collects sump effluents from sources that cannot contain waste slurry. This design precludes the introduction of non-Newtonian solutions into the RLD system.

Verification: Verification is expected to be achieved through the following:

Verif. Method	Verif. By	Plan	Notes/Comments
R	ENG	Review the design to verify that the RLD system is capable of receiving various HLW Facility low-solids sump effluent.	

3.4.1.2 Design Life

3.4.1.2.1 ~~Design (Operating) Life~~Material Selection for Accessible Plant Equipment

Requirement: ~~Nonreplaceable, permanent HLW-RLD system plant equipment listed in Table 3-1 shall be designed for a minimum design life of 40 years, inclusive of maintenance. All nonmaintainable items of HLW-RLD system equipment shall be designed to last the life of the facility (40 years). Design life of equipment shall consider the effects of chemical, radiological and thermal exposure. [Section C.7, paragraph (a)(1), Hanford Tank Waste Treatment and Immobilization Plant (WTP) Contract No. DE-AC27-01RV14136]~~ The RLD system equipment not installed in black cells shall be constructed of materials compatible with the HLW Facility room operating environment in which they are installed over a nominal plant life of 40 years, inclusive of maintenance. [Sections 11.1.1,11.4.1, 11.9, ~~11.7.4, 12.3.1.1, 14.1 16.4.1.1, 16.4.2.2,~~ BOD] [Section ~~14.1~~14.8, ORD]

Table 3-1 ~~**HLW-Radioactive Liquid Waste Disposal System Equipment and Components Design Life**~~**Deleted**

~~Equipment/Component Description~~	~~Design Life (Years)~~
~~Plant wash and drains vessel~~	~~40~~
~~Acidic waste vessel~~	~~40~~
~~Offgas drains collection vessel~~	~~40~~
~~Pulse jet mixers~~	~~40~~
~~Jet pump pairs~~	~~40~~
~~Steam ejectors~~	~~40~~
~~HLW-RLD piping and jumpers~~	~~40~~
~~Breakpots~~	~~40~~

Basis Discussion: ~~Equipment and material selection is based on proven performance, value engineering principles, and fit-for-function principles. The selection of equipment and materials is further addressed in detail as the design progresses. Equipment design needs to consider the routine environmental exposures under normal operations for non-safety equipment; safety and post accident monitoring (PAM) equipment also considers abnormal and emergency exposures — this minimizes the need for equipment maintenance, exposure, and radiological waste generation in radiological areas.~~ Operating environment considerations include but are not limited to chemical, radiological, and thermal exposure during all operating conditions. Equipment accessibility and maintenance contribute to the material selection process. The selection of equipment installed in remotely maintained caves and cells addresses the operating environment to minimize maintenance requirements. Other accessible and maintainable equipment not having a design life of 40 years is specified for a cost-effective design life, taking into account current technology, ALARA exposure principles, and waste minimization. 24590-HLW-U0D-W16T-00001, *HLW Room Environment Data Sheet*, identifies environmental conditions for rooms that house safety SSCs while Table 12-1 of the BOD provides the internal design temperatures for other rooms in the facility. [ALARA]

Verification: Verification is expected to be achieved through the following:

Verif. Method	Verif. By	Plan	Notes/Comments
~~**A/T**~~	~~**ENG**~~	~~The "qualified" design life for safety SSCs is to be verified through equipment environmental qualification documentation that may be accomplished through analysis or testing.~~	~~Design life for safety and PAM equipment to be documented in equipment qualification packages~~
R	**ENG**	Review the design to verify that RLD system equipment not installed in black cells is constructed of materials compatible with the HLW Facility room operating environment in which they are installed over a nominal plant life of 40 years, inclusive of maintenance.~~Review design to verify design life of non-replaceable, non-maintainable SSCs is documented in procurement documents and supported by supplier certificates of conformance.~~	~~May be documented in an assessment/evaluation.~~

3.4.1.2.1.1 Material Selection for Equipment in Black Cells

Requirement: The RLD system equipment installed in black cells and hard-to-reach areas not provided with redundancy shall be constructed of materials compatible with the HLW Facility room operating environment in which they are installed over a design life of 40 years without maintenance activities. [Sections 11.1.1, 11.7.4, 11.9, 16.4.1.1, 16.4.2.2, BOD]

Basis Discussion: Operating environment considerations include but are not limited to chemical, radiological, and thermal exposure during all operating conditions. 24590-HLW-U0D-W16T-00001, *HLW Room Environment Data Sheet*, identifies environmental conditions for rooms that house safety SSCs while Table 12-1 of the BOD provides the internal design temperatures for other rooms in the facility.

Verification: Verification is expected to be achieved through the following:

Verif. Method	Verif. By	Plan	Notes/Comments
R	ENG	Review the design to verify that RLD system equipment not installed in black cells is constructed of materials compatible with the HLW Facility room operating environment in which they are installed over a nominal plant life of 40 years, inclusive of maintenance	

3.4.1.2.2 Material Selection for Process Fluids~~s of Construction and Erosion/Corrosion Design Parameters~~

Requirement: ~~The HLW-RLD system equipment and components shall include allowance for erosion/corrosion and use materials of construction for the fluid service conditions in order to meet the life expectancy that is identified in Section 3.4.1.2.1 of this SDD. [Safety Criterion 4.2-3, Appendix H Section 4, SRD] [Sections 9.1, 11.16, 14.16, 20.0, ORD] [Sections 6.7.4, 9.1, 11.4.1, 11.9, 14.10.1, 16.4.1.1, 16.4.1.4, BOD] [Section III.10.E.9.c.v, DWP-WA7890008967]~~The RLD system equipment and piping shall be constructed of materials compatible with the expected operating process fluid conditions over a nominal plant life of 40 years. [Sections 11.1.1, 11.9, 16.4.1.4, BOD]

Basis Discussion: When selecting materials for plant equipment, characteristics such as chemical resistance, hardness, and process compatibility are addressed. ~~The allowance for erosion/corrosion and applicable materials of construction are limited to those components that come into contact with the process fluids and that are required to maintain confinement/containment of those process fluids. Materials of construction that can withstand the erosive/corrosive waste effluents and chemicals are selected. The materials for the HLW-RLD system equipment and components should be selected based on the stream data presented in the process corrosion data sheet report. If vessel washing via internal spray mechanisms is needed to prevent or minimize corrosion, the operational limitation is identified in the vessel corrosion evaluation. Fluid characteristics of the process streams to be used for corrosion evaluation are described in 24590-WTP-RPT-PR-04-0001-01 through 24590-WTP-RPT-PR-04-0001-06, *WTP Process Corrosion Data*, volumes 1-6.~~

~~Details of the allowed materials and corrosion allowances can be found in:~~

~~24590-HLW-N1D-RLD-00001, RLD-VSL-00007 (HLW) - Acidic Waste Vessel~~
~~24590-HLW-N1D-RLD-00002, RLD-BRKPT-00007 & RLD-BRKPT-00009 - (HLW) Acidic Wash Transfer Breakpot - Corrosion Evaluation~~
~~24590-HLW-N1D-RLD-00006, RLD-VSL-00008 (HLW) - Plant Wash and Drains Vessel~~
~~24590-HLW-N1D-RLD-00009, RLD-BRKPT-00004 (HLW) - Wash Effluent Breakpot~~
~~24590-HLW-N1D-RLD-00013, RLD-VSL-00002 (HLW) - Offgas Drains Collection Vessel~~

[ALARA]

Verification: Verification is expected to be achieved through the following:

Verif. Method	Verif. By	Plan	Notes/Comments
A	ENG	Perform an analysis to verify the materials of construction are compatible with the expected operating process fluid conditions over the 40-year plant life.	
R	ENG	Review the design to verify that RLD system equipment and piping is constructed of materials compatible with the expected operating process fluid conditions determined in the analysis.	
~~A/I~~	~~ENG~~	~~Perform an analysis/inspection of materials used in the HLW RLD system which are in contact with, and are required to maintain containment of the process fluids, to verify that they are acceptable for use in the operating environment and have adequate erosion and corrosion allowances.~~	
~~R~~	~~ENG~~	~~Review design components used in the HLW RLD system which are in contact with, and are required to maintain containment of the process fluids, for concurrence with analysis.~~	

3.4.1.2.2.1 Material Corrosion Allowance

Requirement: The RLD system material corrosion allowance shall include erosion, corrosion, and synergistic effects, at minimum. [Section 18.5, BOD]

Basis Discussion: Specific corrosion/erosion design parameters are provided in requirements 3.4.1.2.2.2 through 3.4.1.2.2.21.

Verification: Verification is expected to be achieved through the following:

Verif. Method	Verif. By	Plan	Notes/Comments
A	ENG	Perform an analysis to verify the erosion, corrosion, and synergistic effects (at minimum) applicable to the material corrosion allowance of the RLD system.	
R	ENG	Review the design to verify that the RLD system material corrosion allowance includes erosion, corrosion, and synergistic effects (at minimum) as determined in the analysis.	

3.4.1.2.2.2 General Corrosion Wear Rate

Requirement: The RLD system corrosion allowance shall include the general uniform corrosion rate of 0.6 mpy (24 mils at 40 years), regardless of velocity, when utilizing materials identified in Table 18-1 of the BOD. [Section 18.6.1, BOD]

Basis Discussion: None.

Verification: Verification is expected to be achieved through the following:

Verif. Method	Verif. By	Plan	Notes/Comments
R	ENG	Review the design to verify that the RLD system material corrosion allowance includes the general uniform corrosion rate of 0.6 mpy (24 mils at 40 years), regardless of velocity, when utilizing materials identified in Table 18-1 of the BOD.	

3.4.1.2.2.3 Process Operating Limits Mitigating Localized Corrosion

Requirement: The RLD system shall not exceed the Process Localized Corrosion Design Limits specified in Table 18-1 of the BOD for the materials provided in the system. Materials outside the bounds of Table 18-1 shall be justified by analysis. [Section 18.6.2, Table 18-1, BOD]

Basis Discussion: Parameters impacting localized corrosion are pH, temperature, chloride to nitrate ratio, chloride to hydroxide ratio, and total chloride content. Table 18-1 in the BOD provides the design limits (design requirements) for each of these parameters for various materials. These values are bound by the process corrosion data (24590-WTP-RPT-PR-04-0001-01, *WTP Process Corrosion Data – Volume 1*, through 24590-WTP-RPT-PR-04-0001-06, *WTP Process Corrosion Data – Volume 6*) with additional margin applied.

Verification: Verification is expected to be achieved through the following:

Verif. Method	Verif. By	Plan	Notes/Comments
A	ENG	Perform an analysis to verify that the RLD system does not exceed the Process Localized Corrosion Design Limits specified in Table 18-1 of the BOD for the materials provided in the system. If the RLD system utilizes materials outside the bounds of Table 18-1, perform an additional analysis to verify the acceptable process localized corrosion design limits.	
R	ENG	Review the design to verify the RLD system does not exceed the Process Localized Corrosion Design Limits specified in Table 18-1 of the BOD or determined in the preceding analysis for the materials provided in the system.	

3.4.1.2.2.4 End Grain Corrosion Mitigation

Requirement: The design of the RLD system shall avoid the exposure of end grains to highly oxidizing acid conditions at high temperatures. [Section 18.8.2, BOD]

Basis Discussion: End grain corrosion is localized corrosion, which occurs along the worked direction of wrought stainless steels and Stellite™ exposed to highly oxidizing acid conditions as well as in other alloys under the "suitable" conditions.

Verification: Verification is expected to be achieved through the following:

Verif. Method	Verif. By	Plan	Notes/Comments
A	ENG	Perform an analysis to verify where end grain corrosion could occur in the RLD system.	

Verif. Method	Verif. By	Plan	Notes/Comments
R	ENG	Review the design to verify that the RLD system design avoids the exposure of end grains to highly oxidizing acid conditions at high temperatures, where determined to be applicable in the analysis.	

3.4.1.2.2.5 Stress Corrosion Cracking

Requirement: Where stress corrosion cracking is a potential source of corrosion in the RLD system and the system does not utilize materials within the design limits listed in Table 18-1 of the BOD, low carbon alloys such as 304L or 316L or more resistant alloys such as 6% Mo and Ni/Cr/Mo alloys shall be used. [Section 18.8.3, BOD]

Basis Discussion: Most metals and particularly alloys, including stainless steels and the nickel base alloys, can suffer stress corrosion cracking (SCC). The SCC phenomenon occurs when an appropriate stress is applied to the metal, a conducive environment is present, and the metal is susceptible. It is also important to ensure that stainless steel is not contaminated with carbon if welded directly to the stainless steel structure. Otherwise, it is possible for the stainless steel to be more susceptible to stress corrosion cracking and other forms of intergranular attack.

Verification: Verification is expected to be achieved through the following:

Verif. Method	Verif. By	Plan	Notes/Comments
A	ENG	Perform an analysis to verify the potential sources of stress corrosion cracking in the RLD system where the system does not utilize materials within the design limits listed in Table 18-1 of the BOD.	
R	ENG	Review the design to verify that the RLD system utilizes low carbon alloys or more resistant alloys where stress corrosion cracking is a potential source of corrosion as determined in the analysis.	

3.4.1.2.2.6 Crevice Corrosion

Requirement: In high oxidizing situations where crevice corrosion is a potential source of corrosion in the RLD system, low carbon alloys such as 304L or 316L or more resistant alloys such as 6% Mo and Ni/Cr/Mo alloys shall be used. [Section 18.8.4, BOD]

Basis Discussion: Crevice corrosion is a form of localized corrosion that can occur within crevices or at shielded surfaces where a stagnant solution is present, e.g., at metal/metal or metal/non-metal junctions such as under bolts, gaskets and valve seats. The presence of solid precipitates/sludges can also create crevice corrosion conditions. Crevice corrosion is similar to pitting in mechanism, though generally not so rapidly debilitating. It can, however, lead to pitting or stress corrosion cracking.

Verification: Verification is expected to be achieved through the following:

Verif. Method	Verif. By	Plan	Notes/Comments
A	ENG	Perform an analysis to verify the potential sources of crevice corrosion where the system does not utilize materials within the design limits listed in Table 18-1 of the BOD.	

Verif. Method	Verif. By	Plan	Notes/Comments
R	ENG	Review the design to verify that the RLD system utilizes low carbon alloys or more resistant alloys in high oxidizing situations where crevice corrosion is a potential source of corrosion as determined in the analysis.	

3.4.1.2.2.7 Microbial Induced Corrosion

Requirement: The RLD system shall only use treated process water, potable water, or deionized (demineralized) water during flushing or hydrostatic testing. [Section 18.8.6, BOD]

Basis Discussion: Using treated process water, potable water, or demineralized water minimizes the potential of microbial induced corrosion (MIC).

Verification: Verification is expected to be achieved through the following:

Verif. Method	Verif. By	Plan	Notes/Comments
R	ENG	Review the design of the RLD system to verify that only treated process water, potable water, or deionized (demineralized) water is used during flushing or hydrostatic testing.	

3.4.1.2.2.8 Corrosion Fatigue

Requirement: The RLD system vessels and piping shall be designed to accommodate the expected fatigue cycles over the 40-year design life. [Section 18.8.7, BOD]

Basis Discussion: Fatigue is the phenomenon leading to fracture under cyclic stresses that have a maximum value less than the tensile strength of the material. Corrosion fatigue is fatigue exacerbated by corrosion concurrent with or subsequent to the application of the stress.

Verification: Verification is expected to be achieved through the following:

Verif. Method	Verif. By	Plan	Notes/Comments
A	ENG	Perform an analysis to verify the expected fatigue cycles the RLD system vessels and piping are expected to accommodate over their 40-year design life.	
R	ENG	Review the design to verify that the RLD system is designed to accommodate the fatigue determined in the analysis.	

3.4.1.2.2.9 Vapor Phase Corrosion

Requirement: The RLD system shall consider the conditions in the regions in contact with vapor only or at the vapor/liquid interface in specifying corrosion allowances. [Section 18.8.8, BOD]

Basis Discussion: The conditions in the regions in contact with vapor only or at the vapor/liquid interface are different from those in the bulk liquor.

Verification: Verification is expected to be achieved through the following:

Verif. Method	Verif. By	Plan	Notes/Comments
R	ENG	Review the design of the RLD system to verify that vapor phase corrosion is considered in specifying corrosion allowances.	

3.4.1.2.2.10 Galvanic Corrosion Protection

Requirement: Galvanic corrosion protection shall be provided where required in the RLD system. [Section 18.8.9, BOD]

Basis Discussion: When a metal is immersed in a liquid it will establish a corrosion potential or rest potential at which the rate of anodic reaction is equal to the rate of cathodic reaction. When two dissimilar metals are placed in electrical contact in such a solution, an electrochemical cell will be set up and the difference in their rest potentials will cause a current to flow between them. In the WTP, though several alloys may be used in a given vessel, they often will be similar and corrosion potential differences may not be great. This similarity may cease, for example, in a crevice where one component may become active and corrode severely. Due to the use of steam ejectors and heated tanks, there are opportunities for the presence of thermogalvanic corrosion cells to be set up. If two portions of the same component are at different temperatures, the warmer section often becomes the anode and corrodes.

Verification: Verification is expected to be achieved through the following:

Verif. Method	Verif. By	Plan	Notes/Comments
A	ENG	Perform an analysis to verify where galvanic corrosion protection is required in the RLD system.	
R	ENG	Review the design to verify that the RLD system is provided with galvanic corrosion protection, where required.	

3.4.1.2.2.11 Corrosion Allowance for Airlink Piping

Requirement: The RLD system corrosion allowance for airlink piping shall be in accordance with Table 3-2, below. [Section 18.7.1.1, BOD]

Table 3-2 Corrosion Allowance for Airlink Piping

Design Configuration	Corrosion Allowance
Airlinks external to vessel	40 mils (0.04in)/1 mpy
Airlinks internal to vessel	80 mils (0.08in)/ 2 mpy

Basis Discussion: Airlink piping is piping between the pulse jet mixer (PJM) or Reverse Flow Diverter and the Jet Pump Pair (JPP). These values already include the general corrosion wear rate in 3.4.1.2.2.2. Therefore, an additional corrosion allowance is not required to be added to the Table 3-2 values. The 80 mils corrosion allowance for airlinks internal to the vessel only applies on wetted surfaces of the piping.

Verification: Verification is expected to be achieved through the following:

Verif. Method	Verif. By	Plan	Notes/Comments
R	ENG	Review the design to verify that the RLD system corrosion allowance for airlink piping is in accordance with Table 3-2.	

3.4.1.2.2.12 Passivation of Stainless Steel

Requirement: The RLD system shall include provisions for the addition of chemicals to promote re-passivation after or during liquid transfers. The RLD system shall be designed to be chemically cleaned, descaled, and re-passivated. [Section 18.6.5, BOD]

Basis Discussion: Stainless steels exhibit a stable passive oxide film capable of protecting the underlying surface from corrosion. Stainless steel passive oxide films form naturally on the metal surface. Passive oxide film consists of iron, chromium, nickel, and oxygen and minor constituents include molybdenum and manganese. The oxide covers the surface and is tightly adherent and creates a barrier thereby reducing the corrosion rate of the base metal. A characteristic of the passive oxide film is to spontaneously reform when scratched. The passive oxide film acts as a barrier to slow diffusion and reduce corrosion reaction rates.

Verification: Verification is expected to be achieved through the following:

Verif. Method	Verif. By	Plan	Notes/Comments
R	ENG	Review the design to verify that the RLD system includes provisions for the addition of chemicals to promote re-passivation after or during liquid transfers and that the system is designed to be chemically cleaned, descaled, and re-passivated.	

3.4.1.2.2.13 Synergy Effects

Requirement: If the velocity in RLD system PJM vessels is within 4-6 m/s, the design shall include an additional allowance for synergy effects as determined by Section 18.7.2.1 of the BOD. If the velocity in RLD system piping and non-PJM vessels is within 4-6 m/s, the design shall use a velocity greater than 6 m/s to preclude the use of an additional allowance for synergy effects. [Section 18.8.1, BOD]

Basis Discussion: The synergistic effects of erosion and corrosion are required to be evaluated in the design of piping and vessels. At velocities less than 4m/s, corrosion is the dominant wear mechanism and at velocities greater than 6 m/s, erosion is the dominant wear mechanism. The synergistic region exists between 4-6 m/s.

Verification: Verification is expected to be achieved through the following:

Verif. Method	Verif. By	Plan	Notes/Comments
A	ENG	Perform an analysis to verify the RLD system vessel (both PJM and non-PJM) and piping velocities.	
R	ENG	Review the design of the RLD system to verify that PJM vessels include a localized erosion allowance as determined by Section 18.7.2.1 of the BOD if the velocity is within 4-6 m/s and that piping and non-PJM vessels use a velocity greater than 6 m/s if the velocity is within 4-6 m/s.	

3.4.1.2.2.14 General Erosion Wear Rate in Piping

Requirement: The RLD system corrosion allowance for piping shall include an erosion wear rate in accordance with Table 3-3, below. Wear rates for piping operating outside the bounds of this table shall be justified by analysis. [Section 18.7.1, BOD]

Table 3-3 Erosion Wear Rates for Piping Design

Velocity	Solids	Erosion Wear Rate
≤12 ft/s	0-2 wt%	16 mils (0.016in)/0.4 mpy
≤12 ft/s	> 2 - 27.3 wt%	70 mils (0.07in)/1.75 mpy

Basis Discussion: General erosion wear rates are provided in the BOD for stainless steel and high nickel alloy piping dependent on velocity and solids concentration. The basis for Table 3-3 is provided in 24590-WTP-M0C-50-00019, *Total Corrosion Allowances for WTP Stainless Steel and High-Alloy Piping Systems*.

Verification: Verification is expected to be achieved through the following:

Verif. Method	Verif. By	Plan	Notes/Comments
A	ENG	Perform an analysis to verify the velocity and solids content in the RLD system process stream. If the analysis determines that the piping operates outside the bounds of Table 3-3, perform an additional analysis to verify the acceptable erosion wear rate for the piping.	
R	ENG	Review the design to verify that the RLD system corrosion allowance for piping includes an erosion wear rate in accordance with Table 3-3 or the preceding analysis, depending on the velocity and solids content of the process stream.	

3.4.1.2.2.15 General Erosion Wear Rate for Vessels

Requirement: The RLD system corrosion allowance for vessels shall include an erosion wear rate in accordance with Table 3-4, below. Wear rates for vessels operating outside the bounds of this table shall be justified by analysis. [Section 18.7.2, BOD]

Table 3-4 Erosion Wear Rates for Vessel Design

Velocity	Solids	Erosion Wear Rate
≤12 ft/s	0-2 wt%	4 mils (0.04in)/0.1 mpy
≤12 ft/s	> 2 - 27.3 wt%	16 mils (0.016in)/ 0.4 mpy

Basis Discussion: General erosion wear rates are provided in the BOD for stainless steel and high nickel alloy vessels dependent on velocity and solids concentration. The basis for Table 3-4 is provided in 24590-WTP-M0C-50-00004, *Wear Allowance for WTP Waste Slurry Systems*.

Verification: Verification is expected to be achieved through the following:

Verif. Method	Verif. By	Plan	Notes/Comments
A	ENG	Perform an analysis to verify the velocity and solids content in the RLD system process stream. If the analysis determines that the vessel operates outside the bounds of Table 3-4, perform an additional analysis to verify the acceptable erosion wear rate for the vessel.	
R	ENG	Review the design to verify that the RLD system corrosion allowance for vessels includes an erosion wear rate in accordance with Table 3-4 or the preceding analysis, depending on the velocity and solids content of the process stream.	

3.4.1.2.2.16 Localized Erosion Allowance for PJM-Mixed Vessel Bottom Heads

Requirement: The RLD system corrosion allowance for PJM-mixed vessels shall include a localized erosion allowance for the bottom heads determined using Equation 1 in Section 18.7.2.1.1 of the BOD, in conjunction with the scar depth rate in Table 18-7 of the BOD. [Sections 18.7.2.1, 18.7.2.1.1, BOD]

Basis Discussion: The scar depth rate (SDR) for PJM mixed vessel bottom heads and PJM nozzles is determined based upon a given vessel's maximum suspended solids concentration and material of construction. The basis for these requirements is provided in 24590-WTP-M0C-50-00020, *Localized Erosion Wear Allowances for WTP PJM Vessels*.

Verification: Verification is expected to be achieved through the following:

Verif. Method	Verif. By	Plan	Notes/Comments
A	ENG	Perform an analysis to verify the RLD system localized erosion allowance for the bottom heads of PJM-mixed vessels using Equation 1 in Section 18.7.2.1.1 of the BOD in conjunction with the scar depth rate in Table 18-7 of the BOD.	
R	ENG	Review the design to verify that the RLD system corrosion allowance for PJM-mixed vessels includes a localized erosion allowance for the bottom heads consistent with the results of the analysis.	

3.4.1.2.2.17 Localized Erosion Allowance for PJM Nozzles

Requirement: The RLD system corrosion allowance for PJM nozzles shall include a localized erosion allowance determined using Equation 2 in Section 18.7.2.1.2 of the BOD, in conjunction with the scar depth rate in Table 18-7 of the BOD. [Sections 18.7.2.1, 18.7.2.1.2, 18.7.2.1.2.1, 18.7.2.1.2.2, BOD]

Basis Discussion: The wear in PJM nozzles is evaluated as two distinct period of operation (erosion during PJM drive and erosion during PJM suction).

Verification: Verification is expected to be achieved through the following:

Verif. Method	Verif. By	Plan	Notes/Comments
A	ENG	Perform an analysis to verify the RLD system localized erosion allowance for PJM nozzles using Equation 2 in Section 18.7.2.1.2 of the BOD in conjunction with the scar depth rate in Table 18-7 of the BOD.	
R	ENG	Review the design to verify that the RLD system corrosion allowance for PJM nozzles includes a localized erosion allowance consistent with the results of the analysis.	

3.4.1.2.2.18 Fretting/Wear

Requirement: Where fretting or wear is a potential issue in the RLD system, an appropriate additional corrosion allowance shall be added. [Section 11.9.1.2, BOD]

Basis Discussion: An example of a configuration where fretting or wear is a potential issue is when pipes pass through baffle plates.

Verification: Verification is expected to be achieved through the following:

Verif. Method	Verif. By	Plan	Notes/Comments
A	ENG	Perform an analysis to verify where fretting or wear is a potential issue in the RLD system.	
R	ENG	Review the design to verify that an appropriate additional corrosion allowance is added where fretting or wear is a potential issue.	

3.4.1.2.2.19 Galling of Moving Surfaces

Requirement: Where galling could occur in the RLD system, a material grade which is less susceptible to galling shall be used for at least one of the components, or the use of dry lubricants or metallic coatings shall be used. [Section 11.9.1.1, BOD]

Basis Discussion: An example of a material grade that is less susceptible to galling is UNS S21800.

Verification: Verification is expected to be achieved through the following:

Verif. Method	Verif. By	Plan	Notes/Comments
A	ENG	Perform an analysis to verify where galling could occur in the RLD system.	
R	ENG	Review the design to verify that the RLD system uses a material grade which is less susceptible to galling, dry lubricants, or metallic coatings where the analysis determines that galling could occur within the system.	

3.4.1.2.2.20 Cavitation Damage

Requirement: The RLD system pumping systems and agitators shall be designed to minimize cavitation. [Section 18.8.10, BOD]

Basis Discussion: Cavitation is caused by the formation and collapse of vapor bubbles in a liquid near a metal surface. The possibility for cavitation damage exists in high velocity fluids, such as those found in fluidic devices or centrifugal pumps.

Verification: Verification is expected to be achieved through the following:

Verif. Method	Verif. By	Plan	Notes/Comments
A	ENG	Perform an analysis to verify where cavitation is a concern in the RLD system.	
R	ENG	Review the design to verify that the RLD system pumping systems and agitators are designed to minimize cavitation where it is determined to be applicable in the analysis.	

3.4.1.2.2.21 Creep

Requirement: The RLD system high temperature vessels and piping shall be designed to allow for creep over the life of the component. [Section 18.8.11, BOD]

Basis Discussion: Creep is the continuous increasing deformation of a material over time under a constant load. It is only experienced in structures, systems, and components operating at high temperatures.

Verification: Verification is expected to be achieved through the following:

Verif. Method	Verif. By	Plan	Notes/Comments
A	ENG	Perform an analysis of the RLD system vessels and piping to verify the expected operating temperature of the component.	
R	ENG	Review the design to verify that high temperature vessels and piping are designed to allow for creep over the life of the component.	

3.4.1.2.3 ~~Nonmaintainable~~ Soft or Nonmetallic Parts

Requirement: The ~~HLW~~ RLD system equipment and components located in black cells and hard-to-reach areas shall be designed with no non-removable soft or nonmetallic parts that could be affected by the total integrated radiation dose, including gamma and beta. [Section 16.4.1.1, BOD] ~~[Section 20, ORD]~~

Basis Discussion: Soft or nonmetallic parts can be affected by radiation and lose their capability to perform in this environment.

~~This is an ALARA impacting requirement because if components fail, they will have to be replaced and may result in dose to personnel or contamination issues.~~
[ALARA]

Verification: Verification is expected to be achieved through the following:

Verif. Method	Verif. By	Plan	Notes/Comments
A	**ENG**	Perform an analysis to ~~determine~~ verify the total integrated radiation dose (including gamma and beta) to ~~nonremovable soft or nonmetallic parts~~RLD system equipment and components within black cells and hard-to-reach areas.	
R	**ENG**	Review the design to verify that RLD system equipment and components located in black cells and hard-to-reach areas do not contain non-removable soft or non-metallic parts that could be affected by the total integrated radiation dose (including gamma and beta) determined in the analysis. ~~Review the following:~~ ~~- Review design to verify that the total integrated dose input is in conformance with the analysis~~ ~~- Review equipment datasheets to confirm design requirements for non-safety equipment are documented~~ ~~- Review supplier-provided certified material test reports or equivalent (i.e., soft parts that provide a containment or confinement boundary).~~	~~May be documented in an assessment/evaluation.~~

3.4.1.2.4 ~~Room Environment Conditions for Non-safety SSCs~~Deleted

~~**Requirement**: The HLW-RLD non-safety equipment and components shall be designed to operate and withstand the internal environment conditions of the HLW Facility. [Section 12, Table 12-1, BOD] [Section 11.16, 14.8, 14.15, 16.1, ORD]~~

~~**Basis Discussion**: Non-safety structures, systems and components (SSC) are designed to function as intended in the room environment conditions associated with their location.~~

~~**Verification**: Verification is expected to be achieved through the following:~~

~~Verif. Method~~	~~Verif. By~~	~~Plan~~	~~Notes/Comments~~
~~**R**~~	~~**ENG**~~	~~Review design of non-safety SSCs to verify compliance with BOD Table 12-1 conditions.~~	

3.4.1.2.5 Room Environment Conditions for Safety SSCs

Requirement: ~~The safety SSCs in the HLW-RLD system credited with a safety function and post accident monitoring instruments (24590-HLW-RPT-ENS-12-002, HLW Preliminary Post-Accident Monitoring Report) shall be designed to operate and withstand the most severe environmental conditions identified for the room in which they are installed, inclusive of aging effects throughout their qualified life.~~The safety SSCs in the RLD system shall be designed and qualified to function as intended in the environments associated with the events for which they are intended to respond. Environmental qualification shall be to IEEE 323-83. The effects of aging on normal and abnormal functioning shall be considered in design and qualification using IEEE 323-83. [Safety Criterion 4.1-3, Safety Criterion 4.4-1, SRD] [Section 11.7.3, BOD]

Basis discussion: Safety SSCs, designated as safety class (SC) or safety significant (SS), are designed and qualified to perform their safety function. ~~as intended in the room environment conditions associated with the events for which they are intended to respond. The effects of aging on normal and abnormal functioning are considered in design and qualification. HLW Room Environment Data Sheet,~~ 24590-HLW-U0D-W16T-00001, *HLW Room Environment Data* Sheet, identifies environmental conditions for rooms that house safety SSCs.

Verification: Verification is expected to be achieved through the following:

Verif. Method	Verif. By	Plan	Notes/Comments
A/T	**ENG /SUP**	Perform an analysis or supplier testing to verify the ability of the SSCs credited with a safety function to withstand the environmental conditions for which they are intended to respond. ~~Perform analysis or testing to verify the ability of the SSCs credited with a safety function and post accident monitoring to withstand specified environmental conditions.~~	~~Document in equipment qualification package. See HLW Room Environment Data Sheet, 24590-HLW-U0D-W16T-00001, for room environment conditions.~~
R	**ENG**	Review the design to verify that safety SSCs are environmentally qualified to IEEE 323-83 inclusive of the effects of aging on normal and abnormal functioning.	
~~**R**~~	~~**ENG**~~	~~Review the design to verify conformance to the as-tested or as-analyzed configuration.~~	~~Document in an evaluation/assessment or EQP~~

3.4.1.3 ~~Seismic Design~~ Moved to 3.4.2.4

~~**Requirement**: The HLW-RLD system equipment, including PAM, shall be designed and qualified for seismic conditions in accordance with Table 3-2 below:~~

~~**Table 3-2 HLW-Radioactive Liquid Waste Disposal System Seismic Design Categories**~~

~~**Description**~~	~~**Seismic Category**~~	~~**Reference**~~
~~Piping of overflow lines on manifolds that connect to C3 and C5 area sumps~~	~~SC-III~~	~~[Section 4.4.29, PDSA-HLW FACILITY]~~
~~RLD and PVV bulge confinement assembly drain lines~~	~~SC-III~~	~~[Section 4.4.31, PDSA-HLW Facility]~~
~~RLD vessels located in black cells or hard-to-reach areas (e.g., RLD-VSL-00002, -00007, -00008)~~	~~SC-I~~	~~[Section 16.4.2.1, BOD]~~
~~RLD piping located in black cells~~	~~SC-I~~	~~[Section 16.4.2.7, BOD]~~

~~**Basis Discussion**: Section 2.4.12 of 24590-WTP-PSAR-ESH-01-002-01, *Preliminary Documented Safety Analysis to Support Construction Authorization; General Information* states the following: "All components and parts of the equipment that provide or contribute to the safety functions and accident monitoring functions, including equipment supports and anchorage, shall be qualified accordingly." This qualification ensures SSCs meet the designated seismic design requirements. The SRD, Safety Criterion 4.1-3 details the equivalence of the WTP seismic category to the seismic performance category of DOE-STD-1020-94, *Natural Phenomena Hazards Design and Evaluation Criteria for Department of Energy Facilities*. The SRD also states that SSCs designated as safety SSCs be designed to withstand the effects of NPH events (e.g., earthquakes, wind, and floods) without loss of capability to perform specified safety functions.~~

~~Piping and vessels listed in BOD, Appendix B are allowed to be designed for the WTP Site-Specific Ground Motion (WSGM).~~

~~**Verification**: Verification is expected to be achieved through the following:~~

~~Verif. Method~~	~~Verif. By~~	~~Plan~~	~~Notes/Comments~~
~~A/T~~	~~ENG/SUP~~	~~Analysis or test performed on equipment listed in Table 3-2 to demonstrate capability to withstand seismic event.~~	~~This is expected to be documented in the equipment qualification packages.~~
~~R~~	~~ENG~~	~~Review design to verify conformance to the as-tested/as-analyzed configuration.~~	~~May be accomplished by equipment qualification packages or separate assessment.~~

3.4.1.4 ~~Redundancy in the HLW-Radioactive Liquid Waste Disposal System~~Moved to 3.4.1.2.1.1

~~**Requirement**: The HLW-RLD equipment and components located in closed cell and/or hard-to-reach areas shall have redundant capabilities as necessary to achieve a 40-year design life (see Table 3-3). [Sections 11.3.2, 11.4.2, 16.4.1.1, BOD] [Section 14.1, ORD]~~

~~**Table 3-3 HLW-Radioactive Liquid Waste Disposal System Equipment/Components Redundancy**~~

~~Equipment/Component Description~~	~~Redundancy Required?~~
~~PJMs~~	~~No~~
~~Centrifugal sample/transfer pumps~~	~~No~~
~~Instruments~~	~~No~~
~~Steam ejectors for HLW-RLD-VSL-00002~~	~~Yes~~
~~Steam ejectors for sumps HOP-SUMP-00003, HOP-SUMP-00008, HCP-SUMP-00001, and RLD-SUMP-00001~~	~~Yes~~
~~Manifold overflow feature~~	~~No~~
~~Transfer pipes~~	~~No~~

~~**Basis Discussion**: This requirement is decomposed for the BOD and 24590-WTP-RPT-OP-01-001, *Operations Requirements Document* (ORD) requirement to provide redundancy. The steam ejectors in HLW-RLD-VSL-00002 provide redundancy for discharge path transfer to either RLD-VSL-00007 or RLD-VSL-00008. The steam ejectors for the following sumps provide redundancy as follows: (1) HOP-SUMP-00003, HOP-SUMP-00008, and HCP-SUMP-00001 for transfer of effluent to HFP-VSL-00001, (2) RLD-SUMP-00001 provide redundancy for transfer of effluent to RLD-VSL-00008. [ALARA]~~

~~**Verification**: Verification is expected to be achieved through the following:~~

~~Verif. Method~~	~~Verif. By~~	~~Plan~~	~~Notes/Comments~~
~~R~~	~~ENG~~	~~Review the system design for incorporation of the required redundancy features.~~	~~May be documented in an assessment/evaluation.~~

3.4.2 Nuclear Safety, ALARA, Environmental and Other Regulatory Requirements

3.4.2.1 Safety ~~Designations~~ Classifications

Requirement: The following ~~HLW~~ RLD system SSCs shall be ~~designated~~ classified as safety SSCs in accordance with Table 3-5~~4~~ below: [Sections 4.4.1.4.1, 4.4.11.1.1, Appendix M, HLW PDSA]

Table 3-5 ~~HLW~~ RLD ~~s~~System Safety ~~Designation~~Classifications

Equipment/Component Description	Safety Function	Safety ~~Designation~~ Classification	References ~~Safety Classification~~
~~RLD-VSL-00007 and RLD-VSL-00008~~	~~Mitigate the consequences of the release of radioactive and chemically hazardous offgas by maintaining confinement (in support of the HOP/PVV confinement function).~~	~~SS~~	~~[Section 4.4.16.4, PDSA-HLW Facility]~~
~~RLD-VSL-00007 and RLD-VSL-00008 interfacing SSCs that perform confinement boundary functions.~~	~~Mitigate the consequences of the release of radioactive and chemically hazardous offgas by maintaining confinement (in support of the HOP/PVV confinement function).~~	~~SS~~	~~[Section 4.4.16.4, PDSA-HLW Facility]~~
~~Overflow lines on manifolds that connect to C3 and C5 area sumps~~	~~Provision of an overflow line reduces the probability of an internal/external dose to facility worker by preventing backflow to C3 areas from C5 areas in the event of a transfer line blockage to the RLD vessel downstream of the manifold.~~	~~SS~~	~~[Section 4.4.29, PDSA-HLW Facility]~~
~~RLD and PVV bulge confinement assembly drain lines~~	~~Mitigates the consequence of a release of radioactive and chemically hazardous material by providing confinement and shielding (confinement boundary includes drain).~~	~~SS~~	~~[Section 4.4.31, PDSA-HLW Facility]~~
~~RLD transfer pump (remotely actuated) flushing supply valves~~	~~Reduce the probability of direct radiation exposure to the facility worker (flush interlock with sampling pumps). Valve position indication initiates interlock.~~	~~SS~~	~~[Section 4.4.19, PDSA-HLW Facility]~~
Joggles/Offsets	The C5/R5 confinement boundary mitigates the direct exposure consequences from a release of radioactive material.	SS	Section 4.4.1.4.1, Appendix M, HLW PDSA

Equipment/Component Description	Safety Function	Safety ~~Designation~~ Classification	References~~ Safety Classification~~
RLD bulge and drain	Mitigates the consequences of a release of radioactive and chemically hazardous material by providing secondary confinement and drain path.	SS	Section 4.4.11.1.1, Appendix M, HLW PDSA

Basis Discussion: ~~None~~The bulge confinement assembly (enclosure), including the drain to the wet process cell, maintains confinement of process liquids.

Verification: Verification is expected to be achieved through the following:

Verif. Method	Verif. By	Plan	Notes/Comments
R	ENG	Review the design to verify the RLD system components listed in Table 3-5 are classified as SS.~~Verify that the safety designation and function, as established in the PDSA/DSA, are correctly reflected in the equipment qualification datasheet and supporting document in the equipment qualification package.~~	~~May be accomplished by EQP and/or Design Verification Report (DVR) to align with the PDSA/Documented Safety Analysis.~~

3.4.2.2 ~~DWP~~ Tank System Secondary Containment ~~Requirements – Ancillary Equipment~~

Requirement: ~~The HLW-RLD ancillary equipment located in plant areas that do not provide secondary containment (as documented in 24590-HLW-RPT-ENV-09-001, Dangerous Waste Permit Secondary Containment Requirements for HLW Facility) shall be provided with secondary containment (e.g., coaxial piping). [Section 14.10.1.3, BOD]~~The portions of the RLD system regulated as tank systems and ancillary equipment shall be designed with secondary containment, except for those portions of the system that serve as secondary containment (WAC 173-303-640[4][d][i] through [iv]). [Section III.10.C.16.a, DWP] [Sections 11.6.9, 14.10.1.2, 14.10.1.3, BOD]

Basis Discussion: ~~Secondary containment design requirements are specified in 24590-HLW-RPT-ENV-09-001, *Dangerous Waste Permit Secondary Containment Requirements for HLW Facility* and 24590-HLW-3ZD-30-00001, *HLW Facility Design Description*.~~Tank systems in the HLW Facility are subject to the requirements of the Washington Administrative Code. Examples of secondary containment for tank systems include liners, vaults, double-walled tanks, and other Ecology-approved devices. Ancillary equipment means any device (e.g., piping, fittings, flanges, valves, and pumps) used to distribute, meter, or control the flow of dangerous waste from its point of generation to a tank system, between dangerous waste storage tanks, or to a point of disposal or shipment offsite. Examples of secondary containment for ancillary equipment includes trench jacketing and coaxial piping.

Verification: Verification is expected to be achieved through the following:

Verif. Method	Verif. By	Plan	Notes/Comments
R	ENG	Review the design to verify portions of the RLD system regulated as tank systems and ancillary equipment are provided with secondary containment.~~Review design to ensure secondary containment is provided in conformance with 24590-HLW-RPT-ENV-09-001.~~	~~May be documented in an evaluation/assessment. Environmental group to participate in or review evaluation/assessment.~~

3.4.2.3 Tank System Vapor Confinement

Requirement: The portions of the RLD system regulated as tank systems shall be designed to prevent the escape of vapors, fumes, or other emissions into the air if the tank holds materials that are acutely or chronically toxic by inhalation (WAC 173-303-640[5][e]). [Section 14.10.1, BOD]

Basis Discussion: Tank systems in the HLW Facility are subject to the requirements of the Washington Administrative Code.

Verification: Verification is expected to be achieved through the following:

Verif. Method	Verif. By	Plan	Notes/Comments
R	ENG	Review the design to verify portions of the RLD system regulated as tank systems are designed to prevent the escape of vapors, fumes, or other emissions into the air if the tank holds materials that are acutely or chronically toxic by inhalation.	

3.4.2.4 Seismic Design

Requirement: The RLD system equipment shall be designed and qualified for seismic conditions in accordance with Table 3-6, below. This equipment shall be designed using revised ground motion (RGM) or WTP Site-Specific Ground Motion (WSGM). [Appendix M, HLW PDSA] [Sections 4.4.1, 16.4.2.1, 16.4.2.7, Appendix B, BOD]

Table 3-6 RLD System Seismic Design Categories

Description	Seismic Category	Reference
RLD bulges and bulge drain lines	SC-III	Appendix M, HLW PDSA
Joggles/Offsets	SC-III	Appendix M, HLW PDSA
RLD vessels located in black cells or hard-to-reach areas	SC-I	Section 16.4.2.1, BOD
RLD piping located in black cells	SC-I	Section 16.4.2.7, BOD

Basis Discussion: Section 2.4.12 of 24590-WTP-PSAR-ESH-01-002-01, *Preliminary Documented Safety Analysis to Support Construction Authorization; General Information* states the following: "All components and parts of the equipment that provide or contribute to the safety functions and accident monitoring functions, including equipment supports and anchorage, shall be qualified accordingly." This qualification ensures SSCs meet the designated seismic design requirements. The SRD, Safety Criterion 4.1-3 details the equivalence of the WTP seismic category to the seismic performance category of DOE-STD-1020-94, *Natural Phenomena Hazards Design and Evaluation Criteria for Department of Energy Facilities*. The SRD also states that SSCs designated as safety SSCs be designed to withstand the effects of NPH events (e.g., earthquakes, wind, and floods) without loss of capability to perform specified safety functions.

Verification: Verification is expected to be achieved through the following:

Verif. Method	Verif. By	Plan	Notes/Comments
A/T	ENG /SUP	Perform an analysis or supplier testing on equipment listed in Table 3-6 to demonstrate the capability to withstand a seismic event.	

Verif. Method	Verif. By	Plan	Notes/Comments
R	ENG	Review the design to verify conformance to the as-tested/as-analyzed configuration.	

3.4.2.5 Seismic Design for Interaction Effects

Requirement: Interaction effects shall be considered when determining the seismic category of individual items and, where an adverse seismic interaction with SC or SS components exists, adequate measures shall be taken to preclude the adverse interaction. The RLD system shall use either RGM or WSGM for evaluating seismic interactions between SC-III/SC-IV sources and SC-I and SC-II targets. [Section 10.2.15, Appendix B, BOD] [Criterion 4.1-3, SRD]

Basis Discussion: Equipment that is non-safety may be identified as having a potential for adverse interaction with safety equipment during a seismic event in accordance with 24590-WTP-GPG-ENG-033, *Evaluation for Seismic Interaction Effects*. Where a resolution strategy is selected to increase the seismic category of the source SSC to protect the safety (target) SSC, the resulting seismic category of the equipment may be greater than SC-IV. In those cases, the equipment design is verified to meet the higher seismic performance category such that the target SSC is protected.

Verification: Verification is expected to be achieved through the following:

Verif. Method	Verif. By	Plan	Notes/Comments
A/T	ENG /SUP	Perform an analysis or supplier testing performed on SSCs to demonstrate the ability to withstand the seismic loadings for their respective seismic categories to the extent necessary to prevent interactions.	Documented in an equipment seismic qualification review or supplier seismic design report.
R	ENG	Review design of the RLD system to verify seismic categorization of equipment based on interaction effects per 24590-WTP-GPG-ENG-033.	

3.4.2.6 Bulge Confinement Design

Requirement: The RLD system bulge confinement assembly, including the drain to the WCP, shall maintain confinement of liquid up to the height of the HEPA filter inbleed line nozzle. [Sections 4.4.11.1.3, 4.4.11.1.4, Appendix M, HLW PDSA]

Basis Discussion: The RLD system bulge drain supports the functional requirement of collecting, confining, and draining liquid spills and sprays resulting from a loss of primary confinement.

Verification: Verification is expected to be achieved through the following:

Verif. Method	Verif. By	Plan	Notes/Comments
A	ENG	Perform an analysis to verify the RLD system bulge confinement assemblies are sized to maintain confinement of liquid up to the height of the HEPA filter inbleed line nozzle.	
R	ENG	Review the design of the RLD system bulge confinement assemblies to verify they maintain confinement of liquid up to the height of the HEPA filter inbleed line nozzle.	

3.4.3 System Interface Requirements

~~The effluent sources interfacing with the HLW-RLD are from the HLW Facility C3/C5 sumps, the waste neutralization vessel (HDH-VSL-00003), the decontamination tank melter cave 1 and 2 (HSH-TK-00001/00002), and submerged bed scrubbers (HOP-SCB-00001/00002). The system also receives drains from HOP high efficiency mist eliminator (HEME) offgas, PCW system cooling loops blowdown, decon booth/glove box, pulse jet ventilation (PJV) system header drain lines, and PCW drains. The boundary limits of the HLW-RLD are dependent on system interactions. The boundary limits with the HDH, HOP, HSH, and PJV systems start from the nozzle connections on the HLW-RLD collection vessels.~~

~~All other boundaries between the HLW-RLD and other systems are defined based on their type of control. The boundaries for controlled processes are at the control valve. Specific system interfaces are discussed in the subsequent requirement sections titled "System Interface Requirements."~~

3.4.3.1 ~~Non-Safety ISA Interface~~Deleted

~~**Requirement:** The HLW-RLD shall receive sufficient instrument air to operate all air-operated devices expected to be operating simultaneously during normal plant operations. [Section 6.4, BOD] (E.2)~~

~~**Basis Discussion:** Air consumption rates and frequency for HWL-RLD air-operated devices are identified and used as input to determine ISA system capacity. Instrument air temperature and dew point requirements are covered under the ISA SDD.~~

~~**Verification:** Verification is expected to be achieved through:~~

~~Verif. Method~~	~~Verif. By~~	~~Plan~~	~~Notes/Comments~~
~~A~~	~~ENG~~	~~Verify through collective system-level analysis that the ISA system and interfaces with HLW-RLD are designed with sufficient capacity to operate all HLW-RLD air-operated devices expected to be operating simultaneously during normal plant operations.~~	
~~R~~	~~ENG~~	~~Review design to verify conformance to the results of the analysis.~~	~~May be documented in an assessment/evaluation.~~

3.4.3.2 ~~Non-Safety LVE Interface~~Deleted

~~**Requirement:** The HLW-RLD shall receive non-safety LVE power for operation of all components. (E.1)~~

~~**Basis Discussion:** None.~~

~~**Verification:** Verification is expected to be achieved through the following:~~

~~Verif Method~~	~~Verif. By~~	~~Plan~~	~~Notes/Comments~~
~~A~~	~~ENG~~	~~Verify by analysis that the non-safety LVE system capacity supports HLW-RLD system equipment operation.~~	
~~R~~	~~ENG~~	~~Review the design to verify that non-safety SSCs are provided with power from non-safety LVE.~~	

3.4.4 Other Technical, Specialty, Operations and Maintenance Requirements

3.4.4.1 ~~Hydraulic Seals~~Deleted

~~**Requirement**: Hydraulic seals shall be implemented in the HLW-RLD design to prevent inflow of air into the PVV, PJV or HOP systems. (C.1.3.2)~~

~~**Basis Discussion**: The hydraulic seals are needed to prevent inflow of air into the PVV, PJV, or HOP systems.~~

~~For proper operation, hydraulic seals will be filled during startup operations. The HLW-RLD-VSL-00002 will be filled with DIW via PWD-RK-00032 until the PJV drain line, offgas drain lines, and dipped overflow line are all submerged to provide a pressure boundary between the offgas ventilation systems (PJV and HOP offgas) and the black cell (room H-B014).~~

~~The overflow loop seal between HLW-RLD-VSL-00007, RLD-VSL-00008, and HCP-SUMP-00001 will be filled with DIW via PWD-RK-00032 with sufficient water to form a hydraulic seal to prevent black cell air from entering the vessels' headspace. The overflow loop seal is equipped with level instrumentation. [ALARA]~~

~~**Verification**: Verification is expected to be achieved through the following:~~

~~Verif. Method~~	~~Verif. By~~	~~Plan~~	~~Notes/Comments~~
~~R~~	~~ENG~~	~~Review design to verify that hydraulic seals are included in the design.~~	

3.4.4.2 Provisions for ~~Extra Nozzles, Branches, or Spools~~Startup and Commissioning

Requirement: The design of the RLD system shall ~~accommodate~~ include provisions as necessary to support startup and commissioning testing. [Section 11.4.7, BOD] [Section 19.12, ORD]

Basis Discussion: Additional nozzles, branch lines, removable spools or other provisions that may be needed to support identified testing are to be accommodated in the design as jointly determined by the design agency, startup and commissioning during the design development and review process, with consideration given to the tests and demonstration activities required for requirement verification specified in Appendix A. This may include, but is not limited to, provisions to support the introduction or removal of fluids, gases, reagents, or simulants; or the availability of special test ports, sampling ports, or temporary instruments or instrument lines.

Verification: Verification is expected to be achieved through the following:

Verif. Method	Verif. By	Plan	Notes/Comments
R	ENG	Review the design to verify the requirement is met based on established tests/demonstrations to be performed during startup and commissioning. ~~Perform an assessment to document the review.~~	~~Startup and commissioning to participate in assessment led by design agency.~~

3.4.4.3 ~~Isolation and Test Points~~Moved to 3.6.1.1.9

~~**Requirement**: Isolation and test points with drain/bleed valves shall be included in the HLW-RLD design to allow for testing of plant items during normal operations and removal or replacement as applicable.[Section 11.5.1, BOD] [Sections 9.1, 14.13, 19.12, ORD]~~

~~**Basis Discussion**: None.~~

~~**Verification**: Verification is expected to be achieved through the following:~~

~~Verif. Method~~	~~Verif. By~~	~~Plan~~	~~Notes/Comments~~
~~R~~	~~ENG~~	~~Review applicable HLW-RLD P&IDs to verify that isolation and test points with drain/bleed valves are included into the design to allow for testing of equipment during normal operations.~~	

3.4.4.4 Remotely Maintainable or Replaceable Equipment and Components

Requirement: ~~The HLW-RLD maintainable or replaceable equipment and components (i.e., not located in black cells or hard-to-reach areas) shall be designed with remote handling features to be removed and reinstalled in accordance with Table 3-5 below or be located in accessible areas (e.g., bulges). [Sections 5.2, 7.1, 8.1.3, 9.1, 10.4, 14.1, 14.8, ORD] [Sections 9.4.2, 11.3.1, 11.3.2, 11.3.2.2, 11.4.1, 11.8.3.1, BOD]~~RLD system equipment and instruments in remotely maintained areas (not including black cells) shall be designed to be remotely removable, replaceable, and maintainable to achieve a 40-year design life. [Section 5.2, ORD] [Section 11.4.1, BOD]

Table 3-7 ~~**Remotely Maintainable or Replaceable Equipment and Components**~~**Deleted**

~~Equipment/Component Description~~	~~Remotely Removable and Replaceable~~
~~Vessels RLD-VSL-00002/00007/00008~~	~~No~~
~~PJMs~~	~~No~~
~~Jet pump pairs~~	~~No~~
~~RLD sample/transfer pumps[1]~~	~~No~~
~~Jumpers~~	~~Yes~~
~~Instruments~~	~~No~~
~~Breakpots~~	~~No~~
~~Sump~~	~~No~~
~~Sump diaphragm pumps~~	~~No~~
~~Sump steam ejectors[2]~~	~~Yes~~
~~Overflow feature~~	~~No~~
~~Transfer pipes~~	~~No~~
~~Valves[1]~~	~~No~~
~~**Notes:**~~ ~~1. Equipment located in bulges.~~ ~~1. Some of the steam ejectors (RLD-EJCTR-00171, RLD-EJCTR-00172, RLD-EJCTR-00178, and RLD-EJCTR-00179) located in sumps that receive effluents from HFP and HSH have jumpers and hence are remotely maintainable. The rest of the steam ejectors are on hard-piping and are not remotely maintainable.~~	

Basis Discussion: ~~Maintenance operations are generally to be performed hands-on in the maintenance shop. In-cave equipment disassembly, removal to maintenance area, and/or replacement is accomplished by local remote handling equipment or by remote handling equipment in dedicated maintenance areas or caves. In general, process systems and equipment within cells or caves that could fail during operations are designed for safe~~

~~recovery, replacement, or redundancy. Equipment or components requiring regular maintenance are located in accessible areas. Remote handling features are provided for equipment or components located in hard to reach areas.~~There should be an engineered method for the removal of equipment from cells, caves, and bulges (except for black cells), taking into consideration containment and radiation control. [ALARA]

Verification: Verification is expected to be achieved through the following:

Verif. Method	Verif. By	Plan	Notes/Comments
R	**ENG**	Review the design of RLD system equipment in remotely maintained areas (not including black cells) to verify it is designed to be remotely removable, replaceable, and maintainable	
~~**A**~~	~~**ENG**~~	~~Confirm using a software program that all replaceable components can be removed without interference.~~	~~Recommend using a software program such as "IGrip" (or similar)~~
~~**T**~~	~~**SU/ COM**~~	~~Verify remotability in accordance with 24590-WTP-RACT-RT-0001, *WTP Remotability Verification Plan*.~~	

3.4.4.5 ~~Remote Valve Operation~~Moved to 3.6.4.5.1

~~**Requirement**: Remote operation shall be provided for valves located where accessibility is difficult, such as R5/C5 areas, and for valves used in routine operations. Valves shall have position indication from directly coupled positioning mechanisms unless other indications are available such as flow, level, and pressure. The indication signal shall be visual, mechanical electric, or electronic based on the valve location and type of valve. [Section 14.4, ORD]~~

~~**Basis Discussion**: Remote operation is used to ensure that the WTP Facility design achieves occupational doses that are ALARA. Valves are equipped with position indicators and reach rods, if necessary, are designed for easy removal and, when reinstalled, only engage the valve in the correct alignment, using no more than two universals. Valves are shown on design drawings and uniquely labeled in accordance with 24590-WTP- 3DP-G03-00044, Standard Component Numbering.~~
~~[ALARA]~~

~~**Verification**: Verification is expected to be achieved through the following:~~

~~Verif. Method~~	~~Verif. By~~	~~Plan~~	~~Notes/Comments~~
~~**R**~~	~~**ENG**~~	~~Review HLW-RLD drawings to verify that remote operation is provided for valves that are located in areas where accessibility is difficult, such as C3/C5 areas.~~	
~~**T**~~	~~**SU/COM**~~	~~Verify remote valve operation to ensure system operation is as designed.~~	

3.4.4.5.1 ~~Remote Valve Operation – Valve Actuator Closure Speed~~Moved to 3.6.4.5.3

~~**Requirement**: Valve actuators of HLW-RLD power-operated valves shall be designed with capability to close at speeds that prevent initiation of a water hammer event during normal operations. [Section 14.4, ORD]~~

~~**Basis Discussion**: None.~~

~~**Verification**: Verification is expected to be achieved through the following:~~

~~Verif. Method~~	~~Verif. By~~	~~Plan~~	~~Notes/Comments~~
~~A~~	~~ENG~~	~~Determine by analysis the maximum speed at which power-operated valve actuators may close to prevent initiation of a water hammer event.~~	
~~R~~	~~ENG~~	~~Review design to verify valve actuators are designed in conformance with the analysis.~~	
~~T~~	~~SU/COM~~	~~Perform operational test to show power-operated valves closes at or below TBD in/s.~~	

3.4.4.6 ~~Maintain Operability – RLD System Partial Outage~~Deleted

~~**Requirement**: The HLW-RLD system shall be designed to maintain the capability to collect and transfer effluents during a partial outage of the system. [Section 14.1, ORD]~~

~~**Basis Discussion**: The RLD system is designed with redundancy to allow maintenance of active equipment (e.g., pumps, power-operated valve actuators).~~

~~**Verification**: Verification is expected to be achieved through the following:~~

~~Verif. Method~~	~~Verif. By~~	~~Plan~~	~~Notes/Comments~~
~~R~~	~~ENG~~	~~Review HLW-RLD design to verify that the system maintains the capability to collect and transfer effluents during a partial outage of the system (e.g., due to maintenance).~~	~~May be documented in an assessment/evaluation.~~

3.4.4.7 ~~Valve Lockout Design~~Moved to 3.6.4.5.5

~~**Requirement**: The HLW-RLD system valves shall be designed/procured, where possible, to support lockout commercially manufactured devices other than chains. [Section 7.1, ORD]~~

~~**Basis Discussion**: None.~~

~~**Verification**: Verification is expected to be achieved through the following:~~

~~Verif. Method~~	~~Verif. By~~	~~Plan~~	~~Notes/Comments~~
~~R~~	~~ENG~~	~~Review HLW-RLD design to verify valves are specified to include design provisions for lockout that do not require the use of chains, where possible.~~	~~May be documented in an assessment/evaluation.~~

3.4.4.8 Decontamination

Requirement: The RLD system equipment subject to decontamination shall be designed to withstand this process without any reduction of functionality through degradation of the electrical, mechanical, or any other components involved. [Section 9.1, ORD]

Basis Discussion: Equipment operating in a contaminated environment is monitored and, if necessary, decontaminated before maintenance. The equipment might be subjected to decontamination agents such as demineralized water, steam, or nitric acid. [ALARA]

Verification: Verification is expected to be achieved through the following:

Verif. Method	Verif. By	Plan	Notes/Comments
R	ENG	Review the RLD system design to verify equipment can withstand decontamination without degradation or reduction in equipment functionality.	

3.4.4.9 Sealed for Life Components

Requirement: Permanently lubricated, sealed for life components shall be used in the RLD system wherever possible in order to reduce maintenance requirements. [Section 9.1, ORD]

Basis Discussion: The use of permanently lubricated, sealed for life components ensures that the need for maintenance is minimized, which supports maintaining facility worker exposure levels ALARA. [ALARA]

Verification: Verification is expected to be achieved through the following:

Verif. Method	Verif. By	Plan	Notes/Comments
R	ENG	Review the design to verify permanently lubricated, sealed for life components are provided in the RLD system wherever possible.	

3.4.4.10 Fail Safe Equipment

Requirement: RLD system in-cell and in-cave equipment shall be designed to fail safely. [Section 11.4.1, BOD] [Section 14.8, ORD]

Basis Discussion: RLD system equipment is designed to fail safe to mitigate potential hazards associated with the failure of the normal control system.

Verification: Verification is expected to be achieved through the following:

Verif. Method	Verif. By	Plan	Notes/Comments
R	ENG	Review the design of the RLD system equipment to verify it is designed to fail to a safe state.	

3.4.4.11 Location of Maintainable Equipment

Requirement: Maintainable equipment components, such as drive motors and valve power actuators, shall be located out of high radiation cave, cell, and bulge areas to the extent practical. [Sections 7.1, 9.1, ORD] [Section 11.4.1, BOD]

Basis Discussion: Equipment and instruments requiring personnel access for maintenance are located in areas where personnel exposures are ALARA. [ALARA]

Verification: Verification is expected to be achieved through the following:

Verif. Method	Verif. By	Plan	Notes/Comments
R	ENG	Review the design of the RLD system to verify that maintainable equipment components are located out of high radiation cave, cell, and bulge areas to the extent practical.	

3.4.4.12 Equipment Location in Bulges

Requirement: RLD system equipment requiring maintenance (such as process isolation valves, pumps, and instruments) that comes into contact with the radioactive process fluids shall be located in bulges. [Sections 10.4, 14.1, ORD] [Section 11.3.2.7, BOD]

Basis Discussion: Bulges are an extension of the process cells and the equipment is contained in a shielded area (R5) with adjacent galleries or corridors of lower radiation level (R2) areas. [ALARA]

Verification: Verification is expected to be achieved through the following:

Verif. Method	Verif. By	Plan	Notes/Comments
R	ENG	Review the design of the RLD system to verify that equipment requiring maintenance that comes into contact with the radioactive process fluids is located in stainless steel bulges.	

3.4.4.13 Bulge Wash Rings and Drains

Requirement: RLD system bulges shall be provided with drains and wash rings to wash-down all areas of the bulge. [Section 10.4, ORD] [Section 11.3.2.7, BOD]

Basis Discussion: Bulges are decontaminated to keep personnel exposure ALARA during maintenance activities. [ALARA]

Verification: Verification is expected to be achieved through the following:

Verif. Method	Verif. By	Plan	Notes/Comments
R	ENG	Review the design of the RLD system bulges to verify drains and wash rings are provided.	

3.4.4.14 Black Cell Welding

Requirement: All-welded construction shall be used for RLD system piping and vessels in black cells and hard to reach areas. There shall be no flanged, socket welded, or threaded connections, except for those approved in Section 16.4.1.1 of the BOD. Socket welds in black cells and hard-to-reach areas shall use a two-to-one weld leg configuration and apply a fatigue strength reduction factor of two in the technical evaluation of the piping. [Sections 11.7.4, 16.4.1.1, BOD]

Basis Discussion: Piping and vessels are designed to provide primary confinement of process solutions.

Verification: Verification is expected to be achieved through the following:

Verif. Method	Verif. By	Plan	Notes/Comments
R	ENG	Review the RLD system welding design (e.g. ISOs) to verify conformance to the requirement.	

3.5 Vessel Requirements

3.5.1 Mission and Functional/Performance Requirements (Including States/Modes)

3.5.1.1 Black Cell/Hard-To-Reach Vessel Design ~~and Operating Conditions~~

3.5.1.1.1 Black Cell/Hard-To-Reach Nozzle Design

Requirement: Nozzles penetrating the primary confinement boundary of ~~HLW~~ RLD system vessels located in black cells or hard-to-reach areas ~~(e.g., RLD-VSL-00002, -00007, -00008, RLD-BRKPT-00004, -00007, -00009)~~ shall be integrally reinforced and attached by full penetration welds. [Section 16.4.2.1, BOD]

Basis Discussion: Using additional reinforcing elements such as reinforcing rings or pads is prohibited. Reinforcing material is to be provided by excess thickness on the shell or head and nozzle neck. Additional reinforcing material may be provided, when required, by increasing the shell head or nozzle thickness, or by providing a thicker insert plate of a suitable diameter, butt welded into the shell or head. If required to accommodate occasional loads, such as the revised ground motion (RGM) accelerations, hydrogen in pipes and ancillary vessels (HPAV) loads or multiple overblow (MOB) loads, in fabricated vessels, reinforcing collars can be used.

Verification: Verification is expected to be achieved through the following:

Verif. Method	Verif. By	Plan	Notes/Comments
R	ENG	Review ~~of~~ the design to verify that the nozzles penetrating the primary confinement boundary of ~~HLW~~ RLD system vessels located in black cells or hard-to-reach areas ~~(e.g., RLD-VSL-00002, -00007, -00008, RLD-BRKPT-00004, -00007, -00009)~~ are integrally reinforced and attached by full penetration welds.	~~May be documented in an assessment/evaluation.~~

3.5.1.1.2 Black Cell/Hard-To-Reach Minimum Design Pressure

Requirement: The ~~HLW~~ RLD system vessels located in black cells or hard-to-reach areas ~~(e.g., RLD-VSL-00002, -00007, -00008, RLD-BRKPT-00004, -00007, -00009)~~ shall be designed ~~to withstand the maximum negative pressure generated by the HLW melter offgas treatment process system (HOP) and~~ for a minimum design pressure of 15 psig. [Section 16.4.2.1, BOD] ~~(D.1.1)~~

Basis Discussion: ~~The HLW-RLD vessels are designed to withstand the maximum negative pressure vacuum created by the HLW-HOP booster and stack fans.~~ Vessels in black cells or hard-to-reach areas are designed for pressures irrespective of their actual operating pressure to provide a robust design. [ALARA]

Verification: Verification is expected to be achieved through the following:

Verif. Method	Verif. By	Plan	Notes/Comments
A	**ENG**	Perform an analysis to verify the vessel design using a minimum design pressure of 15 psig~~determine the maximum negative pressure generated by the HOP system and verify the RLD vessel design can withstand it~~.	
R	**ENG**	Review ~~of~~ the design to verify that ~~HLW~~ RLD system vessels located in black cells or hard-to-reach areas are designed in accordance with the results of the analysis~~(e.g., RLD-VSL-00002, -00007, -00008, RLD-BRKPT-00004, -00007, -00009) are designed to withstand the maximum negative pressure generated by the HOP system and a minimum design pressure of 15 psig~~.	~~Documented in DVR.~~

3.5.1.1.3 ~~Black Cell/Hard-To-Reach Fatigue Analysis - Vessels~~Deleted

~~**Requirement**: The design of HLW-RLD vessels (including internal components) located in black cells or hard-to-reach areas (e.g., RLD-VSL-00002, -00007, -00008, RLD-BRKPT-00004, -00007, -00009) shall include fatigue analyses in accordance with the ASME Section VIII, Division 1, Paragraph UG-22(e) and ASME Section VIII, Division 2, Paragraph AD-160 and Appendices 4 and 5, as required, to ensure that they will maintain integrity for the number of expected cycles during operation over a design life of 40 years. [Section 16.4.2.3, BOD]~~

~~**Basis Discussion**: None~~

~~**Verification**: Verification is expected to be achieved through the following:~~

~~Verif. Method~~	~~Verif. By~~	~~Plan~~	~~Notes/Comments~~
~~**A**~~	~~**ENG**~~	~~Perform fatigue analyses on HLW-RLD vessels (including internal components) located in black cells or hard-to-reach areas (e.g., RLD-VSL-00002, -00007, -00008, RLD-BRKPT-00004, -00007, -00009) in accordance with the ASME Section VIII, Division 1, Paragraph UG-22(e) and ASME Section VIII, Division 2, Paragraph AD-160 and Appendices 4 and 5, as required.~~	
~~**R**~~	~~**ENG**~~	~~Review of design to verify performance of fatigue analyses per code requirements.~~	~~May be documented in an assessment/evaluation.~~

3.5.1.2 Capacity of ~~Vessel HLW~~ RLD-VSL-00007

Requirement: ~~The HLW-RLD vessel~~ RLD-VSL-00007 shall be sized to accommodate the required effluent inflows; the vessel maximum capacity shall conform to the stated maximum capacities in the Dangerous Waste Permit (DWP). [Section III.10.E.1.b, Table III.10.E.C, DWP] (~~A.1, A.1.1,~~ A.2)

Basis Discussion: ~~RLD-VSL-00007 receives effluents from the HLW-HDH, HLW-HOP, and HSH.~~ The maximum capacity of RLD-VSL-00007 is restricted by the dangerous waste portion of the Resource Conservation and Recovery Act (RCRA) Permit ~~(DWP-WA7890008967) see Table III.10.E.C and is why this functional requirement exist~~.

Verification: Verification is expected to be achieved through the following:

Verif. Method	Verif. By	Plan	Notes/Comments
A	**ENG**	Perform an analysis to verify an adequate vessel sizing.~~Analysis documenting that HLW-RLD vessel RLD-VSL-00007 is sized to accommodate the required effluent inflows.~~	
R	**ENG**	Review the design to verify conformance with the results of the analysis.~~Review of design to ensure conformance to the results of the analysis and to the DWP requirements.~~	

3.5.1.3 Capacity of ~~Vessel HLW~~ RLD-VSL-00008

Requirement: ~~The HLW-RLD vessel~~ RLD-VSL-00008 shall be sized to accommodate the required effluent inflows; the vessel maximum capacity shall conform to the stated maximum capacities in the Dangerous Waste Permit (DWP). [Section III.10.E.1.b, Table III.10.E.C, DWP] (~~A.1, A.1.1, A.1.4,~~ A.2)

Basis Discussion: ~~RLD-VSL-00008 receives effluents from the HLW HDH, HLW HOP, HSH, NLD, PCW, PWD racks drains, and C3/C5 area sumps.~~ The maximum capacity of RLD-VSL-00008 is restricted by the dangerous waste portion of the Resource Conservation and Recovery Act (RCRA) Permit~~ (DWP WA7890008967) see Table III.10.E.C and is why this functional requirement exist~~.

Verification: Verification is expected to be achieved through the following:

Verif. Method	Verif. By	Plan	Notes/Comments
A	**ENG**	Perform an analysis to verify adequate vessel sizing.~~Analysis documenting that HLW-RLD vessel RLD-VSL-00008 is sized to accommodate the required effluent inflows.~~	
R	**ENG**	Review the design to verify conformance with the results of the analysis.~~Review of design to ensure conformance to the results of the analysis and to the DWP requirements.~~	

3.5.1.4 Capacity of ~~Vessel HLW~~ RLD-VSL-00002

Requirement: ~~The HLW-RLD vessel~~ RLD-VSL-00002 shall be sized to accommodate the required effluent inflows; the vessel maximum capacity shall conform to the stated maximum capacities in the Dangerous Waste Permit (DWP). [Section III.10.E.1.b, Table III.10.E.C, DWP] (A.2~~1, A.1.2~~)

Basis Discussion: ~~Vessel RLD-VSL-00002 receives condensate from the low points in the main offgas ducts downstream of the HEMEs (HOP-HEME-00001A/B and HOP-HEME-00002A/B); condensate from low points in the main PJV header; and plant wash for level makeup to assure a hydraulic seal.~~ The maximum capacity of RLD-VSL-00002 is restricted by the dangerous waste portion of the Resource Conservation and Recovery Act (RCRA) Permit~~ (DWP WA7890008967) see Table III.10.E.C and is why this functional requirement exist~~.

Verification: Verification is expected to be achieved through the following:

Verif. Method	Verif. By	Plan	Notes/Comments
A	**ENG**	Perform an analysis to verify adequate vessel sizing.~~Analysis documenting that HLW-RLD vessel RLD-VSL-00002 is sized to accommodate the required effluent inflows.~~	
R	**ENG**	Review the design to verify conformance with the results of the analysis.~~Review of design to ensure conformance to the results of the analysis and to the DWP.~~	

3.5.1.5 Vessel~~s~~ Overflow ~~Feature Design~~

Requirement: The ~~HLW~~ RLD system vessels ~~(RLD-VSL-00002, -00007, -00008)~~ shall have an instantaneously and continuously available overflow feature ~~consisting of vessel openings and attached piping~~ sized to ~~at least meet~~ handle the maximum in-flow rate to the vessel without the liquid level in the vessel reaching an unacceptably high level. [Section 6.7.5, ~~14.10.1.1,~~ BOD] ~~(C.1.3.1, C.1.3.2)~~(C.2)

Basis Discussion: ~~The overflow features for RLD-VSL-00002, RLD-VSL-00007, and RLD-VSL-00008 provide a flow pathway to avoid overfilling the vessel to the point where backflow could occur or over pressurization. The overflow lines are sized to at least meet the maximum in-flow rate without over pressurizing the vessels. The common overflow line for RLD-VSL-00007 and RLD-VSL-00008 has a loop seal to prevent air inflow into the PVV/HOP systems.~~

~~The overflow features on the RLD minimize the potential for effluents from the RLD vessels backflow to low contamination or radiation areas, which limits dose exposure of personnel.~~
The overflow features for RLD system vessels prevent liquid from entering the vessel ventilation system in the event that normal process operating controls and trips fail to stop vessel overfilling. [ALARA]

Verification: Verification is expected to be achieved through the following:

Verif. Method	Verif. By	Plan	Notes/Comments
A	**ENG**	Perform an analysis to verify the required overflow line size to handle the maximum in-flow rate to the vessel without the liquid level in the vessel reaching an unacceptably high level.	
R	**ENG**	Review the ~~HLW~~ RLD system vessel design for the incorporation of an instantaneously and continuously available overflow feature that is sized in accordance with the results of the analysis.	
~~**A**~~	~~**ENG**~~	~~Perform an analysis to document that the overflow lines are sized correctly. (i.e., the overflow lines are sized to at least meet the maximum in-flow rate) without over pressurizing the vessels.~~	

3.5.1.6 Vessel Overflow Design

Requirement: The RLD system vessel overflow lines shall contain no valves or other restrictions and are designed to prevent the buildup of material that could cause blockages. [Section 6.7.5, BOD] (C.2)

Basis Discussion: No design features are included that would preclude the overflow line from preventing liquid from entering the vessel ventilation system.

Verification: Verification is expected to be achieved through the following:

Verif. Method	Verif. By	Plan	Notes/Comments
R	ENG	Review the design of RLD system vessel overflow lines to verify that no valves or other restrictions are included and that the lines are designed to prevent the buildup of material that could cause blockages.	

3.5.1.7 Vessel Overflow to Cells

Requirement: Where RLD system vessels overflow to cells, the overflow system shall maintain segregation of the cell and the vessel ventilation system. [Section 6.7.5, BOD] (C.2)

Basis Discussion: Overflow systems must meet the requirements of WAC 173-303. In meeting these requirements, overflowing directly to the cell floor is only considered as the last overflow in a cascaded system.

Verification: Verification is expected to be achieved through the following:

Verif. Method	Verif. By	Plan	Notes/Comments
R	ENG	Review the design of RLD system vessel overflow lines which overflow to cells to verify that the cell and the vessel ventilation system are segregated.	

3.5.1.8 Return of Overflows to the Process

Requirement: RLD system vessel overflows shall be returned to the waste treatment process. [Section 6.7.5, BOD] (C.2)

Basis Discussion: None.

Verification: Verification is expected to be achieved through the following:

Verif. Method	Verif. By	Plan	Notes/Comments
R	ENG	Review the design of the RLD system to verify that vessel overflows are returned to the waste treatment process.	

3.5.1.9 Vessel Mixing

Requirement: The RLD system shall include a provision for the effective homogenization of vessel contents (i.e. liquid contents for sampling), the re-suspension of settled solids, and the blending of cold chemicals with active process liquids. [Sections 6.1, 6.7.3, BOD] [Section 14.14, ORD] [Section 4F.2.3, DWP] (A.3)

Basis Discussion: Mixing the contents of RLD system vessels, maintaining the suspension of solids, and sufficiently blending chemicals used in pH adjustment provides the ability to obtain representative vessel samples of liquid contents. The types of agitation systems to be considered are mechanical agitators, mechanical pump recirculation, and pulse jet mixers.

Verification: Verification is expected to be achieved through the following:

Verif. Method	Verif. By	Plan	Notes/Comments
R	ENG	Review the design of the RLD system vessels to verify the inclusion of a method for vessel mixing.	

3.5.1.10 Hydrogen Purging

Requirement: The RLD system vessels shall be capable of purging hydrogen. [Section 6.1, BOD] (C.1)

Basis Discussion: Hydrogen is purged from the RLD system vessels in a fashion that precludes the buildup of hydrogen to concentrations above that specified in the authorization basis for the HLW Facility.

Verification: Verification is expected to be achieved through the following:

Verif. Method	Verif. By	Plan	Notes/Comments
R	ENG	Review the design of the RLD system vessels to verify the capability of purging hydrogen.	

3.5.1.11 Vessel Cooling and Heating

Requirement: RLD system vessels shall include cooling and/or heating capabilities, if required. If both heating and cooling are required, a duplicate coil shall be provided, as appropriate. [Sections 6.1, 11.7.4, BOD]

Basis Discussion: Cooling and/or heating are required based on the particular waste properties contained in a particular vessel and to achieve the required processing conditions.

Verification: Verification is expected to be achieved through the following:

Verif. Method	Verif. By	Plan	Notes/Comments
A	ENG	Perform an analysis to verify the cooling and/or heating required for RLD system vessels based on the particular waste properties or required process conditions.	
R	ENG	Review the design of the RLD vessels to verify that cooling and/or heating is provided in conformance with the results of the analysis.	

3.5.1.12 Condition Vessel Inventory

Requirement: RLD system vessels shall include provisions for waste neutralization. [Section 4F.2.3, DWP] (A.5)

Basis Discussion: The RLD system vessels are sampled for pH and if the effluent is out of specification prior to transfer to the PT Facility, the system includes the capability to adjust the chemical composition of the vessel inventory, as required by the Dangerous Waste Permit.

Verification: Verification is expected to be achieved through the following:

Verif. Method	Verif. By	Plan	Notes/Comments
R	ENG	Review the design to verify that RLD system vessels include a provision for waste neutralization.	

3.5.2 Nuclear Safety, ALARA, Environmental and Other Regulatory Requirements

~~None.~~

3.5.2.1 Incompatible Waste

Requirement: The RLD system vessels regulated as tank systems shall be designed to ensure that waste is not placed into the vessel that contains incompatible waste until the vessel is decontaminated (WAC 173-303-640[10]). [Section 14.10.1, BOD]

Basis Discussion: Tank systems in the HLW Facility are subject to the requirements of the Washington Administrative Code.

Verification: Verification is expected to be achieved through the following:

Verif. Method	Verif. By	Plan	Notes/Comments
R	ENG	Review the design to verify RLD system vessels regulated as tank systems are designed to ensure that waste is not placed into the vessel that contains incompatible waste until the vessel is decontaminated.	

3.5.2.2 Vessel Spill Prevention

Requirement: The RLD system vessels regulated as tank systems shall be designed with spill prevention controls (WAC 173-303-640[5][b][i]). [Section 14.10.1.1, BOD]

Basis Discussion: Tank systems in the HLW Facility are subject to the requirements of the Washington Administrative Code. Examples of spill prevention controls include check valves and dry-disconnect couplings.

Verification: Verification is expected to be achieved through the following:

Verif. Method	Verif. By	Plan	Notes/Comments
R	ENG	Review the design to verify RLD system vessels regulated as tank systems are designed with spill prevention controls.	

3.5.2.3 Reverse-Flow Diverters/Pulse Jet Mixer Exhaust

Requirement: The exhaust from the RLD system reverse-flow diverters/pulse jet mixers (RFD/PJMs) shall be vented through emission unit HV-S4 via the PJV system. [Condition 2, NOC 1053]

Basis Discussion: The RLD system RFDs and PJMs comply with the requirements approved in the radiological air permit for the HLW Facility.

Verification: Verification is expected to be achieved through the following:

Verif. Method	Verif. By	Plan	Notes/Comments
R	ENG	Review the design to verify the exhaust from the RLD system reverse-flow diverters/pulse jet mixers (RFD/PJMs) are vented through emission unit HV-S4 via the PJV system	

3.5.3 System Interface Requirements

~~The boundary limits for the interaction of the C3/C5 sumps and the HLW-RLD collection vessels start at the sumps ejectors or pump suction line. The system boundary between the HLW-RLD vessels and the PT Facility PWD is in the transfer piping 5 ft. outside the PT Facility.~~

3.5.3.1 ~~Interface with HLW Melter Feed Process System~~ Deleted

~~3.5.3.1.1 Receive Transfers from HOP Submerged Bed Scrubbers~~

~~**Requirement**: HLW-RLD vessels RLD-VSL-00007 and RLD-VSL-00008 shall be capable of receiving transfers from HOP submerged bed scrubbers (SBS) (HOP-SCB-00001/HOP-SCB-00002). (A.1.1)~~

~~**Basis Discussion**: None.~~

~~**Verification**: Verification is expected to be achieved through the following:~~

~~Verif. Method~~	~~Verif. By~~	~~Plan~~	~~Notes/Comments~~
~~R~~	~~ENG~~	~~Review design to confirm that the HOP transfer line provides a connection between the HOP SBSs and RLD-VSL-00007 and RLD-VSL-00008.~~	
~~T~~	~~SU/COM~~	~~Verify that the HLW-RLD system is capable of receiving flows as designed.~~	

~~3.5.3.1.2 Receive Transfers from HOP Submerged Bed Scrubber Condensate Receiver Vessels~~

~~**Requirement**: HLW-RLD vessel RLD-VSL-00007 shall be capable of receiving transfers from HOP SBS condensate receiver vessels (HOP-VSL-00903/HOP-VSL-00904). (A.1.1)~~

~~**Basis Discussion**: None~~

~~**Verification**: Verification is expected to be achieved through the following:~~

~~Verif. Method~~	~~Verif. By~~	~~Plan~~	~~Notes/Comments~~
~~R~~	~~ENG~~	~~Review design to confirm that SBS condensate receiver vessels are connected to the HLW-RLD RLD-VSL-00007.~~	
~~T~~	~~SU/COM~~	~~Verify that the HLW-RLD system is capable of receiving flows as designed.~~	

~~3.5.3.1.3 Receive Condensate from HOP High Efficiency Mist Eliminators~~

~~**Requirement**: HLW-RLD vessel RLD-VSL-00002 shall be capable of receiving condensate from low point drains in the offgas piping downstream of the high-efficient mist eliminators (HOP-HEME-00001A/B and HOP-HEME-00002A/B). (A.1.2)~~

~~**Basis Discussion**: The offgas drains collection vessel (RLD-VSL-00002) receives offgas condensate from a low point in the HEMEs.~~

~~**Verification**: Verification is expected to be achieved through the following:~~

~~Verif. Method~~	~~Verif. By~~	~~Plan~~	~~Notes/Comments~~
~~R~~	~~ENG~~	~~Review design to verify that the offgas drains collection vessel (RLD-VSL-00002) interfaces with the HEMEs to receive condensate from their low point drains.~~	
~~T~~	~~SU/COM~~	~~Verify that the HLW-RLD system is capable of receiving flows as designed.~~	

3.5.3.2 ~~Interface with Pulse Jet Ventilation System – Collect Condensate Drains~~Deleted

~~**Requirement**: HLW-RLD-VSL-00002 shall be capable of receiving condensate from the low point drain in the main PJV header. (A.1.2)~~

~~**Basis Discussion**: Removal of condensate prevents buildup and collapse of pipe, plugging, etc.~~

~~**Verification**: Verification is expected to be achieved through the following:~~

~~Verif. Method~~	~~Verif. By~~	~~Plan~~	~~Notes/Comments~~
~~R~~	~~ENG~~	~~Review of design to verify that RLD-VSL-00002 receives condensate from low points in the main PJV header.~~	
~~T~~	~~SU/COM~~	~~Verify that the HLW-RLD system is capable of receiving flows as designed.~~	

3.5.3.3 ~~Interface with Process Vessel Vent Exhaust System~~ Deleted

~~**Requirement**: HLW-RLD vessels (RLD-VSL-00007 and RLD-VSL-00008) shall be capable of venting directly to the PVV header that feeds into the HOP. [Section 14.10.1, BOD] (C.1.1.1)~~

~~**Basis Discussion**: None~~

~~**Verification**: Verification is expected to be achieved through the following:~~

~~Verif. Method~~	~~Verif. By~~	~~Plan~~	~~Notes/Comments~~
~~R~~	~~ENG~~	~~Review of design to verify that RLD-VSL-00007 and RLD-VSL-00008 have vent connections to the PVV.~~	

3.5.3.4 ~~Interface with C5V~~Deleted

~~**Requirement**: HLW-RLD vessel RLD-VSL-00002 headspace shall be capable of venting to the C5V via the overflow. (C.1.1.2)~~

~~**Basis Discussion:** None.~~

~~**Verification**: Verification is expected to be achieved through the following:~~

~~Verif. Method~~	~~Verif. By~~	~~Plan~~	~~Notes/Comments~~
~~R~~	~~ENG~~	~~Review of design to verify that RLD-VSL-00002 has vent connections to the C5V via the overflow.~~	

3.5.3.5 ~~Interface with the HLW-Canister Decontamination Handling System~~Deleted

~~**Requirement**: HLW-RLD vessels RLD-VSL-00007 and RLD-VSL-00008 shall be capable of receiving transfers from the HLW waste neutralization vessel (HDH-VSL-00003). (A.1.1)~~

~~**Basis Discussion**: None.~~

~~**Verification**: Verification is expected to be achieved through the following:~~

~~Verif. Method~~	~~Verif. By~~	~~Plan~~	~~Notes/Comments~~
~~R~~	~~ENG~~	~~Review design to verify that RLD-VSL-00007 and RLD-VSL-00008 interfaces with the HLW waste neutralization vessel to receive transfers.~~	
~~T~~	~~SU/COM~~	~~Verify that the HLW-RLD system is capable of receiving flows as designed.~~	

3.5.3.6 ~~Interface with HLW-Melter Cave Support Handling System~~Deleted

~~**Requirement**: HLW-RLD vessels RLD-VSL-00007 and RLD-VSL-00008 shall be capable of receiving wash transfers from decontamination tanks for melter caves 1 and 2 (HSH-TK-00001/00002). (A.1.1)~~

~~**Basis Discussion**: None.~~

~~**Verification**: Verification is expected to be achieved through the following:~~

~~Verif. Method~~	~~Verif. By~~	~~Plan~~	~~Notes/Comments~~
~~R~~	~~ENG~~	~~Review design to verify that HSH-TK-00001/00002 interfaces with the RLD-VSL-00007 and RLD-VSL-00008 to receive wash transfers.~~	
~~T~~	~~SU/COM~~	~~Verify that the HLW-RLD system is capable of receiving flows as designed.~~	

3.5.3.7 ~~Interface with HLW-Melter Feed Process System~~Deleted

~~3.5.3.7.1 Receive Wash Water Transfer from HLW HFP~~

~~**Requirement**: HLW-RLD system RLD-VSL-00008 shall be designed with capability to receive heel flush transfers from the melter feed preparation vessels (HFP-VSL-00001, HFP-VSL-00005) and the melter feed vessels (HFP-VSL-00002 and HFP-VSL-00006) only during decontamination and decommissioning activities. (A.1.4)~~

~~**Basis Discussion**: Solution transfers from HFP-VSL-00001, HFP-VSL-00002, HFP-VSL-00005, and HFP-VSL-00006 to HLW-RLD can only happen with a configuration change to the steam ejectors and steam racks.~~

~~**Verification**: Verification is expected to be achieved through the following:~~

~~Verif. Method~~	~~Verif. By~~	~~Plan~~	~~Notes/Comments~~
~~R~~	~~ENG~~	~~HLW-RLD system RLD-VSL-00008 is designed to prevent receiving heel flush transfers from the melter feed preparation vessels in the normal operational configuration.~~	

~~Verif. Method~~	~~Verif. By~~	~~Plan~~	~~Notes/Comments~~
~~R~~	~~ENG~~	~~The transfer piping/jumpers from the HFP vessels to RLD-VSL-00008 are designed with the capability to be reconfigured to receive heel flush transfers from the melter feed preparation vessels during decontamination and decommissioning activities. The design includes the elements required to reconfigure the system to receive heel flush transfers from the melter feed preparation vessels.~~	
~~T~~	~~SU/COM~~	~~Verify that steam ejector steam supply piping can be reconfigured to receive heel flush transfers from the melter feed preparation vessels and the reconfiguration allows the flows required for decontamination and decommissioning.~~	

3.5.3.8 ~~Interface with HLW-Plant Wash and Disposal System~~ Deleted

~~3.5.3.8.1 Plant Wash and Disposal System – Addition of Sodium Hydroxide~~

~~**Requirement**: The HLW-RLD system shall interface with the HLW-PWD to add sodium hydroxide for pH adjustment of the effluent in RLD-VSL-00007 and RLD-VSL-00008 before transfer to the PT Facility. (A.5.1)~~

~~**Basis Discussion**: The sodium hydroxide for pH adjustment is delivered through the PWD rack.~~

~~**Verification**: Verification is expected to be achieved through the following:~~

~~Verif. Method~~	~~Verif. By~~	~~Plan~~	~~Notes/Comments~~
~~R~~	~~ENG~~	~~Review design to verify the interface between the PWD and the HLW-RLD vessels.~~	
~~T~~	~~SU/COM~~	~~Verify that the HLW-RLD system is capable of receiving flows as designed.~~	

~~3.5.3.8.2 HLW-Plant Wash and Disposal System – Vessel Wash Water~~

~~**Requirement**: The HLW-RLD vessels shall interface with the HLW-PWD to received DIW with nitric acid to wash and decontaminate the vessels and internals. [Sections 5.2, 14.1, 20.0, ORD] (B.1.2)~~

~~**Basis**: Decontamination is used to minimize the spread or buildup of radioactive contamination and that reduces dose rates during any maintenance or during decommissioning.~~
~~[ALARA]~~

~~**Verification**: Verification is expected to be achieved through the following:~~

~~Verif. Method~~	~~Verif. By~~	~~Plan~~	~~Notes/Comments~~
~~R~~	~~ENG~~	~~Review design to verify the interface between the HLW-PWD and NAR systems and the HLW-RLD vessels to receive DIW and nitric acid for washing the vessels.~~	
~~T~~	~~SU/COM~~	~~Verify that the HLW-RLD system is capable of receiving flows as designed.~~	~~.~~

3.5.3.9 ~~HLW Plant Wash and Disposal System – Vessel And Loop Seal Makeup Water~~Deleted

~~**Requirement**: HLW-RLD-VSL-00002 and the overflow loop seals between HLW-RLD-VSL-00007, RLD-VSL-00008, and HCP-SUMP-00001 shall have the capability to receive makeup water from the PWD rack. (A.5.2)~~

~~**Basis Discussion**: Receipt of effluent in the RLD-VSL-00002 is not driven by a transfer device; there is no operating sequence to initiate or shut off the transfer. When there is insufficient condensate incoming into RLD-VSL-00002 from the offgas drains to balance evaporation, level makeup is added to the vessel to maintain a hydraulic seal.~~

~~The overflow loop seals between HLW-RLD-VSL-00007, RLD-VSL-00008, and HCP-SUMP-00001 receive makeup water via PWD-RK-00032 to ensure a hydraulic seal that prevents black cell air from entering the vessels' headspace.~~
~~[ALARA]~~

~~**Verification**: Verification is expected to be achieved through the following:~~

~~Verif. Method~~	~~Verif. By~~	~~Plan~~	~~Notes/Comments~~
~~R~~	~~ENG~~	~~Review design to verify the makeup capability from the HLW-PWD to the HLW-RLD RLD-VSL-00002, and to the overflow loop seals between HLW-RLD-VSL-00007, RLD-VSL-00008, and HCP-SUMP-00001.~~	

3.5.3.10 ~~Interface with HLW Plant Cooling Water System~~Deleted

~~**Requirement**: Capability shall be provided to drain PCW secondary loops to RLD-VSL-00008. (A.1.4)~~

~~**Basis Discussion**: None.~~

~~**Verification**: Verification is expected to be achieved through the following:~~

~~Verif. Method~~	~~Verif. By~~	~~Plan~~	~~Notes/Comments~~
~~R~~	~~ENG~~	~~Review design to verify that piping exists between the HLW-PCW drain header and RLD-VSL-00008.~~	
~~T~~	~~SU/COM~~	~~Verify that the HLW-RLD system is capable of receiving flows as designed.~~	~~.~~

3.5.3.11 ~~Interface with Nonradioactive Liquid Waste Disposal System~~ Deleted

~~**Requirement**: HLW-RLD system RLD-VSL-00008 shall be capable of receiving off-spec effluents from the NLD C2 drain collection tank (NLD-TK-00006). (A.1.4)~~

~~**Basis Discussion**: This is an ALARA feature because it allows for the transfer of out of specification NLD waste into the RLD system which prevents contamination and provides an acceptable disposal route.~~
~~[ALARA]~~

~~**Verification**: Verification is expected to be achieved through the following:~~

~~Verif. Method~~	~~Verif. By~~	~~Plan~~	~~Notes/Comments~~
~~R~~	~~ENG~~	~~Review design to verify the transfer line interface between the C2 drain collection tank and the RLD-VSL-00008.~~	
~~T~~	~~SU/COM~~	~~Verify that the HLW-RLD system is capable of receiving flows as designed.~~	

3.5.3.12 ~~Interface with Radiation Area (C3/C5) Sumps~~ Deleted

~~**Requirement**: HLW-RLD system RLD-VSL-00008 shall be capable of receiving effluent from rad area (C3/C5) sumps. (A.1.3)~~

~~**Basis Discussion**: None.~~

~~**Verification**: Verification is expected to be achieved through the following:~~

~~Verif. Method~~	~~Verif. By~~	~~Plan~~	~~Notes/Comments~~
~~R~~	~~ENG~~	~~Review design to verify the transfer line interface between the rad area (C3/C5) sumps and the RLD-VSL-00008.~~	
~~T~~	~~SU/COM~~	~~Verify that the HLW-RLD system is capable of receiving flows as designed.~~	

3.5.3.13 ~~Interface with Decontamination Glove Box/Booth Effluents~~ Deleted

~~**Requirement**: RLD-VSL-00008 shall be capable of receiving effluent from the decontamination glove box (WTP-MH-30-MHAN-00007) and the decontamination booth (WTP-MH-30-MHAN-00004) both of which are located in Room H-0311A. (A.1.4.1)~~

~~**Basis Discussion**: The drain transfers from the decontamination glove box and decontamination booth are considered routine but at low and undetermined frequency and volume.~~
~~[ALARA]~~

~~**Verification**: Verification is expected to be achieved through the following:~~

~~Verif. Method~~	~~Verif. By~~	~~Plan~~	~~Notes/Comments~~
~~R~~	~~ENG~~	~~Review design to verify the transfer line interface between the decon glove box/booth and the RLD-VSL-00008.~~	

3.5.3.14 ~~Interface with Pretreatment Plant Wash and Disposal System~~ Deleted

~~**Requirement**: The HLW-RLD shall be capable of transferring radioactively contaminated collected effluents in RLD-VSL-00007 or RLD-VSL-00008 to either the pretreatment HLW effluent transfer vessel (PWD-VSL-000043) or the pretreatment ultimate overflow vessel (PWD-VSL-00033). (A.6)~~

~~**Basis Discussion**: None.~~

~~**Verification**: Verification is expected to be achieved through the following:~~

~~Verif. Method~~	~~Verif. By~~	~~Plan~~	~~Notes/Comments~~
~~R~~	~~ENG~~	~~Review the design to confirm that HLW-RLD vessels (RLD-VSL-00007/RLD-VSL-00008) have the capability to transfer collected effluents to either PWD-VSL-00043 or PWD-VSL-00033.~~	
~~T~~	~~SU/COM~~	~~Demonstrate that the HLW-RLD system is capable of transferring effluents as designed.~~	

3.5.3.15 ~~Interface with Autosampling System –~~ Vessel Sampling

Requirement: The ~~HLW-~~RLD system shall provide ~~interface with the WTP-ASX~~sample supply and return lines to ASX-SMPLR-00028 to sample the contents of ~~HLW-RLD vessels~~ RLD-VSL-00007 and RLD-VSL-00008~~, which shall include a recirculation loop to the ASX for sampling to return effluents back to the HLW-RLD vessels~~. ~~[Section 6.7.4, BOD]~~ [Section 14.14, ORD] [Section 4F.2.3, DWP] [Section 16.4.2.6, BOD] (A.4)

Basis Discussion: Automatic sampling of process streams is used where possible to reduce personnel exposure and operator time requirements. [ALARA] ~~The sampling transfer from either HLW-RLD vessel (RLD-VSL-00007/00008) is by the HLW-RLD sample and transfer pumps.~~

Verification: Verification is expected to be achieved through the following:

Verif. Method	Verif. By	Plan	Notes/Comments
R	ENG	Review the ~~piping~~ design to ~~confirm~~ verify the sample lines provide the capability to recirculate sample fluid between the ASX and ~~HLW-RLD vessels~~ RLD-VSL-00007 and RLD-VSL-00008.	
~~T~~	~~SU/COM~~	~~Demonstrate the sampling function of the HLW-RLD via the ASX system.~~	

3.5.3.16 ~~Interface with Autosampling System – Receive Autosampler Drains~~Deleted

~~**Requirement**: The HLW-RLD shall provide interface with the WTP-ASX to receive drains from the autosampler ASX-SMPLR-00028 confinement boundary. (A.1.4.2)~~

~~**Basis Discussion**: None.~~

~~**Verification**: Verification is expected to be achieved through the following:~~

~~Verif. Method~~	~~Verif. By~~	~~Plan~~	~~Notes/Comments~~
~~R~~	~~ENG~~	~~Review the design to confirm that the ASX-SMPLR-00028 drains are routed to HLW-RLD.~~	

3.5.4 Other Technical, Specialty, Operations and Maintenance Requirements

3.5.4.1 Vessel Washing

Requirement: The ~~HLW-~~RLD system vessels shall include the capability to add decontamination chemicals for clean-out and shall generally be equipped with interior perimeter spray rings, or an equivalent design feature~~(RLD-VSL-00002/00007/00008) shall be equipped with internal spray mechanisms~~. [Sections 11.7.4, 16.4.8, BOD] [Sections 14.1, 14.2, ~~14.8,~~ 20.0, ORD] (B.~~1.~~2)

Basis Discussion: The internal spray mechanism in the vessels facilitates the removal of contamination and prevents the buildup of solids on the vessel walls. ~~The HLW-RLD vessels are to be cleaned prior to removal for decontamination and decommissioning. This requirement is ALARA affecting because the function of the internal spray mechanism is to reduce the dose rates on the vessel during decommissioning.~~ [ALARA]

Verification: Verification is expected to be achieved through the following:

Verif. Method	Verif. By	Plan	Notes/Comments
R	**ENG**	Review the design to verify the RLD system vessels include the capability to add decontamination chemicals for clean-out and are equipped with an interior spray/rinse feature.~~Review vessel design documents to verify the RLD vessels contain internal spray mechanisms.~~	

3.5.4.2 Vessel Access

Requirement: The RLD system vessels shall provide a means of gaining personnel access to the vessel interior. If personnel access is not feasible, provisions shall be made to ensure that the vessel cleanliness is certified at construction and maintained by controls until turnover to commissioning. [Section 19.10, ORD]

Basis Discussion: Personnel access is required to facilitate vessel integrity inspections, cleaning, and draining.

Verification: Verification is expected to be achieved through the following:

Verif. Method	Verif. By	Plan	Notes/Comments
R	**ENG**	Review the vessel design to verify a means of gaining personnel access is provided, if feasible.	

3.6 Piping and In-Line Component Requirements

3.6.1 Mission and Functional/Performance Requirements (Including States/Modes)

3.6.1.1 Piping Design

3.6.1.1.1 ~~High Point Vent for RLD Process Transfer and Sample Pipes~~Deleted

~~**Requirement**: HLW-RLD process lines shall have high point valves and vent lines from the RLD transfer lines with flush capability. Process piping high point vents shall be vented to PVV for hydrogen mitigation. [Section 14.10.1, BOD] (C.1.2)~~

~~**Basis Discussion**: None.~~

~~**Verification**: Verification is expected to be achieved through the following:~~

~~Verif. Method~~	~~Verif. By~~	~~Plan~~	~~Notes/Comments~~
~~**R**~~	~~**ENG**~~	~~Review HLW-RLD process lines design to verify high point valves, vent lines, and flushing capability.~~	

3.6.1.1.2 Siphon and Backflow Prevention

Requirement: The ~~HLW~~ RLD system piping shall be designed to mitigate the effects of unplanned siphoning or backflow~~(inclusive of PJM and steam ejector supply and exhaust piping) extending below the maximum liquid level in vessels, sumps or breakpots, shall be designed to prevent siphoning by one of the following methods: (1) ensuring one barometric head of isolation (via 34 ft vertical run), (2) piping to a destination vessel/tank that is open to air and where the discharge is always located above the maximum liquid level, or [if (1) and (2) are not practicable] (3) use of an engineered siphon breaker~~. [Section 7.1, ~~14.3,~~ ORD]~~] [Section 5.1.2, BOD] [Section 4.4.7.4, 5.6. 7, PDSA-HLW Facility]~~

Basis Discussion: ~~One barometric head on service piping lines prevents contamination spread up these utility or process lines (accomplished by 34 ft. of vertical pipe or piping to a destination outside of C5 area). This requirement is ALARA affecting because it prevents contamination from spreading from high contamination to low contamination areas thereby minimizing the dose rates in the affected areas.~~None. [ALARA]

Verification: Verification is expected to be achieved through the following:

Verif. Method	Verif. By	Plan	Notes/Comments
R	**ENG**	Review the deign to verify that the RLD system piping is designed to mitigate the effects of unplanned siphoning or backflow.~~Review design for conformance with siphoning prevention requirements.~~	~~Document in DVR~~

3.6.1.1.2.1 ~~Siphon Prevention – Steam Line Shielding~~Deleted

~~**Requirements**: The HLW RLD steam lines directly interfacing with systems containing highly radioactive material and that are designed to preclude siphoning via barometric head isolation, shall be routed in a shielded area until 34 ft of barometric isolation is achieved. [Section 3.3.5.2.8, PDSA-HLW Facility]~~

~~**Basis Discussion**: The 34 ft vertical run does not need to be continuous but the shielding must be provided until the total vertical distance is achieved.~~
~~[ALARA]~~

~~**Verification**: Verification is expected to be achieved through the following:~~

~~Verif. Method~~	~~Verif. By~~	~~Plan~~	~~Notes/Comments~~
~~R~~	~~ENG~~	~~Review design for conformance with shielding requirements for RLD steam lines entering systems containing highly radioactive material.~~	~~Document in DVR~~

3.6.1.1.3 ~~Double-Walled (Coaxial) Piping~~Moved to 3.6.1.2.1

~~**Requirement**: The RLD system transfer lines between the PT Facility and HLW Facility shall be coaxial piping. [Section 11.2.3, BOD]~~

~~**Basis Discussion**: To provide a dual containment boundary for transferring the HLW concentrate between the PT Facility and HLW Facility. Radioactive liquid transfer lines are double-encased to minimize potential for release of contamination due to breach of the process line as part of ALARA design process.~~
~~[ALARA]~~

~~**Verification**: Verification is expected to be achieved through the following:~~

~~Verif. Method~~	~~Verif. By~~	~~Plan~~	~~Notes/Comments~~
~~R~~	~~ENG~~	~~Review the piping design drawings to confirm design specifies the use of co-axial piping for transfer piping of between the HLW and the PT Facilities.~~	

3.6.1.1.3.1 ~~Coaxial Pipe Leak Detection~~Moved to 3.6.1.1.5

~~**Requirement**: Co-axial lines (pipe-in-pipe) shall have provision for leak detection in the outer coaxial pipe. [Section 11.3.5.2, BOD] [Section 14.3, ORD]~~

~~**Basis Discussion**: The leak detection capability is provided for the entire length of the transfer line from the HLW-RLD vessels to the PT-PWD vessels. [ALARA]~~

~~**Verification**: Verification is expected to be achieved through the following:~~

~~Verif. Method~~	~~Verif. By~~	~~Plan~~	~~Notes/Comments~~
~~R~~	~~ENG~~	~~Review piping design to verify that there are provisions for leakage detection for the coaxial lines.~~	

3.6.1.1.4 ~~RLD and PVV Bulge Drains~~Moved to Sections 3.6.2.3 and 3.6.2.4

~~3.6.1.1.4.1 RLD and PVV Bulge Drains - Sizing~~

~~**Requirement**: The RLD and PVV bulge drain(s) shall be sized to gravity drain at a rate equal to or exceeding the maximum possible discharge rate from RLD-PMP-00018 or RLD-PMP-00019, as applicable, while maintaining a static head that does not exceed the elevation of the nozzle for the HEPA filter inbleed line. [Section 4.4.31.4, PDSA - HLW Facility]~~

~~**Basis Discussion**: The safety function of the drain lines is to provide an unobstructed relief path for the bounding release flow rate into the bulge. The RLD and PVV bulge drains are credited as a safety significant (SS) control. [ALARA]~~

~~**Verification**: Verification is expected to be achieved through the following:~~

~~Verif. Method~~	~~Verif. By~~	~~Plan~~	~~Notes/Comments~~
~~A~~	~~ENG~~	~~Verify by analysis that RLD and PVV bulge drain(s) are sized to accommodate a flow rate equal to or exceeding the maximum possible discharge rate from RLD-PMP-00018 or RLD-PMP-00019 that does not exceed the elevation of the nozzle for the HEPA filter inbleed line.~~	
~~R~~	~~ENG~~	~~Review the piping design to verify conformance with the analysis.~~	~~May be documented in an assessment/evaluation.~~

~~3.6.1.1.4.2 RLD and PVV Bulge Drains - Weir and Strainer Design~~

~~**Requirement**: The RLD and PVV bulge drain(s) design shall include a weir and a strainer to minimize the collection of coarse materials. [Section 4.4.31.4, PDSA - HLW Facility]~~

~~**Basis Discussion**: The safety function of the drain lines is to provide an unobstructed relief path for the bounding release flow rate into the bulge. The RLD and PVV bulge drains are credited as a safety significant (SS) control. [ALARA]~~

~~**Verification**: Verification is expected to be achieved through the following:~~

~~Verif. Method~~	~~Verif. By~~	~~Plan~~	~~Notes/Comments~~
~~R~~	~~ENG~~	~~Review the RLD and PVV bulge drain design to verify inclusion of a weir and a strainer.~~	~~May be documented in an assessment/evaluation.~~

3.6.1.1.5 Coaxial Pipe Leak Detection

Requirement: RLD system coaxial lines shall have a provision for on-line primary containment leak detection. [Section 11.3.5.2, BOD] [Section 14.3, ORD]

Basis Discussion: All secondary containments are provided with leak detection systems for the detection of primary containment leaks. [ALARA]

Verification: Verification is expected to be achieved through the following:

Verif. Method	Verif. By	Plan	Notes/Comments
R	ENG	Review the RLD system coaxial pipe design to verify that there are provisions for on-line primary containment leak detection.	

3.6.1.1.6 Cross-Contamination Prevention

Requirement: Where appropriate, utility system connections to the RLD system process shall have properly engineered devices such as air gaps or adequate backflow preventers to mitigate cross-contamination. [Section 7.1, ORD]

Basis Discussion: The interfaces between utility systems and process systems are controlled to prevent the backflow of contamination into the clean utility system.

Verification: Verification is expected to be achieved through the following:

Verif. Method	Verif. By	Plan	Notes/Comments
R	ENG	Review the deign to verify that utility system connections to the RLD system process have properly engineered devices to prevent or mitigate cross-contamination.	

3.6.1.1.7 Electrical Heat Tracing

Requirement: Electrical heat tracing shall be provided for RLD system process piping and instrument sensing lines, if required. [Section 16.5, ORD] [Section 8.7, BOD]

Basis Discussion: Electrical heat tracing is provided on process lines that must be maintained at a specific process fluid operating temperature.

Verification: Verification is expected to be achieved through the following:

Verif. Method	Verif. By	Plan	Notes/Comments
R	ENG	Review the design to verify that RLD system process piping and instrument sensing lines are provided with electrical heat tracing, if required.	

3.6.1.1.8 Steam Line Lagging

Requirement: RLD system steam line lagging shall not cover valves and other equipment such as to prevent its use and identification, and not introduce hazards when removing or replacing the lagging, (e.g., sharp edges). Lagging blankets shall be installed if access is required regularly. [Section 7.1, ORD]

Basis Discussion: The ability to access and identify valves and other equipment contained in steam distribution piping is incorporated into the design of lagging and supports the continual process system operation.

Verification: Verification is expected to be achieved through the following:

Verif. Method	Verif. By	Plan	Notes/Comments
R	ENG	Review the design of the RLD system to verify any lagging on steam lines does not cover valves and other equipment.	

3.6.1.1.9 Isolation and Test Points

Requirement: Isolation and test points with drain/bleed valves shall be included in the RLD system design. [Section 11.5.1, BOD] [Sections 9.1, 19.14, ORD] (B.1)

Basis Discussion: Isolation and test points allow for testing of plant items during normal operations and removal or replacement, as applicable.

Verification: Verification is expected to be achieved through the following:

Verif. Method	Verif. By	Plan	Notes/Comments
R	ENG	Review the design to verify isolation and test points with drain/bleed valves are included in the RLD system.	

3.6.1.1.10 Process Pipe Flushing

Requirement: RLD system piping carrying contaminated liquid shall have provisions for flushing. Where appropriate, this shall also include seal loops. Connections shall be provided external to black cells to facilitate flushing of potentially corrosive deposits in piping. [Sections 14.3, 20, ORD] [Section 16.4.8, BOD] (B.1)

Basis Discussion: Periodic flushing may be required since partial plugging may develop over time, slowing down transfers.

Verification: Verification is expected to be achieved through the following:

Verif. Method	Verif. By	Plan	Notes/Comments
R	ENG	Review the design of the RLD system process piping to verify provisions are included for flushing.	

3.6.1.1.11 Release of Waste in Bulges

Requirement: The RLD system equipment such as relief valves and rupture disks shall not release waste into bulge areas. [Section 10.4, ORD]

Basis Discussion: Bulges are designed to minimize contamination and exposure to radioactive process effluents. [ALARA]

Verification: Verification is expected to be achieved through the following:

Verif. Method	Verif. By	Plan	Notes/Comments
R	ENG	Review the design to verify that RLD system equipment does not release waste into bulge areas.	

3.6.1.1.12 Piping Connections

Requirement: The RLD system process and service piping connections shall be designed to minimize the potential for liquid waste leakage or seepage when disconnected. [Section 11.4.1, BOD]

Basis Discussion: The design of RLD system piping is designed to minimize personnel exposure to radioactive process fluids. [ALARA]

Verification: Verification is expected to be achieved through the following:

Verif. Method	Verif. By	Plan	Notes/Comments
R	ENG	Review the design of the RLD system process and service piping connections to verify that they are designed to minimize the potential for liquid waste leakage or seepage when disconnected.	

3.6.1.2 Underground Piping Requirements

3.6.1.2.1 Process Piping Between Facilities

Requirement: The RLD system active process pipe work between the HLW and PT Facilities shall be direct buried coaxial pipe. This piping shall be sloped, as required. [Section 11.2.3, BOD]

Basis Discussion: Secondary containment is provided for dangerous waste transfer lines.

Verification: Verification is expected to be achieved through the following:

Verif. Method	Verif. By	Plan	Notes/Comments
R	ENG	Review the design of the RLD system to verify the active pipe work between the HLW and PT Facilities is direct buried coaxial pipe that is sloped, as required.	

3.6.1.2.2 Waste Transfer Piping Isolation

Requirement: The RLD system shall have the ability to isolate the transfer pipe between the HLW Facility and the PT Facility. [Section 11.4.7, BOD]

Basis Discussion: Isolating the facility transfer line provides the capability for phased commissioning between facilities.

Verification: Verification is expected to be achieved through the following:

Verif. Method	Verif. By	Plan	Notes/Comments
R	ENG	Review the design of the RLD system to verify the capability to isolate the transfer lines between the HLW and PT Facilities.	

3.6.1.2.3 Waste Transfer Line Depth

Requirement: All RLD system underground radiological waste transfer pipes shall be buried a minimum of 3 ft deep. [Section 10.1.5.7, BOD]

Basis Discussion: To avoid temperature monitoring, waste transfer lines are buried below the frost depth.

Verification: Verification is expected to be achieved through the following:

Verif. Method	Verif. By	Plan	Notes/Comments
R	ENG	Review the underground piping design to verify all piping is buried a minimum of 3 ft deep.	

3.6.1.2.4 Waste Transfer Line Flushing

Requirement: The RLD system shall include a flushing capability for the transfer lines between the HLW Facility and the PT Facility. [Section 14.3, ORD] (B.1)

Basis Discussion: Flushing facilities are provided between the WTP facilities to provide for normal flushes of transfer lines and for unplugging efforts when necessary.

Verification: Verification is expected to be achieved through the following:

Verif. Method	Verif. By	Plan	Notes/Comments
R	ENG	Review the design of the RLD system to verify the inclusion of a flushing capability in the transfer lines between the HLW Facility and the PT Facility.	

3.6.1.2.5 Underground Coaxial Pipe Testing

Requirement: Co-axial lines used as underground transfer lines shall have provisions to pneumatically test both the primary and secondary lines for leakage. [Section 14.3, ORD]

Basis Discussion: Underground transfer lines are pressure tested to guarantee structural integrity before being placed into service and for periodic evaluation of piping integrity.

Verification: Verification is expected to be achieved through the following:

Verif. Method	Verif. By	Plan	Notes/Comments
R	ENG	Review the underground piping design to verify provisions to pneumatically test both the primary and secondary lines for leakage are included.	

3.6.1.2.6 Waste Transfer Line Shielding

Requirement: All RLD system underground radiological waste transfer pipes shall be provided with adequate shielding to comply with ALARA goals. [Section 10.1.5.8, BOD]

Basis Discussion: Underground radiological waste transfer lines are shielded in support of meeting the target dose equivalent rate at the WTP site. Examples of adequate shielding techniques include soil, concrete, or steel. [ALARA]

Verification: Verification is expected to be achieved through the following:

Verif. Method	Verif. By	Plan	Notes/Comments
A	ENG	Perform an analysis to verify the shielding required to comply with ALARA goals.	
R	ENG	Review the design of underground radiological waste transfer lines to verify that adequate shielding is provided.	

3.6.1.2.7 Underground Piping Corrosion Protection

Requirement: RLD system underground metallic piping and fittings shall be protected from external and stray current corrosion in accordance with NACE International Standard Practice SP 0169-2013, *Control of External Corrosion on Underground or Submerged Metallic Piping Systems*. [Section 11.1.1.1, BOD]

Basis Discussion: RLD system equipment is designed to mitigate the gradual destruction of its materials of construction by chemical reactions with the environment.

Verification: Verification is expected to be achieved through the following:

Verif. Method	Verif. By	Plan	Notes/Comments
A	ENG	Perform an analysis to verify that underground piping and fittings are protected from stray current corrosion.	
R	ENG	Review the design of underground metallic piping and fittings to verify external corrosion protection features are included.	

3.6.1.2.8 Waste Transfer Line Vehicular Impacts

Requirement: The RLD system underground piping regulated as a tank system shall be designed for protection against potential damage by vehicular traffic (WAC 173-303-640[3][a][iv]). [Section 14.10.1, BOD]

Basis Discussion: Tank systems in the HLW Facility are subject to the requirements of the Washington Administrative Code.

Verification: Verification is expected to be achieved through the following:

Verif. Method	Verif. By	Plan	Notes/Comments
R	ENG	Review the design of underground piping regulated as a tank system to verify it is protected from potential damage by vehicular traffic.	

3.6.2 Nuclear Safety, ALARA, Environmental and Other Regulatory Requirements

3.6.2.1 ~~Mechanical Isolation of Supply Lines~~Deleted

~~**Requirement**: The utility supply lines (e.g., air, steam and plant wash) to the HLW-RLD vessels shall include provisions to mechanically isolate utility lines from all waste transfer lines that could potentially result in contaminating the utility supply lines. [Sections 7.1, ORD] [Section 5.1.2, BOD]~~

~~**Basis Discussion**: This mechanical isolation design feature (e.g., valves, blind flange, spectacle blinds, or capped lines) ensures no connection exists between the utility supply to prevent backflow of contamination. [ALARA]~~

~~**Verification**: Verification is expected to be achieved through the following:~~

~~Verif. Method~~	~~Verif. By~~	~~Plan~~	~~Notes/Comments~~
~~R~~	~~ENG~~	~~Review the piping design to confirm mechanical isolation capabilities on supply lines.~~	~~May be documented in an assessment/evaluation.~~

3.6.2.2 Bulge HEPA Filter In-Bleed Line

Requirement: The RLD system bulge (RLD-BULGE-00008/00009) HEPA filter in-bleed line nozzle elevation shall exceed the height of a spill from a combined total volume of RLD-VSL-00007/00008 (30,642 gal; spill volume is shared across the wet process cell and bulge). [Sections 4.4.11.1.3, 4.4.11.1.4, Appendix M, HLW PDSA]

Basis Discussion: The RLD system bulge drain supports the functional requirement of collecting, confining, and draining liquid spills and sprays resulting from a loss of primary confinement. The bottom and sides of the bulge confinement assembly provide confinement of rinse liquids and leaked process fluids and is leak tight.

Verification: Verification is expected to be achieved through the following:

Verif. Method	Verif. By	Plan	Notes/Comments
A	ENG	Perform an analysis to verify the HEPA filter in-bleed line nozzle height required based on a spill from a combined total volume of RLD-VSL-00007/00008.	
R	ENG	Review the design of the RLD system bulge HEPA filter in-bleed line nozzles to verify they are located at an elevation that exceeds the height determined in the analysis.	

3.6.2.3 Bulge Drain Design

Requirement: The RLD system bulge drain design shall minimize plugging due to debris and foreign objects. [Sections 4.4.11.1.3, 4.4.11.1.4, Appendix M, HLW PDSA]

Basis Discussion: The RLD system bulge drain supports the functional requirement of collecting, confining, and draining liquid spills and sprays resulting from a loss of primary confinement. Design methods to minimize the potential for plugging include constructing the drain lines in accordance with best practices, specifying the appropriate materials of construction, the use of a weir and strainer, and appropriately sizing the drain.

Verification: Verification is expected to be achieved through the following:

Verif. Method	Verif. By	Plan	Notes/Comments
R	ENG	Review the design of the RLD system bulge drain to verify the potential for plugging due to debris and foreign objects is minimized.	

3.6.2.4 Bulge Drain Sizing

Requirement: The RLD system bulge drain(s) shall be sized to gravity drain at a rate at least equal to the maximum possible discharge rate from RLD-PMP-00018/00019, with a liquid static head not to exceed the elevation of the nozzle for the HEPA filter in-bleed line. [Sections 4.4.11.1.3, 4.4.11.1.4, Appendix M, HLW PDSA]

Basis Discussion: The RLD system bulge drain supports the functional requirement of collecting, confining, and draining liquid spills and sprays resulting from a loss of primary confinement. The drain is sized to prevent flooding of the bulge above the leak tight confinement barrier.

Verification: Verification is expected to be achieved through the following:

Verif. Method	Verif. By	Plan	Notes/Comments
A	ENG	Perform an analysis to verify the required drain size to gravity drain at a rate at least equal to the maximum possible discharge rate from RLD-PMP-00018/00019, with a liquid static head not to exceed the elevation of the nozzle for the HEPA filter in-bleed line.	
R	ENG	Review the design of the RLD system bulge drain to verify conformance with the results of the analysis.	

3.6.3 System Interface Requirements

3.6.3.1 ~~RLD System Line Flushing via Demineralized Water System~~Deleted

~~**Requirement**: The piping design shall interface with the following systems to provide flush of DIW directly or through the PWD racks into the following lines: [Section 14.3, 20.0, ORD] (B.1.1, B.1.3, B.1.3.1, B.1.3.2, B.1.3.3, B.1.3.4, B.1.3.5)~~

- ~~Piping from RLD-VSL-00007 and RLD-VSL-00008 to PWD-VSL-00033 and PWD-VSL-00043~~
- ~~Between RLD-VSL-00007 and RLD-VSL-00008 to ASX-SMPL-00028~~
- ~~RLD-VSL-00007 recirculation line from the RLD transfer/sample pumps~~
- ~~RLD-VSL-00008 recirculation line from the RLD transfer/sample pumps~~
- ~~Level detection bubbler lines in RLD-VSL-00007 and RLD-VSL-00008~~

~~**Basis Discussion**: Flushing capability is provided for piping systems to limit accumulation of solids in process piping.~~
~~[ALARA]~~

~~**Verification**: Verification is expected to be achieved through the following:~~

~~Verif. Method~~	~~Verif. By~~	~~Plan~~	~~Notes/Comments~~
~~R~~	~~ENG~~	~~Review of P&IDs for required connections.~~	
~~T~~	~~SU/COM~~	~~Demonstrate the capability to flush the following HLW-RLD lines:~~ ~~• RLD line from RLD-VSL-00007 to ASX-SMPL-00028~~ ~~• RLD line from RLD-VSL-00008 to ASX-SMPL-00028~~ ~~• RLD line from ASX-SMPL-00028 to RLD-VSL-00007~~ ~~• RLD line from ASX-SMPL-00028 to RLD-VSL-00008~~ ~~• RLD line from RLD-PMP-00018 to PWD-VSL-00043~~ ~~• RLD line from RLD-PMP-00019 to PWD-VSL-00043~~ ~~• RLD line form RLD-PMP-00018 to PWD-VSL-00033~~ ~~• RLD line from RLD-PMP-00019 to PWD-VSL-00033~~ ~~• RLD line from RLD-PMP-00018 to RLD-VSL-00007~~ ~~• RLD line from RLD-PMP-00019 to RLD-VSL-00007~~ ~~• RLD line from RLD-PMP-00018 to RLD-VSL-00008~~ ~~• RLD line from RLD-PMP-00019 to RLD-VSL-00008~~	

3.6.3.2 ~~Interface with Process Vessel Vent Exhaust System~~ Deleted

~~**Requirement**: Process piping high points shall be vented to the PVV for hydrogen mitigation. (C.1.2)~~

~~**Basis Discussion**. None~~

~~**Verification**: Verification is expected to be achieved through the following:~~

~~Verif. Method~~	~~Verif. By~~	~~Plan~~	~~Notes/Comments~~
~~R~~	~~ENG~~	~~Review design to verify that all HLW-RLD high point vent lines are connected to the PVV.~~	

3.6.4 Other Technical, Specialty, Operations and Maintenance Requirements

3.6.4.1 ~~RLD Process Line Maximum Velocity Requirements~~ Deleted

~~**Requirement**: The HLW-RLD system piping containing slurries shall be designed to not exceed the following maximum velocities:~~

- ~~10 ft/sec. with glass formers (Case 1)~~
- ~~12 ft/sec. for less than 2wt% slurries without glass formers (Case 2)~~
- ~~12 ft/sec. for greater than 2wt% slurries without glass formers (Case 3)~~

~~[Appendix H 4.0, SRD]~~

~~**Basis Discussion**: The bulk velocity of slurries containing glass formers, within piping, and the free stream velocity along the wall of vessels should be less than 10 fps. The required wear allowance for slurries containing glass formers having velocities greater than 10 fps, or by the use of other materials of construction (other than stainless steel)are justified by calculation. The maximum flow velocities are established to limit erosion to less than the values stated in SRD Appendix H, section 4.0 over a 40 year life for 304L and 316L stainless steel (0.125 inches for case 1; 0.004 inches for case 2; 0.016 inches for case 3). Erosion values are further considered in the overall erosion/corrosion values to be applied to the design per section 3.4.1.2.2. A minimum flow velocity for slurry lines is determined by 24590-WTP-GPG-M-0058. This design guide applies only to Newtonian fluids (RLD effluents are Newtonian).~~

~~**Verification**: Verification is expected to be achieved through the following:~~

~~Verif. Method~~	~~Verif. By~~	~~Plan~~	~~Notes/Comments~~
~~A~~	~~ENG~~	~~Perform analysis of pump and line sizing to and line sizing to ensure the SRD requirement is met.~~	
~~R~~	~~ENG~~	~~Review for maximum transfer velocity design to verify conformance with analysis.~~	~~May be documented in an assessment/evaluation.~~

3.6.4.2 Pipe Draining and Slopes With Suspended Solids

Requirement: The RLD system fluid piping design shall have ~~provisions to drain the piping~~high point vents and low point drains, ~~and~~ shall have no traps or pockets that can accumulate liquids or solids that cannot be drained either by operator action or through free draining design, and shall be adequately sloped to drains/vessels. [Sections 7.1, 14.3, 20.0, ORD] [Section ~~11.3.1,~~ 16.4.2.7, BOD] (B.1)

Basis Discussion: ~~For additional details on pipe sloping, see 24590-WTP-GPG-M-027, *Recommended Slopes for Piping System*, and slope requirements on P&ID symbols and 24590-WTP-M6-50-00008 , *Legend Sheet 8 of 8*. Level piping for a short distance through wall penetrations, at connections to equipment, and at jumpers is acceptable (Section 14.3, ORD). In-cell instrument air lines connected using flexible jumpers are not considered process piping and are not required to be sloped (Section 7.1, ORD).~~

~~This is an ALARA feature because it ensures the p~~Pipes are drained of radioactive material if maintenance needs to be performed, and during decommissioning, which reduces dose and potential personnel contamination. Level piping for short distances through wall penetrations, at connections to equipment, and at jumpers is acceptable. Exceptions to this requirement include floor drains with plumbing traps and in-cell instrument air lines connected using flexible jumpers.

~~Continuous sloping and prohibition of low spots in the RLD and PVV bulges drain lines, to minimize the collection of materials, is credited in the hazards and accident analysis as a safety significant (SS) function.~~ [ALARA]

Verification: Verification is expected to be achieved through the following:

Verif. Method	Verif. By	Plan	Notes/Comments
R	ENG	Review the ~~HLW~~ RLD system fluid piping design ~~(i.e., P&IDs)~~ to ~~confirm~~ verify that piping is designed to drain.	
~~I~~	~~CON~~	~~Document inspection of installed lines to confirm draining and slope requirement.~~	~~May cite inspection records or assessment~~

3.6.4.2.1 Vacuum Breakers ~~in Piping~~

Requirement: ~~Liquid piping design~~RLD system liquid piping shall include the capability to break a vacuum in a transfer line as required to allow gravity liquid draining. [Section 7.1, ORD]

Basis Discussion: ~~In the context of HLW-RLD, "*transfer line*" refers to the HLW-RLD piping that delivers effluents from HLW to PTF.~~ The addition of a vacuum breaker to a transfer line ensure that when negative pressures occur in the pipe during operation, air will be admitted and swept in the pipe, thereby restoring normal flow. This is an ALARA feature because it allows lines to completely drain. [ALARA]

Verification: Verification is expected to be achieved through the following:

Verif. Method	Verif. By	Plan	Notes/Comments
R	**ENG**	Review the design of the RLD system liquid piping to verify that the capability to break a vacuum in a transfer line is included. ~~HLW-PWD-RLD fluid piping design (i.e., P&IDs) to confirm that a means of breaking vacuum is provided in transfer lines.~~	

3.6.4.3 ~~Ability to Isolate HLW to Pretreatment Transfer Piping~~Moved to 3.6.1.2.2

~~**Requirement**: The HLW-RLD system shall have the ability to isolate the transfer pipe between the HLW Facility and PTF vessels (RLD-VSL-00007, RLD-VSL-00008, PT-PWD-VSL-00043, and PT-PWD-VSL-00044). [Section 11.4.7, BOD]~~

~~**Basis Discussion**: This is needed to provide the capability for phased commissioning between facilities.~~

~~**Verification**: Verification is expected to be achieved through the following:~~

~~Verif. Method~~	~~Verif. By~~	~~Plan~~	~~Notes/Comments~~
~~**R**~~	~~**ENG**~~	~~Review applicable HLW-RLD P&IDs to confirm the capability to isolate transfer lines between RLD-VSL-00007, RLD-VSL-00008, PT-PWD-VSL-00043, and PT-PWD-VSL-00044.~~	

3.6.4.4 ~~Cathodic Protection~~Deleted

~~**Requirement**: Underground HLW-RLD underground transfer piping between RLD-VSL-00007, RLD-VSL-00008, PT-PWD-VSL-00043, and PT-PWD-VSL-00044 shall be cathodically protected. [Section 8.9, BOD]~~

~~**Basis Discussion**: None.~~

~~**Verification**: Verification is achieved through the following:~~

~~Verif. Method~~	~~Verif. By~~	~~Plan~~	~~Notes/Comments~~
~~**R**~~	~~**ENG**~~	~~Review design to verify that HLW-RLD underground piping between RLD-VSL-00007, RLD-VSL-00008, PT-PWD-VSL-00043, and PT-PWD-VSL-00044 are cathodically protected.~~	

3.6.4.5 Valve Requirements

3.6.4.5.1 Remote Operation of Valves

Requirement: Remote operation of RLD system valves shall be provided where accessibility is difficult, and for valves used in routine operations. [Section 14.4, ORD]

Basis Discussion: Remote operation is used to ensure that the design achieves occupational doses that are ALARA. [ALARA]

Verification: Verification is expected to be achieved through the following:

Verif. Method	Verif. By	Plan	Notes/Comments
R	ENG	Review the design of the RLD system to verify that remote operation is provided for valves installed in areas where accessibility is difficult and for valves used in routine operations.	

3.6.4.5.2 Valve Position Indication

Requirement: The RLD system valves used in process service or supporting the process in bulges or other remote locations shall be equipped with highly reliable position indicators. [Section 14.4, ORD] [Section 11.7.4, BOD]

Basis Discussion: Highly reliable position indication is required to reduce the need for contact maintenance or for sending operators into radiation/contamination areas to verify valve positions.

Verification: Verification is expected to be achieved through the following:

Verif. Method	Verif. By	Plan	Notes/Comments
R	ENG	Review the design to verify that RLD system valves used in process service are equipped with highly reliable position indicators.	

3.6.4.5.3 Prevention of Water Hammer

Requirement: The RLD system automatic valve operator closure devices shall be sufficiently slow to prevent damage from water hammer and steam-induced water hammer. [Sections 7.1, 14.4, ORD] [Section 11.7.4, BOD]

Basis Discussion: Damaging fluid pressure transients, often referred to as water hammer, are potentially generated upon the rapid closure of automatic valves due to the sudden change in liquid flow rates.

Verification: Verification is expected to be achieved through the following:

Verif. Method	Verif. By	Plan	Notes/Comments
R	ENG	Review the design to verify the valve stroke times conform to the results of fluid transient studies conducted for the WTP.	

3.6.4.5.4 Pressure Relief Valve Configuration

Requirement: Pressure relief valves shall be configured using a full port three-way, dual PSVs, and drain valves on each leg (unless a redundant train is provided) to preclude a service outage when servicing any relief valve. The three-way valve shall be designed such that there is no position where the internal plug, disc, or ball would isolate or block both PSVs simultaneously. It shall also be capable of being locked (with use of either an integral or commercially available after marker locking device) in a position that only allows one port to be fully open and the other port fully closed. [Section 14.4, ORD]

Basis Discussion: This valve configuration is required on vessels and systems that cannot be easily isolated, or when system draining and isolation would have a negative impact on safety or productivity.

Verification: Verification is expected to be achieved through the following:

Verif. Method	Verif. By	Plan	Notes/Comments
R	ENG	Review the design to verify pressure relief valves are configured using a full port three-way, dual PSVs, and drain valves on each leg.	
R	ENG	Review the design to verify the three-way valve is designed such that there is no position where the internal plug, disc, or ball would isolate or block both PSVs simultaneously.	
R	ENG	Review the design to verify the three-way valve is capable of being locked (with use of either an integral or commercially available after marker locking device) in a position that only allows one port to be fully open and the other port fully closed	

3.6.4.5.5 Valve Lockout

Requirement: The RLD system valves shall be designed/procured, where possible, to support lockout using commercially manufactured devices other than chains. [Section 7.1, ORD]

Basis Discussion: The design of RLD system valves for compatibility with commercial off-the-shelf locking devices supports maintainability, operability, and testing of the valves throughout the life of the valve.

Verification: Verification is expected to be achieved through the following:

Verif. Method	Verif. By	Plan	Notes/Comments
R	ENG	Review the RLD system design to verify valves include design provisions for lockout that do not require the use of chains, where possible.	Exceptions to the requirement must be approved in accordance with Section 2.1 of the ORD.

3.7 Pump/Ejector Requirements

3.7.1 Mission and Functional/Performance Requirements (Including States/Modes)

3.7.1.1 Sump Pump/Ejector Transfer Rate

Requirement: The ~~minimum transfer rate for the~~RLD system sump pumps/ejectors that operate in areas regulated as tank system or ancillary equipment secondary containment shall remove leaks, spills, or accumulated liquid

from the secondary containment system within 24 hours of leak detection or in as timely a manner as possible (WAC 173-303-640[4][c][iv]).~~listed below is based on the removal of the bounding source volume in 24 hours as required by the Washington State Administrative Code (WAC)~~ [Sections 14.10.1.2, 14.10.1.3, BOD] (A.1.3)

~~The following sumps are provided with leak detection capability as described in the WTP Dangerous Waste Permit:~~

~~RLD-SUMP-00001, HDH-SUMP-00001, HDH-SUMP-00002, HDH-SUMP-00003, HFP-SUMP-00002, HFP-SUMP-00005, HCP-SUMP-00001, HOP-SUMP-00003, HOP-SUMP-00008, HPH-SUMP-00001, HPH-SUMP-00003, HPH-SUMP-00005, HSH-SUMP-00003, HSH-SUMP-00007, HSH-SUMP-00008, and HSH-SUMP-00009~~

Basis Discussion: ~~The removal of spills or leak within 24 hours or in as a timely manner as possible. This is applicable to all RLD sump pumps and ejectors.~~ Tank systems in the HLW Facility are subject to the requirements of the Washington Administrative Code. [ALARA]

Verification: Verification is expected to be achieved through the following:

Verif. Method	Verif. By	Plan	Notes/Comments
A	**ENG**	Perform an analysis to verify the minimum transfer rate associated with removing accumulated liquid from secondary containment systems within 24 hours of leak detection. ~~Perform analysis to verify sumps can be emptied per requirement.~~	
R	**ENG**	Review the design of the RLD system sump pumps/ejectors to verify the minimum transfer rate conforms with the results of the analysis.~~Review design for conformance to the requirement.~~	
T	**SU/COM**	Perform test to verify RLD sump pumps/ejectors are capable of meeting the required transfer rate.	

3.7.1.2 Transfer to the PT Facility

Requirement: The RLD system shall provide the motive force to transfer mixed waste to the PT Facility. [Section 4F.2.3, DWP] (A.6)

Basis Discussion: The Dangerous Waste Permit imposes a requirement on the RLD system to transfer the contents of RLD-VSL-00007 and RLD-VSL-00008 to the PT Facility for treatment.

Verification: Verification is expected to be achieved through the following:

Verif. Method	Verif. By	Plan	Notes/Comments
R	**ENG**	Review the design to verify that the RLD system provides the motive force to transfer mixed waste to the PT Facility.	

3.7.1.3 Use of Mechanical Pumps

Requirement: The RLD system shall incorporate the minimum number of mechanical pumps in highly radioactive process systems. The use of maintenance-free fluidic transfer devices is preferred. Mechanical pumps

shall only be incorporated where continuous transfers, high flow rates, high pressures, or both, are required. [Section 11.7.4, BOD]

Basis Discussion: The use of maintenance-free fluidic transfer devices is preferred in the design of highly radioactive process systems.

Verification: Verification is expected to be achieved through the following:

Verif. Method	Verif. By	Plan	Notes/Comments
R	ENG	Review the design of the RLD system to verify the use of mechanical pumps is minimized.	

3.7.2 Nuclear Safety, ALARA, Environmental and Other Regulatory Requirements

None.

3.7.3 System Interface Requirements

3.7.3.1 ~~Interface with High Pressure Steam~~ Deleted

~~**Requirement:** The HPS system shall provide sufficient steam flow to the steam-motivated ejectors used to transfer effluent from RLD vessel RLD-VSL-00002 and from HLW Facility sumps that discharge to the RLD system via ejectors. (A.1.2)~~

~~**Basis Discussion**: None.~~

~~**Verification**: Verification is expected to be achieved through the following:~~

~~Verif. Method~~	~~Verif. By~~	~~Plan~~	~~Notes/Comments~~
~~R~~	~~ENG~~	~~Review design to verify that the HPS provides steam to steam-motivated ejectors in RLD-VSL-00002 and in HLW Facility sumps that discharge to the RLD system via ejectors.~~	
~~T~~	~~SU/COM~~	~~Demonstrate that the HLW-RLD is capable of transferring effluents as designed.~~	

3.7.4 Other Technical, Specialty, Operations and Maintenance Requirements

3.7.4.1 Pump Seals

Requirement: Pump seals or other design features, upon failure, shall not provide a pathway for liquids or gases to personnel or to the environment. [Section 14.1, ORD]

Basis Discussion: ~~HLW-RLD transfer/sampling pumps are anticipated to be located in a bulge that provides protection to personnel and the environment.~~ The spread of contaminants (liquids or gases) to personnel or to the environment is minimized by using pump seals or other design features. [ALARA]

Verification: Verification is expected to be achieved through the following:

Verif. Method	Verif. By	Plan	Notes/Comments
R	**ENG**	Review the design to verify that the RLD system pump seals, or other design features, do not provide a pathway for liquids to personnel or to the environment~~transfer/sampling pumps are located in a bulge or otherwise designed to preclude leakage of liquids/gases that could lead to exposure to the workers or the environment~~.	

3.7.4.2 ~~Backflow and~~ Steam Collapse Prevention

Requirement: The steam ejectors shall be provided with the capability to prevent collapse of steam and the resulting backflow of contamination. [Section 14.1, ORD]

Basis Discussion: ~~Air is used after a transfer in order to prevent steam collapse.~~ An example of this capability would be an automatic air blow when the steam is shut off. This requirement is ALARA because it prevents the spread of contamination from high contamination areas to low contamination areas. [ALARA]

Verification: Verification is expected to be achieved through the following:

Verif. Method	Verif. By	Plan	Notes/Comments
R	**ENG**	Review the design to verify that steam ejectors and associated components have the capability to prevent collapse of steam and the resulting backflow of contamination.	
~~**T**~~	~~**SU/COM**~~	~~Demonstrate the capability to use air to purge steam lines for the RLD steam ejectors.~~	

3.7.4.3 Pump Motors

Requirement: The following requirements apply to RLD system pump motors:

- Motors shall be squirrel-caged induction type, except for specialized applications
- Motors in hazardous locations shall have enclosures constructed for the area in which they are installed
- Motors powered from adjustable speed drives shall be definite-purpose inverter fed polyphase type
- Premium efficiency motors shall be used, where practical
- If required, the run times of selected higher horsepower motors shall be monitored
- Motors shall not be located within black cells or hard-to-reach areas

[Sections 8.4.8, 16.4.6, BOD] [Sections 7.1, 16.1, ORD]

Basis Discussion: Motors should be qualified to function in the environment in which they are installed. The selection of enclosures considers the specific conditions of the installation location.

Verification: Verification is expected to be achieved through the following:

Verif. Method	Verif. By	Plan	Notes/Comments
R	ENG	Review the design of RLD system pump motors to verify adherence to the criteria listed in the requirement.	

3.7.4.4 Vacuum Ejector Maintenance

Requirement: Provisions shall be made for the maintenance or replacement of RLD system vacuum ejectors if they are unable to sustain a 40-year life or redundant units are not available. [Section 14.1, ORD] [Section 11.3.2.6, BOD]

Basis Discussion: Vacuum ejectors are subject to continuous duty and therefore can suffer from erosion and loss of efficiency. Redundant units should be installed in the design to allow for continuous system availability.

Verification: Verification is expected to be achieved through the following:

Verif. Method	Verif. By	Plan	Notes/Comments
R	ENG	Review the design to verify that provisions for maintenance or replacement of vacuum ejectors are provided if the units are unable to sustain a 40-year life or redundant units are not provided in the design.	

3.7.4.5 Emergency Stops

Requirement: Where operators are co-located with operating machinery and physical injury is determined to be credible, dedicated emergency stops (E-stops) shall be provided near the machinery. [Section 11.12.5.3, ORD] [Section 7.3.9.1, BOD]

Basis Discussion: The location of emergency stops depends on the machine's physical and operational characteristics. Commissioning aspects should also be considered when locating the emergency stops. E-stops reduce an existing hazard to persons, machinery, or work in progress and can be initiated by a single human action when the normal stopping function is inadequate. Guidance for the application of E-stops for equipment at the WTP is provided in 24590-WTP-ES-J-11-001, *Guidance for the Application of Emergency Stops on Equipment at the WTP*.

Verification: Verification is expected to be achieved through the following:

Verif. Method	Verif. By	Plan	Notes/Comments
A	ENG	Perform an evaluation of any potential credible events that may lead to operator injury where operators are co-located with operating machinery to determine the machinery requiring emergency stops.	
R	ENG	Review the design to verify the incorporation of emergency stops on machinery deemed to have a credible injury hazard.	

3.7.4.6 Emergency Stop Reporting and Reset

Requirement: When the emergency stops are activated, the equipment shall immediately de-energize and remain in a shutdown state until the circuit is physically reset to prevent equipment from restarting while the dangerous condition exists. Each individual emergency stop, however configured, shall report its status back to its respective control system. Equipment with an ICN connection shall report the emergency stop status both to the ICN and to the local control system. Equipment with no ICN connection shall only provide emergency stop status to the local control system. [Section 7.3.9.1, BOD] [Section 11.12.5.3, ORD]

Basis Discussion: Emergency stops are normally implemented by Programmable Electronic System (PES) dedicated for that purpose. For systems with safety instrumented functions, emergency stops may also be implemented in conjunction with related safety instrumented systems (for example, using an existing PPJ controller).

Verification: Verification is expected to be achieved through the following:

Verif. Method	Verif. By	Plan	Notes/Comments
R	ENG	Review the design to verify emergency stops provide the appropriate status reporting, immediately de-energize associated equipment, and remain in a shutdown state until the circuit is physically reset.	
T	SU/ COM	Perform a test to verify the emergency stop reporting, equipment shutdown, and reset functions.	

3.8 ~~Pulse Jet Mixers~~Deleted

~~3.8.1 Mission and Functional/Performance Requirements (Including States/Modes)~~

~~3.8.1.1.1 General Agitation/Mixing~~

~~**Requirement**: The HLW-RLD shall use PJMs to agitate/mix and suspend solids present in the effluents during the process of receiving, storing, sampling and transferring effluents. [Section 6.7.3, BOD] [Section 14.14, ORD] (A.3.2)~~

~~**Basis Discussion**: The contents of the RLD vessels (RLD-VSL-00007/8) are mixed to ensure that the process control requirements are met and a representative sample can be obtained.~~

~~**Verification**: Verification is expected to be achieved through the following:~~

~~Verif. Method~~	~~Verif. By~~	~~Plan~~	~~Notes/Comments~~
~~A/T~~	~~ENG~~	~~Perform analysis or testing confirming that the RLD effluents can be agitated, mixed and suspended by the PJMs sufficiently for sampling/process control.~~	
~~R~~	~~ENG~~	~~Verify PJMs are incorporated into the design and align with mixing requirements from the analysis or test results.~~	

~~3.8.1.2 Mixing Requirements~~

~~The HLW-RLD has the requirement for both liquid-liquid and solid-liquid agitation. The requirements are as follows:~~

~~3.8.1.2.1 Re-suspend Solids~~

~~**Requirement:** HLW-RLD system vessels RLD-VSL-00007 and RLD-VSL-00008 shall be capable to re-suspend settled solids in the effluent received. [Section 6.7.3, BOD] (A.3.2)~~

~~**Basis Discussion**: None.~~

~~**Verification**: Verification is expected to be achieved through the following:~~

~~Verif. Method~~	~~Verif. By~~	~~Plan~~	~~Notes/Comments~~
~~A/T~~	~~ENG~~	~~Perform analysis or testing confirming that the RLD settled solids in the vessels with PJMs will be re-suspended by the PJMs~~	
~~R~~	~~ENG~~	~~Verify PJMs are incorporated into the design and align with the mixing re-suspension requirements from the analysis or test results.~~	~~Design conforms to as tested configuration~~

~~3.8.2 Nuclear Safety, ALARA, Environmental and Other Regulatory Requirements~~

~~None.~~

~~3.8.3 System Interface Requirements~~

~~3.8.3.1 Pulse Jet Mixer Lines Flushing via DIW~~

~~**Requirement**: PJM air supply lines shall interface with demineralized water system through the DIW racks to provide a means of flushing/cleaning the PJM lines when cleaning/decontamination is required. (B.1.3.4)~~

~~**Basis Discussion**: The PJM air supply lines are to be capable of being flushed downstream of the jet pump pairs (JPP). The PJM lines are flushed to minimize the buildup of radioactive contamination and therefore reduce the overall radiation in the area.~~
~~[ALARA]~~

~~**Verification**: Verification is expected to be achieved through the following:~~

~~Verif. Method~~	~~Verif. By~~	~~Plan~~	~~Notes/Comments~~
~~A~~	~~ENG~~	~~Perform analysis to determine DIW flushing can be achieved.~~	
~~R~~	~~ENG~~	~~Review of design to verify the PJM air lines are provided with connections to the DIW racks.~~	
~~T~~	~~SU/COM~~	~~Verify DIW is capable of flushing the PJM lines.~~	

~~3.8.3.2 ISA – Pulse Jet Mixer Motive Air~~

~~**Requirement**: The ISA shall deliver sufficient compressed air at design operating conditions to meet the functional mixing requirements for RLD vessels RLD-VSL-00007/8. (A.3.1)~~

~~**Basis Discussion**: This requirement applies to each of the four PJMs installed in RLD vessels RLD-VSL-00007 and RLD-VSL-00008.~~

~~**Verification**: Verification is expected to be achieved through the following:~~

~~**Verif. Method**~~	~~**Verif. By**~~	~~**Plan**~~	~~**Notes/Comments**~~
~~**A/T**~~	~~**ENG**~~	~~Perform an analysis or testing to determine the ISA requirements for the PJMs.~~	
~~**R**~~	~~**ENG**~~	~~Review design for conformance with analysis/results testing.~~	
~~**T**~~	~~**SU/COM**~~	~~Perform operational test to demonstrate the required compressed air is delivered to the PJM at the rate specified per analysis.~~	

~~3.8.3.3 Interface with Pulse Jet Ventilation System – Vent PJM Exhaust Air~~

~~**Requirement**: HLW-RLD-VSL-00007 and HLW-VSL-00008 pulse jet mixers (PJM) exhausts shall be delivered to the PJV system. (A.1.2)~~

~~**Basis Discussion**: None.~~

~~**Verification**: Verification is expected to be achieved through the following:~~

~~**Verif. Method**~~	~~**Verif. By**~~	~~**Plan**~~	~~**Notes/Comments**~~
~~**A/T**~~	~~**ENG**~~	~~Verify by analysis or testing the PJM exhaust rate.~~	
~~**R**~~	~~**ENG**~~	~~Review of design to verify that RLD-VSL-00007 and RLD-VSL-00008 pulse jet mixers exhaust to the PJV system in conformance with the analysis.~~	

~~3.8.4 Other Technical, Specialty, Operations and Maintenance Requirements~~

~~None.~~

3.9 Monitoring and Control Requirements~~, Report and Control System Conditions~~

3.9.1 Mission and Functional/Performance Requirements (Including States/Modes)

3.9.1.1 ~~HLW-Radioactive Liquid Waste Disposal System Vessels~~ Deleted

~~3.9.1.1.1 Process Parameters Monitoring – RLD-VSL-00002/7/8~~

~~**Requirement**: HLW-RLD vessels RLD-VSL-00002, RLD-VSL-00007 and RLD-VSL-00008 shall include temperature, pressure and level sensing capabilities and interface with the PCJ to remotely monitor pressure and effluent level within the vessels. [Section 14.10.1.1, BOD] (D.1.1) (D.1.2)~~

~~**Basis Discussion**: Temperature and pressure monitoring provide the capability to ensure the effluents within the vessels are maintained within the system specified operating range. Effluent level is monitored to prevent overflows and to provide data on the effluent level in the vessels before the effluents are transferred. [ALARA]~~

~~**Verification**: Verification is expected to be achieved through the following:~~

~~Verif. Method~~	~~Verif. By~~	~~Plan~~	~~Notes/Comments~~
~~R~~	~~ENG~~	~~Review of design for the interface capability to remotely monitor the temperature, pressure and level within HLW-RLD-VSL-00002, HLW-RLD-VSL-00002 and RLD-VSL-00008 vessels.~~	
~~T~~	~~SU/COM~~	~~Verify the capability to remotely monitor the HLW-RLD-VSL-00002, HLW-RLD-VSL-00007 and RLD-VSL-00008 temperature, pressure and level.~~	

~~3.9.1.1.2 High Liquid Level Permissive – RLD-VSL-00007/8~~

~~**Requirement**: The following components, which enable discharge paths to RLD-VSL-00007 or RLD-VSL-00008, shall interface with the PCJ system to receive a high liquid level signal if the level in RLD-VSL-00007 or RLD-VSL-00008 (as appropriate) exceeds the high setpoint: (1) HLW-RLD valves that isolate the supply motive fluid (compressed air or steam) to the sump pumps/ejectors discharging to the vessels, (2) HLW-RLD transfer pumps (i.e., RLD-PMP-00018/19), (3) pumps or valves from other systems (e.g., HSH-PMP-00001/2) discharging to the vessels. Sump pumps/ejectors supply valves shall be prevented from opening upon receipt of the high liquid level signal. Pumps shall be prevented from running upon receipt of the high liquid level signal. (WAC 173-303-640[5][b][ii]) (WAC 173-303-640[5][b]). [Sections 7.3.4, 14.10.1.1, BOD] (D.1.4)~~

~~**Basis Discussion**: This control is necessary to ensure that transfers to RLD-VSL-00007/8 cannot be initiated if the vessel(s) content levels exceed the high level setpoint. The sump diaphragm pumps are powered by instrument service air. The steam ejectors are powered by steam. Valves supplying air to the diaphragm pumps or steam to the steam ejectors must be opened to initiate the transfer process. If the PCJ system receives a signal that the RLD-VSL-00007/8 content levels exceed high level setpoint, those valves are prevented from opening. Similarly, pumps that perform transfers to RLD-VSL-00007/8 cannot receive a start signal when the vessels high level setpoint is exceeded. The RLD transfer pumps are included since they can transfer between the two vessels.~~

~~**Verification**: Verification is expected to be achieved through the following:~~

~~Verif. Method~~	~~Verif. By~~	~~Plan~~	~~Notes/Comments~~
~~R~~	~~ENG~~	~~Review the control logic design to ensure that transfers to vessel RLD-VSL-00007/8 from the following cannot be initiated when a high liquid level setpoint signal is received: (1) sump/pump ejectors, (2) RLD transfer pumps, and (3) pumps or valves from other systems (e.g., HSH-PMP-00001/2) discharging to RLD-VSL-00007/8.~~	
~~T~~	~~SU/COM~~	~~Perform operational test to verify the following upon receiving a high liquid level signal at the required setpoint from vessel RLD-VSL-00007/8: (1) valves that supply the motive fluid to the diaphragm pumps or steam ejectors cannot open, and (2) pumps discharging to RLD-VSL-00007/8 cannot start.~~	

~~3.9.1.1.3 High-High Liquid Level Interlock – RLD-VSL-00007/8~~

~~**Requirement:** The following components, which enable discharge paths to RLD-VSL-00007 or RLD-VSL-00008, shall interface with the PCJ system to receive a high-high liquid level signal if the level in RLD-VSL-00007 or RLD-VSL-00008 (as appropriate) exceeds the high-high setpoint: (1) HLW-RLD valves that isolate the supply motive fluid (compressed air or steam) to the sump pumps/ejectors discharging to the vessels, (2) HLW-~~

~~RLD transfer pumps (i.e., RLD-PMP-00018/19), (3) pumps or valves from other systems (e.g., HSH-PMP-00001/2) discharging to the vessels. Sump pumps/ejectors supply valves shall close upon receipt of the high-high liquid level signal. Pumps shall stop upon receipt of the high-high liquid level signal. (WAC 173-303-640[5][b][ii]) (WAC 173-303-640[5][b]). [Sections 7.3.4, 14.10.1.1, BOD] (D.1.4)~~

~~**Basis Discussion:** This control is necessary to ensure that transfers to RLD-VSL-00007/8 are precluded if the vessel(s) content levels exceed high-high level setpoint. If the PCJ system receives a high-high signal from RLD-VSL-00007/8, valves that enable transfer devices (sump pumps or ejectors) are must close to stop the transfer. Similarly, pumps that perform transfers to RLD-VSL-00007/8 must stop when the vessels high level setpoint is exceeded. The RLD transfer pumps are included since they can transfer between the two vessels. [ALARA]~~

~~**Verification**: Verification is expected to be achieved through the following:~~

~~Verif. Method~~	~~Verif. By~~	~~Plan~~	~~Notes/Comments~~
~~R~~	~~ENG~~	~~Review the control logic design to ensure that transfers to vessel RLD-VSL-00007/8 from the following are stopped when a high-high liquid level setpoint signal is received: (1) sump/pump ejectors, (2) RLD transfer pumps, and (3) pumps or valves from other systems (e.g., HSH-PMP-00001/2) discharging to RLD-VSL-00007/8.~~	
~~T~~	~~SU/COM~~	~~Perform operational test to verify that, upon receiving a high-high liquid level signal from vessel RLD-VSL-00007 or RLD-VSL-00008 (as appropriate) at the required setpoint, : (1) valves that supply the motive fluid to the diaphragm pumps or steam ejectors close, and (2) pumps discharging to RLD-VSL-00007/8 stop.~~	

~~3.9.1.1.4 Low-Low Liquid Level Interlock - RLD-VSL-00007/8~~

~~**Requirement:** The HLW RLD sample/transfer pumps (RLD-PMP-00018/19) shall stop when interlock signal from PCJ system is received, indicating that vessel RLD--VSL-00007 or vessel RLD-VSL-00008 is at the low-low level setpoint. [Section 7.3.4, BOD] (D.1.4)~~

~~**Basis Discussion:** The PCJ system initiates an alarm and sends a trip signal to stop the RLD sample/transfer pumps when vessel RLD-VSL-00007 or vessel RLD-VSL-00008 is at the low-low level setpoint. This stops the transfer of effluents from the vessels in order to leave sufficient heel in the vessels for proper operation of PJMs.~~

~~**Verification**: Verification is expected to be achieved through the following:~~

~~Verif. Method~~	~~Verif. By~~	~~Plan~~	~~Notes/Comments~~
~~R~~	~~ENG~~	~~Review the control logic design for incorporation of the RLD-VSL-00007/8 low-low liquid level and RLD sample/transfer pumps (RLD-PMP-00018/19) interlock.~~	
~~T~~	~~SU/COM~~	~~Perform operational test to verify that a low-low liquid level at the required setpoint(s) from the vessel RLD-VSL-00007 or vessel RLD-VSL-00008 stops the RLD sample/transfer pumps (RLD-PMP-00018/19)~~	

~~3.9.1.1.5 Low-Low Liquid Level Interlock – RLD-VSL-00002~~

~~**Requirement:** At the low-low liquid level setpoint for vessel RLD-VSL-00002, the PCJ system shall initiate an alarm and send a trip signal to close the RLD-VSL-00002's transfer ejectors valves. [Section 7.3.4, BOD] (D.1.4)~~

~~**Basis Discussion:** This control is necessary to ensure that there is sufficient heel in the vessel for proper operation and to prevent loss of a pressure boundary~~

~~**Verification**: Verification is expected to be achieved through the following:~~

~~Verif. Method~~	~~Verif. By~~	~~Plan~~	~~Notes/Comments~~
~~R~~	~~ENG~~	~~Review the control logic design for incorporation of RLD-VSL-00002 low-low liquid level alarm and trip signal to close ejectors valves used to facilitate transfer of effluents from RLD-VSL-00002.~~	
~~T~~	~~SU/COM~~	~~Perform operational test to verify that a low-low liquid level signal, at the required setpoint, from RLD-VSL-00002 closes ejector valves used to facilitate transfer of effluents from RLD-VSL-00002.~~	

3.9.1.2 ~~HLW Radioactive Liquid Waste Disposal System Sumps~~Deleted

~~3.9.1.2.1 Sump Liquid Monitoring~~

~~**Requirement:** All sumps discharging to RLD vessels shall include liquid level sensing capability and interface with PCJ system to remotely monitor liquid in the sumps. [Section 16.4.1.3, BOD] (D.1.2)~~

~~**Basis Discussion:** Liquid level in the sumps is monitored to ensure that high liquid level or low liquid level in the sumps is detected and action is taken to prevent adverse consequences to the RLD system and the HLW facility.~~

~~**Verification**: Verification is expected to be achieved through the following:~~

~~Verif. Method~~	~~Verif. By~~	~~Plan~~	~~Notes/Comments~~
~~R~~	~~ENG~~	~~Review of design for the interface capability to remotely monitor the liquid within the sumps discharging to the RLD vessels (RLD-VSL-00007/8).~~	
~~T~~	~~SU/COM~~	~~Verify the capability to remotely monitor liquid within the sumps discharging to the RLD vessels (RLD-VSL-00007/8).~~	

~~3.9.1.2.2 High-High Liquid Level Alarm and Trip for Selected Sumps~~

~~**Requirement**: At the high-high level setpoint for selected sumps the PCJ system shall initiate an alarm and send a trip signal to close the valve that supplies PWD to the wash nozzles to rinse down the cell or cave liner where the sump is located in. This requirement only applies to the following sumps: HSH-SUMP-00002, HSH-SUMP-00003, HSH-SUMP-00005, HSH-SUMP-00007, HFP-SUMP-00002, HFP-SUMP-00005, HOP-SUMP-00003, HOP-SUMP-00008, and HCP-SUMP-00001. [Section 7.3.4, 14.10.1.2, 14.10.1.3, 16.4.1.3, BOD] (D.1.4)~~

~~**Basis Discussion:** The purpose of these actions is to prevent excessive liquid accumulation in the cells that the sumps are located in.~~

~~**Verification**: Verification is expected to be achieved through the following:~~

~~Verif. Method~~	~~Verif. By~~	~~Plan~~	~~Notes/Comments~~
~~R~~	~~ENG~~	~~Review the control logic design for incorporation of sumps high-high level alarms and trip signal to close the valves supplying the PWD to the sumps.~~	
~~T~~	~~SU/COM~~	~~Verify that upon receiving a high-high liquid level signal from sumps listed above valves supplying PWD to the sumps close and an alarm is annunciated.~~	

~~3.9.1.2.3 High Liquid Level Alarm and Trip for Selected Sumps~~

~~**Requirement**: At the high level setpoint for selected sumps the PCJ system shall initiate an alarm and send a trip signal to close the valves that supply water/effluent directly to the sumps. This requirement only applies to sumps HCP-SUMP-00001 and RLD-SUMP-00001. [Section 7.3.4, 14.10.1.2, 14.10.1.3, 16.4.1.3, BOD] (D.1.4)~~

~~**Basis Discussion:** The purpose of these actions is to prevent excessive liquid accumulation in the cells that the sumps are located in.~~

~~**Verification**: Verification is expected to be achieved through the following:~~

~~Verif. Method~~	~~Verif. By~~	~~Plan~~	~~Notes/Comments~~
~~R~~	~~ENG~~	~~Review the control logic design for incorporation of sumps HCP-SUMP-00001 and RLD-SUMP-00001 high level alarms and trip signal to close the valves that supply water/effluent directly to the sumps.~~	
~~T~~	~~SU/COM~~	~~Perform operational test to verify that upon receiving a high liquid level signal from the sumps listed above, (1) an alarm is initiated, and (2) the valves that supply water/effluent directly to the sumps close.~~	

~~3.9.1.2.4 Low Liquid Level Alarm and Trip for Sumps~~

~~**Requirement:** At the low liquid level setpoint for all of the individual sumps the PCJ system shall initiate an alarm and send a trip signal to close the valves used to facilitate transfer (by supplying air to the air diaphragm pumps or high pressure steam ejectors). [Section 7.3.4, BOD] (D.1.4)~~

~~**Basis Discussion:** The purpose of the actions is to prevent high temperature steam from being directed to the vessels or manifolds (for sumps with ejectors) and to protect the sumps pumps (for sumps with pumps).~~

~~**Verification**: Verification is expected to be achieved through the following:~~

~~Verif. Method~~	~~Verif. By~~	~~Plan~~	~~Notes/Comments~~
~~R~~	~~ENG~~	~~Review the control logic design for incorporation of sumps low level alarms and trip signal to close valves used to facilitate transfer.~~	
~~T~~	~~SU/COM~~	~~Perform operational test to verify that, upon receiving a low liquid level signal from the sumps, valves used to facilitate effluent transfer close.~~	

3.9.1.3 ~~HLW-Radioactive Liquid Waste Disposal System Pumps/Ejectors and Piping~~Deleted

~~3.9.1.3.1 Temperature Monitoring - HLW-RLD Manifold~~

~~**Requirement:** The HLW-RLD piping manifolds shall include temperature sensing capability and interface with PCJ system to remotely monitor effluent temperature within the RLD manifolds. (D.1.3)~~

~~**Basis Discussion:** The effluent temperature in the RLD piping manifold is monitored to detect when the effluent being transfer to the RLD vessels is at a temperature that might damage the RLD equipment/components~~

~~**Verification**: Verification is expected to be achieved through the following:~~

~~Verif. Method~~	~~Verif. By~~	~~Plan~~	~~Notes/Comments~~
~~R~~	~~ENG~~	~~Review of design for the interface capability to remotely monitor the effluent temperature within the RLD manifolds.~~	
~~T~~	~~SU/COM~~	~~Verify the capability to remotely monitor effluent temperature within the RLD manifolds.~~	

~~3.9.1.3.2 High-High Temperature Alarm and Trip - HLW-RLD Manifold~~

~~**Requirement:** At the high-high temperature setpoint for manifolds, the PCJ system shall initiate an alarm and send a trip signal to close the sump/vessel's transfer ejector valves that transfer to the RLD manifolds. [Sections 7.3.4, BOD] (D.1.4)~~

~~**Basis Discussion:** These actions prevent the ejectors transferring to the RLD manifolds from sending a significant amount of high temperature steam into the headers and lines.~~

~~**Verification**: Verification is expected to be achieved through the following:~~

~~Verif. Method~~	~~Verif. By~~	~~Plan~~	~~Notes/Comments~~
~~R~~	~~ENG~~	~~Review the control logic design for incorporation of the manifolds high-high temperature alarm and trip signal to close the sumps/vessel's transfer ejector valves that transfer to the RLD manifolds.~~	
~~T~~	~~SU/COM~~	~~Perform operational test to verify that upon receiving a high-high temperature signal from the RLD manifold (1) an alarm is initiated and (2) the sump/vessel's transfer ejector valves that transfer effluents to the RLD manifolds close.~~	

~~3.9.1.3.3 HLW-RLD Seal Loop Level Monitoring~~

~~**Requirement:** Seal loop on RLD Vessels (RLD-VSL-00007/8) overflow lines shall include liquid level sensing capability and interface with PCJ system to remotely monitor liquid level in the seal loop. [Section 14.10.1, BOD] (D.1.4)~~

~~**Basis Discussion:** The seal loop is equipped with level instrumentation to monitor the water level in the seal loop. Water is added to the overflow seal loop to maintain the required seal if the level in the seal loop is too low.~~

~~**Verification**: Verification is expected to be achieved through the following:~~

~~Verif. Method~~	~~Verif. By~~	~~Plan~~	~~Notes/Comments~~
~~R~~	~~ENG~~	~~Review of design for the interface capability to remotely monitor the liquid level within the HLW-RLD seal loops.~~	
~~T~~	~~SU/COM~~	~~Verify the capability to remotely monitor liquid level within the HLW-RLD overflow seal loop.~~	

3.9.1.4 Sump Level Monitoring in Black Cells

Requirement: RLD system sumps in back cells shall include level monitoring. [Section 16.4.1.3, BOD] (E.2)

Basis Discussion: Liquid level in the sumps is monitored to ensure that high liquid level or low liquid level in the sumps is detected and action is taken to prevent adverse consequences to the RLD system and the HLW facility.

Verification: Verification is expected to be achieved through the following:

Verif. Method	Verif. By	Plan	Notes/Comments
R	ENG	Review the design of RLD system sumps in black cells to verify level monitoring is provided.	Per the DWP, this monitoring may be performed by instrumentation or camera inspection.

3.9.1.5 Maintenance Control

Requirement: Maintenance control shall be available as a means of operating RLD system devices independent of the control systems from a local panel, pendant, or motor control center, where appropriate. [Section 11.12.3.6, ORD]

Basis Discussion: Maintenance control is used in the event of control system failure or to perform operational tests as a result of equipment repair or maintenance.

Verification: Verification is expected to be achieved through the following:

Verif. Method	Verif. By	Plan	Notes/Comments
R	ENG	Review the design to verify that maintenance control is available as a means of operating RLD system devices independent of the controls system, where appropriate.	

3.9.1.6 Local Control Interlocks

Requirement: The RLD system equipment that can be operated at local control points shall be subject to independent protection interlocks. [Section 11.10, ORD] [Section 7.3.5.3, BOD]

Basis Discussion: Local mode allows control to be taken away from the control system. Local operations are performed at the equipment site and are not subject to control system interlocks.

Verification: Verification is expected to be achieved through the following:

Verif. Method	Verif. By	Plan	Notes/Comments
R	ENG	Review the design of RLD system equipment that can be operated at local control points to verify that it is subject to independent protection interlocks.	

3.9.2 Nuclear Safety, ALARA, Environmental and Other Regulatory Requirements

3.9.2.1 Sump Leak Detection~~ - Sumps~~

Requirement: The ~~HLW~~ RLD system sumps in areas regulated as tank systems or ancillary equipment secondary containment shall provide a leak detection system capable of detecting a leak of at least 0.1 gallons per hour within 24 hours, due to the failure of the primary containment, the presence of any release of dangerous waste, or accumulated liquid in the secondary containment system. [Sections 11.3.5.2, 14.10.1.2, 14.10.1.3, ~~14.10.2.1,~~ BOD] [Section III.10.E.9, DWP WA7890008967] ~~(D.1.2)~~(E.2)

~~The following sumps are provided with leak detection capability as described in the WTP Dangerous Waste Permit:~~

~~RLD-SUMP-00001, HDH-SUMP-00001, HDH-SUMP-00002, HDH-SUMP-00003, HFP-SUMP-00002, HFP-SUMP-00005, HCP-SUMP-00001, HOP-SUMP-00003, HOP-SUMP-00008, HPH-SUMP-00001, HPH-SUMP-00003, HPH-SUMP-00005, HSH-SUMP-00003, HSH-SUMP-00007, HSH-SUMP-00008, and HSH-SUMP-00009.~~

Basis Discussion: The ~~HLW~~ RLD system provides leak detection capability to detect the presence of any release of mixed or dangerous waste, or accumulated liquid in the secondary containment system, to indicate the need for transfer until collected material is removed. [ALARA]

Verification: Verification is expected to be achieved through the following:

Verif. Method	Verif. By	Plan	Notes/Comments
~~A~~	~~ENG~~	~~Perform analysis to verify that sumps are capable of leak detection required.~~	
R	ENG	Review the design to verify that RLD system sumps in areas regulated as tank system or ancillary equipment secondary containment provide a leak detection system capable of detecting a leak of at least 0.1 gallons per hour within 24 hours~~confirm that the sumps identified in the basis discussion has liquid detection capability at the minimum level or rate of rise in conformance with the analysis~~.	
T	SU/COM	Perform a test to verify the functionality of the leak detection system for sumps in areas regulated as tank systems or ancillary equipment secondary containment~~Verify the leak detection capability for sumps (discharging to the RLD Vessels) as described in the WTP Dangerous Waste Permit~~.	

3.9.2.2 ~~Autosampler/Pump Interlock – High Liquid Level~~ Deleted

~~**Requirement**: The HLW-RLD sample/transfer pumps (RLD-PMP-00018 and RLD-PMP-00019) shall be interlocked with the autosampler (ASX-SAMPLR-00028) to receive a pump stop signal from PPJ when liquid level in the autosampler reaches a predetermined high-level setpoint. [Section 4.4.19.3, PDSA – HLW Facility,] (D.1.4)~~

~~**Basis Discussion**: This SS interlock mitigates the consequences of an accident by stopping sample feed upon detection increase of liquids inside the autosampler enclosure boundary. The interlocks are designed to ensure that the RLD-VSL-00008 sample process operation is stopped to prevent the autosampler confinement boundary from being over filled with sample liquid due to a sample feed or return line pipe break. Without the interlock (liquid level indicators interlocked with the HLW-RLD pumps), the autosampler enclosure and drain could be overwhelmed with sample liquid from RLD-VSL-00007 or RLD-VSL-00008 and breach the autosampler enclosure, spilling into a C3 area. This situation could potentially result in "high" direct-radiation dose consequences to the facility worker.~~
~~[ALARA]~~

~~**Verification**: Verification is expected to be achieved through the following:~~

~~Verif. Method~~	~~Verif. By~~	~~Plan~~	~~Notes/Comments~~
~~R~~	~~ENG~~	~~Review design to verify inclusion of autosampler/pump liquid level interlock, as required.~~	
~~T~~	~~SU/COM~~	~~Verify that a high liquid level signal from the autosampler (ASX-SAMPLR-00028) level instrumentation via PPJ stops the HWLR-RLD sample/transfer pumps (RLD-PMP-00018 and RLD-PMP-00019).~~	

3.9.2.3 ~~Autosampler/Pump Interlock – Flushing~~ Deleted

~~**Requirement**: The HLW-RLD sample/transfer pumps (RLD-PMP-00018 and RLD-PMP-00019) shall be interlocked with the autosampler (ASX-SAMPLR-00028) to receive a pump stop signal from PPJ when associated valves are aligned for flushing activities prior to initiating the flushing activity. [Section 4.4.19.3, PDSA – HLW Facility,]~~

~~**Basis Discussion**: This SS interlock reduces the probability of direct radiation exposure to the facility worker by ensuring that the sample process operations are stopped before flushing.~~

~~**Verification**: Verification is expected to be achieved through the following:~~

~~Verif. Method~~	~~Verif. By~~	~~Plan~~	~~Notes/Comments~~
~~R~~	~~ENG~~	~~Review design to verify inclusion of autosampler/pump flushing interlock, as required.~~	
~~T~~	~~SU/COM~~	~~Verify that the HLW-RLD sample/transfer pumps (RLD-PMP-00018 and RLD-PMP-00019) are prevented from running via signal from PPJ when valve associated with the autosampler (ASX-SAMPLR-00028) flushing are aligned for flushing.~~	

3.9.2.4 Vessel Overfill Prevention Controls

Requirement: The RLD system vessels regulated as tank systems shall include overflow prevention controls (WAC 173-303-640[5][b][ii]). [Section 14.10.1.1, BOD] (C.2)

Basis Discussion: Tank systems in the HLW Facility are subject to the requirements of the Washington Administrative Code. Examples of overflow prevention controls include level sensing devices, high-level alarms, automatic feed cutoff, pressure-sensing devices, or a bypass to a standby tank.

Verification: Verification is expected to be achieved through the following:

Verif. Method	Verif. By	Plan	Notes/Comments
R	ENG	Review the design of the RLD system vessels regulated as tank systems to verify the inclusion of overflow prevention controls.	

3.9.3 System Interface Requirements

3.9.3.1 Process Control System– Instruments

Requirement: ~~Instruments connected to the PCJ shall not perform any active safety function. Instruments connected to the PCJ may include and perform safety boundary and retention functions. RLD instruments shall use standard commercially available instrumentation and communication protocols to interconnect to the PCJ. Fieldbus or Modbus communication shall be used.~~ RLD system instrumentation shall be selected to support interfaces to the PCJ system based on Digital Bus technology. Where such digital interfaces are not readily commercially available, or not appropriate, hard-wired interfaces (4-20 mA) shall be used. [Sections 9.4.1, 9.5.3.1, BOD] (E.1)

Basis Discussion: The PCJ system is used as the normal process control system. The PCJ system allows remote operator control and monitoring of the RLD system process (e.g., provision for process level, temperature, pressure, along with the ability to control and monitor pumps, motors, and valves to operate the RLD system). Examples of Digital Bus technology include Foundation Fieldbus ISA 50.02, Profibus DP, and Modbus RTU over TIA/EIA 485.

Verification: Verification is expected to be achieved through the following:

Verif. Method	Verif. By	Plan	Notes/Comments
R	ENG	Review the design to verify that RLD system instrumentation is designed to support interfaces to the PCJ system based on Digital Bus technology.~~Verify that required specifications (related to PCJ interface) are included in MRs used to procure instruments with no active safety functions.~~	

3.9.4 Other Technical, Specialty, Operations and Maintenance Requirements

3.9.4.1 Accessibility for Calibration, Testing, and Inspection

Requirement: ~~HLW~~ The RLD system shall provide the capability to access and perform remote (in cell) and direct (out cell) calibration, ~~(out cell) and~~ periodic functional testing, and inspections of equipment and components during normal operation. [Sections 6.7, 8.1.2, 9.12, ~~11.3.2.2, 12.6.3,~~ BOD] [Sections 9.1, 11.16, ORD] ~~[Section III.10.C.5.c.iii, DWP WA7890008967]~~

Basis Discussion: Personnel exposure while performing calibration, testing, or inspection should be ALARA. [ALARA]

Verification: Verification is expected to be achieved through the following:

Verif. Method	Verif. By	Plan	Notes/Comments
R	**ENG**	Review the design ~~for configuration that will facilitate access and performance of~~to verify the capability for remote (in cell) and direct (out cell) calibration~~ (out cell)~~, periodic functional testing, and inspections of equipment and components during normal operation.	~~May be documented in an assessment/evaluation.~~

3.9.4.2 Instrumentation ~~Panels~~ Location

Requirement: ~~HLW~~ RLD system instrumentation and detectors that require maintenance shall be located outside the C3 contaminated areas, where possible. However, transducer panels housing liquid level systems and associated I/O, and pressure transducers, shall be located in C3 classified areas as a precaution against back-contamination. [Section 11.16, ORD] [Section 9.4.2, BOD]

Basis Discussion: Locating instrumentation panels in C2 or lower classified areas increases the components operating life and reduces operator exposure to highly contaminated areas. In general, instrumentation is located outside of R5/C5 areas. However, for instrumentation required on contaminated processes, it is preferable to locate that instrumentation on remotely maintainable jumpers. [ALARA]

Verification: Verification is expected to be achieved through the following:

Verif. Method	Verif. By	Plan	Notes/Comments
R	**ENG**	Review the design to ensure that instrumentation ~~panels~~ (with the exception of transducer panels housing liquid and associated I/O, and pressure transducer) ~~for the HLW RLD are~~is located in C2 or lower classified areas.	~~May be documented in an assessment/evaluation.~~

3.9.4.3 Instrumentation in Black Cells

Requirement: RLD system instrumentation located within black cells or considered to be hard-to-reach shall be designed to be replaceable. [Section 16.4.5, BOD]

Basis Discussion: Guide tube designs are utilized to withdraw instruments from black cells for replacement outside the cell. [ALARA]

Verification: Verification is expected to be achieved through the following:

Verif. Method	Verif. By	Plan	Notes/Comments
R	**ENG**	Review the design of RLD system instrumentation located within black cells or considered hard-to-reach to verify it is replaceable.	

3.9.4.4 Volume Balances

Requirement: The RLD system shall include the capability to determine volume balances during transfers. [Section 7.1, ORD]

Basis Discussion: Instrumentation is used to determine and monitor the volume of effluent and waste transferred throughout the RLD system.

Verification: Verification is expected to be achieved through the following:

Verif. Method	Verif. By	Plan	Notes/Comments
R	ENG	Review the design of the RLD system to verify the capability to determine volume balances during transfers is included.	

3.9.4.5 System Control Location

Requirement: In-plant RLD system controls shall be easily accessible (radiological zone) and shall not require double staffing. [Section 11.16, ORD]

Basis Discussion: Control equipment is located close to readouts that monitor change of state so that two operators are not required for routine tasks.

Verification: Verification is expected to be achieved through the following:

Verif. Method	Verif. By	Plan	Notes/Comments
R	ENG	Review the design to verify RLD system controls are easily accessible and do not require double staffing.	

3.9.4.6 Level Instrumentation Plugging

Requirement: The RLD system design shall include methods to ensure that purge air liquid level instrumentation (pneumercator) in process vessels does not plug. [Section 11.16, ORD]

Basis Discussion: The plugging of process vessel level instrumentation could impact the ability of the sensor to provide an accurate reading of the process conditions.

Verification: Verification is expected to be achieved through the following:

Verif. Method	Verif. By	Plan	Notes/Comments
R	ENG	Review the design to verify that level instrumentation in RLD system vessels included methods to preclude plugging.	

3.9.4.7 Flush-Mounting Instrumentation

Requirement: RLD system instrumentation installed in piping with solids shall be flush-mounted. [Section 11.16, ORD]

Basis Discussion: Flush-mounting instrumentation keeps solids from plugging the line. For example, transducers installed in a short pipe stub would fill with solids, and then give erroneous indications.

Verification: Verification is expected to be achieved through the following:

Verif. Method	Verif. By	Plan	Notes/Comments
R	ENG	Review the design of the RLD system to verify that instrumentation installed in piping with solids is flush-mounted.	

3.9.4.8 Indicator Positioning

Requirement: RLD system instrument indicators shall be positioned to give a clear line-of-sight and safe accessibility. [Section 11.16, ORD]

Basis Discussion: Instrumentation is located to minimize personnel exposures during maintenance, calibration, and replacement.

Verification: Verification is expected to be achieved through the following:

Verif. Method	Verif. By	Plan	Notes/Comments
R	ENG	Review the design to verify RLD system indicators are positioned to give a clear line-of-sight and safe accessibility.	

3.9.4.9 Thermowells

Requirement: RLD system temperature elements shall be installed in thermowells. [Section 11.16, ORD]

Basis Discussion: Installing temperature elements in thermowells allows for instrument removal without interrupting the process.

Verification: Verification is expected to be achieved through the following:

Verif. Method	Verif. By	Plan	Notes/Comments
R	ENG	Review the design to verify that RLD system temperature elements are installed in thermowells.	

3.9.4.10 Flowmeter Bypass Piping

Requirement: RLD system flowmeters shall be provided with bypass piping where flow interruption is not acceptable. [Section 11.16, ORD]

Basis Discussion: This configuration allows the flow element to be isolated and repaired/replaced online without interrupting the process.

Verification: Verification is expected to be achieved through the following:

Verif. Method	Verif. By	Plan	Notes/Comments
R	ENG	Review the design to verify that RLD system flowmeters are provided with bypass piping where flow interruption is not acceptable	

3.9.4.11 Transmitter Location

Requirement: RLD system transmitters shall be located on racks to the extent practicable. Transmitter and instrument racks shall be located in a suitable area with appropriate access for maintenance. If a transmitter is required to operate in a radiation environment, a radiation tolerant transmitter or remote sensing electronic unit shall be used. [Section 9.5.6, BOD]

Basis Discussion: Installing transmitters on racks minimizes field construction costs and facilitates commissioning and maintenance.

Verification: Verification is expected to be achieved through the following:

Verif. Method	Verif. By	Plan	Notes/Comments
R	ENG	Review the design to verify that RLD system transmitters are located on racks in areas with appropriate access for maintenance.	
R	ENG	Review the design of RLD system transmitters in radiation environments to verify that a radiation tolerant or remote sensing electronic unit is provided.	

3.9.4.12 Transmitter Sensing Pipes

Requirement: RLD system transmitter sensing pipe lengths shall be minimized and shall either be self-draining or equipped with drain valves. [Section 9.5.6, BOD]

Basis Discussion: Transmitter sensing pipes are designed to drain to support maintenance and replacement.

Verification: Verification is expected to be achieved through the following:

Verif. Method	Verif. By	Plan	Notes/Comments
R	ENG	Review the design to verify that RLD system transmitter sensing pipe lengths are minimize and are either self-draining or equipped with drain valves.	

5 Sources, Bases, and Other References

5.1 Source/Basis References

Document Number	Rev	Title	Text Reference
24590-WTP-DB-ENG-01-001	7~~3~~	Basis of Design	BOD
24590-WTP-RPT-OP-01-001	9~~6~~	Operations Requirements Document	ORD
24590-WTP-PSAR-ESH-01-002-04	7~~5J~~	Preliminary Documented Safety Analysis to Support Construction Authorization; HLW Facility Specific Information	PDSA - HLW Facility
24590-WTP-SRD-ESH-01-001-02	9~~7F~~	Safety Requirements Document, Volume II	SRD

Document Number	Rev	Title	Text Reference
~~DE-AC27-01RV14136~~	~~N/A~~	~~DOE/BNI WTP Contract Mod No. 354, Section C – Statement of Work~~	~~WTP Contract~~
WA7890008967	N/A	Dangerous Waste Portion of RCRA Permit	DWP ~~WA7890008967~~

Appendix A - Test Objectives, Conditions and Acceptance Criteria

[NOTE]: ~~Demonstrations and tests identified in this appendix are preliminary, pending completion of design activities. They are established to document the flowdown of verification needs established in Section 3 but are not sufficiently detailed for development of specific system and equipment test plans. They may be used for general planning only. This note is to be removed when design is sufficiently progressed to provide the details needed to establish the basis for testing and acceptance criteria.~~The testing activities included in this Appendix are limited to those identified as needing to be performed by Startup or Commissioning to support the verification of requirements in Section 3. This Appendix does not restrict Startup or Commissioning from performing other routine system functional testing or grooming.

Requirement ~~(para #)~~Section Number	Plan (including SSCs)*	Acceptance Criteria (TAC or GTC)*	Notes/Comments	Test Conditions
~~3.4.1.1.2~~	~~Verify capability to determine volume balance during transfers to vessels RLD-VSL-00007/8.~~ ~~Level Detection – CTNs: LT-3240, LT-3241, LT-3152, LT-3153~~	~~(GTC)~~ ~~For each incoming transfer to RLD-VSL-00007/8 volume balance is determined.~~		~~TBD~~
~~3.4.4.4~~	~~Verify remotability in accordance with 24590-WTP-PL-RACT-RT-0001, *WTP Remotability Verification Plan.*~~	~~(GTC)~~ ~~Successful remote removal and re-installation of the all the RLD equipment/ components listed in the test plans.~~	~~Physical demonstration~~	~~Commissioning Remotability Program~~
~~3.4.4.5~~	~~Verify remote valve operation to ensure system operation is as designed.~~	~~(GTC)~~ ~~Valves are remotely operable.~~		~~TBD~~
~~3.4.4.5.1~~	~~Verify that power-operated valves closes at or below TBD in/s.~~	~~(GTC)~~ ~~Upon actuation, valve actuator is equal or less than TBD in/s.~~		~~TBD~~
~~3.5.3.1.1, 3.5.3.1.2, 3.5.3.1.3, 3.5.3.2, 3.5.3.5, 3.5.3.6, 3.5.3.8.1, 3.5.3.8.2, 3.5.3.10, 3.5.3.11, 3.5.3.12~~	~~Verify that the HLW-RLD system is capable of receiving flows as designed.~~	~~(GTC)~~ ~~All inflows connections to the RLD vessels (RLD-VSL-00002/7/8) convey flow to the applicable HLW-RLD vessel(s).~~ ~~Once the transfer device is turned on a level change in the RLD vessel (RLD-VSL-00007/8) is observed via the level instrumentation of the RLD vessel.~~		~~Simulant required~~
~~3.5.3.7.1~~	~~Install design elements required to establish flow from HFP-VSL-00001, HFP-VSL-00005 and the melter feed vessels (HFP-VSL-00002 and HFP-VSL-00006) during decontamination and decommissioning activities and verify flow can be established.~~ ~~**Following successful demonstration, reconfigure to prevent transfers from the melter feed preparation vessels during normal operation.**~~	~~(GTC)~~ ~~(1) Steam ejector steam supply piping can be reconfigured to enable heel flush transfers from the melter feed preparation vessels to RLD-VSL-00008.~~ ~~(2) Flow can be established.~~		
~~3.5.3.14, 3.7.3.1~~	~~Verify that the HLW-RLD system is capable of receiving and transferring effluents as designed.~~	~~(GTC)~~ ~~All transfer connections from the RLD vessels (RLD-VSL-00002/7/8) and HLW Facility sumps function as designed.~~		~~TBD~~

Requirement ~~(para #)~~Section Number	Plan (including SSCs)*	Acceptance Criteria (TAC or GTC)*	Notes/Comments	Test Conditions
~~3.5.3.15~~	~~Verify the sampling function of the HLW-RLD via the ASX system.~~ ~~Sampler – CTN: ASX-SAMPLR-00028~~ ~~Vessel – CTNs: RLD-VSL-00007, RLD-VSL-00008~~	~~(GTC)~~ ~~HLW-RLD delivers sampling flow to ASX-SAMPLR-00028 and returns flow to RLD-VSL-00007 and RLD-VSL-00008.~~		~~TBD~~
~~3.6.3.1~~	~~Verify the capability to flush the following HLW-RLD lines:~~ ~~• RLD line from RLD-VSL-00007 to ASX-SMPLR-00028~~ ~~• RLD line from RLD-VSL-00008 to ASX-SMPLR-00028~~ ~~• RLD line from ASX-SMPLR-00028 to RLD-VSL-00007~~ ~~• RLD line from ASX-SMPLR-00028 to RLD-VSL-00008 line flush from RLD-PMP-00018 to PWD-VSL-00043~~ ~~• RLD line from RLD-PMP-00019 to PWD-VSL-00043~~ ~~• RLD line form RLD-PMP-00018 to PWD-VSL-00033~~ ~~• RLD line from RLD-PMP-00019 to PWD-VSL-00033~~ ~~• RLD line from RLD-PMP-00018 to RLD-VSL-00007~~ ~~• RLD line from RLD-PMP-00019 to RLD-VSL-00007~~ ~~• RLD line from RLD-PMP-00018 to RLD-VSL-00008~~ ~~• RLD line from RLD-PMP-00019 to RLD-VSL-00008~~ ~~Perform a baseline flush test measurement without simulant, and then perform a second flush test after a simulant transfer.~~ ~~Sample/Transfer Pumps – CTNs: RLD-PMP-00018, -00019~~ ~~Vessels – CTNs: RLD-VSL-00007, -00008, PWD-VSL-00033, -00043~~ ~~Sampler – CTNs: ASX-SMPLR-00028~~	~~(GTC)~~ ~~System demonstrates the capability to flush the PT Facility HLW concentrate transfer lines using water from the HLW Facility.~~		~~Simulant required~~
3.7.1.1	Verify that the RLD sump pumps/ejectors are capable of ~~emptying the sumps~~removing a credited spill volume within 24 hours as required by the WAC. ~~Diaphragm Pumps – CTNs: RLD-PMP-00013, -00023, -00165, -00166, -00188, -00189~~ ~~Steam Ejectors – CTNs: RLD-EJCTR-00014, -00026, -00027, -00029, -00030, -00049A, -00049B, -00051, -00052A, -00052B, -00053A, -00053B, -00054, -00055, -00061, -00171, -00172, -00173, -00174, -00175, -00176A, -00176B, -00178, -00179~~ **CTNs:** TBD	~~(TAC)~~ ~~System demonstrates the capability to empty sumps with 24 hours as required by the WAC.~~ **(GTC)** The RLD system sump pumps/ejectors meet the following minimum transfer rates: (TBD)	The determination of the flow rate may be direct measurement using installed or temporary instruments, or by the time to reduce the sump volume by a known or measured quantity.	~~TBD~~

Requirement ~~(para #)~~Section Number	Plan (including SSCs)*	Acceptance Criteria (TAC or GTC)*	Notes/Comments	Test Conditions
~~3.7.4.2~~	~~Verify the capability to use air to purge steam lines for the RLD steam ejectors.~~ ~~Steam Ejectors – CTNs: RLD-EJCTR-00014, -00026, -00027, -00029, -00030, -00049A, -00049B, -00051, -00052A, -00052B, -00053A, -00053B, -00054, -00055, -00061, -00163, -00171, -00172, -00173, -00174, -00175, -00176A, -00176B, -00178, -00179~~	~~(GTC)~~ ~~The RLD steam ejectors steam lines are purged using air after use.~~		~~TBD~~
3.7.4.6	Perform a test to verify the emergency stop reporting, equipment shutdown, and reset functions. **CTNs:** TBD	**(GTC)** Upon engaging each emergency stop button, the equipment de-energizes and remains shut down until the circuit is physically reset. The emergency stop(s) report their status back to their respective control system.	Each emergency stop is tested individually.	
~~3.8.3.1~~	~~Verify the capability to flush the PJM lines.~~ ~~PJMs – CTNs: RLD-PJM-00001, -00002, -00003, -00004, -00005, -00006, -00007, -00008~~	~~(GTC)~~ ~~System demonstrates the capability to deliver the flushing water to the PJMs at the rate and pressure specified per analysis.~~		~~TBD~~
~~3.8.3.2~~	~~Verify the required compressed air is delivered to the PJM at the rate specified per analysis.~~ ~~PJMs – CTNs: RLD-PJM-00001, -00002, -00003, -00004, -00005, -00006, -00007, -00008~~	~~(GTC)~~ ~~System demonstrates the capability to deliver the required compressed air to the PJMs at the rate specified per analysis.~~		~~TBD~~
~~3.9.1.1.1~~	~~Verify the capability to remotely monitor the HLW-RLD vessels (RLD-VSL-00002, -00007, -00008) temperature, pressure, and effluent level.~~ ~~Temperature Elements - CTNs: TE-3025, TE-3214, TE-3115~~ ~~Pressure Indicators – CTNs: PT-3216, PT-3026, PT-3151~~ ~~Level Detection – CTNs: LT-3240, LT-3241, LT-3024, LT-3152, LT-3153~~	~~(GTC)~~ ~~Temperature, pressure, and level elements are monitored and displayed on the PCJ.~~		~~PCJ operating and monitoring simulate RLD vessels temperature, pressure, level.~~
~~3.9.1.2.1~~	~~Verify the capability to remotely monitor liquid in all the sumps that discharges to the HLW-RLD vessels (RLD-VSL-00007/8).~~ ~~Sumps – CTNs: HCP-SUMP-00001, HOP-SUMP-00002, HOP-SUMP-00003, RLD-SUMP-00001, HDH-SUMP-00001, HDH-SUMP-00002, HDH-SUMP-00003, HDH-SUMP-00004, HPH-SUMP-00001, HPH-SUMP-00002, HPH-SUMP-00003, HPH-SUMP-00004, HPH-SUMP-0005, HRH-SUMP-00001, HEH-SUMP-00001, HFH-SUMP-00001, HOP-SUMP-00008, HMH-SUMP-00001, HMH-SUMP-00002, HMH-SUMP-00003, HMH-SUMP-00004, HSH-SUMP-00001, HSH-SUMP-00002, HSH-SUMP-00003, HSH-SUMP-00005, HSH-SUMP-00006, HSH-SUMP-00007, HSH-SUMP-00008, HSH-SUMP-00009, HFP-SUMP-00002, HFP-SUMP-00005, RWH-SUMP-00001, RWH-SUMP-00002, RWH-SUMP-00003, RWH-SUMP-00004, RWH-SUMP-00005, RWH-SUMP-00006, RWH-SUMP-00008~~	~~(GTC)~~ ~~The presence of liquid in sumps that discharge to the RLD vessels (RLD-VSL-00007/8) are monitored and displayed on the PCJ.~~		~~TBD~~

Requirement ~~(para #)~~Section Number	Plan (including SSCs)*	Acceptance Criteria (TAC or GTC)*	Notes/Comments	Test Conditions
~~3.9.1.2.2~~	~~Verify that upon receiving a high-high liquid level signal from sumps listed below, valves supplying PWD to the sumps close and an alarm is annunciated.~~ ~~Sumps – CTNs: HSH-SUMP-00002, HFP-SUMP-00002, HSH-SUMP-00003, HOP-SUMP-00003, HCP-SUMP-00001, HSH-SUMP-00005, HOP-SUMP-00008, HSH-SUMP-00007, HFP-SUMP-00005~~ ~~Valves – CTNs: PWD-YV-0021, PWD-YV-0026, PWD-0031, PWD-YV-0060, PWD-YV-0077, PWD-YV-0093~~	~~(GTC)~~ ~~A high-high liquid level signal from any of sumps listed will close the valve supplying the PWD to the sump.~~		~~TBD~~
~~3.9.1.2.3~~	~~Verify that upon receiving a high liquid level signal from the sumps listed below, (1) an alarm is initiated, and (2) the valves that supply water/effluent directly to the sumps close.~~ ~~Sumps – CTNs: HCP-SUMP-00001, RLD-SUMP-00001~~ ~~Valves – CTNs: RLD-YV-3247, RLD-YV-3226~~	~~(GTC)~~ ~~A high liquid level signal from any of sumps listed closes the valves that supply various sources of water/effluent to the sump.~~		~~TBD~~
~~3.9.1.2.4~~	~~Verify that, upon receiving a low liquid level signal from the sumps listed below, valves used to facilitate effluent transfer close.~~ ~~Sumps – CTNs: HCP-SUMP-00001, HOP-SUMP-00002, HOP-SUMP-00003, RLD-SUMP-00001, HDH-SUMP-00001, HDH-SUMP-00002, HDH-SUMP-00003, HDH-SUMP-00004, HPH-SUMP-00001, HPH-SUMP-00002, HPH-SUMP-00003, HPH-SUMP-00004, HPH-SUMP-0005, HRH-SUMP-00001, HEH-SUMP-00001, HFH-SUMP-00001, HOP-SUMP-00008, HMH-SUMP-00001, HMH-SUMP-00002, HMH-SUMP-00003, HMH-SUMP-00004, HSH-SUMP-00001, HSH-SUMP-00002, HSH-SUMP-00003, HSH-SUMP-00005, HSH-SUMP-00006, HSH-SUMP-00007, HSH-SUMP-00008, HSH-SUMP-00009, HFP-SUMP-00002, HFP-SUMP-00005, RWH-SUMP-00001, RWH-SUMP-00002, RWH-SUMP-00003, RWH-SUMP-00004, RWH-SUMP-00005, RWH-SUMP-00006, RWH-SUMP-00008~~ ~~Valves – CTNs: RLD-YV-3233, RLD-YV-3511, RLD-YV-3502, RLD-YV-3235, RLD-YV-3234, RLD-YV-3429, RLD-YV-3432, RLD-YV-3427, RLD-YV-3425, RLD-YV-3815, RLD-YV-3426, RLD-YV-3431, RLD-YV- RLD-YV-3428, RLD- YV-3430, RLD-YV-3818, RLD-YV-3505, RLD-YV-3551, RLD-YV-3552, RLD-YV-3318, RLD-YV-3319, RLD-YV- 3368, RLD-YV-3369, RLD-YV-3320, RLD-YV-3320, RLD-YV-3317, RLD-YV-3806, RLD-YV-3367, RLD-YV-3370, RLD-YV-3856, RLD-YV-3316, RLD-YV-3366, RLD-YV-3821, RLD-YV-3871, RLD-YV-3525, RLD-YV-3508, RLD-YV-RLD-RLD-YV-3808, RLD-YV-3518, RLD-YV-3811, RLD-YV-3814, RLD-YV-3522~~	~~(GTC)~~ ~~A low liquid level signal from the sumps discharging to the RLD vessels (RLD-VSL-00007/8) closes the valves used to facilitate transfer from sumps to the RLD vessels.~~		~~TBD~~

Requirement ~~(para #)~~Section Number	Plan (including SSCs)*	Acceptance Criteria (TAC or GTC)*	Notes/Comments	Test Conditions
~~3.9.1.3.1~~	~~Verify the capability to remotely monitor effluent temperature within the RLD manifolds.~~ ~~Temperature Elements - CTNs: TE-3110, TE-3408, TE-3352, TE-3421, TE-3302~~	~~(GTC)~~ ~~Temperature elements are monitored and displayed on the PCJ.~~		~~PCJ operating and monitoring simulate RLD manifold temperature.~~
~~3.9.1.3.2~~	~~Verify that upon receiving a high-high temperature signal from the RLD manifold (1) an alarm is initiated and (2) the sump/vessel's transfer ejector valves that transfer effluents to the RLD manifolds close.~~ ~~Valves – CTNs: HDH-YV-0176, RLD-YV-3425, RLD-YV-3427, RLD-YV-3426, RLD-YV-3429, RLD-YV-3806, RLD-YV-3316, RLD-YV-3317, RLD-YV-3428, RLD-YV-3856, RLD-YV-3552, RLD-YV-3551, RLD-YV-3476, RLD-YV-3366~~	~~(GTC)~~ ~~A high-high temperature signal from the RLD manifolds sends a trip to close the sump/vessel's transfer ejector valves that transfer to the RLD manifolds.~~		~~TBD~~
~~3.9.1.3.3~~	~~Verify the capability to remotely monitor liquid level within the HLW-RLD overflow seal loops.~~	~~(GTC)~~ ~~The levels in HLW-RLD seal loops are monitored and displayed on the PCJ.~~		~~TBD~~
~~3.9.1.1.2~~	~~Verify that, upon receiving a high liquid level signal at the required setpoint (TBD) from vessel RLD-VSL-00008, the valves that supply the motive fluid to the diaphragm pumps or steam ejectors cannot open.~~ ~~Valves – CTNs: RLD-YV-3317, RLD-YV-3316, RLD-YV-3318, RLD-YV-3425, RLD-YV-3428, RLD-YV-3021, RLD-YV-3022, RLD-YV-3233, RLD-YV-3366, RLD-YV-3367, HFP-YV-0033, HFP-YV-0049, HFP-YV-2033, HFP-YV-2049~~	~~(GTC)~~ ~~A high liquid level signal from vessel RLD-VSL-00008 prevents the initiation of sumps discharge to vessel RLD-VSL-00008.~~		~~TBD~~
~~3.9.1.1.3~~	~~Verify that, upon receiving a high-high liquid level signal from vessel RLD-VSL-00008 (as appropriate) at the required setpoint (TBD), the valves on piping discharging into vessel RLD-VSL-00008, and the valves providing motive power to the diaphragm pumps or steam ejectors discharging to the vessel RLD-VSL-00008 close.~~ ~~Valves – CTNs: RLD-YV-3142, RLD-YV-3147, RLD-YV-3148, RLD-YV-3222, RLD-YV-3223, RLD-YV-3244, RLD-YV-3229, RLD-YV-3301, RLD-YV-3318, RLD-YV-3319, RLD-YV-3320, RLD-YV-3317, RLD-YV-3316, RLD-YV-3431, RLD-YV-3430, RLD-YV-3407, RLD-YV-3425, RLD-YV-3428, RLD-YV-3518, RLD-YV-3522, RLD-YV-3525, RLD-YV-3505, RLD-YV-3508, RLD-YV-3511, RLD-YV-3815, RLD-YV-3818, RLD-YV-3821, RLD-YV-3806, RLD-YV-3021, RLD-YV-3022, RLD-YV-3501, RLD-YV-3502, RLD-YV-3233, RLD-YV-3235, RLD-YV-3234, RLD-YV-3420, RLD-YV-3429, RLD-YV-3432, RLD-YV-3426, RLD-YV-3427, RLD-YV-3808, RLD-YV-3811, RLD-YV-3814,~~	~~(GTC)~~ ~~A high-high liquid level signal from vessel RLD-VSL-00008 closes (1) the valves on piping discharging into vessel RLD-VSL-00008 and (2) valves providing motive power to the diaphragm pumps or steam ejectors discharging to the vessel RLD-VSL-00008.~~		~~TBD~~

Requirement ~~(para #)~~Section Number	Plan (including SSCs)*	Acceptance Criteria (TAC or GTC)*	Notes/Comments	Test Conditions
	~~RLD-YV-3366, RLD-YV-3367, RLD-YV-3351, RLD-YV-3368, RLD-YV-3369, RLD-YV-3370, RLD-YV-3476, RLD-YV-3552, RLD-YV-3551, RLD-YV-3871, RLD-YV-3856, HFP-YV-0033, HFP-YV-0049, HFP-YV-2033, HFP-YV-2049, PWD-YV-0026, PWD-YV-0031, PWD-YV-0039, PWD-YV-0021, PWD-YV-0087, PWD-YV-0077, PWD-YV-0093, PWD-YV-0060, HSH-PMP-00001, HSH-PMP-00002, HDH-YV-0176~~			
~~3.9.1.1.2~~	~~Verify that, upon receiving a high liquid level signal at the required setpoint (TBD) from vessel RLD-VSL-00007, the valves that supply the motive fluid to the diaphragm pumps or steam ejectors cannot open.~~ ~~Valves – CTNs: RLD-YV-3232, RLD-YV-3501, RLD-YV-3502~~	~~(GTC)~~ ~~A high liquid level signal from vessel RLD-VSL-00007 prevents the initiation of sumps discharge to vessel RLD-VSL-00007.~~		~~TBD~~
~~3.9.1.1.2~~	~~Verify that, upon receiving a high liquid level signal at the required setpoint (TBD) from vessel RLD-VSL-00007, the valves that supply the motive fluid to the diaphragm pumps or steam ejectors cannot open.~~ ~~Pumps – CTNs: RLD-PMP-00018, RLD-PMP-00019, HSH-PMP-00001, HSH-PMP-00002.~~	~~(GTC)~~ ~~A high liquid level signal from vessel RLD-VSL-00007 prevents the initiation of sumps discharge to vessel RLD-VSL-00007.~~		~~TBD~~
~~3.9.1.1.3~~	~~Verify that, upon receiving a high-high liquid level signal from vessel RLD-VSL-00007 at the required setpoint (TBD), the valves on piping discharging into vessel RLD-VSL-00007, and the valves providing motive power to the diaphragm pumps or steam ejectors discharging to the vessel RLD-VSL-00007 close.~~ ~~Valves – CTNs: RLD-YV-3105, RLD-YV-3156, RLD-YV-3232, RLD-YV-3140, RLD-YV-3141, RLD-YV-3501, RLD-YV-3502, RLD-YV-3237, HDH-YV-0174, HDH-YV-0175, HOP-YV-0121, HOP-YV-0128, HOP-YV-2121, PWD-YC-0026, HOP-YC-2120~~	~~(GTC)~~ ~~A high-high liquid level signal from vessel RLD-VSL-00007 closes (1) the valves on piping discharging into the vessel RLD-VSL-0007, and (2) valves providing motive power to the diaphragm pumps or steam ejectors discharging to the vessel RLD-VSL-00007.~~		~~TBD~~
~~3.9.1.1.4~~	~~Verify that a low-low liquid level from the vessel RLD-VSL-00007 or vessel RLD-VSL-00008 at the required setpoint(s) (TBD) stops the RLD sample/transfer pumps (RLD-PMP-00018/19).~~ ~~Pumps – CTNs: RLD-PMP-00018, RLD-PMP-00019~~ ~~Level indicators – CTNs: TBD~~	~~(GTC)~~ ~~A low-low liquid level signal from the vessel RLD-VSL-00007 or vessel RLD-VSL-00008 stops the RLD sample/transfer pumps (RLD-PMP-00018/19).~~		~~TBD~~
~~3.9.1.1.5~~	~~Verify that a low-low liquid level signal at the required setpoint (TBD) from RLD-VSL-00002 closes ejectors valves used to facilitate transfer of effluents from RLD-VSL-00002.~~ ~~Ejectors – CTNs: RLD-EJCTR-00020A, RLD-EJCTR-00020B~~ ~~Level indicators – CTNs: RLD-LI-3024A~~	~~(GTC)~~ ~~A low-low liquid level signal from RLD-VSL-00002 closes ejectors valves used to facilitate transfer of effluents from RLD-VSL-00002.~~		~~TBD~~

Requirement ~~(para #)~~Section Number	Plan (including SSCs)*	Acceptance Criteria (TAC or GTC)*	Notes/Comments	Test Conditions
3.9.2.1	Perform a test to verify the functionality of the leak detection system for sumps in areas regulated as tank systems or ancillary equipment secondary containment.~~Verify leak detection capability for sumps (discharging to the RLD Vessels) as described in the WTP Dangerous Waste Permit.~~ ~~Sumps – CTNs: RLD-SUMP-00001, HCP-SUMP-00001, HDH-SUMP-00001, HDH-SUMP-00002, HDH-SUMP-00003, HFP-SUMP-00002, HFP-SUMP-00005, HOP-SUMP-00003, HOP-SUMP-00008, HPH-SUMP-00001, HPH-SUMP-00003, HPH-SUMP-00005, HSH-SUMP-00003, HSH-SUMP-00007, HSH-SUMP-00008, HSH-SUMP-00009.~~ **CTNs:** TBD	**(GTC)** ~~The leaks in the sumps listed are monitored and an alarm is given when a leak in sump is detected.~~ Leak detection instrumentation successfully detects and announces leak of at least 0.1 gallons per hour within 24 hours.	~~The minimum detectable level for each sump is required to establish the demonstration acceptance criteria for each sump. This level remains as TBD until radar gun vendor information is available.~~	~~TBD~~
~~3.9.2.2~~	~~Verify that a high liquid level signal from the autosampler (ASX-SAMPLR-00028) level instrumentation via PPJ stops the HWLR-RLD sample/transfer pumps (RLD-PMP-00018 and RLD-PMP-00019).~~ ~~Pumps – CTNs: RLD-PMP-00018, RLD-PMP-00019~~ ~~Autosampler – CTNs: ASX-SMPLR-00028~~ ~~Level Instruments – CTNs: TBD~~	~~(TAC)~~ ~~A high level signal from the ASX enclosure for ASX-SMPLR-00028 stops RLD sample/transfer pumps.~~		~~TBD~~
~~3.9.2.3~~	~~Verify that the HWLR-RLD sample/transfer pumps (RLD-PMP-00018 and RLD-PMP-00019) are prevented from running via signal from PPJ when valve associated with the autosampler (ASX-SAMPLR-00028) flushing are aligned for flushing.~~ ~~Pumps – CTNs: RLD-PMP-00018, RLD-PMP-00019~~ ~~Valves – CTNs: TBD~~	~~(TAC)~~ ~~When valves (TBD) are in the flushing alignment (i.e., open/closed) RLD-PMP-00018 and RLD-PMP-00019 operation cannot be initiated or stop (if currently operating).~~		~~TBD~~

Notes:
* Test acceptance criteria (TAC) are based on requirements from authorization basis documents. General test criteria (GTC) are requirements from other sources.

Attachment 4
19-ECD-0036
(3 Pages Excluding Cover Sheet)

24590-HLW-3ZN-RLD-00003

Evaluation of Lines and Equipment in Black Cell
and Hard to Reach Areas

Issued by
RPP-WTP PDC

System Design Description Change Notice

CHANGE DOCUMENT NO. 24590-HLW-3ZN-RLD-00003

JOB NO.	TITLE FOR CHANGE NOTICE
24590	Evaluation of Lines and Equipment in Black Cell and Hard to Reach Areas

DOCUMENT NUMBER	REV	DOCUMENT NUMBER	REV
24590-HLW-3ZD-RLD-00001	1		

PART OF DESIGN CHANGE PACKAGE (DCP)? ☐ Yes ☒ No

JUSTIFICATION FOR NO DCP: The sytems has not been turned over.

INCORPORATES AN EIE? ☐ Yes ☒ No If yes, list EIEs:

JUSTIFICATION FOR CHANGE

Seismic design requirements from BOD and PDSA require separation in the SDD to enhance clarity.

Supersedes Change Document ☐ Yes ☒ No

REQUIREMENTS REVIEW

Client Approval Required ☐ Yes ☒ No | Interface Resolution Required * ☐ Yes ☒ No

Address any "yes" answers in the description

DESCRIPTION OF CHANGE

Changes are added (underlined) or deleted (~~strikethrough~~) as provided in the attachment.

Change content summary detail: Revises section **3.4.2.4 Seismic Design**, to create subsections 3.4.2.4.1 *Nuclear Safety* and 3.4.2.4.2 *Black Cell and Hard to Reach Areas,* which separate the two different aspects of the original requirement.

ORIGINATOR
ORG/Discipline – Jerid Mauss

Originator
By: Jerid Mauss - jlmauss
Org Name:
Placed: Mar 26, 2019

CHECKER
Rhett Tranbarger 3/26/2019

Validation:	Mechanical Systems	Sarah Barker		3/29/19
	Organization/Area of Responsibility	*Print/Type Name*	*Signature*	*Date*
Validation:	Nuclear Safety	Mike Greutman		3/29/19
	Organization/Area of Responsibility	*Print/Type Name*	*Signature*	*Date*
Concurrence:	Manager of Engineering and Design Authority	Ian Milgate		3/29/19
	Title	*Print/Type Name*	*Signature*	*Date*
Approval:	Systems Engineering Manager	Sarah Barker		3/29/19
	Title	*Print/Type Name*	*Signature*	*Date*

3.4.2.4 Seismic Design

3.4.2.4.1 Seismic Design Categories for RLD Equipment and Piping

Requirement: ~~The~~ RLD system equipment and piping shall be designed and qualified for seismic conditions in accordance with Table 3-6, below. ~~This equipment shall be designed using revised ground motion (RGM) or WTP Site-Specific Ground Motion (WSGM).~~ [Sections 4.4.1.4.1~~, and~~ 4.4.11.1.1~~7.3.4~~ and Appendix M Table M-1, HLW PDSA] ~~[Sections 4.4.1, 16.4.2.1, 16.4.2.7, Appendix B, BOD]~~

Table 3-6 RLD System Equipment and Piping Seismic Design Categories

Description	Seismic Category	Reference
RLD B~~b~~ulge and D~~d~~rain ~~lines~~	SC-III	Appendix M, HLW PDSA
Facility-DF (shielding, includes joggles/offsets)	SC-III	Appendix M, HLW PDSA
~~RLD vessels located in black cells or hard-to-reach areas~~	~~SC-I~~	~~Section 16.4.2.1, BOD~~
~~RLD piping located in black cells~~	~~SC-I~~	~~Section 16.4.2.7, BOD~~

Basis Discussion: Section 2.4.12 of 24590-WTP-PSAR-ESH-01-002-01, *Preliminary Documented Safety Analysis to Support Construction Authorization; General Information* states the following: "All components and parts of the equipment that provide or contribute to the safety functions and accident monitoring functions, including equipment supports and anchorage, shall be qualified accordingly." This qualification ensures SSCs meet the designated seismic design requirements. The SRD, Safety Criterion 4.1-3 details the equivalence of the WTP seismic category to the seismic performance category of DOE-STD-1020-94, *Natural Phenomena Hazards Design and Evaluation Criteria for Department of Energy Facilities*. The SRD also states that SSCs designated as safety SSCs be designed to withstand the effects of NPH events (e.g., earthquakes, wind, and floods) without loss of capability to perform specified safety functions.

Verification: Verification is expected to be achieved through the following:

Verif. Method	Verif. By	Plan	Notes/Comments
A/T	**ENG /SUP**	Perform an analysis or supplier testing on equipment listed in Table 3-6 to demonstrate the capability to withstand a seismic event.	
R	**ENG**	Review the design to verify conformance to the as-tested/as-analyzed configuration.	

3.4.2.4.2 Black Cell and Hard-to-Reach Areas

Requirement: Piping within black cell and hard-to-reach areas shall be evaluated using the Seismic Category I (SC-I) design basis earthquake (DBE) to ensure it will not prevent an SC-I structure, system, or component (SSC) from performing its seismic safety function. Vessels in the black cells and hard-to-reach areas shall be evaluated using approved SC-I methods and acceptance criteria as defined in the SRD. These vessels shall be evaluated for the building response spectra resulting from the revised ground motion (RGM), unless specifically listed in Appendix B of the BOD for acceptability of use of WTP Site-Specific Ground Motion (WSGM). [Sections 4.4.1, 16.4.2.1, 16.4.2.7, Appendix B, BOD]

Basis Discussion: Vessels shall be evaluated for the building response spectra resulting from the revised ground motion (RGM) unless the consequences of continued use of RGM result in 1) hazardous work required to modify existing vessel internals, 2) increased complexity of design which can result in decreased constructability, operability, maintainability, and reliability, and/or 3) increased cost and schedule, in which case, the vessels shall be designed to the building response spectra resulting from the WTP Site-Specific Ground Motion (WSGM) as allowed by specific identification in Appendix B of the BOD.

Verification: Verification is expected to be achieved through the following:

Verif. Method	Verif. By	Plan	Notes/Comments
A/T	ENG /SUP	Perform an analysis or supplier testing on piping and vessels located in black cell and hard-to-reach areas to demonstrate the capability to withstand a seismic event.	
R	ENG	Review the design to verify conformance to the as-tested/as-analyzed configuration.	

Attachment 5
19-ECD-0036
(23 Pages Excluding Cover Sheet)

24590-LAW-3ZN-LFP-00004

Add Construction and Installation Certification Requirements to
24590-LAW-3ZD-LFP-00001

Issued by
RPP-WTP PDC

System Design Description Change Notice

CHANGE DOCUMENT NO. 24590-LAW-3ZN-LFP-00004

JOB NO.	TITLE FOR CHANGE NOTICE
24590	Add Construction and Installation Certification Requirements to 24590-LAW-3ZD-LFP-00001

DOCUMENT NUMBER	REV	DOCUMENT NUMBER	REV
24590-LAW-3ZD-LFP-00001	2		

PART OF DESIGN CHANGE PACKAGE (DCP)? ☐ Yes ☒ No

Justification for no DCP: Impacted SSC has not been turned over to the Plant Management organization.

INCORPORATES AN EIE? ☐ Yes ☒ No If yes, list EIEs:

JUSTIFICATION FOR CHANGE

Treatment, storage or disposal of dangerous waste in the LAW LCP and LFP systems cannot commence until the requirement to certify the LAW LCP and LFP systems have been constructed in accordance with the WTP Dangerous Waste Permit. The addition of Section 3.10 of the LAW LCP/LFP SDD will facilitate the development of a Special RVM to submit to Washington State Department of Ecology as proof of construction certification.

Supersedes Change Document ☐ Yes ☒ No

REQUIREMENTS REVIEW

Client Approval Required	☐ Yes	☒ No	Interface Resolution Required *	☐ Yes	☐ No

Address any "yes" answers in the description

DESCRIPTION OF CHANGE

1. Add Section 3.10 as shown in Attachment.
2. The following changes are added (underlined) or deleted (~~strikethrough~~).

- **1.5.1 Acronyms**

  SRVM specialized requirements verification matrix

- **3.1 Requirements**

  [...]The following abbreviations are used to designate the organization responsible for performing the verification:

  (ENG) Engineering
  (ENV) Environmental
  (CON) Construction
  (SU) Startup
  (COM) Commissioning[...]

- **3.~~10~~11 Relevant Codes and Standards**
- **3.~~10~~11.1 Codes of Record**
- Table 3-~~5~~15 identifies relevant external codes and standards applicable to the LCP and LFP design. Use of the *Engineering, Procurement, and Construction (EPC) Code of Record*, 24590-WTP-COR-MGT-15-00001 is typically invoked in the design process through the documents identified in Section 3.~~10~~11.2.
- **Table 3-~~5~~15 LCP and LFP System Applicable Codes & Standards**
- **3.~~10~~11.2 WTP Design Criteria, Design Guides, and General Specifications**
- Table 3-~~6~~16 identifies relevant external codes and standards applicable to the LCP and LFP Design.
- **Table 3-~~6~~16 WTP Design Criteria, Design Guides, and General Specifications Applicable to LCP and LFP.**

ORIGINATOR	CHECKER
Systems Engineering – Nathan Kippes	Rhett Tranbarger 9/18/2018

Validation: Environmental Protection — Donna Yasek — Roger Landon — 9/20/18

Organization/Area of Responsibility — *Print/Type Name* — *Signature* — *Date*

JOB NO.	TITLE FOR CHANGE NOTICE
24590	Add Construction and Installation Certification Requirements to 24590-LAW-3ZD-LFP-00001

	Title	Print/Type Name	Signature	Date
Concurrence:	N/A			
Concurrence:	Manager of Engineering and Design Authority	Ian Milgate		9/20/18
Approval:	Systems Engineering Manager	Sarah Barker		9.24.18

3.10 Dangerous Waste Permit (DWP) and Washington Administrative Code (WAC) for the LFP and LCP

The requirements delineated in this section are construction and installation certification requirements and do not include design or operational requirements. These WTP construction certification requirements will document that the WTP Dangerous Waste Management Units have been constructed in accordance with the WTP – Operating Unit Group 10 DWP requirements, Permit Number WA7890008967, Condition III.10.C.2.a and Washington Administrative Code (WAC) 173-303-810(14)(a).

3.10.1 Melter 1 Feed Preparation Vessel and Feed Vessel (LFP-VSL-00001 and LFP-VSL-00002)

3.10.1.1 Vessels Handling and Installation Procedures (LFP-VSL-00001 and LFP-VSL-00002)

Requirement: The installation of the melter 1 feed preparation vessel and feed vessel shall be performed with proper handling procedures to prevent damage to the system during installation. Prior to covering, enclosing, or placing the melter 1 feed preparation vessel and feed vessel systems or component, an independent, qualified installation inspector or an independent, qualified, registered professional engineer, either of whom is trained and experienced in the proper installation of tank systems or components, must inspect the system as specified in WAC 173-303-640 (3)(c), WAC 173-303-640 (3)(h).

- Inspection activities include:
    - Testing tanks for tightness
    - Verifying protection of ancillary equipment against physical damage and stress
    - Evaluating evidence of corrosion
- Specify and document the handling or installation procedures to protect the integrity of the tank system. The procedures should prevent or detect the following defects:
    - weld breaks (WAC 173-303-640 (3)(c)(i))
    - punctures (WAC 173-303-640 (3)(c)(ii))
    - scrapes of protective coatings (WAC 173-303-640 (3)(c)(iii))
    - cracks (WAC 173-303-640 (3)(c)(iv))
    - corrosion (WAC 173-303-640 (3)(c)(v))
    - other structural damage or inadequate construction or installation (WAC 173-303-640(3)(c)(vi))
- Specify and document the remedies for any handling or installation procedure discrepancies identified before the tank system is covered, enclosed, or placed in use. (WAC 173-303-640(3)(c))

[Section III.10.E.3.a, Chp. 4.0, Section 4.2.5, DWP]

Basis Discussion: This requirement is derived from the Washington Administrative Code (WAC) Dangerous Waste Regulations at WAC Chapter 173-303, specifically the Tank System regulations in WAC 173-303-640. These regulatory requirements have been incorporated into the Dangerous Waste Permit, WTP- Operating Unit Group 10, WA 7890008967, as permit condition III.10.E.3.a (WAC 173-303-640(3)(c), WAC 173-303-640(3)(h)).

Verification: Construction/installation verification is expected to be achieved through the following:

Verif. Method	Verif. By	Plan	Notes/Comments
R/I	**ENV**	Review completed independent, qualified, installation inspector installation packages.	

Verif. Method	Verif. By	Plan	Notes/Comments
		Perform walkdown as necessary to complete verification	

3.10.1.2 System Installation Inspection (LFP-VSL-00001 and LFP-VSL-00002)

Requirement: The independent tank system installation inspection and subsequent written statements will be certified pursuant to Permit Condition III.10.E.1.d., comply with all requirements of WAC 173-303-640(3)(h) and will consider, but not be limited to, the following tank system installation documentation:

- Field installation report with date of installation;
- Approved welding procedures;
- Welder qualifications and certification;
- Hydro-test reports, as applicable, in accordance with the American Society of Mechanical Engineers Boiler and Pressure Vessel Code, Section VIII, Division 1, American Petroleum Institute (API) Standard 620, or Standard 650 as applicable;
- Tester credentials;
- Field inspector credentials;
- Field inspector reports;
- Field waiver reports; and
- Non-compliance reports and corrective action (including field waiver reports) and repair reports.

[Section III.10.E.3.g, DWP]

Basis Discussion: None.

Verification: Construction/installation verification is expected to be achieved through the following:

Verif. Method	Verif. By	Plan	Notes/Comments
R/I	**ENV**	Review completed independent, qualified, installation inspector installation packages. Perform walkdown as necessary to complete verification	

3.10.1.3 Vessel Construction (LFP-VSL-00001 and LFP-VSL-00002)

Requirement: The Permittees will construct the melter 1 feed preparation tanks listed in Permit Table III.10.E.B (Table 3-5), as approved/modified pursuant to Permit Condition III.10.H.5, as specified in Permit Condition III.10.H.1. and Operating Unit Group 10, Chapter 4 of this Permit, and Operating Unit Group 10, Appendices 9.1 through 9.15 and 9.17 of this Permit, as approved pursuant to Permit Conditions III.10.H.5.a. through d., and III.10.H.5.f.

Table 3-5 Melter 1 Feed Preparation Vessel and Feed Vessel Construction

Vessel Number/Location	Description	Material	Total Volume (US Gallons)	Approximate Dimensions (Inside Diameter) x Height or Length in feet and inches (tangent line/tangent line)
LFP-VSL-00001 L-0123	Melter 1 Feed Preparation Vessel	Stainless Steel	9,123	11 ft. x 10 ft. 6 in.
LFP-VSL-00002 L-0123	Melter 1 Feed Vessel	Stainless Steel	9,123	11 ft. x 10 ft. 6 in.

[Sections III.10.H.1.a.i, III.10.H.1.a.ii, Table III.10.E.B, Chp. 4E, Table 4E-1, DWP]

Basis Discussion: Locations, dimensions, capacities, material and appurtenances is provided in DWP Table 4E-1.

Verification: Construction/installation verification is expected to be achieved through the following:

Verif. Method	Verif. By	Plan	Notes/Comments
R/I	**ENV**	Perform a review of the design to verify the material of construction, dimensions and location. Perform walkdown as necessary to complete verification	

3.10.1.4 Vapor Collection System (LFP-VSL-00001 and LFP-VSL-00002)

Requirement: The melter 1 feed preparation vessel and feed vessel systems is constructed with features that prevent escape of vapors, fumes, or other emissions into the air. [Section III.10.E.9.c.xii, DWP]

Basis Discussion: This requirement is derived from the Washington Administrative Code (WAC) Dangerous Waste Regulations at WAC Chapter 173-303, specifically the Tank System regulations in WAC 173-303-640. These regulatory requirements have been incorporated into the Dangerous Waste Permit, WTP- Operating Unit Group 10, WA 7890008967, as permit condition III.10.E.9.c.xii (WAC 173-303-640(5)(e)).

Verification: Construction/installation verification is expected to be achieved through the following:

Verif. Method	Verif. By	Plan	Notes/Comments
R/I	**ENV**	Review tank system as-built P&IDs/V&IDs to verify that process vapors are appropriately treated prior to release to the environment. Perform walkdown as necessary to complete verification	

3.10.1.5 Tightness Testing (LFP-VSL-00001 and LFP-VSL-00002)

Requirement: The Permittees must test for tightness for the melter 1 feed preparation vessel and feed vessel systems prior to these components being covered, enclosed, or placed into use. If a tank system is found not to be

tight, all repairs necessary to remedy the leak(s) in the system must be performed prior to the tank system being covered, enclosed, or placed in use. [Section III.10.E.3.c, DWP]

Basis Discussion: This requirement is derived from the Washington Administrative Code (WAC) Dangerous Waste Regulations at WAC Chapter 173-303, specifically the Tank System regulations in WAC 173-303-640. These regulatory requirements have been incorporated into the Dangerous Waste Permit, WTP- Operating Unit Group 10, WA 7890008967, as permit condition III.10.E.3.c.

Verification: Construction/installation verification is expected to be achieved through the following:

Verif. Method	Verif. By	Plan	Notes/Comments
R/I	**ENV**	Review completed independent, qualified, installation inspector installation packages. Perform walkdown as necessary to complete verification	

3.10.1.6 Melter 1 Feed Preparation Vessel and Feed Vessel Overflow Prevention Controls (LFP-VSL-00001 and LFP-VSL-00002)

Requirement: The melter 1 feed preparation vessel and feed vessel shall be constructed with the appropriate instrumentation to allow for the control and prevention of overflow from the tank or containment systems. See Table 3-6 for the overflow instruments.

Table 3-6 Melter 1 Feed Preparation Vessel and Feed Vessel Overflow Prevention Controls

Monitoring Control Parameter	Type of Instrument/Control Device	Instrument/Control Device Tag Number
Level Measurement for LFP-VSL-00001	Level Element	LFP-LE-1124
	Level Transmitter	LFP-LT-1124
	Level Indicator	LFP-LI-1124
	Level Element	LFP-LE-1140
	Level Transmitter	LFP-LT-1140
	Level Indicator	LFP-LI-1140
	High Level Select	LFP-HS-1124
	Level Indicator (Gallons)	LFP-LI-l124A
	Level Alarm High High	LFP-LAHH-l124A
	Level Alarm High	LFP-LAH-l124A
	Level Alarm Low	LFP-LAL-l124A
	Level Alarm Low Low	LFP-LALL-1124A
	Level Alarm Low Low Low	LFP-LALLL-1124A
Level Measurement for LFP-VSL- 00002	Level Element	LFP-LE-1146
	Level Transmitter	LFP-LT-1146
	Level Indicator	LFP-LI-1146
	Level Indicator (Gallons)	LFP-LI-l146A
	Level Alarm High High	LFP-LAHH-l146A
	Level Alarm High	LFP-LAH-l146A
	Level Alarm Low	LFP-LAL-l146A
	Level Alarm Low Low	LFP-LALL-l146A
	Level Alarm Low Low Low	LFP-LALLL-1146A

[Section III.10.E.5.d, III.10.H.1.a.xvii, DWP]

Basis Discussion: Table 3-6 is developed from 24590-LAW-PER-J-03-001, *System Logic Description for Low-Activity Waste Facility – LAW Melter Feed Process System (LFP)*. This requirement is derived from the Washington Administrative Code (WAC) Dangerous Waste Regulations at WAC Chapter 173-303, specifically the Tank System regulations in WAC 173-303-640(5)(b). These regulatory requirements have been incorporated into the Dangerous Waste Permit, WTP- Operating Unit Group 10, WA 7890008967, as permit conditions III.10.E.5.d and III.10.H.1.a.xvii.

Verification: Construction/installation verification is expected to be achieved through the following:

Verif. Method	Verif. By	Plan	Notes/Comments
R/I	**ENV**	Review completed independent, qualified, installation inspector installation packages. Perform walkdown as necessary to complete verification	

3.10.1.7 Support and Protect Ancillary Equipment (LFP-VSL-00001 and LFP-VSL-00002)

Requirement: Melter 1 feed preparation vessel and feed vessel ancillary equipment shall be supported and protected against physical damage and excessive stress due to settlement, vibration, expansion, or contraction. (WAC 173-303-640(3)(f)). [Section III.10.E.3.d, DWP]

Basis Discussion: This requirement is derived from the Washington Administrative Code (WAC) Dangerous Waste Regulations at WAC Chapter 173-303, specifically the Tank System regulations in WAC 173-303-640. These regulatory requirements have been incorporated into the Dangerous Waste Permit, WTP- Operating Unit Group 10, WA 7890008967, as permit condition III.10.E.3.d.

Verification: Construction/installation verification is expected to be achieved through the following:

Verif. Method	Verif. By	Plan	Notes/Comments
R/I	**ENV**	Review completed independent, qualified, installation inspector installation packages. Perform walkdown as necessary to complete verification	

3.10.2 Melter 2 Feed Preparation Vessel and Feed Vessel (LFP-VSL-00003 and LFP-VSL-00004)

3.10.2.1 Vessels Handling and Installation Procedures (LFP-VSL-00003 and LFP-VSL-00004)

Requirement: The installation of the melter 2 feed preparation vessel and feed vessel shall be performed with proper handling procedures to prevent damage to the system during installation. Prior to covering, enclosing, or placing the melter 2 feed preparation vessel and feed vessel systems or component, an independent, qualified installation inspector or an independent, qualified, registered professional engineer, either of whom is trained and experienced in the proper installation of tank systems or components, must inspect the system as specified in WAC 173-303-640 (3)(c), WAC 173-303-640 (3)(h).

- Inspection activities include:
    - Testing tanks for tightness
    - Verifying protection of ancillary equipment against physical damage and stress
    - Evaluating evidence of corrosion

- Specify and document the handling or installation procedures to protect the integrity of the tank system. The procedures should prevent or detect the following defects:
    - weld breaks (WAC 173-303-640 (3)(c)(i))
    - punctures (WAC 173-303-640 (3)(c)(ii))
    - scrapes of protective coatings (WAC 173-303-640 (3)(c)(iii))
    - cracks (WAC 173-303-640 (3)(c)(iv))
    - corrosion (WAC 173-303-640 (3)(c)(v))
    - other structural damage or inadequate construction or installation (WAC 173-303-640(3)(c)(vi))
- Specify and document the remedies for any handling or installation procedure discrepancies identified before the tank system is covered, enclosed, or placed in use. (WAC 173-303-640(3)(c))

[Section III.10.E.3.a, Chp. 4.0, Section 4.2.5, DWP]

Basis Discussion: This requirement is derived from the Washington Administrative Code (WAC) Dangerous Waste Regulations at WAC Chapter 173-303, specifically the Tank System regulations in WAC 173-303-640. These regulatory requirements have been incorporated into the Dangerous Waste Permit, WTP- Operating Unit Group 10, WA 7890008967, as permit condition III.10.E.3.a (WAC 173-303-640(3)(c), WAC 173-303-640(3)(h)).

Verification: Construction/installation verification is expected to be achieved through the following:

Verif. Method	Verif. By	Plan	Notes/Comments
R/I	**ENV**	Review completed independent, qualified, installation inspector installation packages. Perform walkdown as necessary to complete verification	

3.10.2.2 System Installation Inspection (LFP-VSL-00003 and LFP-VSL-00004)

Requirement: The independent tank system installation inspection and subsequent written statements will be certified pursuant to Permit Condition III.10.E.1.d., comply with all requirements of WAC 173-303-640(3)(h) and will consider, but not be limited to, the following tank system installation documentation:

- Field installation report with date of installation;
- Approved welding procedures;
- Welder qualifications and certification;
- Hydro-test reports, as applicable, in accordance with the American Society of Mechanical Engineers Boiler and Pressure Vessel Code, Section VIII, Division 1, American Petroleum Institute (API) Standard 620, or Standard 650 as applicable;
- Tester credentials;
- Field inspector credentials;
- Field inspector reports;
- Field waiver reports; and
- Non-compliance reports and corrective action (including field waiver reports) and repair reports.

[Section III.10.E.3.g, DWP]

Basis Discussion: None.

Verification: Construction/installation verification is expected to be achieved through the following:

Verif. Method	Verif. By	Plan	Notes/Comments
R/I	**ENV**	Review completed independent, qualified, installation inspector installation packages. Perform walkdown as necessary to complete verification	

3.10.2.3 Vessel Construction (LFP-VSL-00003 and LFP-VSL-00004)

Requirement: The Permittees will construct the melter 2 feed preparation vessels and feed vessel systems listed in Permit Table III.10.E.B (Table 3-7), as approved/modified pursuant to Permit Condition III.10.H.5, as specified in Permit Condition III.10.H.1. and Operating Unit Group 10, Chapter 4 of this Permit, and Operating Unit Group 10, Appendices 9.1 through 9.15 and 9.17 of this Permit, as approved pursuant to Permit Conditions III.10.H.5.a. through d., and III.10.H.5.f.

Table 3-7 Melter 2 Feed Preparation Vessel and Feed Vessel Construction

Vessel Number/Location	Description	Material	Total Volume (US Gallons)	Approximate Dimensions (Inside Diameter) x Height or Length in feet and inches (tangent line/tangent line)
LFP-VSL-00003 L-0124	Melter 2 Feed Preparation Vessel	Stainless Steel	9,123	11 ft. x 10 ft. 6 in.
LFP-VSL-00004 L-0124	Melter 2 Feed Vessel	Stainless Steel	9,123	11 ft. x 10 ft. 6 in.

[Sections III.10.H.1.a.i, III.10.H.1.a.ii, Table III.10.E.B, Chp. 4E, Table 4E-1, DWP]

Basis Discussion: Locations, dimensions, capacities, material and appurtenances is provided in DWP Tables 4E-1.

Verification: Construction/installation verification is expected to be achieved through the following:

Verif. Method	Verif. By	Plan	Notes/Comments
R/I	**ENV**	Perform a review of the design to verify the material of construction, dimensions and location. Perform walkdown as necessary to complete verification	

3.10.2.4 Vapor Collection System (LFP-VSL-00003 and LFP-VSL-00004)

Requirement: The melter 2 feed preparation vessel and feed vessel systems is constructed with features that prevent escape of vapors, fumes, or other emissions into the air. [Section III.10.E.9.c.xii, DWP]

Basis Discussion: This requirement is derived from the Washington Administrative Code (WAC) Dangerous Waste Regulations at WAC Chapter 173-303, specifically the Tank System regulations in WAC 173-303-640.

These regulatory requirements have been incorporated into the Dangerous Waste Permit, WTP- Operating Unit Group 10, WA 7890008967, as permit condition III.10.E.9.c.xii (WAC 173-303-640(5)(e)).

Verification: Construction/installation verification is expected to be achieved through the following:

Verif. Method	Verif. By	Plan	Notes/Comments
R/I	**ENV**	Review tank system as-built P&IDs/V&IDs to verify that process vapors are appropriately treated prior to release to the environment. Perform walkdown as necessary to complete verification	

3.10.2.5 Tightness Testing (LFP-VSL-00003 and LFP-VSL-00004)

Requirement: The Permittees must test for tightness for the melter 2 feed preparation vessel and feed vessel systems prior to these components being covered, enclosed, or placed into use. If a tank system is found not to be tight, all repairs necessary to remedy the leak(s) in the system must be performed prior to the tank system being covered, enclosed, or placed in use. [Section III.10.E.3.c, DWP]

Basis Discussion: This requirement is derived from the Washington Administrative Code (WAC) Dangerous Waste Regulations at WAC Chapter 173-303, specifically the Tank System regulations in WAC 173-303-640. These regulatory requirements have been incorporated into the Dangerous Waste Permit, WTP- Operating Unit Group 10, WA 7890008967, as permit condition III.10.E.3.c.

Verification: Construction/installation verification is expected to be achieved through the following:

Verif. Method	Verif. By	Plan	Notes/Comments
R/I	**ENV**	Review completed independent, qualified, installation inspector installation packages. Perform walkdown as necessary to complete verification	

3.10.2.6 Melter 2 Feed Preparation Vessel and Feed Vessel Overflow Prevention Controls (LFP-VSL-00003 and LFP-VSL-00004)

Requirement: The melter 2 feed preparation vessel and feed vessel shall be constructed with the appropriate instrumentation to allow for the control and prevention of overflow from the tank or containment systems. See Table 3-8 for the overflow instruments.

Table 3-8 Melter 2 Feed Preparation Vessel and Feed Vessel Overflow Prevention Controls

Monitoring Control Parameter	Type of Instrument/Control Device	Instrument/control Device Tag Number
Level Measurement for LFP-VSL-00003	Level Element	LFP-LE-2124
	Level Transmitter	LFP-LT-2124
	Level Indicator	LFP-LI-2124
	Level Element	LFP-LE-2140
	Level Transmitter	LFP-LT-2140
	Level Indicator	LFP-LI-2140
	High Level Select	LFP-HS-2124

Monitoring Control Parameter	Type of Instrument/Control Device	Instrument/control Device Tag Number
	Level Indicator (Gallons)	LFP-LI-2124A
	Level Alarm High High	LFP-LAHH-2124A
	Level Alarm High	LFP-LAH-2124A
	Level Alarm Low	LFP-LAL-2124A
	Level Alarm Low Low	LFP-LALL-2124A
	Level Alarm Low Low Low	LFP-LALLL-2124A
Level Measurement for LFP-VSL-00004	Level Element	LFP-LE-2146
	Level Transmitter	LFP-LT-2146
	Level Indicator	LFP-LI-2146
	Level Indicator (Gallons)	LFP-LI-2146A
	Level Alarm High High	LFP-LAHH-2146A
	Level Alarm High	LFP-LAH-2146A
	Level Alarm Low	LFP-LAL-2146A
	Level Alarm Low Low	LFP-LALL-2146A
	Level Alarm Low Low Low	LFP-LALLL-2146A

[Section III.10.E.5.d, III.10.H.1.a.xvii, DWP]

Basis Discussion: Table 3-8 is developed from 24590-LAW-PER-J-03-001, *System Logic Description for Low-Activity Waste Facility – LAW Melter Feed Process System (LFP)*. This requirement is derived from the Washington Administrative Code (WAC) Dangerous Waste Regulations at WAC Chapter 173-303, specifically the Tank System regulations in WAC 173-303-640(5)(b). These regulatory requirements have been incorporated into the Dangerous Waste Permit, WTP- Operating Unit Group 10, WA 7890008967, as permit conditions III.10.E.5.d and III.10.H.1.a.xvii.

Verification: Construction/installation verification is expected to be achieved through the following:

Verif. Method	Verif. By	Plan	Notes/Comments
R/I	**ENV**	Review completed independent, qualified, installation inspector installation packages. Perform walkdown as necessary to complete verification	

3.10.2.7 Support and Protect Ancillary Equipment (LFP-VSL-00003 and LFP-VSL-00004)

Requirement: Melter 2 feed preparation vessel and feed vessel ancillary equipment shall be supported and protected against physical damage and excessive stress due to settlement, vibration, expansion, or contraction. (WAC 173-303-640(3)(f)). [Section III.10.E.3.d, DWP]

Basis Discussion: This requirement is derived from the Washington Administrative Code (WAC) Dangerous Waste Regulations at WAC Chapter 173-303, specifically the Tank System regulations in WAC 173-303-640. These regulatory requirements have been incorporated into the Dangerous Waste Permit, WTP- Operating Unit Group 10, WA 7890008967, as permit condition III.10.E.3.d.

Verification: Construction/installation verification is expected to be achieved through the following:

Verif. Method	Verif. By	Plan	Notes/Comments
R/I	**ENV**	Review completed independent, qualified, installation inspector installation packages. Perform walkdown as necessary to complete verification	

3.10.3 Melter 1 Concentrate Receipt Vessel (LCP-VSL-00001)

3.10.3.1 Vessels Handling and Installation Procedures (LCP-VSL-00001)

Requirement: The installation of the melter 1 concentrate receipt vessel shall be performed with proper handling procedures to prevent damage to the system during installation. Prior to covering, enclosing, or placing the melter 1 concentrate receipt vessel system or component, an independent, qualified installation inspector or an independent, qualified, registered professional engineer, either of whom is trained and experienced in the proper installation of tank systems or components, must inspect the system as specified in WAC 173-303-640 (3)(c), WAC 173-303-640 (3)(h)

- Inspection activities include:
    - Testing tanks for tightness
    - Verifying protection of ancillary equipment against physical damage and stress
    - Evaluating evidence of corrosion
- Specify and document the handling or installation procedures to protect the integrity of the tank system. The procedures should prevent or detect the following defects:
    - weld breaks (WAC 173-303-640 (3)(c)(i))
    - punctures (WAC 173-303-640 (3)(c)(ii))
    - scrapes of protective coatings (WAC 173-303-640 (3)(c)(iii))
    - cracks (WAC 173-303-640 (3)(c)(iv))
    - corrosion (WAC 173-303-640 (3)(c)(v))
    - other structural damage or inadequate construction or installation (WAC 173-303-640(3)(c)(vi))
- Specify and document the remedies for any handling or installation procedure discrepancies identified before the tank system is covered, enclosed, or placed in use. (WAC 173-303-640(3)(c))

[Section III.10.E.3.a, Chp. 4.0, Section 4.2.5, DWP]

Basis Discussion: This requirement is derived from the Washington Administrative Code (WAC) Dangerous Waste Regulations at WAC Chapter 173-303, specifically the Tank System regulations in WAC 173-303-640. These regulatory requirements have been incorporated into the Dangerous Waste Permit, WTP- Operating Unit Group 10, WA 7890008967, as permit condition III.10.E.3.a (WAC 173-303-640(3)(c), WAC 173-303-640(3)(h)).

Verification: Construction/installation verification is expected to be achieved through the following:

Verif. Method	Verif. By	Plan	Notes/Comments
R/I	**ENV**	Review completed independent, qualified, installation inspector installation packages.	

Verif. Method	Verif. By	Plan	Notes/Comments
		Perform walkdown as necessary to complete verification	

3.10.3.2 System Installation Inspection (LCP-VSL-00001)

Requirement: The independent tank system installation inspection and subsequent written statements will be certified pursuant to Permit Condition III.10.E.1.d., comply with all requirements of WAC 173-303-640(3)(h) and will consider, but not be limited to, the following tank system installation documentation:

- Field installation report with date of installation;
- Approved welding procedures;
- Welder qualifications and certification;
- Hydro-test reports, as applicable, in accordance with the American Society of Mechanical Engineers Boiler and Pressure Vessel Code, Section VIII, Division 1, American Petroleum Institute (API) Standard 620, or Standard 650 as applicable;
- Tester credentials;
- Field inspector credentials;
- Field inspector reports;
- Field waiver reports; and
- Non-compliance reports and corrective action (including field waiver reports) and repair reports.

[Section III.10.E.3.g, DWP]

Basis Discussion: None.

Verification: Construction/installation verification is expected to be achieved through the following:

Verif. Method	Verif. By	Plan	Notes/Comments
R/I	**ENV**	Review completed independent, qualified, installation inspector installation packages. Perform walkdown as necessary to complete verification	

3.10.3.3 Vessel Construction (LCP-VSL-00001)

Requirement: The Permittees will construct the melter 1 concentrate receipt vessel listed in Permit Table III.10.E.B (Table 3-9), as approved/modified pursuant to Permit Condition III.10.H.5, as specified in Permit Condition III.10.H.1. and Operating Unit Group 10, Chapter 4 of this Permit, and Operating Unit Group 10, Appendices 9.1 through 9.15 and 9.17 of this Permit, as approved pursuant to Permit Conditions III.10.H.5.a. through d., and III.10.H.5.f.

Table 3-9 Melter 1 Concentrate Receipt Vessel Construction

Vessel Number/Location	Description	Material	Total Volume (US Gallons)	Approximate Dimensions (Inside Diameter) x Height or Length in feet and inches (tangent line/tangent line)
LCP-VSL-00001 L-0123	LAW Melter 1 Concentrate Receipt Vessel	Stainless Steel	18,130	14 ft. x 12 ft. 9 in.

[Sections III.10.H.1.a.i, III.10.H.1.a.ii, Table III.10.E.B, Chp. 4E, Table 4E-1, DWP]

Basis Discussion: Locations, dimensions, capacities, material and appurtenances is provided in DWP Tables 4E-1.

Verification: Construction/installation verification is expected to be achieved through the following:

Verif. Method	Verif. By	Plan	Notes/Comments
R/I	**ENV**	Perform a review of the design to verify the material of construction, dimensions and location. Perform walkdown as necessary to complete verification	

3.10.3.4 Vapor Collection System (LCP-VSL-00001)

Requirement: The melter 1 concentrate receipt vessel system is constructed with features that prevent escape of vapors, fumes, or other emissions into the air. [Section III.10.E.9.c.xii, DWP]

Basis Discussion: This requirement is derived from the Washington Administrative Code (WAC) Dangerous Waste Regulations at WAC Chapter 173-303, specifically the Tank System regulations in WAC 173-303-640. These regulatory requirements have been incorporated into the Dangerous Waste Permit, WTP- Operating Unit Group 10, WA 7890008967, as permit condition III.10.E.9.c.xii (WAC 173-303-640(5)(e)).

Verification: Construction/installation verification is expected to be achieved through the following:

Verif. Method	Verif. By	Plan	Notes/Comments
R/I	**ENV**	Review tank system as-built P&IDs/V&IDs to verify that process vapors are appropriately treated prior to release to the environment. Perform walkdown as necessary to complete verification	

3.10.3.5 Tightness Testing (LCP-VSL-00001)

Requirement: The Permittees must test for tightness for the melter 1 concentrate receipt vessel system prior to these components being covered, enclosed, or placed into use. If a tank system is found not to be tight, all repairs

necessary to remedy the leak(s) in the system must be performed prior to the tank system being covered, enclosed, or placed in use. [Section III.10.E.3.c, DWP]

Basis Discussion: This requirement is derived from the Washington Administrative Code (WAC) Dangerous Waste Regulations at WAC Chapter 173-303, specifically the Tank System regulations in WAC 173-303-640. These regulatory requirements have been incorporated into the Dangerous Waste Permit, WTP- Operating Unit Group 10, WA 7890008967, as permit condition III.10.E.3.c.

Verification: Construction/installation verification is expected to be achieved through the following:

Verif. Method	Verif. By	Plan	Notes/Comments
R/I	**ENV**	Review completed independent, qualified, installation inspector installation packages. Perform walkdown as necessary to complete verification	

3.10.3.6 Melter 1 Concentrate Receipt Vessel Overflow Prevention Controls (LCP-VSL-00001)

Requirement: The melter 1 concentrate receipt vessel shall be constructed with the appropriate instrumentation to allow for the control and prevention of overflow from the tank or containment systems. See Table 3-10 for the overflow instruments.

Table 3-10 Melter 1 Concentrate Receipt Vessel Overflow Prevention Controls

Monitoring/Control Parameter	Type of Instrument/Control Device	Device Tag Number
Level Measurement for LCP-VSL-00001	Level Element	LCP-LE-0139
	Level Transmitter	LCP-LT-0139
	Level Indicator	LCP-LI-0139
	Level Element	LCP-LE-0131
	Level Transmitter	LCP-LT-0131
	Level Indicator	LCP-LI-0131
	High Level Select	LCP-HS-0131
	Level Indicator (Gallons)	LCP-LI-0131A
	Level Alarm High High	LCP-LAHH-0131A
	Level Alarm High	LCP-LAH-0131A
	Level Alarm Low	LCP-LAL-0131A
	Level Alarm Low Low	LCP-LALL-0131A
	Level Alarm Low Low Low	LCP-LALLL-0131A

[Sections III.10.E.5.d, III.10.H.1.a.xvii, DWP]

Basis Discussion: Table 3-10 is developed from 24590-LAW-PER-J-03-002, *System Logic Description for Low-Activity Waste Facility – LAW Concentrate Receipt Process System (LCP)*. This requirement is derived from the Washington Administrative Code (WAC) Dangerous Waste Regulations at WAC Chapter 173-303, specifically the Tank System regulations in WAC 173-303-640(5)(b). These regulatory requirements have been incorporated into the Dangerous Waste Permit, WTP- Operating Unit Group 10, WA 7890008967, as permit conditions III.10.E.5.d and III.10.H.1.a.xvii.

Verification: Construction/installation verification is expected to be achieved through the following:

Verif. Method	Verif. By	Plan	Notes/Comments
R/I	**ENV**	Review completed independent, qualified, installation inspector installation packages. Perform walkdown as necessary to complete verification	

3.10.3.7 Support and Protect Ancillary Equipment (LCP-VSL-00001)

Requirement: Melter 1 concentrate receipt vessel ancillary equipment shall be supported and protected against physical damage and excessive stress due to settlement, vibration, expansion, or contraction. (WAC 173-303-640(3)(f)). [Section III.10.E.3.d, DWP]

Basis Discussion: This requirement is derived from the Washington Administrative Code (WAC) Dangerous Waste Regulations at WAC Chapter 173-303, specifically the Tank System regulations in WAC 173-303-640. These regulatory requirements have been incorporated into the Dangerous Waste Permit, WTP- Operating Unit Group 10, WA 7890008967, as permit condition III.10.E.3.d.

Verification: Construction/installation verification is expected to be achieved through the following:

Verif. Method	Verif. By	Plan	Notes/Comments
R/I	**ENV**	Review completed independent, qualified, installation inspector installation packages. Perform walkdown as necessary to complete verification	

3.10.4 Melter 2 Concentrate Receipt Vessel (LCP-VSL-00002)

3.10.4.1 Vessels Handling and Installation Procedures (LCP-VSL-00002)

Requirement: The installation of the melter 2 concentrate receipt vessel shall be performed with proper handling procedures to prevent damage to the system during installation. Prior to covering, enclosing, or placing the melter 2 concentrate receipt vessel system or component, an independent, qualified installation inspector or an independent, qualified, registered professional engineer, either of whom is trained and experienced in the proper installation of tank systems or components, must inspect the system as specified in WAC 173-303-640 (3)(c), WAC 173-303-640 (3)(h).

- Inspection activities include:
    - Testing tanks for tightness
    - Verifying protection of ancillary equipment against physical damage and stress
    - Evaluating evidence of corrosion
- Specify and document the handling or installation procedures to protect the integrity of the tank system. The procedures should prevent or detect the following defects:
    - weld breaks (WAC 173-303-640 (3)(c)(i))
    - punctures (WAC 173-303-640 (3)(c)(ii))
    - scrapes of protective coatings (WAC 173-303-640 (3)(c)(iii))
    - cracks (WAC 173-303-640 (3)(c)(iv))

  - corrosion (WAC 173-303-640 (3)(c)(v))
  - other structural damage or inadequate construction or installation (WAC 173-303-640(3)(c)(vi))
- Specify and document the remedies for any handling or installation procedure discrepancies identified before the tank system is covered, enclosed, or placed in use. (WAC 173-303-640(3)(c))

[Section III.10.E.3.a, Chp. 4.0, Section 4.2.5, DWP]

Basis Discussion: This requirement is derived from the Washington Administrative Code (WAC) Dangerous Waste Regulations at WAC Chapter 173-303, specifically the Tank System regulations in WAC 173-303-640. These regulatory requirements have been incorporated into the Dangerous Waste Permit, WTP- Operating Unit Group 10, WA 7890008967, as permit condition III.10.E.3.a (WAC 173-303-640(3)(c), WAC 173-303-640(3)(h)).

Verification: Construction/installation verification is expected to be achieved through the following:

Verif. Method	Verif. By	Plan	Notes/Comments
R/I	**ENV**	Review completed independent, qualified, installation inspector installation packages. Perform walkdown as necessary to complete verification	

3.10.4.2 System Installation Inspection (LCP-VSL-00002)

Requirement: The independent tank system installation inspection and subsequent written statements will be certified pursuant to Permit Condition III.10.E.1.d., comply with all requirements of WAC 173-303-640(3)(h) and will consider, but not be limited to, the following tank system installation documentation:

- Field installation report with date of installation;
- Approved welding procedures;
- Welder qualifications and certification;
- Hydro-test reports, as applicable, in accordance with the American Society of Mechanical Engineers Boiler and Pressure Vessel Code, Section VIII, Division 1, American Petroleum Institute (API) Standard 620, or Standard 650 as applicable;
- Tester credentials;
- Field inspector credentials;
- Field inspector reports;
- Field waiver reports; and
- Non-compliance reports and corrective action (including field waiver reports) and repair reports.

[Section III.10.E.3.g, DWP]

Basis Discussion: None.

Verification: Construction/installation verification is expected to be achieved through the following:

Verif. Method	Verif. By	Plan	Notes/Comments
R/I	**ENV**	Review completed independent, qualified, installation inspector installation packages.	

Verif. Method	Verif. By	Plan	Notes/Comments
		Perform walkdown as necessary to complete verification	

3.10.4.3 Vessel Construction (LCP-VSL-00002)

Requirement: The Permittees will construct the melter 2 concentrate receipt vessel listed in Permit Table III.10.E.B (Table 3-11), as approved/modified pursuant to Permit Condition III.10.H.5, as specified in Permit Condition III.10.H.1. and Operating Unit Group 10, Chapter 4 of this Permit, and Operating Unit Group 10, Appendices 9.1 through 9.15 and 9.17 of this Permit, as approved pursuant to Permit Conditions III.10.H.5.a. through d., and III.10.H.5.f.

Table 3-11 Melter 2 Concentrate Receipt Vessel Construction

Vessel Number/Location	Description	Material	Total Volume (US Gallons)	Approximate Dimensions (Inside Diameter) x Height or Length in feet and inches (tangent line/tangent line)
LCP-VSL-00002 L-0124	LAW Melter 2 Concentrate Receipt Vessel	Stainless Steel	18,130	14 ft. x 12 ft. 9 in.

[Sections III.10.H.1.a.i, III.10.H.1.a.ii, Table III.10.E.B, Chp. 4E, Table 4E-1, DWP]

Basis Discussion: Locations, dimensions, capacities, material and appurtenances is provided in DWP Tables 4E-1.

Verification: Construction/installation verification is expected to be achieved through the following:

Verif. Method	Verif. By	Plan	Notes/Comments
R/I	**ENV**	Perform a review of the design to verify the material of construction, dimensions and location. Perform walkdown as necessary to complete verification	

3.10.4.4 Vapor Collection System (LCP-VSL-00002)

Requirement: The melter 2 concentrate receipt vessel system is constructed with features that prevent escape of vapors, fumes, or other emissions into the air. [Section III.10.E.9.c.xii, DWP]

Basis Discussion: This requirement is derived from the Washington Administrative Code (WAC) Dangerous Waste Regulations at WAC Chapter 173-303, specifically the Tank System regulations in WAC 173-303-640. These regulatory requirements have been incorporated into the Dangerous Waste Permit, WTP- Operating Unit Group 10, WA 7890008967, as permit condition III.10.E.9.c.xii (WAC 173-303-640(5)(e)).

Verification: Construction/installation verification is expected to be achieved through the following:

Verif. Method	Verif. By	Plan	Notes/Comments
R/I	**ENV**	Review tank system as-built P&IDs/V&IDs to verify that process vapors are appropriately treated prior to release to the environment. Perform walkdown as necessary to complete verification	

3.10.4.5 Tightness Testing (LCP-VSL-00002)

Requirement: The Permittees must test for tightness for the melter 2 concentrate receipt vessel system prior to these components being covered, enclosed, or placed into use. If a tank system is found not to be tight, all repairs necessary to remedy the leak(s) in the system must be performed prior to the tank system being covered, enclosed, or placed in use. [Section III.10.E.3.c, DWP]

Basis Discussion: This requirement is derived from the Washington Administrative Code (WAC) Dangerous Waste Regulations at WAC Chapter 173-303, specifically the Tank System regulations in WAC 173-303-640. These regulatory requirements have been incorporated into the Dangerous Waste Permit, WTP- Operating Unit Group 10, WA 7890008967, as permit condition III.10.E.3.c.

Verification: Construction/installation verification is expected to be achieved through the following:

Verif. Method	Verif. By	Plan	Notes/Comments
R/I	**ENV**	Review completed independent, qualified, installation inspector installation packages. Perform walkdown as necessary to complete verification	

3.10.4.6 Melter 2 Concentrate Receipt Vessel Overflow Prevention Controls (LCP-VSL-00002)

Requirement: The melter 2 concentrate receipt vessel shall be constructed with the appropriate instrumentation to allow for the control and prevention of overflow from the tank or containment systems. See Table 3-12 for the overflow instruments.

Table 3-12 Melter 2 Concentrate Receipt Vessel Overflow Prevention Controls

Monitoring/Control Parameter	Type of Instrument/Control Device	Device Tag Number
Level Measurement for LCP-VSL-00002	Level Element	LCP-LE-0252
	Level Transmitter	LCP-LT-0252
	Level Indicator	LCP-LI-0252
	Level Element	LCP-LE-0233
	Level Transmitter	LCP-LT-0233
	Level Indicator	LCP-LI-0233
	High Level Select	LCP-HS-0233
	Level Indicator (Gallons)	LCP-LI-0233A
	Level Alarm High High	LCP-LAHH-0233A
	Level Alarm High	LCP-LAH-0233A
	Level Alarm Low	LCP-LAL-0233A

Monitoring/Control Parameter	Type of Instrument/Control Device	Device Tag Number
	Level Alarm Low Low	LCP-LALL-0233A
	Level Alarm Low Low Low	LCP-LALLL-0233A

[Sections III.10.E.5.d, III.10.H.1.a.xvii, DWP]

Basis Discussion: Table 3-12 is developed from 24590-LAW-PER-J-03-002, *System Logic Description for Low-Activity Waste Facility – LAW Concentrate Receipt Process System (LCP)*. This requirement is derived from the Washington Administrative Code (WAC) Dangerous Waste Regulations at WAC Chapter 173-303, specifically the Tank System regulations in WAC 173-303-640(5)(b). These regulatory requirements have been incorporated into the Dangerous Waste Permit, WTP- Operating Unit Group 10, WA 7890008967, as permit conditions III.10.E.5.d and III.10.H.1.a.xvii.

Verification: Construction/installation verification is expected to be achieved through the following:

Verif. Method	Verif. By	Plan	Notes/Comments
R/I	**ENV**	Review completed independent, qualified, installation inspector installation packages. Perform walkdown as necessary to complete verification	

3.10.4.7 Support and Protect Ancillary Equipment (LCP-VSL-00002)

Requirement: Melter 2 concentrate receipt vessels ancillary equipment shall be supported and protected against physical damage and excessive stress due to settlement, vibration, expansion, or contraction. (WAC 173-303-640(3)(f)). [Section III.10.E.3.d, DWP]

Basis Discussion: This requirement is derived from the Washington Administrative Code (WAC) Dangerous Waste Regulations at WAC Chapter 173-303, specifically the Tank System regulations in WAC 173-303-640. These regulatory requirements have been incorporated into the Dangerous Waste Permit, WTP- Operating Unit Group 10, WA 7890008967, as permit condition III.10.E.3.d.

Verification: Construction/installation verification is expected to be achieved through the following:

Verif. Method	Verif. By	Plan	Notes/Comments
R/I	**ENV**	Review completed independent, qualified, installation inspector installation packages. Perform walkdown as necessary to complete verification	

3.10.5 LCP/LFP Bulges

3.10.5.1 LCP/LFP Bulges and Floor Drains Construction

Requirement: The Permittees will construct the LCP/LFP bulges listed in Permit Tables III.10.H.B. (see Table 3-13 and Table 3-14), as approved/modified pursuant to Permit Condition III.10.H.5, as specified in Permit Condition III.10.H.1 and Operating Unit Group 10, Chapter 4 of this Permit, and Operating Unit Group 10, Appendices 9.1 through 9.15 and 9.17 of this Permit, as approved pursuant to Permit Conditions III.10.H.5.a. through d., and III.10.H.5.f.

Table 3-13 LCP/LFP Bulge Secondary Containment

Component (Room)	Approximate Room/Area Dimensions (LxW feet)	Miscellaneous Treatment Units or Tanks in Room/Area (Largest Plant Item)	Volume Largest Plant Item in Room/Area (US Gallons)	Minimum Secondary Containment Height (feet)
LCP-BULGE-00001 (L-0202) LCP-BULGE-00002 (L-0202) LCP-BULGE-00003 (L-0202) LFP-BULGE-00001 (L-0202) LFP-BULGE-00002 (L-0202)	Secondary containment for ancillary equipment, no minimum liner height required.			

Table 3-14 LCP/LFP Bulges Floor Drain Dimensions and Materials of Construction

Floor Drain, Room and Elevation	Floor Drains Dimension (approximate) and Materials of Construction
LCP-FD-00001 Floor Drain L-0123 (LCP-BULGE-00001 Drain, El. 3 ft.)	2 in. Dia. 316L
LCP-FD-00002 Floor Drain L-0123 (LCP-BULGE-00002 Drain, El. 3 ft.)	2 in. Dia. 316L
LCP-FD-00003 Floor Drain L-0124 (LCP-BULGE-00003 Drain, El. 3 ft.)	2 in. Dia. 316L
LFP-FD-00002 Floor Drain L-0123 (LFP-BULGE-00001 Drain, El. 3 ft.)	2 in. Dia. 316L
LFP-FD-00002 Floor Drain L-0124 (LFP-BULGE-00002 Drain, El. 3 ft.)	2 in. Dia. 316L

[Sections III.10.H.1.a.i, III.10.H.1.a.ii, III.10.I.1.a.i, III.10.I.1.a.ii, Table III.10.E.L, Chp. 4E, Tables 4E-3 and 4E-4, DWP]

Basis Discussion: Important containment features are delineated and described in these appendices with some specifics covered by construction requirements identified in this document.

Verification: Construction/installation verification is expected to be achieved through the following:

Verif. Method	Verif. By	Plan	Notes/Comments
R	**ENV**	Review as-built drawings of the drawings and specification listed in the requirement.	

Verif. Method	Verif. By	Plan	Notes/Comments
I	**ENV**	Perform a permitted facility and system inspection of DMWU system to verify construction and installation is in compliance with the permitted design.	

3.10.5.2 Support and Protection (LFP/LCP Bulges)

Requirement: The Permittees must ensure the LFP/LCP bulges are supported and protected against physical damage and excessive stress due to settlement, vibration, expansion, or contraction [WAC 173-303-640(3)(f), in accordance with WAC 173-303-680(2) and (3)]. [Section III.10.H.1.a.vii, DWP]

Basis Discussion: This requirement is derived from the Washington Administrative Code (WAC) Dangerous Waste Regulations at WAC Chapter 173-303, specifically the Tank System regulations in WAC 173-303-640. These regulatory requirements have been incorporated into the Dangerous Waste Permit, WTP- Operating Unit Group 10, WA 7890008967, as permit condition III.10.H.1.a.vii.

Verification: Construction/installation verification is expected to be achieved through the following:

Verif. Method	Verif. By	Plan	Notes/Comments
R/I	**ENV**	Review completed installation packages and nonconformance reports and construction deficiency reports to confirm the plant was constructed in accordance with the approved designs, plans and specifications. Perform walkdown as necessary to complete verification	

3.10.5.3 LFP/LCP Prevention of Escaping Emissions From Bulges

Requirement: For each LAW Vitrification System sub-system holding dangerous waste which are acutely or chronically toxic by inhalation, the Permittees will operate the system to prevent escape of vapors, fumes or other emissions into the air [WAC 173-303-806(4)(i)(i)(B) and WAC 173-303-640(5)(e), in accordance with WAC 173-303-680]. [Section III.10.H.1.a.xxix, DWP]

Basis Discussion: This requirement is derived from the Washington Administrative Code (WAC) Dangerous Waste Regulations at WAC Chapter 173-303, specifically the Tank System regulations in WAC 173-303-640. These regulatory requirements have been incorporated into the Dangerous Waste Permit, WTP- Operating Unit Group 10, WA 7890008967, as permit condition III.10.H.1.a.xxix.

Verification: Construction/installation verification is expected to be achieved through the following:

Verif. Method	Verif. By	Plan	Notes/Comments
R/I	**ENV**	Review as-built P&IDs to verify the system has a vapor collection system and has been constructed according to the design. Perform walkdown as necessary to complete verification	

3.10.6 LFP/LCP Aboveground Piping

Requirement: Tank system aboveground piping shall be constructed of the materials specified in the approved design. [Sections III.10.C.10.a, III.10.C.9.c, III.10.E.2.a, DWP]

Basis Discussion: The requirement to verify the materials for above ground piping is a direct request for ecology to certify the materials in use for the piping. Aboveground piping components include, but are not limited to liquid contacting surfaces of pipe, pumps, valves, and instrumentation.

Verification: Construction/installation verification is expected to be achieved through the following:

Verif. Method	Verif. By	Plan	Notes/Comments
R/I	**ENV**	Review of construction and installation will be accomplished through the 24590-WTP-GPG-ENG-087, *Statistical Sampling Methods of Engineering Quality Monitoring and Inspection.* Perform walkdown as necessary to complete verification	

3.10.7 Corrosion Protection for Underground lines

Requirement: The Permittees must provide the type and degree of corrosion protection for underground transfer lines recommended by an independent corrosion expert, based on the information provided in Operating Unit Group 10, Appendix 9.9, and 9.11 of this Permit, as approved pursuant to Permit Conditions III.10.E.9.b.i., III.10.E.9.b.iv., III.10.E.9.b.v., III.10.E.9.c.i., III.10.E.9.c.iv., III.10.E.9.c.v., III.10.E.9.d.i., III.10.E.9.d.iv., and III.10.E.9.d.v. or other corrosion protection if the Ecology believes other corrosion protection is necessary to ensure the integrity of the tank system during use of the tank system. The installation of a corrosion protection system that is field fabricated must be supervised by an independent corrosion expert to ensure proper installation. [Section III.10.E.3.e, DWP]

Basis Discussion: This requirement is derived from the Washington Administrative Code (WAC) Dangerous Waste Regulations at WAC Chapter 173-303, specifically the Tank System regulations in WAC 173-303-640. These regulatory requirements have been incorporated into the Dangerous Waste Permit, WTP- Operating Unit Group 10, WA 7890008967, as permit condition III.10.E.3.e.

At a minimum, the following underground transfer lines are to be evaluated:

- LCP-PB-03368-S32B-03
- DEP-PB-00009-S32B-03

This requirement is not applicable to tank systems with components that are not in contact with soil or water.

Verification: Construction/installation verification is expected to be achieved through the following:

Verif. Method	Verif. By	Plan	Notes/Comments
R	**ENV**	Review the independent corrosion engineering report to verify the system meets the recommendations.	

Attachment 6
19-ECD-0036
(68 Pages Excluding Cover Sheet)

24590-LAW-3ZN-LOP-00011

Incorporate Ecology Comments for DWP Requirements

Issued by
RPP-WTP PDC

System Design Description Change Notice

CHANGE DOCUMENT NO. 24590-LAW-3ZN-LOP-00011

JOB NO.	TITLE FOR CHANGE NOTICE
24590	Incorporate Ecology comments for DWP Requirements

DOCUMENT NUMBER	REV	DOCUMENT NUMBER	REV
24590-LAW-3ZD-LOP-00001	2		

PART OF DESIGN CHANGE PACKAGE (DCP)? ☐ Yes ☒ No

Justification for no DCP: Impacted SSC has not been turned over to the Plant Management organization.

INCORPORATES AN EIE? ☐ Yes ☒ No If yes, list EIEs:

JUSTIFICATION FOR CHANGE

Incorporation of Department of Ecology comments for DWP Requirements (Section 3.11)

Supersedes Change Document ☐ Yes ☒ No

REQUIREMENTS REVIEW

Client Approval Required ☐ Yes ☒ No | Interface Resolution Required * ☐ Yes ☒ No

Address any "yes" answers in the description

DESCRIPTION OF CHANGE

Revise Section 3.11 as shown in Attachment. Changes are shown as added (underlined) or deleted (~~strikethrough~~).

ORIGINATOR		CHECKER	
Engineering – Nathan Kippes	Originator By Nathan Kippes - nmkippes Org Name Engineering Placed Oct 31, 2018	Jerid Mauss	Checked By Jerid Mauss - jlmauss Org Name Placed Oct 31, 2018

Validation:	Environmental Protection	Donna Yasek	Donna Yasek	11/7/18
	Organization/Area of Responsibility	*Print/Type Name*	*Signature*	*Date*
Concurrence:	N/A			
	Title	*Print/Type Name*	*Signature*	*Date*
Concurrence:	Engineering Manager and Design Authority	Ian Milgate		11/7/18
	Title	*Print/Type Name*	*Signature*	*Date*
Approval:	Systems Engineering Manager	Sarah Barker		11/8/18
	Title	*Print/Type Name*	*Signature*	*Date*

3.11 Dangerous Waste Permit (DWP) and Washington Administrative Code (WAC) for the LOP and LVP

The requirements delineated in this section are construction and installation certification requirements and do not include design or operational requirements. These WTP construction certification requirements will document that the WTP Dangerous Waste Management Units have been constructed in accordance with the WTP – Operating Unit Group 10 DWP requirements, Permit Number WA7890008967, Condition III.10.C.2.a and Washington Administrative Code (WAC) 173-303-810(14)(a).

3.11.1 Melters 1 & 2 Film Coolers

3.11.1.1 LOP Melter Film Cooler Construction

Requirement: The Permittees will construct the LAW melter film coolers listed in Permit Tables III.10.H.A and B. (see Table 3-5), as approved/modified pursuant to Permit Condition III.10.H.5, as specified in Permit Condition III.10.H.1 and Operating Unit Group 10, Chapter 4 of this Permit, and Operating Unit Group 10, Appendices 9.1 through 9.15 and 9.17 of this Permit, as approved pursuant to Permit Conditions III.10.H.5.a. through d., and III.10.H.5.f. [Sections III.10.H.1.a.i, III.10.H.1.a.ii, III.10.I.a.i, III.10.I.a.ii, Table III.10.H.A, Chp. 4E, Table 4E-2, DWP]

Table 3-5 LAW Melter Film Coolers Construction

Component Number/Location	Description	Material
LOP-FCLR-00001/L-0112	Melter 1 Primary Film Cooler	Stainless Steel
LOP-FCLR-00002/L-0112	Melter 1 Standby Film Cooler	Stainless Steel
LOP-FCLR-00003/L-0112	Melter 2 Primary Film Cooler	Stainless Steel
LOP-FCLR-00004/L-0112	Melter 2 Standby Film Cooler	Stainless Steel

Basis Discussion: Important containment features are delineated and described in these appendices with some specifics covered by construction requirements identified in this document.

Verification: Construction/installation verification is expected to be achieved through the following:

Verif. Method	Verif. By	Plan	Notes/Comments
R/I	**ENV**	Review completed independent qualified inspector installation packages. Perform walkdown as necessary to complete verification.	

3.11.1.2 Handling and Installation Procedures

Requirement: The Permittees must ensure that proper handling procedures are adhered to in order to prevent damage to the LAW melter film coolers~~s submerged bed scrubbers~~ during installation. Prior to covering, enclosing, or placing the new LAW melter film coolers or component in use, an independent, qualified, installation inspector or an independent, qualified, registered professional engineer, either of whom is trained and experienced in the proper installation of similar systems or components, must inspect the system for the presence of any of the following items:

- Weld breaks.
- Punctures.
- Scrapes of protective coatings.

- Cracks.
- Corrosion.
- Other structural damage or inadequate construction/installation.

All discrepancies must be remedied before the LAW Vitrification System is covered, enclosed, or placed in use [WAC 173-303-640(3)(c), in accordance with WAC 173-303-680(2) and (3)]. [Section III.10.H.1.a.iv, III.10.I.1.a.iv, DWP]

Basis Discussion: This requirement is derived from the Washington Administrative Code (WAC) Dangerous Waste Regulations at WAC Chapter 173-303, specifically the Tank System regulations in WAC 173-303-680. These regulatory requirements have been incorporated into the Dangerous Waste Permit, WTP- Operating Unit Group 10, WA 7890008967, as permit conditions III.10.H.1.a.iv and III.10.I.1.a.iv.

Verification: Construction/installation verification is expected to be achieved through the following:

Verif. Method	Verif. By	Plan	Notes/Comments
R/I	**ENV**	Review completed independent qualified inspector installation packages. Perform walkdown as necessary to complete verification.~~Perform a review of the design to verify the material of construction, dimensions and location.~~	

3.11.1.3 Test for Tightness

Requirement: The Permittees must test for tightness the LAW melter film coolers, prior to being covered, enclosed, or placed into use. If the LAW Vitrification System or components are found not to be tight, all repairs necessary to remedy the leak(s) in the system must be performed prior to the LAW Vitrification System being covered, enclosed, or placed in use [WAC 173-303-640(3)(e), in accordance with WAC 173-303-680(2) and (3)]. [Section III.10.H.1.a.vi, DWP]

Basis Discussion: This requirement is derived from the Washington Administrative Code (WAC) Dangerous Waste Regulations at WAC Chapter 173-303, specifically the Tank System regulations in WAC 173-303-680. These regulatory requirements have been incorporated into the Dangerous Waste Permit, WTP- Operating Unit Group 10, WA 7890008967, as permit condition III.10.H.1.a.vi.

Verification: Construction/installation verification is expected to be achieved through the following:

Verif. Method	Verif. By	Plan	Notes/Comments
R/I	**ENV**	Review completed independent qualified inspector installation packages. Perform walkdown as necessary to complete verification.	

3.11.1.4 Support and Protection

Requirement: The Permittees must ensure the LAW melter film coolers are supported and protected against physical damage and excessive stress due to settlement, vibration, expansion, or contraction [WAC 173-303-640(3)(f), in accordance with WAC 173-303-680(2) and (3)]. [Section III.10.H.1.a.vii, DWP]

Basis Discussion: This requirement is derived from the Washington Administrative Code (WAC) Dangerous Waste Regulations at WAC Chapter 173-303, specifically the Tank System regulations in WAC 173-303-680.

These regulatory requirements have been incorporated into the Dangerous Waste Permit, WTP- Operating Unit Group 10, WA 7890008967, as permit condition III.10.H.1.a.vii.

Verification: Construction/installation verification is expected to be achieved through the following:

Verif. Method	Verif. By	Plan	Notes/Comments
R/I	ENV	Review completed installation packages and nonconformance reports and construction deficiency reports to confirm the plant was constructed in accordance with the approved designs, plans and specifications. Perform walkdown as necessary to complete verification.	

3.11.1.5 ~~Corrosion Protection~~Deleted

~~**Requirement:** The Permittees must provide the type and degree of corrosion protection recommended by an independent corrosion expert, based on the information provided in Operating Unit Group 10, Appendices 9.9 and 9.11 of this Permit, as approved pursuant to Permit Conditions III.10.H.5.b.i., III.10.H.5.b.iv., III.10.H.5.b.v., III.10.H.5.c.i., III.10.H.5.c.iv., III.10.H.5.c.v., III.10.H.5.d.i., III.10.H.5.d.iv., and III.10.H.5.d.v., or other corrosion protection if Ecology believes other corrosion protection is necessary to ensure the integrity of the LAW melter film coolers during use of the LAW Vitrification System. The installation of a corrosion protection system that is field fabricated must be supervised by an independent corrosion expert to ensure proper installation [WAC 173-303-640(3)(g), in accordance with WAC 173-303-680(2) and (3)]. [Section III.10.H.1.a.viii, DWP]~~

~~**Basis Discussion:** This requirement is derived from the Washington Administrative Code (WAC) Dangerous Waste Regulations at WAC Chapter 173-303, specifically the Tank System regulations in WAC 173-303-680. These regulatory requirements have been incorporated into the Dangerous Waste Permit, WTP- Operating Unit Group 10, WA 7890008967, as permit condition III.10.H.1.a.viii.~~

~~This requirement is not applicable to tank systems with components that are not in contact with soil or water.~~

~~**Verification:** Construction/installation verification is expected to be achieved through the following:~~

~~Verif. Method~~	~~Verif. By~~	~~Plan~~	~~Notes/Comments~~
~~R~~	~~ENV~~	~~Review the independent corrosion engineering report to verify the system meets the recommendations.~~	

3.11.1.6 Monitors and Instrumentation

Requirement: All process monitors/instruments, as specified in Permit Table III.10.H.F (Table 3-6), as approved/modified pursuant to Permit Condition III.10.H.5, will be equipped with operational alarms to warn of deviation, or imminent deviation from the limits specified in Permit Table III.10.H.F. [Sections III.10.H.1.a.xiii, III.10.I.1.a.vii, Table III.10.H.F, DWP]

Table 3-6 LAW Vitrification System Waste Feed Cutoff Parameters (RESERVED)

Sub-system Designation	Instrument Tag Number	Parameter Description
RESERVED	RESERVED	RESERVED

Basis Discussion: None.

Verification: Construction/installation verification is expected to be achieved through the following:

Verif. Method	Verif. By	Plan	Notes/Comments
R/I	**ENV**	Review completed purchasing, installation and inspection documentation to verify instrumentation. Perform walkdown as necessary to complete verification.~~Review completed Instrument data sheets to verify instrument installation in accordance with the requirement.~~	

3.11.1.7 Prevention of Escaping Emissions

Requirement: The melter film coolers are~~is~~ constructed with features that prevent escape of vapors, fumes, or other emissions into the air [WAC 173-303-806(4)(i)(i)(B) and WAC 173-303-640(5)(e), in accordance with WAC 173-303-680]. [Section III.10.H.1.a.xxix, DWP]

Basis Discussion: This requirement is derived from the Washington Administrative Code (WAC) Dangerous Waste Regulations at WAC Chapter 173-303, specifically the Tank System regulations in WAC 173-303-680. These regulatory requirements have been incorporated into the Dangerous Waste Permit, WTP- Operating Unit Group 10, WA 7890008967, as permit condition III.10.H.1.a.xxix.

Verification: Construction/installation verification is expected to be achieved through the following:

Verif. Method	Verif. By	Plan	Notes/Comments
R/I	**ENV**	Review as-built P&IDs to verify the system has a vapor collection system and has been constructed according to the design. Perform walkdown as necessary to complete verification.	

3.11.2 LOP Scrubbers

3.11.2.1 Melters Submerged Bed Scrubbers Construction

Requirement: The Permittees will construct the LAW melters submerged bed scrubbers listed in Permit Tables III.10.H.A and B. (see Table 3-7), as approved/modified pursuant to Permit Condition III.10.H.5, as specified in Permit Condition III.10.H.1 and Operating Unit Group 10, Chapter 4 of this Permit, and Operating Unit Group 10, Appendices 9.1 through 9.15 and 9.17 of this Permit, as approved pursuant to Permit Conditions III.10.H.5.a. through d., and III.10.H.5.f. [Sections III.10.H.1.a.i, III.10.H.1.a.ii, III.10.I.a.i, III.10.I.a.ii, Table III.10.H.A, Chp. 4E, Table 4E-2, DWP]

Table 3-7 Submerged Bed Scrubbers Construction

Component Number/Location	Description	Material	Total Volume (US Gallons)
LOP-SCB-00001/L-0123	Melter 1 Submerged Bed Scrubber	Ceramic Packing/Hastelloy	4,948
LOP-SCB-00002/L-0124	Melter 2 Submerged Bed Scrubber	Ceramic Packing/Hastelloy	4,948

Basis Discussion: Important containment features are delineated and described in these appendices with some specifics covered by construction requirements identified in this document.

Verification: Construction/installation verification is expected to be achieved through the following:

Verif. Method	Verif. By	Plan	Notes/Comments
R/I	ENV	Review completed independent qualified inspector installation packages. Perform walkdown as necessary to complete verification.	

3.11.2.2 Handling and Installation Procedures

Requirement: The Permittees must ensure that proper handling procedures are adhered to in order to prevent damage to the LAW melters submerged bed scrubbers during installation. Prior to covering, enclosing, or placing the new LAW melters submerged bed scrubbers or component in use, an independent, qualified, installation inspector or an independent, qualified, registered professional engineer, either of whom is trained and experienced in the proper installation of similar systems or components, must inspect the system for the presence of any of the following items:

- Weld breaks.
- Punctures.
- Scrapes of protective coatings.
- Cracks.
- Corrosion.
- Other structural damage or inadequate construction/installation.

All discrepancies must be remedied before the LAW Vitrification System is covered, enclosed, or placed in use [WAC 173-303-640(3)(c), in accordance with WAC 173-303-680(2) and (3)]. [Section III.10.H.1.a.iv, III.10.I.1.a.iv, DWP]

Basis Discussion: This requirement is derived from the Washington Administrative Code (WAC) Dangerous Waste Regulations at WAC Chapter 173-303, specifically the Tank System regulations in WAC 173-303-680. These regulatory requirements have been incorporated into the Dangerous Waste Permit, WTP- Operating Unit Group 10, WA 7890008967, as permit condition III.10.H.1.a.iv and III.10.I.1.a.iv.

Verification: Construction/installation verification is expected to be achieved through the following:

Verif. Method	Verif. By	Plan	Notes/Comments
R/I	ENV	Review completed independent qualified inspector installation packages. Perform walkdown as necessary to complete verification.	

3.11.2.3 Test for Tightness

Requirement: The Permittees must test for tightness the LAW melters submerged bed scrubbers, prior to being covered, enclosed, or placed into use. If the LAW melters submerged bed scrubbers are found not to be tight, all repairs necessary to remedy the leak(s) in the system must be performed prior to the LAW Vitrification System being covered, enclosed, or placed in use [WAC 173-303-640(3)(e), in accordance with WAC 173-303-680(2) and (3)]. [Section III.10.H.1.a.vi, DWP]

Basis Discussion: This requirement is derived from the Washington Administrative Code (WAC) Dangerous Waste Regulations at WAC Chapter 173-303, specifically the Tank System regulations in WAC 173-303-680. These regulatory requirements have been incorporated into the Dangerous Waste Permit, WTP- Operating Unit Group 10, WA 7890008967, as permit condition Section III.10.H.1.a.vi.

Verification: Construction/installation verification is expected to be achieved through the following:

Verif. Method	Verif. By	Plan	Notes/Comments
R/I	ENV	Review completed installation packages documentation to ensure the tightness testing was completed. Perform walkdown as necessary to complete verification.	

3.11.2.4 Support and Protection

Requirement: The Permittees must ensure the LAW melters submerged bed scrubbers are supported and protected against physical damage and excessive stress due to settlement, vibration, expansion, or contraction [WAC 173-303-640(3)(f), in accordance with WAC 173-303-680(2) and (3)]. [Section III.10.H.1.a.vii, DWP]

Basis Discussion: This requirement is derived from the Washington Administrative Code (WAC) Dangerous Waste Regulations at WAC Chapter 173-303, specifically the Tank System regulations in WAC 173-303-680. These regulatory requirements have been incorporated into the Dangerous Waste Permit, WTP- Operating Unit Group 10, WA 7890008967, as permit condition III.10.H.1.a.vii.

Verification: Construction/installation verification is expected to be achieved through the following:

Verif. Method	Verif. By	Plan	Notes/Comments
R/I	ENV	Review completed installation packages and nonconformance reports and construction deficiency reports to confirm the plant was constructed in accordance with the approved designs, plans and specifications. Perform walkdown as necessary to complete verification.~~Review completed installation packages documentation to ensure the tightness testing was completed.~~	

3.11.2.5 ~~Corrosion Protection~~Deleted

~~**Requirement:** The Permittees must provide the type and degree of corrosion protection recommended by an independent corrosion expert, based on the information provided in Operating Unit Group 10, Appendices 9.9 and 9.11 of this Permit, as approved pursuant to Permit Conditions III.10.H.5.b.i., III.10.H.5.b.iv., III.10.H.5.b.v., III.10.H.5.c.i., III.10.H.5.c.iv., III.10.H.5.c.v., III.10.H.5.d.i., III.10.H.5.d.iv., and III.10.H.5.d.v., or other corrosion protection if Ecology believes other corrosion protection is necessary to ensure the integrity of the LAW melters submerged bed scrubbers during use of the LAW Vitrification System. The installation of a corrosion protection system that is field fabricated must be supervised by an independent corrosion expert to ensure proper installation [WAC 173-303-640(3)(g), in accordance with WAC 173-303-680(2) and (3)]. [Section III.10.H.1.a.viii, DWP]~~

~~**Basis Discussion:** This requirement is derived from the Washington Administrative Code (WAC) Dangerous Waste Regulations at WAC Chapter 173-303, specifically the Tank System regulations in WAC 173-303-680.~~

~~These regulatory requirements have been incorporated into the Dangerous Waste Permit, WTP- Operating Unit Group 10, WA 7890008967, as permit condition III.10.H.1.a.viii.~~

~~This requirement is not applicable to tank systems with components that are not in contact with soil or water.~~

~~**Verification:** Construction/installation verification is expected to be achieved through the following:~~

~~Verif. Method~~	~~Verif. By~~	~~Plan~~	~~Notes/Comments~~
~~R~~	~~ENV~~	~~Review completed installation packages to verify the requirements corrosion protection are met.~~	

3.11.2.6 Scrubbers Overflow Prevention Controls

Requirement: The LOP scrubbers shall be constructed with the appropriate instrumentation to allow for the control and prevention of overflow from the tank or containment systems. See Table 3-8 for the overflow instruments. [Section III.10.E.9.e.iv, III.10.H.1.a.xvii, DWP]

Table 3-8 LOP Scrubber Overflow Prevention Controls

Monitoring/Control Parameter	Type of Instrument/Control Device	Instrument/Control Device Tag Number
Melter 1 Scrubber LOP-SCB-00001	Level Transmitters	LT-1063~~Z~~ LT-1011Z
	Level Indicators	LI-1063~~Z~~ LI-1011Z
	Level Switch High High	LSHH-1063~~Z~~
	Level Switch Low Low	LSLL-1063~~Z~~
	Level Alarm High High	LAHH-1063~~Z~~
Melter 2 Scrubber LOP-SCB-00002	Level Transmitter	LT-2063~~Z~~ LT-2011Z
	Level Indicators	LI-2063~~Z~~ LI-2011Z
	Level Switch High High	LSHH-2063~~Z~~
	Level Switch Low Low	LSLL-2063~~Z~~
	Level Alarm High High	LAHH-2063~~Z~~

Basis Discussion: Table 3-8 is developed from 24590-LAW-PER-J-03-003, *System Logic Description for Low-Activity Waste Facility – LAW Primary Offgas Process (LOP) System*. This requirement is derived from the Washington Administrative Code (WAC) Dangerous Waste Regulations at WAC Chapter 173-303, specifically the Tank System regulations in WAC 173-303-640(5)(b). These regulatory requirements have been incorporated into the Dangerous Waste Permit, WTP- Operating Unit Group 10, WA 7890008967, as permit conditions III.10.E.9.e.iv and III.10.H.1.a.xvii.

Verification: Construction/installation verification is expected to be achieved through the following:

Verif. Method	Verif. By	Plan	Notes/Comments
R/I	ENV	Review completed purchasing, installation and inspection documentation to verify instrumentation. Perform walkdown as necessary to complete	

Verif. Method	Verif. By	Plan	Notes/Comments
		verification.~~Review the Instrument Data Sheets for the instruments to verify Instruments in Table 3-8.~~	

3.11.2.7 Monitors and Instrumentation

Requirement: All process monitors/instruments, as specified in Permit Table III.10.H.F (see Table 3-9), as approved/modified pursuant to Permit Condition III.10.H.5, will be equipped with operational alarms to warn of deviation, or imminent deviation from the limits specified in Permit Table III.10.H.F. [Sections III.10.H.1.a.xiii, III.10.I.1.a.vii, Table III.10.H.F, DWP]

Table 3-9 LAW Vitrification System Waste Feed Cutoff Parameters (RESERVED)

Sub-system Designation	Instrument Tag Number	Parameter Description
RESERVED	RESERVED	RESERVED

Basis Discussion: None.

Verification: Construction/installation verification is expected to be achieved through the following:

Verif. Method	Verif. By	Plan	Notes/Comments
R/I	**ENV**	Review completed purchasing, installation and inspection documentation to verify instrumentation. Perform walkdown as necessary to complete verification.~~Review completed installation packages to verify instrument installation in accordance with the requirement.~~	

3.11.2.8 Prevention of Escaping Emissions

Requirement: The LOP scrubbers are~~is~~ constructed with features that prevent escape of vapors, fumes, or other emissions into the air [WAC 173-303-806(4)(i)(i)(B) and WAC 173-303-640(5)(e), in accordance with WAC 173-303-680]. [Section III.10.H.1.a.xxix, DWP]

Basis Discussion: This requirement is derived from the Washington Administrative Code (WAC) Dangerous Waste Regulations at WAC Chapter 173-303, specifically the Tank System regulations in WAC 173-303-640. These regulatory requirements have been incorporated into the Dangerous Waste Permit, WTP- Operating Unit Group 10, WA 7890008967, as permit condition III.10.H.1.a.xxix.

Verification: Construction/installation verification is expected to be achieved through the following:

Verif. Method	Verif. By	Plan	Notes/Comments
R/I	**ENV**	Review as-built P&IDs to verify the system has a vapor collection system and has been constructed according to the design. Perform walkdown as necessary to complete verification.	

3.11.3 LOP Wet Electrostatic Precipitators

3.11.3.1 Wet Electrostatic Precipitators Construction

Requirement: The Permittees will construct the LAW wet electrostatic precipitators listed in Permit Tables III.10.H.A and B. (see Table 3-10), as approved/modified pursuant to Permit Condition III.10.H.5, as specified in Permit Condition III.10.H.1 and Operating Unit Group 10, Chapter 4 of this Permit, and Operating Unit Group 10, Appendices 9.1 through 9.15 and 9.17 of this Permit, as approved pursuant to Permit Conditions III.10.H.5.a. through d., and III.10.H.5.f. [Sections III.10.H.1.a.i, III.10.H.1.a.ii, III.10.I.a.i, III.10.I.a.ii, Table III.10.H.A, Chp. 4E, Table 4E-2, DWP]

Table 3-10 Wet Electrostatic Precipitators Construction

Component Number/Location	Description	Material
LOP-WESP-00001/L-0123	Melter 1 Wet Electrostatic Precipitator	6% Molybdenum/ Stainless Steel
LOP-WESP-00002/L-0124	Melter 2 Wet Electrostatic Precipitator	6% Molybdenum/ Stainless Steel

Basis Discussion: Important containment features are delineated and described in these appendices with some specifics covered by construction requirements identified in this document.

Verification: Construction/installation verification is expected to be achieved through the following:

Verif. Method	Verif. By	Plan	Notes/Comments
R/I	**ENV**	Review completed independent qualified inspector installation packages. Perform walkdown as necessary to complete verification.	

3.11.3.2 Handling and Installation Procedures

Requirement: The Permittees must ensure that proper handling procedures are adhered to in order to prevent damage to the LAW wet electrostatic precipitators during installation. Prior to covering, enclosing, or placing the new LAW wet electrostatic precipitators in use, an independent, qualified, installation inspector or an independent, qualified, registered professional engineer, either of whom is trained and experienced in the proper installation of similar systems or components, must inspect the system for the presence of any of the following items:

- Weld breaks.
- Punctures.
- Scrapes of protective coatings.
- Cracks.
- Corrosion.
- Other structural damage or inadequate construction/installation.

All discrepancies must be remedied before the LAW Vitrification System is covered, enclosed, or placed in use [WAC 173-303-640(3)(c), in accordance with WAC 173-303-680(2) and (3)]. [Section III.10.H.1.a.iv, III.10.I.1.a.iv, DWP]

Basis Discussion: This requirement is derived from the Washington Administrative Code (WAC) Dangerous Waste Regulations at WAC Chapter 173-303, specifically the Tank System regulations in WAC 173-303-640. These regulatory requirements have been incorporated into the Dangerous Waste Permit, WTP- Operating Unit Group 10, WA 7890008967, as permit condition III.10.I.1.a.iv.

Verification: Construction/installation verification is expected to be achieved through the following:

Verif. Method	Verif. By	Plan	Notes/Comments
R/I	ENV	Review completed independent qualified inspector installation packages. Perform walkdown as necessary to complete verification.	

3.11.3.3 Test for Tightness

Requirement: The Permittees must test for tightness the LAW wet electrostatic precipitators, prior to being covered, enclosed, or placed into use. If the LAW wet electrostatic precipitators are found not to be tight, all repairs necessary to remedy the leak(s) in the system must be performed prior to the LAW Vitrification System being covered, enclosed, or placed in use [WAC 173-303-640(3)(e), in accordance with WAC 173-303-680(2) and (3)]. [Section III.10.H.1.a.vi, DWP]

Basis Discussion: This requirement is derived from the Washington Administrative Code (WAC) Dangerous Waste Regulations at WAC Chapter 173-303, specifically the Tank System regulations in WAC 173-303-640. These regulatory requirements have been incorporated into the Dangerous Waste Permit, WTP- Operating Unit Group 10, WA 7890008967, as permit condition III.10.H.1.a.vi.

Verification: Construction/installation verification is expected to be achieved through the following:

Verif. Method	Verif. By	Plan	Notes/Comments
R/I	ENV	Review completed installation packages documentation to ensure the tightness testing was completed. Perform walkdown as necessary to complete verification.	

3.11.3.4 Support and Protection

Requirement: The Permittees must ensure the LAW wet electrostatic precipitators are supported and protected against physical damage and excessive stress due to settlement, vibration, expansion, or contraction [WAC 173-303-640(3)(f), in accordance with WAC 173-303-680(2) and (3)]. [Section III.10.H.1.a.vii, DWP]

Basis Discussion: This requirement is derived from the Washington Administrative Code (WAC) Dangerous Waste Regulations at WAC Chapter 173-303, specifically the Tank System regulations in WAC 173-303-640. These regulatory requirements have been incorporated into the Dangerous Waste Permit, WTP- Operating Unit Group 10, WA 7890008967, as permit condition III.10.H.1.a.vii.

Verification: Construction/installation verification is expected to be achieved through the following:

Verif. Method	Verif. By	Plan	Notes/Comments
R/I	ENV	Review completed installation packages and nonconformance reports and construction deficiency	

Verif. Method	Verif. By	Plan	Notes/Comments
		reports to confirm the plant was constructed in accordance with the approved designs, plans and specifications. Perform walkdown as necessary to complete verification.	

3.11.3.5 ~~Corrosion Protection~~Deleted

~~**Requirement:** The Permittees must provide the type and degree of corrosion protection recommended by an independent corrosion expert, based on the information provided in Operating Unit Group 10, Appendices 9.9 and 9.11 of this Permit, as approved pursuant to Permit Conditions III.10.H.5.b.i., III.10.H.5.b.iv., III.10.H.5.b.v., III.10.H.5.c.i., III.10.H.5.c.iv., III.10.H.5.c.v., III.10.H.5.d.i., III.10.H.5.d.iv., and III.10.H.5.d.v., or other corrosion protection if Ecology believes other corrosion protection is necessary to ensure the integrity of the LAW wet electrostatic precipitators during use of the LAW Vitrification System. The installation of a corrosion protection system that is field fabricated must be supervised by an independent corrosion expert to ensure proper installation [WAC 173-303-640(3)(g), in accordance with WAC 173-303-680(2) and (3)]. [Section III.10.H.1.a.viii, DWP[WA7890008967_WTP_ID#480]~~

~~**Basis Discussion:** This requirement is derived from the Washington Administrative Code (WAC) Dangerous Waste Regulations at WAC Chapter 173-303, specifically the Tank System regulations in WAC 173-303-640. These regulatory requirements have been incorporated into the Dangerous Waste Permit, WTP- Operating Unit Group 10, WA 7890008967, as permit condition III.10.H.1.a.viii.~~

~~This requirement is not applicable to tank systems with components that are not in contact with soil or water.~~

~~**Verification:** Construction/installation verification is expected to be achieved through the following:~~

~~Verif. Method~~	~~Verif. By~~	~~Plan~~	~~Notes/Comments~~
~~R~~	~~ENV~~	~~Review completed installation packages to verify the requirements corrosion protection are met.~~	

3.11.3.6 WESP Overflow Prevention Controls

Requirement: The WESPs shall be constructed with the appropriate instrumentation to allow for the control and prevention of overflow from the tank or containment systems. See Table 3-11 for the overflow instruments. [Section III.10.E.9.e.iv, III.10.H.1.a.xvii, DWP]

Table 3-11 WESP Overflow Prevention Controls

Monitoring/Control Parameter	Type of Instrument/ Control Device	Instrument/Control Device Tag Number
Melter 1 WESP LOP-WESP-00001	Level Transmitters	LT-1059Z LT-1060~~Z~~
	Level Indicators	LI-1059Z LI-1060~~Z~~
	Level Switches High High	LSHH-1059Z LSHH-1060~~Z~~
	Level Alarms High High	LAHH-1059Z LAHH-1060~~Z~~

Monitoring/Control Parameter	Type of Instrument/ Control Device	Instrument/Control Device Tag Number
Melter 2 WESP LOP-WESP-00002	Level Transmitters	LT-2059Z LT-2060~~Z~~
	Level Indicators	LI-2059Z LI-2060~~Z~~
	Level Switches High High	LSHH-2059Z LSHH-2060~~Z~~
	Level Alarms High High	LAHH-2059Z LAHH-2060~~Z~~

Basis Discussion: Table 3-11 is developed from 24590-LAW-PER-J-03-003, *System Logic Description for Low-Activity Waste Facility – LAW Primary Offgas Process (LOP) System*. This requirement is derived from the Washington Administrative Code (WAC) Dangerous Waste Regulations at WAC Chapter 173-303, specifically the Tank System regulations in WAC 173-303-640(5)(b). These regulatory requirements have been incorporated into the Dangerous Waste Permit, WTP- Operating Unit Group 10, WA 7890008967, as permit conditions III.10.E.9.e.iv and III.10.H.1.a.xvii.

Verification: Construction/installation verification is expected to be achieved through the following:

Verif. Method	Verif. By	Plan	Notes/Comments
R/I	**ENV**	Review completed purchasing, installation and inspection documentation to verify instrumentation. Perform walkdown as necessary to complete verification.~~Review the Instrument Data Sheets for the instruments to verify Instruments in Table 3-11.~~	

3.11.3.7 Monitors and Instrumentation

Requirement: All process monitors/instruments, as specified in Permit Table III.10.H.F (Table 3-12), as approved/modified pursuant to Permit Condition III.10.H.5, will be equipped with operational alarms to warn of deviation, or imminent deviation from the limits specified in Permit Table III.10.H.F. [Sections III.10.H.1.a.xiii, III.10.I.1.a.vii, Table III.10.H.F, DWP]

Table 3-12 LAW Vitrification System Waste Feed Cutoff Parameters (RESERVED)

Sub-system Designation	Instrument Tag Number	Parameter Description
RESERVED	RESERVED	RESERVED

Basis Discussion: None.

Verification: Construction/installation verification is expected to be achieved through the following:

Verif. Method	Verif. By	Plan	Notes/Comments
R/I	**ENV**	Review completed purchasing, installation and inspection documentation to verify instrumentation. Perform walkdown as necessary to complete verification.~~Review completed installation packages to verify instrument installation in accordance with the requirement.~~	

3.11.3.8 Prevention of Escaping Emissions

Requirement: The LAW wet electrostatic precipitators are~~is~~ constructed with features that prevent escape of vapors, fumes, or other emissions into the air [WAC 173-303-806(4)(i)(i)(B) and WAC 173-303-640(5)(e), in accordance with WAC 173-303-680]. [Section III.10.H.1.a.xxix, DWP]

Basis Discussion: This requirement is derived from the Washington Administrative Code (WAC) Dangerous Waste Regulations at WAC Chapter 173-303, specifically the Tank System regulations in WAC 173-303-640. These regulatory requirements have been incorporated into the Dangerous Waste Permit, WTP- Operating Unit Group 10, WA 7890008967, as permit condition III.10.H.1.a.xxix.

Verification: Construction/installation verification is expected to be achieved through the following:

Verif. Method	Verif. By	Plan	Notes/Comments
R/I	**ENV**	Review as-built P&IDs to verify the system has a vapor collection system and has been constructed according to the design. Perform walkdown as necessary to complete verification.	

3.11.4 LVP Offgas Mercury Adsorbers

3.11.4.1 Offgas Mercury Adsorber Construction

Requirement: The Permittees will construct the LAW offgas mercury adsorber listed in Permit Tables III.10.H.A and B. (see Table 3-13), as approved/modified pursuant to Permit Condition III.10.H.5, as specified in Permit Condition III.10.H.1 and Operating Unit Group 10, Chapter 4 of this Permit, and Operating Unit Group 10, Appendices 9.1 through 9.15 and 9.17 of this Permit, as approved pursuant to Permit Conditions III.10.H.5.a. through d., and III.10.H.5.f. [Sections III.10.H.1.a.i, III.10.H.1.a.ii, III.10.I.a.i, III.10.I.a.ii, Table III.10.H.A, Chp. 4E, Table 4E-2, DWP]

Table 3-13 Offgas Mercury Adsorber Construction

Component Number/Location	Description	Material
LVP-ADBR-00001A/L-304F (on LVP-SKID-00001)	Offgas Mercury Adsorber	Stainless Steel
LVP-ADBR-00001B/L-304F (on LVP-SKID-00001)	Offgas Mercury Adsorber	Stainless Steel

Basis Discussion: Important containment features are delineated and described in these appendices with some specifics covered by construction requirements identified in this document.

Verification: Construction/installation verification is expected to be achieved through the following:

Verif. Method	Verif. By	Plan	Notes/Comments
R/I	**ENV**	Review completed independent qualified inspector installation packages. Perform walkdown as necessary to complete verification.	

3.11.4.2 Handling and Installation Procedures

Requirement: The Permittees must ensure that proper handling procedures are adhered to in order to prevent damage to the LAW offgas mercury adsorber during installation. Prior to covering, enclosing, or placing the new LAW offgas mercury adsorber in use, an independent, qualified, installation inspector or an independent, qualified, registered professional engineer, either of whom is trained and experienced in the proper installation of similar systems or components, must inspect the system for the presence of any of the following items:

- Weld breaks.
- Punctures.
- Scrapes of protective coatings.
- Cracks.
- Corrosion.
- Other structural damage or inadequate construction/installation.

All discrepancies must be remedied before the LAW Vitrification System is covered, enclosed, or placed in use [WAC 173-303-640(3)(c), in accordance with WAC 173-303-680(2) and (3)]. [Section III.10.H.1.a.iv, III.10.I.1.a.iv, DWP]

Basis Discussion: This requirement is derived from the Washington Administrative Code (WAC) Dangerous Waste Regulations at WAC Chapter 173-303, specifically the Tank System regulations in WAC 173-303-640. These regulatory requirements have been incorporated into the Dangerous Waste Permit, WTP- Operating Unit Group 10, WA 7890008967, as permit conditions III.10.H.1.a.iv and III.10.I.1.a.iv.

Verification: Construction/installation verification is expected to be achieved through the following:

Verif. Method	Verif. By	Plan	Notes/Comments
R/I	**ENV**	Review completed independent qualified inspector installation packages. Perform walkdown as necessary to complete verification.	

3.11.4.3 Test for Tightness

Requirement: The Permittees must test for tightness the LAW offgas mercury adsorber, prior to being covered, enclosed, or placed into use. If the LAW offgas mercury adsorber is~~are~~ found not to be tight, all repairs necessary to remedy the leak(s) in the system must be performed prior to the LAW Vitrification System being covered, enclosed, or placed in use [WAC 173-303-640(3)(e), in accordance with WAC 173-303-680(2) and (3)]. [Section III.10.H.1.a.vi, DWP]

Basis Discussion: This requirement is derived from the Washington Administrative Code (WAC) Dangerous Waste Regulations at WAC Chapter 173-303, specifically the Tank System regulations in WAC 173-303-640. These regulatory requirements have been incorporated into the Dangerous Waste Permit, WTP- Operating Unit Group 10, WA 7890008967, as permit condition III.10.H.1.a.vi.

Verification: Construction/installation verification is expected to be achieved through the following:

Verif. Method	Verif. By	Plan	Notes/Comments
R/I	**ENV**	Review completed installation packages documentation to ensure the tightness testing was completed. Perform walkdown as necessary to complete verification.	

3.11.4.4 Support and Protection

Requirement: The Permittees must ensure the LAW offgas mercury adsorber is~~are~~ supported and protected against physical damage and excessive stress due to settlement, vibration, expansion, or contraction [WAC 173-303-640(3)(f), in accordance with WAC 173-303-680(2) and (3)]. [Section III.10.H.1.a.vii, DWP]

Basis Discussion: This requirement is derived from the Washington Administrative Code (WAC) Dangerous Waste Regulations at WAC Chapter 173-303, specifically the Tank System regulations in WAC 173-303-640. These regulatory requirements have been incorporated into the Dangerous Waste Permit, WTP- Operating Unit Group 10, WA 7890008967, as permit condition III.10.H.1.a.vii.

Verification: Construction/installation verification is expected to be achieved through the following:

Verif. Method	Verif. By	Plan	Notes/Comments
R/I	**ENV**	Review completed installation packages and nonconformance reports and construction deficiency reports to confirm the plant was constructed in accordance with the approved designs, plans and specifications. Perform walkdown as necessary to complete verification.	

3.11.4.5 ~~Corrosion Protection~~Deleted

~~**Requirement:** The Permittees must provide the type and degree of corrosion protection recommended by an independent corrosion expert, based on the information provided in Operating Unit Group 10, Appendices 9.9 and 9.11 of this Permit, as approved pursuant to Permit Conditions III.10.H.5.b.i., III.10.H.5.b.iv., III.10.H.5.b.v., III.10.H.5.c.i., III.10.H.5.c.iv., III.10.H.5.c.v., III.10.H.5.d.i., III.10.H.5.d.iv., and III.10.H.5.d.v., or other corrosion protection if Ecology believes other corrosion protection is necessary to ensure the integrity of the LAW offgas mercury adsorber during use of the LAW Vitrification System. The installation of a corrosion protection system that is field fabricated must be supervised by an independent corrosion expert to ensure proper installation [WAC 173-303-640(3)(g), in accordance with WAC 173-303-680(2) and (3)]. [Section III.10.H.1.a.viii, DWP[WA7890008967_WTP_ID#480]]~~

~~**Basis Discussion:** This requirement is derived from the Washington Administrative Code (WAC) Dangerous Waste Regulations at WAC Chapter 173-303, specifically the Tank System regulations in WAC 173-303-640. These regulatory requirements have been incorporated into the Dangerous Waste Permit, WTP- Operating Unit Group 10, WA 7890008967, as permit condition III.10.H.1.a.viii.~~

~~This requirement is not applicable to tank systems with components that are not in contact with soil or water.~~

~~**Verification:** Construction/installation verification is expected to be achieved through the following:~~

~~Verif. Method~~	~~Verif. By~~	~~Plan~~	~~Notes/Comments~~
~~R~~	~~ENV~~	~~Review completed installation packages to verify the requirements corrosion protection are met.~~	

3.11.4.6 Monitors and Instrumentation

Requirement: All process monitors/instruments, as specified in Permit Table III.10.H.F (Table 3-14), as approved/modified pursuant to Permit Condition III.10.H.5, will be equipped with operational alarms to warn of deviation, or imminent deviation from the limits specified in Permit Table III.10.H.F. [Sections III.10.H.1.a.xiii, III.10.I.1.a.vii, Table III.10.H.F, DWP]

Table 3-14 LAW Vitrification System Waste Feed Cutoff Parameters (RESERVED)

Sub-system Designation	Instrument Tag Number	Parameter Description
RESERVED	RESERVED	RESERVED

Basis Discussion: None.

Verification: Construction/installation verification is expected to be achieved through the following:

Verif. Method	Verif. By	Plan	Notes/Comments
R/I	ENV	Review completed purchasing, installation and inspection documentation to verify instrumentation. Perform walkdown as necessary to complete verification.~~Review completed installation packages to verify instrument installation in accordance with the requirement.~~	

3.11.4.7 Prevention of Escaping Emissions

Requirement: The LAW offgas mercury adsorber is constructed with features that prevent escape of vapors, fumes, or other emissions into the air [WAC 173-303-806(4)(i)(i)(B) and WAC 173-303-640(5)(e), in accordance with WAC 173-303-680]. [Section III.10.H.1.a.xxix, DWP]

Basis Discussion: This requirement is derived from the Washington Administrative Code (WAC) Dangerous Waste Regulations at WAC Chapter 173-303, specifically the Tank System regulations in WAC 173-303-640. These regulatory requirements have been incorporated into the Dangerous Waste Permit, WTP- Operating Unit Group 10, WA 7890008967, as permit condition III.10.H.1.a.xxix.

Verification: Construction/installation verification is expected to be achieved through the following:

Verif. Method	Verif. By	Plan	Notes/Comments
R/I	ENV	Review as-built P&IDs to verify the system has a vapor collection system and has been constructed according to the design. Perform walkdown as necessary to complete verification.	

3.11.5 LVP Exhausters

3.11.5.1 Exhausters Construction

Requirement: The Permittees will construct the LVP exhausters listed in Permit Tables III.10.H.A and B. (see Table 3-15), as approved/modified pursuant to Permit Condition III.10.H.5, as specified in Permit Condition III.10.H.1 and Operating Unit Group 10, Chapter 4 of this Permit, and Operating Unit Group 10, Appendices 9.1 through 9.15 and 9.17 of this Permit, as approved pursuant to Permit Conditions III.10.H.5.a. through d., and III.10.H.5.f. [Sections III.10.H.1.a.i, III.10.H.1.a.ii, III.10.I.a.i, III.10.I.a.ii, Table III.10.H.A, Chp. 4E, Table 4E-2, DWP]

Table 3-15 LVP Exhausters Construction

Component Number/Location	Description	Material
LVP-EXHR-00001A/L-0304C	Melter Offgas Exhauster	Stainless Steel
LVP-EXHR-00001B/L-0304D	Melter Offgas Exhauster	Stainless Steel
LVP-EXHR-00001C/L-0304E	Melter Offgas Exhauster	Stainless Steel

Basis Discussion: Important containment features are delineated and described in these appendices with some specifics covered by construction requirements identified in this document.

Verification: Construction/installation verification is expected to be achieved through the following:

Verif. Method	Verif. By	Plan	Notes/Comments
R/I	**ENV**	Review completed independent qualified inspector installation packages. Perform walkdown as necessary to complete verification.	

3.11.5.2 Handling and Installation Procedures

Requirement: The Permittees must ensure that proper handling procedures are adhered to in order to prevent damage to the LVP exhausters during installation. Prior to covering, enclosing, or placing the new LVP exhausters in use, an independent, qualified, installation inspector or an independent, qualified, registered professional engineer, either of whom is trained and experienced in the proper installation of similar systems or components, must inspect the system for the presence of any of the following items:

- Weld breaks.
- Punctures.
- Scrapes of protective coatings.
- Cracks.
- Corrosion.
- Other structural damage or inadequate construction/installation.

All discrepancies must be remedied before the LAW Vitrification System is covered, enclosed, or placed in use [WAC 173-303-640(3)(c), in accordance with WAC 173-303-680(2) and (3)]. [Section III.10.H.1.a.iv, III.10.I.1.a.iv, DWP]

Basis Discussion: This requirement is derived from the Washington Administrative Code (WAC) Dangerous Waste Regulations at WAC Chapter 173-303, specifically the Tank System regulations in WAC 173-303-640.

These regulatory requirements have been incorporated into the Dangerous Waste Permit, WTP- Operating Unit Group 10, WA 7890008967, as permit conditions III.10.H.1.a.iv and III.10.I.1.a.iv.

Verification: Construction/installation verification is expected to be achieved through the following:

Verif. Method	Verif. By	Plan	Notes/Comments
R/I	ENV	Review completed independent qualified inspector installation packages. Perform walkdown as necessary to complete verification.	

3.11.5.3 Test for Tightness

Requirement: The Permittees must test for tightness the LVP exhausters, prior to being covered, enclosed, or placed into use. If the LVP exhausters are found not to be tight, all repairs necessary to remedy the leak(s) in the system must be performed prior to the LAW Vitrification System being covered, enclosed, or placed in use [WAC 173-303-640(3)(e), in accordance with WAC 173-303-680(2) and (3)]. [Section III.10.H.1.a.vi, DWP]

Basis Discussion: This requirement is derived from the Washington Administrative Code (WAC) Dangerous Waste Regulations at WAC Chapter 173-303, specifically the Tank System regulations in WAC 173-303-640. These regulatory requirements have been incorporated into the Dangerous Waste Permit, WTP- Operating Unit Group 10, WA 7890008967, as permit condition III.10.H.1.a.vi.

Verification: Construction/installation verification is expected to be achieved through the following:

Verif. Method	Verif. By	Plan	Notes/Comments
R/I	ENV	Review completed installation packages documentation to ensure the tightness testing was completed. Perform walkdown as necessary to complete verification.	

3.11.5.4 Support and Protection

Requirement: The Permittees must ensure the LVP exhausters are supported and protected against physical damage and excessive stress due to settlement, vibration, expansion, or contraction [WAC 173-303-640(3)(f), in accordance with WAC 173-303-680(2) and (3)]. [Section III.10.H.1.a.vii, DWP]

Basis Discussion: This requirement is derived from the Washington Administrative Code (WAC) Dangerous Waste Regulations at WAC Chapter 173-303, specifically the Tank System regulations in WAC 173-303-640. These regulatory requirements have been incorporated into the Dangerous Waste Permit, WTP- Operating Unit Group 10, WA 7890008967, as permit condition III.10.H.1.a.vii.

Verification: Construction/installation verification is expected to be achieved through the following:

Verif. Method	Verif. By	Plan	Notes/Comments
R/I	ENV	Review completed installation packages and nonconformance reports and construction deficiency reports to confirm the plant was constructed in accordance with the approved designs, plans and	

Verif. Method	Verif. By	Plan	Notes/Comments
		specifications. Perform walkdown as necessary to complete verification.	

3.11.5.5 ~~Corrosion Protection~~Deleted

~~**Requirement:** The Permittees must provide the type and degree of corrosion protection recommended by an independent corrosion expert, based on the information provided in Operating Unit Group 10, Appendices 9.9 and 9.11 of this Permit, as approved pursuant to Permit Conditions III.10.H.5.b.i., III.10.H.5.b.iv., III.10.H.5.b.v., III.10.H.5.c.i., III.10.H.5.c.iv., III.10.H.5.c.v., III.10.H.5.d.i., III.10.H.5.d.iv., and III.10.H.5.d.v., or other corrosion protection if Ecology believes other corrosion protection is necessary to ensure the integrity of the LVP exhausters during use of the LAW Vitrification System. The installation of a corrosion protection system that is field fabricated must be supervised by an independent corrosion expert to ensure proper installation [WAC 173-303-640(3)(g), in accordance with WAC 173-303-680(2) and (3)]. [Section III.10.H.1.a.viii, DWP[WA7890008967_WTP_ID#480]]~~

~~**Basis Discussion:** This requirement is derived from the Washington Administrative Code (WAC) Dangerous Waste Regulations at WAC Chapter 173-303, specifically the Tank System regulations in WAC 173-303-640. These regulatory requirements have been incorporated into the Dangerous Waste Permit, WTP- Operating Unit Group 10, WA 7890008967, as permit condition III.10.H.1.a.viii.~~

~~This requirement is not applicable to tank systems with components that are not in contact with soil or water.~~

~~**Verification:** Construction/installation verification is expected to be achieved through the following:~~

~~Verif. Method~~	~~Verif. By~~	~~Plan~~	~~Notes/Comments~~
~~R~~	~~ENV~~	~~Review completed installation packages to verify the requirements corrosion protection are met.~~	

3.11.5.6 Monitors and Instrumentation

Requirement: All process monitors/instruments, as specified in Permit Table III.10.H.F (Table 3-16), as approved/modified pursuant to Permit Condition III.10.H.5, will be equipped with operational alarms to warn of deviation, or imminent deviation from the limits specified in Permit Table III.10.H.F. [Sections III.10.H.1.a.xiii, III.10.I.1.a.vii, Table III.10.H.F, DWP]

Table 3-16 LAW Vitrification System Waste Feed Cutoff Parameters (RESERVED)

Sub-system Designation	Instrument Tag Number	Parameter Description
RESERVED	RESERVED	RESERVED

Basis Discussion: None.

Verification: Construction/installation verification is expected to be achieved through the following:

Verif. Method	Verif. By	Plan	Notes/Comments
R/I	**ENV**	Review completed purchasing, installation and inspection documentation to verify instrumentation. Perform walkdown as necessary to complete verification.~~Review completed installation packages to verify instrument installation in accordance with the requirement.~~	

3.11.5.7 Prevention of Escaping Emissions

Requirement: The LVP exhausters are~~is~~ constructed with features that prevent escape of vapors, fumes, or other emissions into the air [WAC 173-303-806(4)(i)(i)(B) and WAC 173-303-640(5)(e), in accordance with WAC 173-303-680]. [Section III.10.H.1.a.xxix, DWP]

Basis Discussion: This requirement is derived from the Washington Administrative Code (WAC) Dangerous Waste Regulations at WAC Chapter 173-303, specifically the Tank System regulations in WAC 173-303-640. These regulatory requirements have been incorporated into the Dangerous Waste Permit, WTP- Operating Unit Group 10, WA 7890008967, as permit condition III.10.H.1.a.xxix.

Verification: Construction/installation verification is expected to be achieved through the following:

Verif. Method	Verif. By	Plan	Notes/Comments
R/I	**ENV**	Review as-built P&IDs to verify the system has a vapor collection system and has been constructed according to the design. Perform walkdown as necessary to complete verification.	

3.11.6 LVP HEPA Filters and Filter Housings

3.11.6.1 HEPA Filters and Filter Housings Construction

Requirement: The Permittees will construct the LVP HEPA filters and filter housings listed in Permit Tables III.10.H.A. (see Table 3-17), as approved/modified pursuant to Permit Condition III.10.H.5, as specified in Permit Condition III.10.H.1 and Operating Unit Group 10, Chapter 4 of this Permit, and Operating Unit Group 10, Appendices 9.1 through 9.15 and 9.17 of this Permit, as approved pursuant to Permit Conditions III.10.H.5.a. through d., and III.10.H.5.f. [Sections III.10.H.1.a.i, III.10.H.1.a.ii, III.10.I.a.i, III.10.I.a.ii, Table III.10.H.A, Chp. 4E, Table 4E-2, DWP]

Table 3-17 LVP HEPA Filters Construction

Component Number/Location	Description	Material
LVP-HEPA-00001A/L-0304H	Melter Offgas HEPA Filter	Synthetic Fibrous Materials/Stainless Steel
LVP-HEPA-00001B/L-0304H	Melter Offgas HEPA Filter	Synthetic Fibrous Materials/Stainless Steel
LVP-HEPA-00002A/L-0304H	Melter Offgas HEPA Filter	Synthetic Fibrous Materials/Stainless Steel
LVP-HEPA-00002B/L-0304H	Melter Offgas HEPA Filter	Synthetic Fibrous Materials/Stainless Steel

LVP-HEPA-00003A/L-0304H	Melter Offgas HEPA Filter	Synthetic Fibrous Materials/Stainless Steel

Basis Discussion: Important containment features are delineated and described in these appendices with some specifics covered by construction requirements identified in this document.

Verification: Construction/installation verification is expected to be achieved through the following:

Verif. Method	Verif. By	Plan	Notes/Comments
R/I	**ENV**	Review completed independent qualified inspector installation packages. Perform walkdown as necessary to complete verification.	

3.11.6.2 Handling and Installation Procedures

Requirement: The Permittees must ensure that proper handling procedures are adhered to in order to prevent damage to the LVP HEPA filters and filter housings during installation. Prior to covering, enclosing, or placing the new LVP HEPA filters and filter housings in use, an independent, qualified, installation inspector or an independent, qualified, registered professional engineer, either of whom is trained and experienced in the proper installation of similar systems or components, must inspect the system for the presence of any of the following items:

- Weld breaks.
- Punctures.
- Scrapes of protective coatings.
- Cracks.
- Corrosion.
- Other structural damage or inadequate construction/installation.

All discrepancies must be remedied before the LAW Vitrification System is covered, enclosed, or placed in use [WAC 173-303-640(3)(c), in accordance with WAC 173-303-680(2) and (3)]. [Section III.10.H.1.a.iv, III.10.I.1.a.iv, DWP]

Basis Discussion: This requirement is derived from the Washington Administrative Code (WAC) Dangerous Waste Regulations at WAC Chapter 173-303, specifically the Tank System regulations in WAC 173-303-640. These regulatory requirements have been incorporated into the Dangerous Waste Permit, WTP- Operating Unit Group 10, WA 7890008967, as permit conditions III.10.H.1.a.iv and III.10.I.1.a.iv.

Verification: Construction/installation verification is expected to be achieved through the following:

Verif. Method	Verif. By	Plan	Notes/Comments
R/I	**ENV**	Review completed independent qualified inspector installation packages. Perform walkdown as necessary to complete verification.	

3.11.6.3 Test for Tightness

Requirement: The Permittees must test for tightness the LVP HEPA filters and filter housings, prior to being covered, enclosed, or placed into use. If the LVP HEPA filters and filter housings are found not to be tight, all repairs necessary to remedy the leak(s) in the system must be performed prior to the LAW Vitrification System

being covered, enclosed, or placed in use [WAC 173-303-640(3)(e), in accordance with WAC 173-303-680(2) and (3)]. [Section III.10.H.1.a.vi, DWP]

Basis Discussion: This requirement is derived from the Washington Administrative Code (WAC) Dangerous Waste Regulations at WAC Chapter 173-303, specifically the Tank System regulations in WAC 173-303-640. These regulatory requirements have been incorporated into the Dangerous Waste Permit, WTP- Operating Unit Group 10, WA 7890008967, as permit condition III.10.H.1.a.vi.

Verification: Construction/installation verification is expected to be achieved through the following:

Verif. Method	Verif. By	Plan	Notes/Comments
R/I	**ENV**	Review completed installation packages documentation to ensure the tightness testing was completed. Perform walkdown as necessary to complete verification.	

3.11.6.4 Support and Protection

Requirement: The Permittees must ensure the LVP HEPA filters and filter housings are supported and protected against physical damage and excessive stress due to settlement, vibration, expansion, or contraction [WAC 173-303-640(3)(f), in accordance with WAC 173-303-680(2) and (3)]. [Section III.10.H.1.a.vii, DWP]

Basis Discussion: This requirement is derived from the Washington Administrative Code (WAC) Dangerous Waste Regulations at WAC Chapter 173-303, specifically the Tank System regulations in WAC 173-303-640. These regulatory requirements have been incorporated into the Dangerous Waste Permit, WTP- Operating Unit Group 10, WA 7890008967, as permit condition III.10.H.1.a.vii.

Verification: Construction/installation verification is expected to be achieved through the following:

Verif. Method	Verif. By	Plan	Notes/Comments
R/I	**ENV**	Review completed installation packages and nonconformance reports and construction deficiency reports to confirm the plant was constructed in accordance with the approved designs, plans and specifications. Perform walkdown as necessary to complete verification.	

3.11.6.5 ~~Corrosion Protection~~Deleted

~~**Requirement:** The Permittees must provide the type and degree of corrosion protection recommended by an independent corrosion expert, based on the information provided in Operating Unit Group 10, Appendices 9.9 and 9.11 of this Permit, as approved pursuant to Permit Conditions III.10.H.5.b.i., III.10.H.5.b.iv., III.10.H.5.b.v., III.10.H.5.c.i., III.10.H.5.c.iv., III.10.H.5.c.v., III.10.H.5.d.i., III.10.H.5.d.iv., and III.10.H.5.d.v., or other corrosion protection if Ecology believes other corrosion protection is necessary to ensure the integrity of the LVP HEPA filters during use of the LAW Vitrification System. The installation of a corrosion protection system that is field fabricated must be supervised by an independent corrosion expert to ensure proper installation [WAC 173-303-640(3)(g), in accordance with WAC 173-303-680(2) and (3)]. [Section III.10.H.1.a.viii, DWP[WA7890008967_WTP_ID#480]]~~

~~**Basis Discussion:** This requirement is derived from the Washington Administrative Code (WAC) Dangerous Waste Regulations at WAC Chapter 173-303, specifically the Tank System regulations in WAC 173-303-640. These regulatory requirements have been incorporated into the Dangerous Waste Permit, WTP- Operating Unit Group 10, WA 7890008967, as permit condition III.10.H.1.a.viii.~~

~~This requirement is not applicable to tank systems with components that are not in contact with soil or water.~~

~~**Verification:** Construction/installation verification is expected to be achieved through the following:~~

~~Verif. Method~~	~~Verif. By~~	~~Plan~~	~~Notes/Comments~~
~~R~~	~~ENV~~	~~Review completed installation packages to verify the requirements corrosion protection are met.~~	

3.11.6.6 Monitors and Instrumentation

Requirement: All process monitors/instruments, as specified in Permit Table III.10.H.F (Table 3-18), as approved/modified pursuant to Permit Condition III.10.H.5, will be equipped with operational alarms to warn of deviation, or imminent deviation from the limits specified in Permit Table III.10.H.F. [Sections III.10.H.1.a.xiii, III.10.I.1.a.vii, Table III.10.H.F, DWP]

Table 3-18 LAW Vitrification System Waste Feed Cutoff Parameters (RESERVED)

Sub-system Designation	Instrument Tag Number	Parameter Description
RESERVED	RESERVED	RESERVED

Basis Discussion: None.

Verification: Construction/installation verification is expected to be achieved through the following:

Verif. Method	Verif. By	Plan	Notes/Comments
R/I	ENV	Review completed purchasing, installation and inspection documentation to verify instrumentation. Perform walkdown as necessary to complete verification.~~Review completed installation packages to verify instrument installation in accordance with the requirement.~~	

3.11.6.7 Prevention of Escaping Emissions

Requirement: The LVP HEPA filters and filter housings are~~is~~ constructed with features that prevent escape of vapors, fumes, or other emissions into the air [WAC 173-303-806(4)(i)(i)(B) and WAC 173-303-640(5)(e), in accordance with WAC 173-303-680]. [Section III.10.H.1.a.xxix, DWP]

Basis Discussion: This requirement is derived from the Washington Administrative Code (WAC) Dangerous Waste Regulations at WAC Chapter 173-303, specifically the Tank System regulations in WAC 173-303-640. These regulatory requirements have been incorporated into the Dangerous Waste Permit, WTP- Operating Unit Group 10, WA 7890008967, as permit condition III.10.H.1.a.xxix.

Verification: Construction/installation verification is expected to be achieved through the following:

Verif. Method	Verif. By	Plan	Notes/Comments
R/I	**ENV**	Review as-built P&IDs to verify the system has a vapor collection system and has been constructed according to the design. Perform walkdown as necessary to complete verification.	

3.11.7 LVP HEPA Preheaters

3.11.7.1 Preheaters Construction

Requirement: The Permittees will construct the LVP HEPA preaheaters listed in Permit Tables III.10.H.A and B. (see Table 3-19), as approved/modified pursuant to Permit Condition III.10.H.5, as specified in Permit Condition III.10.H.1 and Operating Unit Group 10, Chapter 4 of this Permit, and Operating Unit Group 10, Appendices 9.1 through 9.15 and 9.17 of this Permit, as approved pursuant to Permit Conditions III.10.H.5.a. through d., and III.10.H.5.f. [Sections III.10.H.1.a.i, III.10.H.1.a.ii, III.10.I.a.i, III.10.I.a.ii, Table III.10.H.A, Chp. 4E, Table 4E-2, DWP]

Table 3-19 LVP HEPA Preheaters Construction

Component Number/Location	Description	Material
LVP-HTR-00001A/L-0304H	Melter Offgas HEPA Preheater	Stainless Steel/Incoloy 800
LVP-HTR-~~00001B~~00003A/L-0304H	Melter Offgas HEPA Preheater	Stainless Steel/Incoloy 800

Basis Discussion: Important containment features are delineated and described in these appendices with some specifics covered by construction requirements identified in this document.

Verification: Construction/installation verification is expected to be achieved through the following:

Verif. Method	Verif. By	Plan	Notes/Comments
R/I	**ENV**	Review completed independent qualified inspector installation packages. Perform walkdown as necessary to complete verification.	

3.11.7.2 Handling and Installation Procedures

Requirement: The Permittees must ensure that proper handling procedures are adhered to in order to prevent damage to the LVP heaters during installation. Prior to covering, enclosing, or placing the new LVP HEPA Preheaters in use, an independent, qualified, installation inspector or an independent, qualified, registered professional engineer, either of whom is trained and experienced in the proper installation of similar systems or components, must inspect the system for the presence of any of the following items:

- Weld breaks.
- Punctures.
- Scrapes of protective coatings.
- Cracks.

- Corrosion.
- Other structural damage or inadequate construction/installation.

All discrepancies must be remedied before the LAW Vitrification System is covered, enclosed, or placed in use [WAC 173-303-640(3)(c), in accordance with WAC 173-303-680(2) and (3)]. [Section III.10.H.1.a.iv, III.10.I.1.a.iv, DWP]

Basis Discussion: This requirement is derived from the Washington Administrative Code (WAC) Dangerous Waste Regulations at WAC Chapter 173-303, specifically the Tank System regulations in WAC 173-303-640. These regulatory requirements have been incorporated into the Dangerous Waste Permit, WTP- Operating Unit Group 10, WA 7890008967, as permit conditions III.10.H.1.a.iv and III.10.I.1.a.iv.

Verification: Construction/installation verification is expected to be achieved through the following:

Verif. Method	Verif. By	Plan	Notes/Comments
R/I	**ENV**	Review completed independent qualified inspector installation packages. Perform walkdown as necessary to complete verification.	

3.11.7.3 Test for Tightness

Requirement: The Permittees must test for tightness the LVP HEPA Preheaters, prior to being covered, enclosed, or placed into use. If the LVP heaters are found not to be tight, all repairs necessary to remedy the leak(s) in the system must be performed prior to the LAW Vitrification System being covered, enclosed, or placed in use [WAC 173-303-640(3)(e), in accordance with WAC 173-303-680(2) and (3)]. [Section III.10.H.1.a.vi, DWP]

Basis Discussion: This requirement is derived from the Washington Administrative Code (WAC) Dangerous Waste Regulations at WAC Chapter 173-303, specifically the Tank System regulations in WAC 173-303-640. These regulatory requirements have been incorporated into the Dangerous Waste Permit, WTP- Operating Unit Group 10, WA 7890008967, as permit condition III.10.H.1.a.vi.

Verification: Construction/installation verification is expected to be achieved through the following:

Verif. Method	Verif. By	Plan	Notes/Comments
R/I	**ENV**	Review completed installation packages documentation to ensure the tightness testing was completed. Perform walkdown as necessary to complete verification.	

3.11.7.4 Support and Protection

Requirement: The Permittees must ensure the LVP HEPA Preheaters are supported and protected against physical damage and excessive stress due to settlement, vibration, expansion, or contraction [WAC 173-303-640(3)(f), in accordance with WAC 173-303-680(2) and (3)]. [Section III.10.H.1.a.vii, DWP]

Basis Discussion: This requirement is derived from the Washington Administrative Code (WAC) Dangerous Waste Regulations at WAC Chapter 173-303, specifically the Tank System regulations in WAC 173-303-640. These regulatory requirements have been incorporated into the Dangerous Waste Permit, WTP- Operating Unit Group 10, WA 7890008967, as permit condition III.10.H.1.a.vii.

Verification: Construction/installation verification is expected to be achieved through the following:

Verif. Method	Verif. By	Plan	Notes/Comments
R/I	ENV	Review completed installation packages and nonconformance reports and construction deficiency reports to confirm the plant was constructed in accordance with the approved designs, plans and specifications. Perform walkdown as necessary to complete verification.	

3.11.7.5 ~~Corrosion Protection~~Deleted

~~**Requirement:** The Permittees must provide the type and degree of corrosion protection recommended by an independent corrosion expert, based on the information provided in Operating Unit Group 10, Appendices 9.9 and 9.11 of this Permit, as approved pursuant to Permit Conditions III.10.H.5.b.i., III.10.H.5.b.iv., III.10.H.5.b.v., III.10.H.5.c.i., III.10.H.5.c.iv., III.10.H.5.c.v., III.10.H.5.d.i., III.10.H.5.d.iv., and III.10.H.5.d.v., or other corrosion protection if Ecology believes other corrosion protection is necessary to ensure the integrity of the LVP HEPA Preheaters during use of the LAW Vitrification System. The installation of a corrosion protection system that is field fabricated must be supervised by an independent corrosion expert to ensure proper installation [WAC 173-303-640(3)(g), in accordance with WAC 173-303-680(2) and (3)]. [Section III.10.H.1.a.viii, DWP[WA7890008967_WTP_ID#480]]~~

~~**Basis Discussion:** This requirement is derived from the Washington Administrative Code (WAC) Dangerous Waste Regulations at WAC Chapter 173-303, specifically the Tank System regulations in WAC 173-303-640. These regulatory requirements have been incorporated into the Dangerous Waste Permit, WTP- Operating Unit Group 10, WA 7890008967, as permit condition III.10.H.1.a.viii.~~

~~This requirement is not applicable to tank systems with components that are not in contact with soil or water.~~

~~**Verification:** Construction/installation verification is expected to be achieved through the following:~~

~~Verif. Method~~	~~Verif. By~~	~~Plan~~	~~Notes/Comments~~
~~R~~	~~ENV~~	~~Review completed installation packages to verify the requirements corrosion protection are met.~~	

3.11.7.6 Monitors and Instrumentation

Requirement: All process monitors/instruments, as specified in Permit Table III.10.H.F (Table 3-20), as approved/modified pursuant to Permit Condition III.10.H.5, will be equipped with operational alarms to warn of deviation, or imminent deviation from the limits specified in Permit Table III.10.H.F. [Sections III.10.H.1.a.xiii, III.10.I.1.a.vii, Table III.10.H.F, DWP]

Table 3-20 LAW Vitrification System Waste Feed Cutoff Parameters (RESERVED)

Sub-system Designation	Instrument Tag Number	Parameter Description
RESERVED	RESERVED	RESERVED

Basis Discussion: None.

Verification: Construction/installation verification is expected to be achieved through the following:

Verif. Method	Verif. By	Plan	Notes/Comments
R/I	**ENV**	Review completed purchasing, installation and inspection documentation to verify instrumentation. Perform walkdown as necessary to complete verification.~~Review completed installation packages to verify instrument installation in accordance with the requirement.~~	

3.11.7.7 Prevention of Escaping Emissions

Requirement: The LVP HEPA preheaters are~~is~~ constructed with features that prevent escape of vapors, fumes, or other emissions into the air [WAC 173-303-806(4)(i)(i)(B) and WAC 173-303-640(5)(e), in accordance with WAC 173-303-680]. [Section III.10.H.1.a.xxix, DWP]

Basis Discussion: This requirement is derived from the Washington Administrative Code (WAC) Dangerous Waste Regulations at WAC Chapter 173-303, specifically the Tank System regulations in WAC 173-303-640. These regulatory requirements have been incorporated into the Dangerous Waste Permit, WTP- Operating Unit Group 10, WA 7890008967, as permit condition III.10.H.1.a.xxix.

Verification: Construction/installation verification is expected to be achieved through the following:

Verif. Method	Verif. By	Plan	Notes/Comments
R/I	**ENV**	Review as-built P&IDs to verify the system has a vapor collection system and has been constructed according to the design. Perform walkdown as necessary to complete verification.	

3.11.8 LVP Scrubber (Caustic-Offgas Submerged Bed)

3.11.8.1 Offgas Caustic Scrubber Construction

Requirement: The Permittees will construct the LVP offgas caustic scrubber listed in Permit Tables III.10.H.A and B. (see Table 3-21), as approved/modified pursuant to Permit Condition III.10.H.5, as specified in Permit Condition III.10.H.1 and Operating Unit Group 10, Chapter 4 of this Permit, and Operating Unit Group 10, Appendices 9.1 through 9.15 and 9.17 of this Permit, as approved pursuant to Permit Conditions III.10.H.5.a. through d., and III.10.H.5.f. [Sections III.10.H.1.a.i, III.10.H.1.a.ii, III.10.I.a.i, III.10.I.a.ii, Table III.10.H.A, Chp. 4E, Table 4E-2, DWP]

Table 3-21 LVP Offgas Caustic Scrubber Construction

Component Number/Location	Description	Material	Total Volume (US Gallons)
LVP-SCB-00001/ L-0304F	Melter Offgas Caustic Scrubber	Hastelloy/Metal Intalox Packing/Stainless Steel	TBD

Basis Discussion: Important containment features are delineated and described in these appendices with some specifics covered by construction requirements identified in this document.

Verification: Construction/installation verification is expected to be achieved through the following:

Verif. Method	Verif. By	Plan	Notes/Comments
R/I	**ENV**	Perform a review of the design documentation, construction purchasing, and receipt inspection documentation to verify conformance to the permitted design. Perform walkdown as necessary to complete verification~~Perform a permitted facility document review of DMWU system to verify construction and installation is in compliance with the permitted design.~~	

3.11.8.2 Handling and Installation Procedures

Requirement: The Permittees must ensure that proper handling procedures are adhered to in order to prevent damage to the LVP offgas caustic scrubber during installation. Prior to covering, enclosing, or placing the new LVP scrubber in use, an independent, qualified, installation inspector or an independent, qualified, registered professional engineer, either of whom is trained and experienced in the proper installation of similar systems or components, must inspect the system for the presence of any of the following items:

- Weld breaks.
- Punctures.
- Scrapes of protective coatings.
- Cracks.
- Corrosion.
- Other structural damage or inadequate construction/installation.

All discrepancies must be remedied before the LAW Vitrification System is covered, enclosed, or placed in use [WAC 173-303-640(3)(c), in accordance with WAC 173-303-680(2) and (3)]. [Section III.10.H.1.a.iv, III.10.I.1.a.iv, DWP]

Basis Discussion: This requirement is derived from the Washington Administrative Code (WAC) Dangerous Waste Regulations at WAC Chapter 173-303, specifically the Tank System regulations in WAC 173-303-640. These regulatory requirements have been incorporated into the Dangerous Waste Permit, WTP- Operating Unit Group 10, WA 7890008967, as permit conditions III.10.H.1.a.iv and III.10.I.1.a.iv.

Verification: Construction/installation verification is expected to be achieved through the following:

Verif. Method	Verif. By	Plan	Notes/Comments
R/I	**ENV**	Review completed independent qualified inspector installation packages. Perform walkdown as necessary to complete verification.	

3.11.8.3 Test for Tightness

Requirement: The Permittees must test for tightness the LVP offgas caustic scrubber, prior to being covered, enclosed, or placed into use. If the LVP scrubber is~~are~~ found not to be tight, all repairs necessary to remedy the leak(s) in the system must be performed prior to the LAW Vitrification System being covered, enclosed, or placed in use [WAC 173-303-640(3)(e), in accordance with WAC 173-303-680(2) and (3)]. [Section III.10.H.1.a.vi, DWP]

Basis Discussion: This requirement is derived from the Washington Administrative Code (WAC) Dangerous Waste Regulations at WAC Chapter 173-303, specifically the Tank System regulations in WAC 173-303-640. These regulatory requirements have been incorporated into the Dangerous Waste Permit, WTP- Operating Unit Group 10, WA 7890008967, as permit condition III.10.H.1.a.vi.

Verification: Construction/installation verification is expected to be achieved through the following:

Verif. Method	Verif. By	Plan	Notes/Comments
R/I	ENV	Review completed installation packages documentation to ensure the tightness testing was completed. Perform walkdown as necessary to complete verification.	

3.11.8.4 Support and Protection

Requirement: The Permittees must ensure the LVP offgas caustic scrubber is~~are~~ supported and protected against physical damage and excessive stress due to settlement, vibration, expansion, or contraction [WAC 173-303-640(3)(f), in accordance with WAC 173-303-680(2) and (3)]. [Section III.10.H.1.a.vii, DWP]

Basis Discussion: This requirement is derived from the Washington Administrative Code (WAC) Dangerous Waste Regulations at WAC Chapter 173-303, specifically the Tank System regulations in WAC 173-303-640. These regulatory requirements have been incorporated into the Dangerous Waste Permit, WTP- Operating Unit Group 10, WA 7890008967, as permit condition III.10.H.1.a.vii.

Verification: Construction/installation verification is expected to be achieved through the following:

Verif. Method	Verif. By	Plan	Notes/Comments
R/I	ENV	Review completed installation packages and nonconformance reports and construction deficiency reports to confirm the plant was constructed in accordance with the approved designs, plans and specifications. Perform walkdown as necessary to complete verification.	

3.11.8.5 LVP Offgas Caustic Scrubber Overflow Prevention Control

Requirement: The LVP offgas caustic scrubber shall be constructed with the appropriate instrumentation to allow for the control and prevention of overflow from the tank or containment systems. See Table 3-22 for the overflow instruments. [Section III.10.E.9.e.iv, DWP[WA7890008967_WTP ID#358]]

Table 3-22 LVP Offgas Caustic Scrubber Overflow Prevention Controls

Monitoring/Control Parameter	Type of Instrument/ Control Device	Instrument/Control Device Tag Number
LVP Offgas Caustic Scrubber LVP-SCB-00001	Level Transmitters	LT-0090
	Level Indicators	LI-0090
	Level Switch High High	LSHH-0090
	Level Alarm High High	LAHH-0090

Basis Discussion: Table 3-22 is developed from 24590-LAW-PER-J-04-0002, *System Logic Description for Low-Activity Waste Facility – LAW Secondary Offgas Process (LVP) System*. This requirement is derived from the Washington Administrative Code (WAC) Dangerous Waste Regulations at WAC Chapter 173-303, specifically the Tank System regulations in WAC 173-303-640(5)(b). These regulatory requirements have been incorporated into the Dangerous Waste Permit, WTP- Operating Unit Group 10, WA 7890008967, as permit condition III.10.E.9.e.iv.

Verification: Construction/installation verification is expected to be achieved through the following:

Verif. Method	Verif. By	Plan	Notes/Comments
R/I	ENV	Review completed purchasing, installation and inspection documentation to verify instrumentation. Perform walkdown as necessary to complete verification.~~Review the Instrument Data Sheets for the instruments to verify Instruments in Table 3-22.~~	

3.11.8.6 ~~Corrosion Protection~~Deleted

~~**Requirement:** The Permittees must provide the type and degree of corrosion protection recommended by an independent corrosion expert, based on the information provided in Operating Unit Group 10, Appendices 9.9 and 9.11 of this Permit, as approved pursuant to Permit Conditions III.10.H.5.b.i., III.10.H.5.b.iv., III.10.H.5.b.v., III.10.H.5.c.i., III.10.H.5.c.iv., III.10.H.5.c.v., III.10.H.5.d.i., III.10.H.5.d.iv., and III.10.H.5.d.v., or other corrosion protection if Ecology believes other corrosion protection is necessary to ensure the integrity of the LVP offgas caustic scrubber during use of the LAW Vitrification System. The installation of a corrosion protection system that is field fabricated must be supervised by an independent corrosion expert to ensure proper installation [WAC 173-303-640(3)(g), in accordance with WAC 173-303-680(2) and (3)]. [Section III.10.H.1.a.viii, DWP[WA7890008967_WTP_ID#480]]~~

~~**Basis Discussion:** This requirement is derived from the Washington Administrative Code (WAC) Dangerous Waste Regulations at WAC Chapter 173-303, specifically the Tank System regulations in WAC 173-303-640. These regulatory requirements have been incorporated into the Dangerous Waste Permit, WTP- Operating Unit Group 10, WA 7890008967, as permit condition III.10.H.1.a.viii.~~

~~This requirement is not applicable to tank systems with components that are not in contact with soil or water.~~

~~**Verification:** Construction/installation verification is expected to be achieved through the following:~~

~~Verif. Method~~	~~Verif. By~~	~~Plan~~	~~Notes/Comments~~
~~R~~	~~ENV~~	~~Review completed installation packages to verify the requirements corrosion protection are met.~~	

3.11.8.7 Monitors and Instrumentation

Requirement: All process monitors/instruments, as specified in Permit Table III.10.H.F (Table 3-23), as approved/modified pursuant to Permit Condition III.10.H.5, will be equipped with operational alarms to warn of deviation, or imminent deviation from the limits specified in Permit Table III.10.H.F. [Sections III.10.H.1.a.xiii, III.10.I.1.a.vii, Table III.10.H.F, DWP]

Table 3-23 LAW Vitrification System Waste Feed Cutoff Parameters (RESERVED)

Sub-system Designation	Instrument Tag Number	Parameter Description
RESERVED	RESERVED	RESERVED

Basis Discussion: None.

Verification: Construction/installation verification is expected to be achieved through the following:

Verif. Method	Verif. By	Plan	Notes/Comments
R/I	**ENV**	Review completed purchasing, installation and inspection documentation to verify instrumentation. Perform walkdown as necessary to complete verification.~~Review completed installation packages to verify instrument installation in accordance with the requirement.~~	

3.11.8.8 Prevention of Escaping Emissions

Requirement: The LVP offgas Caustic scrubber is constructed with features that prevent escape of vapors, fumes, or other emissions into the air [WAC 173-303-806(4)(i)(i)(B) and WAC 173-303-640(5)(e), in accordance with WAC 173-303-680]. [Section III.10.H.1.a.xxix, DWP]

Basis Discussion: This requirement is derived from the Washington Administrative Code (WAC) Dangerous Waste Regulations at WAC Chapter 173-303, specifically the Tank System regulations in WAC 173-303-640. These regulatory requirements have been incorporated into the Dangerous Waste Permit, WTP- Operating Unit Group 10, WA 7890008967, as permit condition III.10.H.1.a.xxix.

Verification: Construction/installation verification is expected to be achieved through the following:

Verif. Method	Verif. By	Plan	Notes/Comments
R/I	**ENV**	Review as-built P&IDs to verify the system has a vapor collection system and has been constructed according to the design. Perform walkdown as necessary to complete verification.	

3.11.9 LVP Selective Catalytic Oxididation Unit

3.11.9.1 Selective Catalytic Oxidiation Construction

Requirement: The Permittees will construct the LVP selective catalytic oxidizer listed in Permit Tables III.10.H.A and B. (see Table 3-24), as approved/modified pursuant to Permit Condition III.10.H.5, as specified in Permit Condition III.10.H.1 and Operating Unit Group 10, Chapter 4 of this Permit, and Operating Unit Group 10, Appendices 9.1 through 9.15 and 9.17 of this Permit, as approved pursuant to Permit Conditions III.10.H.5.a. through d., and III.10.H.5.f. [Sections III.10.H.1.a.i, III.10.H.1.a.ii, III.10.I.a.i, III.10.I.a.ii, Table III.10.H.A, Chp. 4E, Table 4E-2, DWP]

Table 3-24 Selective Catalytic Oxidizer Construction

Component Number/Location	Description	Material
LVP-SCO-00001/ L-0304F (on LVP-SKID-00002)	Thermal Catalytic Oxidizer	Stainless Steel

Basis Discussion: Important containment features are delineated and described in these appendices with some specifics covered by construction requirements identified in this document.

Verification: Construction/installation verification is expected to be achieved through the following:

Verif. Method	Verif. By	Plan	Notes/Comments
R/I	**ENV**	Perform a review of the design documentation, construction purchasing, and receipt inspection documentation to verify conformance to the permitted design. Perform walkdown as necessary to complete verification~~Perform a permitted facility document review of DMWU system to verify construction and installation is in compliance with the permitted design.~~	

3.11.9.2 Handling and Installation Procedures

Requirement: The Permittees must ensure that proper handling procedures are adhered to in order to prevent damage to the LVP selective catalytic oxidizer during installation. Prior to covering, enclosing, or placing the new LVP selective catalytic oxidizer in use, an independent, qualified, installation inspector or an independent, qualified, registered professional engineer, either of whom is trained and experienced in the proper installation of similar systems or components, must inspect the system for the presence of any of the following items:

- Weld breaks.
- Punctures.
- Scrapes of protective coatings.
- Cracks.
- Corrosion.
- Other structural damage or inadequate construction/installation.

All discrepancies must be remedied before the LAW Vitrification System is covered, enclosed, or placed in use [WAC 173-303-640(3)(c), in accordance with WAC 173-303-680(2) and (3)]. [Section III.10.H.1.a.iv, III.10.I.1.a.iv, DWP]

Basis Discussion: This requirement is derived from the Washington Administrative Code (WAC) Dangerous Waste Regulations at WAC Chapter 173-303, specifically the Tank System regulations in WAC 173-303-640. These regulatory requirements have been incorporated into the Dangerous Waste Permit, WTP- Operating Unit Group 10, WA 7890008967, as permit conditions III.10.H.1.a.iv and III.10.I.1.a.iv.

Verification: Construction/installation verification is expected to be achieved through the following:

Verif. Method	Verif. By	Plan	Notes/Comments
R/I	**ENV**	Review completed independent qualified inspector installation packages. Perform walkdown as necessary to complete verification.	

3.11.9.3 Test for Tightness

Requirement: The Permittees must test for tightness the LVP selective catalytic oxidizer, prior to being covered, enclosed, or placed into use. If the LVP selective catalytic oxidizer is~~are~~ found not to be tight, all repairs necessary to remedy the leak(s) in the system must be performed prior to the LAW Vitrification System being covered, enclosed, or placed in use [WAC 173-303-640(3)(e), in accordance with WAC 173-303-680(2) and (3)]. [Section III.10.H.1.a.vi, DWP]

Basis Discussion: This requirement is derived from the Washington Administrative Code (WAC) Dangerous Waste Regulations at WAC Chapter 173-303, specifically the Tank System regulations in WAC 173-303-640. These regulatory requirements have been incorporated into the Dangerous Waste Permit, WTP- Operating Unit Group 10, WA 7890008967, as permit condition III.10.H.1.a.vi.

Verification: Construction/installation verification is expected to be achieved through the following:

Verif. Method	Verif. By	Plan	Notes/Comments
R/I	**ENV**	Review completed installation packages documentation to ensure the tightness testing was completed. Perform walkdown as necessary to complete verification.	

3.11.9.4 Support and Protection

Requirement: The Permittees must ensure the LVP selective catalytic oxidizer is~~are~~ supported and protected against physical damage and excessive stress due to settlement, vibration, expansion, or contraction [WAC 173-303-640(3)(f), in accordance with WAC 173-303-680(2) and (3)]. [Section III.10.H.1.a.vii, DWP]

Basis Discussion: This requirement is derived from the Washington Administrative Code (WAC) Dangerous Waste Regulations at WAC Chapter 173-303, specifically the Tank System regulations in WAC 173-303-640. These regulatory requirements have been incorporated into the Dangerous Waste Permit, WTP- Operating Unit Group 10, WA 7890008967, as permit condition III.10.H.1.a.vii.

Verification: Construction/installation verification is expected to be achieved through the following:

Verif. Method	Verif. By	Plan	Notes/Comments
R/I	**ENV**	Review completed installation packages and nonconformance reports and construction deficiency reports to confirm the plant was constructed in accordance with the approved designs, plans and specifications. Perform walkdown as necessary to complete verification.	

3.11.9.5 ~~Corrosion Protection~~Deleted

~~**Requirement:** The Permittees must provide the type and degree of corrosion protection recommended by an independent corrosion expert, based on the information provided in Operating Unit Group 10, Appendices 9.9 and 9.11 of this Permit, as approved pursuant to Permit Conditions III.10.H.5.b.i., III.10.H.5.b.iv., III.10.H.5.b.v., III.10.H.5.c.i., III.10.H.5.c.iv., III.10.H.5.c.v., III.10.H.5.d.i., III.10.H.5.d.iv., and III.10.H.5.d.v., or other corrosion protection if Ecology believes other corrosion protection is necessary to ensure the integrity of the LVP selective catalytic oxidizer during use of the LAW Vitrification System. The installation of a corrosion protection~~

~~system that is field fabricated must be supervised by an independent corrosion expert to ensure proper installation [WAC 173-303-640(3)(g), in accordance with WAC 173-303-680(2) and (3)]. [Section III.10.H.1.a.viii, DWP[WA7890008967_WTP_ID#480]]~~

~~**Basis Discussion:** This requirement is derived from the Washington Administrative Code (WAC) Dangerous Waste Regulations at WAC Chapter 173-303, specifically the Tank System regulations in WAC 173-303-640. These regulatory requirements have been incorporated into the Dangerous Waste Permit, WTP- Operating Unit Group 10, WA 7890008967, as permit condition III.10.H.1.a.viii.~~

~~This requirement is not applicable to tank systems with components that are not in contact with soil or water.~~

~~**Verification:** Construction/installation verification is expected to be achieved through the following:~~

~~Verif. Method~~	~~Verif. By~~	~~Plan~~	~~Notes/Comments~~
~~R~~	~~ENV~~	~~Review completed installation packages to verify the requirements corrosion protection are met.~~	

3.11.9.6 Monitors and Instrumentation

Requirement: All process monitors/instruments, as specified in Permit Table III.10.H.F (Table 3-25), as approved/modified pursuant to Permit Condition III.10.H.5, will be equipped with operational alarms to warn of deviation, or imminent deviation from the limits specified in Permit Table III.10.H.F. [Sections III.10.H.1.a.xiii, III.10.I.1.a.vii, Table III.10.H.F, DWP]

Table 3-25 LAW Vitrification System Waste Feed Cutoff Parameters (RESERVED)

Sub-system Designation	Instrument Tag Number	Parameter Description
RESERVED	RESERVED	RESERVED

Basis Discussion: None.

Verification: Construction/installation verification is expected to be achieved through the following:

Verif. Method	Verif. By	Plan	Notes/Comments
R/I	ENV	Review completed purchasing, installation and inspection documentation to verify instrumentation. Perform walkdown as necessary to complete verification.~~Review completed installation packages to verify instrument installation in accordance with the requirement.~~	

3.11.9.7 Prevention of Escaping Emissions

Requirement: The LVP selective catalytic oxidizer is constructed with features that prevent escape of vapors, fumes, or other emissions into the air [WAC 173-303-806(4)(i)(i)(B) and WAC 173-303-640(5)(e), in accordance with WAC 173-303-680]. [Section III.10.H.1.a.xxix, DWP]

Basis Discussion: This requirement is derived from the Washington Administrative Code (WAC) Dangerous Waste Regulations at WAC Chapter 173-303, specifically the Tank System regulations in WAC 173-303-640.

These regulatory requirements have been incorporated into the Dangerous Waste Permit, WTP- Operating Unit Group 10, WA 7890008967, as permit condition III.10.H.1.a.xxix.

Verification: Construction/installation verification is expected to be achieved through the following:

Verif. Method	Verif. By	Plan	Notes/Comments
R/I	ENV	Review as-built P&IDs to verify the system has a vapor collection system and has been constructed according to the design. Perform walkdown as necessary to complete verification.	

3.11.10 LVP Selective Catalytic Reduction Unit

3.11.10.1 LVP Selective Catalytic Reduction Unit Construction

Requirement: The Permittees will construct the LVP selective catalytic reduction unit listed in Permit Tables III.10.H.A and B. (see Table 3-26), as approved/modified pursuant to Permit Condition III.10.H.5, as specified in Permit Condition III.10.H.1 and Operating Unit Group 10, Chapter 4 of this Permit, and Operating Unit Group 10, Appendices 9.1 through 9.15 and 9.17 of this Permit, as approved pursuant to Permit Conditions III.10.H.5.a. through d., and III.10.H.5.f. [Sections III.10.H.1.a.i, III.10.H.1.a.ii, III.10.I.a.i, III.10.I.a.ii, Table III.10.H.A, Chp. 4E, Table 4E-2, DWP]

Table 3-26 Selective Catalytic Reduction Unit Construction

Component Number/Location	Description	Material
LVP-SCR-00001/L-0304F (on LVP-SKID-00002)	NO_x Selective Catalytic Reduction Unit	Stainless Steel
LVP-HTR-00002/L-0304F (on LVP-SKID-00002)	Catalytic Oxidizer Electric Heater	Stainless Steel
LVP-HX-00001/L-0304F (on LVP-SKID-00002)	Catalytic Oxidizer Heat Recovery Unit	Stainless Steel

Basis Discussion: Important containment features are delineated and described in these appendices with some specifics covered by construction requirements identified in this document.

Verification: Construction/installation verification is expected to be achieved through the following:

Verif. Method	Verif. By	Plan	Notes/Comments
R/I	ENV	Perform a review of the design documentation, construction purchasing, and receipt inspection documentation to verify conformance to the permitted design. Perform walkdown as necessary to complete verification~~Perform a permitted facility document review of DMWU system to verify construction and installation is in compliance with the permitted design.~~	

3.11.10.2 Handling and Installation Procedures

Requirement: The Permittees must ensure that proper handling procedures are adhered to in order to prevent damage to the LVP selective catalytic reduction unit during installation. Prior to covering, enclosing, or placing the new LVP selective catalytic reduction unit use, an independent, qualified, installation inspector or an independent, qualified, registered professional engineer, either of whom is trained and experienced in the proper

installation of similar systems or components, must inspect the system for the presence of any of the following items:

- Weld breaks.
- Punctures.
- Scrapes of protective coatings.
- Cracks.
- Corrosion.
- Other structural damage or inadequate construction/installation.

All discrepancies must be remedied before the LAW Vitrification System is covered, enclosed, or placed in use [WAC 173-303-640(3)(c), in accordance with WAC 173-303-680(2) and (3)]. [Section III.10.H.1.a.iv, III.10.I.1.a.iv, DWP]

Basis Discussion: This requirement is derived from the Washington Administrative Code (WAC) Dangerous Waste Regulations at WAC Chapter 173-303, specifically the Tank System regulations in WAC 173-303-640. These regulatory requirements have been incorporated into the Dangerous Waste Permit, WTP- Operating Unit Group 10, WA 7890008967, as permit conditions III.10.H.1.a.iv and III.10.I.1.a.iv.

Verification: Construction/installation verification is expected to be achieved through the following:

Verif. Method	Verif. By	Plan	Notes/Comments
R/I	**ENV**	Review completed independent qualified inspector installation packages. Perform walkdown as necessary to complete verification.	

3.11.10.3 Test for Tightness

Requirement: The Permittees must test for tightness the LVP selective catalytic reduction unit, prior to being covered, enclosed, or placed into use. If the LVP selective catalytic reduction unit are found not to be tight, all repairs necessary to remedy the leak(s) in the system must be performed prior to the LAW Vitrification System being covered, enclosed, or placed in use [WAC 173-303-640(3)(e), in accordance with WAC 173-303-680(2) and (3)]. [Section III.10.H.1.a.vi, DWP]

Basis Discussion: This requirement is derived from the Washington Administrative Code (WAC) Dangerous Waste Regulations at WAC Chapter 173-303, specifically the Tank System regulations in WAC 173-303-640. These regulatory requirements have been incorporated into the Dangerous Waste Permit, WTP- Operating Unit Group 10, WA 7890008967, as permit condition III.10.H.1.a.vi.

Verification: Construction/installation verification is expected to be achieved through the following:

Verif. Method	Verif. By	Plan	Notes/Comments
R/I	**ENV**	Review completed installation packages documentation to ensure the tightness testing was completed. Perform walkdown as necessary to complete verification.	

3.11.10.4 Support and Protection

Requirement: The Permittees must ensure the LVP selective catalytic reduction unit are supported and protected against physical damage and excessive stress due to settlement, vibration, expansion, or contraction [WAC 173-303-640(3)(f), in accordance with WAC 173-303-680(2) and (3)]. [Section III.10.H.1.a.vii, DWP]

Basis Discussion: This requirement is derived from the Washington Administrative Code (WAC) Dangerous Waste Regulations at WAC Chapter 173-303, specifically the Tank System regulations in WAC 173-303-640. These regulatory requirements have been incorporated into the Dangerous Waste Permit, WTP- Operating Unit Group 10, WA 7890008967, as permit condition III.10.H.1.a.vii.

Verification: Construction/installation verification is expected to be achieved through the following:

Verif. Method	Verif. By	Plan	Notes/Comments
R/I	**ENV**	Review completed installation packages and nonconformance reports and construction deficiency reports to confirm the plant was constructed in accordance with the approved designs, plans and specifications. Perform walkdown as necessary to complete verification.	

3.11.10.5 ~~Corrosion Protection~~Deleted

~~**Requirement:** The Permittees must provide the type and degree of corrosion protection recommended by an independent corrosion expert, based on the information provided in Operating Unit Group 10, Appendices 9.9 and 9.11 of this Permit, as approved pursuant to Permit Conditions III.10.H.5.b.i., III.10.H.5.b.iv., III.10.H.5.b.v., III.10.H.5.c.i., III.10.H.5.c.iv., III.10.H.5.c.v., III.10.H.5.d.i., III.10.H.5.d.iv., and III.10.H.5.d.v., or other corrosion protection if Ecology believes other corrosion protection is necessary to ensure the integrity of the LVP selective catalytic reduction unit during use of the LAW Vitrification System. The installation of a corrosion protection system that is field fabricated must be supervised by an independent corrosion expert to ensure proper installation [WAC 173-303-640(3)(g), in accordance with WAC 173-303-680(2) and (3)]. [Section III.10.H.1.a.viii, DWP[WA7890008967_WTP_ID#480]]~~

~~**Basis Discussion:** This requirement is derived from the Washington Administrative Code (WAC) Dangerous Waste Regulations at WAC Chapter 173-303, specifically the Tank System regulations in WAC 173-303-640. These regulatory requirements have been incorporated into the Dangerous Waste Permit, WTP- Operating Unit Group 10, WA 7890008967, as permit condition III.10.H.1.a.viii.~~

~~This requirement is not applicable to tank systems with components that are not in contact with soil or water.~~

~~**Verification:** Construction/installation verification is expected to be achieved through the following:~~

~~Verif. Method~~	~~Verif. By~~	~~Plan~~	~~Notes/Comments~~
~~**R**~~	~~**ENV**~~	~~Review completed installation packages to verify the requirements corrosion protection are met.~~	

3.11.10.6 Monitors and Instrumentation

Requirement: All process monitors/instruments, as specified in Permit Table III.10.H.F (Table 3-27), as approved/modified pursuant to Permit Condition III.10.H.5, will be equipped with operational alarms to warn of deviation, or imminent deviation from the limits specified in Permit Table III.10.H.F. [Sections III.10.H.1.a.xiii, III.10.I.1.a.vii, Table III.10.H.F, DWP]

Table 3-27 LAW Vitrification System Waste Feed Cutoff Parameters (RESERVED)

Sub-system Designation	Instrument Tag Number	Parameter Description
RESERVED	RESERVED	RESERVED

Basis Discussion: None.

Verification: Construction/installation verification is expected to be achieved through the following:

Verif. Method	Verif. By	Plan	Notes/Comments
R/I	**ENV**	Review completed purchasing, installation and inspection documentation to verify instrumentation. Perform walkdown as necessary to complete verification.~~Review completed installation packages to verify instrument installation in accordance with the requirement.~~	

3.11.10.7 Prevention of Escaping Emissions

Requirement: The LVP selective catalytic reduction is constructed with features that prevent escape of vapors, fumes, or other emissions into the air [WAC 173-303-806(4)(i)(i)(B) and WAC 173-303-640(5)(e), in accordance with WAC 173-303-680]. [Section III.10.H.1.a.xxix, DWP]

Basis Discussion: This requirement is derived from the Washington Administrative Code (WAC) Dangerous Waste Regulations at WAC Chapter 173-303, specifically the Tank System regulations in WAC 173-303-640. These regulatory requirements have been incorporated into the Dangerous Waste Permit, WTP- Operating Unit Group 10, WA 7890008967, as permit condition III.10.H.1.a.xxix.

Verification: Construction/installation verification is expected to be achieved through the following:

Verif. Method	Verif. By	Plan	Notes/Comments
R/I	**ENV**	Review as-built P&IDs to verify the system has a vapor collection system and has been constructed according to the design. Perform walkdown as necessary to complete verification.	

3.11.11 LOP/LVP Vessels

3.11.11.1 LAW Melter 1 LOP SBS Condensate Vessel (LOP-VSL-00001)

3.11.11.1.1 Vessels Handling and Installation Procedures

Requirement: The installation of the LOP-VSL-00001 shall be performed with proper handling procedures to prevent damage to the system during installation. Prior to covering, enclosing, or placing the LOP-VSL-00001 system or component, an independent, qualified installation inspector or an independent, qualified, registered professional engineer, either of whom is trained and experience in the proper installation of tank systems or components, must inspect the system as specified in WAC 173-303-640 (3)(c), WAC 173-303-640 (3)(h):

- Specify and document the handling or installation procedures to protect the integrity of the tank system. The procedures should prevent or detect the following defects:
    - weld breaks (WAC 173-303-640 (3)(c)(i))
    - punctures (WAC 173-303-640 (3)(c)(ii))
    - scrapes of protective coatings (WAC 173-303-640 (3)(c)(iii))
    - cracks (WAC 173-303-640 (3)(c)(iv))
    - corrosion (WAC 173-303-640 (3)(c)(v))
    - other structural damage or inadequate construction or installation (WAC 173-303-640(3)(c)(vi))
- Specify and document the remedies for any handling or installation procedure discrepancies identified before the tank system is covered, enclosed, or placed in use. (WAC 173-303-640(3)(c))

[Section III.10.E.3.a, Chp. 4.0, Section 4.2.5, DWP]

Basis Discussion: This requirement is derived from the Washington Administrative Code (WAC) Dangerous Waste Regulations at WAC Chapter 173-303, specifically the Tank System regulations in WAC 173-303-640. These regulatory requirements have been incorporated into the Dangerous Waste Permit, WTP- Operating Unit Group 10, WA 7890008967, as permit condition III.10.E.3.a (WAC 173-303-640(3)(c), WAC 173-303-640(3)(h)).

Verification: Construction/installation verification is expected to be achieved through the following:

Verif. Method	Verif. By	Plan	Notes/Comments
R/I	ENV	Review completed independent qualified inspector installation packages. Perform walkdown as necessary to complete verification.	

3.11.11.1.2 Vessel System Installation Inspection

Requirement: The independent tank system installation inspection and subsequent written statements will be certified pursuant to Permit Condition III.10.E.1.d., comply with all requirements of WAC 173-303-640(3)(h) and will consider, but not be limited to, the following tank system installation documentation:

- Field installation report with date of installation;
- Approved welding procedures;
- Welder qualifications and certification;
- Hydro-test reports, as applicable, in accordance with the American Society of Mechanical Engineers Boiler and Pressure Vessel Code, Section VIII, Division 1, American Petroleum Institute (API) Standard 620, or

Standard 650 as applicable;

- Tester credentials;
- Field inspector credentials;
- Field inspector reports;
- Field waiver reports; and
- Non-compliance reports and corrective action (including field waiver reports) and repair reports.

[Section III.10.E.3.g, DWP]

Basis Discussion: None.

Verification: Construction/installation verification is expected to be achieved through the following:

Verif. Method	Verif. By	Plan	Notes/Comments
R/I	ENV	Review completed installation packages for compliance documentation. Perform walkdown as necessary to complete verification.	

3.11.11.1.3 Vapor Collection System

Requirement: The LOP-VSL-00001 tank system is constructed with features that prevent escape of vapors, fumes, or other emissions into the air. [Section III.10.E.9.c.xii, DWP]

Basis Discussion: This requirement is derived from the Washington Administrative Code (WAC) Dangerous Waste Regulations at WAC Chapter 173-303, specifically the Tank System regulations in WAC 173-303-640. These regulatory requirements have been incorporated into the Dangerous Waste Permit, WTP- Operating Unit Group 10, WA 7890008967, as permit condition III.10.E.9.c.xii (WAC 173-303-640(5)(e)).

Verification: Construction/installation verification is expected to be achieved through the following:

Verif. Method	Verif. By	Plan	Notes/Comments
R/I	ENV	Review tank system as-built P&IDs to verify the system has a vapor collection system and has been constructed according to the design. Perform walkdown as necessary to complete verification.	

3.11.11.1.4 Vessel Construction

Requirement: The LOP-VSL-00001 construction and location shall be in accordance with the locations dimensions, capacities, material and appurtenances as shown the DWP permitted design as shown in Table 3-28. [Chp. 04, Table 4E-1, DWP]

Table 3-28 LAW Melter 1 SBS Condensate Vessel

Vessel Number/Location	Description	Material	Total Volume (US Gallons)	Approximate Dimensions Inside Diameter x Height or Length in feed and inches (tangent line/tangent line)
LOP-VSL-00001/ L-0124	Law Melter 1 SBS Condensate Vessel	Hastelloy	9,056	12 ft x 8 ft 2 in.

Basis Discussion: Locations, dimensions, capacities, material and appurtenances are~~is~~ provided in DWP Tables 4E-1.

Verification: Construction/installation verification is expected to be achieved through the following:

Verif. Method	Verif. By	Plan	Notes/Comments
R/I	**ENV**	Perform a review of the design documentation, construction purchasing, and receipt inspection documentation to verify conformance to the permitted design. Perform walkdown as necessary to complete verification~~Perform a review of the manufacturers data sheet to verify the material of construction and dimensions~~.	

3.11.11.1.5 Tightness Testing

Requirement: The Permittees must test for tightness for the LOP-VSL-00001 system prior to these components being covered, enclosed, or placed into use. If a tank system is found not to be tight, all repairs necessary to remedy the leak(s) in the system must be performed prior to the tank system being covered, enclosed, or placed in use. [Section III.10.E.3.c, DWP]

Basis Discussion: This requirement is derived from the Washington Administrative Code (WAC) Dangerous Waste Regulations at WAC Chapter 173-303, specifically the Tank System regulations in WAC 173-303-640. These regulatory requirements have been incorporated into the Dangerous Waste Permit, WTP- Operating Unit Group 10, WA 7890008967, as permit condition III.10.E.3.c.

Verification: Construction/installation verification is expected to be achieved through the following:

Verif. Method	Verif. By	Plan	Notes/Comments
R/I	**ENV**	Review completed installation packages documentation to ensure the tightness testing was completed. Perform walkdown as necessary to complete verification.	

3.11.11.1.6 LOP Melter 1 SBS Condensate Vessel Overflow Prevention Controls

Requirement: The melter 1 SBS condensate vessel shall be constructed with the appropriate instrumentation to allow for the control and prevention of overflow from the tank or containment systems. See Table 3-29 for the overflow instruments. [Section III.10.E.5.d, III.10.H.1.a.xvii, DWP]

Table 3-29 Melter 1 Condensate Vessel Overflow Prevention Controls

Monitoring/Control Parameter	Type of Instrument/Control Device	Instrument/Control Device Tag Number
Melter 1 SBS Condensate Vessel LOP-VSL-00001	Level Transmitter	LT-1018
	Level Indicators	LI-1018 LI-1018A
	Level Relay	LY-1018

Monitoring/Control Parameter	Type of Instrument/Control Device	Instrument/Control Device Tag Number
	Level Switch High High	LSHH-1018
	Level Switch Low Low	LSLL-1018
	Level Alarm High High	LAHH-1018
	Level Alarm Low Low	LALL-1018

Basis Discussion: Table 3-29 is developed from 24590-LAW-PER-J-03-003, *System Logic Description for Low-Activity Waste Facility – LAW Primary Offgas Process (LOP) System*. This requirement is derived from the Washington Administrative Code (WAC) Dangerous Waste Regulations at WAC Chapter 173-303, specifically the Tank System regulations in WAC 173-303-640(5)(b). These regulatory requirements have been incorporated into the Dangerous Waste Permit, WTP- Operating Unit Group 10, WA 7890008967, as permit conditions III.10.E.5.d and III.10.H.1.a.xvii.

Verification: Construction/installation verification is expected to be achieved through the following:

Verif. Method	Verif. By	Plan	Notes/Comments
R/I	**ENV**	Review completed purchasing, installation and inspection documentation to verify instrumentation. Perform walkdown as necessary to complete verification.~~Review the Instrument Data Sheets for the instruments to verify Instruments in Table 3-29.~~	

3.11.11.1.7 ~~Corrosion Protection~~Deleted

~~**Requirement**: The Permittees must provide the type and degree of corrosion protection for LOP-VSL-00001 recommended by an independent corrosion expert, based on the information provided in Operating Unit Group 10, Appendix 9.9, and 9.11 of this Permit, as approved pursuant to Permit Conditions III.10.E.9.b.i., III.10.E.9.b.iv., III.10.E.9.b.v., III.10.E.9.c.i., III.10.E.9.c.iv., III.10.E.9.c.v., III.10.E.9.d.i., III.10.E.9.d.iv., and III.10.E.9.d.v. or other corrosion protection if the Ecology believes other corrosion protection is necessary to ensure the integrity of the tank system during use of the tank system. The installation of a corrosion protection system that is field fabricated must be supervised by an independent corrosion expert to ensure proper installation. [Section III.10.E.3.e, DWP]~~

~~**Basis Discussion:** This requirement is derived from the Washington Administrative Code (WAC) Dangerous Waste Regulations at WAC Chapter 173-303, specifically the Tank System regulations in WAC 173-303-640. These regulatory requirements have been incorporated into the Dangerous Waste Permit, WTP- Operating Unit Group 10, WA 7890008967, as permit condition III.10.E.3.e.~~

~~This requirement is not applicable to tank systems with components that are not in contact with soil or water.~~

~~**Verification:** Construction/installation verification is expected to be achieved through the following:~~

~~Verif. Method~~	~~Verif. By~~	~~Plan~~	~~Notes/Comments~~
~~**R**~~	~~**ENV**~~	~~Review completed installation packages to verify the requirements corrosion protection are met.~~	

3.11.11.1.8 Ancillary Equipment

Requirement: LOP-VSL-00001 ancillary equipment shall be supported and protected against physical damage and excessive stress due to settlement, vibration, expansion, or contraction [WAC 173-303-640(3)(f)]. [Section III.10.E.3.d, DWP[WA7890008967_WTP ID#324]]

Basis Discussion: This requirement is derived from the Washington Administrative Code (WAC) Dangerous Waste Regulations at WAC Chapter 173-303, specifically the Tank System regulations in WAC 173-303-640. These regulatory requirements have been incorporated into the Dangerous Waste Permit, WTP- Operating Unit Group 10, WA 7890008967, as permit condition III.10.E.3.d.

Verification: Construction/installation verification is expected to be achieved through the following:

Verif. Method	Verif. By	Plan	Notes/Comments
R/I	ENV	Review completed installation packages and nonconformance reports and construction deficiency reports to confirm the plant was constructed in accordance with the approved designs, plans and specifications. Perform walkdown as necessary to complete verification.	

3.11.11.2 LAW Melter 2 LOP SBS Condensate Vessel (LOP-VSL-00002)

3.11.11.2.1 Vessels Handling and Installation

Requirement: The installation of the LOP-VSL-00002 permitted vessels shall be performed with proper handling procedures to prevent damage to the system during installation. Prior to covering, enclosing, or placing the LOP-VSL-00002 system or component, an independent, qualified installation inspector or an independent, qualified, registered professional engineer, either of whom is trained and experience in the proper installation of tank systems or components, must inspect the system as specified in WAC 173-303-640 (3)(c), WAC 173-303-640 (3)(h)

- Specify and document the handling or installation procedures to protect the integrity of the tank system. The procedures should prevent or detect the following defects:
    - weld breaks (WAC 173-303-640 (3)(c)(i))
    - punctures (WAC 173-303-640 (3)(c)(ii))
    - scrapes of protective coatings (WAC 173-303-640 (3)(c)(iii))
    - cracks (WAC 173-303-640 (3)(c)(iv))
    - corrosion (WAC 173-303-640 (3)(c)(v))
    - other structural damage or inadequate construction or installation (WAC 173-303-640(3)(c)(vi))
- Specify and document the remedies for any handling or installation procedure discrepancies identified before the tank system is covered, enclosed, or placed in use. (WAC 173-303-640(3)(c))

[Section III.10.E.3.a, Chp. 4.0, Section 4.2.5, DWP]

Basis Discussion: This requirement is derived from the Washington Administrative Code (WAC) Dangerous Waste Regulations at WAC Chapter 173-303, specifically the Tank System regulations in WAC 173-303-640.

These regulatory requirements have been incorporated into the Dangerous Waste Permit, WTP- Operating Unit Group 10, WA 7890008967, as permit condition III.10.E.3.a (WAC 173-303-640(3)(c), WAC 173-303-640(3)(h)).

Verification: Construction/installation verification is expected to be achieved through the following:

Verif. Method	Verif. By	Plan	Notes/Comments
R/I	**ENV**	Review completed independent qualified inspector installation packages. Perform walkdown as necessary to complete verification.	

3.11.11.2.2 Vessel System Installation Inspection

Requirement: The independent tank system installation inspection and subsequent written statements will be certified pursuant to Permit Condition III.10.E.1.d., comply with all requirements of WAC 173-303-640(3)(h) and will consider, but not be limited to, the following tank system installation documentation:

- Field installation report with date of installation;
- Approved welding procedures;
- Welder qualifications and certification;
- Hydro-test reports, as applicable, in accordance with the American Society of Mechanical Engineers Boiler and Pressure Vessel Code, Section VIII, Division 1, American Petroleum Institute (API) Standard 620, or Standard 650 as applicable;
- Tester credentials;
- Field inspector credentials;
- Field inspector reports;
- Field waiver reports; and
- Non-compliance reports and corrective action (including field waiver reports) and repair reports.

[Section III.10.E.3.g, DWP]

Basis Discussion: None.

Verification: Construction/installation verification is expected to be achieved through the following:

Verif. Method	Verif. By	Plan	Notes/Comments
R/I	**ENV**	Review completed installation packages for compliance documentation. Perform walkdown as necessary to complete verification.	

3.11.11.2.3 Vapor Collection System

Requirement: The LAW LOP-VSL-00002 tank system is constructed with features that prevent escape of vapors, fumes, or other emissions into the air. [Section III.10.E.9.c.xii, DWP]

Basis Discussion: This requirement is derived from the Washington Administrative Code (WAC) Dangerous Waste Regulations at WAC Chapter 173-303, specifically the Tank System regulations in WAC 173-303-640. These regulatory requirements have been incorporated into the Dangerous Waste Permit, WTP- Operating Unit Group 10, WA 7890008967, as permit condition III.10.E.9.c.xii (WAC 173-303-640(5)(e)).

Verification: Construction/installation verification is expected to be achieved through the following:

Verif. Method	Verif. By	Plan	Notes/Comments
R/I	ENV	Review tank system as-built P&IDs to verify the system has a vapor collection system and has been constructed according to the design. Perform walkdown as necessary to complete verification.	

3.11.11.2.4 Vessel Construction

Requirement: The LOP-VSL-00002 construction and location shall be in accordance with the locations dimensions, capacities, material and appurtenances as shown the DWP permitted design as shown in Table 3-30. [Chp. 04, Table 4E-1, DWP]

Table 3-30 LAW Melter 2 SBS Condensate Vessel

Vessel Number/Location	Description	Material	Total Volume (US Gallons)	Approximate Dimensions Inside Diameter x Height or Length in feed and inches (tangent line/tangent line)
LOP-VSL-00002 L-0124	LAW Melter 2 SBS Condensate Vessel	Hastelloy	9,056	12 ft x 8 ft 2 in.

Basis Discussion: Locations, dimensions, capacities, material and appurtenances are~~is~~ provided in DWP Tables 4E-1.

Verification: Construction/installation verification is expected to be achieved through the following:

Verif. Method	Verif. By	Plan	Notes/Comments
R/I	ENV	Perform a review of the design documentation, construction purchasing, and receipt inspection documentation to verify conformance to the permitted design. Perform walkdown as necessary to complete verification.~~Perform a review of the manufacturers data sheet to verify the material of construction and dimensions.~~	

3.11.11.2.5 Tightness Testing

Requirement: The Permittees must test for tightness for the LOP-VSL-00002 system prior to these components being covered, enclosed, or placed into use. If a tank system is found not to be tight, all repairs necessary to remedy the leak(s) in the system must be performed prior to the tank system being covered, enclosed, or placed in use. [Section III.10.E.3.c, DWP]

Basis Discussion: This requirement is derived from the Washington Administrative Code (WAC) Dangerous Waste Regulations at WAC Chapter 173-303, specifically the Tank System regulations in WAC 173-303-640. These regulatory requirements have been incorporated into the Dangerous Waste Permit, WTP- Operating Unit Group 10, WA 7890008967, as permit condition III.10.E.3.c.

Verification: Construction/installation verification is expected to be achieved through the following:

Verif. Method	Verif. By	Plan	Notes/Comments
R/I	ENV	Review completed installation packages documentation to ensure the tightness testing was completed. Perform walkdown as necessary to complete verification.	

3.11.11.2.6 Melter 2 SBS Condensate Overflow Prevention Controls

Requirement: The melter 2 SBS condensate vessel shall be constructed with the appropriate instrumentation to allow for the control and prevention of overflow from the tank or containment systems. See Table 3-31 for the overflow instruments. [Sections III.10.E.9.e.iv, III.10.H.1.a.xvii, DWP[WA7890008967_WTP ID#358]]

Table 3-31 Melter 2 SBS Condensate Vessel Prevention Controls

Monitoring/Control Parameter	Type of Instrument/ Control Device	Instrument/Control Device Tag Number
Melter 2 SBS Condensate Vessel LOP-VSL-00002	Level Transmitter	LT-2018
	Level Indicators	LI-2018 LI-2018A
	Level Relay	LY-2018
	Level Switch High High	LSHH-2018
	Level Switch Low Low	LSLL-2018
	Level Alarm High High	LAHH-2018
	Level Alarm Low Low	LALL-2018

Basis Discussion: Table 3-29 is developed from 24590-LAW-PER-J-03-003, *System Logic Description for Low-Activity Waste Facility – LAW Primary Offgas Process (LOP) System*. This requirement is derived from the Washington Administrative Code (WAC) Dangerous Waste Regulations at WAC Chapter 173-303, specifically the Tank System regulations in WAC 173-303-640(5)(b). These regulatory requirements have been incorporated into the Dangerous Waste Permit, WTP- Operating Unit Group 10, WA 7890008967, as permit conditions III.10.E.9.e.iv and III.10.H.1.a.xvii.

Verification: Construction/installation verification is expected to be achieved through the following:

Verif. Method	Verif. By	Plan	Notes/Comments
R/I	ENV	Review completed purchasing, installation and inspection documentation to verify instrumentation. Perform walkdown as necessary to complete verification.~~Review the Instrument Data Sheets for the instruments to verify Instruments in Table 3-31.~~	

3.11.11.2.7 ~~Corrosion Protection~~Deleted

~~**Requirement**: The Permittees must provide the type and degree of corrosion protection for LOP-VSL-00002 recommended by an independent corrosion expert, based on the information provided in Operating Unit Group~~

~~10, Appendix 9.9, and 9.11 of this Permit, as approved pursuant to Permit Conditions III.10.E.9.b.i., III.10.E.9.b.iv., III.10.E.9.b.v., III.10.E.9.c.i., III.10.E.9.c.iv., III.10.E.9.c.v., III.10.E.9.d.i., III.10.E.9.d.iv., and III.10.E.9.d.v. or other corrosion protection if the Ecology believes other corrosion protection is necessary to ensure the integrity of the tank system during use of the tank system. The installation of a corrosion protection system that is field fabricated must be supervised by an independent corrosion expert to ensure proper installation. [Section III.10.E.3.e, DWP]~~

~~**Basis Discussion:** This requirement is derived from the Washington Administrative Code (WAC) Dangerous Waste Regulations at WAC Chapter 173-303, specifically the Tank System regulations in WAC 173-303-640. These regulatory requirements have been incorporated into the Dangerous Waste Permit, WTP- Operating Unit Group 10, WA 7890008967, as permit condition III.10.E.3.e.~~

~~This requirement is not applicable to tank systems with components that are not in contact with soil or water.~~

~~**Verification:** Construction/installation verification is expected to be achieved through the following:~~

~~Verif. Method~~	~~Verif. By~~	~~Plan~~	~~Notes/Comments~~
~~R~~	~~ENV~~	~~Review completed installation packages to verify the requirements corrosion protection are met.~~	

3.11.11.2.8 Ancillary Equipment

Requirement: LOP-VSL-00002 ancillary equipment shall be supported and protected against physical damage and excessive stress due to settlement, vibration, expansion, or contraction. (WAC 173-303-640(3)(f)). [Section III.10.E.3.d, DWP[WA7890008967_WTP ID#324]]

Basis Discussion: This requirement is derived from the Washington Administrative Code (WAC) Dangerous Waste Regulations at WAC Chapter 173-303, specifically the Tank System regulations in WAC 173-303-640. These regulatory requirements have been incorporated into the Dangerous Waste Permit, WTP- Operating Unit Group 10, WA 7890008967, as permit condition III.10.E.3.d.

Verification: Construction/installation verification is expected to be achieved through the following:

Verif. Method	Verif. By	Plan	Notes/Comments
R/I	ENV	Review completed installation packages and nonconformance reports and construction deficiency reports to confirm the plant was constructed in accordance with the approved designs, plans and specifications. Perform walkdown as necessary to complete verification.	

3.11.11.3 LVP Caustic Collection Tank (LVP-TK-00001)

3.11.11.3.1 Vessel System Installation Inspection

Requirement: The installation of the LVP-TK-00001 shall be performed with proper handling procedures to prevent damage to the system during installation. Prior to covering, enclosing, or placing the LVP tank system or component, an independent, qualified installation inspector or an independent, qualified, registered professional

engineer, either of whom is trained and experience in the proper installation of tank systems or components, must inspect the system as specified in WAC 173-303-640 (3)(c), WAC 173-303-640 (3)(h)

- Specify and document the handling or installation procedures to protect the integrity of the tank system. The procedures should prevent or detect the following defects:
    - weld breaks (WAC 173-303-640 (3)(c)(i))
    - punctures (WAC 173-303-640 (3)(c)(ii))
    - scrapes of protective coatings (WAC 173-303-640 (3)(c)(iii))
    - cracks (WAC 173-303-640 (3)(c)(iv))
    - corrosion (WAC 173-303-640 (3)(c)(v))
    - other structural damage or inadequate construction or installation (WAC 173-303-640(3)(c)(vi))
- Specify and document the remedies for any handling or installation procedure discrepancies identified before the tank system is covered, enclosed, or placed in use. (WAC 173-303-640(3)(c))

[Section III.10.E.3.a, Chp. 4.0, Section 4.2.5, DWP]

Basis Discussion: This requirement is derived from the Washington Administrative Code (WAC) Dangerous Waste Regulations at WAC Chapter 173-303, specifically the Tank System regulations in WAC 173-303-640. These regulatory requirements have been incorporated into the Dangerous Waste Permit, WTP- Operating Unit Group 10, WA 7890008967, as permit condition III.10.E.3.a (WAC 173-303-640(3)(c), WAC 173-303-640(3)(h)).

Verification: Construction/installation verification is expected to be achieved through the following:

Verif. Method	Verif. By	Plan	Notes/Comments
R/I	**ENV**	Review completed independent qualified inspector installation packages. Perform walkdown as necessary to complete verification.	

3.11.11.3.2 System Installation

Requirement: The independent tank system installation inspection and subsequent written statements will be certified pursuant to Permit Condition III.10.E.1.d., comply with all requirements of WAC 173-303-640(3)(h) and will consider, but not be limited to, the following tank system installation documentation:

- Field installation report with date of installation;
- Approved welding procedures;
- Welder qualifications and certification;
- Hydro-test reports, as applicable, in accordance with the American Society of Mechanical Engineers Boiler and Pressure Vessel Code, Section VIII, Division 1, American Petroleum Institute (API) Standard 620, or Standard 650 as applicable;
- Tester credentials;
- Field inspector credentials;
- Field inspector reports;
- Field waiver reports; and
- Non-compliance reports and corrective action (including field waiver reports) and repair reports.

[Section III.10.E.3.g, DWP]

Basis Discussion: None.

Verification: Construction/installation verification is expected to be achieved through the following:

Verif. Method	Verif. By	Plan	Notes/Comments
R/I	ENV	Review completed installation packages for compliance documentation. Perform walkdown as necessary to complete verification.	

3.11.11.3.3 Vapor Collection System

Requirement: The LVP-TK-00001 tank system is constructed with features that prevent escape of vapors, fumes, or other emissions into the air. [Section III.10.E.9.c.xii, DWP]

Basis Discussion: This requirement is derived from the Washington Administrative Code (WAC) Dangerous Waste Regulations at WAC Chapter 173-303, specifically the Tank System regulations in WAC 173-303-640. These regulatory requirements have been incorporated into the Dangerous Waste Permit, WTP- Operating Unit Group 10, WA 7890008967, as permit condition III.10.E.9.c.xii (WAC 173-303-640(5)(e)).

Verification: Construction/installation verification is expected to be achieved through the following:

Verif. Method	Verif. By	Plan	Notes/Comments
R/I	ENV	Review tank system as-built P&IDs to verify the system has a vapor collection system and has been constructed according to the design. Perform walkdown as necessary to complete verification.	

3.11.11.3.4 Vessel Construction

Requirement: The LVP-TK-00001 construction and location shall be in accordance with the locations dimensions, capacities, material and appurtenances as shown the DWP permitted design as shown in Table 3-32. [Chp. 04, Table 4E-1, DWP]

Table 3-32 LAW Casutic Collection Tank

Vessel Number/Location	Description	Material	Total Volume (US Gallons)	Approximate Dimensions Inside Diameter x Height or Length in feed and inches (tangent line/tangent line)
LVP-TK-00001/ L-0218	LAW Caustic Collection Tank	Stainless Steel	14,232	13 ft. (od) x 14 ft. 4 in.

Basis Discussion: Locations, dimensions, capacities, material and appurtenances are~~is~~ provided in DWP Tables 4E-1.

Verification: Construction/installation verification is expected to be achieved through the following:

Verif. Method	Verif. By	Plan	Notes/Comments
R/I	ENV	Perform a review of the design documentation, construction purchasing, and receipt inspection documentation to verify conformance to the permitted design. Perform walkdown as necessary to complete verification.~~Perform a review of the manufacturers data sheet to verify the material of construction and dimensions.~~	

3.11.11.3.5 Tightness Testing

Requirement: The Permittees must test for tightness for the LVP-TK-00001 system prior to these components being covered, enclosed, or placed into use. If a tank system is found not to be tight, all repairs necessary to remedy the leak(s) in the system must be performed prior to the tank system being covered, enclosed, or placed in use. [Section III.10.E.3.c, DWP]

Basis Discussion: This requirement is derived from the Washington Administrative Code (WAC) Dangerous Waste Regulations at WAC Chapter 173-303, specifically the Tank System regulations in WAC 173-303-640. These regulatory requirements have been incorporated into the Dangerous Waste Permit, WTP- Operating Unit Group 10, WA 7890008967, as permit condition III.10.E.3.c.

Verification: Construction/installation verification is expected to be achieved through the following:

Verif. Method	Verif. By	Plan	Notes/Comments
R/I	ENV	Review completed installation packages documentation to ensure the tightness testing was completed. Perform walkdown as necessary to complete verification.	

3.11.11.3.6 LVP Caustic Collection Tank Overflow Prevention Controls

Requirement: The LVP caustic collection tank shall be constructed with the appropriate instrumentation to allow for the control and prevention of overflow from the tank or containment systems. See Table 3-33 for the overflow instruments. [Sections III.10.E.9.e.iv, III.10.H.1.a.xvii, DWP]

Table 3-33 LVP Caustic Collection Tank Overflow Prevention Controls

Monitoring/Control Parameter	Type of Instrument/ Control Device	Instrument/Control Device Tag Number
LVP Caustic Collection Tank LVP-TK-00001	Level Transmitter	LT-0055
	Level Indicators	LI-0055 LI-0055D
	Level Relay	LY-0055D
	Level Switch High High	LSHH-0055D
	Level Switch Low Low	LSLL-0055D
	Level Alarm High High	LAHH-0055D

	Level Alarm Low Low	LALL-0055D

Basis Discussion: Table 3-33 is developed from 24590-LAW-PER-J-04-0002, *System Logic Description for Low-Activity Waste Facility – LAW Secondary Offgas Process (LVP) System*. This requirement is derived from the Washington Administrative Code (WAC) Dangerous Waste Regulations at WAC Chapter 173-303, specifically the Tank System regulations in WAC 173-303-640(5)(b). These regulatory requirements have been incorporated into the Dangerous Waste Permit, WTP- Operating Unit Group 10, WA 7890008967, as permit conditions III.10.E.9.e.iv and III.10.H.1.a.xvii.

Verification: Construction/installation verification is expected to be achieved through the following:

Verif. Method	Verif. By	Plan	Notes/Comments
R/I	**ENV**	Review completed purchasing, installation and inspection documentation to verify instrumentation. Perform walkdown as necessary to complete verification.~~Review the Instrument Data Sheets for the instruments to verify Instruments in Table 3-33.~~	

3.11.11.3.7 ~~Corrosion Protection~~Deleted

~~**Requirement**: The Permittees must provide the type and degree of corrosion protection for LVP-TK-00001 recommended by an independent corrosion expert, based on the information provided in Operating Unit Group 10, Appendix 11.9, and 11.11 of this Permit, as approved pursuant to Permit Conditions III.10.E.9.b.i., III.10.E.9.b.iv., III.10.E.9.b.v., III.10.E.9.c.i., III.10.E.9.c.iv., III.10.E.9.c.v., III.10.E.9.d.i., III.10.E.9.d.iv., and III.10.E.9.d.v. or other corrosion protection if the Ecology believes other corrosion protection is necessary to ensure the integrity of the tank system during use of the tank system. The installation of a corrosion protection system that is field fabricated must be supervised by an independent corrosion expert to ensure proper installation. [Section III.10.E.3.e, DWP]~~

~~**Basis Discussion:** This requirement is derived from the Washington Administrative Code (WAC) Dangerous Waste Regulations at WAC Chapter 173-303, specifically the Tank System regulations in WAC 173-303-640. These regulatory requirements have been incorporated into the Dangerous Waste Permit, WTP- Operating Unit Group 10, WA 7890008967, as permit condition III.10.E.3.e.~~

~~This requirement is not applicable to tank systems with components that are not in contact with soil or water.~~

~~**Verification:** Construction/installation verification is expected to be achieved through the following:~~

~~Verif. Method~~	~~Verif. By~~	~~Plan~~	~~Notes/Comments~~
~~**R**~~	~~**ENV**~~	~~Review completed installation packages to verify the requirements corrosion protection are met.~~	

3.11.11.3.8 Ancillary Equipment

Requirement: LOP-VSL-00002 ancillary equipment shall be supported and protected against physical damage and excessive stress due to settlement, vibration, expansion, or contraction. (WAC 173-303-640(3)(f)). [Section III.10.E.3.d, DWP[WA7890008967_WTP ID#324]]

Basis Discussion: This requirement is derived from the Washington Administrative Code (WAC) Dangerous Waste Regulations at WAC Chapter 173-303, specifically the Tank System regulations in WAC 173-303-640. These regulatory requirements have been incorporated into the Dangerous Waste Permit, WTP- Operating Unit Group 10, WA 7890008967, as permit condition III.10.E.3.d.

Verification: Construction/installation verification is expected to be achieved through the following:

Verif. Method	Verif. By	Plan	Notes/Comments
R/I	ENV	Review completed installation packages and nonconformance reports and construction deficiency reports to confirm the plant was constructed in accordance with the approved designs, plans and specifications. Perform walkdown as necessary to complete verification.	

3.11.12 LOP/LVP Vaults, Rooms and Secondary Containment

3.11.12.1 Melter 1 Process Cell (L-0123)

3.11.12.1.1 L-0123 Dimensions

Requirement: The room No. L-0123 dimensions shall be as indicated in 24590-LAW-PER-M-02-002, *Flooding Volume for LAW Facility*. [Chp. 4E, Table 4E-3, DWP]

Basis Discussion: The secondary containment for L-0123 is influenced by the geometry and slope of the cell floor. Additionally, the volume of containment is also influenced by the floor size.

Verification: Construction/installation verification is expected to be achieved through the following:

Verif. Method	Verif. By	Plan	Notes/Comments
R/I	ENV	Review the as built general arrangement drawings to verify the dimensions of the cell dimensions. Perform walkdown as necessary to complete verification.	

3.11.12.1.2 Secondary Containment System Integrity

Requirement: The secondary containment for the melter 1 process cell (L-0123), as approved/modified pursuant to Permit Condition III.10.E.9., are free of cracks or gaps to prevent any migration of dangerous and/or mixed waste or accumulated liquid out of the system to the soil, ground water, or surface water at any time that waste is in the tank system [WAC 173-303-320, WAC 173-303-640(4)(b)(i), WAC 173-303-640(4)(e)(i)(C), WAC 173-303-640(6), and WAC 173-303-806(4)(c)(vii)]. [Section III.10.E.5.g, DWP]

Basis Discussion: This requirement is derived from the Washington Administrative Code (WAC) Dangerous Waste Regulations at WAC Chapter 173-303, specifically the Tank System regulations in WAC 173-303-640. These regulatory requirements have been incorporated into the Dangerous Waste Permit, WTP- Operating Unit Group 10, WA 7890008967, as permit condition III.10.E.5.g (WAC 173-303-640(4)(e)(i)(C), WAC 173-303-640(4)(e)(i)(D), WAC 173-303-320, WAC 173-303-640(4)(b)(i), WAC 173-303-640(4)(e)(i)(C), WAC 173-303-640(6), and WAC 173-303-806(4)(c)(vii)).

Verification: Construction/installation verification is expected to be achieved through the following:

Verif. Method	Verif. By	Plan	Notes/Comments
I	**ENV**	Perform a permitted facility and system inspection of the tank system to verify construction and installation is free of cracks or gaps to prevent any migration of dangerous and/or mixed waste.	

3.11.12.1.3 Construction of Secondary Containment

Requirement: The Permittees will construct the secondary containment systems for the melter 1 process cell (L-0123), as approved/modified pursuant to Permit Condition III.10.E.9, as specified in Operating Unit Group 10, Appendices 9.2, 9.4 through 9.14, 9.18 of this Permit, as approved pursuant to Permit Conditions III.10.E.9.b., III.10.E.9.c., and III.10.E.9.d. The secondary containment wall coating height required for this room is 4 ft. [Section III.10.E.2.b, DWP]

Basis Discussion: Important containment features are delineated and described in these appendices with some specifics covered by construction requirements identified in this document.

Verification: Construction/installation verification is expected to be achieved through the following:

Verif. Method	Verif. By	Plan	Notes/Comments
R/I	**ENV~~G~~**	Perform a review of the design documentation, construction purchasing, and receipt inspection documentation to verify conformance to the permitted design. Perform walkdown as necessary to complete verification.~~Review as-built drawings of the drawings and specification listed in the requirement.~~	

3.11.12.1.4 Leak Detection

Requirement: The Permittees will install and test all process and leak detection system monitors/instrumentation as specified in Permit Tables III.10.H.C and III.10.H.F, as approved/modified pursuant to Permit Condition III.10.H.5, in accordance with Operating Unit Group 10, Appendices 9.1, 9.2, and 9.14 of this Permit, as approved pursuant to Permit Conditions III.10.H.5.d.x. and III.10.H.5.f.xvi. [Section III.10.H.1.a.xiv, III.10.I.1.a.viii, DWP]

Basis Discussion: This requirement is derived from the Washington Administrative Code (WAC) Dangerous Waste Regulations at WAC Chapter 173-303, specifically the Tank System Regulations in WAC 173-303-640. These regulatory requirements have been incorporated into the Dangerous Waste Permit, WTP – Operating Unit Group 10, WA 78900089, as permit conditions III.10.H.1.a.xiv and III.10.I.1.a.viii.

Verification: Construction/installation verification is expected to be achieved through the following:

Verif. Method	Verif. By	Plan	Notes/Comments
R/I	**ENV~~G~~**	Perform a review of the design documentation, construction purchasing, and receipt inspection documentation to verify conformance to the permitted design. Perform walkdown as necessary to complete	

Verif. Method	Verif. By	Plan	Notes/Comments
		verification.~~Review the Instrument Data Sheets for the instruments to verify the criteria in Table 3.2.~~	

3.11.12.1.5 Secondary Containment

Requirement: The Permittees will ensure that the secondary containment systems for the LAW Vitrification System sub-systems listed in Permit Tables III.10.H.A and III.10.H.B, as approved/modified pursuant to Permit Condition III.10.H.5, are free of cracks or gaps to prevent any migration of dangerous and/or mixed waste or accumulated liquid out of the system to the soil, groundwater, or surface water at any time during use of the LAW Vitrification System sub-systems. Any indication that a crack or gap may exist in the containment systems will be investigated and repaired in accordance with Operating Unit Group 10, Appendix 9.18 of this Permit, as approved pursuant to Permit Condition III.10.H.5.e.v [WAC 173-303–640(4)(b)(i), WAC 173-303–640(4)(e)(i)(C), and WAC 173-303-640(6), in accordance with WAC 173-303-680(2) and (3), WAC 173-303-806(4)(i)(i)(B), and WAC 173-303-320]. [Section III.10.H.1.a.xx, III.10.I.1.a.xiv, DWP]

Basis Discussion: This requirement is derived from the Washington Administrative Code (WAC) Dangerous Waste Regulations at WAC Chapter 173-303, specifically the Tank System regulations in WAC 173-303-640. These regulatory requirements have been incorporated into the Dangerous Waste Permit, WTP- Operating Unit Group 10, WA 7890008967, as permit conditions III.10.H.1.a.xx and III.10.I.1.a.xiv.

Verification: Construction/installation verification is expected to be achieved through the following:

Verif. Method	Verif. By	Plan	Notes/Comments
I	**ENV**	Perform a permitted facility and system inspection of the tank system to verify construction and installation is free of cracks or gaps to prevent any migration of dangerous and/or mixed waste.	

3.11.12.1.6 Impermeable Coating

Requirement: An impermeable coating, as specified in Operating Unit Group 10, Appendices 9.4, 9.5, 9.7, 9.9, 9.11, and 9.12 of this Permit, as approved pursuant to Permit Condition III.10.H.5.b.v. will be maintained for all concrete containment systems and concrete portions of containment systems for each LAW Vitrification System sub-systems listed in Permit Tables III.10.H.A and III.10.H.B, as approved/modified pursuant to Permit Condition III.10.H.5 (concrete containment systems that do not have a liner, pursuant to WAC 173-303-640(4)(e)(i), in accordance with WAC 173-303-680(2), and have construction joints, will meet the requirements of WAC 173-303-640(4)(e)(ii)(C), in accordance with WAC 173-303-680(2). The coating will prevent migration of any dangerous and mixed waste into the concrete. All coatings will meet the following performance standards:

- The coating must seal the containment surface such that no cracks, seams, or other avenues through which liquid could migrate are present;
- The coating must be of adequate thickness and strength to withstand the normal operation of equipment and personnel within the given area such that degradation or physical damage to the coating or lining can be identified and remedied before dangerous and mixed waste could migrate from the system; and
- The coating must be compatible with the dangerous and mixed waste, treatment reagents, or other materials managed in the containment system [WAC 173-303-640(4)(e)(ii)(D), in accordance with WAC 173-303-680(2) and (3), and WAC 173-303-806(4)(i)(i)(A)].

[Section III.10.I.1.a.xvi, DWP]

Basis Discussion: This requirement is derived from the Washington Administrative Code (WAC) Dangerous Waste Regulations at WAC Chapter 173-303, specifically the Tank System regulations in WAC 173-303-640. These regulatory requirements have been incorporated into the Dangerous Waste Permit, WTP- Operating Unit Group 10, WA 7890008967, as permit condition III.10.I.1.a.xvi.

Verification: Construction/installation verification is expected to be achieved through the following:

Verif. Method	Verif. By	Plan	Notes/Comments
R/I	~~CON~~ENV	Review the construction documentation to verify the impermeable coating have been installed. Perform walkdown as necessary to complete verification.	
~~I~~	~~ENV~~	~~Perform a permitted facility and system inspection of tank system to verify construction and installation is in compliance with the permitted design.~~	

3.11.12.2 Melter 2 Process Cell (L-0124)

3.11.12.2.1 L-0124 Dimensions

Requirement: The room No. L-0124 dimensions shall be as indicated in 24590-LAW-PER-M-02-002, *Flooding Volume for LAW Facility*. [Chp. 4E, Table 4E-3, DWP]

Basis Discussion: The secondary containment for L-0124 is influenced by the geometry and slope of the cell floor. Additionally, the volume of containment is also influenced by the floor size.

Verification: Construction/installation verification is expected to be achieved through the following:

Verif. Method	Verif. By	Plan	Notes/Comments
R/I	ENV	Review the as built general arrangement drawings to verify the dimensions of the cell dimensions. Perform walkdown as necessary to complete verification.	

3.11.12.2.2 Secondary Containment System Integrity

Requirement: The secondary containment for the melter 2 process cell (L-0124), as approved/modified pursuant to Permit Condition III.10.E.9., are free of cracks or gaps to prevent any migration of dangerous and/or mixed waste or accumulated liquid out of the system to the soil, ground water, or surface water at any time that waste is in the tank system [WAC 173-303-320, WAC 173-303-640(4)(b)(i), WAC 173-303-640(4)(e)(i)(C), WAC 173-303-640(6), and WAC 173-303-806(4)(c)(vii)]. [Section III.10.E.5.g, DWP]

Basis Discussion: This requirement is derived from the Washington Administrative Code (WAC) Dangerous Waste Regulations at WAC Chapter 173-303, specifically the Tank System regulations in WAC 173-303-640. These regulatory requirements have been incorporated into the Dangerous Waste Permit, WTP- Operating Unit Group 10, WA 7890008967, as permit condition III.10.E.5.g (WAC 173-303-640(4)(e)(i)(C), WAC 173-303-640(4)(e)(i)(D), WAC 173-303-320, WAC 173-303-640(4)(b)(i), WAC 173-303-640(4)(e)(i)(C), WAC 173-303-640(6), and WAC 173-303-806(4)(c)(vii)).

Verification: Construction/installation verification is expected to be achieved through the following:

Verif. Method	Verif. By	Plan	Notes/Comments
I	**ENV**	Perform a permitted facility and system inspection of the tank system to verify construction and installation is free of cracks or gaps to prevent any migration of dangerous and/or mixed waste.	

3.11.12.2.3 Construction of Secondary Containment

Requirement: The Permittees will construct the secondary containment systems for the melter 2 process cell (L-0124), as approved/modified pursuant to Permit Condition III.10.E.9, as specified in Operating Unit Group 10, Appendices 9.2, 9.4 through 9.14, 9.18 of this Permit, as approved pursuant to Permit Conditions III.10.E.9.b., III.10.E.9.c., and III.10.E.9.d. The secondary containment wall coating height required for this room is 4 ft. [Section III.10.E.2b, DWP]

Basis Discussion: Important containment features are delineated and described in these appendices with some specifics covered by construction requirements identified in this document.

Verification: Construction/installation verification is expected to be achieved through the following:

Verif. Method	Verif. By	Plan	Notes/Comments
R/I	**ENV~~G~~**	Perform a review of the design documentation, construction purchasing, and receipt inspection documentation to verify conformance to the permitted design. Perform walkdown as necessary to complete verification.~~Review as-built drawings of the drawings and specification listed in the requirement.~~	

3.11.12.2.4 Leak Detection

Requirement: The Permittees will install and test all process and leak detection system monitors/instrumentation as specified in Permit Tables III.10.H.C and III.10.H.F, as approved/modified pursuant to Permit Condition III.10.H.5, in accordance with Operating Unit Group 10, Appendices 9.1, 9.2, and 9.14 of this Permit, as approved pursuant to Permit Conditions III.10.H.5.d.x. and III.10.H.5.f.xvi. [Section III.10.H.1.a.xiv, III.10.I.1.a.viii, DWP]

Basis Discussion: This requirement is derived from the Washington Administrative Code (WAC) Dangerous Waste Regulations at WAC Chapter 173-303, specifically the Tank System Regulations in WAC 173-303-640. These regulatory requirements have been incorporated into the Dangerous Waste Permit, WTP – Operating Unit Group 10, WA 78900089, as permit condition III.10.H.1.a.xiv.

Verification: Construction/installation verification is expected to be achieved through the following:

Verif. Method	Verif. By	Plan	Notes/Comments
R/I	**EN~~G~~V**	Perform a review of the design documentation, construction purchasing, and receipt inspection documentation to verify conformance to the permitted design. Perform walkdown as necessary to complete	

Verif. Method	Verif. By	Plan	Notes/Comments
		verification.~~Review the Instrument Data Sheets for the instruments to verify the construction criteria.~~	

3.11.12.2.5 Secondary Containment

Requirement: The Permittees will ensure that the secondary containment systems for the LAW Vitrification System sub-systems listed in Permit Tables III.10.H.A and III.10.H.B, as approved/modified pursuant to Permit Condition III.10.H.5, are free of cracks or gaps to prevent any migration of dangerous and/or mixed waste or accumulated liquid out of the system to the soil, groundwater, or surface water at any time during use of the LAW Vitrification System sub-systems. Any indication that a crack or gap may exist in the containment systems will be investigated and repaired in accordance with Operating Unit Group 10, Appendix 9.18 of this Permit, as approved pursuant to Permit Condition III.10.H.5.e.v [WAC 173-303–640(4)(b)(i), WAC 173-303–640(4)(e)(i)(C), and WAC 173-303-640(6), in accordance with WAC 173-303-680(2) and (3), WAC 173-303-806(4)(i)(i)(B), and WAC 173-303-320]. [Section III.10.H.1.a.xx, III.10.I.1.a.xiv, DWP]

Basis Discussion: This requirement is derived from the Washington Administrative Code (WAC) Dangerous Waste Regulations at WAC Chapter 173-303, specifically the Tank System regulations in WAC 173-303-640. These regulatory requirements have been incorporated into the Dangerous Waste Permit, WTP- Operating Unit Group 10, WA 7890008967, as permit conditions III.10.H.1.a.xx and III.10.I.1.a.xiv.

Verification: Construction/installation verification is expected to be achieved through the following:

Verif. Method	Verif. By	Plan	Notes/Comments
I	**ENV**	Perform a permitted facility and system inspection of the tank system to verify construction and installation is free of cracks or gaps to prevent any migration of dangerous and/or mixed waste.	

3.11.12.2.6 Impermeable Coating

Requirement: An impermeable coating, as specified in Operating Unit Group 10, Appendices 9.4, 9.5, 9.7, 9.9, 9.11, and 9.12 of this Permit, as approved pursuant to Permit Condition III.10.H.5.b.v. will be maintained for all concrete containment systems and concrete portions of containment systems for each LAW Vitrification System sub-systems listed in Permit Tables III.10.H.A and III.10.H.B, as approved/modified pursuant to Permit Condition III.10.H.5 (concrete containment systems that do not have a liner, pursuant to WAC 173-303-640(4)(e)(i), in accordance with WAC 173-303-680(2), and have construction joints, will meet the requirements of WAC 173-303-640(4)(e)(ii)(C), in accordance with WAC 173-303-680(2). The coating will prevent migration of any dangerous and mixed waste into the concrete. All coatings will meet the following performance standards:

- The coating must seal the containment surface such that no cracks, seams, or other avenues through which liquid could migrate are present;
- The coating must be of adequate thickness and strength to withstand the normal operation of equipment and personnel within the given area such that degradation or physical damage to the coating or lining can be identified and remedied before dangerous and mixed waste could migrate from the system; and
- The coating must be compatible with the dangerous and mixed waste, treatment reagents, or other materials managed in the containment system [WAC 173-303-640(4)(e)(ii)(D), in accordance with WAC 173-303-680(2) and (3), and WAC 173-303-806(4)(i)(i)(A)].

[Section III.10.I.1.a.xvi, DWP]

Basis Discussion: This requirement is derived from the Washington Administrative Code (WAC) Dangerous Waste Regulations at WAC Chapter 173-303, specifically the Tank System regulations in WAC 173-303-640. These regulatory requirements have been incorporated into the Dangerous Waste Permit, WTP- Operating Unit Group 10, WA 7890008967, as permit condition III.10.I.1.a.xvi.

Verification: Construction/installation verification is expected to be achieved through the following:

Verif. Method	Verif. By	Plan	Notes/Comments
R/I	~~CON~~ENV	Review the construction documentation to verify the impermeable coating have been installed. Perform walkdown as necessary to complete verification.	
~~I~~	~~ENV~~	~~Perform a permitted facility and system inspection of tank system to verify construction and installation is in compliance with the permitted design.~~	

3.11.12.3 Caustic Scrubber Blowdown Collection Berm (L-0218)

3.11.12.3.1 L-0218 Berm Dimensions

Requirement: The caustic scrubber blowdown collection berm in room No. L-0218 dimensions shall be as indicated in 24590-LAW-PER-M-02-002, *Flooding Volume for LAW Facility*. [Chp. 4E, Table 4E-3, DWP]

Basis Discussion: The secondary containment for L-0218 berm is influenced by the geometry and slope of the cell floor. Additionally, the volume of containment is also influenced by the floor size.

Verification: Construction/installation verification is expected to be achieved through the following:

Verif. Method	Verif. By	Plan	Notes/Comments
R/I	ENV	Review the as built general arrangement drawings to verify the dimensions of the cell dimensions. Perform walkdown as necessary to complete verification.	

3.11.12.3.2 Secondary Containment System Integrity

Requirement: The secondary containment for the caustic scrubber system, as approved/modified pursuant to Permit Condition III.10.E.9., are free of cracks or gaps to prevent any migration of dangerous and/or mixed waste or accumulated liquid out of the system to the soil, ground water, or surface water at any time that waste is in the tank system [WAC 173-303-320, WAC 173-303-640(4)(b)(i), WAC 173-303-640(4)(e)(i)(C), WAC 173-303-640(6), and WAC 173-303-806(4)(c)(vii)]. [Section III.10.E.5.g, DWP]

Basis Discussion: This requirement is derived from the Washington Administrative Code (WAC) Dangerous Waste Regulations at WAC Chapter 173-303, specifically the Tank System regulations in WAC 173-303-640. These regulatory requirements have been incorporated into the Dangerous Waste Permit, WTP- Operating Unit Group 10, WA 7890008967, as permit condition III.10.E.5.g (WAC 173-303-640(4)(e)(i)(C), WAC 173-303-640(4)(e)(i)(D), WAC 173-303-320, WAC 173-303-640(4)(b)(i), WAC 173-303-640(4)(e)(i)(C), WAC 173-303-640(6), and WAC 173-303-806(4)(c)(vii)).

Verification: Construction/installation verification is expected to be achieved through the following:

Verif. Method	Verif. By	Plan	Notes/Comments
I	**ENV**	Perform a permitted facility and system inspection of the tank system to verify construction and installation is free of cracks or gaps to prevent any migration of dangerous and/or mixed waste.	

3.11.12.3.3 Construction of Secondary Containment

Requirement: The Permittees will construct the secondary containment systems for the caustic scrubber system (L-0218 berm), as approved/modified pursuant to Permit Condition III.10.E.9., as specified in Operating Unit Group 10, Appendices 9.2, 9.4 through 9.14, 9.18 of this Permit, as approved pursuant to Permit Conditions III.10.E.9.b., III.10.E.9.c., and III.10.E.9.d. [Section III.10.E.2b, DWP]

Basis Discussion: Important containment features are delineated and described in these appendices with some specifics covered by construction requirements identified in this document.

Verification: Construction/installation verification is expected to be achieved through the following:

Verif. Method	Verif. By	Plan	Notes/Comments
R/I	**EN~~G~~V**	Perform a review of the design documentation, construction purchasing, and receipt inspection documentation to verify conformance to the permitted design. Perform walkdown as necessary to complete verification.~~Review as-built drawings of the drawings and specification listed in the requirement.~~	

3.11.12.3.4 Leak Detection

Requirement: The Permittees will install and test all process and leak detection system monitors/instrumentation as specified in Permit Tables III.10.H.C and III.10.H.F, as approved/modified pursuant to Permit Condition III.10.H.5, in accordance with Operating Unit Group 10, Appendices 9.1, 9.2, and 9.14 of this Permit, as approved pursuant to Permit Conditions III.10.H.5.d.x. and III.10.H.5.f.xvi. [Section III.10.H.1.a.xiv, III.10.I.1.a.viii, DWP]

Basis Discussion: This requirement is derived from the Washington Administrative Code (WAC) Dangerous Waste Regulations at WAC Chapter 173-303, specifically the Tank System Regulations in WAC 173-303-640. These regulatory requirements have been incorporated into the Dangerous Waste Permit, WTP – Operating Unit Group 10, WA 78900089, as permit conditions III.10.H.1.a.xiv and III.10.I.1.a.viii.

Verification: Construction/installation verification is expected to be achieved through the following:

Verif. Method	Verif. By	Plan	Notes/Comments
R/I	**EN~~G~~V**	Perform a review of the design documentation, construction purchasing, and receipt inspection documentation to verify conformance to the permitted design. Perform walkdown as necessary to complete	

Verif. Method	Verif. By	Plan	Notes/Comments
		verification.~~Review the Instrument Data Sheets for the instruments to verify the construction criteria.~~	

3.11.12.3.5 Secondary Containment

Requirement: The Permittees will ensure that the secondary containment systems for the LAW Vitrification System sub-systems listed in Permit Tables III.10.H.A and III.10.H.B, as approved/modified pursuant to Permit Condition III.10.H.5, are free of cracks or gaps to prevent any migration of dangerous and/or mixed waste or accumulated liquid out of the system to the soil, groundwater, or surface water at any time during use of the LAW Vitrification System sub-systems. Any indication that a crack or gap may exist in the containment systems will be investigated and repaired in accordance with Operating Unit Group 10, Appendix 9.18 of this Permit, as approved pursuant to Permit Condition III.10.H.5.e.v [WAC 173-303–640(4)(b)(i), WAC 173-303–640(4)(e)(i)(C), and WAC 173-303-640(6), in accordance with WAC 173-303-680(2) and (3), WAC 173-303-806(4)(i)(i)(B), and WAC 173-303-320]. [Section III.10.H.1.a.xx, III.10.I.1.a.xiv, DWP]

Basis Discussion: This requirement is derived from the Washington Administrative Code (WAC) Dangerous Waste Regulations at WAC Chapter 173-303, specifically the Tank System regulations in WAC 173-303-640. These regulatory requirements have been incorporated into the Dangerous Waste Permit, WTP- Operating Unit Group 10, WA 7890008967, as permit condition III.10.H.1.a.xx.

Verification: Construction/installation verification is expected to be achieved through the following:

Verif. Method	Verif. By	Plan	Notes/Comments
I	**ENV**	Perform a permitted facility and system inspection of the tank system to verify construction and installation is free of cracks or gaps to prevent any migration of dangerous and/or mixed waste.	

3.11.12.3.6 Impermeable Coating

Requirement: An impermeable coating, as specified in Operating Unit Group 10, Appendices 9.4, 9.5, 9.7, 9.9, 9.11, and 9.12 of this Permit, as approved pursuant to Permit Condition III.10.H.5.b.v. will be maintained for all concrete containment systems and concrete portions of containment systems for each LAW Vitrification System sub-systems listed in Permit Tables III.10.H.A and III.10.H.B, as approved/modified pursuant to Permit Condition III.10.H.5 (concrete containment systems that do not have a liner, pursuant to WAC 173-303-640(4)(e)(i), in accordance with WAC 173-303-680(2), and have construction joints, will meet the requirements of WAC 173-303-640(4)(e)(ii)(C), in accordance with WAC 173-303-680(2). The coating will prevent migration of any dangerous and mixed waste into the concrete. All coatings will meet the following performance standards:

- The coating must seal the containment surface such that no cracks, seams, or other avenues through which liquid could migrate are present;
- The coating must be of adequate thickness and strength to withstand the normal operation of equipment and personnel within the given area such that degradation or physical damage to the coating or lining can be identified and remedied before dangerous and mixed waste could migrate from the system; and
- The coating must be compatible with the dangerous and mixed waste, treatment reagents, or other materials managed in the containment system [WAC 173-303-640(4)(e)(ii)(D), in accordance with WAC 173-303-680(2) and (3), and WAC 173-303-806(4)(i)(i)(A)].

[Section III.10.I.1.a.xvi, DWP]

Basis Discussion: This requirement is derived from the Washington Administrative Code (WAC) Dangerous Waste Regulations at WAC Chapter 173-303, specifically the Tank System regulations in WAC 173-303-640. These regulatory requirements have been incorporated into the Dangerous Waste Permit, WTP- Operating Unit Group 10, WA 7890008967, as permit condition III.10.I.1.a.xvi.

Verification: Construction/installation verification is expected to be achieved through the following:

Verif. Method	Verif. By	Plan	Notes/Comments
R/I	~~CON~~ENV	Review the construction documentation to verify the impermeable coating have been installed. Perform walkdown as necessary to complete verification.	
~~I~~	~~ENV~~	~~Perform a permitted facility and system inspection of tank system to verify construction and installation is in compliance with the permitted design.~~	

3.11.12.4 Caustic Scrubber Curb Area (L-0304F curbed section only)

3.11.12.4.1 L-0304F Dimensions

Requirement: The caustic scrubber curb area in room No. L-0304F dimensions shall be as indicated in 24590-LAW-PER-M-02-002, *Flooding Volume for LAW Facility*. [Chp. 4E, Table 4E-3, DWP]

Basis Discussion: The secondary containment for L-0304 is influenced by the geometry and slope of the cell floor. Additionally, the volume of containment is also influenced by the floor size.

Verification: Construction/installation verification is expected to be achieved through the following:

Verif. Method	Verif. By	Plan	Notes/Comments
R/I	ENV	Review the as built general arrangement drawings to verify the dimensions of the cell dimensions. Perform walkdown as necessary to complete verification.	

3.11.12.4.2 Secondary Containment System Integrity

Requirement: The secondary containment for the caustic scrubber system, as approved/modified pursuant to Permit Condition III.10.E.9., are free of cracks or gaps to prevent any migration of dangerous and/or mixed waste or accumulated liquid out of the system to the soil, ground water, or surface water at any time that waste is in the tank system [WAC 173-303-320, WAC 173-303-640(4)(b)(i), WAC 173-303-640(4)(e)(i)(C), WAC 173-303-640(6), and WAC 173-303-806(4)(c)(vii)]. [Section III.10.E.5.g, DWP]

Basis Discussion This requirement is derived from the Washington Administrative Code (WAC) Dangerous Waste Regulations at WAC Chapter 173-303, specifically the Tank System regulations in WAC 173-303-640. These regulatory requirements have been incorporated into the Dangerous Waste Permit, WTP- Operating Unit Group 10, WA 7890008967, as permit condition III.10.E.5.g (WAC 173-303-640(4)(e)(i)(C), WAC 173-303-640(4)(e)(i)(D), WAC 173-303-320, WAC 173-303-640(4)(b)(i), WAC 173-303-640(4)(e)(i)(C), WAC 173-303-640(6), and WAC 173-303-806(4)(c)(vii)).

Verification: Construction/installation verification is expected to be achieved through the following:

Verif. Method	Verif. By	Plan	Notes/Comments
I	**ENV**	Perform a permitted facility and system inspection of the tank system to verify construction and installation is free of cracks or gaps to prevent any migration of dangerous and/or mixed waste.	

3.11.12.4.3 Construction of Secondary Containment

Requirement: The Permittees will construct the secondary containment systems for the caustic scrubber system (L-0304F curb), as approved/modified pursuant to Permit Condition III.10.E.9., as specified in Operating Unit Group 10, Appendices 9.2, 9.4 through 9.14, 9.18 of this Permit, as approved pursuant to Permit Conditions III.10.E.9.b., III.10.E.9.c., and III.10.E.9.d. [Section III.10.E.2.b, DWP]

Basis Discussion: Important containment features are delineated and described in these appendices with some specifics covered by construction requirements identified in this document.

Verification: Construction/installation verification is expected to be achieved through the following:

Verif. Method	Verif. By	Plan	Notes/Comments
R/I	**EN~~G~~V**	Perform a review of the design documentation, construction purchasing, and receipt inspection documentation to verify conformance to the permitted design. Perform walkdown as necessary to complete verification.~~Review as-built drawings of the drawings and specification listed in the requirement.~~	

3.11.12.4.4 Leak Detection

Requirement: The Permittees will install and test all process and leak detection system monitors/instrumentation as specified in Permit Tables III.10.H.C and III.10.H.F, as approved/modified pursuant to Permit Condition III.10.H.5, in accordance with Operating Unit Group 10, Appendices 9.1, 9.2, and 9.14 of this Permit, as approved pursuant to Permit Condition III.10.H.5.d.x. and III.10.H.5.f.xvi. [Sections III.10.H.1.a.xiv, III.10.I.1.a.viii, DWP]

Basis Discussion: This requirement is derived from the Washington Administrative Code (WAC) Dangerous Waste Regulations at WAC Chapter 173-303, specifically the Tank System Regulations in WAC 173-303-640. These regulatory requirements have been incorporated into the Dangerous Waste Permit, WTP – Operating Unit Group 10, WA 78900089, as permit conditions III.10.H.1.a.xiv and III.10.I.1.a.viii.

Verification: Construction/installation verification is expected to be achieved through the following:

Verif. Method	Verif. By	Plan	Notes/Comments
R/I	**EN~~G~~V**	Perform a review of the design documentation, construction purchasing, and receipt inspection documentation to verify conformance to the permitted design. Perform walkdown as necessary to complete	

Verif. Method	Verif. By	Plan	Notes/Comments
		verification.~~Review the Instrument Data Sheets for the instruments to verify the construction criteria.~~	

3.11.12.4.5 Secondary Containment

Requirement: The Permittees will ensure that the secondary containment systems for the LAW Vitrification System sub-systems listed in Permit Tables III.10.H.A and III.10.H.B, as approved/modified pursuant to Permit Condition III.10.H.5, are free of cracks or gaps to prevent any migration of dangerous and/or mixed waste or accumulated liquid out of the system to the soil, groundwater, or surface water at any time during use of the LAW Vitrification System sub-systems. Any indication that a crack or gap may exist in the containment systems will be investigated and repaired in accordance with Operating Unit Group 10, Appendix 9.18 of this Permit, as approved pursuant to Permit Condition III.10.H.5.e.v [WAC 173-303–640(4)(b)(i), WAC 173-303–640(4)(e)(i)(C), and WAC 173-303-640(6), in accordance with WAC 173-303-680(2) and (3), WAC 173-303-806(4)(i)(i)(B), and WAC 173-303-320]. [Section III.10.H.1.a.xx, III.10.I.1.a.xiv, DWP]

Basis Discussion: This requirement is derived from the Washington Administrative Code (WAC) Dangerous Waste Regulations at WAC Chapter 173-303, specifically the Tank System regulations in WAC 173-303-640. These regulatory requirements have been incorporated into the Dangerous Waste Permit, WTP- Operating Unit Group 10, WA 7890008967, as permit conditions III.10.H.1.a.xx and III.10.I.1.a.xiv.

Verification: Construction/installation verification is expected to be achieved through the following:

Verif. Method	Verif. By	Plan	Notes/Comments
I	**ENV**	Perform a permitted facility and system inspection of the tank system to verify construction and installation is free of cracks or gaps to prevent any migration of dangerous and/or mixed waste.	

3.11.12.4.6 Impermeable Coating

Requirement: An impermeable coating, as specified in Operating Unit Group 10, Appendices 9.4, 9.5, 9.7, 9.9, 9.11, and 9.12 of this Permit, as approved pursuant to Permit Condition III.10.H.5.b.v. will be maintained for all concrete containment systems and concrete portions of containment systems for each LAW Vitrification System sub-systems listed in Permit Tables III.10.H.A and III.10.H.B, as approved/modified pursuant to Permit Condition III.10.H.5 (concrete containment systems that do not have a liner, pursuant to WAC 173-303-640(4)(e)(i), in accordance with WAC 173-303-680(2), and have construction joints, will meet the requirements of WAC 173-303-640(4)(e)(ii)(C), in accordance with WAC 173-303-680(2). The coating will prevent migration of any dangerous and mixed waste into the concrete. All coatings will meet the following performance standards:

- The coating must seal the containment surface such that no cracks, seams, or other avenues through which liquid could migrate are present;
- The coating must be of adequate thickness and strength to withstand the normal operation of equipment and personnel within the given area such that degradation or physical damage to the coating or lining can be identified and remedied before dangerous and mixed waste could migrate from the system; and
- The coating must be compatible with the dangerous and mixed waste, treatment reagents, or other materials managed in the containment system [WAC 173-303-640(4)(e)(ii)(D), in accordance with WAC 173-303-680(2) and (3), and WAC 173-303-806(4)(i)(i)(A)].

[Section III.10.I.1.a.xvi, DWP]

Basis Discussion: This requirement is derived from the Washington Administrative Code (WAC) Dangerous Waste Regulations at WAC Chapter 173-303, specifically the Tank System regulations in WAC 173-303-640. These regulatory requirements have been incorporated into the Dangerous Waste Permit, WTP- Operating Unit Group 10, WA 7890008967, as permit condition III.10.I.1.a.xvi.

Verification: Construction/installation verification is expected to be achieved through the following:

Verif. Method	Verif. By	Plan	Notes/Comments
R/I	~~CON~~ENV	Review the construction documentation to verify the impermeable coating have been installed. Perform walkdown as necessary to complete verification.	
~~I~~	~~ENV~~	~~Perform a permitted facility and system inspection of tank system to verify construction and installation is in compliance with the permitted design.~~	

3.11.12.4.7 Secondary Containment Seal Penetrations (L-0304F)

Requirement: The seal penetrations listed in Table 3-34, for room L-0304F shall be installed to prevent any migration ~~fo~~ of wastes or accumulated liquid out of~~fo~~ the system to the soil, groundwater, or suface water at any time during the use of the tank system. [Sections III.10.E.5.g, III.10.H.1.a.xx, III.10.H.1.a.xiv, III.10.J.1.a.xx, Table III.10.H.G, DWP]

Table 3-34 Seal Penetration for Room L-0304F

Row Number	Room Number	Orientation	Discipline	Sequence Number
58	L-0304F	F	PD	03278
59	L-0304F	F	PD	03277

Basis Discussion: This requirement is derived from the Washington Administrative Code (WAC) Dangerous Waste Regulations at WAC Chapter 173-303, specifically the Tank System regulations in WAC 173-303-640. These regulatory requirements have been incorporated into the Dangerous Waste Permit, WTP- Operating Unit Group 10, WA 7890008967.

Verification: Construction/installation verification is expected to be achieved through the following:

Verif. Method	Verif. By	Plan	Notes/Comments
R/I	ENV	Review completed independent qualified inspector installation packages. Perform walkdown as necessary to complete verification.	

3.11.13 LOP Bulges

3.11.13.1 LOP Bulges and Floor Drains Construction

Requirement: The Permittees will construct the LOP bulges listed in Permit Tables III.10.H.B. (see Table 3-35 and Table 3-36), as approved/modified pursuant to Permit Condition III.10.H.5, as specified in Permit Condition

III.10.H.1 and Operating Unit Group 10, Chapter 4 of this Permit, and Operating Unit Group 10, Appendices 9.1 through 9.15 and 9.17 of this Permit, as approved pursuant to Permit Conditions III.10.H.5.a. through d., and III.10.H.5.f. [Sections III.10.H.1.a.i, III.10.H.1.a.ii, III.10.I.1.a.i, III.10.I.1.a.ii, Table III.10.E.L, Chp. 4E, Tables 4E-3 and 4E-4, DWP]

Table 3-35 LOP Bulge Secondary Containment

Room/Area	Approximate Room/Area Dimensions (LxW feet)	Miscellaneous Treatment Units or Tanks in Room/Area (Largest Plant Item)	Volume Largest Plant Item in Room/Area (US Gallons)	Minimum Secondary Containment Height (feet)
LOP-BULGE-00001/L-0202 LOP-BULGE-00002/L-0202	Secondary containment for ancillary equipment, no minimum liner height required.			

Table 3-36 LOP Bulges Sump/Floor Drain Dimensions, Construction and Design Documents

Sump/Leak Detection Box or Floor Drain/Line I.D.#, Room and Elevation	Sump/Leak Detection Box or floor Drain/Line Dimensions (approximate) and Materials of Construction
LOP-FD-00001 Floor Drain/L-0123 (LOP-BULGE-00001 Drain, El. 3 ft.)	2" Dia., 6% Molybdenum
LOP-FD-00002 Floor Drain/L-0124 (LOP-BULGE-00002 Drain, El. 3)	2" Dia., 6% Molybdenum

Basis Discussion: Important containment features are delineated and described in these appendices with some specifics covered by construction requirements identified in this document.

Verification: Construction/installation verification is expected to be achieved through the following:

Verif. Method	Verif. By	Plan	Notes/Comments
R/I	ENV~~G~~	Perform a review of the design documentation, construction purchasing, and receipt inspection documentation to verify conformance to the permitted design. Perform walkdown as necessary to complete verification.~~Review as-built drawings of the drawings and specification listed in the requirement.~~	
~~I~~	~~ENV~~	~~Perform a permitted facility and system inspection of DMWU system to verify construction and installation is in compliance with the permitted design.~~	

3.11.13.2 Support and Protection

Requirement: The Permittees must ensure the LOP bulges are supported and protected against physical damage and excessive stress due to settlement, vibration, expansion, or contraction [WAC 173-303-640(3)(f), in accordance with WAC 173-303-680(2) and (3)]. [Section III.10.H.1.a.vii, DWP]

Basis Discussion: This requirement is derived from the Washington Administrative Code (WAC) Dangerous Waste Regulations at WAC Chapter 173-303, specifically the Tank System regulations in WAC 173-303-640. These regulatory requirements have been incorporated into the Dangerous Waste Permit, WTP- Operating Unit Group 10, WA 7890008967, as permit condition III.10.H.1.a.vii.

Verification: Construction/installation verification is expected to be achieved through the following:

Verif. Method	Verif. By	Plan	Notes/Comments
R/I	ENV	Review completed installation packages and nonconformance reports and construction deficiency reports to confirm the plant was constructed in accordance with the approved designs, plans and specifications. Perform walkdown as necessary to complete verification.	

3.11.13.3 Prevention of Escaping Emissions

Requirement: For each LAW Vitrification System sub-system holding dangerous waste which are acutely or chronically toxic by inhalation, the Permittees will operate the system to prevent escape of vapors, fumes or other emissions into the air [WAC 173-303-806(4)(i)(i)(B) and WAC 173-303-640(5)(e), in accordance with WAC 173-303-680]. [Section III.10.H.1.a.xxix, DWP]

Basis Discussion: This requirement is derived from the Washington Administrative Code (WAC) Dangerous Waste Regulations at WAC Chapter 173-303, specifically the Tank System regulations in WAC 173-303-640. These regulatory requirements have been incorporated into the Dangerous Waste Permit, WTP- Operating Unit Group 10, WA 7890008967, as permit condition III.10.H.1.a.xxix.

Verification: Construction/installation verification is expected to be achieved through the following:

Verif. Method	Verif. By	Plan	Notes/Comments
R/I	ENV	Review as-built P&IDs to verify the system has a vapor collection system and has been constructed according to the design. Perform walkdown as necessary to complete verification.	

3.11.14 LOP/LVP Aboveground Piping

Requirement: Tank system above ground piping shall be constructed of the materials specified in the approved design. [Sections III.10.C.10.a, III.10.C.9.c, III.10.E.2.a, DWP]

Basis Discussion: The requirement to verify the materials for above ground piping is a direct request for ecology to certify the materials in use for the piping. Aboveground piping components include but are not limited to liquid contacting surfaces of pipe, pumps, valves, and instrumentation.

Verification: Construction/installation verification is expected to be achieved through the following:

Verif. Method	Verif. By	Plan	Notes/Comments
R	ENV	Review of construction and installation will be accomplished through the 24590-WTP-GPG-ENG-087, *Statistical Sampling Methods of Engineering Quality Monitoring and Inspection*. Perform walkdown as necessary to complete verification.	

3.11.15 Corrosion Protection for Underground lines

Requirement: The Permittees must provide the type and degree of corrosion protection for underground transfer lines recommended by an independent corrosion expert, based on the information provided in Operating Unit Group 10, Appendix 9.9, and 9.11 of this Permit, as approved pursuant to Permit Conditions III.10.E.9.b.i., III.10.E.9.b.iv., III.10.E.9.b.v., III.10.E.9.c.i., III.10.E.9.c.iv., III.10.E.9.c.v., III.10.E.9.d.i., III.10.E.9.d.iv., and III.10.E.9.d.v. or other corrosion protection if the Ecology believes other corrosion protection is necessary to ensure the integrity of the tank system during use of the tank system. The installation of a corrosion protection system that is field fabricated must be supervised by an independent corrosion expert to ensure proper installation. [Section III.10.E.3.e, DWP]

Basis Discussion: This requirement is derived from the Washington Administrative Code (WAC) Dangerous Waste Regulations at WAC Chapter 173-303, specifically the Tank System regulations in WAC 173-303-640. These regulatory requirements have been incorporated into the Dangerous Waste Permit, WTP- Operating Unit Group 10, WA 7890008967, as permit condition III.10.E.3.e.

At a minimum, the following underground transfer lines are to be evaluated:

- LVP-ZY-00171-W31A-03
- LVP-ZY-00171-W31A-06

This requirement is not applicable to tank systems with components that are not in contact with soil or water.

Verification: Construction/installation verification is expected to be achieved through the following:

Verif. Method	Verif. By	Plan	Notes/Comments
R	ENV	Review the independent corrosion engineering report to verify system conformance through design, procurement, and installation.	

Attachment 7
19-ECD-0036
(11 Pages Excluding Cover Sheet)

24590-LAW-3ZN-LOP-00012

Update LOP SDD to Include Draft DSACP Content, Which Has Been Preauthorized for Early Procurement by the Customer

Issued by
RPP-WTP PDC

System Design Description Change Notice

CHANGE DOCUMENT NO. 24590-LAW-3ZN-LOP-00012

JOB NO.	TITLE FOR CHANGE NOTICE
24590	Update LOP SDD to include draft DSACP content, which has been preauthorized for early procurement by the customer

DOCUMENT NUMBER	REV	DOCUMENT NUMBER	REV
24590-LAW-3ZD-LOP-00001	3		

PART OF DESIGN CHANGE PACKAGE (DCP)? ☐ Yes ☒ No

Justification for no DCP: Use of the DCP process is not required for SDDCNs.

INCORPORATES AN EIE? ☐ Yes ☒ No If yes, list EIEs:

JUSTIFICATION FOR CHANGE

These changes identified in this CN support early procurement and corresponding design activities identified per ORP Authorization for early procurement of systems and components in support of direct feed low-activity waste, CCN 308450.

Supersedes Change Document ☐ Yes ☒ No

REQUIREMENTS REVIEW

Client Approval Required ☐ Yes ☒ No | Interface Resolution Required * ☐ Yes ☒ No

Address any "yes" answers in the description

DESCRIPTION OF CHANGE

The changes are added (underlined) or deleted (~~strikethrough~~) as provided in the attachment.

Change content impacts Pilot actuated valves and vacuum breaker/relief seismic, quality and performance details as identified in sections 3.4.2.19, 3.4.2.20, 3.4.2.21, 3.4.2.26, 3.9.2.7.1.5 and 3.9.2.10.1.5. In addition, added reference to missing LCOs in sections 3.9.2.10.1.3 and 3.9.2.15.2.

ORIGINATOR	CHECKER
ORG/Discipline – Jerid Mauss	Dennis Markman 1/22/19

Validation:	C&I	Neal Schertz		1/23/19
	Organization/Area of Responsibility	*Print/Type Name*	*Signature*	*Date*
Validation:	Mechanical Systems/HVAC	Sarah Barker		1/22/19
	Organization/Area of Responsibility	*Print/Type Name*	*Signature*	*Date*
Validation:	Nuclear Safety	Mike ~~Creutman~~ Shaw MS 1/22/19		1/22/19
	Organization/Area of Responsibility	*Print/Type Name*	*Signature*	*Date*
Concurrence:	NA	NA		
	Title	*Print/Type Name*	*Signature*	*Date*
Concurrence:	Engineering Manager and Design Authority	Ian Milgate		1/23/19
	Title	*Print/Type Name*	*Signature*	*Date*
Approval:	Systems Engineering Manager	Sarah Barker		1/23/19
	Title	*Print/Type Name*	*Signature*	*Date*

Table 2-1 Functional Analysis and Crosswalk Requirements

Reference	Functional Analysis Description	Requirement Section No.
A.	**Safely Treat Melter Offgas to Protect the Public, Environment, and Plant Personnel from Radionuclide and Chemical Exposure**	N/A
A.1	Ventilate (Draw) Melter Offgas – The LOP system draws gases from the melters, maintains a negative pressure in the melter plenums, equipment, and piping relative to adjacent areas, and it confines hazardous gases.	3.4.1.1, 3.4.2.16, 3.4.2.24, 3.4.2.26, 3.5.2.4, 3.4.2.21

3.4.2.19 Safety Classifications

Requirement: The LOP and LVP systems' SSCs shall be classified as safety significant SSCs in accordance with Table 3-2. [Sections 4.4.3.1.1, 4.4.3.6.1, 4.4.3.8.1, 4.4.3.9.1, 4.4.3.11.1, 4.4.3.12.1, 4.4.3.13.1, 4.4.3.15.1, ~~4.4.3.16.1,~~ 4.4.3.17.1, 4.4.3.18.1, 4.4.3.19.1, 4.4.4.1.1.1, 4.4.4.1.4.1, 4.4.4.1.5.1, 4.4.4.1.6.1, 4.4.4.1.7.1, 4.4.4.1.8.1, 4.4.4.1.9.1, 4.4.4.1.10.1, 4.4.4.1.11.1, 4.4.4.1.12.1, 4.4.4.1.13.1, 4.4.4.1.15.1, 4.4.4.1.16.1, 4.4.4.1.17.1, 4.4.4.1.18.1, 4.4.4.1.19.1, 4.4.4.1.20.1, 4.4.4.1.21.1, 4.4.4.1.22.1, Appendix A Table A-1, LAW-DSA]

Table 3-2 LOP and LVP Safety Functions

Equipment/ Component Description	Credited Safety Function	Classifi-cation	Reference
~~Vacuum Breaker~~	~~Mitigates the consequences of a release of radioactive and chemically hazardous material by ensuring sufficient makeup air to support exhauster operation during high/low header vacuum, and loss of power conditions.~~	~~**SS**~~	~~Section 4.4.3.16.1, Appendix A Table A-1, LAW-DSA~~

3.4.2.19.1 Safety Classifications – Protection Against Excess Vacuum Condition

3.4.2.19.1.1 Protection Against Excess Vacuum Condition [A]

Requirement: [HOLD] The LOP and LVP systems SSCs shall be classified as a safety significant in accordance with the following table:

Equipment/ Component Description	Credited Safety Function	Classifi-cation	Reference
Vacuum Breaker	Mitigates the consequences of a release of radioactive and chemically hazardous material by ensuring sufficient makeup air to support exhauster operation during high/low header vacuum, and loss of power conditions.	**SS**	Section 4.4.3.16.1, Appendix A Table A-1, LAW-DSA

[Sections 4.4.3.16.1, Appendix A, Table A-1, LAW-DSA]

Basis Discussion: Mitigates the consequences of a release of radioactive and chemically hazardous material by ensuring sufficient makeup air to support exhauster operation during high/low header vacuum, and loss of power conditions. Requirement is on HOLD as an alternate SSC has been identified in a DSA change package under development, for which the customer has authorized early procurement. Refer to CCN 308450.

Verification: Verification is expected to be achieved through the following:

Verif. Method	Verif. By	Plan	Notes/Comments
R	ENG	Review design to verify the correct safety classifications and safety functions.	

3.4.2.19.1.2 Protection Against Excess Vacuum Condition [B]

Requirement: The LOP and LVP systems SSCs shall be classified as a safety significant in accordance with the following table:

Equipment/ Component Description	Credited Safety Function	Classifi-cation	Reference
Pilot Actuated Control Valves	Mitigates the consequences of a release of radioactive and chemically hazardous material by ensuring sufficient makeup air to support exhauster operation during high/low header vacuum, and loss of power conditions.	SS	Section 4.4.3.16.1, Appendix A Table A-1, LAW-DSA with draft DSACP content

[Sections 4.4.3.16.1, Appendix A, Table A-1, LAW-DSA with draft DSACP content]

Basis Discussion: Mitigates the consequences of a release of radioactive and chemically hazardous material by ensuring sufficient makeup air to support exhauster operation during high/low header vacuum, and loss of power conditions. Requirement has been identified in a DSA change package under development, for which the customer has authorized early procurement. Refer to CCN 308450.

Verification: Verification is expected to be achieved through the following:

Verif. Method	Verif. By	Plan	Notes/Comments
R	ENG	Review design to verify the correct safety classifications and safety functions.	

3.4.2.19.2 Safety Classifications – LVP HEPA Filter Housing Vacuum Relief Valves

Requirement: The LOP and LVP systems SSCs shall be classified as a safety significant in accordance with the following table:

Equipment/ Component Description	Credited Safety Function	Classifi-cation	Reference
LVP HEPA Filter Housing Vacuum Relief Valves	Mitigates the consequences of a release of radioactive and chemically hazardous material by ensuring integrity of the LVP HEPA housings is maintained during high vacuum conditions.	SS	Section 4.4.3.20.1, Appendix A Table A-1, LAW-DSA with draft DSACP content

[Sections 4.4.3.20.1, Appendix A, Table A-1, LAW-DSA with draft DSACP content]

Basis Discussion: Mitigates the consequences of a release of radioactive and chemically hazardous material by ensuring integrity of the LVP HEPA housing is maintained during high vacuum conditions. Requirement has been identified in a DSA change package under development, for which the customer has authorized early procurement. Refer to CCN 308450.

Verification: Verification is expected to be achieved through the following:

Verif. Method	Verif. By	Plan	Notes/Comments
R	ENG	Review design to verify the correct safety classifications and safety functions.	

3.4.2.20 Seismic Design

Requirement: The LOP and LVP systems shall meet SC-III requirements. Based on natural phenomena and confinement considerations, the offgas system components listed in Table 3-3, shall be designed to meet SC-III requirements and perform their safety function under design basis seismic loads. [Safety Criterion 4.1-3, SRD][Sections 4.4.3.1.3, 4.4.3.1.4, 4.4.3.8.3, 4.4.3.8.4, 4.4.3.9.3, 4.4.3.9.4, 4.4.3.11.3, 4.4.3.11.4, 4.4.3.13.3, 4.4.3.13.4, ~~4.4.3.16.3, 4.4.3.16.4,~~ 4.4.3.17.3, 4.4.3.17.4, 4.4.3.18.3, 4.4.3.18.4, 4.4.3.19.3, 4.4.3.19.4, Appendix A Table A-1, LAW-DSA]

Table 3-3 LOP and LVP Seismic Equipment

Description	Seismic Category	Reference
~~Vacuum Breaker~~	~~SC-III~~	~~Sections 4.4.3.16.3, 4.4.3.16.4, Appendix A Table A-1, LAW-DSA~~

3.4.2.20.1 Seismic Design -Protection Against Excess Vacuum Condition

3.4.2.20.1.1 Protection Against Excess Vacuum Condition [A]

Requirement: [HOLD] The LOP and LVP systems shall meet SC-III requirements. Based on natural phenomena and confinement considerations, the offgas system components listed below shall be designed to meet SC-III requirements and perform their safety function under design basis seismic loads:

Description	Seismic Category	Reference
Vacuum Breaker	SC-III	Sections 4.4.3.16.3, 4.4.3.16.4, Appendix A Table A-1, LAW-DSA

[Sections 4.4.3.16.3, 4.4.3.16.4, Appendix A, Table A-1, LAW-DSA]

Basis Discussion: Mitigates the consequences of a release of radioactive and chemically hazardous material by ensuring sufficient makeup air to support exhauster operation during high/low header vacuum, and loss of power conditions. Requirement is on HOLD as an alternate SSC has been identified in a DSA change package under development, for which the customer has authorized early procurement. Refer to CCN 308450.

3.4.2.20.1.2 Protection Against Excess Vacuum Condition [B]

Requirement: The LOP and LVP systems shall meet SC-III requirements. Based on natural phenomena and confinement considerations, the offgas system components listed below shall be designed to meet SC-III requirements and perform their safety function under design basis seismic loads:

Description	Seismic Category	Reference
Pilot Actuated Control Valves	SC-III	Sections 4.4.3.16.3, 4.4.3.16.4, Appendix A Table A-1, LAW-DSA with DSACP

[Sections 4.4.3.16.3, 4.4.3.16.4, Appendix A, Table A-1, LAW-DSA with draft DSACP content]

Basis Discussion: Mitigates the consequences of a release of radioactive and chemically hazardous material by ensuring sufficient makeup air to support exhauster operation during high/low header vacuum, and loss of power conditions. Requirement has been identified in a DSA change package under development, for which the customer has authorized early procurement. Refer to CCN 308450.

Verification: Verification is expected to be achieved through the following:

Verif. Method	Verif. By	Plan	Notes/Comments
A/T	ENG	Perform an analysis or test to verify the ability of the systems piping and equipment to withstand a seismic category SC-III event to maintain confinement.	
R	ENG	Review design to verify alignment with analysis.	

3.4.2.20.2 Seismic Design - LVP HEPA Filter Housing Vacuum Relief Valves

Requirement: The LOP and LVP systems shall meet SC-III requirements. Based on natural phenomena and confinement considerations, the offgas system components listed below shall be designed to meet SC-III requirements and perform their safety function under design basis seismic loads:

Description	Seismic Category	Reference
LVP HEPA Filter Housing Vacuum Relief Valves	SC-III	Sections 4.4.3.20.3, 4.4.3.20.4, Appendix A Table A-1, LAW-DSA with draft DSACP content

[Sections 4.4.3.20.3, 4.4.3.20.4, Appendix A, Table A-1, LAW-DSA with draft DSACP content]

Basis Discussion: Mitigates the consequences of a release of radioactive and chemically hazardous material by ensuring integrity of the LVP HEPA housing is maintained during high vacuum conditions. Requirement has been identified in a DSA change package under development, for which the customer has authorized early procurement. Refer to CCN 308450.

Verification: Verification is expected to be achieved through the following:

Verif. Method	Verif. By	Plan	Notes/Comments
A/T	ENG	Perform an analysis or test to verify the ability of the systems piping and equipment to withstand a seismic category SC-III event to maintain confinement.	
R	ENG	Review design to verify alignment with analysis.	

3.4.2.21 ~~Deleted~~LVP HEPA Filter Housing Vacuum Relief Valves

Requirement: The LVP HEPA Filter Housing Vacuum Relief Valves shall allow sufficient air inflow to maintain system pressure at the LVP HEPA housing above -115 in. WG (HEPA housing design pressure). The LVP HEPA Filter Housing Vacuum Relief Valves shall have a setpoint greater than or equal to -95 in. WG. The LVP HEPA Filter Housing Vacuum Relief Valves shall be sized for a flow capacity of at least 6500 scfm. [Sections 4.4.3.20.3, 4.4.3.20.4, Appendix A Table A-1, LAW-DSA with draft DSACP content](A.1)

Basis Discussion: To protect against excessive vacuum failing the HEPA housing confinement boundary, LVP HEPA Filter Housing Vacuum Relief Valves LVP-SP-00006 and LVP-SP-00007 ensure adequate air inflow. Requirement has been identified in a DSA change package under development, for which the customer has authorized early procurement. Refer to CCN 308450.

Verification: Verification is expected to be achieved through the following:

Verif. Method	Verif. By	Plan	Notes/Comments
A	ENG	Perform an analysis to determine required minimum flow capacity, size and setpoint required of the LVP HEPA Filter Housing Vacuum Relief Valves to maintain system pressure at the LVP HEPA housing above -115 in. WG.	
R	ENG	Review design to verify alignment with the analysis and conformance with the requirement.	
T	SU/ COM	Test to verify the LVP HEPA Filter Housing Vacuum Relief Valves opens at its setpoint.	Testing may be satisfied by calibration program activities.

3.4.2.26 ~~LVP Vacuum Breaker~~Protection Against Excess Vacuum Condition

3.4.2.26.1 Vacuum Control [A]

Requirement: [HOLD] The vacuum breaker shall allow sufficient air inflow to protect the melter from excessive vacuum and maintain continued exhauster operation during reconfiguration of the melter offgas system, without causing a loss of melter vacuum due to too much vacuum breaker air in-leakage. The vacuum breaker shall maintain system pressure between -60 in. W.G. and -67 in. W.G. at the exhauster suction, and shall be sized for a flow capacity of at least 4,275 scfm. [Sections 4.4.3.16.3, 4.4.3.16.4, Appendix A Table A-1, LAW-DSA](A.1)

Basis Discussion: Reduces the probability of a release of radioactive and chemically hazardous material by ensuring sufficient makeup air to support exhauster operation during high/low header vacuum, and loss of power conditions. Requirement is on HOLD as an alternate SSC has been identified in a DSA change package under development, for which the customer has authorized early procurement. Refer to CCN 308450.

3.4.2.26.2 Vacuum Control [B]

Requirement: The Pilot Actuated Control Valves shall allow sufficient air inflow to protect the melter from excessive vacuum and maintain continued exhauster operation during reconfiguration of the melter offgas system, without causing a loss of melter vacuum due to too much air in-leakage. The Pilot Actuated Control Valves shall have a setpoint between -65.8 in. WG and -73.7 in. WG. The main valves (LVP-PCV-0455A and LVP-PCV-0456A) shall be sized for a flow capacity of 300 to 3,200 scfm. [Sections 4.4.3.16.3, 4.4.3.16.4, 4.4.3.16.5, Appendix A Table A-1, LAW-DSA with draft DSACP content](A.1)

Basis Discussion: The Pilot Actuated Control Valves allow sufficient air inflow to maintain system pressure within the stonewall and surge limits of the exhauster, without causing a loss of melter vacuum due to too much air in-leakage. Requirement has been identified in a DSA change package under development, for which the customer has authorized early procurement. Refer to CCN 308450.

Verification: Verification is expected to be achieved through the following:

Verif. Method	Verif. By	Plan	Notes/Comments
A	ENG	Perform an analysis to determine the size and setpoint of the Pilot Actuated Control Valves, and the corresponding size of the main valves to allow sufficient air inflow to protect the melter from excessive vacuum.	
R	ENG	Review design to verify alignment with analysis.	
T	SU/ COM	Test to verify the Pilot Actuated Control Valves LVP-PCV-0455A/B and LVP-PCV-0456A/B opening setpoint actuation is within the specified range and aligns with the analysis.	Testing may be satisfied by calibration program activities.

3.9.2.7.1.5 Offgas Header High and Low Pressure Interlock (Reduce Offgas Load)

3.9.2.7.1.5.1 Offgas Header High and Low Pressure Interlock (Reduce Offgas Load) [A]

Requirement: **[HOLD]** Upon detection of high offgas header pressure (LVP-PT-0139/0140), the interlock shall restrict the exhausters to a speed compatible with the reduced offgas load by setting exhausters to fixed speed and opening the vacuum breaker line valves (final elements listed below). The interlock shall set the exhausters to fixed speed and open vacuum breaker line valves if the header pressure is greater than or equal to an analytical limit of -56.5 in. WG or the header negative pressure exceeds an analytical limit of -139.5 in. WG. To achieve this condition, an instrument LTSP less than -57.27 in. WG shall be utilized for header high pressure and an instrument LTSP of greater than -137.76 in. WG for header low pressure. The maximum allowed from detection of header low or high pressure condition to completion of reconfiguring the final elements into the safe state configuration shall be 84.5 seconds.

- Set offgas exhausters to fixed 2020 RPM speed (LVP-EXHR-00001A [LVP-YC-0023B], LVP-EXHR-00001B [LVP-YC-0020B], and LVP-EXHR-00001C [LVP-YC-0017B])
- Open LVP bypass vacuum breaker isolation valves (LVP-YV-0453/0454)

[Sections 4.4.4.1.9.3, 4.4.4.1.9.4, 4.4.4.1.9.5, 4.4.4.1.10.3, 4.4.4.1.10.4, 4.4.4.1.10.5, Appendix A Table A-1, LAW-DSA][LCO 3.3.2, LAW TSR] (D.2)

Basis Discussion: The interlock limits the release of radioactive and chemically hazardous material by reducing sources of offgas and reconfiguring the offgas system to maintain melter plenum vacuum in the event of high or low pressure in the LVP header. ~~Note that the term "exceed" should be interpreted as to reach a value more negative (pressure) than the~~

~~given value.~~ Requirement is on HOLD as an alternate SSC has been identified in a DSA change package under development, for which the customer has authorized early procurement. Refer to CCN 308450.

Verification: Verification is expected to be achieved through the following:

Verif. Method	Verif. By	Plan	Notes/Comments
A	**ENG**	Perform an analysis to determine the offgas header high and low pressure interlock setpoints.	~~May be documented in assessment/evaluation report.~~
A	**ENG**	Perform an analysis to determine the offgas header high and low pressure interlock response times.	

3.9.2.7.1.5.2 Offgas Header High and Low Pressure Interlock (Reduce Offgas Load) [B]

Requirement: Upon detection of high offgas header pressure (LVP-PT-0139/0140), the interlock shall restrict the exhausters to a speed compatible with the reduced offgas load by setting exhausters to fixed speed and opening the vacuum relief isolation valves (final elements listed below). The interlock shall set the exhausters to fixed speed and open vacuum relief isolation valves if the header pressure is greater than or equal to an analytical limit of -56.5 in. WG or the header negative pressure exceeds an analytical limit of -139.5 in. WG. To achieve this condition, an instrument LTSP less than -57.27 in. WG shall be utilized for header high pressure and an instrument LTSP of greater than -137.76 in. WG for header low pressure. The maximum allowed from detection of header low or high pressure condition to completion of reconfiguring the final elements into the safe state configuration shall be 84.5 seconds.

- Set offgas exhausters to fixed 2000 RPM speed (LVP-EXHR-00001A [LVP-YC-0023B], LVP-EXHR-00001B [LVP-YC-0020B], and LVP-EXHR-00001C [LVP-YC-0017B])
- Open LVP vacuum relief isolation valves (LVP-YV-0453/0454)

[Sections 4.4.4.1.9.3, 4.4.4.1.9.4, 4.4.4.1.9.5, 4.4.4.1.10.3, 4.4.4.1.10.4, 4.4.4.1.10.5, Appendix A Table A-1, LAW-DSA with draft DSACP content][LCO 3.3.2, LAW TSR] (D.2)

Basis Discussion: The interlock limits the release of radioactive and chemically hazardous material by reducing sources of offgas and reconfiguring the offgas system to maintain melter plenum vacuum in the event of high or low pressure in the LVP header. Requirement has been identified in a DSA change package under development, for which the customer has authorized early procurement. Refer to CCN 308450.

Verification: Verification is expected to be achieved through the following:

Verif. Method	Verif. By	Plan	Notes/Comments
A	**ENG**	Perform an analysis to determine the offgas header high pressure interlock setpoints.	
A	**ENG**	Perform an analysis to determine the offgas header high pressure interlock response times.	
R	**ENG**	Review design to verify there are interlock instruments and components that: • Monitors the LVP header pressure and initiates the interlock • Sets offgas exhausters to fixed speed • Opens vacuum relief isolation valves	

Verif. Method	Verif. By	Plan	Notes/Comments
T	SU/ COM	Perform a test to verify the interlock: • Monitors the LVP header pressure and initiates the interlock • Sets offgas exhausters to fixed speed • Opens vacuum relief isolation valves	

3.9.2.10.1.3 Loss of Normal Power to Safety Equipment Interlock (Reduce Exhauster Suction Load)

Requirement: Upon detection of loss of normal power (UPE-YY-2303/2403/2503), the interlock shall reduce exhauster suction load (final elements listed below). The interlock shall reduce suction loads within 5 minutes of a sustained loss of power (maintains event duration within capacity of the UPE). The undervoltage instrument trip setpoint shall be above 384 V for 5 seconds. A valid signal from any two of the low voltage sensors shall activate the interlock.

- Open standby film cooler isolation valves (LOP-YV-1008/2008)
- Open WESP outlet flow control valves (LOP-FV-1140/2140)
- Close vessel vent header pressure control valve (LVP-PV-0072)
- Open carbon bed adsorber bypass valve (LVP-YV-0403)
- Open TCO skid bypass valve (LVP-YV-0501)
- Open caustic scrubber bypass valve (LVP-YV-0097)

[Sections 4.4.4.1.22.3, 4.4.4.1.22.4, 4.4.4.1.22.5, Appendix A Table A-1, LAW-DSA][LCO 3.3.2, 3.3.6, LAW TSR] (D.2)

3.9.2.10.1.5 Loss of Normal Power to Safety Equipment Interlock (Fix Exhauster Speed)

3.9.2.10.1.5.1 Loss of Normal Power to Safety Equipment Interlock (Fix Exhauster Speed) [A]

Requirement: [HOLD] Upon detection of loss of normal power (UPE-YY-2303/2403/2503), the interlock shall restrict the exhausters to a speed compatible with the reduced offgas load (final elements listed below). The interlock shall set the exhausters to a fixed speed and open vacuum breaker line valves within 5 minutes of a sustained loss of power (maintains event duration within capacity of the UPE). The undervoltage instrument trip setpoint shall be above 384 V for 5 seconds. A valid signal from any two of the low voltage sensors shall activate the interlock.

Basis Discussion: The interlock limits the release of radioactive and chemically hazardous material by reducing sources of offgas and reconfiguring the offgas system to maintain melter plenum vacuum in the event of high or low pressure in the LVP header. Note that the term "exceed" should be interpreted as to reach a value more negative (pressure) than the given value. Requirement is on HOLD as an alternate SSC has been identified in a DSA change package under development, for which the customer has authorized early procurement. Refer to CCN 308450.

3.9.2.10.1.5.2 Loss of Normal Power to Safety Equipment Interlock (Fix Exhauster Speed) [B]

Requirement: Upon detection of loss of normal power (UPE-YY-2303/2403/2503), the interlock shall restrict the exhausters to a speed compatible with the reduced offgas load (final elements listed below). The interlock shall set the exhausters to a fixed speed and open vacuum relief isolation line valves within 5 minutes of a sustained loss of power (maintains event duration within capacity of the UPE). The undervoltage instrument trip setpoint shall be above 384 V for 5 seconds. A valid signal from any two of the low voltage sensors shall activate the interlock.

- Set exhauster(s) to a fixed 2000 RPM speed (LVP-EXHR-00001A [LVP-YC-0023B], LVP-EXHR-00001B [LVP-YC-0020B], and LVP-EXHR-00001C [LVP-YC-0017B])
- Open LVP vacuum relief isolation valves (LVP-YV-0453/0454)

[Sections 4.4.4.1.22.3, 4.4.4.1.22.4, 4.4.4.1.22.5, Appendix A Table A-1, LAW-DSA with draft DSACP content][LCO 3.3.6, LAW TSR] (D.2)

Basis Discussion: The interlock limits the release of radioactive and chemically hazardous material, in the event of loss of normal power, by terminating feed to both melters, isolating ammonia supply, and reconfiguring the offgas system in the event of a loss of normal power. Requirement has been identified in a DSA change package under development, for which the customer has authorized early procurement. Refer to CCN 308450.

Verification: Verification is expected to be achieved through the following:

Verif. Method	Verif. By	Plan	Notes/Comments
R	ENG	Review design for incorporation of the system specific interlock physical components.	
T	SU/ COM	Perform a test to demonstrate that within 5 minutes of detection of sustained loss of normal power (UPE-YY-2303/-2403/-2503), the interlock performs the following and maintains event duration within capacity of the UPE: • Sets exhauster(s) to fixed speed • Opens vacuum relief isolation valves	

3.9.2.15.2 Pneumatic Permissive for Carbon Bed Adsorber Bypass Valves

Requirement: The pneumatic permissive shall prevent the carbon bed adsorber inlet valves (LVP-YV-0407, LVP-YV-0415, LVP-YV-0449) from closing while the carbon bed adsorber bypass valve (LVP-YV-0403) is closed. Independent of PPJ time delay, the carbon bed adsorber bypass valve (LVP-YV-0403) shall begin to open before or at the same time as the carbon bed adsorber inlet valves (LVP-YV-0407, LVP-YV-0415, LVP-YV-0449) begin to close. Independent of PPJ time delay, the carbon bed adsorber bypass valve (LVP-YV-0403) shall be in its end state open position prior to the carbon bed adsorber inlet valves (LVP-YV-0407, LVP-YV-0415, LVP-YV-0449) reaching their end state closed position. [Sections 4.4.3.15.3,4.4.3.15.4 Appendix A Table A-1, LAW-DSA][LCO 3.3.1, 3.3.3 and 3.3.6, LAW-TSR]

Appendix A Test Objectives, Conditions, and Acceptance Criteria

Requirement (para #)	Plan (including SSCs)	Acceptance Criteria (test acceptance criteria (**TAC) or general test criteria (GTC))*	Notes/Comments	Test Conditions
3.4.2.26 **[HOLD]**	Test to verify the vacuum breaker maintains offgas header pressure between -60 in WG and -67 in WG at a flow capacity of at least 4,275 scfm, measured at a location between the caustic scrubber and the exhauster suction, with the offgas system in the reconfiguration line-up. The test shall confirm acceptable pressure for one, two and three online fan configurations (at reconfiguration speed). **CTNs:** LVP-VACB-00001 LVP-VACB-00002	**(TAC) [HOLD]** Exhauster suction pressure is maintained between -60 in. WG and -67 in. WG and the vacuum breaker has a flow capacity of at least 4275 scfm	Per 24590-LAW-DSA-NS-18-0001 Section 4.4.3.16.4 and Appendix D of 24590-LAW-M6C-LVP-00004, 4275 SCFM occurs with a 1 melter and 3 exhauster configuration and represents the combined total of the breakers.	
3.9.2.7.1.5 **[HOLD]**	Test to verify the interlock reconfigures the offgas system to a known state when a ~~high~~ LVP header high or low pressure~~vacuum~~ is detected. **CTNs** LVP-PT-0139 LVP-PT-0140 LVP-EXHR-00001A LVP-EXHR-00001B LVP-EXHR-00001C LVP-YV-0453 LVP-YV-0454	**(TAC) [HOLD]** Upon instrument channel detection for offgas header ~~pressure~~ high and low pressure, the PPJ: • Set offgas exhausters to fixed speed (~~2020~~ 2000 RPM) within 29.1 seconds. • Open LVP bypass vacuum relief~~breaker~~ isolation valves within 39.5 seconds.	References: 24590-LAW-M6C-LVP-00016, *Analytical Limits for the LAW LVP Header High Pressure and LVP Header Low Pressure Interlocks* 24590-LAW-J3C-PPJ-00008, *Setpoint Calculation for High Header Pressure / Low Header Pressure Interlocks* LCO 3.3.2, *LAW TSR*	LFP, PSW, AMR, ISA, PCJ and PPJ systems. An instrument LTSP less than -57.27 in. WG for testing header high pressure from sensing elements LVP-PT-0139/0140. An instrument LTSP greater than -137.76 in. WG for testing header low pressure from sensing elements LVP-PT-0139/0140.
3.9.2.10.1.5 **[HOLD]**	Test to verify the following functions are performed upon detection of sustained loss of normal power: • Vacuum relief isolation ~~breaker line~~ valves open • Exhauster(s) are set to fixed speed (~~2020~~ 2000 RPM) **CTNs** UPE-YY-2303 UPE-YY-2403 UPE-YY-2503 LVP-EXHR-00001A LVP-EXHR-00001B LVP-EXHR-00001C LVP-YV-0453 LVP-YV-0454	**(TAC) [HOLD]** Upon detection of sustained loss of normal power (> 5 seconds) by 2 of 3 low voltage sensors, the PPJ: • Set exhauster(s) to fixed speed (~~2020~~ 2000 RPM) within 90.5 seconds • Opens LVP ~~bypass~~ Vacuum ~~breaker~~relief isolation valves within 76.5 seconds	References: 24590-LAW-M6C-LVP-00007, *Power Requirement for LVP Exhausters LVP-EXHR-00001A/B/C* 24590-LAW-U3C-PPJ-00008, *PFD Calculation for LAW Loss of Normal Power to Safety Equipment and Offgas Header High/Low Pressure Interlocks* LCO 3.3.6, LAW TSR	An instrument LTSP greater than 384 VAC for 5 seconds for loss of normal power alarm relays (UPE-YY-2303, UPE-YY-2403, and UPE-YY-2503)

Attachment 8
19-ECD-0036
(1 Page Excluding Cover Sheet)

24590-LAW-3ZN-RLD-00009

Update RLD SDD to Correct Language for Coaxial Pipelines Provision Supporting Testing

System Design Description Change Notice

CHANGE DOCUMENT NO. 24590-LAW-3ZN-RLD-00009

JOB NO.	TITLE FOR CHANGE NOTICE
24590	Update RLD SDD to Correct Language for Coaxial Pipelines Provision Supporting Testing

DOCUMENT NUMBER	REV	DOCUMENT NUMBER	REV
245980-LAW-3ZD-RLD-00001	3		

PART OF DESIGN CHANGE PACKAGE (DCP)? ☐ Yes ☒ No

Justification for no DCP: Impacted SSC has not been turned over to the Plant Management organization.

INCORPORATES AN EIE? ☐ Yes ☒ No If yes, list EIEs:

JUSTIFICATION FOR CHANGE

The ORD statement used for the requirement was incorrect. The statement has now been incorporated correctly into the TRMS from issued ORDCN No. 24590-WTP-ORDCN-OP-16-013

Supersedes Change Document ☐ Yes ☒ No

REQUIREMENTS REVIEW

Client Approval Required ☐ Yes ☒ No | Interface Resolution Required * ☐ Yes ☒ No

Address any "yes" answers in the description

DESCRIPTION OF CHANGE

Update 24590-WTP-3ZD-RLD-00001 REV 2 with the additions (underline) and deletions (~~strikethrough~~) per the following:

3.6.2.5 Requirement: Coaxial line (pipe-in-pipe) used as underground transfer lines ~~design~~shall have the provision to pneumatically test both primary and secondary lines for leakage.

ORIGINATOR	CHECKER
ORG/Discipline – Dennis Markman 3/19/19	Jerid Mauss

Validation:	Mechanical Senior EGS	Sarah Barker		3/19/19
	Organization/Area of Responsibility	*Print/Type Name*	*Signature*	*Date*
Concurrence:	LBL Nuclear Safety Manager	Mike Shaw	Reviewed No Comments By: Mike Shaw - mwshaw Org Name: BNI Placed: Mar 18, 2019	
	Title	*Print/Type Name*	*Signature*	*Date*
Concurrence:				
	Title	*Print/Type Name*	*Signature*	*Date*
Approval:	Systems Engineering Manager	Sarah Barker		3/19/19
	Title	*Print/Type Name*	*Signature*	*Date*

Attachment 9
19-ECD-0036
(4 Pages Excluding Cover Sheet)

24590-WTP-3ZN-ASX-00004

Incorporation of Work Off Items into the WTP ASX SDD
24590-WTP-3ZN-ASX-00001, Rev. 1

ISSUED BY

RPP-WTP PDC

System Design Description Change Notice

CHANGE DOCUMENT NO. 24590-WTP-3ZN-ASX-00004

JOB NO.	TITLE FOR CHANGE NOTICE
24590	Incorporation of work off items into the WTP ASX SDD 24590-WTP-3ZD-ASX-00001 Rev 1

DOCUMENT NUMBER	REV	DOCUMENT NUMBER	REV
24590-WTP-3ZD-ASX-00001	1		

PART OF DESIGN CHANGE PACKAGE (DCP)? ☐ Yes ☒ No

Justification for no DCP: Impacted SSC has not been turned over to the Plant Management organization.

INCORPORATES AN EIE? ☒ Yes ☐ No If yes, list EIEs: 24590-WTP-EIE-SYSE-17-0001 Rev. 0
24590-WTP-EIE-SYSE-16-0085 Rev. 0
24590-LAW-EIE-M-16-0040 Rev. 0
24590-LAW-EIE-NS-17-0001 Rev. 0

JUSTIFICATION FOR CHANGE

Work off items necessary for LAW construction complete are captured by the incorporation of the EIEs in this SDDCN.

Supersedes Change Document ☐ Yes ☒ No

REQUIREMENTS REVIEW

Client Approval Required ☐ Yes ☒ No | Interface Resolution Required * ☐ Yes ☒ No

Address any "yes" answers in the description

DESCRIPTION OF CHANGE

The following EIE has **no impact to the SDD**

24590-LAW-EIE-M-16-0040 Rev. 0 – No impact to ASX SDD. The ASX is a pneumatic system and the transient loads are insignificant as shown in 24590-LAW-M6C-20-00007, Att. B and specifically stated in 24590-LAW-P6C-P40T-00001 R1, Section 8. Valve closure times are covered by Startup generic testing procedures.
24590-LAW-EIE-NS-17-0001 Rev. 0 – Overcome by DSA implementation – No impact
24590-WTP-EIE-SYSE-17-0001 Rev. 0 – No impact. DFLAW EMF will not utilize the auto sampling system

The following EIE **impacted the SDD**

24590-WTP-EIE-SYSE-16-0085 Rev. 0 – Incorporated into section 3.4.1.3

The following is a brief description of changes in each section of the SDD. Attachment A contains detailed changes that are added (underlined) or deleted (~~strikethrough~~).

Section 3.4.1.3 – Incorporated SRD requirement, moved BOD requirement to section 3.4.2.2
Section 3.4.2.2 – Incorporated BOD requirement into section

ORIGINATOR	CHECKER
ORG/Discipline – Jeff Walkley Jerid Mauss	Claude Kabera **Checked** By: Claude Kabera - ckabera Org Name: Bechtel National Placed: Aug 23, 2018

Validation:	See Attached	See Attached		
	Organization/Area of Responsibility	*Print/Type Name*	*Signature*	*Date*
Concurrence:	N/A	N/A		
	Title	*Print/Type Name*	*Signature*	*Date*
Concurrence:	Manager of Engineering and Design Authority	Ian Milgate		8/23/18
	Title	*Print/Type Name*	*Signature*	*Date*
Approval:	Systems Engineering Manager	Sarah Barker		8-23-18
	Title	*Print/Type Name*	*Signature*	*Date*

Validation

Appl.	Requirement Area	Requirement Developer	Signature	Date
☐	Architectural Design			
☐	Civil/Structural Design			
☑	Controls & Instrumentation Design	**Neal Schertz**	[illegible]	8/23/18
☑	Electrical Design & AHJ	**Scott Goad**	per email	8-22-18
☐	Fire Protection Engineering			
☐	HVAC Design			
☐	Mechanical Handling Design			
☑	Mechanical Systems Design	**Sarah Barker**	[illegible]	8-23-18
☐	Plant Design			
☐	Process Engineering			
☐	Interface (External)			
☐	Interface (Internal)			
☐	System Functions and Requirements			
☐	Equipment Environmental Qualification			
☐	Materials Engineering / Technology			
☐	Plant Software Design			
☐	Environmental Permitting (ESH)			
☑	Nuclear Safety Engineering	**Kraig Wendt**	K. Wendt	8-22-18
☐	Criticality Safety			
☐	Radiological Engineering			
☐	Industrial Safety/Hygiene (ESH)			
☐	Mission (WTP Contract functional/ performance rqmts)			
☐	Operations Requirements Document (Plant Ops)			
☐	Quality Assurance			
☐	Safeguards & Security			
☐	Startup			
☐	Transportation & Logistics			

* Validation not required for alpha/preliminary design description documents.

No NSE comment; see SE screen for EIE and EDR
24590-WTP-SE-NS-18-0294. K. Wendt 8-22-18

3.4.1.3 ~~Room Environment Conditions for~~ Design and Qualification of Safety and PAM SSCs

Requirement: Safety structures systems and components designated as Safety Class or Safety Significant shall be designed and qualified to function as intended in the environmental conditions associated with the events for which they are intended to respond. Environmental qualification will be to IEEE 323-83. The effects of aging on normal and abnormal functioning shall be considered in the design and qualification using IEEE 323-83. For the LBL Facilities only SS SSCs required to operate in harsh environments and credited for radiological and/or chemical hazards shall be qualified using IEEE 323-83. Instrumentation and controls shall be provided to monitor variables and systems and control systems and components over their anticipated ranges for normal operation, for anticipated operational occurrences, and for accident conditions as appropriate (includes PAM instruments).~~The safety equipment in the ASX credited with any safety function and PAM instruments shall be designed and qualified to perform their safety/PAM function(s) as intended in the environment conditions associated with the events for which they are intended to respond, inclusive of aging effects, throughout their qualified life.~~ [Safety Criterion 4.3-4, 4.4-1, SRD] [Section 11.7.3, BOD]

Basis Discussion: None.~~Safety SSCs designated as safety class (SC) or safety significant (SS) are designed and qualified to function as intended in the room environment conditions associated with the events for which they are intended to respond. The effects of aging on normal and abnormal functioning are considered in design and qualification. 24590-HLW-RPT-ENS-12-002, *HLW Post Accident Monitoring Report* identifies PAM instrumentation for ASX.~~

~~Facility Room Environment Data Sheets identify environmental conditions for rooms that house safety SSCs and are listed below~~:

- ~~24590-HLW-U0D-W16T-00001, *HLW Room Environment Data Sheet*~~
- ~~24590-LAB-U0D-W16T-00001, *Analytical Laboratory (Lab) Room Environment Data Sheet*~~
- ~~24590-LAW-U0D-W16T-00001, *LAW Room Environment Data Sheet*~~
- ~~24590-PTF-U0D-W16T-00001, *PTF Room Environment Data Sheet*~~
- ~~24590-WTP-U0D-W16T-00001, *WTP Outdoor Environment Data Sheet*~~

Verification: Verification is expected to be achieved through the following:

Verif. Method	Verif. By	Plan	Notes/Comments
A/T	**ENG**	Perform analysis or testing to verify the ability of the SSCs identified as PAM or designated as safety to function as intended in the~~credited with a safety function and (/or) PAM to withstand~~ environmental conditions associated with the events for which they are intended to respond. ~~associated with the events for which they are intended to respond.~~	~~Document in EQP. Refer to Facility Room Environment Data Sheets referenced above, for room environment conditions.~~
R	**ENG**	Review the design to verify conformance to the as-tested or as-analyzed configuration.~~Review design to verify that the Safety SSCs are designed and qualified to function as intended in the specified environmental conditions.~~	~~Document in EQP.~~

3.4.1.4 Room Environment Conditions for ~~Non-Safety~~ SSCs

Requirement: The ASX equipment and components ~~tagged non-safety~~ shall be designed to operate and withstand the facility internal environment conditions. [Section 12.15, Table 12-1, BOD] [Section16.1, ORD]

Basis Discussion: ~~Non-safety~~ SSCs are designed to function as intended in the room environment conditions associated with their location.

Verification: Verification is expected to be achieved through the following:

Verify. Method	Verify. By	Plan	Notes/Comments
R	**ENG**	Review design to verify that the ~~non-safety~~ SSCs are designed to function as intended in BOD Table 12-1 conditions.	May be documented in an assessment or evaluation.

3.4.2.2 Seismic Design

Requirement: The ASX equipment, including PAM, shall be designed and qualified for seismic categories (e.g., SC-I, SC-II, SC-III) in accordance with Table 3-2 below. [Sections 4.4.19, 4.4.19.4, 4.4.27, HLW PDSA] [Sections 4.4.9.3, 4.4.33.3, PT PDSA] [Section 4.4.4.3, Table 3A-6, Lab PDSA] [Sections 4.1-3, 4.3-4, SRD] [Section 11.7.3, BOD]