0041141

5

APR 27 1995

ENGINEERING DATA TRANSMITTAL

1. EDT 608948

2. To: (Receiving Organization) SOLID WASTE MANAGEMENT	3. From: (Originating Organization) SOLID WASTE MANAGEMENT	4. Related EDT No.: N/A
5. Proj./Prog./Dept./Div.: SOLID WASTE DISPOSAL	6. Cog. Engr.: KM MCDONALD	7. Purchase Order No.: MJV-SVV-293887
8. Originator Remarks: THIS EDT IS FOR THE APPROVAL AND RELEASE OF THE FIRE HAZARD ANALYSIS OF THE RADIOLOGICAL MIXED WASTE TRENCHES.		9. Equip./Component No.: N/A
		10. System/Bldg./Facility: 218-W-5, RMW TRENCHES
11. Receiver Remarks:		12. Major Assm. Dwg. No.: N/A
		13. Permit/Permit Application No.: N/A
		14. Required Response Date:

MAY 1995 RECEIVED EDMC

15. DATA TRANSMITTED

(A) Item No.	(B) Document/Drawing No.	(C) Sheet No.	(D) Rev. No.	(E) Title or Description of Data Transmitted	(F) Approval Designator	(G) Reason for Transmittal	(H) Originator Disposition	(I) Receiver Disposition
1	WHC-SD-WM-FHA-010	ALL	0	FIRE HAZARD ANALYSIS OF THE RADIOACTIVE MIXED WASTE TRENCHES	SQ	1		

16. KEY

Approval Designator (F)	Reason for Transmittal (G)		Disposition (H) & (I)	
E, S, Q, D or N/A (see WHC-CM-3-5, Sec.12.7)	1. Approval 2. Release 3. Information	4. Review 5. Post-Review 6. Dist. (Receipt Acknow. Required)	1. Approved 2. Approved w/comment 3. Disapproved w/comment	4. Reviewed no/comment 5. Reviewed w/comment 6. Receipt acknowledged

17. SIGNATURE/DISTRIBUTION (See Approval Designator for required signatures)

(G) Reason	(H) Disp.	(J) Name	(K) Signature	(L) Date	(M) MSIN	(J) Name	(K) Signature	(L) Date	(M) MSIN	(G) Reason	(H) Disp.
1	1	Cog.Eng. KM MCDONALD		4/24/95	T4-03	RW WHITLOCK		4/27/95	T4-03	1	1
1	1	Cog. Mgr. DB POWELL		4/25/95	T4-03	DL OAR			T4-03	3	
1	1	QA DL VANCE		4/25/95	T4-06						
1	1	Safety ML GRAHAM		4/25/95							
		Env. N/A									
1	1	FIRE PROTECTION JR KEENE		4/27/95	S2-42						

18.	19.	20.	21. DOE APPROVAL (if required)
LJ GASCHOTT 4/29/95 Signature of EDT Originator Date	Authorized Representative for Receiving Organization Date	Cognizant Manager Date 4/25/95	Ctrl. No. [] Approved [] Approved w/comments [] Disapproved w/comments

BD-7400-172-2 (04/94) GEF097

BD-7400-172-1 (07/91)

RELEASE AUTHORIZATION

Document Number:	WHC-SD-WM-FHA-010, REV 0
Document Title:	FIRE HAZARD ANALYSIS OF THE RADIOACTIVE MIXED WASTE TRENCHES
Release Date:	4/27/95

This document was reviewed following the procedures described in WHC-CM-3-4 and is:

APPROVED FOR PUBLIC RELEASE

WHC Information Release Administration Specialist:

Kara M. Broz — April 27, 1995

Kara M. Broz

TRADEMARK DISCLAIMER. Reference herein to any specific commercial product, process, or service by trade name, trademark, manufacturer, or otherwise, does not necessarily constitute or imply its endorsement, recommendation, or favoring by the United States Government or any agency thereof or its contractors or subcontractors.

This report has been reproduced from the best available copy. Available in paper copy and microfiche. Printed in the United States of America. Available to the U.S. Department of Energy and its contractors from:

U.S. Department of Energy
Office of Scientific and Technical Information (OSTI)
P.O. Box 62
Oak Ridge, TN 37831
Telephone: (615) 576-8401

Available to the public from: U.S. Department of Commerce
National Technical Information Service (NTIS)
5285 Port Royal Road
Springfield, VA 22161
Telephone: (703) 487-4650

SUPPORTING DOCUMENT

1. Total Pages 45

2. Title	3. Number	4. Rev No.
FIRE HAZARD ANALYSIS OF THE RADIOACTIVE MIXED WASTE TRENCHES	WHC-SD-WM-FHA-010	0

5. Key Words	6. Author
FHA, FIRE HAZARD ANALYSIS, RADIOACTIVE MIXED WASTE TRENCH, TRENCH 31, TRENCH 34	Name: KM MCDONALD K.M. McDonald 4/24/95 Signature Organization/Charge Code 87250/A7D38

7. Abstract

This Fire Hazards Analysis (FHA) is intended to assess comprehensively the risk from fire associated with the disposal of low level radioactive mixed waste in trenches within the lined landfills, provided by Project W-025, designated Trench 31 and 34 of the Burial Ground 218-W-5.

The fire hazards and associated risks which exist within Trenches 31 and 34 are consistent with the loss limitations stipulated by DOE 5480.7A Fire Protection. Recommendations are provided in keeping with DOE 5480.7A's objective and Westinghouse Hanford's commitment to minimize the potential for the occurrence of a fire or related perils.

8. RELEASE STAMP

OFFICIAL RELEASE BY WHC (5)
DATE APR 27 1995
Sta. 4

FIRE HAZARD ANALYSIS

OF THE

RADIOACTIVE MIXED WASTE

TRENCHES

WHC-SD-WM-FHA-010 Rev. 0

Prepared for:

Westinghouse Hanford Company
P.O. Box 1970
Richland, Washington 99352

Prepared by:

Columbia Energy and Environmental Services, Inc.
1207 George Washington Way, Suite 22
Richland, Washington 99352

April 13, 1995

Stephen D. Thorne P.E.
Thorne & Associates
Columbia Energy & Environmental Services, Inc.
WHC PO No.MJL-SVV-293887, Task No. 95-09

4/13/95
Date

Jim Keene
Fire Protection
Solid Waste Disposal Safety
Westinghouse Hanford Company

27 April 1995
Date

K.M. McDonald
Cognizant Engineer
Solid Waste Management Facility Engineering
Westinghouse Hanford Company

4/26/95
Date

R.W. Whitlock
Radioactive Mixed Waste Disposal
Solid Waste Management Facility Engineering
Westinghouse Hanford Company

4/27/95
Date

TABLE OF CONTENTS

ABBREVIATIONS, ACRONYMS, AND INITIALISMS 5

1.0 INTRODUCTION 7

2.0 SUMMARY AND CONCLUSIONS 8

3.0 DESCRIPTION OF CONSTRUCTION AND OPERATION 8

4.0 FIRE PROTECTION FEATURES 17

5.0 DESCRIPTION OF FIRE HAZARDS 17
- 5.1 CONTAINER FAILURE CRITERIA 18
- 5.2 ACCIDENT ANALYSIS 18
  - 5.2.1 Fuel Spill 18
  - 5.2.2 Tumbleweeds Fire 24
  - 5.2.3 Bulk Waste Fire 25
  - 5.2.4 Radiological Release Potential 25
- 5.3 RECOMMENDATIONS 26

6.0 PROTECTION OF ESSENTIAL SAFETY CLASS SYSTEMS 27

7.0 LIFE SAFETY CONSIDERATIONS 27

8.0 CRITICAL PROCESS EQUIPMENT 27

9.0 HIGH VALUE PROPERTY 27

10.0 DAMAGE POTENTIAL 27
- 10.1 MAXIMUM CREDIBLE FIRE LOSS (MCFL) 27
- 10.2 MAXIMUM POSSIBLE FIRE LOSS (MPFL) 27

11.0 FIRE DEPARTMENT/BRIGADE RESPONSE 30

12.0 RECOVERY POTENTIAL 30

13.0 POTENTIAL FOR A TOXICOLOGICAL, BIOLOGICAL, AND/OR RADIOLOGICAL INCIDENT DUE TO A FIRE 31

14.0 EMERGENCY PLANNING 31

15.0 SECURITY AND SAFEGUARDS CONSIDERATIONS RELATED TO FIRE PROTECTION 31

TABLE OF CONTENTS (CONTINUED)

16.0 NATURAL HAZARDS IMPACT ON FIRE SAFETY 32
16.1 FLOODS 32
16.2 TORNADOES 32
16.3 EARTHQUAKES 32

17.0 EXPOSURE FIRE POTENTIAL 33

18.0 RECOMMENDATIONS 33

19.0 REFERENCES 35

APPENDIX A - POSTULATED FIRES AND RADIOLOGICAL RELEASE CALCULATIONS 37

LIST OF FIGURES

Figure 3-1 HANFORD 200 WEST AREA LOCATION 9

Figure 3-2 200 WEST AREA 10

Figure 3-3 TRENCH 31 DESIGN 12

Figure 3-4 TRENCH 31, CROSS SECTION - LINER SYSTEM DETAILS 13

Figure 3-5 DOT 17C CONTAINER AND DIMENSIONS 15

Figure 3-6 DOT 7A TYPE A CONTAINER AND DIMENSIONS 16

Figure 5-1 DRUM CONTAINER AND VOID AREAS 20

Figure 5-2 DRUM CONTAINER EXPOSURE TO POSTULATED CONTINUOUS BURNING FUEL SPILL (Not to Scale) 22

ABBREVIATIONS, ACRONYMS, AND INITIALISMS

A	Area
ALARA	As low as reasonably achievable
ARF	Airborne Release Fraction
ASTM	American Society for Testing and Materials
BTU	British Thermal Unit(s)
cc	cubic centimeter(s)
cm	centimeter(s)
Ci	curies
dia.	diameter
DBE	Design Basis Earthquake
DOE	U.S. Department of Energy
FHA	Fire Hazards Analysis
ft	foot or feet
ft^2	square feet
ft^3	cubic feet
g	gram(s)
gpm	gallons per minute
HDPE	high-density polyethylene
HFD	Hanford Fire Department
h, hr	hour(s)
in.	inch(es)
ISA	Interim Safety Analysis
gal	gallon(s)
kg	kilogram(s)
km	kilometer
L	liter
lb	pound(s)
lbf	pounds-feet
m	meter(s)
m^2	square meters
m^3	cubic meter(s)
MCFL	Maximum Credible Fire Loss
mi	mile(s)
min	minute(s)
MJ	megajoules
MPFL	Maximum Possible Fire Loss
mph	miles per hour
NFPA	National Fire Protection Association
RF	release fraction
RLID	Richland Operations Office (RL) Implementing Directive
s	second(s)
sq	square
Westinghouse Hanford	Westinghouse Hanford Company

1.0 INTRODUCTION

This Fire Hazards Analysis (FHA) is intended to assess comprehensively the risk from fire associated with the disposal of low level radioactive mixed waste in trenches within the new lined landfills, provided by Project W-025, designated Trench 31 and 34 of Burial Ground 218-W-5.

Elements within the FHA make recommendations for minimizing risk to workers, the public, and the environment from fire during the course of the operation's activity. Transient flammables and combustibles present that support the operation's activity are considered and included in the analysis.

The FHA analyzes and evaluates Trenches 31 and 34 with respect to existing and proposed conditions to ascertain whether the objectives of DOE Order 5480.7A Fire Protection are met. The graded FHA contains the following elements:

- Description of construction,
- Protection of essential safety class equipment,
- Fire protection features,
- Description of fire hazards,
- Life safety considerations,
- Critical process equipment,
- High value property,
- Damage potential: Maximum Credible Fire Loss (MCFL) and Maximum Possible Fire Loss (MPFL),
- Fire Department/Brigade response,
- Recovery potential,
- Potential for a toxic, biological and/or radiation incident due to a fire,
- Emergency planning,
- Security considerations related to fire protection,
- Natural hazards (earthquake, flood, wind) impact on fire safety, and
- Exposure fire potential, including the potential for fire spread between fire areas.

Recommendations for limiting risk are made in the text of this report and printed in **bold type**. All recommendations are repeated in a list in Section 18.0.

Assumptions and Limitations

Assumptions regarding combustible contents in containers, curie contents in containers, disposal practices, etc. are intended to be representative of actual conditions that exist during actual operations of the trenches. Changes in these conditions such as increasing the maximum curie content, per container, increasing the height of the disposal array, introduction of additional fuels or fuel sources, etc. may require additional analysis to assess whether these changes impact the conclusions and recommendations of this analysis. In accordance with Hanford Site Solid Waste Acceptance Criteria (WHC, 1993a), this FHA assumes that all combustible mixed waste placed within the trenches are in metal or noncombustible containers. The heat transfer analyses referenced and performed in Section 5, Description of Fire Hazards, was performed on drums assuming DOT 17C drum dimensions.

2.0 SUMMARY AND CONCLUSIONS

This document represents the Fire Hazards Analysis for the Low-Level Mixed Waste Trenches 31 and 34. The FHA was developed in accordance with the criteria contained in DOE Order 5480.7A and is intended to address the major fire hazards inherent to the operation of the trenches and to determine the extent of ground contamination that could result from a postulated worst case fire involving burial ground containers filled with combustible low-level mixed waste.

Low level mixed waste being disposed in Trench 31 or 34 is not considered to be a significant fire risk, given the planned timely covering with backfill. There is no plausible ignition source for contaminated waste within the trenches without the introduction of people or equipment. Use of the Wheel Loader in the landfill introduces a low probability ignition and fuel source. Postulated fires resulting from a fuel spill have been analyzed. This analysis has determined that a credible fuel spill could result in the failure of 33 drum containers. Of the 33, nine drums are expected to result in lid loss and the burning of the drum contents.

The fire hazards and associated risks which exist within trenches 31 and 34 are consistent with the loss limitations stipulated by DOE 5480.7A, Fire Protection. The limited number of recommendations provided are in keeping with DOE 5480.7A 's objective and Westinghouse Hanford's commitment to minimize the potential for the occurrence of a fire or related perils.

3.0 DESCRIPTION OF TRENCH CONSTRUCTION AND OPERATION

Low Level Mixed Waste

Low level waste (LLW) is defined in U.S. DOE Order 5820.2A as waste that contains radioactivity and is not classified as high-level waste (HLW), TRU waste, spent nuclear fuel, or by-product material. Test specimens of fissionable material irradiated for research and development only, and not for the production of power or plutonium, may be classified as low-level waste, provided the concentration of transuranic is less than 100 nCi/g (DOE, 1988). Radioactive waste may be classified as LLW, provided the concentration of TRU radionuclides is less than 100 nCi/g of the waste matrix (WHC, 1994d). Low level mixed waste is defined as radioactive waste with hazardous constituents (WHC, 1994h).

Trench Design

Trench 31 and 34 are located in the 200 West Area of the 1,450 sq km (560 sq mi) United States Department of Energy (DOE) Hanford Site, identified in Figure 3-1, just northwest of Dayton Avenue and 23rd Street in the northwest portion of the 200 West Area, Figure 3-2. Trenches 31 and 34 are designed and constructed in accordance with applicable Resource Conservation and Recovery Act (RCRA) to receive low level mixed waste which is placed below grade and covered with backfill material. For the purposes of this analysis, the two trenches are identical. The trench design is illustrated in

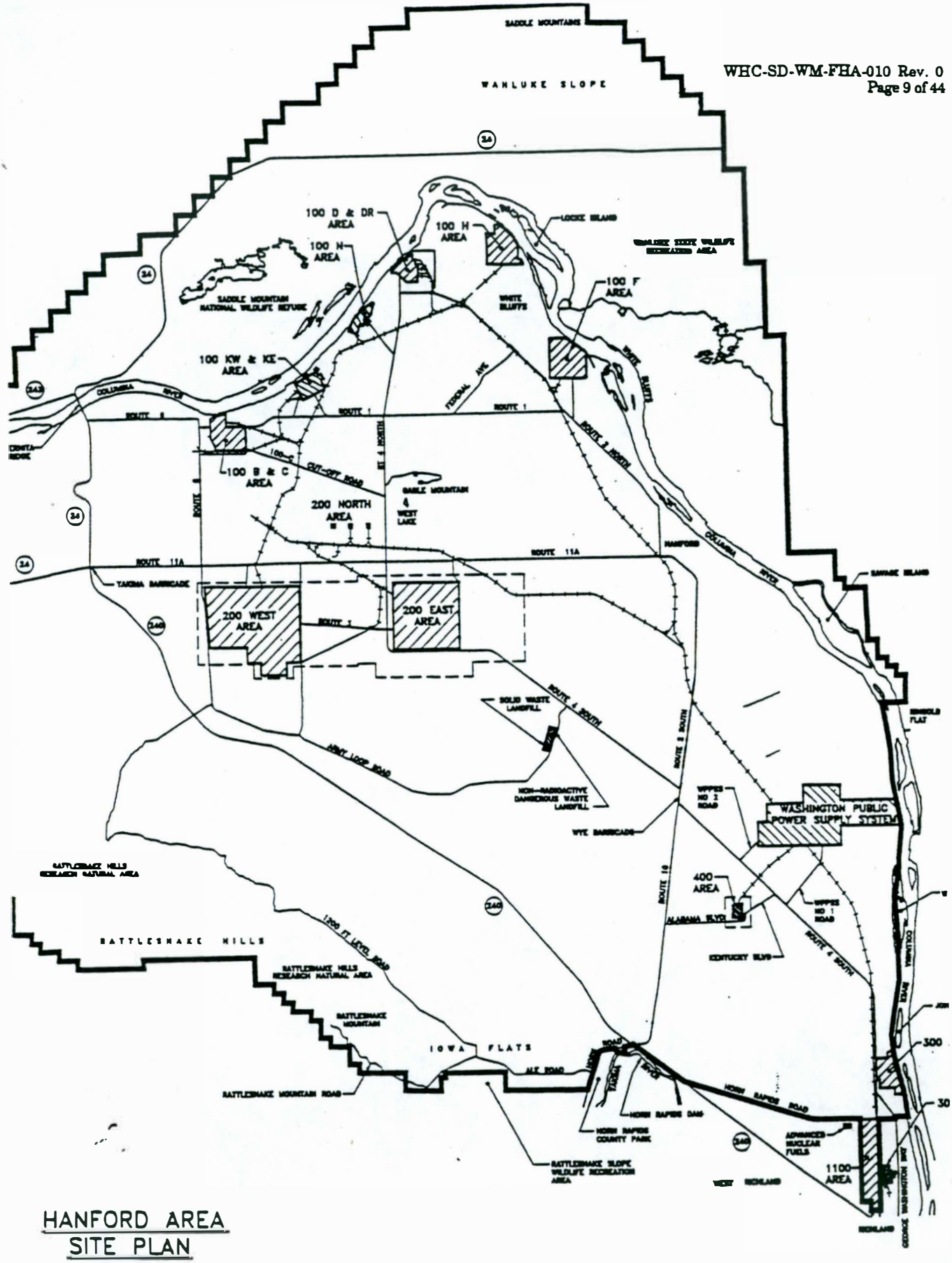

HANFORD AREA
SITE PLAN
SCALE: NONE

SYSTEM DESIGN SERVICES
MAPS CALL 373-2792

Copies Available at 712 Print Shop

FIGURE 3-1 HANFORD 200 WEST AREA LOCATION

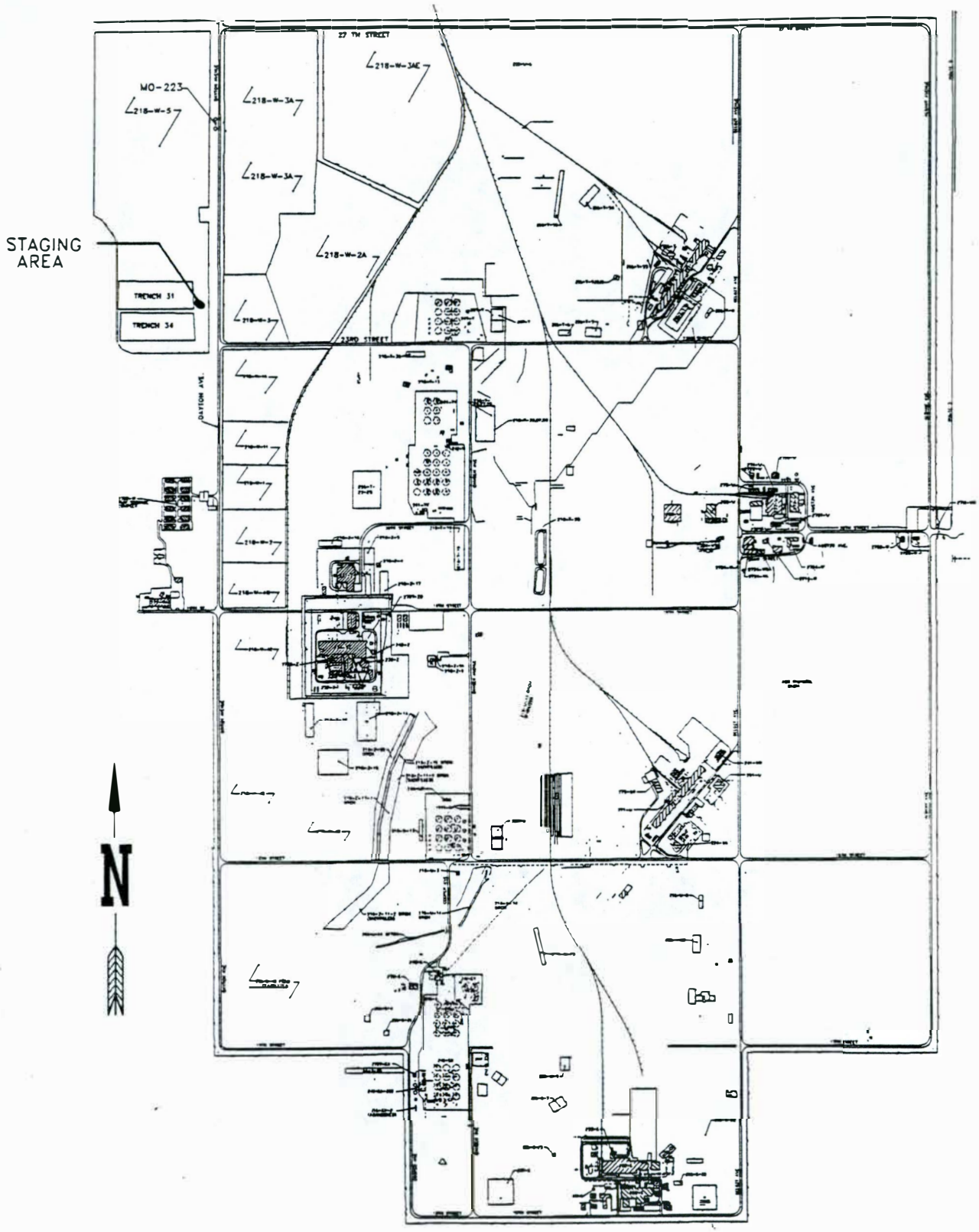

FIGURE 3-2 200 WEST AREA

Figure 3-3. The trenches are approximately 76 m x 30 m (250 ft by 100 ft) at the base and 7.6 to 9.1 m (25 to 30 ft) in depth.

The floor of the trenches are sloped a minimum of two percent to a depressed section at the east end that will house a leachate collection sump. A liner system constructed of a series of compacted bentonite clay admixture layers, geomembranes, drainage gravel, pumps, piping, tank, and controls are designed to prevent leachate from reaching the environment. From top to bottom, the liner system incorporates the following layers identified below and illustrated in Figure 3-4:

- Operations layer - 0.9 m (3 ft) of backfill,
- Primary leachate collection system,
  - Geotextile
  - Drainage gravel
  - Geonet/geotextile geocomposite material
  - Primary High Density Polyethylene (HDPE) Geomembrane
  - Admix of 0.46 m (1.5 ft) of soil and bentonite clay (8 to 10 percent) mixture, and
- Secondary leak detection system,
  - Geotextile
  - Drainage gravel
  - Geonet/geotextile geocomposite material
  - Secondary HDPE geomembrane
  - Admix of 0.9 m (3 ft) of soil and bentonite clay (8 to 10 percent) mixture (WHC, 1994g).

Trench Support Facilities/Equipment:

Support facilities consist of a control building, unloading pad, access ramp, storage area, and leachate management system. The leachate management system includes liners, collection piping, drain field, leachate level sensors, recessed sump pump, and above ground facilities to handle collection and temporary storage of leachate material. A separate FHA has been completed for the Leachate Tank Enclosure (WHC, 1994c).

A dual pump system in the primary leachate collection system is designed to move leachate from the trench collection sump to the above ground leachate tank. Tank capacity is 37,800 L (10,000 gal). The low-capacity 0.0004 m^3/s (7-gal/min) primary pump moves leachate from the sump to the tank. A high-capacity of 0.01 m^3/s (150 gal/min) is expected only to operate during or after periods of heavy precipitation. Additionally, this high capacity pump acts as a backup to the primary pump.

A low-capacity pump in the secondary leak detection system is designed to move any leachate infiltration to the above ground leachate tank. Leachate level sensors are required for monitoring both the primary and secondary collection systems.

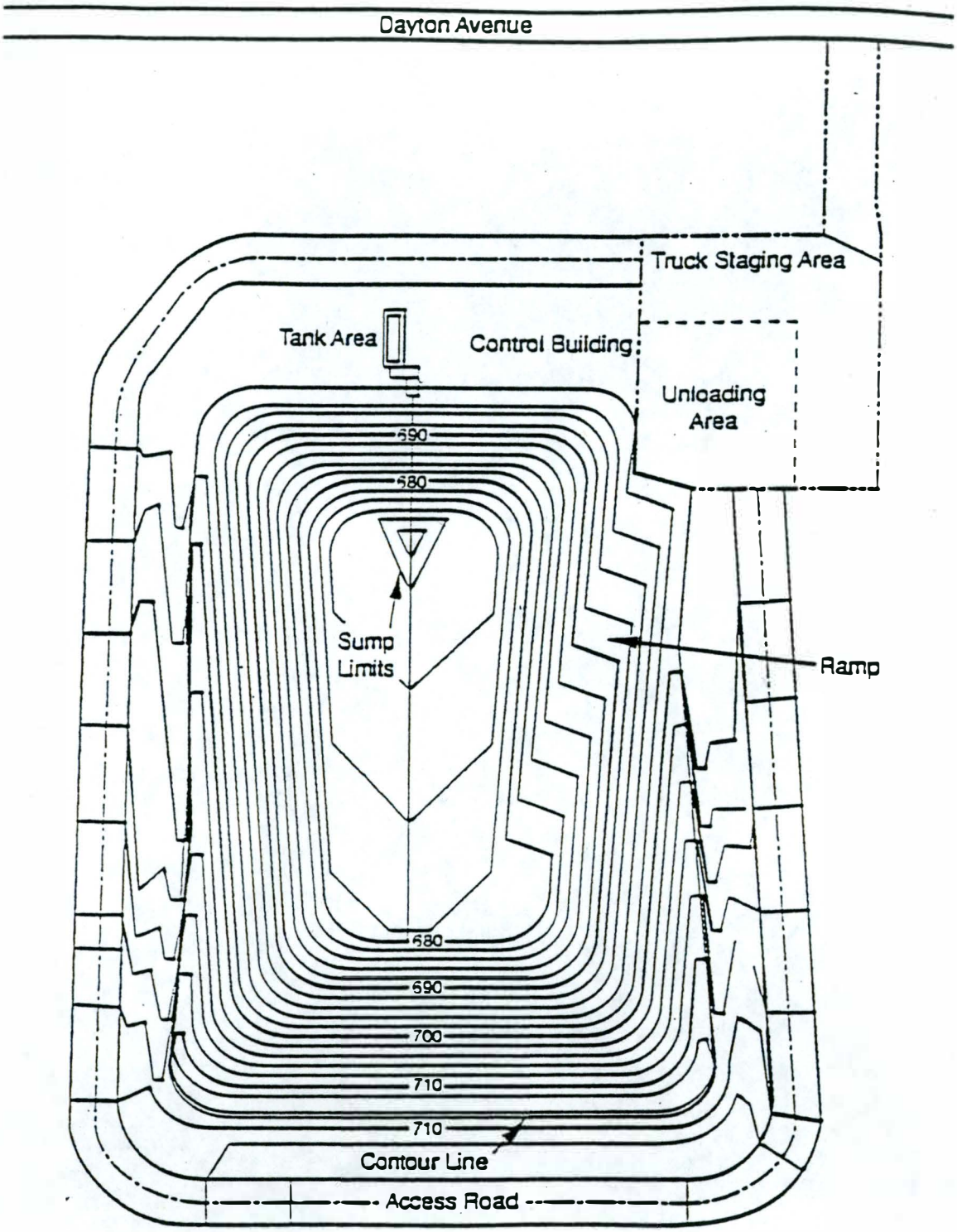

FIGURE 3-3 TRENCH 31 DESIGN

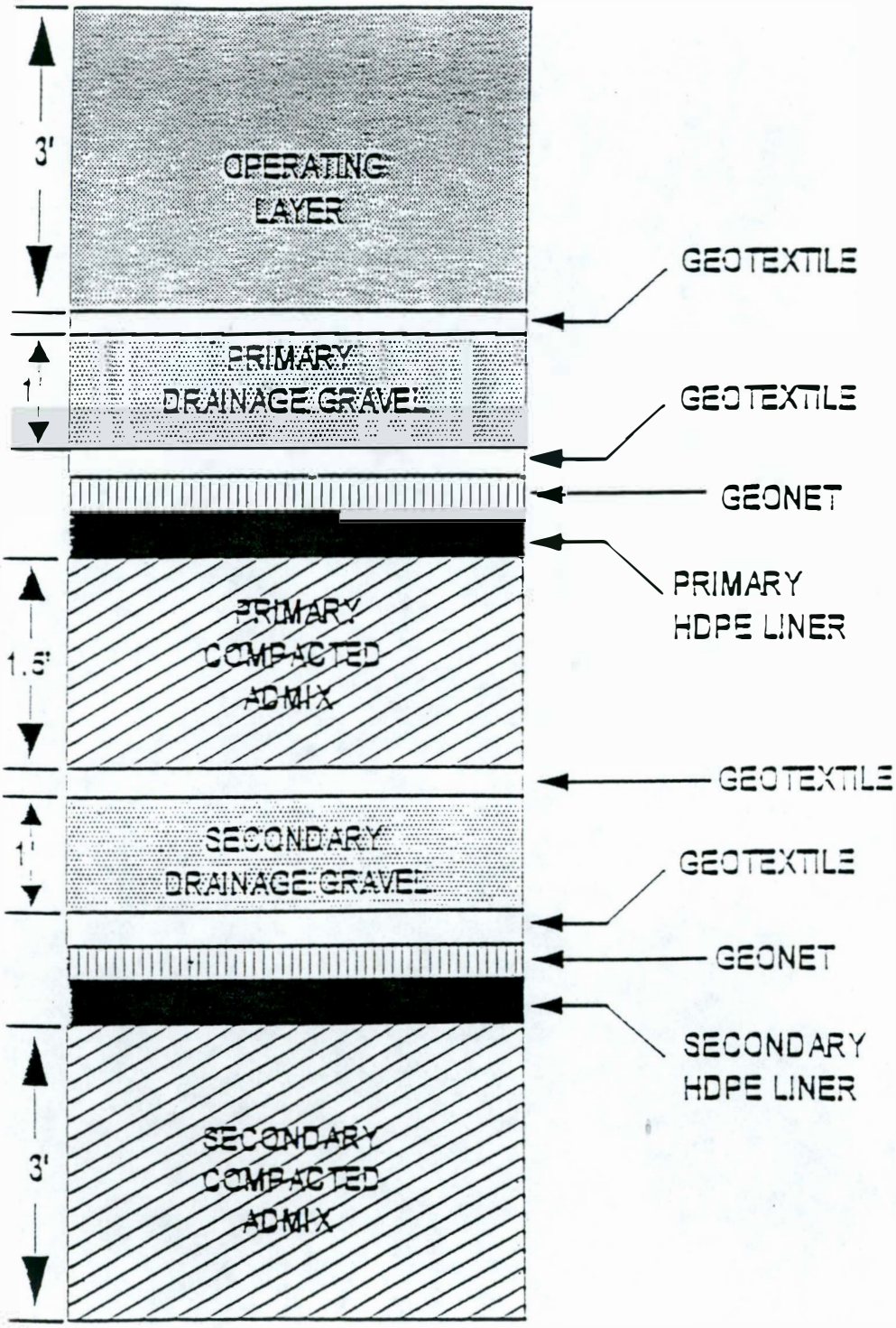

FIGURE 3-4 TRENCH 31, CROSS SECTION - LINER SYSTEM DETAILS

Operations:

Waste (other than bulk waste[1]) will be received and disposed of in containers. The containers are required to be constructed of metal and meet container criteria prescribed (WHC, 1993) as applicable for waste containers, containment, surface dose rate, surface contamination, thermal power, gas generation, interior void space, and nuclear criticality (WHC, 1994d). The containers that are most likely to be used are 55-gal drums similar to the DOT 17C container illustrated in Figure 3-5. Other containers which may be utilized are expected to be similar to the design illustrated in Figure 3-6. Waste may be received on pallets; however, the waste will be removed from the pallets prior to the waste disposal placement in the trench. The pallets will not be disposed of in the trench (WHC, 1994h).

An 8.5-m (28-ft) wide access ramp to the floor of the trench is sloped at eight percent. A transport vehicle will move the waste into the trench to an area designated as the unloading area. Waste will be unloaded by use of a qualified drum lift fixture, qualified forklift, qualified crane and rigging or as otherwise directed by management (WHC, 1994h).

Once off-loaded, waste containers will be placed on the operations layer of the trench starting at the east end of the trench. Material that does not require placement by riggers and crane will be placed using a Caterpillar 936F Wheel Loader or equivalent. The maximum height of the waste will be limited to one layer of containers. Once the horizontal depth of waste container rows approaches the reach of a frontloader with the bucket (approximately a depth of three drum rows), backfill material will be placed on top of and between the waste containers. Backfill material may be clean fill or loose granular bulk waste. A nonflammable/noncombustible fixing agent may be applied to the bulk waste to reduce the spread of waste material. Once the voids between containers have been filled, they will be covered with 0.7 m (2 ft) of clean soil. The maximum number of drums or equivalent drum volumes that may be exposed without 0.7 m (2 ft) soil cover is limited by procedure to 1,400 drums. Once a layer of waste has been placed and covered, the clean soil will be compacted by running the loader over the cover. Additional soil will be added as needed to maintain the 0.7 m (2 ft) depth. As the trench is filled, the ramp will be covered (WHC, 1994h).

---

[1] Bulk waste refers to noncontainerized waste products such as soils, vegetation, building rubble, and other relatively homogeneous materials. Bulk waste will be received in containers but will not remain in the container for disposal.

3.4.7 Tolerances

Diameter over rolling hoops.....23-13/32 in (595 mm) minimum
23-15/32 in (596 mm) maximum

Overall height.....34-3/4 in ± 1/8 in (883 mm ± 3.18 mm)

All other height dimensions .....± 1/8 in (± 3.18 mm)

Center-to-center fitting .....17-1/2 in ± 1/4 in (444 mm ± 6.35 mm)

Convexity of each head .....9/16 in ± 3/16 in (14.3 mm ± 4.76 mm)

All other dimensions.....± 1/16 in (± 1.59 mm)

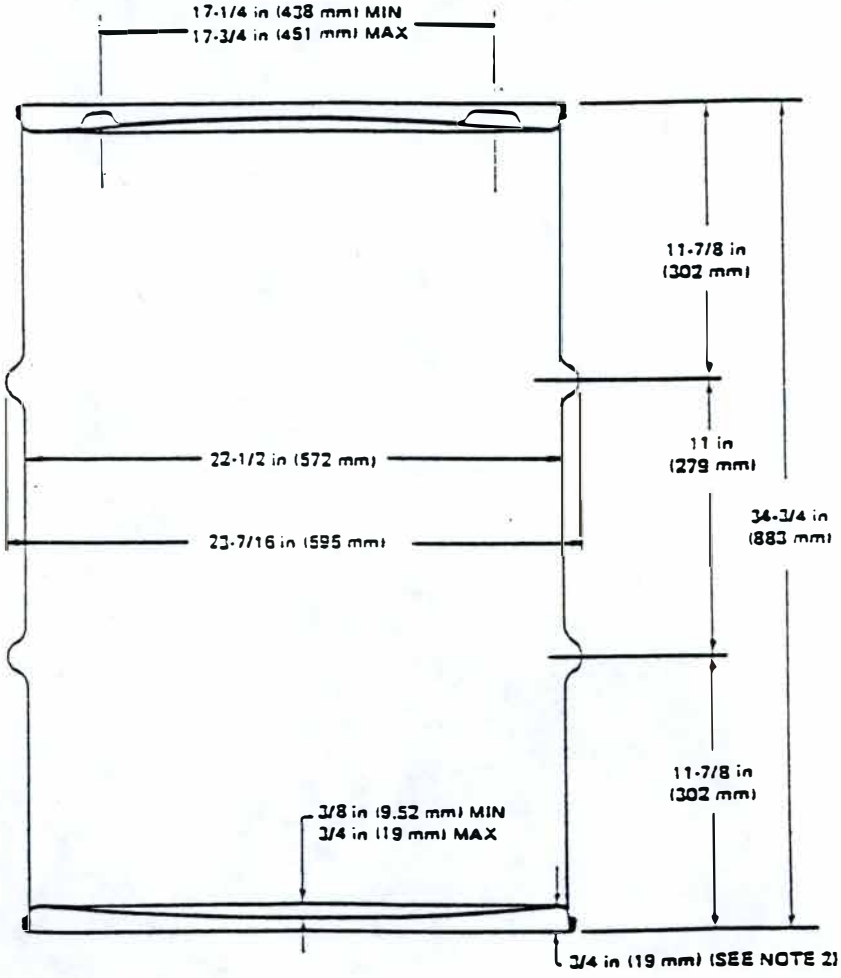

NOTES:
(1) All metric units are rounded, where required, in accordance with the procedure given in 2.2.1.2.
(2) This dimension is applicable to both the top and bottom heads.

FIGURE 3-5 DOT 17C CONTAINER AND DIMENSIONS
(WHC 1994h)

Type	Height		Width		Length		Volume	
	Inner Dimensions ±.01m (±.4in)							
	m	in	m	in	m	in	m^3	ft^3
MB-I	1.02	40	1.30	51	1.30	51	1.72	60
MB-II	1.12	44	1.12	44	2.22	88	2.78	99
MB-III	1.52	60	1.52	60	2.74	108	6.33	225
MB-IV	Buyer Supplied in Purchase Order							

Note: The Seller shall provide proposals for the above containers rated for pay loads of 800, 1200, 1600, and 2000kg/m^3 (50, 75, 100, and 125 lb/ft^3).

Figure A

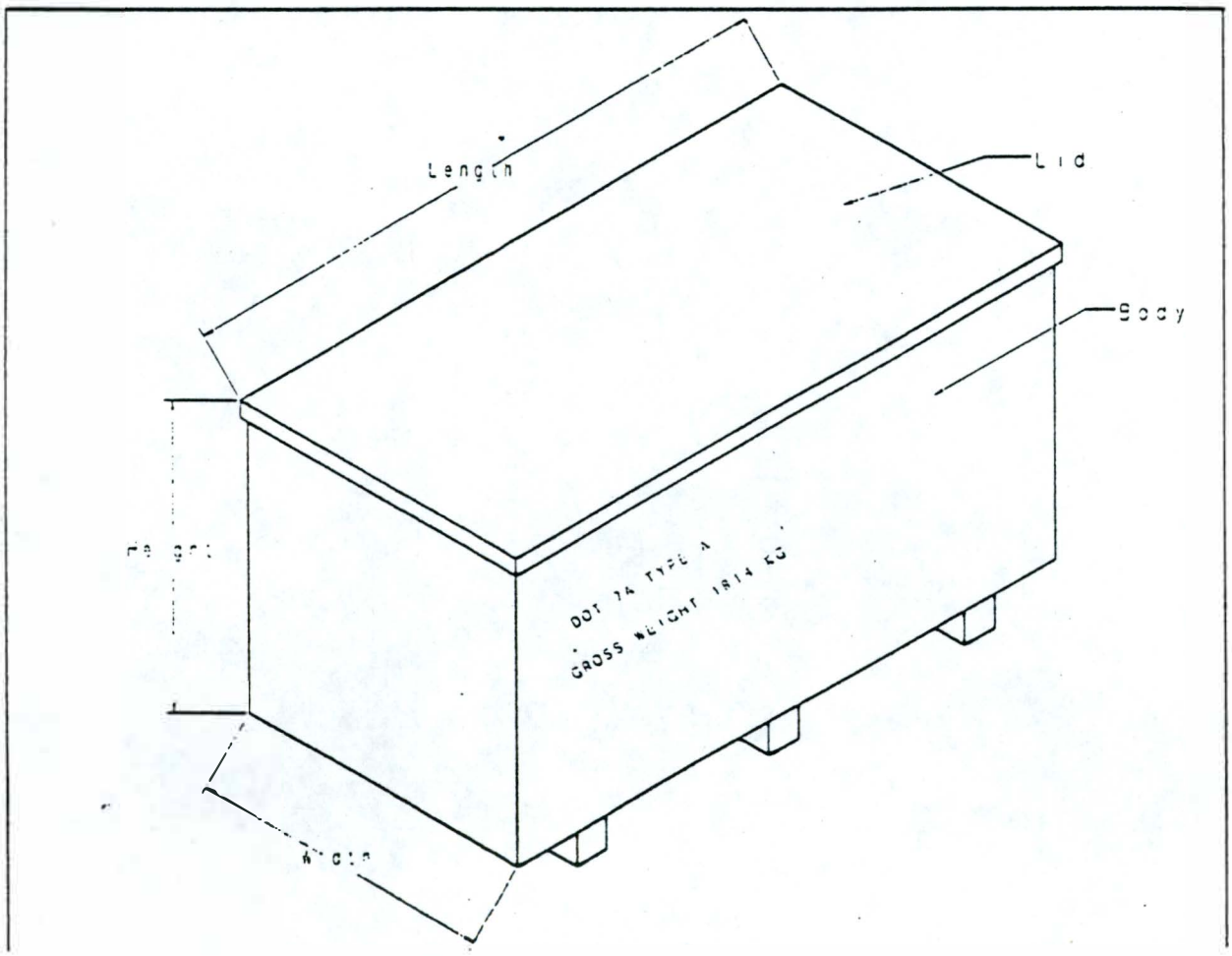

FIGURE 3-6 DOT 7A TYPE A CONTAINER AND DIMENSIONS
(WHC 1994a)

4.0 FIRE PROTECTION FEATURES

There are no fixed fire protection systems for trenches 31 and 34. The operations layer of 0.9 m (3 ft) of backfill will protect the primary, high-density polyethylene (HDPE) liner from fire. There is an additional layer of drainage gravel above the primary HDPE liner providing further separation. As the landfill is filled, waste and backfill will add to the separation between the HDPE liner and the operating surface where the newly arrived waste is being placed.

Trench 31 and 34 have a perimeter access road at the crest of the landfill. If this road is maintained free of vegetation and other combustibles for a minimum width of 9.1 m (30 ft), it will act as a fire break between a range fire and uncovered material and equipment in the trench.

Waste in the trench will be covered with a minimum of two ft of backfill at specific operating points when the waste volume reaches the equivalent of 1,400 drum volumes as discussed in Section 3.0. This procedure will limit the amount of uncovered waste and, thus, minimize the amount of potential fuel that may be exposed to a fire.

A trained, fully staffed fire department is maintained at the Hanford site. Fire department response from the nearest station (200 Area) from time of receipt of alarm is estimated to be eight min. The nearest fire hydrant is located behind one fence approximately 640 m (2,100 ft) to the south of Trench 34, adjacent to Dayton Avenue.

The Wheel Loader will be equipped with a hand held fire extinguisher. This will allow for the possibility of early manual suppression of small fires by operations personnel.

5.0 DESCRIPTION OF FIRE HAZARDS

Fire hazards of concern that exist for Trenches 31 and 34 are defined as conditions or practices related to fire that have the potential to contribute to or directly cause injury, illness, on-site or off-site release of radiological and other hazardous material, property damage, or mission impairment. Two potential fire scenarios that may represent fire hazards have been identified. They are:

- A flammable liquids spill in the vicinity of the container disposal array and a subsequent fire. This fire could expose the drum/container array to significant heat.

- The accumulation of tumbleweeds within the trenches and along the edges of the drum/container array. The tumbleweeds are considered a potential fuel source which, if ignited, could expose the drum/container array to significant heat.

The potential fire scenarios are considered to be significant fire hazards if they result in container failure and a subsequent uncontrolled release of radiological or other hazardous material.

The objectives of the fire scenario analysis are to determine:

- Whether the scenarios result in container failure,
- Whether the fire will continue to propagate and involve other containers, and
- Whether the container will result in a release of radiological or other hazardous material.

Methods and calculations used in the analysis are summarized in the sections below and detailed in the Appendix.

5.1 CONTAINER FAILURE CRITERIA

Similar scenarios have been previously analyzed in the FHA for the TRU Trenches (WHC, 1994f). In the referenced FHA, 50-gal drum containers are considered to fail if the drum internal pressure exceeds 20 psig (138 kPa). This criteria for failure is considered reasonable since DOT requirements for 17C drums stipulate that drums must contain a 20 psi overpressure. There are no overpressure requirements for the metal box container 7A Type A being proposed. In the absence of specific failure criteria, 20 psi overpressure is used.

As reported in the referenced FHA, there are two common modes of drum failure that have been observed. Violent lid failure which results in the loss of the drum lid and may also result in the expulsion of the drum contents. This mode of failure exposes and/or may violently expel the contents of the drum. Burning of the combustible contents is expected. The other is lid seal failure. Lid seal failure describes a rupture of the seal without the loss of the lid. In this event gases produced as a result of the heat exposure are vented from the container. However, due to container overpressure, air is not able to enter the drum. Consequently, there is no flaming combustion **within** the container. Ignition of pyrolysis gases has been observed in full scale fire tests of drum containers conducted by Sandia Laboratories (Sandia, 1979) and Lawrence Livermore Laboratories using a flammable liquids exposure fire (Hasegawa, 1993). Based on Lawrence Livermore National Laboratory fire tests of 55-gal metal waste drums for drum waste storage, drums which experienced lid seal failure resulted in a mass loss of approximately 1 kg/drum (Hasegawa, 1993).

It is assumed that metal box failure is subject to the same modes of failure as the drums.

5.2 ACCIDENT ANALYSIS

5.2.1 Fuel Spill

Based on the Trench 31 and 34 operational procedures, placement of containers for disposal may be accomplished by use of a Caterpillar 936F Wheel Loader or equivalent. Backfill operations will most likely be accomplished by a frontloader with a bucket. This analysis assumes that an accidental fire resulting from a fuel spill involving a wheel loader is a credible event. The worst case wheel loader fire is analyzed as a fuel spill and subsequent fire.

The classification of flammable liquid spills and resulting fires fall into one of the following three categories:

- Instantaneous spills in which all of the spill occurs in a very "short time,"
- Continuous spills in which the spill continues at a specified finite rate for a "long time," and
- Quasicontinuous spills where a given volume of liquid is spilled over a given duration of time. This rate of release is finite, but can vary with time.

Although most spills may fall into the third category of quasicontinuous spills, analytical expressions describing such a scenario are not available (SFPE Handbook, 1988). For this analysis, instantaneous spills, continuous spills, and postulated "worst case" spills are considered.

5.2.1.1 Instantaneous Fuel Spill and Fire

For purposes of conservative accident analysis, a volume of 50 gal (189 L) of fuel originating from a vehicle within the trench and occurring at the edge of the container row is postulated to be spilled instantaneously and would serve as the fuel source for an accidental fire. The maximum pool diameter is calculated in the Appendix and is determined to be 12.2 m and cover a maximum theoretical area of 105.68 m^2 assuming no absorption into the soil. The trench floor soil surface is considered to be sufficiently level to assume that the spill spreads the same distance in all directions from the point of spill origin but allows fuel to flow under drums and containers that have not been backfilled. Since backfill operations occur after the drum/containers reach three rows in depth, it is assumed that three rows of drums are exposed at the time of the spill. Drums which may be covered with soil/backfill material at the time of the spill are assumed not to have sufficient void area to allow for fuel spread within covered areas.

Determine Number of Container Failures

The containers are assumed to be stored one high, i.e. no stacking. As assumed in the referenced FHA and illustrated in Figure 5-1, each drum container and void space is assumed to encompass an area of 0.37 m^2 (0.61 m by 0.61 m). Since the spill occurs at the edge of the container row, only half of the theoretical fuel spill area will potentially involve containers. Since the container rows are only three deep, the spill would be limited to a depth of three containers or 1.83 m. If it is assumed that the spill will not extend beyond its maximum theoretical diameter, the maximum number of drum containers that could be involved would be 60.

Container failure is assumed if a 20 psi container overpressure is reached. The referenced analysis has determined that the calculated energy input for failure is 19.4 MJ. For the drum configuration described, this equates to a fire which burns 0.95 kg of kerosene per drum **and** burns for at least three min (WHC, 1994f). Based on the theoretical pool diameter of 12.2 m, the mass of fuel available to each drum is determined below:

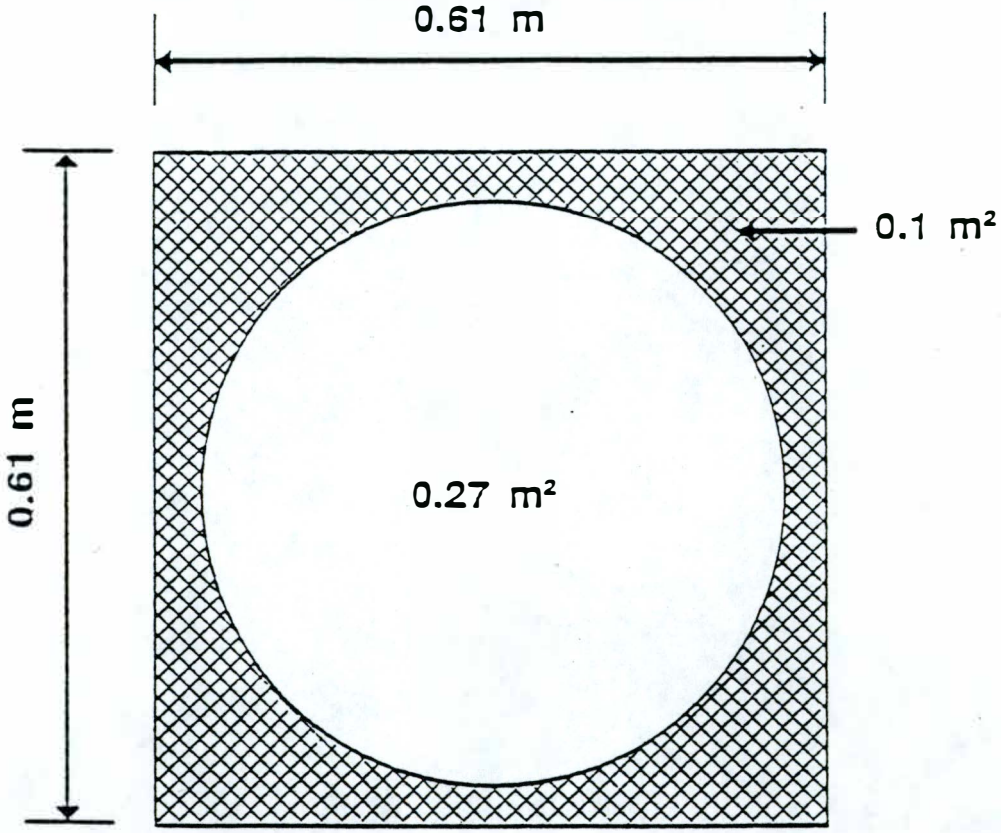

FIGURE 5-1 DRUM CONTAINER AND VOID AREAS

(WHC 1994f)

Theoretical pool diameter:	12.2 m (40 ft)
Theoretical pool area:	116.9 m^2 (1258.3 ft^2)
Area of drums involved:	1/2(116.9) = 58.45 m^2
Volume of fuel spilled:	189.27 L (50 gal) ≈ 155 kg (for diesel/kerosene)
Density of fuel per area:	155 kg/116.9 m^2 = 1.33 kg/m^2

For a drum and void area of dimensions 0.61 m by 0.61 m (0.37 m^2), this equates to a fuel/drum ratio of 0.49 kg/drum. This is below the ratio of 0.95 kg/drum needed for container failure. Therefore, under conditions of an instantaneous fuel spill and subsequent fire, it is concluded that the containers are not expected to fail.

5.2.1.2 Continuous Spill and Fire

A more credible exposure scenario is a localized fuel spill and fire initiated from a fuel tank leak or a ruptured fuel line which results in a release of 50 gal (189.27 L) of fuel at a specified rate for a fixed time. In the case of a continuous burning spill, the liquid will spread and increase the burning area until the total burning rate is equal to the spill rate. It is assumed that the burning rate is constant and that the mass balance is maintained within the pool; therefore, the loss of liquid due to percolation through the soil is not included. For most hydrocarbons these terms tend to be small compared to the burning rate (SFPE Handbook, 1988).

A fuel spill rate of 10 gal/min (37.85 L/min) has been arbitrarily selected to represent a spill resulting from a fuel tank or fuel line rupture. It should be noted that spill rates less than 10 gal/min result in pool fires of smaller areas. The condition is given by the following equation:

$$D_{eq} = 2\left[V'_L / \pi y'\right]^{1/2}$$

Where: D_{eq} = steady state equilibrium diameter of the pool, m
V'_L = liquid spill rate, m^3/s (assume 6.175 E-04 m^3/s)
y' = liquid burning rate, m/s (0.000067 m^3/s) (SFPE Handbook, 1988)

Solving,
D_{eq} = 3.4 m (11.15 ft).

As in the instantaneous fuel spill, the continuous burning fuel spill is assumed to occur at the edge of the container row, and, thus, only half of the theoretical fuel spill area is postulated to potentially involve containers. The trench floor soil surface is considered to be sufficiently level to assume that the spill spreads the same distance in all directions from the point of spill origin but allows fuel to flow under drums and containers that have not been backfilled. Since backfill operations occur after the drum/containers reach three rows in depth, it is assumed that three rows of drums are exposed at the time of the spill. Drums which may be covered with soil/backfill material at the time of the spill are assumed to not have sufficient void area to allow for fuel spread within covered areas. The maximum drums to be involved is determined below and illustrated in Figure 5-2.

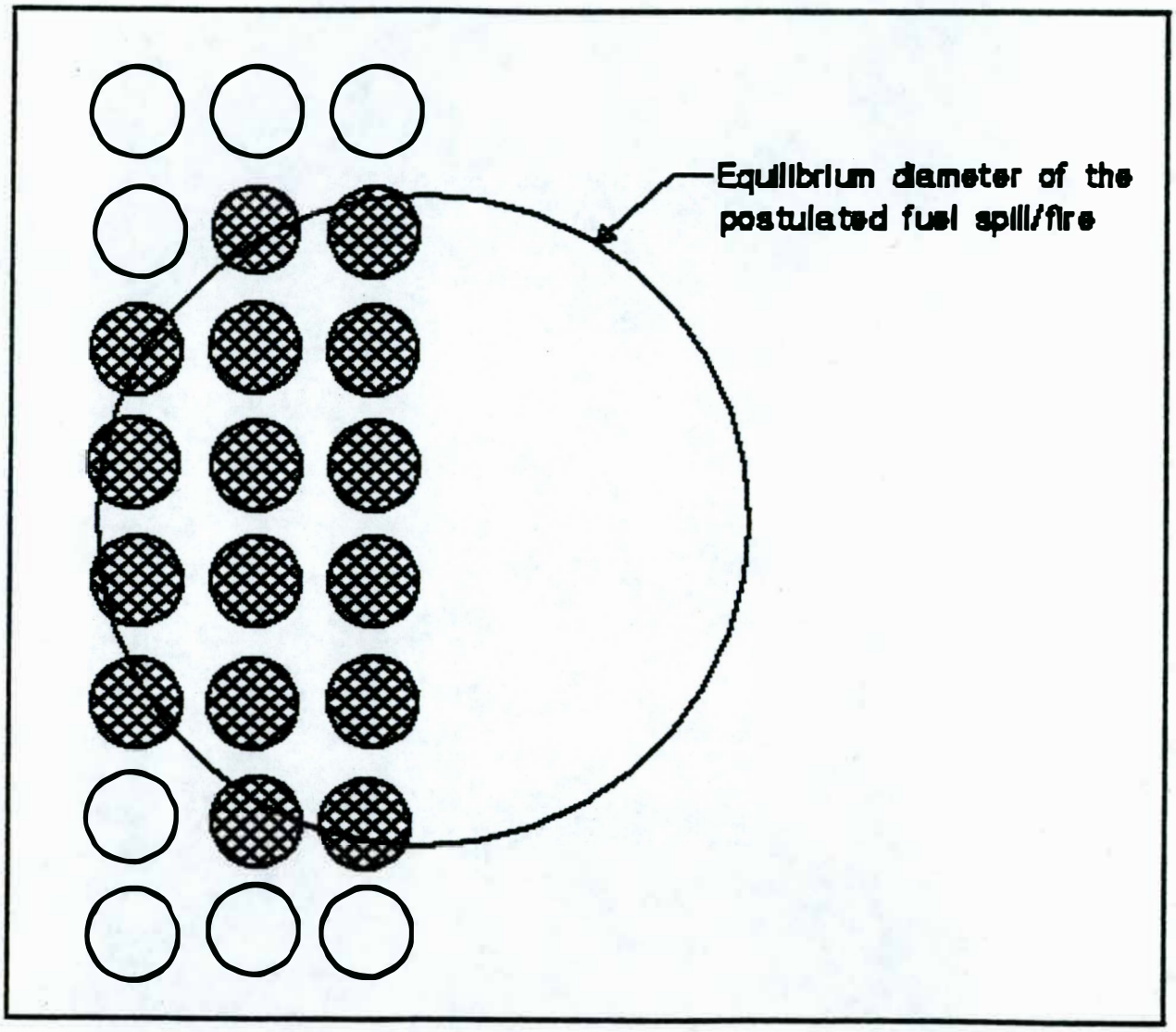

FIGURE 5-2
DRUM CONTAINER EXPOSURE TO POSTULATED CONTINUOUS BURNING FUEL SPILL
(NOT TO SCALE)

Steady-state pool diameter:	3.4 m (11.15 ft)
Theoretical pool area:	9.2 m^2 (99.1 ft^2)
Maximum Area of drums that could be involved:	4.6 m^2
Number of drums involved:	16
Volume of fuel spilled:	118.27 L (50 gal) ≈ 155 kg (for diesel/kerosene)
Density of fuel per area:	155 kg/9.2 m^2 = 16.8 kg/m^2

For a drum and void area of dimensions 0.61 m x 0.61 m (0.3721 m^2), this equates to fuel/drum ratio of 6.3 kg/drum. This is well above the ratio of 0.95 kg/drum needed for container failure. Therefore, under conditions of a continuous fuel spill and subsequent fire, it is concluded that all exposed containers are expected to fail.

Determine Type of Container Failure

As stated earlier, there are two common modes of drum failure that have been observed. Violent lid failure which results in the loss of the drum lid and may also result in the expulsion of the drum contents. The other is lid seal failure. Lid seal failure describes a rupture of the seal without the loss of the lid. The referenced FHA (WHC 1994f) cites fire test results of Hasegawa and Hunter that show only 15 percent of the drum lids were actually removed from the drum due to lid venting and defines the probability (p) that the drums will fail with lid loss as 0.26. Thus, for the 16 drums involved in the continuous spill and subsequent pool fire, four are expected to experience lid loss and burn.

5.2.1.3. Postulated Worst Case Fuel Spill and Fire

The previous scenario assumes a constant burn rate over the entire spill area. Since most of this area is actually covered by drums, the number of exposed drums subject to a fuel/drum ratio resulting in container failure in the above scenario may not be conservative. Therefore, a worst case exposure scenario may involve a localized fuel spill and fire which results in a release of 50 gal of fuel such that the fuel/drum ratio is equal to greater to the ratio determined for container failure, i.e. 0.95 kg/drum, **and** results in a fire which burns for at least three min.

From calculations detailed in the Appendix, a fuel/drum density of exactly 0.95kg/drum equates to a pool fire area of 60.78 m^2 and a pool fire dia. of 8.79 m. As in the previous scenarios, only half of the pool area is assumed to expose the drum inventory. The scenario results in an exposure of 82 drums. The burn time for this fire is calculated to be just over one min, much less than the three-min-burn time necessary to assume container failure. Thus, failure of the 82 drums during this fire is not considered a credible event.

A possible worst case credible fire can be determined by estimating the maximum burn area associated with a pool fire that burns for exactly three min (180 s) and then determining the theoretical number of drums that could be exposed. As in the previous scenarios, the calculations (detailed in the Appendix) assume that only half of the pool area exposes the drum inventory, resulting in a fire with a sufficient fuel drum density (2.32 kg/drum) to result in failure of 33 drums. Using the probability for lid loss of 0.26, nine drums are expected to experience lid loss and have the combustible contents burn.

The remaining 24 drums are expected to experience a mass loss of 1 kg due to the evolution of pyrolysis gases (and subsequent burning outside the container).

Determine Extent of Fire Propagation

Backfilled containers

Containers which have already been backfilled are assumed to be invulnerable to fire propagation. This is due to the backfill limiting the air available for combustion as well as the insulating value that would limit or prevent the containers from being exposed to the heat from the fire and thus prevent or greatly limit the amount of energy transferred from the fire to the containers.

Containers adjacent to the pool fire

In order for the fire to propagate beyond the area of the pool fire, sufficient radiant heat must be transferred from fires involving drum contents to adjoining drums to result in violent lid seal failure. The referenced analysis cites a drum survey by Joyce that documented the average combustible load in a drum of 26 kg (WHC, 1994f). The combustible load of the 95th percentile drum was determined to be 46 kg. The referenced analysis also cites an average heat of combustion of 30 MJ/kg for combustible contents of mixed cellulosic and plastics (15 MJ/kg for cellulosics and 40 MJ/kg for common plastics). Assuming the 95th percentile combustible loading in each drum and a heat release rate of 50 kW, the contents of a burning drum could burn as long as seven hr.

The referenced analysis has fully analyzed the potential for fire to propagate due to radiant heat transfer from burning drums to adjoining drums. The radiant heat transfer from burning drums to adjoining drums can generate overpressures in the range of 5.4 to 7 psig. These overpressures are significantly below the 20 psig criteria for failure. Therefore, fire propagation beyond the area of the pool fire is not expected.

5.2.2 Tumbleweeds Fire

The accumulation of tumbleweeds within the trenches and along the edges of the drum/container array is a known phenomenon. Tumbleweeds, if allowed to accumulate into a drift, are fuel for a fast developing hot fire. They contain a very large surface area and the volume of the fuel package has plenty of entrained combustion air. Tumbleweeds represent a potential fuel source and, if ignited, could expose the uncovered drum/containers. Such a fire could result from a wildland fire or other ignition source. This event has been previously analyzed in the referenced analysis (WHC, 1994f) and determined not to cause failure of exposed drums. Nevertheless, tumbleweeds represent a likely fuel source for a fire within a trench.

5.2.3 Bulk Waste Fire

Bulk waste is noncontainerized waste products such as soils, vegetation, building rubble, and other relatively homogeneous materials. The potential for a bulk waste fire is difficult to assess given the limited waste characterization. Solid Waste Acceptance Criteria indicates that most organic chemicals are excluded from disposal due to liner compatibility requirements (WHC, 1994b). For purposes of this analysis, it is assumed

that the combustible components of bulk waste are the vegetative debris. This type of combustible may be easily ignitible, but in a fire condition is expected to burn in a manner similar to the tumbleweeds fire. It is expected that a bulk waste fire will lack sufficient energy to cause drum/container failure.

5.2.4 Radiological Release Potential

The available literature reviewed regarding estimating release of radiological material in a fire suggest substantial variation. The Solid Waste Burial Grounds Interim Safety Analysis cites NUREG 1320, *Nuclear Fuel Cycle Facility Accident Analysis Handbook*, and assigns a release fraction of 5.3E-04 to the burning of contaminated combustible solids where the contaminant is powder. The methodology ~~developed by~~ Himes (WHC, 1994b) for estimating ~~ground~~ contamination by a postulated fire in a facility containing radioactive material expresses the release fraction as a function of gravitational drift velocity and is presented below:

$F = 5.0E\text{-}02$, where F = Release Fractions
V_g = Gravitational drift velocity

The author indicates that release fractions between 1.0E-04 and 5.0E-02, where the upward forced convection is 0.01 m/s and 1.0 m/s, respectively, fit the data reasonably well. The data refer to actual fractional release experiments performed by Mishima and Schwendiman and documented in DOE-HDBK-3010-YR (DOE, 1994). The DOE Handbook, *Airborne Release Fractions / Rates and Respirable Fractions For Nonreactor Nuclear Facilities*, suggests a bounding airborne release fraction (ARF) of 5E-4 for packaged waste (DOE, 1994). The handbook also cites two sets of experimental data for uncontained, cellulosic waste or largely cellulosic mixed waste which resulted in ARFs ranging from 7E-5 to 1E-2. It states that the radionuclides were freshly applied and emphasized the goal of maximizing release. It also states the values may be "very conservative for most, if not all applications". Container failures which result in lid loss are likely to expel some of their combustible contents which are expected to burn. Thus, for purposes of assigning an ARF, the resulting mixed waste is categorized as uncontained cellulosic waste and assigned an ARF of 1E-2.

The referenced analysis assumes that for a heat release rate of 50 kW, the contents of a burning drum could burn as long as seven hr (WHC, 1994f). For purposes of estimating radionuclide release, it is assumed that the fire involves 100 percent of the curie content of all of the containers which experience lid loss and 10 percent of the curie content of the containers which experience lid seal failure.

The postulated release is based on the maximum permissible radionuclide concentration limit for Cobalt 60 (^{60}Co) of 7.7E+01 Ci/m^3 (WHC, 1994d). For a 55-gal drum with a volume of 0.208 m^3 (7.35 ft^3), this results in a maximum radionuclide content of 16.02 Ci. The estimated radiological release (ERR) is given by the following:

ERR = Radionuclide concentration (Ci/m^3) x Container Volume (m^3) x No. of Containers x RF

Solving for the worst case fuel spill and fire:

$$ERR = (7.7E+01\ Ci/m^3) \times (0.208\ m^3) \times (9) \times (0.01) + (7.7E+01\ Ci/m^3) \times (0.208\ m^3 \times 0.1) \times (24) \times (0.01)$$

$$ERR = 1.82\ Ci$$

The extent of ground contamination resulting from this release is discussed in Section 10, Damage Potential.

5.3 RECOMMENDATIONS

The following recommendations are consistent with WHC-CM-4-41 requirements regarding control of combustibles in nuclear facilities and in limiting the potential for any type of fire within the trenches (WHC, 1992). They are presented below:

Written procedures shall require the Wheel Loader operator to have current training in the following areas:

- **Use of this type of heavy off-road equipment,**
- **Use of hand-held fire extinguishers, and**
- **Response in the event of a fire (Rec. 5-1).**

Written procedures shall require the Wheel Loader to be normally parked, when not in use, at least 9.1 m (30 ft) from any exposed waste. This will minimize the potential for a fuel spill and/or fire involving the Wheel Loader becoming an exposure fire hazard to uncovered waste (Rec. 5-2).

Written procedures shall require all attachment changing done to the Wheel Loader to be performed at least 9.1 m (30 ft) from any uncovered waste. This will minimize the potential for a fuel spill and/or fire involving the Wheel Loader becoming an exposure fire hazard to uncovered waste (Rec. 5-3).

A written procedure for refueling the Wheel Loader should be drafted. The procedure shall follow the Wheel Loader manufacturer instructions for refueling. The procedure shall also stipulate that refueling of the Wheel Loader be performed at least 18.3 m (60 ft) from any uncovered waste and any refuelling tank greater than 416.4 l (110 gal.) shall not enter the trench during refueling operations. This will minimize the potential for a fuel spill and/or fire involving the Wheel Loader becoming an exposure fire hazard to uncovered waste (Rec. 5-4).

Operational procedures shall ensure that tumbleweeds or any other unplanned transient combustible that enters the trenches shall be removed or covered if there is uncovered waste present. If all waste in the landfill is covered, there is no need to remove or cover the tumbleweeds or other unplanned transient combustibles. This recommendation is in keeping with the Westinghouse Hanford goal (WHC 1992) of keeping transient combustibles as low as reasonably achievable (ALARA) (Rec. 5-5).

6.0 PROTECTION OF ESSENTIAL SAFETY CLASS SYSTEMS

Trench 31 and Trench 34 do not contain any essential safety class systems.

7.0 LIFE SAFETY CONSIDERATIONS

Trench 31 and Trench 34 are open air facility configurations and are not subject to classification by NFPA 101, *Code of Safety to Life from Fire in Buildings and Structures,* does not apply. Egress out of the trenches is normally via the access ramp, but the side slope ratio of 3 to 1 of the sides of the landfills could enable evacuation from the trench in event of a pool or tumbleweeds fire.

8.0 CRITICAL PROCESS EQUIPMENT

Trench 31 and Trench 34 do not contain any critical process equipment.

9.0 HIGH VALUE PROPERTY

High value property is defined as property with worth of $500,000 or more. Trench 31 and Trench 34 do not contain any high value property.

10.0 DAMAGE POTENTIAL

10.1 MAXIMUM CREDIBLE FIRE LOSS (MCFL)

DOE Order 5480.7A defines MCFL as the property damage that would be expected from a fire, assuming that:

- All installed fire protection systems function as designed, and
- The effect of emergency response is omitted except for post-fire actions such as salvage work, shutting down water systems, and restoring operation.

Since Trench 31 and 34 do not have any active fire protection systems, nor is it expected that the Wheel Loader will have automatic fire suppression, the MCFL equals the Maximum Possible Fire Loss (MPFL) determined in Section 10.2.

10.2 MAXIMUM POSSIBLE FIRE LOSS (MPFL)

DOE Order 5480.7A defines MPFL as the value of property, excluding land, within a fire area, unless a Fire Hazards Analysis (FHA) demonstrates a lesser (or greater) loss potential. This assumes the failure of both automatic fire suppression systems and manual fire fighting efforts.

In determining the MPFL, it is necessary to also define what is meant by "fire loss." Per DOE Order 5480.7A, fire loss refers to the dollar cost of restoring damaged

property to its pre-fire condition. In determining loss, the estimated damage to the facility and contents shall include replacement cost, less salvage value. Losses exclude property that is scheduled for demolition and property decommissioned and not carried on books as a value. The loss determination includes the cost of decontamination and cleanup, and the loss of production or program continuity.

For Trenches 31 and 34 all low level mixed waste is assumed to have zero property value. Consequently, the wheel loader is the only property of value that could be damaged as a result of a trench fire. This analysis assumes that the fire loss associated with a trench fire will be comprised of damage incurred to the wheel loader and the decontamination and cleanup costs associated with an uncontrolled release of radiological material.

A method for estimating ground areas contaminated by a postulated fire in a facility containing radioactive material has been developed (WHC, 1994e). It is used to estimate the ground contamination potential from a fire involving the combustible and radiological contents of the containers. The results are highly approximate and can vary by more than an order of magnitude under a given set of conditions (WHC, 1994e). It is important to note that the methodology does not purport to model the worst case contamination area that could occur. Rather, it predicts results based on realistic ~~meteorological~~ conditions. As such, they provide a reasonable means for estimating contaminated ground areas.

The methodology is explained in the previously cited reference. Key method assumptions are identified below:

- Estimation of releases are a function of particle fall velocity and is based on available data from experiments where simulated contaminated waste packages were burned under controlled conditions.

- Estimation of the equilibrium plume height is by calculating total fire heat generation rate and using an established buoyant plume model. This estimated plume height is used as the release height for the large particle dispersion model.

- Meteorological conditions are pasquill F stability[2] with a reference elevation of 10 m and wind speed of 1 m/s.

- The fire's rate of heat release per unit area is assumed to be:

$$Q'/A = 397 \text{ kW/m}^2 \text{ or } 9.48 \text{ E+04 cal/m}^2\text{s } (35 \text{ BTU/ft}^2\text{s})$$

---

2 Pasquill stability classes are used to define meteorological atmospheric conditions and typically are categorized from A to F. For materials with a deposition velocity of zero and release point at or very near GROUND LEVEL, the maximum concentration is always associated with "F" stability (LLNL, 1994). For his formulation, Himes has 'arbitrarily' selected "F" stability, and suggests that other combinations of meteorology conditions could produce somewhat larger contaminated areas, but also indicates that the results are highly approximate estimates and that the source term contributes the greatest uncertainty.

This analysis makes use of calculations developed for a fixed set of meteorology which are approximated by simple functions of fire area (heat release rate). Assumptions and variables utilized in this analysis are:

- The fire area is assumed to be the size of the postulated worst case pool fire: 24.7 m^2,
- The minimum contamination level C is determined from accessible soil concentration ~~limits identified~~ for cobalt 60 (^{60}Co) for the 200W Area,
- The radiological at risk inventory (I) was identified in Section 5.0 as the Estimated Radiological Release and was determined to be 1.82 Ci.

The equation for determining the downwind extent of the contour corresponding to a minimum contamination level C is:

$$x_L = \left(64.9 \times (I/C) \times A_F^{0.8407}\right)^{-1/m}$$

where:

x_L	=	maximum downwind extent
I	=	at risk inventory curies
C	=	minimum contamination level
A_F	=	fire area
m	=	$-(0.02940 \ln(A_F) + 3.248)$

The equation for determining the area of the contour corresponding to the minimum contamination level C is:

$$A_c = 0.0713 \cdot (-m)^{1/2} \cdot x_L^{1.903}$$

Substituting and solving: A_c = 84,570 m^2.

Westinghouse Hanford estimates soil cleanup costs at \$5.49/m^2 (WHC, 1993b). Therefore, cleanup costs for the estimated contaminated area total \$464,263.00. Damage to the loader is postulated to equal the value of the Wheel Loader estimated to be \$150,000. Therefore, the fire loss is estimated to be \$614,263.

It should be noted that a radiological release involving the maximum inventory of strontium 90 was also considered (see Appendix) but was found ~~to be bounded~~ by the release of cobalt 60.

These estimated losses are within the acceptable loss criteria prescribed by DOE 5480.7A for the MPFL. It should be noted that rapid fire suppression by the fire department could further limit the release of radiological material and thereby limit the fire loss attributed to ground area contamination.

11.0 FIRE DEPARTMENT/BRIGADE RESPONSE

The HFD consists of four fire stations covering the 1450 km^2 (560 mi^2) Hanford Site. These stations are strategically located across the site to ensure minimum response time to all facilities. Front-line engines in all stations are aerial device/ pumpers, with additional pumpers for backup. HFD maintains 39 vehicles representing a diversified range of capabilities. Of these, 29 are specifically equipped fire/emergency response apparatus, 24 are first-line apparatus, and five are listed as backup (reserve) apparatus.

The 200 Area Fire Station is the closest to Trench 31 and 34. This station is located midway between 200 West Area and 200 East Area. Estimated response time, from the time the alarm is received at the central dispatch/communications center until the time the first piece of fire apparatus arrives on the scene of an incident northwest of the intersection of Dayton Avenue and 23rd Street, is eight min. This response time assumes the fire fighters are in the 200 Area Fire Station and normal road and traveling conditions exist.

The present scenario for a Hanford Site Fire Emergency Response is to dispatch a single aerial device/pumper from the fire station closest to the incident with a backup aerial device/pumper from the next closest fire station to the incident. This provides a two-engine response. The first engine due constitutes what is termed "Initial Attack Response Capability."

From discussions with HFD representatives, a fire in the trench would most likely be fought with hand held extinguishers or hose streams. Due to potential trench layer instability, lay-in of fire department hand held hose lines (if deemed necessary) would most likly occur from outside the trench.

First response will be for fire unless the initial alarm or call to HFD indicates another emergency. Other responses are for a medical emergency or for a hazardous material emergency.

HFD has an established mutual/automatic aid agreement with the surrounding jurisdictions. The agreement enables (and obligates) the HFD to augment its own fire and emergency medical resources in case of large fires, conflagrations, or other disasters. This agreement, known as the "Tri-Cities Mutual Aid Agreement," has been in existence at least since 1985 and includes the cities of Richland, Kennewick and Pasco and the Fire Protection Districts of Benton County No. 1, Benton County No. 2, Benton County No. 3, Benton County No. 4, Benton County No. 5, Benton County No. 6, Franklin County No. 3 and Walla Walla County No. 5. Participation in the agreement is delivered using existing labor and equipment.

12.0 RECOVERY POTENTIAL

If a fire were to occur in Trench 31 or 34, any debris from the fire may be buried along with other waste in the trenches. Residual hydrocarbons from the Wheel Loader may have to be analyzed for compatibility with the landfill liner.

13.0 POTENTIAL FOR A TOXICOLOGICAL, BIOLOGICAL, AND/OR RADIOLOGICAL INCIDENT DUE TO A FIRE

Low level mixed waste is buried in Trenches 31 and 34 so a hazardous or radiological incident due to a fire is possible. A fire involving waste only is not postulated. An exposure fire would have to be present to cause a hazardous or radiological incident. Precautions in the form of procedures or recommendations in this report are advised to minimize the exposure fire hazard risk to waste. Safeguards to eliminate or minimize an incident due to a fire include:

- Only a limited amount of waste is left uncovered,
- A fire break is maintained between the landfill and the range,
- Tumbleweeds are controlled in the landfill,
- Operations personnel have training to minimize the risk of fire, and
- The Wheel Loader, which is the sole ignition source in the landfill, is only near the waste during operations. For refueling, changing attachments, or when not in use it is a safe distance away from uncovered waste.

Dose impact to the public and onsite workers is addressed in *Solid Waste Burial Grounds Interim Safety Analysis,* WHC-SD-SAR-028, Rev. 0, Section 6.3.1.5.1, "Bulldozer Accident with Ensuing Fire."

14.0 EMERGENCY PLANNING

The Building Emergency Plan for Burial Acceptance and Receiving Trenches (WHC 1994e) was reviewed for this report and no discrepancies were noted. However, from discussions with the Hanford Fire Department (HFD), a reliable means for workers to readily notify the HFD in an emergency should be provided. The Radio Fire Alarm Reporter (RFAR) alarm box enables direct reporting to the HFD and is the preferred means of notification. The following recommendation is offered:

Written procedure shall prescribe that a reliable means for notifying emergency services be available to workers at Trench 31 and 34 (Rec. 14-1)

15.0 SECURITY AND SAFEGUARDS CONSIDERATIONS RELATED TO FIRE PROTECTION

No security or safeguard barriers or procedures were noted that might compromise fire safety for these landfills; therefore, there are no security or safeguard issues related to fire protection for Trench 31 or 34. Classified waste is covered by the end of each shift. This action enhances fire safety.

16.0 NATURAL HAZARDS IMPACT ON FIRE SAFETY

16.1 FLOODS

The 200 West Area is located on a plateau 53 to 69 m (175 to 225 ft) above the highest elevation of the probable maximum flood postulated by the U. S. Army Corp of Engineers. The probable maximum flood in this situation requires severe climatic conditions in combination with a breach of Grand Coulee Dam. This breach scenario for the Grand Coulee Dam is from a hypothetical nuclear attack and is not projected to occur from any known natural event. It would result in a brief duration maximum flow of 227,000 m^3/s (8,000,000 ft^3/s) and flood elevations of 143 to 148 m (469 to 486 ft) in the 100 Areas. The 100 and 300 Areas as well as downstream cities along the Columbia River would be flooded. However, the 200 Area plateau would not be affected. With the 200 Area Fire Station on the 200 Area plateau, there is no postulated flood that would compromise fire safety.

16.2 TORNADOES

Hanford Meteorological Station and the National Severe Storm Forecast Center database list 21 tornadoes within a 161-km (100-mi) radius of the Hanford Site between 1916 and 1982. The recurrence interval cited is one per 146,000 yr. However, at least two tornadoes have been sited within a 161-km (100-mi) radius since 1982. Maximum wind speeds for a design basis tornado used at the site are 145 km/h (90 mi/h). The differential pressure is equivalent to a 0.75 lbf/in^2 ambient pressure drop in three seconds, held for one second and returned to ambient at the same rate.

With the low frequency of tornadoes on the Hanford Site and the robust design and construction of Trench 31 and 34, no additional fire safety precautions are warranted to protect against tornados.

16.3 EARTHQUAKES

The Design Basis Earthquake (DBE) is taken to have a return period of 1,000 yr, which means the annual occurrence is 1.0 E-03. The repository siting group selected an application that gave 0.25 and 0.40 G as suggested preliminary maximum horizontal peak accelerations with 50 percent and 16 percent exceedance levels for use in preliminary design estimates. The Hanford Plant Standards specify a 0.13-G horizontal acceleration for the design basis earthquake for non-reactor structures having a moderate- or low-hazard safety classification.

Near-surface liquefaction is not expected as a result of a lack of saturated surface materials and the grading and compaction techniques that have been used. Landslides have and may continue to occur in the neighboring anticlines, but there is no evidence of this type of activity in the vicinity of Trench 31 and 34.

No additional fire protection measures are needed to mitigate the threat of earthquakes (WHC, 1994g).

17.0 EXPOSURE FIRE POTENTIAL

Range fire is the only postulated exposure fire potential to Trench 31 and 34. Exposure fire potential risk is minimized by:

- **Maintenance of the perimeter road effectively making a 9.1 m (30 ft) minimum fire break at the crest of the trenches (Rec. 17-1),**
- Controlling tumbleweeds and other unwanted transient combustibles in the trench, and
- Limiting the amount of uncovered waste.

18.0 RECOMMENDATIONS

The fire hazards and associated risks which exist within Trenches 31 and 34 are consistent with the loss limitations stipulated by DOE 5480.7A, Fire Protection. The following recommendations are provided in keeping with DOE 5480.7A's objective and Westinghouse Hanford's commitment to minimize the potential for the occurrence of a fire or related perils.

1. Written procedures shall require the Wheel Loader operator to have current training in the following areas:

   - Use of this type of heavy off-road equipment,
   - Use of hand-held fire extinguishers, and
   - Response in the event of a fire. (Rec. 5-1).

2. Written procedures shall require the Wheel Loader to be normally parked, when not in use, at least 9.1 m (30 ft) from any exposed waste. This will minimize the potential for a fuel spill and/or fire involving the Wheel Loader becoming an exposure fire hazard to uncovered waste. (Rec. 5-2).

3. Written procedures shall require all attachment changing to the Wheel Loader to be performed at least 9.1 m (30 ft) from any uncovered waste. This will minimize the potential for the Wheel Loader becoming an exposure fire hazard to uncovered waste (Rec. 5-3).

4. A written procedure for refueling the Wheel Loader should be drafted. The procedure shall follow the Wheel Loader manufacturer instructions for refueling. The procedure shall also stipulate that refueling of the Wheel Loader be performed at least 18.3 m (60 ft) from any uncovered waste and any refuelling tank greater than 416.4 l (110 gal.) shall not enter the trench during refueling operations. This will minimize the potential for a fuel spill and/or fire involving the Wheel Loader becoming an exposure fire hazard to uncovered waste (Rec. 5-4).

5. Tumbleweeds or any other unplanned transient combustible that enters the trenches shall be removed or covered if there is uncovered waste present. If all waste in the landfill is covered, there is no need to remove or cover the tumbleweeds or other unplanned transient combustibles. There shall be a written procedure to remove or cover tumbleweeds or other unwanted transient

combustibles. This recommendation is in keeping with the Westinghouse Hanford goal of keeping transient combustibles as low as reasonably achievable (ALARA) (Rec. 5-5).

6. Written procedure shall prescribe that a reliable means for notifying emergency services be available to workers at Trench 31 and 34 (Rec. 14-1).

7. Maintain the perimeter to effectively make a 9.1 m (30 ft) minimum fire break at the crest of the trenches (Rec. 17-1).

19.0 REFERENCES

DOE Order 5820.2A, *Radioactive Waste Management,* U.S. Department of Energy, Washington, D.C.

DOE Order 5480.7A, *Fire Protection,* U.S. Department of Energy, Washington, D.C.

DOE Order 6431.1A, *General Design Criteria,* U.S. Department of Energy, Washington, D.C.

DOE-HDBK-3010-YR, DOE Handbook, Airborne Release Fractions/Rates and Respirable Fractions For Nonreactor Nuclear Facilities, October, 1994.

Hasagawa, H.K., Stagges, K.J., Doughty, S.M, "Fire Testing of 55 Gallon Metal Waste Drums for Dry Waste Storage," Lawrence Livermore National Laboratory, UCRL-CR-115037, 1993.

Homann, Steven G., HOTSPOT, Health Physics Codes for the PC, March 1994, Lawrence Livermore National Laboratory, University of California, Livermore, California.

NFPA 101 1994, *Code for Safety to Life from Fire and Buildings and Structures,* 1994, National Fire Protection Association, Quincy, Massachusetts.

Sandia Laboratories, "Summary of Research and Development Activities in Support of Waste Acceptance Criteria for WIPP," Sandia Laboratories, Albuquerque, New Mexico, SAND79-1305, 1979.

SFPE Handbook 1988, *Society of Fire Protection Engineers Handbook of Fire Protection Engineering,* 1988, National Fire Protection Association, Quincy, Massachusetts.

WHC 1994a, Container, 7A, Type A, *Metal Box for Shipping and Storage, Low-Level Radioactive Material,* HS-V-P-0046, March 1994, Westinghouse Hanford Company, Richland, Washington.

WHC 1994b, *A Method for Estimating Ground Areas Contaminated by a Postulated Fire in a Facility Containing Radioactive Material*, DAH-8D150-94-010, August 1994, Westinghouse Hanford Company, Richland, Washington.

WHC 1994c, *Fire Hazards Analysis for Leachate Tank Enclosure 200 West Area/218-W-5 Burial Ground*, WHC-SD-WM-FHA-005, Rev. 0, September 1994, Westinghouse Hanford Company, Richland, Washington.

WHC 1994d, *Solid Waste Burial Grounds Interim Safety Analysis*, WHC-SD-WM-SARR-028, Rev. 0, September 1994,Westinghouse Hanford Company, Richland, Washington.

WHC 1994e, *Building Emergency Plan for Burial Acceptance and Receiving Trenches,* WHC-IP-0263-BART, Draft September 15, 1994, Westinghouse Hanford Company, Richland, Washington.

WHC 1994f, *Fire Hazards Analysis for PUTDR and TRU Trenches in the Solid Waste Burial Ground*, WHC-SD-WM-FHA-009, Rev. 0, December 1994, Westinghouse Hanford Company, Richland, Washington.

WHC 1994h, *Solid Waste Plant Operating Procedure,* SW-000-171, December 29, 1994, Westinghouse Hanford Company, Richland, Washington.

WHC 1994i, *Environmental Compliance*, WHC-CM-7-5 Release 2, Westinghouse Hanford Company, Richland, Washington.

WHC 1993, *Solid Waste Acceptance Criteria*, WHC-EP-0063, November 1993, Westinghouse Hanford Company, Richland, Washington.

WHC 1993b, Interim Stabilization of Radioactive Surface Contamination Associated With UN-216-E-44, April 1993, Westinghouse Hanford Company, Richland, Washington.

WHC 1992, *Fire Protection Program Manual*, WHC-CM-4-41 Rel. No. 9, Westinghouse Hanford Company, Richland, Washington.

APPENDIX

A

Postulated Fires and Radiological Release Calculations

A. Instantaneous Fuel Spill and Fire - Determine Number of Container Failures

Assumptions

- Postulated fuel spill volume: 50 gal (189 L),
- Spill occurs "instantaneously" at edge of the container row, and
- Spill spreads same distance in all directions.

From SFPE Handbook, the expression for determining the maximum pool diameter is as follows:

Step (1) Determine Area of Pool Spill

$$D_m = 2\,[V_L^3\ g'/y'^2]^{1/8}$$

Where: V_L = Volume spilled (m^3) = 50 gal (0.1893 m^3)
g' = effective acceleration = 1.25 m/s^2
y' = Burning rate = 0.000067 m/s

Substituting and solving: D_m = 12.2 m

Step (2) Determine number of containers involved:

Assumptions

- Area per drum with void space: 0.61 m x 0.61 m = 0.3721 m^2, and
- Only half of the theoretical fuel spill area will involve containers.

from Step 1: D_m = 12.2 m

$$\text{pool area} = \pi\left(D_m^2/4\right) = 116.9\ m^2$$

Area of drums involved = 1/2(116.9) = 58.45 m^2
Volume of fuel spilled = 50 gal (189.27 L) ≈ 155 kg (diesel/kerosene)
Density of fuel/area = 155 kg/116.9 m^2 = 1.33 kg/m^2
Density of fuel/drums = 1.33 kg/m^2 x 0.37 m^2/drum = 0.49 kg/drum

Fuel/drum density ≥ 0.95 kg kerosene/drum is criteria for failure (WHC, 1994f).

Since postulated density of 0.49 kg/drum < 0.95 kg/drum, **it is concluded that drums do not fail.**

B. Continuous Fuel Spill and Subsequent Fire - Determine number of container failures.

Assumptions

- Available volume of fuel is 50 gal (189.27 L),
- Postulate a credible fuel spill/fire scenario,
- Spill rate is 10 gal/min, and

- Spill spreads same distance in all directions.

From SFPE Handbook, expression for determining the steady equilibrium diameter of the pool is as follows:

Step (1) Determine area of pool spill:

$$D_{eq} = 2\,[\,V'_L / \pi\, y']^{0.5}$$

Where: D_{eq} = steady-state equilibrium diameter of the pool,
V'_L = liquid spill rate, m^3/s : 10 gal/min = 6.175 E-04 m^3/s
y' = liquid burn rate, m/s = .000067 m/s (SFPE Handbook)

Substituting and solving:

$$D_{eq} = 3.42 \text{ m}$$

Step (2) Determine number of containers involved

<u>Assumptions</u>

- Area/drum w/void space: 0.37 m^2, and
- Only half of spill area will involve containers.

From Step 1:

$$D_{eq} = 3.42 \text{ m}$$

$$\text{Pool area} = \pi\left(D_{eq}^2 / 4\right) = 9.21 \text{ m}^2$$

Max Area of drums involved: 4.6 m^2
Number of drums involved: ≈ 16 (13 by calculation)
Volume spilled: 155 kg
Density of Fuel/Area = 16.8 kg/m^2
Density of Fuel/drums = 16.8 kg/m^2 x 0.37 m^2/drum = 6.2 kg/drum

Step (3) Determine type of container failure

Since density is > 0.95 kg/drum, all drums assumed to fail.

Probability of lid loss = 0.26 (WHC, 1994c).

16 drums x 0.26 = 4.16 ≈ 4 drums

therefore,

for the 16 drums involved in the fire, four are expected to experience lid loss and burn.

C. Postulated Worst Case Fuel Spill and Subsequent Fire:

Conditions for Failure:

1. Fuel/drum density ≥0.95 kg/drum (fuel density which results in drum failure)

And

2. Burn time ≥ 3 minutes

Step (1) Determine area of pool fire which results in 0.95 kg/drum

Failure density: fuel/area=(0.95 kg/drum) x (1 drum/0.3721 m^2) = 2.55 kg/m^2

Given:

Volume of fuel: 155 kg

Failure density = 2.55 kg/m^2

<u>Area of pool fire determined by:</u>

$(V_{fuel}) / (A_{fire})$ = failure density

$(155\ kg) / (\pi D^2/4) = 2.55\ kg/m^2$

solving:

D= diameter of pool fire = 8.79 m

and

$A_{fire} = 60.78\ m^2$

Step (2) Determine number of containers expected to fail:

Since half of the area of the spill occurs outside the drum inventory, the number of drums that could possibly be exposed is determined by:

No. of drums $= (\frac{1}{2} A_{fire})(1\ drum/0.3721\ m^2)$
$= 81.67$
≈ 82 drums

Step (3) Estimate burn time:

Burn time (t) can be estimated by:

$t = V_{fuel}/(\text{burn area})(\text{burn rate})$

$t = 0.1893\ m^3 / [(82 \times 0.1 m^2) + \frac{1}{2}(A_{fire})] \times (0.000067\ m/s)$

$t = 73\ s = 1.2$ minutes < 3 minutes;

Conclusion:

Therefore, burn time is not sufficient to cause container failure.

Step (4) Determine the number of drums that could fail based on burn time,

As indicated above, burn time and burn area can be estimated by :

$t = V_{fuel}/(\text{burn area})(\text{burn rate})$

For a burn time of 180 seconds, burn area (X) can be expressed as:

$X = 0.1893\ m^3/(180s)\ (0.000067 m/s)$

Solving:

$X = 15.7\ m^2$

For purposes of determining burning area, (X) corresponds to the sum of ½ the fuel spill area and (no. of containers (b) x 0.1 m²) or

$X = 15.7\ m^2 = \frac{1}{2}\ A_{fire} + (b \times 0.1\ m^2)$ [Eqn 1]

The area of the fire, A_{fire}, can be expressed in terms of the maximum number of containers expected to fail by:

$\frac{1}{2}\ A_{fire} = 0.37\ b$ [Eqn 2]

Substituting and Solving Eqn 1 and Eqn 2 simultaneously, below:

$A_{fire} = 0.74\ b$

$15.7 = (1/2) \times (0.74\ b) + 0.1\ b$

$b = 33.4 \approx 33,$

and $A_{fire} = 24.7\ m^2$

For $A_{fire} = 24.7\ m^2$, the fuel/drum density is calculated by:

$(V_{fuel})/(A_{fire}) \times (0.37\ m^2/drum)$

$(155\ kg/24.7\ m^2) \times (0.37\ m^2/drum) = 2.3\ kg/drum \geq 0.95\ kg/drum$

Therefore, all 33 drums are expected to fail.

Given a probability, p, of 0.26 for lid loss, 9 drums are expected to experience lid loss and subsequent burning of the combustible contents.

D. Radiological Release Potential and Ground Area Contamination

Step (1) Determine Estimated Release Potential (ERR) =

- Radionuclide Concentration
- Container Volume
- Number of Containers

ERR = Radionuclide Concentration - Container Volume

- Number of Containers
- Release Fraction

Step (2) Determine Area of Contamination

Utilize methodology developed by Himes.

Method Assumptions

- Estimation of releases, a function of particle fall velocity,
- Estimation of equilibrium plume height, by calculating fire heat generation rate and using an established buoyant plume model,
- Meteorological conditions are pasquill F stability with a reference (10 m) wind speed of 1 m/s, and
- Fire's rate of heat release = Q'/A = 397 kw/m^2 or 9.48 E +04 cal/m^{2}s (35 BTU/ft^{2}s).

Problem Assumptions

- Fire area = worst case fuel pool spill and subsequent fire,
- Minimum level of Contamination, C, is determined from assessable soil concentration limits identified for the 200 West Area (WHC-CM-7-5), and
- ERR is the radiological at risk inventory, I.

From Himes, equation for determining downwind extent of the contour corresponding to a minimum contamination level, C, is:

$$x_L = \left[64.9 \times (I/C) \times A_F^{0.8407} \right]^{1/m}$$

where:
x_L = maximum downwind extent (m)
I = at risk inventory curies
C = minimum contamination level
A_F = fire area = ~~area of pool fire~~
m = $-(0.0294\,[\ln(A_F)] + 3.248)$

From Himes, equation for determining area of the contour corresponding to a minimum contamination level C is:

$$A_C = 0.0724[(-m)^{0.5} (x_L^{1.903})]$$

<u>For cobalt 60:</u>

$A_F = 24.7 m^2$

$m = -[0.0294 \times \ln(24.7) + 3.248] = -3.34$

$I = 1.82$ Ci (from Section 5.2.4)

The accessible soil concentration limits for cobalt 60 = 7.1 E+00 pCi/g (WHC-CM-7-5, Table 6-2)

$C = 7.1$ E+00 pCi/g x 1.6 g/cc x 10^{-12} Ci/pCi x 10^4 c^2/m^2

For depth of 1 cm: C = 1.13 E-07 Ci/m^2

$$x_L = \left[64.9 \times (I/C) \times A_F^{0.8407}\right]^{-1/m}$$

$x_L = 1{,}124$ m

$$A_C = 0.0724[(-m)^{0.5} (x_L^{1.903})]$$

$A_C = 84{,}570\ m^2$

@ 5.49/m^2, clean-up costs are $464,293.

<u>For strontium 90:</u>

$A_F = 24.7\ m^2$

From previous calculation: m = -3.34

I = 356 (from below)

The accessable soil concentration limit for strontium 90 = 2.8 E+03 pCi/g (WHC-CM-7-5, Table 6-2).

C = 2.8 E+03 pCi/g x 1.6 g/cc x 10^{-12} Ci/pCi x 10^4 c^2/m^2

For depth of 1 cm: C = 4.48 x 10^{-5} Ci/m^2

Strontium 90 Category 3 concentration limit = 1.5 E+04 Ci/m³ (WHC, 1994d, Table 6-3).

ERR = 1.5 E+04 Ci/m³ x 0.208 m³ x (9 x .01) + (1.5 E+04 Ci/m³) x (0.208 m³ x 1) x (24 x 0.01)

= 280.8 + 74.88

= 355.7 ≈ 356 Ci (value of I)

$x_L = [64.9 \times I/C \times A_F^{0.8407}]^{-1/m}$

$x_L = 910.56$

$A_C = 0.0724\ [(-m)^{0.5}\ (x_L^{1.903})]$

$A_C = 56{,}646.52$

@ $5.49/m², clean-up costs are ≈ $310,990.

∴ Clean-up costs bounded by cobalt 60 contamination estimate.

DISTRIBUTION SHEET

To	From	Page 1 of 1
W025	W025	Date 4/27/95
Project Title/Work Order		EDT No. 608948
		ECN No. N/A

Name	MSIN	Text With All Attach.	Text Only	Attach./ Appendix Only	EDT/ECN Only
A. K. Crowell, RL	S7-55	X			
V. R. Dronen, BHI	H4-82	X			
H. E. Eaton, BCSR	A2-35	X			
J. K. Erickson, RL	H4-83	X			
L. J. Gaschott, WHC	T4-03	X			
R. J. Giroir, WHC	T4-05	X			
A. P. Goforth, BHI	H6-08	X			
W. H. Hamilton, Jr., WHC	T4-05	X			
P. L. Hapke, WHC	T4-05	X			
R. A. Holten, RL	R3-81	X			
B. J. Howard, ITH	H4-82	X			
J. R. Keene, WHC	S2-42	X			
S. D. Liedle, BHI	H4-84	X			
D. R. Lucas, WHC	G3-15	X			
R. L. Mangum, WHC	T4-03	X			
K. M. McDonald, WHC	T4-03	X			
D. E. McKenny, WHC	N3-10	X			
A. R. Michael, BHI	H4-82	X			
R. B. Morson, CH2	H4-89	X			
T. Nishioka, WHC	T3-01	X			
D. G. Parthree, BHI	H4-87	X			
D. B. Powell, Jr., WHC	T4-03	X			
O. C. Robertson, Jr., RL	A5-19	X			
T. K. Teynor, RL	S7-55	X			
S. R. Turney, BHI	H4-82	X			
R. W. Whitlock, WHC	T4-03	X			
W-025 Project Files, WHC	F3-15	X			
W-025 Project Files, BHI					
OSTI	L8-07	X (2)			
Central Files, WHC (orig ~~11~~ 7)	L8-04	X (2)			

A-6000-135 (01/93) WEF067