CHPRC ADMINISTRATIVE DOCUMENT PROCESSING AND APPROVAL

DOCUMENT TITLE:	**OWNING ORGANIZATION/FACILITY:**
Remedial Design/Remedial Action Work Plan for the K Basins Interim Remedial Action	KBO&PR

Document Number: DOE/RL-2010-63 **Revision/Change Number:**

DOCUMENT TYPE *(Check Applicable)* [x] Plan [ ] Report [ ] Study [ ] Description Document [ ] Other

DOCUMENT ACTION *(Check One)* [ ] New [x] Revision [ ] Cancellation

RESPONSIBLE CONTACTS

	Name	Phone Number
Author:	Brian J Dixon	376-7053
Manager:	Brian J Dixon	376-7053

DOCUMENT CONTROL

JDA 4/20/2016

Is the document intended to be controlled within the Document Management Control System (DMCS)?	[x] Yes	~~[x]~~ No
Does document contain Scientific and Technical Information (STI) intended for public use?	[x] Yes	~~[x]~~ No
Does document contain Controlled Unclassified Information (CUI)?	[ ] Yes	[x] No

DOCUMENT REVISION SUMMARY

NOTE: Provide a brief description or summary of the changes for the document listed.

The work plan is being revised to delete previously work scope and to add an air monitoring plan for the radioactive air emissions from the new sludge transfer annex.

REVIEWERS **Others**

Name *(print)*	Organization
Ray Swenson	CHPRC Legal
Tom Ruane	CHPRC Safeguards
G. Mike Davis	CHPRC KBO&PR
Rudy Guercia	DOE-RL

APPROVAL SIGNATURES

	Print Name	Signature	Date
Author:	Brian J Dixon	[signature]	4/6/16
Responsible Manager:	Brian J Dixon	[signature]	4/6/16
Other:			

RELEASE / ISSUE

DATE:
Apr 20, 2016
HANFORD RELEASE

A-6005-184 (REV 6)

Date Received for Clearance Process (MM/DD/YYYY)
04/05/2016

INFORMATION CLEARANCE FORM

A. Information Category

- [ ] Abstract
- [ ] Journal Article
- [ ] Summary
- [ ] Internet
- [ ] Visual Aid
- [ ] Software
- [ ] Full Paper
- [ ] Report
- [x] Other Plan

B. Document Number DOE/RL-2010-63 Revision 1

C. Title
Remedial Design/Remedial Action Work Plan for the K Basins Interim Remedial Action

D. Proposed Internet Address

E. Required Information (MANDATORY)

1. Is document potentially Classified? (●) No ( ) Yes

Dixon, Brian J Via IDMS Data File att.
Manager Required (Print and Sign)

If Yes _____
ADC Required (Print and Sign) ( ) No ( ) Yes Classified

2. Official Use Only (●) No ( ) Yes Exemption No. ____
3. Export Controlled Information (●) No ( ) Yes OUO Exemption No. 3
4. UCNI (●) No ( ) Yes
5. Applied Technology (●) No ( ) Yes OUO Exemption No. 5
6. Other (Specify) _____

7. Does Information Contain the Following:

a. New or Novel (Patentable) Subject Matter? (●) No ( ) Yes
If "Yes", OUO Exemption No. 3
If "Yes", Disclosure No.: _____

b. Commercial Proprietary Information Received in Confidence, Such as Proprietary and/or Inventions?
(●) No ( ) Yes If "Yes", OUO Exemption No. 4

c. Corporate Privileged Information? (●) No ( ) Yes
If "Yes", OUO Exemption No. 4

d. Government Privileged Information? (●) No ( ) Yes
If "Yes", Exemption No. 5

e. Copyrights? (●) No ( ) Yes If "Yes", Attach Permission.

f. Trademarks? (●) No ( ) Yes If "Yes", Identify in Document.

8. Is Information requiring submission to OSTI? (●) No ( ) Yes
9. Release Level? (●) Public ( ) Limited

F. Complete for a Journal Article

1. Title of Journal

G. Complete for a Presentation

1. Title for Conference or Meeting _____
2. Group Sponsoring _____
3. Date of Conference _____
4. City/State _____
5. Will Information be Published in Proceedings? (●) No ( ) Yes
6. Will Material be Handed Out? (●) No ( ) Yes

H. Information Owner/Author/Requestor
Dixon, Brian J Approved - IDMS Data File att.
(Print and Sign)

Responsible Manager
Dixon, Brian J Approved - Lorin N Clements for BJD IDMS Data File att.
(Print and Sign)

Approval by Direct Report to President (Speech/Articles Only) _____
(Print and Sign)

I. Reviewers

	Yes	Print	Signature	Public Y/N (If N, complete J)
General Counsel	[x]	Swenson, Raymond T	Y - Public, IDMS Data File att.	Y / N
Office of External Affairs	[ ]			Y / N
DOE	[x]	Guercia, Rudolph F	Y - Public, IDMS Data File att.	Y / N
Other DC/Classif.	[x]	Ruane, Tom J	Y - Public, IDMS Data File att.	Y / N
Other	[x]	Davis, G Mike	Y - Public, IDMS Data File att.	Y / N
Other	[ ]			Y / N

J. Comments
After clearance review, please hold document and do not issue until document approval signatures are obtained.

Information Clearance Approval
APPROVED
By Janis D. Aardal at 12:00 pm, Apr 20, 2016

Approved for Public Release; Further Dissemination Unlimited

```
- <workflow name="(JDA) Expedite - DOE/RL-2010-63" id="207210158">
  - <task name="Clearance Process" id="0" date-initiated="20160406T0653"
      performer="Janis D Aardal" performer-id="267960" username="h0090683">
      <comments>ATTN - Due Monday, 4/11/2016 Please approve Rev. 1 of the,
        RD/RAWP for the K Basins Interim Remedial Action, submitted by Brian
        Dixon or public release. Thank you, Janis Aardal Information
        Clearance</comments>
    </task>
    <task name="Add XML" id="1" date-done="20160406T0654" />
    <task name="Expedite - Manager Approval" id="6" date-due="20160408T0653"
      date-done="20160406T0830" performer="Brian J Dixon" performer-
      id="6266109" username="h0014690" disposition="Approve"
      authentication="true" />
    <task name="Expedite - Document Reviewer4" id="19" date-
      due="20160408T0830" date-done="20160406T1018" performer="Mike M Davis"
      performer-id="143783281" username="h7775977" disposition="Public Release"
      authentication="true" />
    <task name="Expedite - Document Reviewer3" id="18" date-
      due="20160408T0830" date-done="20160406T1156" performer="Thomas
      (Tom) J Ruane" performer-id="7146942" username="h0048833"
      disposition="Public Release" authentication="true" />
    <task name="Expedite - Document Reviewer1" id="16" date-
      due="20160408T0830" date-done="20160406T1224" performer="Raymond T
      Swenson" performer-id="141094653" username="h0059138" disposition="Public
      Release" authentication="true" />
  - <task name="Expedite - Document Reviewer2" id="17" date-
      due="20160408T0830" date-done="20160419T1438" performer="Rudolph F
      Guercia" performer-id="585414" username="h0073054" disposition="Public
      Release" authentication="true">
      <comments>none</comments>
    </task>
    <task name="Doc Owner Clearance Review" id="13" date-due="20160420T1443"
      date-done="20160419T1532" performer="Lorin N Clements" performer-
      id="8394908" username="h0105211" disposition="Send On"
      authentication="true" />
    <task name="Milestone 1" id="24" date-done="20160419T1532" />
    <task name="Milestone 2" id="62" date-done="20160419T1532" />
    <task name="Verify Doc Consistency" id="4" date-due="20160420T1532" date-
      done="20160420T0647" performer="Janis D Aardal" performer-id="267960"
      username="h0090683" disposition="Cleared" authentication="true" />
  </workflow>
```

DOE/RL-2010-63
Revision 1

Remedial Design/Remedial Action Work Plan for the K Basins Interim Remedial Action

Removal of K Basins Sludge from the River Corridor to the Central Plateau

Prepared for the U.S. Department of Energy
Assistant Secretary for Environmental Management

Contractor for the U.S. Department of Energy
under Contract DE-AC06-08RL14788

P.O. Box 1600
Richland, Washington 99352

Approved for Public Release;
Further Dissemination Unlimited

DOE/RL-2010-63
Revision 1

Remedial Design/Remedial Action Work Plan for the K Basins Interim Remedial Action

Removal of K Basins Sludge from the River Corridor to the Central Plateau

Document Type: PLAN Program/Project: KBO&PR

W. E. Toebe
CH2M HILL Plateau Remediation Company

B. J. Dixon
CH2M HILL Plateau Remediation Company

Date Published
April 2016

Prepared for the U.S. Department of Energy
Assistant Secretary for Environmental Management

Contractor for the U.S. Department of Energy
under Contract DE-AC06-08RL14788

P.O. Box 1600
Richland, Washington 99352

APPROVED
By Janis D. Aardal at 12:01 pm, Apr 20, 2016

Release Approval Date

Approved for Public Release;
Further Dissemination Unlimited

TRADEMARK DISCLAIMER

Reference herein to any specific commercial product, process, or service by tradename, trademark, manufacturer, or otherwise, does not necessarily constitute or imply its endorsement, recommendation, or favoring by the United States Government or any agency thereof or its contractors or subcontractors.

This report has been reproduced from the best available copy.

Printed in the United States of America

Signature Sheet

Signature sheet for the *Remedial Design/Remedial Action Work Plan for the K Basins Interim Remedial Action: Removal of K Basins Sludge from the River Corridor to the Central Plateau*; at the U.S. Department of Energy Hanford Site. This action is conducted by the U.S. Department of Energy with the approval of the U.S. Environmental Protection Agency.

Mark French

Date 4/18/16

Mark French
Federal Project Director for the River Corridor
U.S. Department of Energy, Richland Operations Office

This page intentionally left blank.

Signature Sheet

Signature sheet for the *Remedial Design/Remedial Action Work Plan for the K Basins Interim Remedial Action: Removal of K Basins Sludge from the River Corridor to the Central Plateau*; at the U.S. Department of Energy Hanford Site. This action is conducted by the U.S. Department of Energy with the approval of the U.S. Environmental Protection Agency.

4-19-16

Rod A. Lobos
Project Manager
U.S. Environmental Protection Agency, Region 10

Date

This page intentionally left blank.

Executive Summary

This remedial design/remedial action work plan (RD/RAWP) describes remedial design and remedial action activities for removal of 105-K West Basin (hereafter referred to as KW Basin) sludge[1] from the River Corridor for transport to the Central Plateau and then for processing. Discussion includes details of the site and its associated contaminants, design and regulatory requirements, remediation tasks, project organization, schedules, and cost estimates. Although this RD/RAWP does not provide a plan for storage and treatment of sludge after transport from the K Basins to other Hanford Site locations, summary information regarding pre-conceptual plans for treatment and packaging is included. The following specific remedial action activities are addressed:

- Transfer of sludge from KW Basin engineered containers into sludge transfer and storage containers (STSCs)
- Transport of STSCs to T Plant

The previous revision (DOE/RL-2010-63, Rev. 0[2]) of this RD/RAWP, in conjunction with associated addenda (Addendum 1, 2, 3A, and 3B) and change notices, described the work that has already been completed (e.g., removal of knockout pot contents and construction of the KW Basin annex). Information about completed work will not be repeated in this current revision.

Remediation is being performed to implement the decision established in EPA/ROD/R10-99/059.[3] The K Basins Interim Action Record of Decision (ROD) Amendment (EPA et al., 2005[4]) modified the remedy for management of sludge and debris.

---

[1] KW Basin sludge includes sludge transferred from the KE Basin to the KW Basin.

[2] DOE/RL-2010-63, 2011, *Remedial Design/Remedial Action Work Plan for the K Basins Interim Remedial Action: Removal of K Basins Sludge from the River Corridor to the Central Plateau; and Removal of Knock Out Pot Contents from the K Basins*, Rev. 0, U.S. Department of Energy, Richland Operations Office, Richland, Washington. Available at: http://pdw.hanford.gov/arpir/index.cfm/viewDoc?accession=0093962.

[2]EPA/ROD/R10-99/059, 1999, *Interim Remedial Action Record of Decision for the 100-KR-2 Operable Unit K Basins, Hanford Site, Benton County, Washington*, U.S. Environmental Protection Agency, Region 10, Seattle, Washington. Available at: http://www.epa.gov/superfund/sites/rods/fulltext/r1099059.pdf.

[4] EPA, Ecology, and DOE, 2005, *Amendment to the Record of Decision for the U.S. Department of Energy Hanford Site 100 K Area K Basins Interim Remedial Action*, U.S. Environmental Protection Agency, Washington State Department of Ecology, and U.S. Department of Energy, Olympia, Washington. Available at: http://pdw.hanford.gov/arpir/index.cfm/viewDoc?accession=DA450992.

This RD/RAWP satisfies two of the elements identified in Tri-Party Agreement[5] Milestone M-016-140 for the submittal of RD/RAWPs for 100-K Area RODs.

[5] Ecology, EPA, and DOE, 1989a, *Hanford Federal Facility Agreement and Consent Order*, as amended, Washington State Department of Ecology, U.S. Environmental Protection Agency, and U.S. Department of Energy, Olympia, Washington. Available at: http://www.hanford.gov/?page=81.

Contents

1 Introduction 1-1

1.1 Purpose 1-1
1.2 Scope 1-2
1.3 Design-Phased Design Approach 1-3
1.4 Site Description and Background 1-3
1.4.1 Physical Setting 1-4
1.4.2 Nature and Extent of Contamination 1-10

2 Basis for Remedial Action 2-1

2.1 Selected Remedy 2-1
2.2 Remedial Action Objectives 2-1
2.3 Remedial Action Goals 2-2
2.4 Applicable or Relevant and Appropriate Requirement Compliance 2-2

3 Design and Processing Bases 3-1

3.1 Engineered Container Retrieval and Transfer System Design Basis 3-1
3.2 Engineered Container Retrieval and Transfer System Processing Basis 3-1
3.3 Engineered Container Retrieval and Transfer System Design Description 3-1
3.3.1 Sludge Transfer 3-4
3.3.2 Solids Settling 3-10
3.3.3 Supernate Decant and Filtration 3-11
3.3.4 Sludge Transport and Storage Container, and Sludge Transport System Cask for Sludge Transportation and Storage 3-11
3.4 Recovery from an Overfilled Sludge Transport and Storage Container 3-17
3.5 Process Drains and Effluent Collection and Disposition 3-18
3.6 Process Off-Gases, Emission Controls, and Emission Monitoring 3-18
3.7 Mock-Up Testing 3-18

4 Engineered Container Retrieval and Transfer System Installation and KW Annex Construction 4-1

5 Engineered Container Retrieval and Transfer System Operation 5-1

5.1 Operational Steps 5-1
5.2 Remote Monitoring Capability 5-1
5.3 Engineered Container Retrieval and Transfer System Process Controls 5-2

6 Remedial Action Management Approach 6-1

6.1 Project Team 6-1
6.2 Change Management 6-1
6.3 Remedial Action Work Tasks 6-2

6.3.1 Access Controls 6-2
6.3.2 Procurement/Testing 6-2
6.3.3 Construction 6-2
6.3.4 Institutional Controls Plan 6-3
6.3.5 Spill Minimization and Response Program 6-3
6.3.6 Reporting 6-3

7 Environmental Management and Controls 7-1

7.1 Air Emissions 7-1
7.1.1 Radiological Air Emissions 7-1
7.1.2 Criteria/Toxic Air Emissions 7-3
7.1.3 Asbestos 7-3
7.2 Waste Management 7-3
7.3 Cultural/Historic/Ecological Resources 7-3
7.4 Leaks, Spills, and Condensate 7-4
7.5 Safety and Health Program 7-4
7.6 Quality Assurance Program 7-5

8 Remedial Action Completion 8-1

8.1 Endpoint Criteria 8-1
8.2 Project Closure Documentation 8-1

9 Milestones, Cost, and Schedule 9-1

10 References 10-1

Appendix

A Air Monitoring Plan ..... A-i

Figures

Figure 1-1. KW Basin Interim Remedial Action Scope 1-5
Figure 1-2. Site Map 1-7
Figure 1-3. KW Basin in the 100-K Area of the Hanford Site, Adjacent to the Columbia River 1-7
Figure 1-4. Aerial View of the 100-K Area in 1966 1-8
Figure 1-5. 100-K Area Water Table Map, March 2014 1-9
Figure 3-1. ECRTS Process Flow Diagram 3-2
Figure 3-2. KW Basin General Arrangement Showing Engineered Containers 3-5
Figure 3-3. KW Basin Section at Center Bay – Looking East 3-6
Figure 3-4. Engineered Container – Side View 3-7
Figure 3-5. Sludge Engineered Container – After Modification (External View) 3-7

Figure 3-6. Xago Hydrolance Retrieval Tool 3-8
Figure 3-7. Ingress/Egress Assembly 3-8
Figure 3-8. KW Annex Equipment Layout (Ground Floor) 3-9
Figure 3-9. KW Annex Equipment Layout (Mezzanine) 3-10
Figure 3-10. Sludge Transport and Storage Container 3-12
Figure 3-11. STS Cask (Internal and External View) 3-14
Figure 3-12. STS Trailer with STS Cask 3-14
Figure 3-13. T Plant Nitrogen Supply Manifold 3-15
Figure 3-14. T Plant Nitrogen Purge Panel 3-15
Figure 3-15. Leveling Frame, Containment System, and Storage Rack with STSCs 3-16
Figure 3-16. Water Addition Assembly 3-17
Figure 3-17. STSC Overfill Recovery Tool 3-17
Figure 3-18. Drain Collection System 3-19
Figure 3-19. ECRTS Process and KW Basin Annex Ventilation Flow Diagram 3-20
Figure 7-1. Ambient Air Monitoring Stations in K Basins Area 7-2

Tables

Table 1-1. Tri-Party Agreement Milestone M-016-140 RD/RAWP Requirements 1-2
Table 1-2. Estimated Volumes of Container and Settler Sludge 1-10
Table 2-1. ARARs for K Basins Sludge Interim Remedial Action 2-3
Table 3-1. STSC Loading Limits and Number Required for Sludge Removal 3-13
Table 5-1. ECRTS Process Parameters 5-2
Table 9-1. Summary of Relevant Tri-Party Agreement Milestones 9-1
Table 9-2. Estimated Cost and Schedule 9-1

This page intentionally left blank.

Terms

ACM	asbestos-containing material
ALARA	as low as reasonably achievable
ARAR	applicable or relevant and appropriate requirement
ASME	American Society of Mechanical Engineers
CERCLA	*Comprehensive Environmental Response, Compensation, and Liability Act of 1980*
CSB	Canister Storage Building
DOE	U.S. Department of Energy
DOE-RL	DOE Richland Operations Office
EC	engineered container
ECRTS	engineered container retrieval and transfer system
EPA	U.S. Environmental Protection Agency
gpm	gallons per minute
HASP	health and safety plan
HEPA	high-efficiency particulate air
IXM	ion-exchange module
KOP	knockout pot
NESHAP	National Emission Standards for Hazardous Air Pollutants (40 CFR 61)
NRC	U.S. Nuclear Regulatory Commission
NTU	nephelometric turbidity unit
OU	operable unit
ORT	overfill recovery tool
P&T	pump and treat
PCB	polychlorinated biphenyl
PNNL	Pacific Northwest National Laboratory
QA	quality assurance
RAO	remedial action objective
RD/RAWP	remedial design/remedial action work plan
RDR	remedial design report
RH-TRU	remote handled transuranic
ROD	record of decision

RWP	radiological work permit
SAP	sampling and analysis plan
SNF	spent nuclear fuel
STP	Sludge Treatment Project
STS	sludge transport system
STSC	sludge transport and storage container
T-BACT	best available control technology for toxics
TPA	Tri-Party Agreement
Tri-Party Agreement	*Hanford Federal Facility Agreement and Consent Order*
TRU	transuranic
XAGO	XAGO retrieval tool
WIPP	Waste Isolation Pilot Plant

1 Introduction

This remedial design/remedial action work plan (RD/RAWP) provides information regarding the 105-K West Basin (hereafter referred to as the KW Basin) and its associated contaminants, design and regulatory requirements, remediation tasks, the project organization, schedules, and cost estimates to remove sludge from the 105-K Basins (hereafter referred to as K Basins). Revision 0 of this RD/RAWP (DOE/RL-2010-63, *Remedial Design/Remedial Action Work Plan for the K Basins Interim Remedial Action: Removal of K Basins Sludge from the River Corridor to the Central Plateau; and Removal of Knock Out Pot Contents from the K Basins*), in conjunction with associated addenda (addendum 1, 2, 3A, and 3B) and change notices, described the work that was completed prior to issuance of this current revision. The completed work included pretreatment and processing of knockout pot (KOP) material, design of the engineered container retrieval and transfer system (ECRTS), and construction of the KW Basin annex building. Current activities include transferring sludge from KW Basin engineered containers (ECs) into sludge transfer and storage containers (STSCs), and transporting the STSCs to T Plant. Treatment and packaging of sludge for disposal at the Waste Isolation Pilot Plant (WIPP) is addressed in DOE/RL-2011-15, *Remedial Design/Remedial Action Work Plan for the Basins Interim Remedial Action: Treatment and Packaging of K Basins Sludge*. Both of these activities are being performed to implement the decision established in EPA/ROD/R10-99/059, *Interim Remedial Action Record of Decision for the 100-KR-2 Operable Unit K Basins, Hanford Site, Benton County, Washington* (hereafter referred to as the K Basins Interim Record of Decision [ROD]); and EPA et al., 2005, *Amendment to the Record of Decision for the U.S. Department of Energy Hanford Site 100-K Area K Basins Interim Remedial Action* (hereafter referred to as the K Basins Interim Action ROD Amendment). Figure 1-1 provides an overview of the interrelationships between the implementing documents for the K Basins interim remedial action.

This RD/RAWP provides the basis for the design and implementation of sludge removal from the KW Basin. This document supersedes DOE/RL-2006-06, *Remedial Design Report and Remedial Action Work Plan for the K Basins Interim Remedial Action: Sludge Treatment and Interim Storage*, and DOE/RL-2006-06.3, *Remedial Design Report for the K Basins Interim Remedial Action: Sludge Treatment and Interim Storage: Phase 3: Sludge Assay and Solidification*.

The design and implementation for sludge treatment and packaging for disposal at the WIPP will be as remote handled transuranic (RH-TRU). In March 2012, the Sludge Treatment Project (STP) issued PRC-STP-00615, *Preliminary Technology Maturation Plan for the K-Basins Sludge Treatment and Packaging Facility*, to support completion of Tri-Party Agreement (TPA) (Ecology et al., 1989a, *Hanford Federal Facility Agreement and Consent Order*) Milestone M-16-171.

1.1 Purpose

This RD/RAWP describes the systems for the selected remedy associated with transferring sludge to the STSCs and transporting the filled STSC to T Plant. These systems will be designed and implemented to meet the relevant remedial action objectives (RAOs) identified in the K Basins Interim Action ROD (EPA/ROD/R10-99/059).

This RD/RAWP satisfies two of the elements identified in TPA (Ecology et al., 1989a) Milestone M-016-140 for the submittal of RD/RAWPs for 100-K Area RODs. Table 1-1 presents a summary of RD/RAWP requirements under this milestone which were completed in March 2011.

Table 1-1. Tri-Party Agreement Milestone M-016-140 RD/RAWP Requirements

Milestone Deliverable	Required Milestone Elements	Document
☐	Complete removal of the KW Basin	DOE/RL-2010-52 (deactivation)
☐		DOE/RL-2010-53 (demolition)
☑	Complete removal of all sludge (includes container and settler tank sludge) from the KW Basin, except knockout pot contents	DOE/RL-2010-63 (this RD/RAWP)
☑	Complete removal of knockout pot contents	DOE/RL-2010-63 (this RD/RAWP)
☐	Complete treatment and packaging of first container of TRU sludge waste certifiable for disposal at WIPP	DOE/RL-2011-15
☐	Complete treatment and packaging of sludge for disposal at WIPP	DOE/RL-2011-15
☐	Begin KW Reactor interim safe storage	DOE/RL-2005-26
☐	Complete KW Reactor interim safe storage	DOE/RL-2005-26
☐	Initiate soil remediation under the KW Basin	DOE/RL-96-17
☐	Complete all interim response actions at the 100-K Area	DOE/RL-96-17

Note: This table is based on the requirements of Ecology et al., 1989a, *Hanford Federal Facility Agreement and Consent* Order (Tri-Party Agreement) Milestone M-016-140, "Submit revised RD/RA Work Plans for 100-K Area RODs as primary documents per HFFACO 11.6 with new proposed milestones…"

References:

DOE/RL-96-17, *Remedial Design Report/Remedial Action Work Plan for the 100 Area*.

DOE/RL-2005-26, *Removal Action Work Plan for 105-KE/105-KW Reactor Facilities and Ancillary Facilities*.

DOE/RL-2010-52, *Remedial Design and Remedial Action Work Plan for the K Basins Interim Remedial Action: 105-K West Basin Deactivation*.

DOE/RL-2010-53, *Remedial Design/Remedial Action Work Plan for the 100 Area Remaining Sites Interim Remedial Action: 105-K West Basin Demolition and Removal*.

DOE/RL-2011-15, *Remedial Design/Remedial Action Work Plan for the K Basins Interim Remedial Action: Treatment and Packaging of K Basins Sludge*.

RD/RAWP = remedial design/remedial action work plan
ROD = record of decision
TRU = transuranic
WIPP = Waste Isolation Pilot Plant

1.2 Scope

This revision of the RD/RAWP discusses the final design and remaining work to be completed. This revision does not provide detailed discussion on the work that has already been completed. Further information regarding work that was previously completed is available in Rev. 0 of this RD/RAWP, change notices, and addenda, which are all available in the Administrative Record.

This RD/RAWP addresses the design and work activities for retrieval and load out of sludge from ECs to STSCs using ECRTS, followed by transport of the STSCs in the sludge transport system (STS) cask to

T Plant for storage as RH-TRU waste prior to treatment and disposal. This work plan will document the modification of the KW Basin fuel transfer system annex, which is also addressed herein.

This RD/RAWP does not address the portion of sludge/debris that will be left in place, which will be removed as part of K Basins demolition after the sludge has been removed to the extent practicable. The remedial design and schedule associated with removal of the remaining sludge/debris are described in DOE/RL-2010-53, *Remedial Design/Remedial Action Work Plan for the 100 Area Remaining Sites Interim Remedial Action: 105-K West Basin Demolition and Removal*.

This RD/RAWP does not address the storage of sludge upon receipt at T Plant; instead, DOE/RL-2011-15, discusses these details in depth. Figure 1-1 shows the activities presented in this RD/RAWP, as well as their relationship to the overall remedial action.

1.3 Design-Phased Design Approach

The remedial design for KW Basin sludge and KOP material removal was developed using a design-phased approach because of the duration and complexity of this remedial action. Remedial design reports (RDRs) were prepared as addenda to Rev. 0 of this RD/RAWP and were submitted to the U.S. Environmental Protection Agency (EPA) for review and approval as the design levels advanced toward 90 percent. The addenda included the following:

- **Addendum 1:** KOP material pretreatment 90 percent RDR (KOP material pretreatment has been completed)
- **Addendum 2:** KOP processing system 60 percent RDR (KOP processing, loading into multi-canister overpacks and transfer to the Canister Storage Building [CSB] in the 200 East Area has been completed)
- **Addendum 3:** ECRTS 90 percent RDR (superseded by Rev. 1 to this RD/RAWP)

1.4 Site Description and Background

The KW Basin is located in the northern part of the U.S. Department of Energy (DOE) Hanford Site in Washington State, adjacent to the Columbia River (Figure 1-2). The KW Basin is located in the 100 Area and received spent nuclear fuel (SNF) from the 105-K East Basin (hereafter referred to as KE Basin) and 105N (N Reactor) Fuel Storage Basin, and from cleanup of the 100 Area burial grounds. The rectangular concrete basin is approximately 38 m (125 ft) long and 20 m (67 ft) wide, and it adjoins the reactor building (Figure 1-3). The basin is filled with approximately 5 m (16 ft) of water to provide radiation shielding for facility workers and minimize the release of radioactive particles to the atmosphere.

All SNF in the KW Basin has been packaged and removed to the 212H CSB. The KW Basin is currently being used to store debris and sludge from the basin floor and pits inside of ECs, as well as segregated settler material. The KW Basin is located inside of the KW Reactor building and holds approximately 4.9 million L (1.3 million gal) of water. The water provides a radiation shield, as well as a thermal sink, for heat generated by the stored material.

The SNF Project supported the Hanford Site cleanup mission by safely washing and removing approximately 2,100 metric tons of SNF from the KE and KW Basins (collectively referred to as the K Basins) and away from the Columbia River. SNF was delivered for storage at the CSB, located in the 200 Areas of the Hanford Site. KOP material was collected during washing and removal of SNF and has been delivered for storage at the CSB.

With completion of the SNF Project, the DOE Richland Operations Office (DOE-RL) and its contractor(s) retrieved the K Basins floor, pit, and settler tank sludge and consolidated this material into ECs placed into the KW Basin (DOE/RL-99-89, *Remedial Design Report and Remedial Action Work Plan for the K Basins Interim Remedial Action*).

Previous actions at the KW Basin in support of the K Basins Interim ROD (EPA/ROD/R10-99/059) include the following:

- Removing the SNF
- Grouting the KW Basin discharge chute
- Containerizing the KW Basin floor and pit sludge
- Receiving and containerizing sludge from the KE Basin
- Partially removing debris
- Retrieving and containerizing sludge from settler tanks
- Sampling and analyzing sludge in ECs
- Performing in-pool characterization of KOP material
- Pretreating KOP material
- Packaging and delivering KOP product material to the CSB
- Vacuuming and containerizing floor and pit sludge

1.4.1 Physical Setting

Background information on the Hanford Site, 100 Area, and KW Basin is included in DOE/RL-2008-46-ADD2, *Integrated 100 Area Remedial Investigation/Feasibility Study Work Plan Addendum 2: 100-KR-1, 100-KR-2, and 100-KR-4 Operable Units*, and the K Basins Interim Action ROD (EPA/ROD/R10-99/059). A brief summary is provided in this RD/RAWP.

The Hanford Site lies in a sediment-filled basin on the Columbia Plateau in southeastern Washington State (Figure 1-2). The 100 Area is located in the northern portion of the Hanford Site, along the southern shore of the Columbia River. Between 1943 and 1963, nine plutonium production reactors were built to produce special nuclear materials for national defense activities. The 100-K Area includes two of these reactors (KE and KW Reactors) and covers an area of approximately 3.1 km^2 (1.2 mi^2) (Figure 1-4).

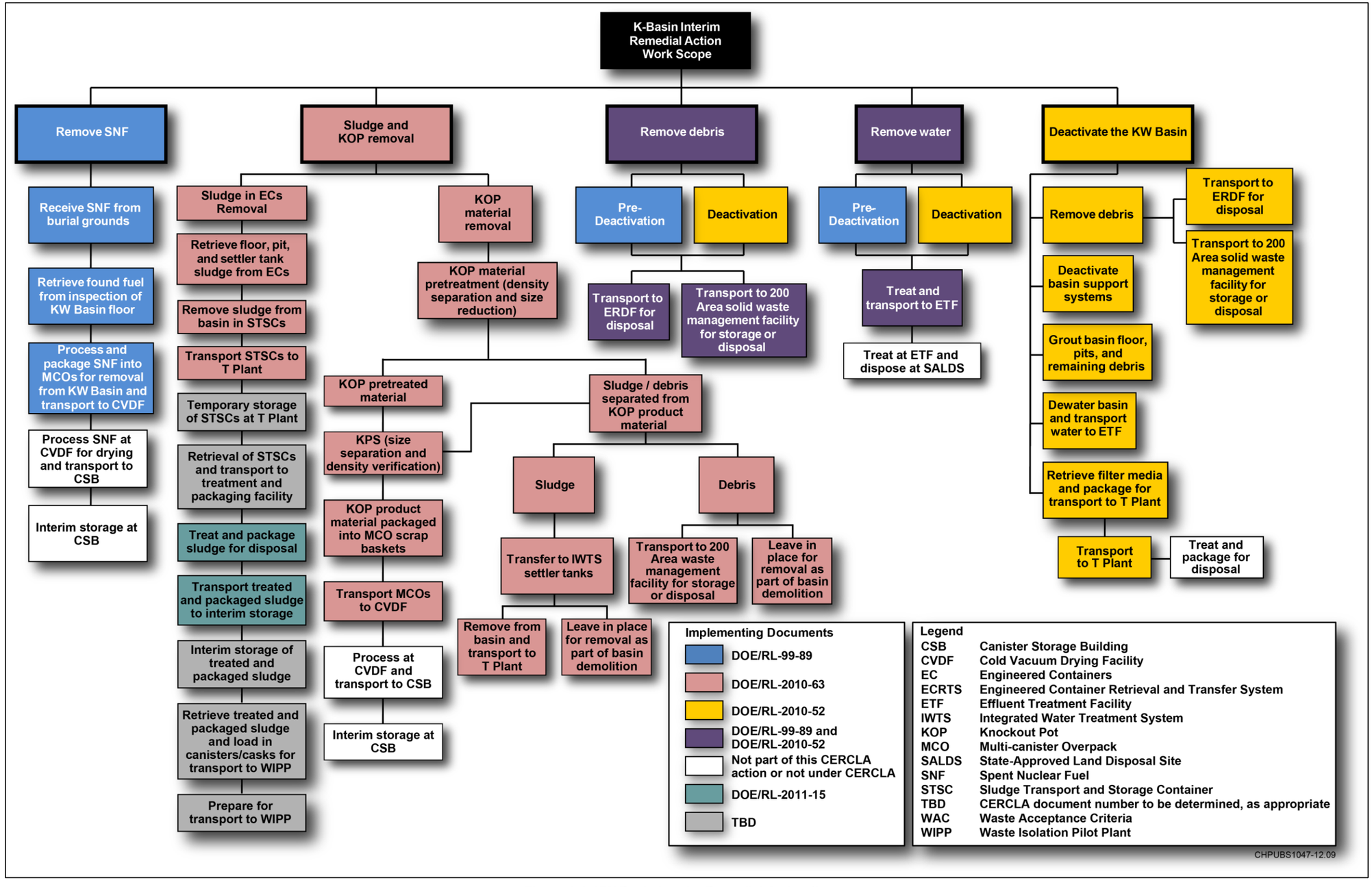

Figure 1-1. KW Basin Interim Remedial Action Scope

This page intentionally left blank.

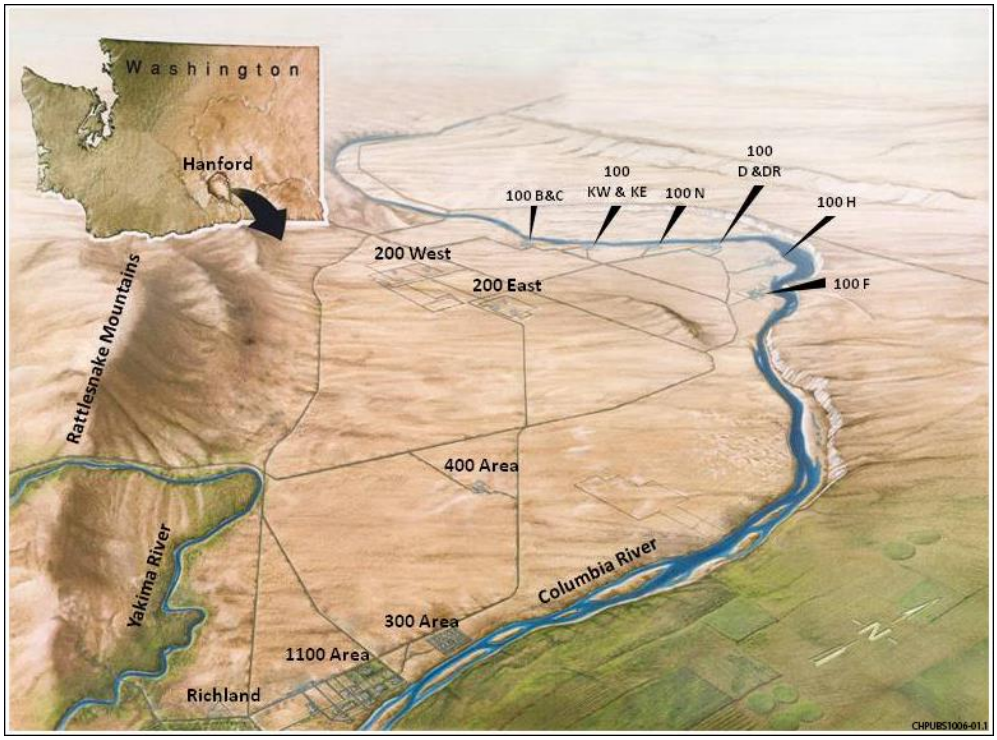

Figure 1-2. Site Map

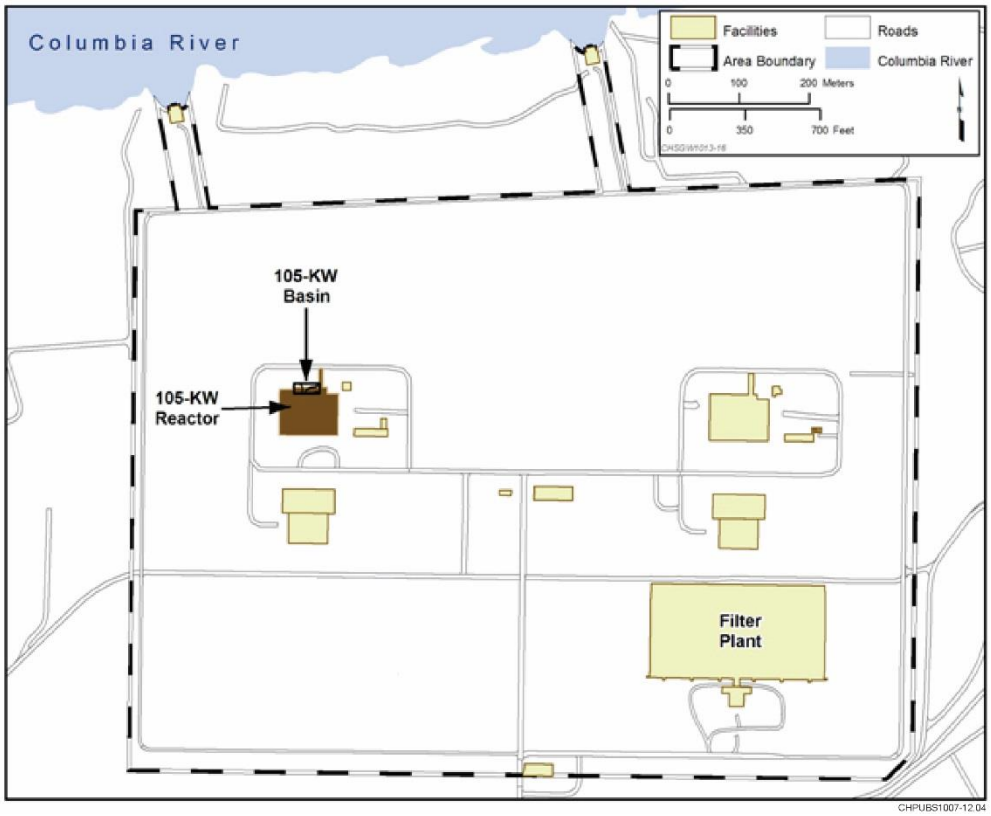

Figure 1-3. KW Basin in the 100-K Area of the Hanford Site, Adjacent to the Columbia River

Figure 1-4. Aerial View of the 100-K Area in 1966

The 100-K Area is located on relatively flat and level terracing near the Columbia River, with elevations generally between 120 and 150 m (394 and 492 ft) above mean sea level. Except near the river, low relief and gentle slopes characterize the 100-K Area. The area has been extensively disturbed and graded during reactor construction in the 1950s through present-day waste site remedial activities. Topography changes are greatest near the river, where surface elevations drop to approximately 116 m (380 ft).

Groundwater beneath the Hanford Site is in an upper, primarily unconfined aquifer system, as well as in deeper confined aquifers within the basalt. The Columbia River is the primary discharge area for both the unconfined and confined aquifer. The unconfined aquifer in the 100-KR-4 Operable Unit (OU) ranges from 5.2 m (17.1 ft) to more than 32 m (105 ft) thick. This aquifer is primarily present in the Ringold Formation unit E sand and gravel (Figure 1-5). This unit is overlain by the gravels and interbedded sand and silt of the Hanford formation, which comprise the majority of the vadose zone. The vadose zone ranges from less than 1 m (3.3 ft) thick near the Columbia River to 32 m (105 ft) thick inland. The uneven surface of the silt- and clay-rich Ringold upper mud (RUM) forms the bottom of the unconfined aquifer. Contaminant concentrations are generally highest within the uppermost portion of the aquifer, near the water table; however, mobile contaminants such as hexavalent chromium have been detected over the entire thickness of the aquifer, particularly near source areas.

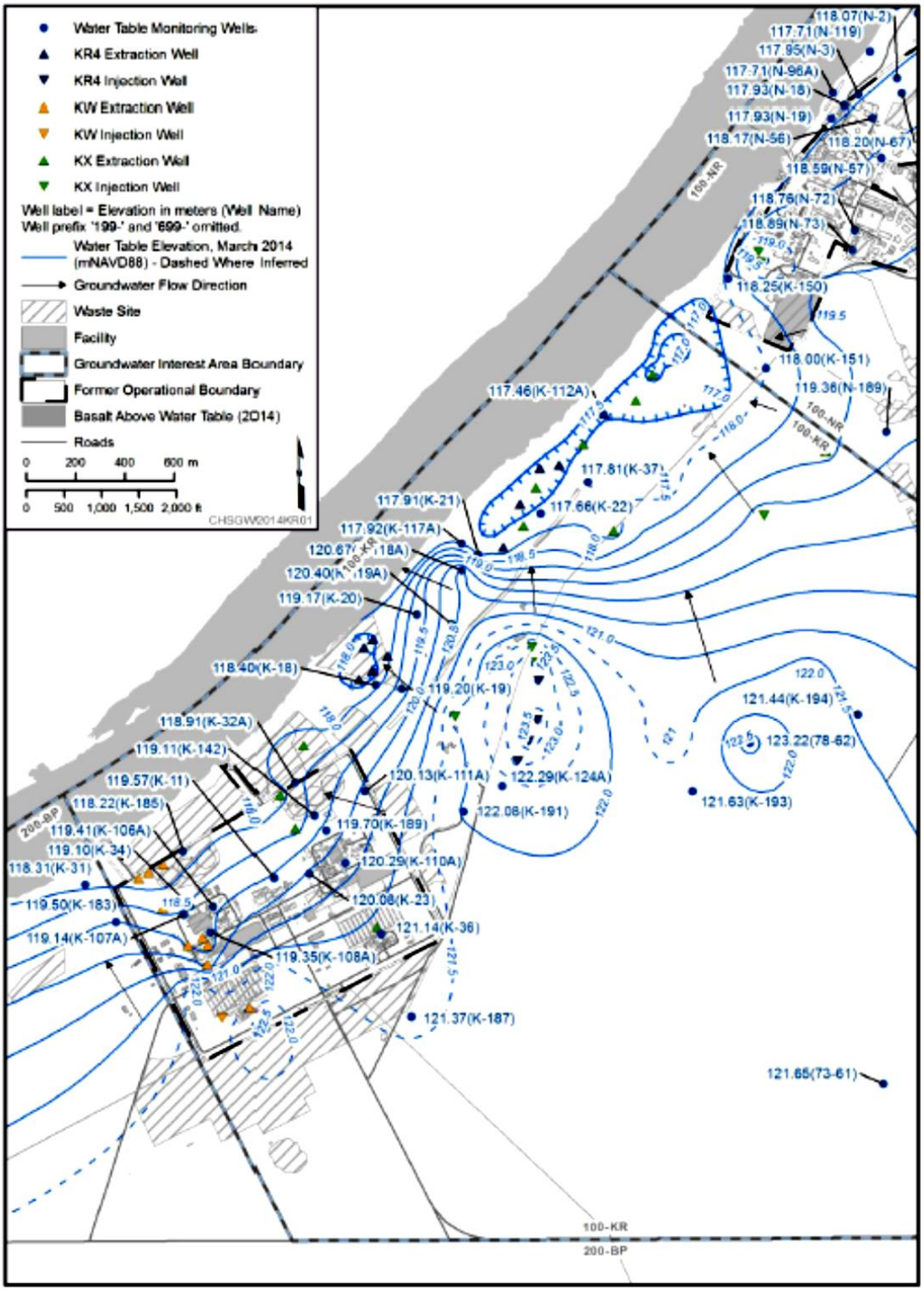

References: DOE/RL-2015-07, *Hanford Site Groundwater Monitoring Report for 2014*.
NAVD88, *North American Vertical Datum of 1988*.

Figure 1-5. 100-K Area Water Table Map, March 2014

Groundwater in the 100-KR-4 OU flows generally to the northwest, toward the Columbia River, which forms a discharge boundary for the unconfined aquifer. Operation of groundwater pump and treat (P&T) systems at the 100-KR-4 OU creates changes in groundwater flow direction and velocity. These changes are expressed as depressions and mounds in the water table, affecting the flow direction (Figure 1-5). Larger mounds (e.g., those produced by the combined discharges from the KR4 and KX P&T systems near the middle of the 116-K-2 Trench) create conditions of radial flow away from the mound, which locally diverts the groundwater flow direction away from the natural patterns. Groundwater further inland of the 100-K Area generally flows to the north and northeast, toward the 100-N and 100-D Areas. The actual flow direction and apparent velocity in this inland area are somewhat uncertain due to sparse groundwater elevation measurements in the area.

Daily and seasonal fluctuations in the river stage also affect groundwater flow in the 100-KR-4 OU. Longer term changes in the river stage produce more extensive and longer lived changes in water levels, hydraulic gradient, and flow directions in the unconfined aquifer (DOE/RL-2015-07, *Hanford Site Groundwater Monitoring Report for 2014*). Columbia River stage fluctuations also impact groundwater movement patterns, water levels, and discharge rates to the river. Controlled releases from the upstream Priest Rapids Dam generate these fluctuations. For most wells, a long-term trend of groundwater levels following river stage fluctuations is apparent.

The Hanford Site is characterized by a semiarid, shrub-steppe climate in the driest and warmest portion of the Columbia Basin. Surface winds are predominantly from the northwest during the winter and summer and from the southwest in the spring and fall. Average monthly wind speeds are lowest during the winter (averaging 10 km/hr [6 mi/hr]) and highest during the summer (averaging 15 km/hr [9 mi/hr]). The monthly average temperature ranges from a low of -0.24°C (31.7°F) in January to a high of 24.6°C (76.3°F) in July. Annual precipitation measurements typically range from approximately 8.7 to 28.8 cm (3.4 to 11.3 in.). Most precipitation occurs during late fall and winter, with more than half of the annual amount occurring from November through February. Winter monthly average snowfall ranges from 0.8 to 13.5 cm (0.3 to 5.3 in.).

1.4.2 Nature and Extent of Contamination

The KW Basin contaminants include sludge consisting of reactor plant operations corrosion products (including metallic uranium, uranium hydrides and oxides, plutonium, fission and activation products, and aluminum and zirconium compounds from the cladding), metal oxides from corrosion of basin equipment (including aluminum canisters and ion-exchange media from the water treatment system), concrete grit from the basin walls, sand, and dirt. The sludge inventory is presented in Table 1-2. Although operational data demonstrate past water leakage from the KW Basin, there is no evidence from monitoring data to suggest that water loss from the KW Basin has impacted area groundwater.

Table 1-2. Estimated Volumes of Container and Settler Sludge

	KW Originating		KW Settler Tanks	KE Originating		
	Container 210	Container 220	Container 230	Container 240	Container 250	Container 260
Average Sludge Depth in Container	3.7 ft	1.8 ft	3.25 ft	2.75 ft	5.7 ft	6.0 ft
Volume*	4.2 m^3	1.03 m^3	3.5 m^3	2.6 m^3	7.7 m^3	8.1 m^3

* Includes an estimated 0.0254 m^3 of segregated settler material (rounded to 0.03 m^3), which will be added to container 220.

Laboratory analyses have been completed for sludge samples acquired from all six ECs containing sludge in the KW Basin: SCS-CON-210, SCS-CON-220, SCS-CON-230, SCS-CON-240, SCS-CON-250, and SCS-CON-260. The following documents were used to help characterize the sludge stored in these containers:

- HNF-36985, *Data Quality Objectives for Sampling and Analysis of K Basin Sludge*
- KBC-33786, *Quality Assurance Project Plan/Sampling and Analysis Plan for Sludge in the KW Engineered Containers*
- KBC-40467, *Quality Assurance Project Plan / Sampling and Analysis Plan for Containerized KW Settler Sludge*
- PRC-STP-00270, *Data Validation and Assessment by the Sludge Treatment Project for Characterization Data from Engineered Container SCS-CON-220, -240, -250 and -260*
- PRC-STP-00523, *Data Validation and Assessment by the Sludge Treatment Project for Characterization Data from Engineered Container SCS-CON-230*
- PRC-STP-00560, *Data Validation and Assessment by the Sludge Treatment Project for Characterization Data from Engineered Container SCS-CON-210*

This page intentionally left blank.

2 Basis for Remedial Action

This chapter provides a brief description of the selected remedy, RAOs, and applicable or relevant and appropriate requirements (ARARs) for the work included in this RD/RAWP.

2.1 Selected Remedy

In the modified remedy description in the K Basins Interim Action ROD Amendment (EPA et al., 2005), provisions are included for sludge removed from the KW Basin to be placed in contingency storage while awaiting transfer to a treatment facility. This RD/RAWP addresses the work necessary to remove sludge from the KW Basin for management at T Plant and/or other 200 Area waste management facilities.

2.2 Remedial Action Objectives

Achievement of the RAOs identified in the K Basins Interim Action ROD (EPA/ROD/R10-99/059) that are applicable to this RD/RAWP include the following:

- **RAO #1:** Reduce the potential for future releases of hazardous substances from the K Basins to the environment:
  - Remove hazardous substances from the K Basins near the Columbia River in a safe and timely manner.
  - Provide for safe treatment, storage, and final disposition of sludge, water, and debris removed from the K Basins.

  This RAO will be met, in part, through the removal of sludge consolidated in ECs in the KW Basin. The sludge will be transported in STSC within the STS Cask to T Plant. Actions to remove other hazardous substances, including basin water and debris, from the KW Basin are outside the scope of this RD/RAWP but are included in the deactivation work scope (DOE/RL-2010-52, *Remedial Design and Remedial Action Work Plan for the K Basins Interim Remedial Action: 105-K West Basin Deactivation*).

- **RAO #2:** Reduce occupational radiation exposure to workers at the basins:

  This RAO will be met through a DOE approved radiation protection program that implements the requirements of 10 CFR 835, “Occupational Radiation Protection,” and through implementation of as low as reasonably achievable (ALARA) measures.

- **RAO #3:** Address the sludge management concerns identified in Section 5.2.1 of the K Basins Interim Action ROD (EPA/ROD/R10-99/059):
  - The surface dose for an unshielded container of sludge is many times higher than the 200 mrem/hr limit for contact-handled waste. The contact dose associated with floor and pit sludge could be as high as 128,000 mrem/hr, and the contact dose rate associated with canister and wash sludge could be as high as 1.75 million mrem/hr. Therefore, it is anticipated that containers of sludge will need to be managed as remote-handled waste unless special overpacking is provided.
  - High concentrations of fissile materials (i.e., uranium and plutonium) require careful evaluation of criticality control for all activities involving the sludge.
  - Metal fines and metal hydrides in the sludge (e.g., uranium, uranium hydride, and zirconium) are potentially pyrophoric, reactive, and capable of generating flammable gas.

This RAO will be met for materials to be removed from the KW Basin through the following actions:

1. The radiation dose rates to personnel from containerized sludge will be minimized through one or more of the following controls:
    a. Retention of water in the STSCs for shielding while in the KW Basin
    b. Use of shielded casks during filling and transfer of STSCs containing sludge
    c. Use of long-handled and remote-operated tools
    d. Loading of the STSCs by remote operation in a shielded facility
2. Criticality hazards will be evaluated and mitigated through the design process using a DOE approved criticality control program.
3. The amount of sludge loaded into each STSC will be limited based on type and material density, respectively. Interiors of the STS casks will also be rendered inert prior to shipment.

2.3 Remedial Action Goals

Remedial action goals are not applicable to work performed under this RD/RAWP. Endpoint criteria for sludge and KOP removal activities included in this RD/RAWP are identified in HNF-20632, *End Point Criteria for the K Basins Interim Remedial Action*.

2.4 Applicable or Relevant and Appropriate Requirement Compliance

40 CFR 300, "National Oil and Hazardous Substances Pollution Contingency Plan;" the K Basins Interim Action ROD (EPA/ROD/R10-99/059); and the K Basin Interim Action ROD Amendment (EPA et al., 2005) require that remedial actions comply with federal and state ARARs. This section discusses the ARARs that are applicable to the scope of this RD/RAWP and how the ARARs will be met during the associated work.

Table 2-1 identifies the ARARs that are applicable for the work scope of this RD/RAWP, as well as the means for implementation.

Table 2-1. ARARs for K Basins Sludge Interim Remedial Action

Citation	ARAR	Requirement	Means of Implementation
40 CFR 302, "Designation, Reportable Quantities, and Notification"	ARAR	These requirements apply to new releases of CERCLA hazardous substances that occur or are discovered. Determinations under 40 CFR 302 are based on the identification of any release that exceeds the regulatory reportable quantity for a listed hazardous substance.	The substantive requirements of 40 CFR 302 for determination of reportable quantities will be applied to any new release that is identified and notification will be made to DOE and EPA project managers if a new release occurs or is discovered during the work. This is an action-specific requirement.
Regulations Pursuant to the *Toxic Substances Control Act of 1976*, 15 USC 2601, et seq.			
40 CFR 761, "Polychlorinated Biphenyls (PCBs) Manufacturing, Processing, Distribution in Commerce, and Use Prohibitions" 40 CFR 761.1(b)(4), "Applicability "PCB Waste" 40 CFR 761.50(b)(3) and (7) "Applicability 40 CFR 761.50(c) "PCB Remediation Waste" 40 CFR 761.61(a)(4) 40 CFR 761.61(c) 40 CFR 761.79(h), "Decontamination Standards and Procedures"	ARAR	These regulations apply to the storage and disposal of PCB wastes including liquid PCB wastes, PCB items, PCB remediation waste, PCB bulk product wastes, and PCB/radioactive wastes at concentrations greater than 50 parts per million. These regulations also provide options for decontamination of materials contaminated with PCBs.	Some materials and/or debris addressed under this remedial action could include various forms of PCB wastes including but not limited to, PCB items, PCB liquids, and PCB articles, PCB remediation waste, and/or containers that would be managed in accordance with the substantive requirements of these standards if encountered and/or generated during the remedial action. The substantive provisions of this regulation apply to sludge waste streams that will be removed from the basin. Sludge will be removed from the basin and sent to T Plant or other 200 Area waste management facility approved for the storage of PCB remediation waste. This is a chemical-specific requirement.

Table 2-1. ARARs for K Basins Sludge Interim Remedial Action

Citation	ARAR	Requirement	Means of Implementation
Regulations Pursuant to the *Clean Air Act of 1977*, 42 USC 7401, et seq.			
40 CFR 61, "National Emission Standards for Hazardous Air Pollutants" 40 CFR 61.92, "Standard" 40 CFR 61.93, "Emission Monitoring and Test Procedures"	ARAR	This regulation sets limits for radionuclide emissions, which cannot exceed those amounts that would cause any member of the public to receive an effective dose equivalent of 10 mrem/yr or greater. Emissions shall be monitored per 40 CFR 61.93.	Some activities under this remedial action could potentially contain radioactive constituents. Potential emissions from work under this action would be performed in accordance with this standard. Removal of the sludge contained in ECs will occur in a modification to the fuel transfer system annex adjacent to the KW Basin, which will vent filtered and monitored emissions to the environment that are generated when the STSCs are filled with sludge. Substantive requirements limiting emissions, emission controls, and emission monitoring apply. This is an action-specific requirement.
40 CFR 61.145, "Standard for Demolition and Renovation" 40 CFR 61.145(a)(1) and (2), and 40 CFR 61.145(c) 40 CFR 61.150, "Standard for Waste Disposal for Manufacturing, Fabricating, Demolition, Renovation, and Spraying Operations"	ARAR	These standards apply to demolition activities, including the removal of regulated ACM. The standards of 40 CFR 61.145(a)(1) and (2) are used to determine when the requirements of 40 CFR 61.145(c) apply to demolition activities. The standards of 40 CFR 61.150 are used to control emissions during collection, processing, packaging, and transport of any asbestos-containing waste material.	Some work under this remedial action will involve materials that contain asbestos. The substantive provision of 40 CFR 61.145(c) would comply with 40 CFR 61.145(a)(1) and (2) for demolition of structures that contain regulated ACM under this remedial action. The substantive provisions of 40 CFR 61.150 would be met during activities that involve collecting, processing, packaging, and transferring asbestos-containing waste material under this remedial action. Removal of any asbestos-containing transite siding on the KW Basin required for modification of the fuel transfer system annex to be used for removal of sludge will be accomplished in accordance with substantive requirements. This is an action-specific requirement.

Table 2-1. ARARs for K Basins Sludge Interim Remedial Action

Citation	ARAR	Requirement	Means of Implementation
***Atomic Energy Act of 1954*, 42 USC 2011, et seq.**			
10 CFR 20, "Standards for Protection Against Radiation"	ARAR	The dose limits considered relevant and appropriate are the doses to an individual member of the public that cannot exceed 0.1 rem/yr (100 mrem/yr) total effective dose equivalent, and the 2 mrem/hr from external sources in an unrestricted area.	DOE performs a comprehensive sitewide environmental monitoring program at the Hanford Site. This is an action-specific requirement.
10 CFR 61, "Licensing Requirements for Land Disposal of Radioactive Waste"	ARAR	This standard provides for licensing of land disposal of radioactive wastes by the NRC.	The substantive provisions of the general prohibition on near-surface disposal of greater than Class C radioactive waste and the general performance objectives of 10 CFR 61.40, "General Requirement," are relevant and appropriate to this work.
40 CFR 190, "Environmental Radiation Protection Standards for Nuclear Power Operations"	ARAR	The dose standards considered relevant and appropriate are the public dose limit of 25 mrem/yr to the whole body, 75 mrem/yr to the thyroid, and 25 mrem/yr to any other organ.	DOE performs a comprehensive sitewide environmental monitoring program at the Hanford Site. This is an action-specific requirement.
40 CFR 191, "Environmental Radiation Protection Standards for Management and Disposal of Spent Nuclear Fuel, High-Level and Transuranic Radioactive Wastes"	ARAR	These standards apply to facilities used for disposal of spent nuclear, high-level, and TRU wastes. Onsite disposal on the Hanford Site of TRU and high-level waste is prohibited.	TRU waste will be sent to 200 Areas waste management facilities for storage, pending treatment and packaging for disposal. This remedial action does not involve onsite disposal of spent nuclear, high-level, or TRU wastes. This is a chemical-specific requirement.

Table 2-1. ARARs for K Basins Sludge Interim Remedial Action

Citation	ARAR	Requirement	Means of Implementation
10 CFR 835, "Occupational Radiation Protection"	ARAR	This regulation is applicable to all activities performed by the K Basins interim remedial action.	A DOE approved radiation protection program is in place that implements the requirements of 10 CFR 835 and describes how radiological design reviews are to be performed, to ensure that DOE requirements for radiological design are incorporated into the designs for new facilities and equipment, as well as modifications of existing facilities and equipment. This is an action-specific requirement.
***Hazardous Materials Transportation Act of 1975*, 49 USC 1801-1813**			
49 CFR 171, "General Information, Regulations, and Definitions"	ARAR	This regulation is applicable to any offsite transportation of potentially hazardous material, including samples and waste generated by the K Basins interim remedial action.	Sludge contained in ECs will ultimately be shipped offsite. Samples shipped offsite will be in conformance with work processes designed to satisfy transportation requirements. The substantive standards of these regulations will apply to wastes packaged for transport from the KW Basin to other locations. This is a chemical-specific requirement.
Endangered Species Act of 1973 (16 USC 1531 et seq., Subsection 1536(c))	ARAR	These laws and implementing regulations prohibit actions by federal agencies that are likely to jeopardize the continued existence of listed species or result in the destruction or adverse modification of critical habitat.	The remedial action will be implemented at a location where such species could be encountered during work activities. Substantive requirements of this act are potentially applicable if threatened or endangered species are identified in areas where the remedial action will occur. If the work is within critical habitat or buffer zones surrounding threatened or endangered species, mitigation measures must be taken to protect the resource in accordance with substantive requirements of these law and regulations. This is a location-specific requirement.

Table 2-1. ARARs for K Basins Sludge Interim Remedial Action

Citation	ARAR	Requirement	Means of Implementation
National Historic Preservation Act of 1966 (16 USC 470, Section 106)	ARAR	The *National Historic Preservation Act of 1966* requires that historic properties be appropriately considered in planning federal initiatives and actions. These laws also require federal agencies to consider the impacts of their undertaking on cultural properties through the identification, evaluation, and mitigation processes, and consultation with interested parties.	Based on past identification of cultural and historic sites at the Hanford Site, these types of sites could be encountered during the remedial action. The substantive requirements of this act are potentially applicable to actions that might disturb these types of sites. Historic reviews will be performed to identify items and properties of historic interest. This is a location-specific requirement.
Archeological and Historic Preservation Act of 1974 (16 USC 469a-1 – 469a-2[d])	ARAR	These laws apply to activities that could cause the loss of any archaeological or historic data. The act mandates preservation of the data and does not require protection of the actual site.	Based on past identification of archaeological and historic sites at the Hanford Site, the substantive requirements of this act are potentially applicable for actions that might disturb these sites. Cultural resource reviews will be performed to identify sites of cultural value. This is a location-specific requirement.
The Hanford Reach Study Act (Public Law 100-605, 102 Stat. 3043)	ARAR	This law required an analysis of protection alternatives for the Hanford Reach.	Because the remedial action takes place near the Columbia River and requires minimizing and providing mitigation for direct and adverse impacts on the river, the substantive requirements of this act are potentially applicable to the work.
***Resource Conservation and Recovery Act of 1976*, 42 USC 6901, et seq.**			
40 CFR 268, "Land Disposal Restrictions"	ARAR	This regulation provides for the treatment of dangerous wastes that will be land disposed.	The substantive provisions of this regulation will be applicable to dangerous and/or mixed wastes that may be generated during this work, if such wastes will be land disposed.

Table 2-1. ARARs for K Basins Sludge Interim Remedial Action

Citation	ARAR	Requirement	Means of Implementation
Regulations Pursuant to RCW 70.94, "Washington Clean Air Act"			
WAC 246-247, "Radiation Protection—Air Emissions" WAC 246-247-040(3) and (4), "General Standards" WAC 246-247-075(8), "Monitoring, Testing and Quality Assurance"	ARAR	These regulations establish the monitoring, testing, and quality assurance requirements for radioactive air emissions from major sources. These regulations also include requirements for continuous sampling and provide for periodic samples (e.g., grab samples) in cases where continuous sampling is not practical and radionuclide emission rates are relatively constant. These regulations also provide the means by which alternative effluent flow rate measurement procedures or site selection and sample extraction procedures may be used, as approved by the lead agency. These regulations also establish requirements to monitor nonpoint and fugitive emissions of radioactive material.	The potential exists for generating fugitive, diffuse, and/or point source emissions during this remedial action. The removal of the sludge contained in ECs will occur in a modification to the fuel transfer system annex adjacent to the KW Basin, which will vent filtered and monitored emissions to the environment that are generated from filling the STSCs with sludge; this is considered best available radionuclide control technology. Requirements limiting emissions, emission controls, and emission monitoring apply. Fugitive emissions from the KW Basin are monitored in accordance with substantive requirements. This is an action-specific requirement.
Regulations Pursuant to RCW 70.105, "Hazardous Waste Management"			
WAC 173-303-016, "Dangerous Waste Regulations," "Identifying Solid Waste"	ARAR	This regulation applies for determining which materials are and are not solid waste. This determination is used to establish which wastes are subject to the designation procedures of WAC 173-303-070(3), "Designation of Dangerous Waste."	Wastes that are newly generated during the work will be subject to the substantive provisions of this regulation to determine, what portion, if any, is subject to the procedures of WAC 173-303-070(3). This is an action-specific requirement.

Table 2-1. ARARs for K Basins Sludge Interim Remedial Action

Citation	ARAR	Requirement	Means of Implementation
WAC 173-303-070(3), "Designation of Dangerous Waste"	ARAR	This regulation applies for the evaluation of solid wastes to determine if such wastes are designated as dangerous or mixed waste. Solid wastes that are designated as dangerous or mixed wastes are subject to management and disposal standards of WAC 173-303.	The nonradioactive component of wastes that are newly generated from the work will be evaluated according to the substantive provisions of this regulation. Wastes that are determined to be dangerous or mixed waste will be managed in accordance with the requirements of WAC 173-303 upon receipt to the receiving facility. The nonradioactive component of the sludge is not designated as a dangerous waste under WAC 173-303. New waste streams that are designated and that are not treated to remove dangerous waste characteristics prior to transport from the basin would be managed as radioactive mixed waste at the receiving facility. This is an action-specific requirement.
WAC 173-303-140(4), "Land Disposal Restrictions"	ARAR	This regulation establishes state standards for land disposal of dangerous waste and incorporates, by reference, the federal land disposal restrictions of 40 CFR 268 that are applicable to solid waste designated as dangerous or mixed waste in accordance with WAC 173-303-070(3).	Dangerous and/or mixed wastes that are newly generated during the work will be treated to meet land disposal restrictions if destined for land disposal. This is an action-specific requirement.
WAC 173-303-170(3), "Requirements for Generators of Dangerous Waste"	ARAR	This regulation establishes standards for the temporary management of wastes that are designated as dangerous or mixed waste. WAC 173-303-170(3) includes, by reference, the substantive provisions of both the satellite accumulation standards for management in containers under WAC 173-303-630, "Use and Management of Containers," and for tanks under WAC 173-303-640, "Tank Systems."	Dangerous and/or mixed wastes that are newly generated during this response action will be managed in accordance with the substantive provisions of these standards. This is an action-specific requirement.

Table 2-1. ARARs for K Basins Sludge Interim Remedial Action

Citation	ARAR	Requirement	Means of Implementation
WAC 173-400, "General Regulations for Air Pollution Sources" WAC 173-400-040(3) and (8), "General Standards for Maximum Emissions" WAC 173-400-113, "Requirements for New Sources in Attainment or Unclassifiable Areas"	ARAR	These laws and regulations require that all sources of air contaminants meet the standards for visible emissions, fallout, fugitive emissions, odors, emissions detriment to persons or property, sulfur dioxide, concealment and masking, and fugitive dust. Requires the use of reasonably available control technology. This regulation applies to new and modified sources and requires that methods of controls be employed to minimize the release of associated criteria and toxic air emissions. Emissions are to be minimized through application of best available control technology.	The potential exists for fugitive emissions during performance of the remedial action. Substantive requirements of the general standards for control of fugitive emissions would be applied, as appropriate, to minimize the generation of fugitive dust that occurs during building modification and material transfer activities. This is an action-specific requirement. Substantive requirements of this regulation would be applicable to remedial actions performed at the site if treatment technology emits regulated air emissions. This is an action-specific requirement.
WAC 173-460, "Controls for New Sources of Toxic Air Pollutants" WAC 173-460-030, "Applicability" WAC 173-460-060, "Control Technology Requirements" WAC 173-460-070, "Ambient Impact Requirement" WAC 173-460-150, "Table of ASIL, SQER and de Minimis Emission Values"	ARAR	These regulations apply for the determination of de minimis emission values and establishment of control technology as appropriate for new or modified toxic air pollutant sources likely to increase toxic air pollutant emissions. Requires T-BACT and demonstration that emissions of toxic air pollutants will not endanger human health or safety.	It is not expected that work performed under this remedial action will trigger standards for T-BACT. However, substantive requirements of these regulations would potentially be applicable if treatment technology approaches are needed that would emit toxic air emissions. This is an action-specific requirement.

Table 2-1. ARARs for K Basins Sludge Interim Remedial Action

Citation	ARAR	Requirement	Means of Implementation
WAC 173-480, "Ambient Air Quality Standards and Emission Limits for Radionuclides" WAC 173-480-050, "General Standards for Maximum Permissible Emissions" WAC 173-480-070(2), "Emission Monitoring and Compliance Procedures"	ARAR	This regulation establishes general standards for all radionuclide emission units and requires emission units to meet WAC 246-247, requiring every reasonable effort to maintain radioactive materials in effluents to unrestricted areas ALARA. The regulation indicates that control equipment facilities operating under ALARA shall be defined as reasonably achievable control technology . This regulation applies for determining compliance with the radioactive emission standard. Compliance with the public dose standard is determined by calculating exposure at the point of maximum annual air concentration in a location in which the public may be located in an unrestricted area.	The potential for fugitive and diffuse emissions during building modification and material transfer activities will require efforts to minimize these emissions. This is an action-specific requirement. Fugitive and diffuse emissions resulting from activities under this remedial action will be performed in substantive compliance with the public dose standard during the work. This is an action-specific requirement.
10 CFR 834, "Radiation Protection of the Public and the Environment" (proposed in 58 FR 16268)	TBC	This proposed rule included public dose limits of 100 mrem/yr total effective dose equivalent.	These public dose limits are to be considered as limits for activities performed as part of the remedial action. Note that these TBC standards are the same standards as the enforceable NRC and state ARARs identified in this table.
WCH-191, *Environmental Restoration Disposal Facility Waste Acceptance Criteria*	TBC	This document establishes the waste acceptance criteria for the Environmental Restoration Disposal Facility.	Waste destined for disposal at the Environmental Restoration Disposal Facility shall be shown to conform to the facility's waste acceptance criteria.
DOE/WIPP-02-3122, *Transuranic Waste Acceptance Criteria for the Waste Isolation Pilot Plant*	TBC	This document establishes the waste acceptance criteria for WIPP.	Waste destined for disposal at the WIPP must be shown to conform to the facility's waste acceptance criteria.

Table 2-1. ARARs for K Basins Sludge Interim Remedial Action

Citation	ARAR	Requirement	Means of Implementation
DOE/WIPP-02-3214, *Remote-Handled TRU Characterization Program Implementation Plan*	TBC	This document establishes accepted means of characterization of remote-handled transuranic waste.	Waste destined for WIPP must be characterized in accordance with this implementation plan.

Note: Complete citations for references listed in this table are provided in Chapter 10.

ACM = asbestos-containing material
ALARA = as low as reasonably achievable
ARAR = applicable or relevant and appropriate requirement
CERCLA = *Comprehensive Environmental Response, Compensation, and Liability Act of 1980*
DOE = U.S. Department of Energy
EC = engineered container
EPA = U.S. Environmental Protection Agency
NRC = U.S. Nuclear Regulatory Commission
PCB = polychlorinated biphenyl
STSC = sludge transport and storage container
T-BACT = best available control technology for toxics
TBC = to be considered
TRU = transuranic
WIPP = Waste Isolation Pilot Plant

3 Design and Processing Bases

This chapter addresses the design basis and design development approach for work performed under this RD/RAWP.

3.1 Engineered Container Retrieval and Transfer System Design Basis

The design basis of the ECRTS consists of the following:

- RAOs, ARARs, and their implementation are described in Sections 2.2 and 2.4.
- Sludge characteristics derived from the completed sludge sampling and characterization campaigns are documented in HNF-SD-SNF-TI-015, *Spent Nuclear Fuel Project Technical Databook, Volume 2, Sludge*.
- Functional design criteria and performance requirements are described in HNF-40475, *Function Design Criteria Sludge Treatment Project Phase 1 – ECRTS*.
- Design requirements and matrices are provided in PRC-STP-00704, *Design Compliance Matrices for the Sludge Treatment Project Engineered Container Retrieval and Transfer System*.
- Controls are documented in PRC-STP-00731, *Sludge Treatment Project Engineered Container Retrieval and Transfer System Final Design Control Decision Report*.
- Safety basis is described in PRC-STP-00718, *Sludge Treatment Project Engineered Container Retrieval and Transfer System Preliminary Documented Safety Analysis*.

3.2 Engineered Container Retrieval and Transfer System Processing Basis

ECRTS processing will be considered complete once sludge has been removed from the KW Basin in accordance with the K Basins endpoint criteria (HNF-20632).

3.3 Engineered Container Retrieval and Transfer System Design Description

A description of the ECRTS process for retrieving sludge from ECs in the KW Basin and filling the STSCs with that sludge is provided in the following subsections. Figure 3-1 provides a flow diagram of the ECRTS process, showing the major components. Additional ECRTS details are provided in HNF-41051. The annex will not normally be occupied during sludge transfer operations. Operations will be monitored and controlled remotely, with the interior of the annex loading bay monitored by closed-circuit television cameras.

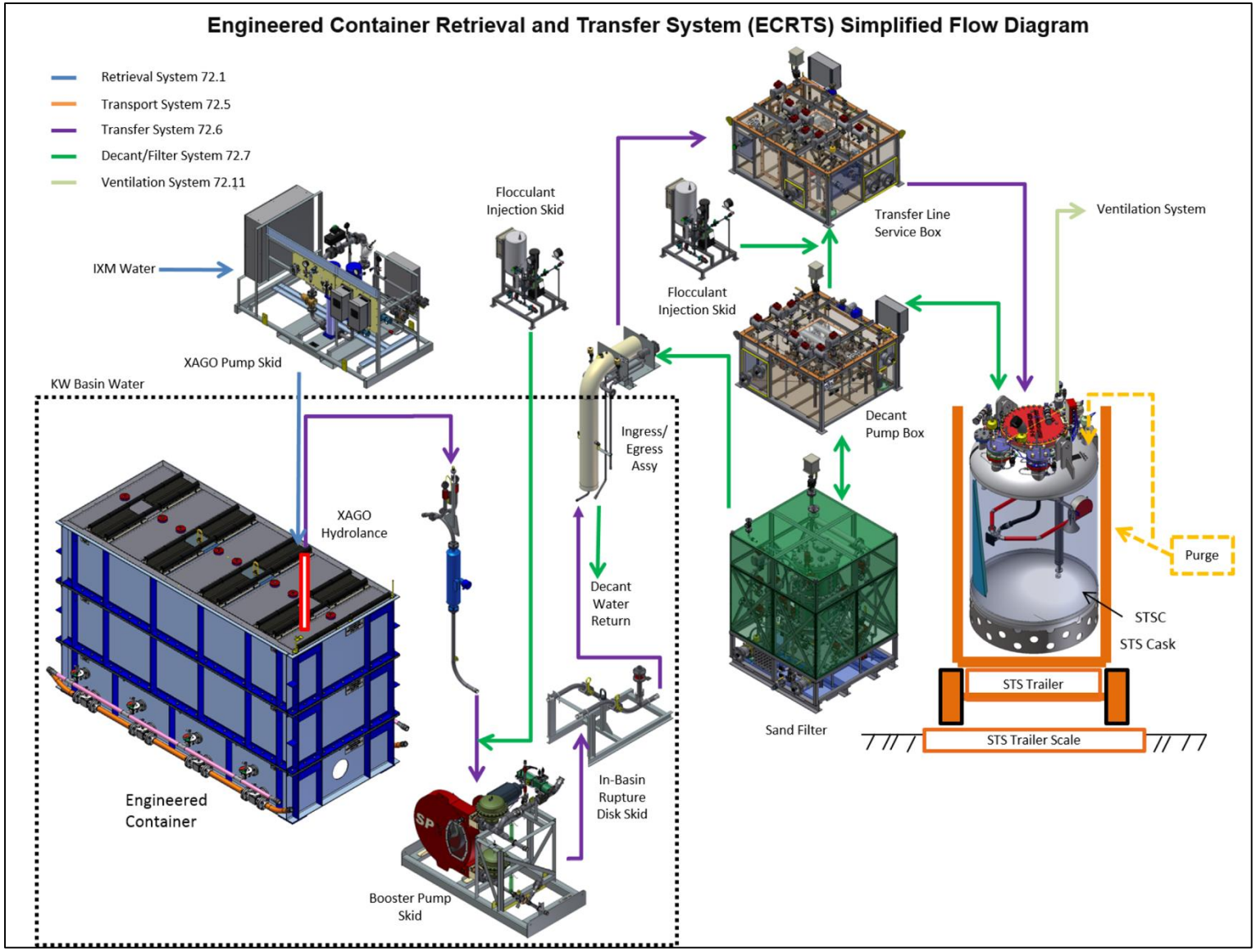

Figure 3-1. ECRTS Process Flow Diagram

An empty STSC located within the STS cask will be received from T Plant at the annex. The STS cask and transport trailers are existing systems. The STS cask is designed to remain on the transport trailer. The transport trailer will be positioned in the annex and aligned with the sludge loading equipment. After the trailer has been aligned, the tractor will be detached from the trailer and removed from the annex.

The transporter, STS cask, and STSC will then be prepared for loading. An initial (empty) weight of the STSC/STS cask on the trailer will be obtained. An overhead bridge crane will be used to remove the STS cask lid and place it on the transport trailer. The sludge transfer, decant, and sand filter backwash hoses will be connected manually to the nozzles on the STSC. The process ventilation lines and purge line will be connected to the STSC, and the liquid-level detector, high-level switch, slurry leak detector, and decant leak detector, will be connected. The STSC will then be filled with treated water from the basin ion-exchange module (IXM), and a weight measurement will be taken to determine the STSC upper tare weight (for process control). The IXM water will then be removed from the STSC to heel level using the decant pump system. A weight measurement of the STSC/STS cask and trailer will then be taken to establish the heel tare weight for process control during sludge loading.

A batch of sludge will be retrieved from one of the ECs and transferred into the staged STSC. Flocculent will be added to the sludge during transfer to enhance settling of the suspended solids. Sludge will be allowed to settle within the STSC to concentrate the solids and clarify the supernate. Additional flocculent will be added to the supernate, if necessary. After the supernate has clarified during the settling period, it will be decanted and filtered to remove suspended sludge particles. The filtered supernate will be returned to the basin. Subsequent batches of sludge will be added to the STSC and settled, and excess supernate will be removed in the same manner as previously described until the prescribed quantity of sludge is collected in the STSC. After the final retrieval batch, solids collected on the sand filter will be backwashed directly into the STSC. Water will be added to the STSC to fill the container, leaving headspace for possible gas generation during transport and storage at T Plant. The STSC will be purged with an inert gas (nitrogen), the ports will be configured for transport, the STS cask lid will be installed, and the STS cask will be purged with nitrogen. Radiological surveys will then be performed, and the STSC will be transported to T Plant for temporary storage.

If too much sludge is added to an STSC, an overfill recovery tool (ORT) will be engaged to mobilize the sludge and transfer the desired amount of sludge from the STSC back into an EC in the basin. After removing the desired quantity of sludge, the overfill recovery line would be flushed, the ORT would be disconnected, and all connections would be sealed. Each STSC is fitted with an ORT in anticipation of this potential scenario.

Sludge is currently stored underwater in the KW Basin in six ECs shown in Figures 3-2 and 3-3. Two views of an EC are shown in Figures 3-4 and 3-5. Prior to sludge retrieval, the existing lids and top two sections of the ECs will be removed (as depicted in Figure 3-4) and replaced with new lids designed to interface with the sludge retrieval tool (XAGO[6]) to allow sludge to be retrieved (Figure 3-5). The XAGO retrieval tool will be used to retrieve sludge from the ECs and, with the booster pump, transfer sludge from the engineered containers to an STSC. Sludge is retrieved from only one EC at a time. Figure 3-2 shows the installation of parallel sludge retrieval equipment trains, designated as the A and B trains.

The A train sludge retrieval equipment is located in the center bay of the KW Basin. The B train sludge retrieval equipment is located in the east bay of the KW Basin. The parallel sludge retrieval equipment

[6] XAGO Nuclear Limited, Clevedon, Avon, UK

trains permit the layering of settler tank sludge from SCS-CON-230 with the KE Basin sludge from SCS-CON-240, SCS-CON-250, and SCS-CON-260 into an STSC, as discussed in this chapter.

The XAGO sludge retrieval tool, manufactured by XAGO Nuclear Limited, consists of an adjustable annular jet pump and fluidizer (Figure 3-6). The retrieval tool, which has check valves in the supply hoses to prevent backflow of sludge into the IXM water service header, will be supplied with basin IXM water during use. The retrieval tool consists of an annular jet pump to provide both suction and motive force to move the slurry, a low-pressure Coanda[7] fluidizer head to entrain solids at the suction end of the retrieval tool, and a set of high-pressure nozzles used to break up high shear strength materials. The performance of the retrieval tool can be adjusted by inserting or removing circular metal shims from the jet pump body during initial setup, prior to installation in the basin.

3.3.1 Sludge Transfer

Sludge will be retrieved from an existing EC using the XAGO retrieval tool (Figure 3-6), at nominally 5 volume percent solids and approximately 265 L/min (70 gallons per minute [gpm]), and transferred to a peristaltic booster pump via a flexible hose. Flocculent will be added to sludge retrieved from the ECs, as it is being transferred to an STSC, to enhance the settling of suspended sludge particles in the STSC. The flocculent injection point during retrieval will be upstream of the pulsation dampener (on the inlet side of the booster pump) and has a double-check valve isolation to prevent backflow of slurry. Batches of sludge slurry will be transferred by the underwater booster pump in the KW Basin to the STSC in the KW annex via the ingress/egress assembly (Figure 3-7), which is used to transition from the underwater hose in the basin to the above basin hose-in-hose leading to the annex in a shielded hose chase (Figure 3-8). The flexible hose transitions to pipe and valves in a transfer line service box located in the annex (Figures 3-8 and 3-9). A flexible hose connects the slurry transfer pipeline from the transfer line service box to the STSC.

Approximately 15 minutes are necessary for transferring a batch of sludge in an EC to an STSC. Following each sludge transfer, the transfer line is flushed with approximately 190 L (50 gal) of basin water to minimize the potential for line plugging. Subsequent batches of sludge added to the STSC will require less time to fill.

[7] Coanda Research and Development Corpooration, Burnaby, BC, Canada

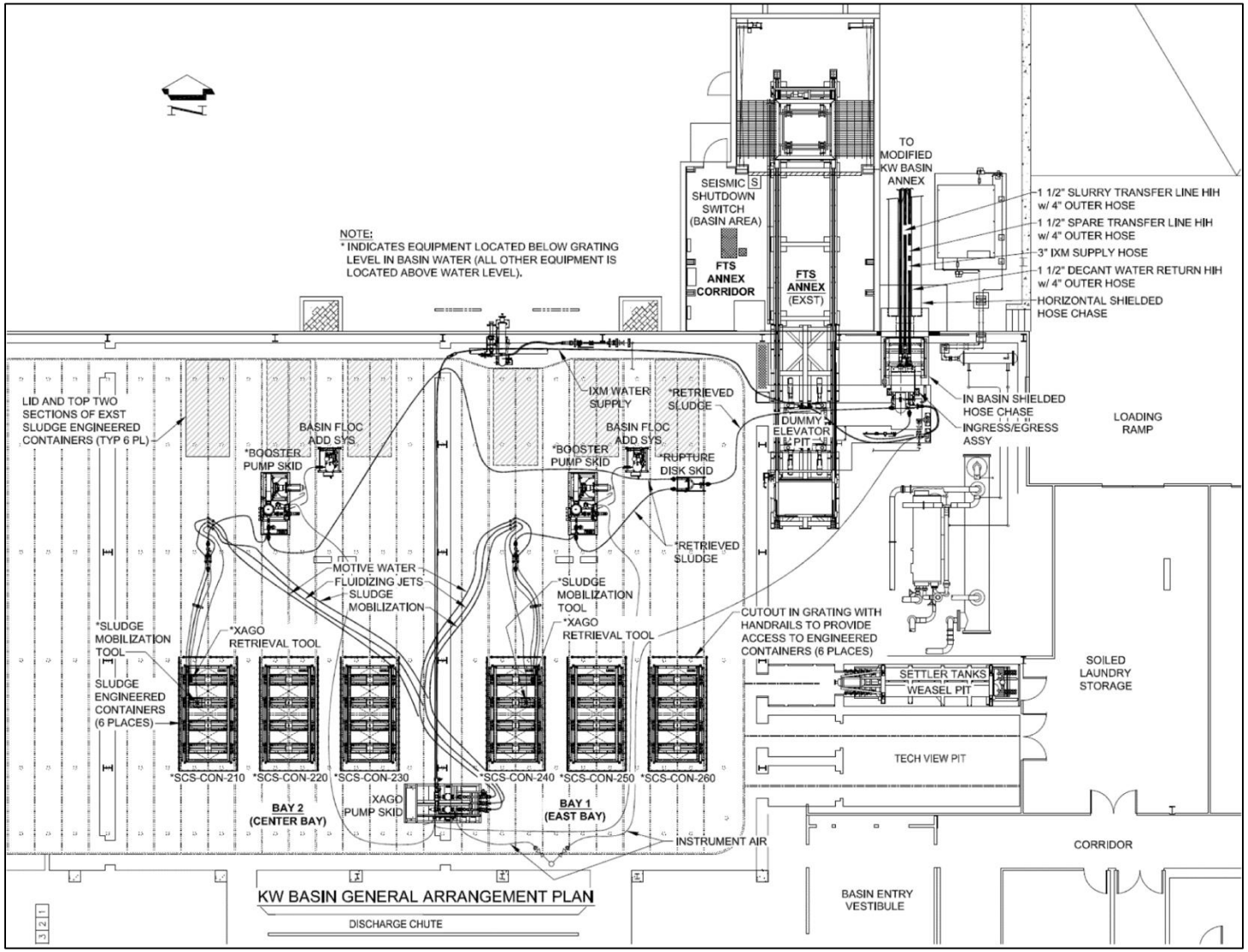

Figure 3-2. KW Basin General Arrangement Showing Engineered Containers

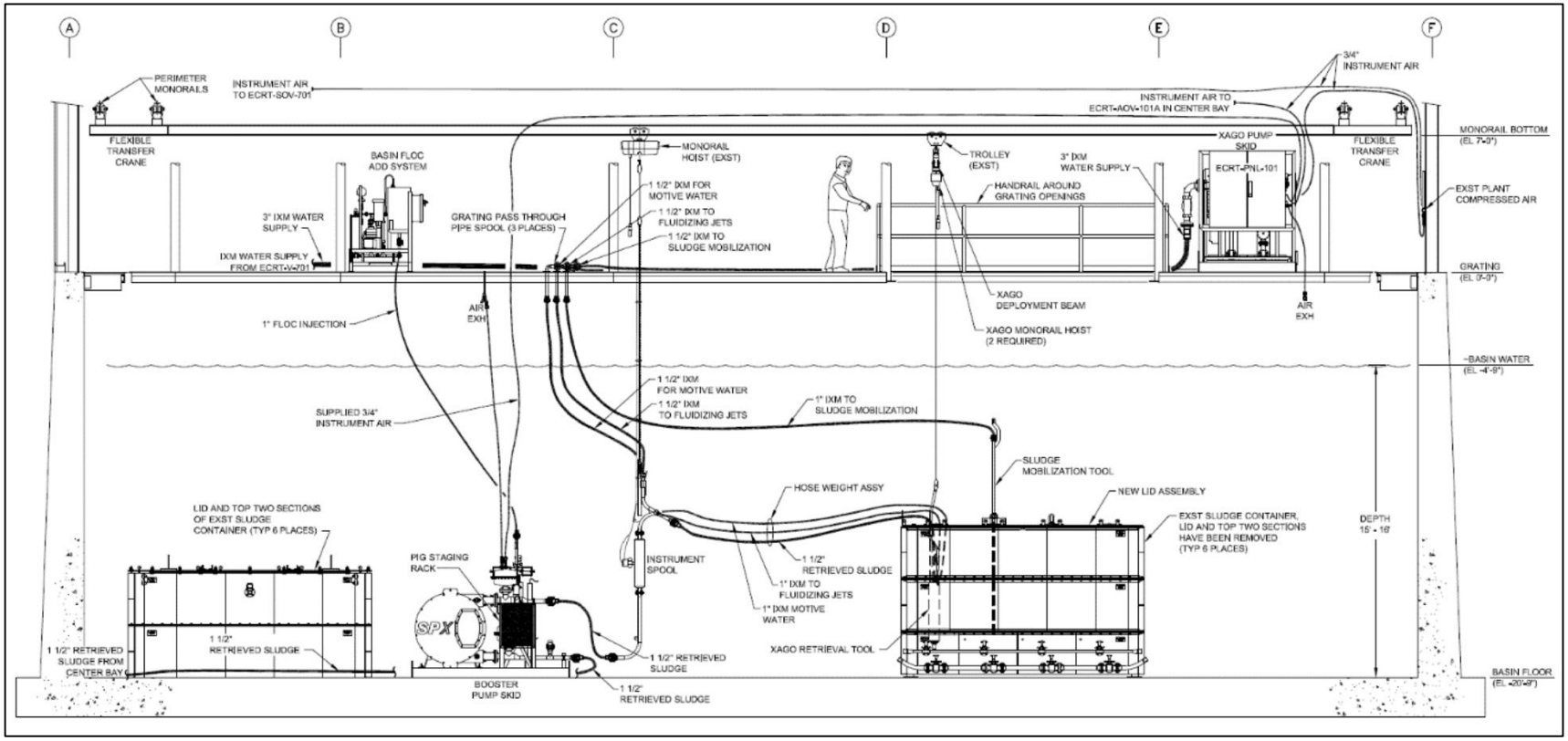

Figure 3-3. KW Basin Section at Center Bay – Looking East

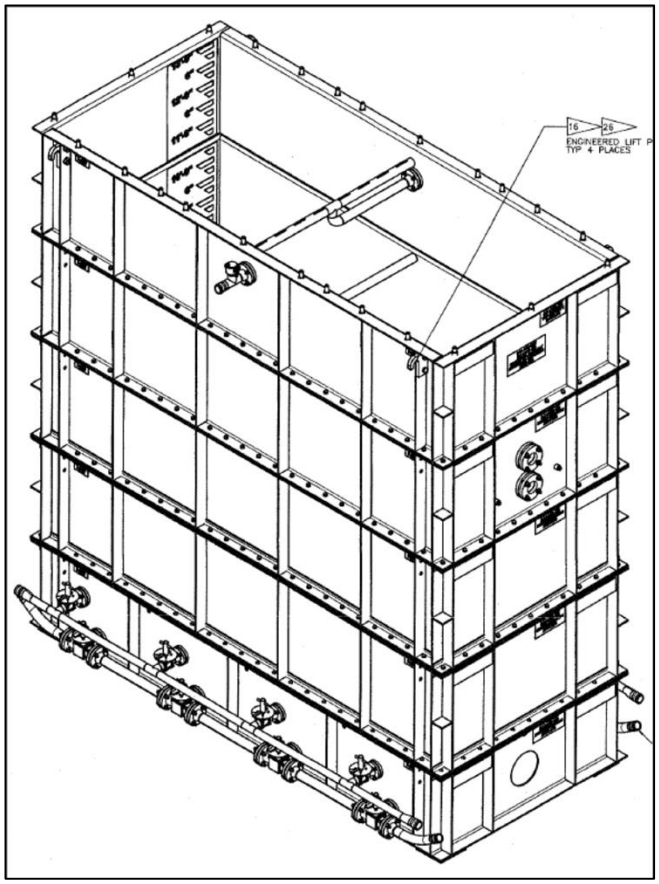

Figure 3-4. Engineered Container – Side View

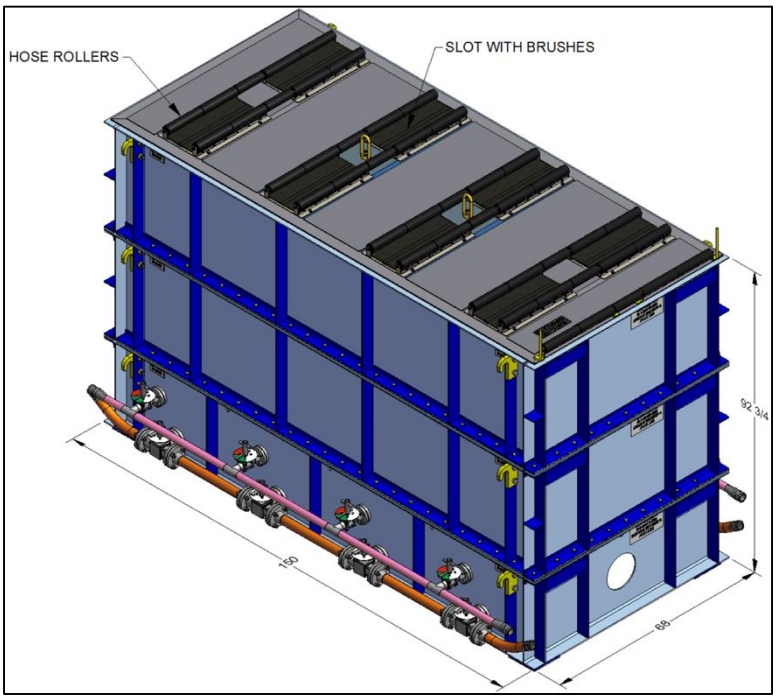

Figure 3-5. Sludge Engineered Container – After Modification (External View)

Figure 3-6. XAGO Retrieval Tool

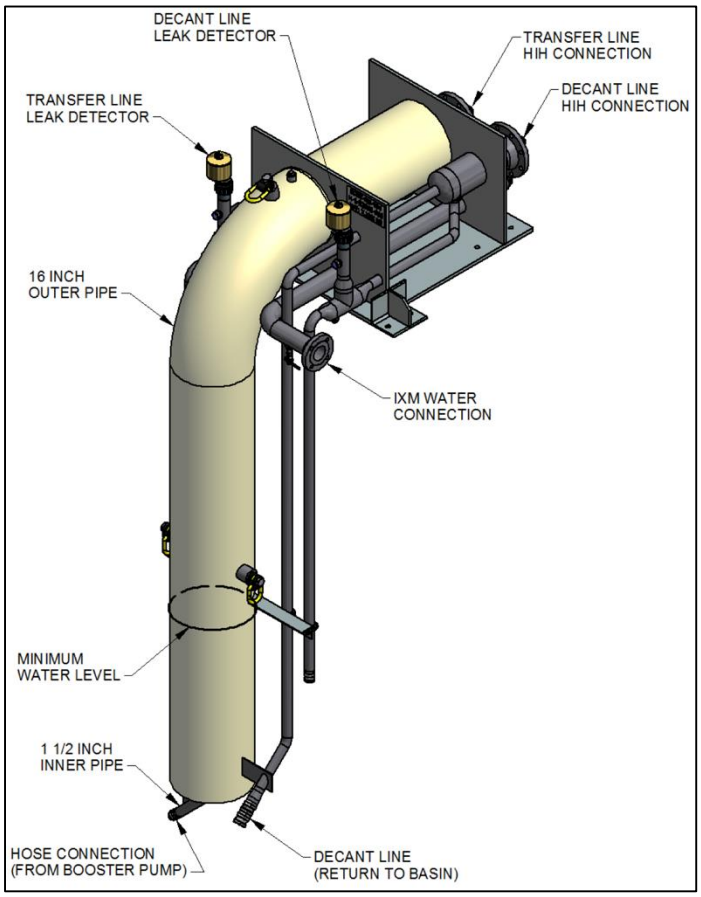

Figure 3-7. Ingress/Egress Assembly

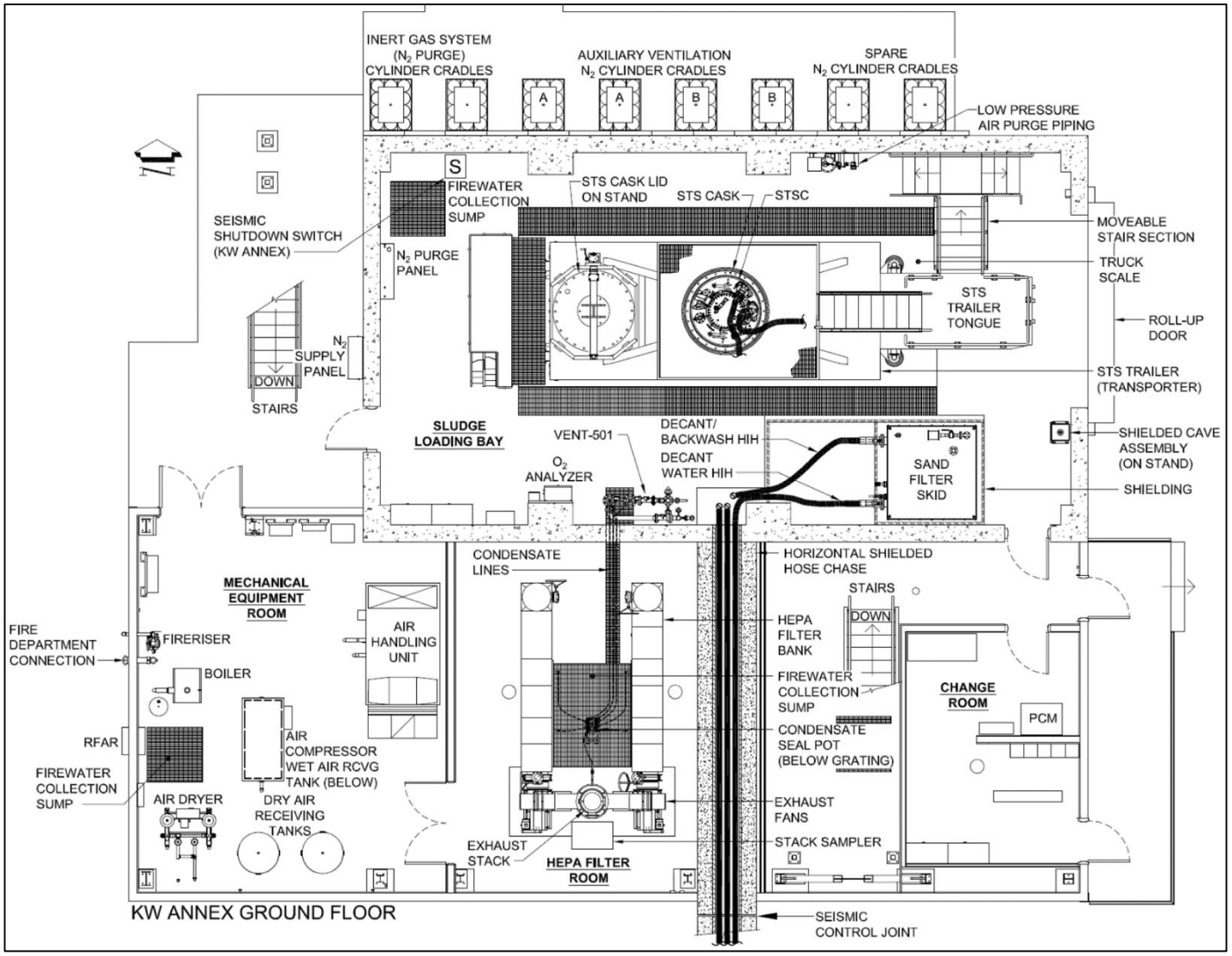

Figure 3-8. KW Annex Equipment Layout (Ground Floor)

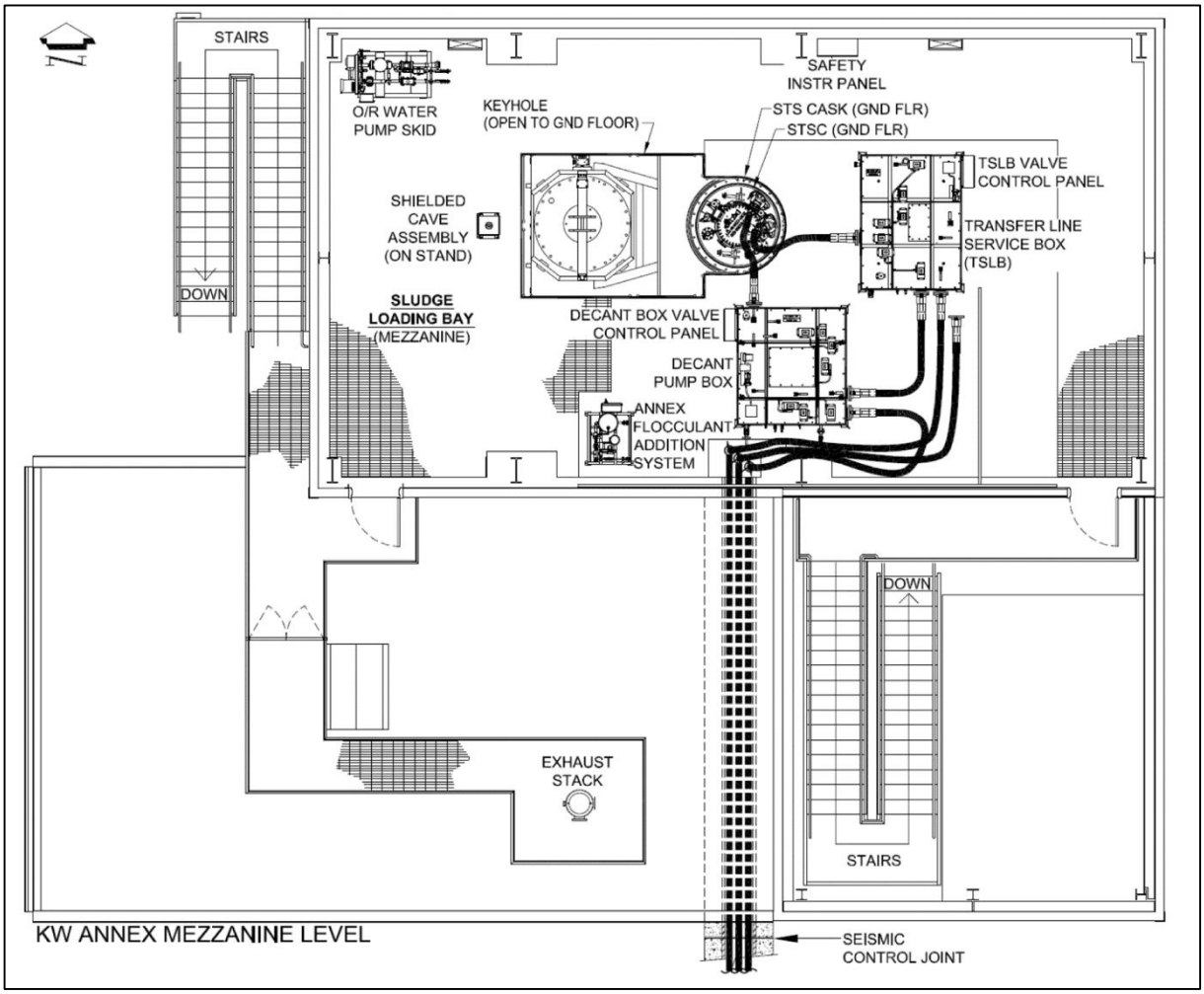

Figure 3-9. KW Annex Equipment Layout (Mezzanine)

3.3.2 Solids Settling

After filling the STSC, the sludge slurry is allowed to settle (by gravity) for at least 2 hours to concentrate the solids and clarify the supernate. The K Basins sludge streams contain a distribution of sludge particles ranging in size from 6,350 µm (0.25 in.) to submicron, and particle density ranging from 19 g/cm^3 to near 1 g/cm^3. Although flocculent will be added during the transfer of sludge from the EC into the STSC, the very small diameter particles with low density will not have sufficient time to settle completely before excess water is removed from the STSC. Therefore, supernate removed from the STSC will contain suspended solids.

The decanted supernatant can be recirculated at 75.7 L/min (20 gpm) through the decant pump and piping in the decant pump box, through the transfer line service box, and back into the STSC. A turbidity probe will be installed in the decant line to indicate if the suspended solids content in the decant stream is high. Flocculent can be added to the decanted supernate if the level of turbidity observed in the decanted supernate is greater than 1,500 nephelometric turbidity units (NTUs). Recirculation will continue until the measured turbidity of the supernate is below 1,500 NTUs. The decanted supernate is then transferred (approximately 75.7 L/min [20 gpm]) through a sand filter system to remove solids before discharging the filtered STSC supernate back into the basin (below 210 NTUs).

3.3.3 Supernate Decant and Filtration

Supernate will be removed from the STSC using a decant pump (air operated, double diaphragm) and a floating decant assembly in the STSC. The decant pump will be supplied with air at approximately 586 kPa (85 psig). The decant pump will be inside the decant pump box, located on the mezzanine level of the annex. The following supernate will be measured for turbidity:

- Supernate discharge from the STSC prior to filtration by the sand filter
- Filtered supernate downstream of the sand filter before being returned to the KW Basin

A sand filter system, used to filter the supernate discharge, is located inside a sand filter skid on the floor level of the annex. The enclosure for the sand filter is connected to the process/exhaust ventilation system. The sand filter has a vent line for air scouring that connects to the ventilation system. Exhaust from the air scouring of the sand filter will be routed to the facility emission control system.

The solids captured in the sand filter will be backwashed with water taken from the discharge of the KW Basin IXM. The backwash will be passed through the decant line and into the STSC that is being loaded, following the final retrieval batch, or when the differential pressure across the filter indicates that backwash is warranted. An air scouring unit is installed within the sand filter to assist in removing solids.

The fill and decant lines are then allowed to gravity drain into the STSC. Following sand filter backwash, IXM water will be added to the STSC to the specified fill height, and the STSC will then be prepared for transportation.

3.3.3.1 Sludge Transport and Storage Container Headspace Ventilation

During the filling and decanting, the headspace of the STSC will be ventilated by the annex process/exhaust ventilation system, which will provide adequate airflow through the STSC to prevent a deflagration by reducing the combustible gas (hydrogen) concentration to below 25 percent of its lower flammable limit. The process/exhaust ventilation system and low pressure air purge piping provide a nominal flow rate of 0.14 m^3/min (5 ft^3/min) of air into the STSC headspace.

If the process/exhaust ventilation system fails, vacuum relief valves in the system will close. The resulting low airflow rate will be sensed by a flow switch, causing a solenoid valve to open, allowing the auxiliary ventilation system consisting of compressed gas (nitrogen) to supply nitrogen to the STSC headspace for up to 96 hours. This will provide a minimal purge flow of 0.017 m^3/min (0.6 ft^3/min) into the STSC to sweep the headspace continuously with nitrogen gas. Exhaust from the process/exhaust ventilation system and the auxiliary ventilation system will be routed to the facility emission control system.

3.3.4 Sludge Transport and Storage Container, and Sludge Transport System Cask for Sludge Transportation and Storage

An STSC (depicted in Figure 3-10) is an American Society of Mechanical Engineers (ASME) Section VIII stainless steel pressure vessel with a working pressure of approximately 1,030 kPa (150 psig) and a design life of 30 years. It is a free standing vessel that is supported with a skirt. Incorporated into the design of the STSCs are nozzles for ventilating, purging, and inerting the STSC headspace. Table 3-1 provides a summary of the STSC maximum loading restrictions based on thermal and gas generation considerations (PRC-STP-00688, *Thermal and Gas Analyses for a Sludge Transport and Storage Container (STSC) During Transportation*; PRC-STP-00241, *Sludge Treatment Project-Engineered Container Retrieval and Transfer System - Thermal and Gas Analyses for Sludge Transport and Storage Container (STSC) Storage at T Plant*). In addition to the thermal and gas analysis, an evaluation was conducted of instrument setpoints, associated instrument uncertainties, and variability errors for safety significant and related instruments controlling the ECRTS process (PRC-STP-00754,

Setpoint Determination for the Sludge Treatment Project Engineered Container Retrieval and Transfer System). This setpoint analysis establishes more restrictive sludge payload limits in an STSC, which account for instrument measurement errors and design margins. Table 3-1 shows the expected number of STSCs versus the percent fill in the STSCs. The nominal number of STSCs expected to be used is 18.

After filling an STSC, weight measurements will be taken for comparison to initial tare values for final confirmation that sludge loading is within setpoint analysis limits. The air release valves will be opened in the fill and decant lines to ensure complete drainage of all liquid before disconnect. The fill and decant lines and the liquid level detector cables will be manually disconnected from the top of the STSC within glovebags. The transfer lines and nozzles on the STSC will be surveyed and decontaminated, if necessary. The lines will then be placed into the storage area in the annex mezzanine, and the STSC nozzles will be capped or flanged. The STSC will be purged with nitrogen gas to displace air, then the vent line will be manually disconnected from the STSC; two sintered metal, high-efficiency particulate air (HEPA)-type filters will be manually installed on the STSC to provide ventilation. The final STSC survey will then be conducted, and the lid will be replaced back on the STS cask (Figure 3-11).

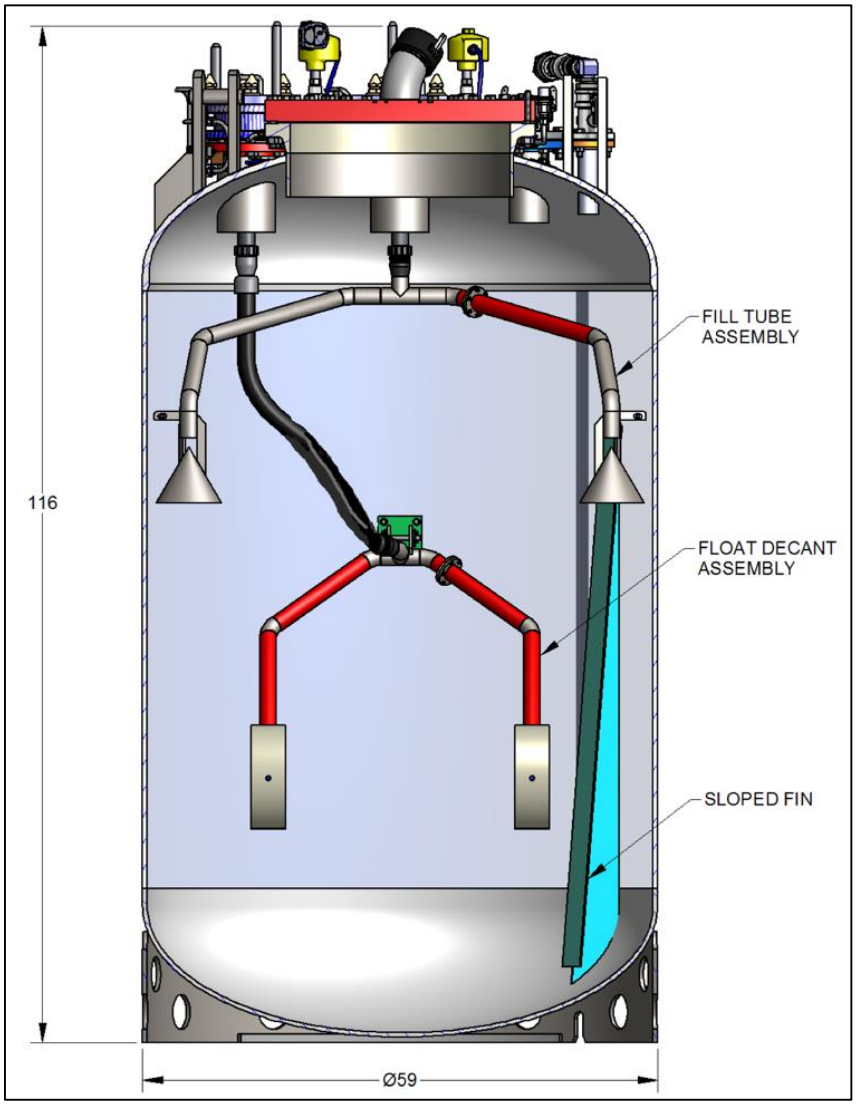

Figure 3-10. Sludge Transport and Storage Container

Table 3-1. STSC Loading Limits and Number Required for Sludge Removal

Sludge Source	Maximum Fill Volume per STSC (m^3)	At 100% Fill	At 95% Fill	At 90% Fill	At 85% Fill	At 80% Fill	At 75% Fill	At 70% Fill
Settler layered with KE Basin engineered container	0.336 1.468	13	14	14	15	16	17	18
KW Basin engineered container 210	1.336	4	4	4	4	4	5	5
KW Basin engineered container 220, combined with 25.4 L of segregated settler material	1.0 0.0254	1	2	2	2	2	2	2
Totals		**18**	**20**	**20**	**21**	**22**	**24**	**25**

Source: HNF-41051, *STP Container and Settler Sludge Process System Description and Material Balance*.

Note: Safety significant STSC liquid level and weight measurements will be used to determine when an STSC is filled. A truck scale will be used to provide the weight measurement. Liquid level measurements will be made by level detectors installed in the STSCs.

STSC = sludge transport and storage container

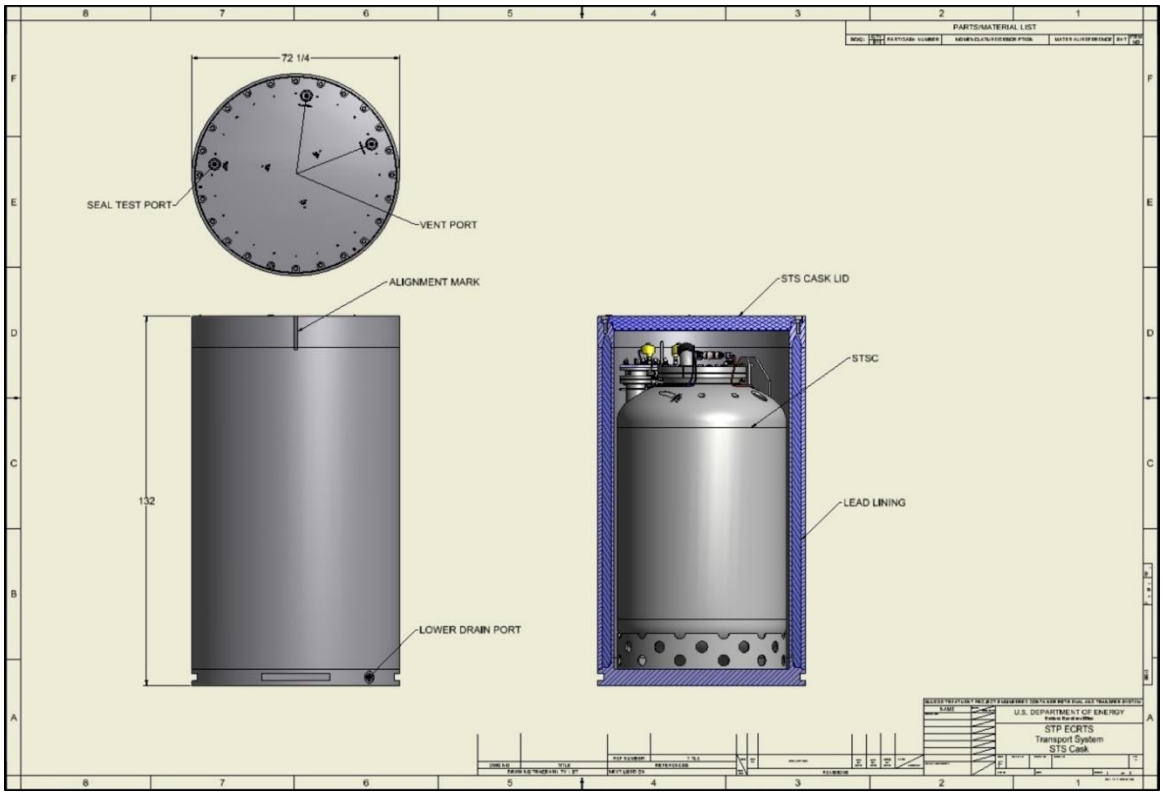

Figure 3-11. STS Cask (Internal and External View)

A nitrogen gas supply will be connected to a port on the side of the STS cask, and the exhaust ventilation will be connected to a port on the cask lid. The STS cask will be purged with nitrogen gas to satisfy the shipping safety requirements. The lid will then be secured and leak tested. After the cask has been configured, as required by the shipping safety documentation, the tractor will be reconnected to the STS trailer (Figure 3-12).

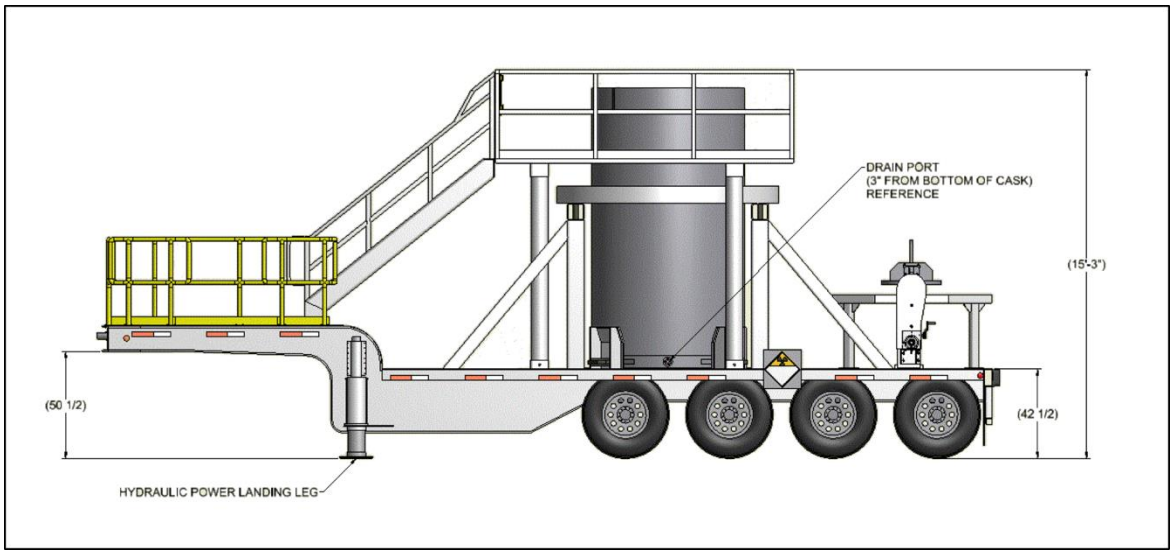

Figure 3-12. STS Trailer with STS Cask

The STS cask and loaded STSC will be transported to T Plant where the STS cask will be received, unloaded, and stored with the STSCs at T Plant. Upon receipt of the STS cask at the T Plant railroad tunnel, the STS cask will be vented and purged with nitrogen gas to sweep any hydrogen gas accumulation from the airspace and ensure that less than the lower flammability limits are achieved prior to offloading the STSC. After venting and purging the STS cask, the cask lid will be remotely removed, and the STSC will be purged with nitrogen gas through the nitrogen supply manifold (Figure 3-13) and purge panel (Figure 3-14) to ensure that less than the lower flammability limits are achieved.

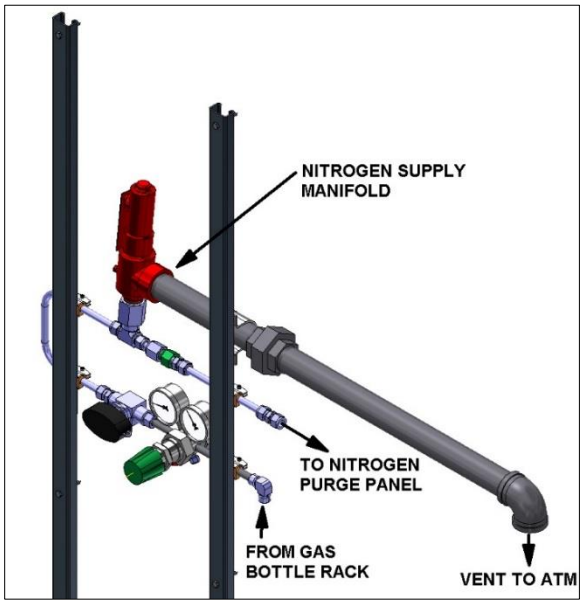

Figure 3-13. T Plant Nitrogen Supply Manifold

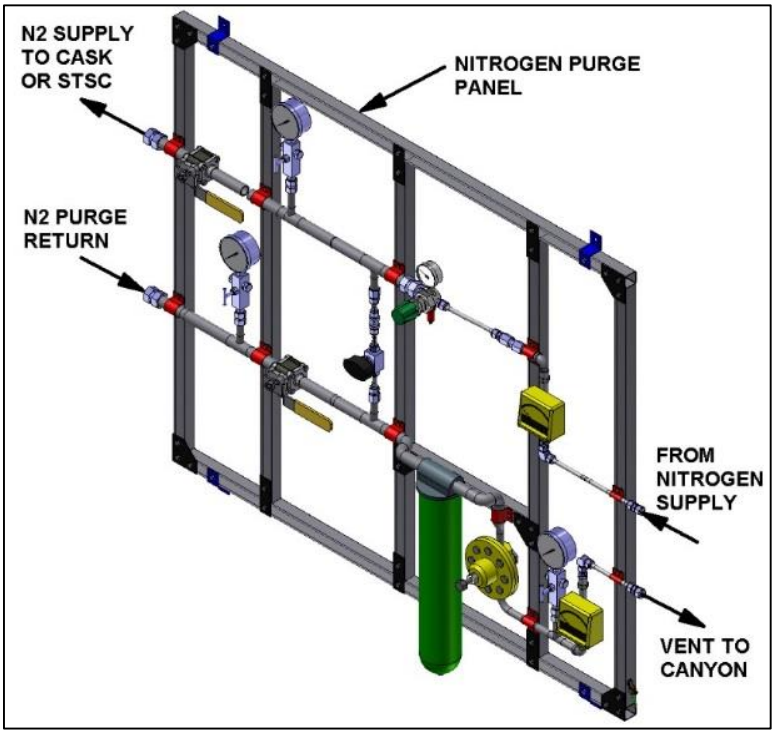

Figure 3-14. T Plant Nitrogen Purge Panel

After purging, the sintered metal vent filters will be removed, and a vent pipe will be installed on the STSC. The STSC will be remotely removed from the STS cask, weighed, and lowered into a shielded storage cell using the canyon bridge crane. Each cell will have space for up to six STSCs (Figure 3-15). Each cell will hold five loaded STSCs; the sixth location can hold an STSC overpack to contain a leaking STSC if an STSC failure were to occur. Additionally, in the event of an STSC leak, a sump pump in each cell can be used to transfer liquid into the STSC overpack.

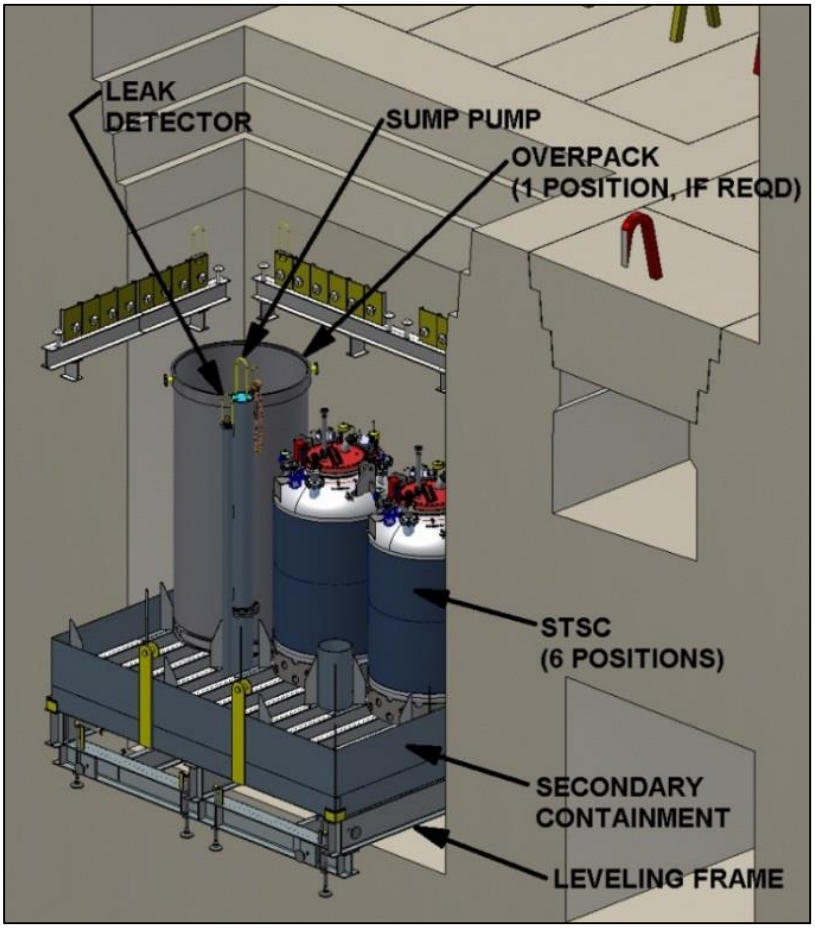

Figure 3-15. Leveling Frame, Containment System, and Storage Rack with STSCs

While in storage at T Plant, the STSCs will be monitored annually for water loss, due to evaporation using a load cell, and replenished with makeup water (Figure 3-16), as necessary, to ensure that the sludge remains in a fully wet environment to prevent drying out. During storage, headspace in the STSC will be vented with natural circulation through two vents on the STSC at different elevations. This chimney effect phenomenon is driven by the density difference between the environment and the headspace, where the gas in the environment is denser than in the headspace. The concentration of hydrogen is calculated to be less than 1 volume percent in the T Plant cells and in the headspace of the STSC through operation of the T Plant exhaust ventilation system; hydrogen concentration is not measured. If the T Plant exhaust ventilation system is inoperable, calculations show the chimney effect of the STSC vents; natural circulation of air through the T Plant cell cover blocks will also ensure that the concentration of hydrogen is maintained at less than 1 volume percent in the T Plant cells and less than 4 volume percent in the headspace of the STSC (this is due to the temperature and density differential between the STSC vents and T Plant). Accommodations for eventual retrieval of sludge from the STSCs for Phase 2 of the project have been incorporated into the design of the STSC by including a 66 cm (26 in.) diameter centrally located flange on the STSC.

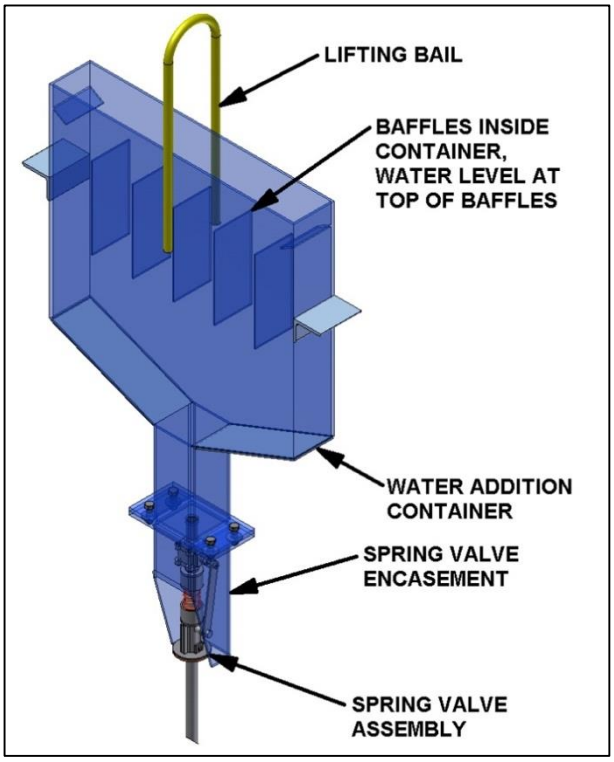

Figure 3-16. Water Addition Assembly

3.4 Recovery from an Overfilled Sludge Transport and Storage Container

If too much sludge is added to an STSC, the design of the ECRTS includes provisions whereby sludge can be retrieved from an STSC and returned to the source EC in the basin. A 10 cm (4 in.) nozzle included on the STSC for this purpose will normally be sealed and not used during STSC filling and decanting. This nozzle will be connected to the ORT (Figure 3-17), which is permanently installed inside each STSC (Figure 3-10).

Figure 3-17. STSC Overfill Recovery Tool

If excess sludge removal is necessary, the ORT will be connected to an IXM water source that provides dilution water to the ORT during sludge transfer. IXM water is supplied from the KW Basin, which is equipped with a check valve, to prevent backflow of sludge into that system. A high-pressure pump will provide fluidization water to mobilize the sludge for transfer. The ORT will be connected to the suction of an overfill recovery pump, which is connected to the hose used for transferring sludge slurry from the XAGO retrieval tool and booster pump. The overfill recovery pump is normally bypassed when sludge slurry is transferred into the STSC and is only used with the ORT. The hose connection to the booster pump will be removed to enable bypassing the booster pump and XAGO retrieval tool. A separate bypass hose will be connected to the slurry transfer line and an EC in the basin. The overfill recovery pump and associated instrumentation and valves will be contained in the transfer line service box within the annex.

The retrieval process will consist of activating the ORT to mobilize the sludge and overfill recovery pump to transfer the desired amount of sludge back into an EC in the basin. After removing the desired amount of sludge, the overfill recovery line would be flushed, the ORT would be disconnected, all connections would be sealed, and the ORT would be isolated and remain in place within the STSC. The bypass hose would be removed and stored in the basin, and the booster pump would be reconnected to the slurry transfer line. The water volume would be adjusted, and the STSC would then be prepared for shipment.

3.5 Process Drains and Effluent Collection and Disposition

Process drains associated with the ECRTS are used to collect any leakage from the components in the annex, as well as for collecting water generated from activation of the fire protection system in the annex (Figure 3-18). Potential leaks in the ECRTS process equipment or coaxial hose-in-hose transfer lines are directed to leak detectors, with the leaked slurry or supernate being routed back to the KW Basin under the water level.

3.6 Process Off-Gases, Emission Controls, and Emission Monitoring

Process off-gas vents on the STSCs and elsewhere in the ECRTS are routed into the annex process/exhaust ventilation system upstream of the emission controls and emission sampling system. Figure 3-19 shows the process vents associated with the ECRTS that contribute to overall emissions from the facility. Appendix A of this RD/RAWP provides the air monitoring plan for emissions generated by the ECRTS process vents, as well as those emissions generated by the annex ventilation system. The process/exhaust ventilation system for the annex is also the emission controls for off-gases from the process vents. The potential emissions estimated to be generated by the process vents (potential to emit) are provided in the air monitoring plan (Appendix A).

3.7 Mock-Up Testing

Full-scale testing, using sludge simulants in a relevant, nonradiological environment at the Hanford Site Maintenance and Storage Facility in the 400 Area, has demonstrated the ability to load an STSC within the required time, as described in the following documents:

- PRC-STP-TR-00412, *Test Report for Sludge Treatment Project Engineered Container Retrieval and Transfer System Integrated Retrieval and Transfer Dry Test*
- PRC-STP-TR-00514, *Test Report For Sludge Treatment Project Engineered Container Retrieval and Transfer System TRL-6 Integrated System Demonstration*
- PRC-STP-TR-00903, *Report for the Integrated Process Optimization Demonstration for the Sludge Treatment Project Engineered Container Retrieval and Transfer System*
- PRC-STP-TR-00911, *Report for Overfill Recovery Tool Optimization for the Sludge Treatment Project Engineered Container Retrieval and Transfer System*

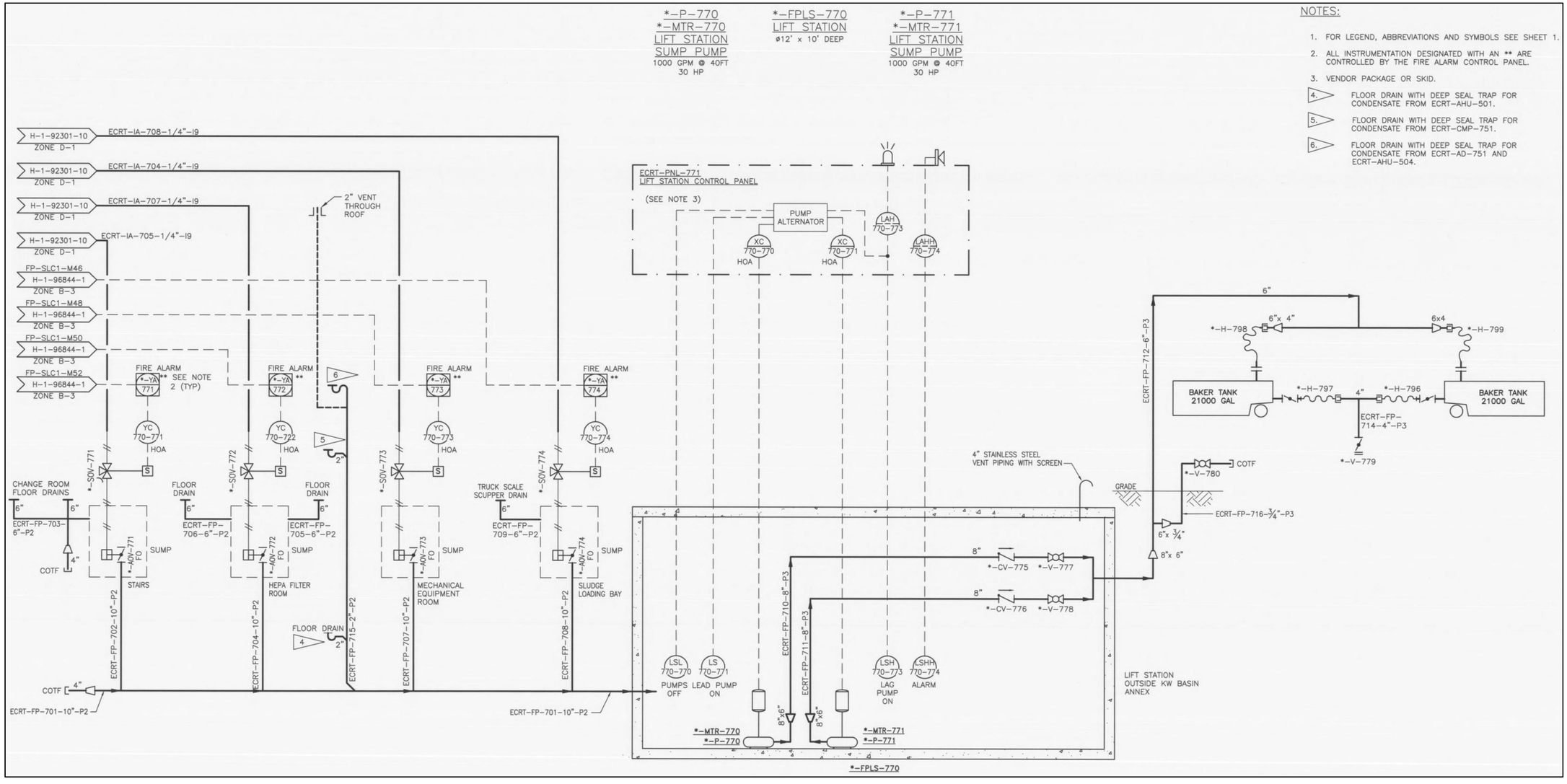

Figure 3-18. Drain Collection System

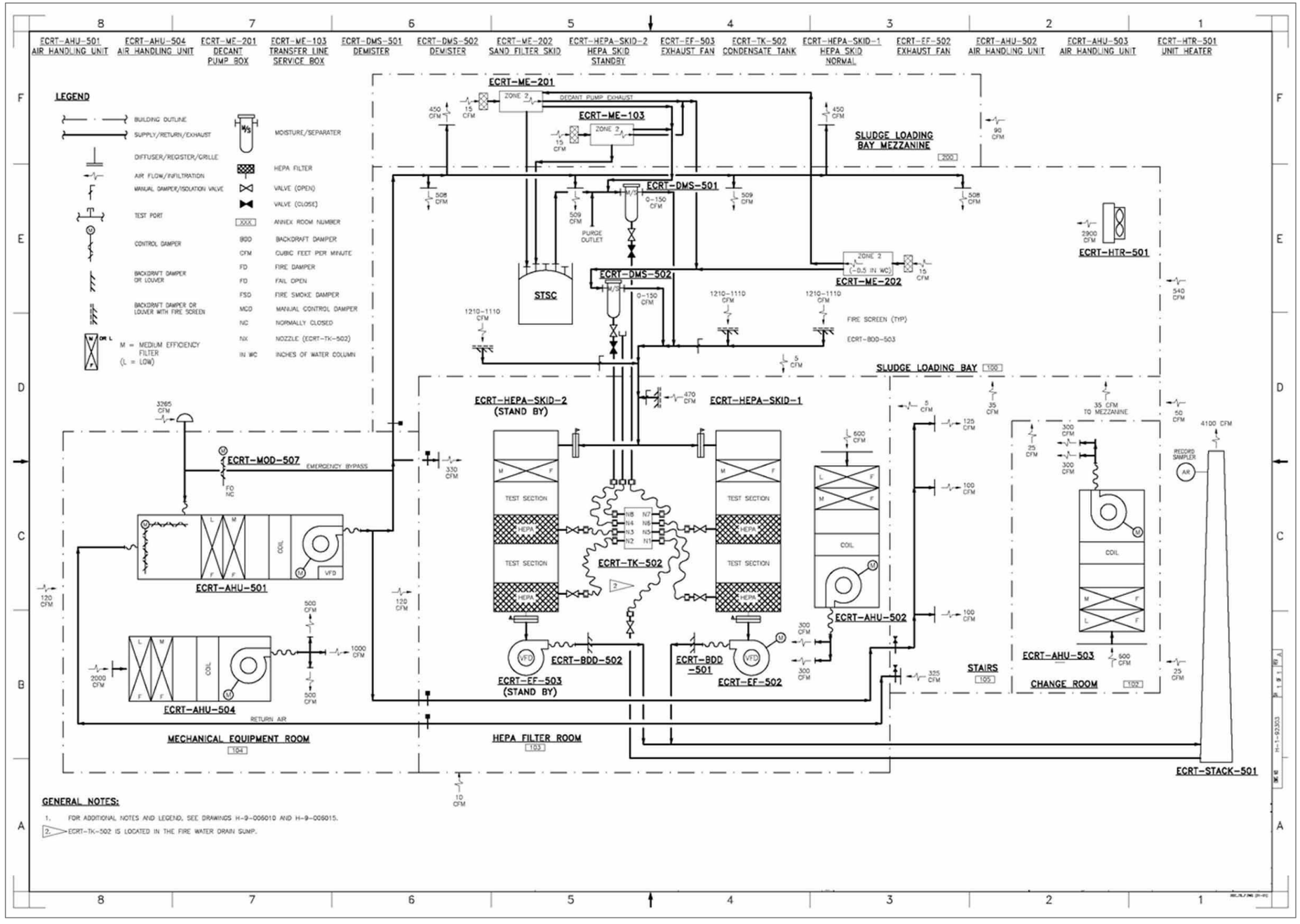

Figure 3-19. ECRTS Process and KW Basin Annex Ventilation Flow Diagram

4 Engineered Container Retrieval and Transfer System Installation and KW Annex Construction

ECRTS equipment will be installed within the KW Basin and annex. The annex modification includes installation of the ECRTS components such as transfer line service box; decant pump box; sand filter skid; truck scale; crane; STSC headspace and auxiliary ventilation systems; inert gas system; heating, ventilation, and air conditioning system; control panels; and other support equipment (Figures 3-8 and 3-9). Most of the retrieval and transfer system components will be located within the KW Basin (Figures 3-2 and 3-3).

The ingress/egress assembly shown in Figure 3-7 serves as an interface structure between the hose-in-hose transfer lines and the in-basin hoses for the transfer and decant systems, and the assembly provides the wet/dry transition for those systems. Secondary containment of the slurry transfer hose at the transition to the basin pool is provided by a 40.6 cm (16 in.) containment pipe that extends 0.9 m (3 ft) below the minimum K Basin water level. Return water from the decant/filter system is routed through a 3.8 cm (1.5 in.) pipe adjacent to the 40.6 cm (16 in.) containment pipe. The ingress/egress assembly also provides a low-point drain for both systems, including the hose-in-hose confinement annulus. A drainpipe at the low point directs potential leaks from the primary transfer and decant system lines to leak detectors, which are also mounted to the ingress/egress assembly.

A shielded concrete hose chase runs abovegrade between the KW Basin building and the annex building. The hose chase is approximately 1.5 m (5 ft) high by 1.2 m (4 ft) wide and contains the following:

- Slurry transfer line hose-in-hose: 3.8 cm (1.5 in.) inner hose, 10 cm (4 in.) outer hose
- Filtered supernate hose-in-hose: 3.8 cm (1.5 in.) inner hose, 10 cm (4 in.) outer hose
- Spare hose-in-hose (for either slurry transfer or filtered supernate): 3.8 cm (1.5 in.) inner hose, 10 cm (4 in.) outer hose
- Hose for transferring treated KW Basin water: 7.6 cm (3.0 in.)

The hoses are constructed of a synthetic rubber that is reinforced with a synthetic mesh and two-wire helix. The hose chase is heat traced and insulated for freeze protection. The hoses are designed in accordance with the applicable requirements of ASME B31.3, *Process Piping*, for normal fluid service; ASTM D380-94, *Standard Test Methods for Rubber Hose*; and RMA IP-2, *The 2009 Hose Handbook*. Requirements for the design, procurement, fabrication, testing, and inspection of the hose-in-hose transfer lines are provided in PRC-STP-00133, *Sludge Treatment Project Engineered Container Retrieval and Transfer System, Hose-in-Hose Transfer Line Specification*.

The existing lid and top two sections of the ECs will be removed and placed on the basin floor (Figure 3-2) in preparation for placement of the XAGO retrieval tool into an EC. Removal of the top two sections of the ECs ensures that sufficient water coverage is available to provide adequate shielding during all phases of sludge retrieval, including lifting and placement of the sludge retrieval tool.

A new cover will be provided for use on each EC with access ports for the XAGO retrieval tool. The new cover will minimize suspended sludge from general dispersal into the basin.

This page intentionally left blank.

5 Engineered Container Retrieval and Transfer System Operation

After system installation and before system operation, acceptance testing of the process and a startup readiness assessment will be performed to verify that the equipment, operating procedures, and personnel are ready to commence operations.

Existing process standards, as well as radiological and safety controls (which include both engineered and administrative controls), will be applied as appropriate during the work. The following hazardous condition categories (addressed in further detail in PRC-STP-00731) have been identified as potentially relevant to the ECRTS:

- Spray releases
- Hydrogen deflagration

5.1 Operational Steps

The following normal operational steps are included during the ECRTS campaign:

- Prepare the STSC for sludge transfer; connect transfer and decant hoses, ventilation system hoses, and liquid level detector cables.
- Operate the sludge retrieval system, including the sludge retrieval tool and, as necessary, the sludge mobilization tool.
- Flush the hose-in-hose transfer lines between the KW Basin and annex to minimize any significant buildup of sludge.
- Decant the supernate and filter through the sand filter to recycle to KW Basin, or recirculate the decanted supernate to the STSC with additional flocculent, as required.
- Backwash the sand filter with IXM water to remove entrained solids and return them to the STSC.
- Flush the transfer and decant lines using IXM water to minimize any significant buildup of sludge prior to disconnecting.
- Perform the final sludge quantity calculation in preparation for shipment.
- Disconnect the transfer and decant hoses and liquid level detector cables, and inert the STSC.
- Install STS cask lid, inert the STS cask, and prepare STSC/STS cask for transportation to T Plant.

Sludge will be removed from ECs, as necessary, to meet the endpoint criteria addressed in HNF-20632.

5.2 Remote Monitoring Capability

Because the annex will not be occupied while sludge is being retrieved from the ECs and transferred to STSCs in the annex, remote monitoring of system parameters and the ability to control the various operational steps are included in the design. This also includes capabilities for remote radiation monitoring of conditions inside the annex using continuous air monitors and area radiation monitors. Closed-circuit television monitoring of the annex sludge loading bay (and instruments therein) will be performed. The remote control and monitoring station will be located inside the KW Basin building, Room 20A (equipment operations center). ECRTS process parameters and data (shown in Table 5-1) will be monitored in the equipment operations center on dedicated process control panels and a data logger.

5.3 Engineered Container Retrieval and Transfer System Process Controls

Table 5-1 presents a preliminary summary of key process parameters that will be monitored and recorded during ECRTS operations.

Table 5-1. ECRTS Process Parameters

Process Parameter	Information Measured/Collected	Measurement Method/ Frequency	Data Range
Sludge Transfer	Flow rate of retrieved sludge into STSC (nominally 265 L/min [70 gpm])	Mass flow meter; data recorded automatically	Nominal 265 L/min (70 gpm)
Sludge Transfer (Differential Weight)	Weight of STSC, STS cask, and transport trailer (combined weight)	Weigh cells on truck scales; data recorded automatically	Approximately 120,000 lb
Slurry Transfer Volume	Liquid level in STSC	Level gauge, data recorded automatically	Approximately 35.6 to 228.6 cm (14 to 90 in.)
Decant Transfer	Flow rate of supernate liquid back to basin (nominally 75.7 L/min [20 gpm])	Mass flow meter; data recorded during decant operations	Nominal 75.7 L/min (20 gpm)
Sand Filter Performance	Inlet pressure, outlet pressure	Pressure gauges, data recorded during decant operations	Inlet: 25 to 50 psig Outlet: 10 to 25 psig
Overfill Recovery	Flow rate of sludge back to engineered container	Mass flow meter, data recorded during overfill recovery operations	Nominal 265 L/min (70 gpm)
Inerting	Oxygen concentration	Oxygen analyzer	Inerting STSC $\leq$0.2 vol% O_2 Inerting STS cask $\leq$0.9 vol% O_2

gpm = gallons per minute
STS = sludge transport system
STSC = sludge transport and storage container

6 Remedial Action Management Approach

This chapter describes the work elements and management approach associated with implementation of the work scope for this RD/RAWP.

6.1 Project Team

The term project team includes the individuals working to accomplish the remedial action. Accordingly, the project team includes the lead regulatory agency, DOE-RL, and the remediation manager and the site project manager, both agents of DOE. The DOE remedial project manager will also serve as the primary interface for all routine contact between the regulatory agencies and the project contractor. The project organization is described in DOE-RL and contractor project execution plans:

- **Lead regulatory agency (EPA):** EPA is the lead regulatory agency for *Comprehensive Environmental Response, Compensation, and Liability Act of 1980* (CERCLA) remediation activities at the Hanford Site, as described in the TPA (Ecology et al., 1989a), and will provide oversight for the work scope identified in this RD/RAWP.

- **Remedial project manager (DOE-RL):** DOE-RL is the governmental agency responsible for the response actions throughout the Hanford Site. DOE-RL also assigns remedial project managers to each main area and for the tasks involved with remediation activities. The remedial project manager is responsible for managing their assigned activities, which include scope, budget, schedule, and contracts.

- **Remediation contractor:** The remediation contractor is responsible for implementing the work scope, including document preparation, field, and field support activities, and overseeing qualified engineers and other experts.

6.2 Change Management

Implementation of this work scope may require changes in the requirements set forth in the K Basins Interim Action ROD (EPA/ROD/R10-99/059) and/or K Basins Interim Action ROD Amendment (EPA et al., 2005) if unexpected wastes and/or site conditions are encountered. Three types of changes in the remedial action could necessitate changes to the requirements in the ROD:

- A **fundamental change** is a change that does not meet the requirements set forth in the ROD or that incorporates remedial activities not defined in the scope of the ROD.

- A **significant change** generally involves a change to a component of a remedy that does not fundamentally alter the overall cleanup approach. All significant changes will be addressed in an explanation of significant difference.

- A **minor change** will not have a significant impact on the scope, performance, or cost of the remedy. These minor changes should be documented in the appropriate post-decision project file (e.g., through interoffice memoranda or logbooks). Nonsignificant changes will not impact the requirements of the ROD, nor will they impact the functional requirements.

In accordance with Section 9.3 of TPA Action Plan (Ecology et al., 1989b, *Hanford Federal Facility Agreement and Consent Order Action Plan*), minor changes to approved plans including this RD/RAWP that do not qualify as minor field changes can be made using the TPA change notice process.

6.3 Remedial Action Work Tasks

Remedial action work tasks for the work scope for this RD/RAWP are discussed in the following subsections.

6.3.1 Access Controls

The 100-K Area is located on the Hanford Site, which is a controlled access site. The 100-K Area has existing fencing that establishes an access control boundary to the entire site. Access controls for the KW Basin area will be maintained throughout this remedial action. Access to work areas outside of the building will be controlled using fencing and warning signs.

6.3.2 Procurement/Testing

Procurement of ECRTS components and subsystems required to implement the work scope under this RD/RAWP will be performed using a phased approach consistent with development of the remedial design. The approach includes statement of work preparation, equipment purchasing, offsite fabrication, delivery, receipt inspection, and functional testing (up to and including full-scale and integrated system testing). In some instances, long lead time items (e.g., procurement of STSCs for ECRTS) may be procured and offsite fabrication may be initiated before the remedial design for the entire system is complete. Similarly, for items where the outcome of the final design has little or no bearing on the component (e.g., off-the-shelf items), procurement may be performed before the remedial design is complete.

6.3.3 Construction

The following subsections outline the key activities associated with construction related work.

6.3.3.1 Pre-Mobilization

Prior to mobilization for each remedial action task, documentation to support the work control for that task will be prepared. Job safety analyses, radiological work permits (RWPs), ALARA reviews, operational and test procedures, and other work control forms will be prepared for major aspects of the remedial action, as appropriate.

6.3.3.2 Mobilization

Mobilization activities are required for modification of the KW Basin fuel transfer system annex and deployment/installation of equipment to support the retrieval of sludge stored in ECs.

Site preparation for these activities may require site grading and/or addition of base material, installation of temporary barriers and signs, and establishment and erection of temporary equipment.

6.3.3.3 KW Basin Fuel Transfer System Annex

The KW Basin fuel transfer system annex has been modified to support a facility to load sludge into STSCs and prepare the containers for transport to T Plant (as discussed in Section 3.3.5). The location for the new KW annex is on the north side of the KW Basin. Figures 3-8 and 3-9 show the KW annex equipment layout.

6.3.3.4 Control of Fugitive Dust

Operations outside of the KW Basin, including construction of the KW Basin fuel transfer system annex modification, delivery of raw materials, and equipment deployment, may create fugitive dust. The application of water or other commercially available dust suppressants via trucks, hoses, and misting equipment will be used, as necessary, to control dust in work areas.

6.3.3.5 Control of Air Emissions

The KW Basin fuel transfer system annex modification may use portable and temporary diesel fueled engines and/or generators that are EPA Tier 2 or 3 certified. Operation of diesel fueled engines and/or generators would be expected to emit small quantities of sulfur dioxide, nitrogen dioxide, particulates, and other pollutants to the atmosphere that are typical of similar sized construction projects. These releases would not be expected to cause the exceedance of any air quality standards because low sulfur diesel fuel will be used as best available control technology for toxics. Idling of diesel engines will be minimized to the extent practicable.

Activities that may generate radioactive air emissions will be confined to the interior of the KW Basin and the KW Basin fuel transfer system annex and will be implemented as described in Section 7.1.1.

6.3.3.6 Demobilization

After completion of the construction related work scope addressed in this RD/RAWP, wastes generated will be packaged for transport and/or disposal. Temporary access controls to the KW Basin will be maintained, as appropriate.

6.3.3.7 Sampling and Analysis Plans

Sampling and analysis plans (SAPs) used for the work scope addressed in this RD/RAWP will be developed using the guidance provided in EPA/600/R-96/055, *Guidance for the Data Quality Objectives Process* (EPA QA/G-4), and will address quality assurance (QA) in accordance with EPA/240/B-01/003, *EPA Requirements for Quality Assurance Project Plans* (EPA QA/R-5). SAPs have previously been developed for use collecting data to support the characterization of debris, floor, pit, and settler tank sludge material stored in ECs. Additional SAPs or revisions to existing SAPs may be required during this project to characterize waste streams, as necessary, to support operations and for deactivation of the transfer and treatment equipment. New SAPs and revisions to existing SAPs are subject to review and approval by DOE and EPA.

6.3.4 Institutional Controls Plan

DOE has developed a Hanford Site institutional controls plan (DOE/RL-2001-41, *Sitewide Institutional Controls Plan for Hanford CERCLA Response Actions and RCRA Corrective Actions*) that integrates the sitewide requirements and further specifies additional requirements for specific locations identified in RODs. Institutional controls will be implemented as described in the sitewide plan for the 100-KR-2 OU.

6.3.5 Spill Minimization and Response Program

Hazardous materials handled and used (e.g., diesel fuel for equipment), and the wastes generated during work performed under this RD/RAWP, will be stored and handled in a safe manner to minimize the potential for spills. Any spills of such hazardous substances will be responded to in a manner that is consistent with existing contractor procedures for spill response. Notifications for release of hazardous substance(s) into the environment will be performed in accordance with 40 CFR 302, “Designation, Reportable Quantities, and Notification.”

6.3.6 Reporting

Progress reporting will be accomplished using existing forums, which include monthly project manager meetings and quarterly TPA (Ecology et al., 1989a) milestone review meetings.

An operations and maintenance plan is not relevant to the work performed under this RD/RAWP.

This page intentionally left blank.

7 Environmental Management and Controls

This chapter describes environmental management approaches and controls that will be implemented for the work scope addressed in this RD/RAWP.

7.1 Air Emissions

The planned activities covered under this RD/RAWP have the potential to generate both radioactive and criteria/toxic airborne emissions.

7.1.1 Radiological Air Emissions

In accordance with 40 CFR 61, "National Emission Standards for Hazardous Air Pollutants," Subpart H, "National Emission Standards for Emissions of Radionuclides Other Than Radon from Department of Energy Facilities," radionuclide airborne emissions for the facility will be controlled, so the 10 mrem/yr site standard is not exceeded. The same regulation addresses point sources (i.e., stacks or vents) emitting radioactive airborne emissions, requiring monitoring of such sources with a major potential for radioactive airborne emissions, and requiring periodic confirmatory measurement sufficient to verify low emissions from such sources with a minor potential for emissions. Washington State implementing regulations, adopt Subpart H by reference. WAC regulations also require added control of radioactive airborne emissions where economically and technologically feasible (WAC 246-247-040, "Radiation Protection—Air Emissions," "General Standards").

The substantive aspects of these regulations, ALARA control technology, based on best or reasonable control technology, will be addressed by ensuring that applicable emission control technologies (those successfully operated in similar applications) will be used when economically and technologically feasible (i.e., based on cost/benefit). Additionally, the substantive aspect of the requirements for monitoring fugitive or nonpoint sources emitting radioactive emissions (WAC 246-247-075(8), "Monitoring, Testing and Quality Assurance") will be addressed by sampling ambient air, as appropriate, using reasonable and effective methods.

The work performed under this RD/RAWP will be evaluated for potential-to-emit radionuclides from any point source or diffuse/fugitive source. To accomplish this, the total unabated potential release (in curies) will be determined, and the annual dose to the maximally exposed offsite individual will be calculated using the DOE guidance for calculating potential-to-emit radiological releases and doses (DOE/RL-2006-29, *Calculating Potential-to-Emit Radiological Releases and Doses*). Based on potential to emit, appropriate emission monitoring and controls will be incorporated in the remedial design.

Monitoring of fugitive and diffuse emissions with applicable QA will be provided, reflecting the substantive requirements of WAC 246-247-075(8). Near-facility monitors and radiological field surveys are sufficient to meet the continuous monitoring requirement.

Ambient air monitoring in the K Basins site will use the Hanford Site Near-Facility Monitoring Program, described in DOE/RL-91-50, *Hanford Site Environmental Monitoring Plan*, to monitor ambient air quality, as impacted by localized fugitive/diffuse radionuclide emissions. This existing network of near-facility ambient air monitoring stations is maintained in the 100-K Area to address DOE requirements (as described in the referenced plan) that are separate from requirements under this planned demolition and removal. The latest 100-K Area near-facility monitoring network includes an arc of six currently operating air monitoring stations near the K Basins within a radius of roughly 500 m (1,641 ft) from the footprint of the combined facilities, as shown in Figure 7-1. One far-field monitoring station (N900) is also used for near-facility monitoring purposes. While additional adjustment of the number or locations for near-facility monitoring stations may occur to support the Near-Facility Monitoring

Program, it will be ensured that no less than three of these air monitoring stations will remain within the 100-K Area as part of the Near-Facility Monitoring Program during completion of the work scope under this RD/RAWP. Figure 7-1 shows the locations for each of the ambient air monitors.

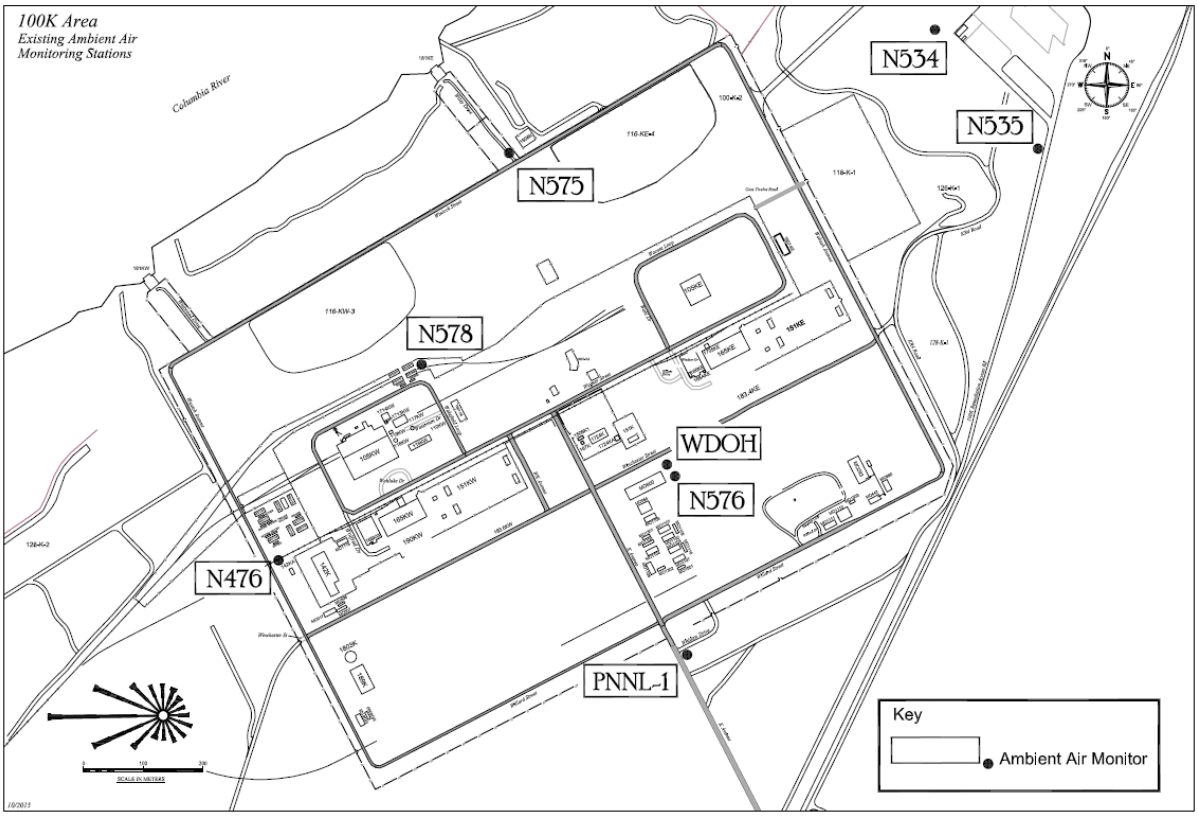

Figure 7-1. Ambient Air Monitoring Stations in K Basins Area

Ambient air monitors will follow the protocol established for the Near-Facility Monitoring Program on the Hanford Site, as appropriate. The air samples are collected every 2 weeks and analyzed for total alpha and total beta. These samples are also composited semiannually and analyzed for gamma energy-emitting radionuclides, strontium-90, isotopic uranium, and isotopic plutonium. The data results are then entered into the Hanford Site Environmental Information System or the Automated Bar Coding of Air Samples at Hanford database for recordkeeping and reporting purposes.

Samples from the far-field monitor are currently analyzed every 2 weeks for total alpha and total beta, and analyzed every 4 weeks for tritium. The Pacific Northwest National Laboratory (PNNL) air samples are composited every quarter with the other 100 Area PNNL air samples, and the samples are analyzed for strontium-90, plutonium-238, plutonium-239, and gamma scan. The data results are entered into the Hanford Environmental Information System database.

The data from these specific monitors will be summarized in the annual report that is prepared for the Hanford Site.

The air monitoring plan for this project is provided in Appendix A of this RD/RAWP.

7.1.2 Criteria/Toxic Air Emissions

Criteria/toxic air pollutants are anticipated to be well below acceptable source impact levels. This is based on the characterization of the sludge and the nature of the operations associated with the processing and retrieval of the material. Any emissions from the use of portable and temporary diesel engines are addressed in Section 6.3.3.5. Idling of diesel engines will be minimized to the extent practicable.

7.1.3 Asbestos

Asbestos abatement activities will be performed in full compliance with all substantive 40 CFR 61, "National Emission Standards for Hazardous Air Pollutants" (NESHAP) standards that are ARAR for the work performed. Prior to the commencement of the demolition, a thorough inspection of the affected facility will be performed for the presence of asbestos, including Category I and Category II nonfriable asbestos-containing material (ACM). All Category II nonfriable ACM will generally be presumed to be potentially friable and will be removed prior to the start of actual demolition activities. If DOE identifies any Category II ACM that should be allowed to remain in place during demolition (based on knowledge that the demolition will not render it friable), information identifying the planned demolition approach and describing how the Category II ACM will not become crumbled, pulverized, or reduced to powder by the forces expected to act on it during the demolition or otherwise friable will be provided in advance to EPA for approval. Category I nonfriable ACM will also be removed prior to the start of actual demolition activities, except in situations where demolition practices will be used that can be or have been demonstrated to the satisfaction of EPA to not render the Category I ACM friable, consistent with NESHAP (40 CFR 61) standards. Demonstration can be performed using existing EPA or Washington State guidance regarding asbestos abatement under NESHAP; such Category I nonfriable ACM must not be in poor condition, and planned demolition activities must not subject the ACM to sanding, grinding, cutting, or abrading. In all cases, ACM that is either friable or cannot be demonstrated to remain nonfriable during demolition will be removed prior to such demolition, as required by NESHAP.

7.2 Waste Management

SNF-9430, *Waste Management Plan for the K Basins Interim Remedial Action*, will be used for work performed under this RD/RAWP. The plan identifies the substantive waste management requirements and the strategy for their implementation and the anticipated waste types.

7.3 Cultural/Historic/Ecological Resources

Cultural and historical reviews have been performed to identify properties that may be eligible for listing on the National Register of Historic Places. The 105-KW Building, including the storage basin, is a "contributing property with no individual documentation required" (DOE/RL-97-02, *National Register of Historic Places Multiple Property Documentation Form – Historic, Archaeological and Traditional Cultural Properties of the Hanford Site, Washington*). The work scope covered by this RD/RAWP has no impact on cultural or historical properties, nor will any ground-disturbing activities take place in areas that have not been disturbed in past construction activities. Therefore, artifacts are not anticipated. Ecological resource reviews are performed periodically based on an assessment of response actions occurring at the 100-K Area. No planned activities for this project will occur in previously undisturbed areas. Systems and structures planned for the retrieval, packaging, and transport of sludge are designed pursuant to ARARs to protect the environment.

7.4 Leaks, Spills, and Condensate

Leaks and spills from the ECRTS process within the KW Basin and the transfer corridor from the KW Basin to the annex are precluded by engineering controls. These controls consist of a design that uses a hose-in-hose concept, which consists of an inner hose used to contain the sludge slurry and an outer hose that will contain any leakage if the inner hose would leak. The decant water being returned to the basin is also likewise contained in an inner hose that is contained within an outer hose (i.e., complete secondary containment).

Leak detectors are incorporated into the design of the above-basin transfer lines to detect a leak between the inner and outer hose, as well as incorporated into the design of the transfer box, decant box, and sand filter enclosure.

The horizontal shielded hose chase, transfer line service box, decant pump box, and sand filter skid have gravity-drain sumps with alarmed leak detectors that annunciate on area control panels to ensure operator response. The transfer line service box sump leak detector activates interlock I-1 (safety shutdown) in the event that a leak is detected, because the leak could potentially be sludge slurry. The preliminary documented safety analysis (PRC-STP-00718) provides additional details. Discharge from the sand filter sump pump is routed to the KW Basin.

The discharge from the transfer box and decant pump box sump pumps can be routed to the KW Basin or the STSC.

Condensate from moisture separators associated with the off-gases from various process vents is not expected; however, a 75.7 L (20 gal) collection tank is provided to collect any condensate, should it occur. The collected condensate would be returned to the KW Basin. Water collected in drains and sumps in the change room, HEPA filter room, mechanical equipment room, and sludge loading bay within the annex would be collected in a 12,500 L (3,300 gal) lift station outside of the annex building. The collected water would then be transferred to two 79,493.6 L (21,000 gal) Baker tanks for interim storage prior to transfer to the Hanford Site 200 East Area Effluent Treatment Facility/Liquid Effluent Retention Facility (or other approved facility) for treatment and disposal. If the annex fire suppression system is activated, air-operated butterfly valves in each sump would open, allowing water to gravity drain to the 12,500 L (3,300 gal) exterior lift station. Figure 3-18 provides a diagram of the drain collection system.

7.5 Safety and Health Program

A health and safety plan (HASP) that addresses the work scope identified in this RD/RAWP has been prepared and is maintained by the project (HNF-4747, *100K West Basin - Deactivation Health and Safety Plan*). The HASP addresses chemical, radiological, and physical hazards and specifies controls and requirements for work activities. Access and work activities are controlled in accordance with approved work packages, as required by established internal work requirements and processes. The HASP addresses the health and safety hazards of each phase of site operation and includes the requirements for hazardous waste operations and/or construction activities (29 CFR 1910.120, “Occupational Safety and Health Standards,” “Hazardous Waste Operations and Emergency Response”). As part of work package development, a job or activity hazards analysis will be written (in addition to the HASP) to identify the hazards associated with specific tasks.

In addition to the HASP, RWPs will be prepared as needed for work in areas with potential radiological hazards. The RWP extends the Radiological Protection Program to the specific work site or operation. All personnel assigned to the project and all worksite visitors will strictly adhere to the provisions

identified in the HASP and RWP. Before work and before each activity begins, a pre-job briefing will be held with the involved workers. This briefing will include reviews of the hazards that could be encountered and the associated requirements. Throughout an activity, daily briefings may also be held, as well as special briefings before major evolutions.

7.6 Quality Assurance Program

QA is implemented in accordance with contractor-approved internal work requirements and processes, which, in turn, implement DOE O 414.1D Admin Chg 1, *Quality Assurance*; 10 CFR 830, "Nuclear Safety Management," Subpart A, "Quality Assurance Requirements;" and DOE/RL-96-68, *Hanford Analytical Services Quality Assurance Requirements Document* (HASQARD). Applicable SAPs also include the quality requirements applicable to work performed using a graded approach.

These QA requirements are augmented by additional provisions, as follows:

- ECRTS design activities associated with the transuranic (TRU) waste program (e.g., waste characterization, certification, and transportation of RH-TRU waste for disposal at the WIPP) are subject to additional requirements prescribed by the DOE/Carlsbad Field Office and are described in DOE/WIPP-02-3122, *Transuranic Waste Acceptance Criteria for the Waste Isolation Pilot Plant*, Section 5.0, "Quality Assurance Requirements."

- Sludge sampling and sludge characterization activities are also subject to the requirements prescribed by HNF-23333, *Environmental Quality Assurance Plan*.

This page intentionally left blank.

8 Remedial Action Completion

Completion of the sludge removal activities identified in this RD/RAWP will be achieved by meeting the endpoint criteria specific to this work scope.

8.1 Endpoint Criteria

Endpoint criteria for the sludge removal activities identified in this RD/RAWP are described in HNF-20632. The qualified process that describes the plan by which work will be performed to satisfy the endpoint criteria is identified in DOE/RL-2010-107, *105-K West Basin Qualified Process and Plan to Satisfy End-Point Criteria (Fuel, Sludge, and Below-Water Debris)*.

8.2 Project Closure Documentation

Project closure documentation will be prepared to record completion of the work scope identified in this RD/RAWP. The documentation will describe the activities performed to meet the endpoint criteria and achievement of the RAOs identified in Section 2.2.

This page intentionally left blank.

9 Milestones, Cost, and Schedule

Modifications to the TPA (Ecology et al., 1989a) milestone schedule relevant to activities described in this RD/RAWP are presented in Table 9-1.

Table 9-1. Summary of Relevant Tri-Party Agreement Milestones

Milestone	Description	Schedule
M-016-177	Complete 105-KW sludge transfer equipment installation	September 30, 2017
M-016-175	Begin sludge removal from 105-KW fuel storage basin	September 30, 2018
M-016-176	Complete sludge removal from 105-KW fuel storage basin	December 31, 2019

Table 9-2 summarizes the key schedule elements for the planned work under this RD/RAWP.

Table 9-2. Estimated Cost and Schedule

Activity	Estimated Cost	Schedule
Complete sludge removal from the KW Basin	$800 million	December 31, 2019

This page intentionally left blank.

10 References

10 CFR 20, "Standards for Protection Against Radiation," *Code of Federal Regulations*. Available at: http://www.ecfr.gov/cgi-bin/text-idx?SID=47595c6d120419a8d441b996c919cbb6&mc=true&node=pt10.1.20&rgn=div5.

10 CFR 61, "Licensing Requirements for Land Disposal of Radioactive Waste," *Code of Federal Regulations*. Available at: http://www.ecfr.gov/cgi-bin/text-idx?SID=47595c6d120419a8d441b996c919cbb6&mc=true&node=pt10.2.61&rgn=div5.

61.40, "General Requirement."

10 CFR 830, "Nuclear Safety Management," Subpart A, "Quality Assurance Requirements," *Code of Federal Regulations*. Available at: http://www.ecfr.gov/cgi-bin/text-idx?SID=47595c6d120419a8d441b996c919cbb6&mc=true&node=pt10.4.830&rgn=div5#sp10.4.830.a.

10 CFR 834, "Radiation Protection of the Public and the Environment" (proposed in 58 FR 16268), *Code of Federal Regulations*. Available at: https://www.federalregister.gov/r/1901-AA38.

10 CFR 835, "Occupational Radiation Protection," *Code of Federal Regulations*. Available at: http://www.ecfr.gov/cgi-bin/text-idx?SID=47595c6d120419a8d441b996c919cbb6&mc=true&node=pt10.4.835&rgn=div5.

29 CFR 1910.120, "Occupational Safety and Health Standards," "Hazardous Waste Operations and Emergency Response," *Code of Federal Regulations*. Available at: http://www.ecfr.gov/cgi-bin/text-idx?SID=47595c6d120419a8d441b996c919cbb6&mc=true&node=pt29.5.1910&rgn=div5#se29.5.1910_1120.

40 CFR 61, "National Emission Standards for Hazardous Air Pollutants," *Code of Federal Regulations*. Available at: http://www.ecfr.gov/cgi-bin/text-idx?SID=47595c6d120419a8d441b996c919cbb6&mc=true&node=pt40.9.61&rgn=div5.

61.92, "Standard."

61.93, "Emission Monitoring and Test Procedures."

61.145, "Standard for Demolition and Renovation."

61.150, "Standard for Waste Disposal for Manufacturing, Fabricating, Demolition, Renovation, and Spraying Operations."

Subpart H, "National Emission Standards for Emissions of Radionuclides Other Than Radon from Department of Energy Facilities.

40 CFR 190, "Environmental Radiation Protection Standards for Nuclear Power Operations," *Code of Federal Regulations*. Available at: http://www.ecfr.gov/cgi-bin/text-idx?SID=47595c6d120419a8d441b996c919cbb6&mc=true&node=pt40.25.190&rgn=div5.

40 CFR 191, "Environmental Radiation Protection Standards for Management and Disposal of Spent Nuclear Fuel, High-Level and Transuranic Radioactive Wastes," *Code of Federal Regulations*. Available at: http://www.ecfr.gov/cgi-bin/text-idx?SID=47595c6d120419a8d441b996c919cbb6&mc=true&node=pt40.25.191&rgn=div5.

40 CFR 268, "Land Disposal Restrictions," *Code of Federal Regulations*. Available at: http://www.ecfr.gov/cgi-bin/text-idx?SID=47595c6d120419a8d441b996c919cbb6&mc=true&node=pt40.27.268&rgn=div5.

40 CFR 300, "National Oil and Hazardous Substances Pollution Contingency Plan," *Code of Federal Regulations*. Available at: http://www.ecfr.gov/cgi-bin/text-idx?SID=47595c6d120419a8d441b996c919cbb6&mc=true&node=pt40.28.300&rgn=div5.

40 CFR 302, "Designation, Reportable Quantities, and Notification," *Code of Federal Regulations*. Available at: http://www.ecfr.gov/cgi-bin/text-idx?SID=47595c6d120419a8d441b996c919cbb6&mc=true&node=pt40.28.302&rgn=div5.

40 CFR 761, "Polychlorinated Biphenyls (PCBs) Manufacturing, Processing, Distribution in Commerce, and Use Prohibitions," *Code of Federal Regulations*. Available at: http://www.ecfr.gov/cgi-bin/text-idx?SID=47595c6d120419a8d441b996c919cbb6&mc=true&node=pt40.31.761&rgn=div5.

40 CFR 761.1, "Applicability."

40 CFR 761.50, "Applicability."

40 CFR 761.61, "PCB Remediation Waste."

40 CFR 791.79, "Decontamination Standards and Procedures."

49 CFR 171, "General Information, Regulations, and Definitions," *Code of Federal Regulations*. Available at: http://www.ecfr.gov/cgi-bin/text-idx?SID=47595c6d120419a8d441b996c919cbb6&mc=true&node=pt49.2.171&rgn=div5.

Archeological and Historic Preservation Act of 1974, Pub. L. 93-291, as amended, 16 USC 469a-1 – 469a-2(d). Available at: http://www.nps.gov/history/local-law/fhpl_archhistpres.pdf.

ASME B31.3, 2014, *Process Piping*, American Society of Mechanical Engineers, New York, New York.

ASTM D380-94, 2012, *Standard Test Methods for Rubber Hose*, ASTM International, West Conshohocken, Pennsylvania.

Atomic Energy Act of 1954, as amended, 42 USC 2011, Pub. L. 83-703, 68 Stat. 919. Available at: http://epw.senate.gov/atomic54.pdf.

Clean Air Act of 1990, Pub. L. 101-549, as amended, 42 USC 7401, et seq. Available at: http://www.epa.gov/air/caa/.

Comprehensive Environmental Response, Compensation, and Liability Act of 1980, 42 USC 9601, et seq., Pub. L. 107-377, December 31, 2002. Available at: http://epw.senate.gov/cercla.pdf.

DOE O 414.1D Admin Chg 1, 2011, *Quality Assurance*, U.S. Department of Energy, Washington, D.C. Available at: https://www.directives.doe.gov/directives-documents/400-series/0414.1-BOrder-d-admchg1.

DOE/RL-91-50, 2013, *Hanford Site Environmental Monitoring Plan*, Rev. 6A, U.S. Department of Energy, Richland Operations Office, Richland, Washington. Available at: http://pdw.hanford.gov/arpir/index.cfm/viewDoc?accession=1503160460.

DOE/RL-96-17, 2009, *Remedial Design Report/Remedial Action Work Plan for the 100 Area*, Rev. 6, U.S. Department of Energy, Richland Operations Office, Richland, Washington. Available at: http://pdw.hanford.gov/arpir/index.cfm/viewDoc?accession=0095436.

DOE/RL-96-68, 2014, *Hanford Analytical Services Quality Assurance Requirements Document* (HASQARD), Rev. 4, *Volume 1, Administrative Requirements*; *Volume 2, Sampling Technical Requirements*; *Volume 3, Field Analytical Technical Requirements*; and *Volume 4, Laboratory Technical Requirements*, U.S. Department of Energy, Richland Operations Office, Richland, Washington. Available at: http://www.hanford.gov/files.cfm/DOE-RL-96-68-VOL1-04.pdf. http://www.hanford.gov/files.cfm/DOE-RL-96-68-VOL2-04.pdf. http://www.hanford.gov/files.cfm/DOE-RL-96-68-VOL3-04.pdf. http://www.hanford.gov/files.cfm/DOE-RL-96-68-VOL4-04.pdf.

DOE/RL-97-02, 1997, *National Register of Historic Places Multiple Property Documentation Form – Historic, Archaeological and Traditional Cultural Properties of the Hanford Site, Washington*, Rev. 0, U.S. Department of Energy, Richland Operations Office, Richland, Washington. Available at: http://pdw.hanford.gov/arpir/index.cfm/viewDoc?accession=0084900.

DOE/RL-99-89, 2001, *Remedial Design Report and Remedial Action Work Plan for the K Basins Interim Remedial Action*, Rev. 1, U.S. Department of Energy, Richland Operations Office, Richland, Washington. Available at: http://pdw.hanford.gov/arpir/index.cfm/viewDoc?accession=D8909028.

DOE/RL-2001-41, 2015, *Sitewide Institutional Controls Plan for Hanford CERCLA Response Actions and RCRA Corrective Actions*, Rev. 8, U.S. Department of Energy, Richland Operations Office, Richland, Washington. Available at: http://pdw.hanford.gov/arpir/index.cfm/viewDoc?accession=0081640H.

DOE/RL-2005-26, 2007, *Removal Action Work Plan for 105-KE/105-KW Reactor Facilities and Ancillary Facilities*, Rev. 1, U.S. Department of Energy, Richland Operations Office, Richland, Washington. Available at: http://pdw.hanford.gov/arpir/index.cfm/viewDoc?accession=DA04508807.

DOE/RL-2006-06, 2007, *Remedial Design Report and Remedial Action Work Plan for the K Basins Interim Remedial Action: Sludge Treatment and Interim Storage*, Rev. 0, U.S. Department of Energy, Richland Operations Office, Richland, Washington.

DOE/RL-2006-06.3, 2006, *Remedial Design Report for the K Basins Interim Remedial Action: Sludge Treatment and Interim Storage: Phase 3: Sludge Assay and Solidification*, Rev. 0 Draft, U.S. Department of Energy, Richland Operations Office, Richland, Washington. Available at: http://pdw.hanford.gov/arpir/index.cfm/viewDoc?accession=DA04044611.

DOE/RL-2006-29, 2010, *Calculating Potential-to-Emit Radiological Releases and Doses*, Rev. 1, U.S. Department of Energy, Richland Operations Office, Richland, Washington. Available at: http://pdw.hanford.gov/arpir/index.cfm/viewDoc?accession=1009270905.

DOE/RL-2008-46-ADD2, 2010, *Integrated 100 Area Remedial Investigation/Feasibility Study Work Plan Addendum 2: 100-KR-1, 100-KR-2, and 100-KR-4 Operable Units*, Rev. 0, U.S. Department of Energy, Richland Operations Office, Richland, Washington. Available at: http://pdw.hanford.gov/arpir/index.cfm/viewDoc?accession=0084719.

DOE/RL-2010-52, 2011, *Remedial Design and Remedial Action Work Plan for the K Basins Interim Remedial Action: 105-K West Basin Deactivation*, Rev. 0, U.S. Department of Energy, Richland Operations Office, Richland, Washington. Available at: http://pdw.hanford.gov/arpir/index.cfm/viewDoc?accession=0093964.

DOE/RL-2010-53, 2011, *Remedial Design/Remedial Action Work Plan for the 100 Area Remaining Sites Interim Remedial Action: 105-K West Basin Demolition and Removal*, Rev. 0, U.S. Department of Energy, Richland Operations Office, Richland, Washington. Available at: http://pdw.hanford.gov/arpir/index.cfm/viewDoc?accession=0087153.

DOE/RL-2010-63, 2011, *Remedial Design/Remedial Action Work Plan for the K Basins Interim Remedial Action: Removal of K Basins Sludge from the River Corridor to the Central Plateau; and Removal of Knock Out Pot Contents from the K Basins*, Rev. 0, U.S. Department of Energy, Richland Operations Office, Richland, Washington. Available at: http://pdw.hanford.gov/arpir/index.cfm/viewDoc?accession=0093962.

DOE/RL-2010-107, 2011, *105-K West Basin Qualified Process and Plan to Satisfy End-Point Criteria (Fuel, Sludge, and Below-Water Debris)*, Rev. 0, U.S. Department of Energy, Richland Operations Office, Richland, Washington. Available at: http://pdw.hanford.gov/arpir/index.cfm/viewDoc?accession=0089307.

DOE/RL-2011-15, 2011, *Remedial Design/Remedial Action Work Plan for the K Basins Interim Remedial Action: Treatment and Packaging of K Basins Sludge*, Rev. 0, U.S. Department of Energy, Richland Operations Office, Richland, Washington. Available at: http://pdw.hanford.gov/arpir/index.cfm/viewDoc?accession=0081240H.

DOE/RL-2015-07, 2015, *Hanford Site Groundwater Monitoring Report for 2014*, Rev. 0, U.S. Department of Energy, Richland Operations Office, Richland, Washington. Available at: http://pdw.hanford.gov/arpir/index.cfm/viewDoc?accession=0080600H.

DOE/WIPP-02-3122, 2013, *Transuranic Waste Acceptance Criteria for the Waste Isolation Pilot Plant*, Rev. 7.4, U.S. Department of Energy, Carlsbad Field Office, Carlsbad, New Mexico. Available at: http://www.wipp.energy.gov/library/wac/wac.pdf.

DOE/WIPP-02-3214, 2009, *Remote-Handled TRU Characterization Program Implementation Plan*, Rev. 1, U.S. Department of Energy, Carlsbad Field Office, Carlsbad, New Mexico. Available at: http://www.wipp.energy.gov/rcradox/DOE-WIPP-02-3214_Rev_1.pdf.

Ecology, EPA, and DOE, 1989a, *Hanford Federal Facility Agreement and Consent Order*, as amended, Washington State Department of Ecology, U.S. Environmental Protection Agency, and U.S. Department of Energy, Olympia, Washington. Available at: http://www.hanford.gov/?page=81.

Ecology, EPA, and DOE, 1989b, *Hanford Federal Facility Agreement and Consent Order Action Plan*, as amended, Washington State Department of Ecology, U.S. Environmental Protection Agency, and U.S. Department of Energy, Olympia, Washington. Available at: http://www.hanford.gov/?page=82.

Endangered Species Act of 1973, Pub. L. 93-205, as amended, 7 USC 136, 16 USC 1531, et seq. Available at: http://www.nmfs.noaa.gov/pr/pdfs/laws/esa.pdf.

EPA/240/B-01/003, 2001, *EPA Requirements for Quality Assurance Project Plans*, EPA QA/R-5, Office of Environmental Information, U.S. Environmental Protection Agency, Washington, D.C. Available at: http://www2.epa.gov/sites/production/files/2015-07/documents/r5-final.pdf.

EPA/600/R-96/055, 1994, *Guidance for the Data Quality Objectives Process*, EPA QA/G-4, Office of Research and Development, U.S. Environmental Protection Agency, Washington, D.C. Available at: https://www3.epa.gov/epawaste/hazard/correctiveaction/resources/guidance/qa/epaqag4.pdf.

EPA, Ecology, and DOE, 2005, *Amendment to the Record of Decision for the U.S. Department of Energy Hanford Site 100 K Area K Basins Interim Remedial Action*, U.S. Environmental Protection Agency, Washington State Department of Ecology, and U.S. Department of Energy, Olympia, Washington. Available at: http://pdw.hanford.gov/arpir/index.cfm/viewDoc?accession=DA450992.

EPA/ROD/R10-99/059, 1999, *Interim Remedial Action Record of Decision for the 100-KR-2 Operable Unit K Basins, Hanford Site, Benton County, Washington*, U.S. Environmental Protection Agency, Region 10, Seattle, Washington. Available at: http://pdw.hanford.gov/arpir/index.cfm/viewDoc?accession=0078952H.

Hazardous Materials Transportation Act of 1975, as amended, Pub. L. 93-933, 49 USC 5101-5127. Available at: http://www.gpo.gov/fdsys/pkg/USCODE-2011-title49/html/USCODE-2011-title49-subtitleIII-chap51.htm.

HNF-4747, 2010, *100K West Basin - Deactivation Health and Safety Plan*, Rev. 9, CH2M HILL Plateau Remediation Company, Richland, Washington.

HNF-20632, 2011, *End Point Criteria for the K Basins Interim Remedial Action*, Rev. 3, CH2M HILL Plateau Remediation Company, Richland, Washington.

HNF-23333, 2009, *Environmental Quality Assurance Plan*, Rev. 3, CH2M HILL Plateau Remediation Company, Richland, Washington.

HNF-36985, 2009, *Data Quality Objectives for Sampling and Analysis of K Basin Sludge*, Rev. 3, CH2M HILL Plateau Remediation Company, Richland, Washington.

HNF-40475, 2014, *Functional Design Criteria Sludge Treatment Project Phase 1 - ECRTS*, Rev. 6, CH2M HILL Plateau Remediation Company, Richland, Washington.

HNF-41051, 2015, *STP Container and Settler Sludge Process System Description and Material Balance*, Rev. 12, CH2M HILL Plateau Remediation Company, Richland, Washington.

HNF-44226, 2014, *Code of Record Sludge Treatment Project Engineered Container Retrieval and Transfer System*, Rev. 4, CH2M HILL Plateau Remediation Company, Richland, Washington.

HNF-SD-SNF-TI-015, 2015, *Spent Nuclear Fuel Project Technical Databook, Volume 2, Sludge*, Rev. 26, CH2M HILL Plateau Remediation Company, Richland, Washington.

KBC-33786, 2009, *Quality Assurance Project Plan/Sampling and Analysis Plan for Sludge in the KW Engineered Containers*, Rev. 2, CH2M HILL Plateau Remediation Company.

KBC-40467, 2009, *Quality Assurance Project Plan/Sampling and Analysis Plan for Containerized KW Settler Sludge*, Rev. 1-A, U.S. Department of Energy, Richland Operations Office, Richland, Washington. Available at: http://pdw.hanford.gov/arpir/index.cfm/viewDoc?accession=1007081389.

National Historic Preservation Act of 1966, Pub. L. 89-665, as amended, 16 USC 470, et seq. Available at: http://www.achp.gov/docs/nhpa%202008-final.pdf.

NAVD88, 1988, *North American Vertical Datum of 1988*, as revised, National Geodetic Survey, Federal Geodetic Control Committee, Silver Spring, Maryland. Available at: http://www.ngs.noaa.gov/.

PRC-STP-00065, 2009, *Decision Plan: Alternatives Analysis and Technology Selection for Treatment and Packaging of K Basin Sludge*, Rev. 0, CH2M HILL Plateau Remediation Company, Richland, Washington. Available at: http://pdw.hanford.gov/arpir/index.cfm/viewDoc?accession=0910130514.

PRC-STP-00113, 2010, *Sludge Treatment Project Engineered Container Retrieval and Transfer System Technology Maturation Plan*, Rev. 0, CH2M HILL Plateau Remediation Company, Richland, Washington.

PRC-STP-00133, 2011, *Sludge Treatment Project Engineered Container Retrieval and Transfer System, Hose-in-Hose Specification*, Rev. 2, CH2M HILL Plateau Remediation Company, Richland, Washington.

PRC-STP-00241, 2015, *Sludge Treatment Project-Engineered Container Retrieval and Transfer System - Thermal and Gas Analyses for Sludge Transport and Storage Container (STSC) Storage at T Plant*, Rev. 3, CH2M HILL Plateau Remediation Company, Richland, Washington.

PRC-STP-00270, 2012, *Data Validation and Assessment by the Sludge Treatment Project for Characterization Data from Engineered Container SCS-CON-220, -240, -250, and -260*, Rev. 0B, CH2M HILL Plateau Remediation Company, Richland, Washington.

PRC-STP-00465, 2011, *K-Basin Sludge Treatment Project – Phase 2 Technology Evaluation and Alternatives Analysis*, Rev. 0, CH2M HILL Plateau Remediation Company, Richland, Washington.

PRC-STP-00523, 2012, *Data Validation and Assessment by the Sludge Treatment Project for Characterization Data from Engineered Container SCS-CON-230*, Rev. 0 and 0A, CH2M HILL Plateau Remediation Company, Richland, Washington.

PRC-STP-00560, 2012, *Data Validation and Assessment by the Sludge Treatment Project for Characterization Data from Engineered Container SCS-CON-210*, Rev. 0, 0A, and 0B, CH2M HILL Plateau Remediation Company, Richland, Washington.

PRC-STP-00615, 2012, *Preliminary Technology Maturation Plan for the K-Basins Sludge Treatment and Packaging Facility*, Rev. 0, CH2M HILL Plateau Remediation Company, Richland, Washington.

PRC-STP-00688, 2014, *Thermal and Gas Analyses for a Sludge Transport and Storage Container (STSC) During Transportation*, Rev. 2, CH2M HILL Plateau Remediation Company, Richland, Washington.

PRC-STP-00704, 2013, *Design Compliance Matrices for the Sludge Treatment Project Engineered Container Retrieval and Transfer System*, Rev. 2, CH2M HILL Plateau Remediation Company, Richland, Washington.

PRC-STP-00718, 2015, *Sludge Treatment Project Engineered Container Retrieval and Transfer System Preliminary Documented Safety Analysis*, Rev. 1, CH2M HILL Plateau Remediation Company, Richland, Washington.

PRC-STP-00731, 2015, *Sludge Treatment Project Engineered Container Retrieval and Transfer System Final Design Control Decision Report*, Rev. 5, CH2M HILL Plateau Remediation Company, Richland, Washington.

PRC-STP-00751, 2013, *Critical Decision-2/3 Report for the Sludge Treatment Project Engineered Container Retrieval and Transfer System*, Rev. 0, CH2M HILL Plateau Remediation Company, Richland, Washington.

PRC-STP-00754, 2015, *Setpoint Determination for the Sludge Treatment Project Engineered Container Retrieval and Transfer System*, Rev. 2, CH2M HILL Plateau Remediation Company, Richland, Washington.

PRC-STP-TR-00412, 2011, *Test Report for Sludge Treatment Project Engineered Container Retrieval and Transfer System Integrated Retrieval and Transfer Dry Test*, Rev. 1, CH2M HILL Plateau Remediation Company, Richland, Washington.

PRC-STP-TR-00514, 2011, *Test Report For Sludge Treatment Project Engineered Container Retrieval and Transfer System TRL-6 Integrated System Demonstration*, Rev. 0, CH2M HILL Plateau Remedation Company, Richland, Washington.

PRC-STP-TR-00903, 2014, *Report for the Integrated Process Optimization Demonstration for the Sludge Treatment Project Engineered Container Retrieval and Transfer System*, Rev. 0, CH2M HILL Plateau Remediation Company, Richland, Washington.

PRC-STP-TR-00911, 2014, *Report for Overfill Recovery Tool Optimization for the Sludge Treatment Project Engineered Container Retrieval and Transfer System*, Rev. 0, CH2M HILL Plateau Remediation Company, Richland, Washington.

RCW 70.94, "Washington Clean Air Act," *Revised Code of Washington*, Olympia, Washington. Available at: http://apps.leg.wa.gov/RCW/default.aspx?cite=70.94.

RCW 70.105, "Hazardous Waste Management," *Revised Code of Washington*, Olympia, Washington. Available at: http://apps.leg.wa.gov/RCW/default.aspx?cite=70.105.

Resource Conservation and Recovery Act of 1976, 42 USC 6901, et seq. Available at: http://www.epa.gov/rcraonline/.

RMA IP-2, 2009, *The 2009 Hose Handbook*, Eighth Edition, Rubber Manufacturers Association, Washington, D.C. Available at: http://www.summersrubber.com/userfiles/file/IP-2-2009%20Hose%20Handbook.pdf.

SNF-9430, 2005, *Waste Management Plan for the K Basins Interim Remedial Action*, Rev. 2, Fluor Hanford, Inc., Richland, Washington. Available at: http://pdw.hanford.gov/arpir/index.cfm/viewDoc?accession=1006100790.

The Hanford Reach Study Act, 1988, Public Law 100-605, 102 Stat. 3043, 100th Congress, U.S. House of Representatives, Washington, D.C. Available at: http://pdw.hanford.gov/arpir/index.cfm/viewDoc?accession=DA06639964.

Toxic Substances Control Act of 1976, Pub. L. 107-377, as amended, 15 USC 2601, et seq. Available at: http://epw.senate.gov/tsca.pdf.

TPA-CN-270, 2009, *Change Notice for Modifying Approved Documents/Workplans In Accordance with the Tri-Party Agreement Action Plan, Section 9.0, Documentation and Records: Remedial Design Report and Remedial Action Work Plan for the K Basins Interim December 2001 Remedial Action, DOE/RL-99-89, Revision 1*, dated March 26, U.S. Department of Energy, Richland Operations Office, and U.S. Environmental Protection Agency, Richland, Washington. Available at: http://pdw.hanford.gov/arpir/index.cfm/viewDoc?accession=0904130551.

TPA-CN-320, 2010, *Change Notice for Modifying Approved Documents/Workplans In Accordance with the Tri-Party Agreement Action Plan, Section 9.0, Documentation and Records: DOE/RL-96-17, Rev. 6, Remedial Design Report/Remedial Action Work Plan/for the 100 Area*, dated January 6, U.S. Department of Energy, Richland Operations Office, and U.S. Environmental Protection Agency, Richland, Washington. Available at: http://pdw.hanford.gov/arpir/index.cfm/viewDoc?accession=1001290783.

WAC 173-303, "Dangerous Waste Regulations," *Washington Administrative Code*, Olympia, Washington. Available at: http://apps.leg.wa.gov/WAC/default.aspx?cite=173-303.

303-016, "Identifying Solid Waste."

303-070, "Designation of Dangerous Waste."

303-140, 'Land Disposal Restrictions."

303-170, "Requirements for Generators of Dangerous Waste."

303-630, "Use and Management of Containers."

303-640, "Tank Systems."

WAC 173-400, "General Regulations for Air Pollution Sources," *Washington Administrative Code*, Olympia, Washington. Available at: http://apps.leg.wa.gov/WAC/default.aspx?cite=173-400.

400-040, "General Standards for Maximum Emissions."

400-113, "Requirements for New Sources in Attainment or Unclassifiable Areas."

WAC 173-460, "Controls for New Sources of Toxic Air Pollutants," *Washington Administrative Code*, Olympia, Washington. Available at: http://apps.leg.wa.gov/WAC/default.aspx?cite=173-460.

460-030, "Applicability."

460-060, "Control Technology Requirements."

460-070, "Ambient Impact Requirement."

460-150, "Table of ASIL, SQER and de Minimis Emission Values."

WAC 173-480, "Ambient Air Quality Standards and Emission Limits for Radionuclides," *Washington Administrative Code*, Olympia, Washington. Available at: http://apps.leg.wa.gov/WAC/default.aspx?cite=173-480.

480-050, "General Standards for Maximum Permissible Emissions."

480-070, "Emission Monitoring and Compliance Procedures."

WAC 246-247, "Radiation Protection—Air Emissions," *Washington Administrative Code*, Olympia, Washington. Available at: http://apps.leg.wa.gov/WAC/default.aspx?cite=246-247.

247-040, "General Standards."

247-075, "Monitoring, Testing and Quality Assurance."

WCH-191, 2015, *Environmental Restoration Disposal Facility Waste Acceptance Criteria*, Rev. 4, Washington Closure Hanford, Richland, Washington. Available at: http://pdw.hanford.gov/arpir/index.cfm/viewDoc?accession=0080195H.

This page intentionally left blank.

Appendix A

K Basins Interim Remedial Action Air Monitoring Plan for Operation of the Engineered Container Retrieval and Transfer System at the 105-K West Basin and 105-K West Basin Annex

This page intentionally left blank.

Contents

A1 Introduction A-1
A2 Radiological Air Emissions A-2
A3 Criteria or Toxic Air Emissions A-2
A4 Radiological Airborne Source Information A-2
A5 Emission Controls A-4
A6 Monitoring A-4
A7 References A-5

Figure

Figure A-1. 105-KW Basin Annex Emission Sources A-1

Tables

Table A-1. Estimated Characteristics of Radiological Emissions Associated with the ECRTS A-3

Terms

105-KW	105-K West
ARAR	applicable or relevant and appropriate requirement
BARCT	best available radionuclide control technology
EC	engineered container
ECRTS	Engineered Container Retrieval and Transfer System
HEPA	high-efficiency particulate air
MEI	maximally exposed individual
PTE	potential-to-emit
STSC	sludge transfer and storage containers
TEDE	total effective dose equivalent

A1 Introduction

This appendix describes the screening of potential radiological and nonradiological emissions generated from the Engineered Container Retrieval and Transfer System (ECRTS) and emitted from the 105-K West (105-KW) Basin building and through the 105-KW Basin Annex stack during sludge removal of the 105-KW Basin. A description of how emissions will be monitored to ensure that they are within limits is included.

The final ECRTS design is described in the main text. Figure A-1 depicts the sources of air emissions within the 105-KW Basin Annex. Transfer of sludge from the six engineered containers (ECs) stored underwater in the KW Basin is the source of air emissions within the KW Basin Building.

Sludge retrieval from ECs in the 105-KW Basin will be performed underwater, and the transfer of that sludge to the 105-KW Basin Annex will utilize a hose-in-hose transfer system.

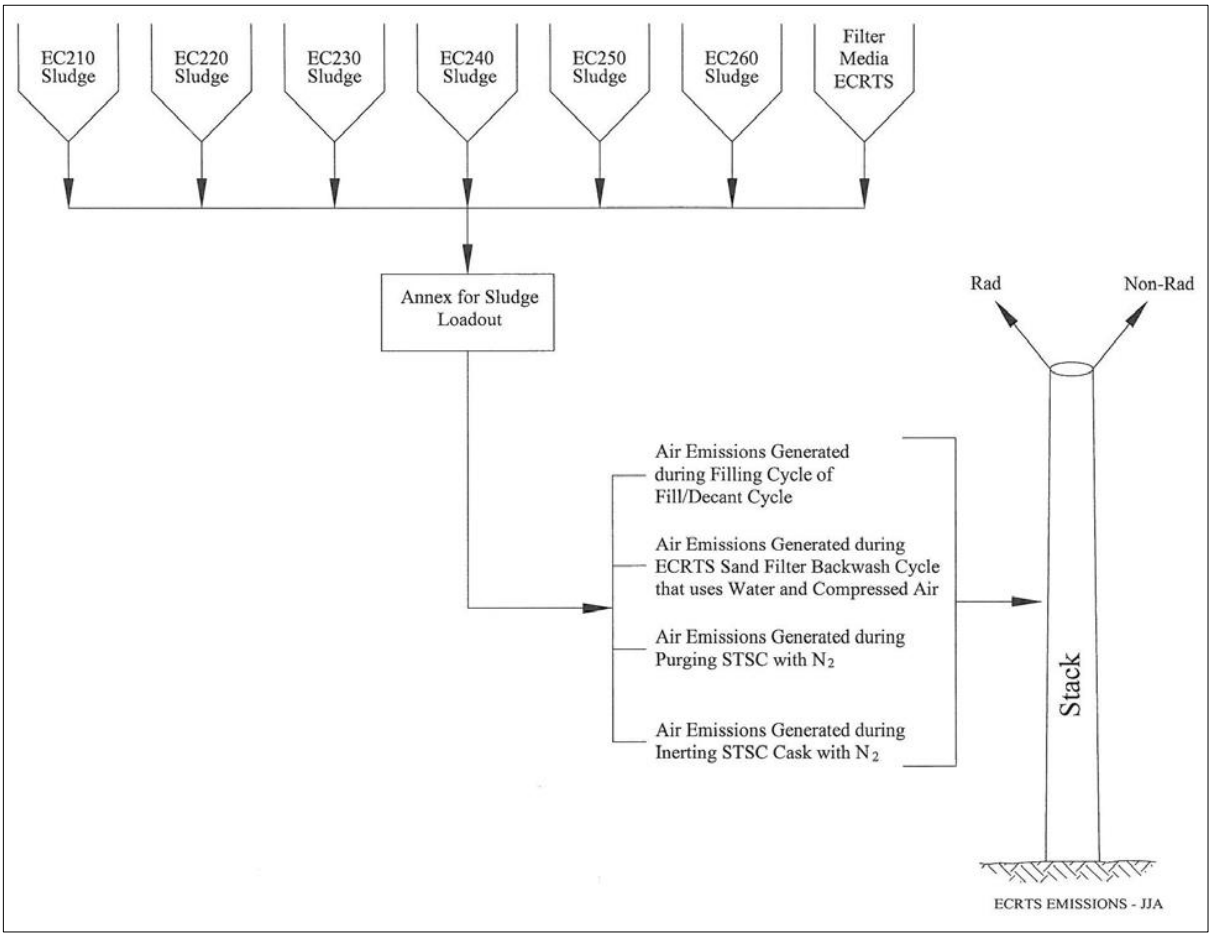

Figure A-1. 105-KW Basin Annex Emission Sources

A2 Radiological Air Emissions

The following applicable or relevant and appropriate requirements (ARARs) are associated with radiological emissions from the ECRTS emitted to the environs through the 105-KW Basin Annex stack and from the six ECs stored underwater in the KW Basin Building:

- 40 CFR 61, "National Emission Standards for Hazardous Air Pollutants," Subpart H, "National Emission Standards for Emissions of Radionuclides Other Than Radon from Department of Energy Facilities"
- WAC 173-480, "Ambient Air Quality Standards and Emission Limits for Radionuclides"
- WAC 246-247, "Radiation Protection—Air Emissions"

The following substantive requirements are derived from these ARARs:

- Radionuclide emissions will be determined, and effective dose equivalent values to members of the public will be calculated using agency approved methods and models.
- Combined radionuclide emissions from the Hanford Site cannot exceed amounts that would cause any member of the public to receive an effective dose equivalent of 10 mrem/year or greater.
- Emissions will be monitored in accordance with approved methods and quality assurance practices.
- Emissions will be controlled in accordance with best available radionuclide control technology (BARCT).

A3 Criteria or Toxic Air Emissions

The following ARARs are associated with nonradiological emissions from the ECRTS emitted to the environment through the 105-KW Basin Annex stack:

- WAC 173-400, "General Regulations for Air Pollution Sources"
- WAC 173-460, "Controls for New Sources of Toxic Air Pollutants"

The substantive requirements derived from these ARARs include standards for toxic emissions, visible emissions, fallout, fugitive emissions, odors, emissions detrimental to persons or property, sulfur dioxide, concealment and masking, and fugitive dust.

The potential emissions of target organic compounds (i.e., semivolatile and volatile toxic air pollutants) associated with the removal of sludge in the six ECs in the 105-KW Basin using the ECRTS and exhausted through the 105-KW Basin Stack were estimated (ECF-100KR2-12-0083, *New Source Review KW Basin ECRTS*). This estimate determined the mass (in pounds per year) of toxic air pollutants potentially discharged to the environment. This estimate concluded that the emissions meet small quantity emission rates for toxic air pollutants listed in WAC 173-460-150, "Table of ASIL, SQER and de Minimis Emission Values." Therefore, use of treatment technologies for controlling emissions of toxic air pollutants is not necessary.

A4 Radiological Airborne Source Information

A graded approach for applying emission monitoring and emission control requirements has been adopted in the regulations listed in Section A2 and is based on the potential-to-emit (PTE) for a facility. In accordance with 40 CFR 61.93.(b)(4)(ii), "Emission Monitoring and Test Procedures," "the estimated

radionuclide release rates shall be based on the discharge of the effluent stream that would result if all pollution control equipment did not exist, but the facilities operations were otherwise normal." The sludge removal project is expected to be completed in 1 year, so PTE associated with ECRTS operation has been conservatively estimated for the removal of sludge in each of six ECs in the 105-KW Basin Pool and then totaled. PTE associated with all six ECs has been conservatively estimated to be 23 curies per year, as shown in Table A-1 (ECF-100KR2-12-0005, *Potential to Emit Calculation for KW Basin Annex Engineered Container Retrieval and Transfer System*).

Table A-1. Estimated Characteristics of Radiological Emissions Associated with the ECRTS

	Case 1 KW Integrated Water Treatment System Settler Tank Sludge EC 230 (Vol. 3.5 m^3)	**Case 2 KE Basin Floor and Pit Sludge ECs 240, 250, and 260 (Vol. 18.4 m^3)**	**Case 3 KW Basin Floor and Pit Sludge EC 210 (Vol. 4.2 m^3)**	**Case 4 KW Basin Floor and Pit Sludge EC 220 (Vol. 1.0 m^3)**	**Total (Sum of Cases 1 to 4) (Vol. 27.1 m^3)**
PTE, curies per year	7.25E-01	2.43E-01	1.08E-01	1.12E-01	1.19E+00
PTE TEDE to MEI, mrem/yr	2.30E-01	6.88E-02	2.20E-02	2.48E-02	3.5E-01
Abated Dose to MEI, mrem/yr	1.16E-04	3.44E-05	1.10E-05	1.24E-05	1.74E-4
Isotopes that Contribute					
>10% PTE TEDE to the MEI	Strontium-90, Plutonium-239, Plutonium-240, Americium-241	Strontium-90, Plutonium-239, Plutonium-240, Americium-241	Cesium-137, Strontium-90, Plutonium-239, Plutonium-240, Americium-241	Strontium-90, Plutonium-239, Plutonium-240, Americium-241	
>0.1 mrem/yr PTE TEDE to the MEI					
>25% of the TEDE to the MEI after controls	Americium-241	Americium-241	Americium-241	Americium-241	

EC = engineered container
MEI = maximally exposed individual
PTE = potential-to-emit
TEDE = total effective dose equivalent

The distance to the maximally exposed individual (MEI) is 8,900 m (29,200 ft) north northwest of the 100-K Area (DOE/RL-2006-29, *Calculating Potential to Emit Radiological Releases and Doses*). This location represents the nearest unrestricted public access and, therefore, the MEI for purposes of assessing potential public exposure due to airborne releases. The total offsite unabated emissions in terms of PTE to the receptor from EC storage and ECRTS operations could result in up to 3.5E-01 mrem/year total effective dose equivalent (TEDE) to the MEI (ECF-100KR2-12-0005). The total abated (high-efficiency particulate air [HEPA] filtered) emissions from the KW Annex Stack to the receptor from ECRTS operations could result in up to 1.74E-4 mrem/year TEDE to the MEI, as shown in

Table A-1 (ECF-100KR2-12-0005). The total abated (basin water) emissions from the KW Basin Building for the ECRTS transfer activities are bounded by the Table A-1 values because the removal efficiency of the basin water was determined to be 99.999 percent (WHC-SD-NR-ES-016, *Transport Mechanism of Radionuclides in 105-KE Fuel Storage Basin to Airborne Effluent Release*). Table A-1 values are based on a 99.95 percent removal efficiency for a HEPA filtered abatement system.

A5 Emission Controls

The estimated TEDE received by the MEI because of unabated emissions from operations of the ECRTS is greater than 0.1 mrem/yr. Therefore, BARCT standards listed under WAC 246-247-110(18), Appendix A, "Application Information Requirements" are incorporated as applicable into the design of the 105-KW Basin Annex exhaust ventilation system. The exhaust system will use a demister for separation of any moisture in the offgas from the process vents and two stages of HEPA filters, in series, for filtering the exhaust before being discharged to the environment.

HEPA filters used to filter the exhaust will be in place leak tested in the field prior to startup of the ECRTS and annually thereafter in accordance with the HEPA filter bank in-place leak test procedural guidelines from ASME AG-1-2015, *Code on Nuclear Air and Gas Treatment*.

The HEPA filter housings will also be equipped with differential pressure gauges across each stage of HEPA filters. The housings will be periodically monitored for changes in differential pressures, and annually calibrated thereafter, as needed.

The basin water quality control has been accepted as BARCT for the KW Basin Building (DOE/RL-99-98). The integrated water treatment system air sparging system is no longer required to maintain basin water quality; therefore, HEPA filtration associated with the system is no longer required and is not considered an emission control for the KW Basin Building. The basin water quality will be maintained below a 30 µCi/L threshold for cesium-137, with a 15 µCi/L action level for cesium-137, where additional water treatment equipment will be placed into operation.

A6 Monitoring

The estimated TEDE potentially received by the MEI due to unabated emissions from the ECRTS is greater than 0.1 mrem/yr. Therefore, samples of the 105-KW Basin Annex stack emissions will be collected and measured based on the applicable principles of measurement described in 40 CFR 61, Appendix B, "Test Methods," Method 114. As a minimum, emissions of those radionuclides identified in Table A-1 (cesium-137, strontium-90, plutonium-239, plutonium-240, and americium-241) will be sampled monthly and characterized quarterly for estimating emissions and determining conformance to the BARCT standard for emissions, and to the 10 mrem/year standard for the Hanford Site. Monthly samples will be analyzed for total alpha radioactive content and gross beta/gamma radioactive content, providing monthly results. The monthly sampling frequency may be extended if the ECRTS is in the midst of loading a sludge transport and storage container. In that case, emissions will be sampled at the next available window of opportunity (i.e., before loading the next container).

Emission rates will be kept relatively constant at 113.3 m^3/min (4,000 ft^3/min) using variable frequency drive motors with the exhaust fans programmed to maintain a constant rate of exhaust flow out the stack. Therefore, because stack flows will be relatively constant, flow rates will checked periodically by measuring velocity and computing the volumetric flow rate before startup of the ECRTS, and annually thereafter, as needed.

There is no HEPA filtration on the vents of the KW Basin Building. This situation, coupled with the type of building construction, creates a diffuse and fugitive emission source instead of a point source. The use of basin water in place of HEPA filtration constitutes BARCT for the KW Basin Building emissions. A graded approach will be used for sampling of the basin water as the method of determining the effectiveness of the basin water as BARCT. A monthly water sample will be collected and analyzed for tritium, cesium-137, plutonium-239/240, strontium-90, and uranium. During periods when underwater activities are performed, a once a week sample will be collected and analyzed if the basin water quality is ≤10 µCi/L for cesium-137. If the water quality is >10 µCi/L for cesium-137, basin water sampling and analysis will be done once per shift. To ensure worker protection, workplace monitoring within the KW Basin Building will be performed when workers are present.

The diffuse and fugitive emissions from both the KW Basin Building and KW Annex will be monitored for using the existing Near Facility Monitoring Network described in DOE/RL-91-50, *Hanford Site Environmental Monitoring Plan*. These air monitors will follow the protocol established for the Near Facility Monitoring Program on the Hanford Site, which includes the substantive requirements of 40 CFR 61, Appendix B (Method 114). Air samples are collected every 2 weeks and analyzed for total alpha and total beta. These samples are also composited semiannually and analyzed for gamma energy emitting radionuclides, strontium-90, isotopic uranium, and isotopic plutonium. The data results are then entered into the Hanford Site Environmental Information System or the Automated Bar Coding of Air Samples at Hanford database for recordkeeping and reporting. Data from these specific monitors will be summarized in the annual report (DOE/RL-2015-12) that is prepared for the Hanford Site.

A7 References

40 CFR 61, "National Emission Standards for Hazardous Air Pollutants," *Code of Federal Regulations*. Available at: http://www.gpo.gov/fdsys/pkg/CFR-2010-title40-vol8/xml/CFR-2010-title40- vol8-part61.xml.

61.93, "Emission Monitoring and Test Procedures."

Appendix B, "Test Methods."

Subpart H, "National Emission Standards for Emissions of Radionuclides Other Than Radon from Department of Energy Facilities."

ASME AG-1-2015, 2015, *Code on Nuclear Air and Gas Treatment*, American Society of Mechanical Engineers, New York, New York. Available at: http://www.techstreet.com/products/1909222.

DOE/RL-91-50, 2013, *Hanford Site Environmental Monitoring Plan*, Rev. 6A, U.S. Department of Energy, Richland Operations Office, Richland, Washington. Available at: http://pdw.hanford.gov/arpir/index.cfm/viewDoc?accession=1503160460.

DOE/RL-97-28, 2001, *Radioactive Air Emissions Notice of Construction Fuel Removal for 105-KW Basin*, Rev. 2. Available at: http://pdw.hanford.gov/arpir/index.cfm/viewDoc?accession=D8835639

DOE/RL-2006-29, 2006, *Calculating Potential to Emit Radiological Releases and Doses*, Rev. 1, U.S. Department of Energy, Richland Operations Office, Richland, Washington. Available at: http://pdw.hanford.gov/arpir/index.cfm/viewDoc?accession=0904290337.

DOE/RL-2015-12, 2015, *Radionuclide Air Emissions Report for the Hanford Site, Calendar Year 2014*, Rev. 0, U.S. Department of Energy, Richland Operations Office, Richland, Washington. Available at: http://msc.ms.rl.gov/rapidweb/ENVPRO-AIR/index2.cfm?FileName=/docs/37/docs/RAER-DOE-RL-2015-12.pdf

ECF-100KR2-12-0005, 2016, *Potential to Emit Calculation for KW Basin Annex Engineered Container Retrieval and Transfer System*, Rev. 1, CH2M HILL Plateau Remediation Company, Richland, Washington.

ECF-100KR2-12-0083, 2013, *New Source Review KW Basin ECRTS*, Rev. 0, CH2M HILL Plateau Remediation Company, Richland, Washington.

WAC 173-400, "General Regulations for Air Pollution Sources," *Washington Administrative Code*, Olympia, Washington. Available at: http://apps.leg.wa.gov/WAC/default.aspx?cite=173-400.

WAC 173-460, "Controls for New Sources of Toxic Air Pollutants," *Washington Administrative Code*, Olympia, Washington. Available at: http://apps.leg.wa.gov/WAC/default.aspx?cite=173-460.

460-150, "Table of ASIL, SQER and de Minimis Emission Values."

WAC 173-480, "Ambient Air Quality Standards and Emission Limits for Radionuclides," *Washington Administrative Code*, Olympia, Washington. Available at: http://apps.leg.wa.gov/WAC/default.aspx?cite=173-480.

WAC 246-247, "Radiation Protection – Air Emissions," *Washington Administrative Code*, Olympia, Washington. Available at: http://apps.leg.wa.gov/WAC/default.aspx?cite=246-247.

247-110, "Appendix A — Application Information Requirements."

WHC-SD-NR-ES-016, 1993, *Transport Mechanism of Radionuclides in 105-KE Fuel Storage Basin to Airborne Effluent Release*, Topical Report, Rev. 0, Westinghouse Hanford Company, Richland, Washington. Available at: http://pdw.hanford.gov/arpir/index.cfm/viewDoc?accession=E0031708.