START

0032040

ENGINEERING CHANGE NOTICE

Page 1 of 3

1. ECN 197995

Proj. ECN

2. ECN Category (mark one)	3. Originator's Name, Organization, MSIN, and Telephone No.		4. Date
Supplemental [ ] Direct Revision [X] Change ECN [ ] Temporary [ ] Standby [ ] Supersedure [ ] Cancel/Void [ ]	LM Bergmann, ERE 81340, H6-05, 376-4869		October 11, 1993
	5. Project Title/No./Work Order No. 100 Area Excavation Treatability Test	6. Bldg./Sys./Fac. No. 100-F	7. Impact Level 30
	8. Document Numbers Changed by this ECN (includes sheet no. and rev.) WHC-SD-EN-TC-004	9. Related ECN No(s). 113778	10. Related PO No. NA

11a. Modification Work	11b. Work Package No.	11c. Modification Work Complete	11d. Restored to Original Condition (Temp. or Standby ECN only)
[ ] Yes (fill out Blk. 11b) [X] No (NA Blks. 11b, 11c, 11d)	NA	NA Cog. Engineer Signature & Date	NA Cog. Engineer Signature & Date

12. Description of Change

Replace the attached Rev. 0-A pages into WHC-SD-EN-TC-004. The following revisions were made:

Page 7: Deleted reference to one lift per day in section 2.3.3.
Page 9: Revised table 3 and added footnote stating that the schedule is approximate and is subject to change based on field conditions. Revised steps 6 and 8 to reflect field conditions.
Page 10: Modified Figure 4 to increase the monitoring at the fringe area.
Page 11-12: Incorporated ECN 113778 into Section 2.3.4 and Table 4.
Page 16: Modified data sheet to improve reporting of real time air sampling data.
Page A-4: Stated that the 3x3-in. NaI(Tl) detector will be used as a backup.
Page B-3: Revised table BT-1 and added footnote stating that the schedule is approximate and is subject to change based on field conditions.
Pages B-4/5 Modified Section 2.3.1 and Figure BF-1 based on field experience. Deleted collection of soil moisture content samples from this section.
Page B-6: Modified Section 2.3.2 for clarity.
Page B-7: Modified Section 2.4 based on field experience and deleted the soil moisture content samples from this section.
Page B-8 thru B-11 Modified Section 2.5, Table BT-3, Figures Bf-2 and BF-3 to reflect how the crusting agents are being tested in the field and record the data accordingly.
Page C-9: Stated that the 3x3-in. NaI(Tl) detector will be used as a backup.
Page C-14: Modified Section 3.4.2 to incorporate ECN 113778.
Page C-15: Modified Section 3.4.5 to describe the data collection of the meteorological station used in the field.
Page C-18: Modified Table CT-5 per ECN 113778.
Page C-5: Added statement in section 3.2 to allow field changes of the sample and survey locations. A minimum of 16 samples will be taken.

NOV 1993
RECEIVED
EPIC

OFFICIAL RELEASE BY WHC
DATE OCT 18 1993
Station # 12

9313090.1741

THIS PAGE INTENTIONALLY
LEFT BLANK

ENGINEERING CHANGE NOTICE	Page 2 of 3	1. ECN (use no. from pg. 1) 197995

13a. Justification (mark one)							
	Criteria Change	[X]	Design Improvement	[]	Environmental	[]	
As-Found	[]	Facilitate Const.	[]	Const. Error/Omission	[]	Design Error/Omission	[]

13b. Justification Details

- Deleted references to #days versus lift. The procedures were written with the assumption that the dig would progress at one lift per day which isn't the case. Tables in the procedure that stated what would be tested on a certain lift or day have been deleted to allow more flexibility. Testing the water with additives will occur sooner than in the original plan to ensure the additives are tested if the contaminated storage capacity is exceeded before 25'.

- The crusting agent section was modified. The crusting agents are being tested in parallel at different areas throughout the test site and than evaluated daily as to there performance. The original procedure had different crusting agents being tested in series on different days of the test. In addition the use of XDCA was added.

- Modified the data sheets from practical field experience.

- Deleted soil moisture content samples for dust control purposes. These samples will not be useful information to evaluate the products.

- The 3x3 NaI detector was removed from service and will be used as a backup. The 16x16x4-in. NaI detector is adequate to meet the test objectives.

- Will allow deviation to the sampling grid, at the direction of the Field Team Leader to best delineate the area of contamination. The following conditions apply: 16 points must be sampled each lift, and the points must be mapped in the field logbook.

- Incorporated ECN 113778

14. Distribution (include name, MSIN, and no. of copies)		RELEASE STAMP
J. M. Frain (1)	H6-04	See page 1
G. S. Corrigan (1)	H4-16	
J. M. Ayres (1)	H6-02	J.E. 10-18-93
D. B. Blumenkranz (1)	H6-04	Station # 12
L. M. Bergmann (1)	H6-05	
EPIC (2)	H6-08	
Central Files (2)	L8-04	

9313090.1742

THIS PAGE INTENTIONALLY
LEFT BLANK

ENGINEERING CHANGE NOTICE

1. ECN (use no. from pg. 1): 197995

15. Design Verification Required	16. Cost Impact				17. Schedule Impact (days)	
	ENGINEERING		CONSTRUCTION			
[] Yes	Additional	[] $	Additional	[] $	Improvement	[]
[X] No	Savings	[] $	Savings	[] $	Delay	[]

18. Change Impact Review: Indicate the related documents (other than the engineering documents identified on Side 1) that will be affected by the change described in Block 12. Enter the affected document number in Block 19.

SDD/DD	[]	Seismic/Stress Analysis	[]	Tank Calibration Manual	[]
Functional Design Criteria	[]	Stress/Design Report	[]	Health Physics Procedure	[]
Operating Specification	[]	Interface Control Drawing	[]	Spares Multiple Unit Listing	[]
Criticality Specification	[]	Calibration Procedure	[]	Test Procedures/Specification	[]
Conceptual Design Report	[]	Installation Procedure	[]	Component Index	[]
Equipment Spec.	[]	Maintenance Procedure	[]	ASME Coded Item	[]
Const. Spec.	[]	Engineering Procedure	[]	Human Factor Consideration	[]
Procurement Spec.	[]	Operating Instruction	[]	Computer Software	[]
Vendor Information	[]	Operating Procedure	[]	Electric Circuit Schedule	[]
OM Manual	[]	Operational Safety Requirement	[]	ICRS Procedure	[]
FSAR/SAR	[]	IEFD Drawing	[]	Process Control Manual/Plan	[]
Safety Equipment List	[]	Call Arrangement Drawing	[]	Process Flow Chart	[]
Radiation Work Permit	[]	Essential Material Specification	[]	Purchase Requisition	[]
Environmental Impact Statement	[]	Fac. Proc. Samp. Schedule	[]		[]
Environmental Report	[]	Inspection Plan	[]		[]
Environmental Permit	[]	Inventory Adjustment Request	[]		[]

19. Other Affected Documents: (NOTE: Documents listed below will not be revised by this ECN.) Signatures below indicate that the signing organization has been notified of other affected documents listed below.

Document Number/Revision	Document Number/Revision	Document Number Revision
NONE		

20. Approvals

	Signature	Date		Signature	Date
OPERATIONS AND ENGINEERING			ARCHITECT-ENGINEER	NA	
Cog Engineer J. M. Erain		10/14/93	PE		
Cog. Mgr. JG Woolard		10/14/93	QA		
QA G. S. Corrigan		10-14-93	Safety		
Safety		NA	Design		
Security			Environ.		
Environ.			Other		
Projects/Programs					
Tank Waste Remediation System					
Facilities Operations			DEPARTMENT OF ENERGY		
Restoration & Remediation			Signature or Letter No.		
Operations & Support Services					
IRM			ADDITIONAL		
Other					

9313090.1743

THIS PAGE INTENTIONALLY
LEFT BLANK

Date Received: 10/18/93	INFORMATION RELEASE REQUEST	Reference: WHC-CM-3-4

Complete for all Types of Release

Purpose

- [] Speech or Presentation
  - [] Full Paper
  - [] Summary
  - [] Abstract
  - [] Visual Aid
- [] Speakers Bureau
- [] Poster Session
- [] Videotape

(Check only one suffix)

- [] Reference
- [] Technical Report
- [] Thesis or Dissertation
- [] Manual
- [] Brochure/Flier
- [] Software/Database
- [] Controlled Document
- [] Other

ID Number (include revision, volume, etc.)
~~ECN 113778~~/WHC-SD-EN-TC-004, Rev. 0-A

List attachments.
NONE

Date Release Required
10/15/93

Title ECN 197995 to the 100 Area Excavation Treatability Test Procedures

Unclassified Category UC- N/A

Impact Level 3Q

New or novel (patentable) subject matter? [X] No [] Yes
If "Yes", has disclosure been submitted by WHC or other company?
[] No [] Yes Disclosure No(s). N/A

Information received from others in confidence, such as proprietary data, trade secrets, and/or inventions?
[X] No [] Yes (Identify) N/A

Copyrights? [X] No [] Yes
If "Yes", has written permission been granted?
[] No [] Yes (Attach Permission)

Trademarks?
[X] No [] Yes (Identify)

Complete for Speech or Presentation

Title of Conference or Meeting
N/A

Group or Society Sponsoring
N/A

Date(s) of Conference or Meeting
N/A

City/State

Will proceedings be published? [] Yes [] No
Will material be handed out? [] Yes [] No

Title of Journal
N/A

CHECKLIST FOR SIGNATORIES

Review Required per WHC-CM-3-4	Yes	No	Reviewer - Signature Indicates Approval: Name (printed) / Signature / Date
Classification/Unclassified Controlled Nuclear Information	[]	[X]	
Patent - General Counsel	[]	[X]	per OGC memo 2-4-53 M Dolis 10-18-93
Legal - General Counsel	[]	[X]	
Applied Technology/Export Controlled Information or International Program	[]	[X]	
WHC Program/Project	[]	[X]	
Communications	[]	[X]	
RL Program/Project	[]	[X]	
Publication Services	[]	[X]	
Other Program/Project	[]	[X]	

Information conforms to all applicable requirements. The above information is certified to be correct.

	Yes	No
References Available to Intended Audience	[X]	[]
Transmit to DOE-HQ/Office of Scientific and Technical Information	[]	[X]

Author/Requestor (Printed/Signature) Date
LM Bergmann 10/14/93

Intended Audience
[] Internal [] Sponsor [X] External

Responsible Manager (Printed/Signature) Date
JG Woolard 10/14/93

INFORMATION RELEASE ADMINISTRATION APPROVAL STAMP

Stamp is required before release. Release is contingent upon resolution of mandatory comments.

APPROVED FOR RELEASE
OFFICIAL DOCUMENT
NS
Date 10/18/93

Date Cancelled

Date Disapproved

9313090.0744

THIS PAGE INTENTIONALLY
LEFT BLANK

SUPPORTING DOCUMENT

1. Total Pages 81

2. Title	3. Number	4. Rev No.
100 Area Excavation Treatability Test Procedures	WHC-SD-EN-TC-004	0-A

5. Key Words

100-FR-1 Operable Unit, 100-DR-1 Operable Unit, Radiological characterization, Dust control

6. Author

Name: L. M. Bergmann

Signature: for L.M. Bergmann 10/18/93

Organization/Charge Code 81340/PE75C

APPROVED FOR PUBLIC RELEASE 10/18/93 N. Solis

7. Abstract

WHC, *100 Area Excavation Treatability Test Procedures*, WHC-SD-EN-TC-004, Rev. 0-A, Westinghouse Hanford Company, Richland, Washington.

8. PURPOSE AND USE OF DOCUMENT - This document was prepared for use within the U.S. Department of Energy and its contractors. It is to be used only to perform, direct, or integrate work under U.S. Department of Energy contracts. This document is not approved for public release until reviewed.

PATENT STATUS - This document copy, since it is transmitted in advance of patent clearance, is made available in confidence solely for use in performance of work under contracts with the U.S. Department of Energy. This document is not to be published nor its contents otherwise disseminated or used for purposes other than specified above before patent approval for such release or use has been secured, upon request, from the Patent Counsel, U.S. Department of Energy Field Office, Richland, WA.

DISCLAIMER - This report was prepared as an account of work sponsored by an agency of the United States Government. Neither the United States Government nor any agency thereof, nor any of their employees, nor any of their contractors, subcontractors or their employees, makes any warranty, expressed or implied, or assumes any legal liability or responsibility for the accuracy, completeness, or any third party's use or the results of such use of any information, apparatus, product, or process disclosed, or represents that its use would not infringe privately owned rights. Reference herein to any specific commercial product, process, or service by trade name, trademark, manufacturer, or otherwise, does not necessarily constitute or imply its endorsement, recommendation, or favoring by the United States Government or any agency thereof or its contractors or subcontractors. The views and opinions of authors expressed herein do not necessarily state or reflect those of the United States Government or any agency thereof.

9. Impact Level 3Q

10. RELEASE STAMP

OFFICIAL RELEASE BY WHC (11)
DATE OCT 18 1993
Station # 12

9313090.1745

A-6400-073 (11/91) (EF) WEF124

THIS PAGE INTENTIONALLY
LEFT BLANK

RECORD OF REVISION	(1) Document Number WHC-SD-EN-TC-004	Page 1

(2) Title
100 Area Excavation Treatability Test Procedures

CHANGE CONTROL RECORD

(3) Revision	(4) Description of Change - Replace, Add, and Delete Pages	Authorized for Release (5) Cog. Engr.	(6) Cog. Mgr. Date
0	(7) Document issued on EDT 600824	JM Frain	JG Woolard
0	Supplemental ECN 113778	LM Bergmann	JG Woolard
0A RS	~~Supplemental~~ Per ECN ~~190365~~ 197995 issued with page changes. Replace pages 7, 9, 10, 11, 12, 16, A-4, B-3, B-4, B-5, B-6, B-7, B-8, B-11, C-5, C-7, C-9, C-14, C-15, C-18	LM Bergmann	JG Woolard 10/14/93

9313090.1746

THIS PAGE INTENTIONALLY
LEFT BLANK

2.3.2.2 Contamination Reduction Zone. The contamination reduction zone shall contain all provisions necessary to facilitate decontamination. For radiological control purposes, this area will also be posted as a radiologically controlled area and will include the clean spoil piles. Only essential personnel shall be permitted within the contamination reduction zone.

2.3.2.3 Support Zone. The support zone shall contain all other supplies, equipment, and nonessential personnel.

2.3.3 Excavation

The excavation is being conducted to facilitate dust control testing (Appendix B) and field screening for radionuclides (Appendix C). This section is written to detail the actual excavation. The appendixes must be referred to for details on the testing procedures.

The excavation will be completed in a series of 2-ft-deep lifts as shown in Figure 3. The following list outlines the steps necessary for site excavation and field screening.

1. Excavate a 2-ft lift, slope excavation, and segregate soil, conducting radiological surveillance (with hand-held instruments) as directed by the Health Physics Technician (HPT) or field team leader. If large pieces of timer are uncovered, segregate from the soil, if possible, package, and place in waste storage area.

2. Throughout the test, conduct dust-suppression activities on the spoils and in the excavation as directed by the dust control procedures provided in Appendix B.

   The field team leader may authorize additional dust suppression as required by site conditions. Dust control while moving the soil to the contaminated soil storage area is very important. Unloading the truck also requires special considerations: place the misting nozzles on the truck or spray the truck during unloading if required.

   Table 3 briefly details dust suppression techniques to be tested during the excavation.

3. Shut down excavation. Stabilize the excavation with a surfactant or crusting agent, as directed by the field team leader. If Step 4 is to be completed before the end of the shift, do not add the crusting agents/surfactants until screening is complete.

9313090.1747

Lift	Width (ft) at Top of Lift	Contaminated Soil (yd^3)	Total Contam. Soil Volume After Lift is Excavated	Uncontaminated Soil (yd^3)	Total Uncontam. Soil Volume After Lift is Excavated
1	95	0	0	668	668
2	89	30	30	587	1255
3	83	30	60	510	1765
4	77	30	90	439	2204
5	71	30	120	373	2577
6	65	30	150	313	2890
7	59	30	180	258	3148
8	53	30	210	208	3356
9	47	30	240	164	3520
10	41	30	270	125	3645
11	35	0	270	91	3736
12	26	0	270	50	3786
Bottom	20	0	270	0	3786

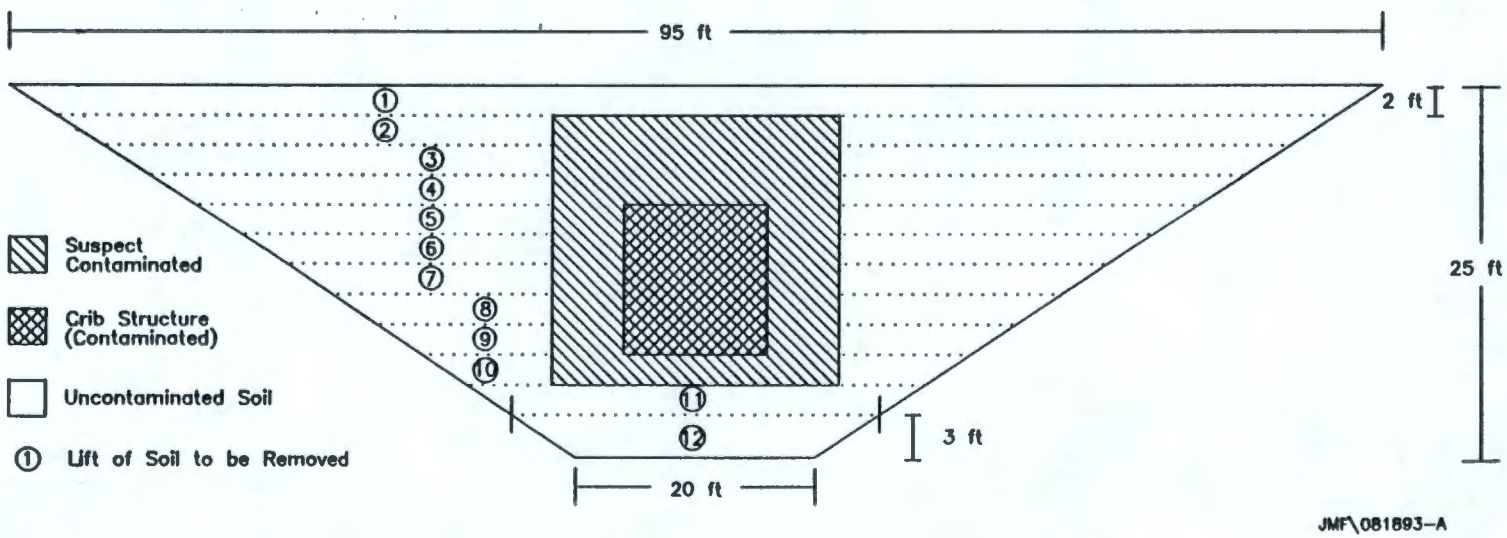

Figure 3. Section Through Excavation.

Table 3. Dust Control Test Phases.

Phase	Depth (ft)[a]	Lift#[a]
Phase 1: No Water Addition[b]	1-2	1
Phase 2: Water Spray	2-6	1-3
Phase 3: Water with Additives	6-25	4-12
Phase 4: Crusting Agents	1-25	All

[a]The depth and lift numbers are approximate. Actual field conditions will dictate the schedule for each phase of testing.

[b]The surface soils will be surveyed for radiological contamination prior to and during excavation activities. If levels indicate contamination greater than background, or if indicated by the Health Physics Technician, Phase 1 will be discontinued and water sprays will be used to prevent the spread of contamination. The tests of "no water addition" will be conducted after the completion of excavation in the clean spoil piles.

9313090.1749

4. After an HPT surveys each sampling point with an Eberline R03B Ion Chamber and a portable alpha meter (see Figure 4 for sampling points), lower sampling and screening equipment (if needed, break through the crusting agent to reveal soil surface). Sample and survey lift (as described in Appendix C). Determine extent of contamination.

5. Remove sampling and radiological screening equipment and conduct radiological surveillance as required to release equipment.

6A. If soil is determined to be contaminated either dump material from the dump truck into the TerraStor or place soil into the unit with a backhoe. In any instance, do not drive over the liner without a minimum of 1 ft cover of soil. The soil shall be higher in the center than on the sides to allow precipitation runoff.

6B. If soil is determined to be clean, place the clean soil in the exclusion zone, south of the excavation (location of the clean spoil piles may be modified depending on site conditions).

7. Prepare for excavation of next lift.

8. Repeat steps 1 through 7 until excavation reaches a depth of 25 ft or the contaminated storage volume has been spent.

9. At the completion of the excavation, take verification samples from bottom and sides of excavation per the guidance of Appendix C. Place a minimum of 2 ft of soil cover (from the clean spoil piles) in the bottom of the excavation as a cover.

   If the bottom of the excavation is still contaminated, reassess the situation with DOE and regulators.

Figure 4. Location of Soil Sampling Points.

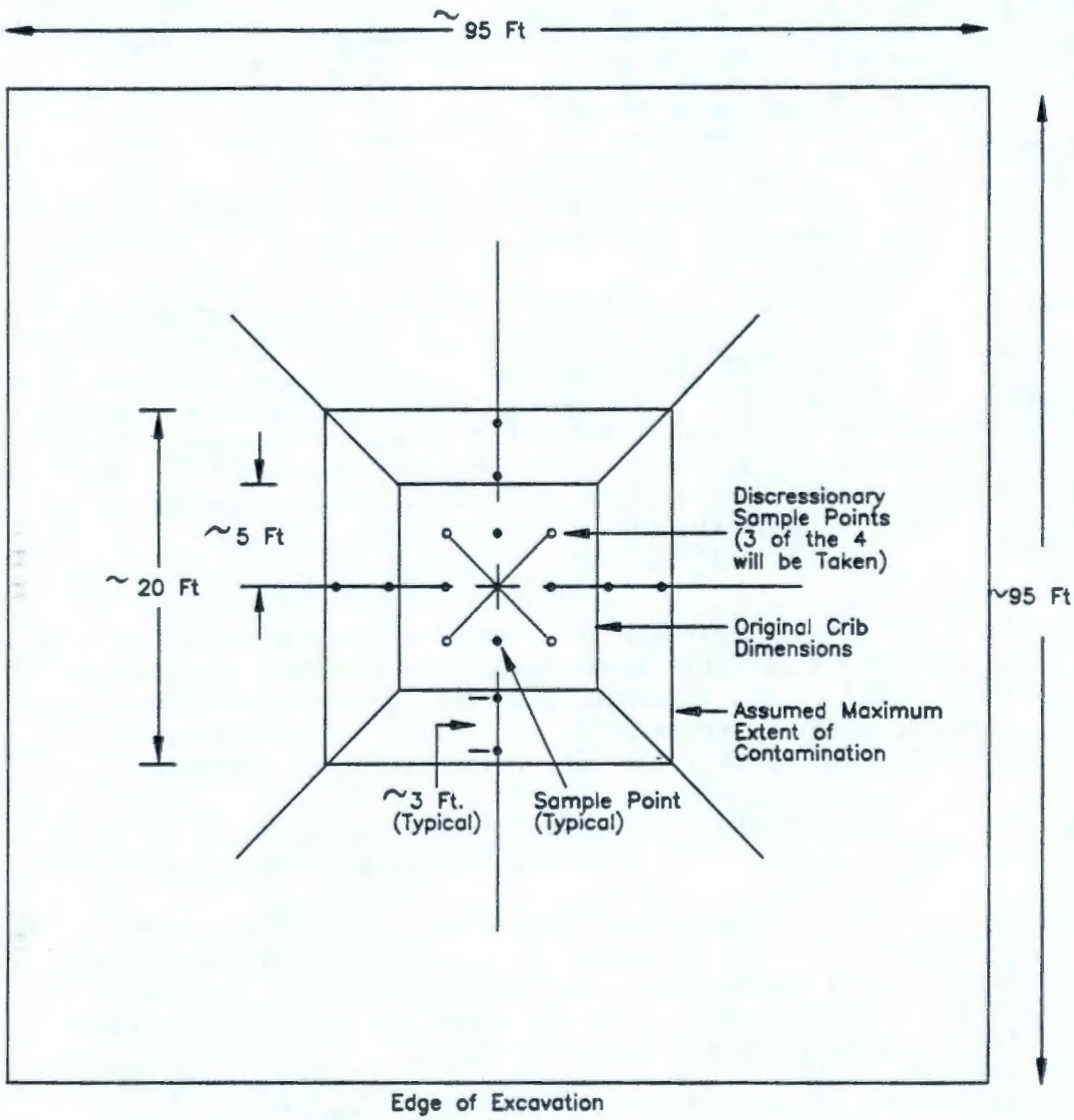

Not to Scale

JMF\071393D1

9313090.1750

10. Survey the four corners of the excavation. Verify slopes.

11. When the verification sample results are returned from the laboratory, backfill the excavation pending discussions with DOE and the regulators. Backfill the excavation by replacing the soil into the excavation in lifts and compacting in 18-in. lifts with the backhoe bucket. Obtain fill to compensate for the contaminated soil volume from Pit 18, which is just south of F Area.

2.3.4 Particulate Monitoring

Three types of particulate monitoring are scheduled to be collected to help assess the effectiveness of the dust suppression techniques tested. The systems to be used are low-volume air samplers to measure total dust concentration, a real-time sampler to conduct total dust measurements on a more frequent basis, and personal air samplers to measure respirable dust emanating from the excavation.

A total of seven low-volume air samplers will be used during this test to monitor particulate concentrations. The location of the air samplers will be adjusted in the field based on the wind direction data collected from the onsite meteorological station. A site map will be completed at the beginning of the test and each time the samplers are adjusted to record the sampler positions.

In addition, real-time total dust air monitoring will be conducted. Readings will be taken at 20 locations at the beginning and end of each shift to obtain a baseline. Measurements will also be taken during the excavation activities as a real-time observation of the dust control effectiveness. Additional measurements will be taken at the direction of the cognizant engineer or delegate (e.g., during times of high winds or when visible dust is present). All measurements will be recorded per Section 4.1.2.

Personal air samplers for total dust monitoring will be worn by the backhoe operators and the sample technicians working in the exclusion zone. New filters will be installed at the start of each work day and collected at the end of the work day as directed by Hanford Environmental Health Foundation approved procedures.

Table 4 indicates the air monitoring schedule. Figure 2 illustrates the tentatively chosen air sample locations.

2.4 CONTAMINATION PREVENTION AND DECONTAMINATION

The primary contaminants of concern are radionuclides. Specific decontamination guidance and special instructions are listed in the RWP. WHC-CM-1-6 (WHC 1993) and the *Occupational Safety and Health Guidance Manual for Hazardous Waste Site Activities* (NIOSH 1985) also provide guidance on decontamination practices. The following is meant to provide an overview of field decontamination procedures and contamination prevention measures.

9313090.1751

Table 4. Air Monitoring Schedule.

Activity	Working hours (7:30-4:00)	Down time (evenings, weekends)
Collect/replace low-volume sampler filters	Start of shift End of shift	Once on weekends
Real-time monitoring (20 locations)	Beginning and end of shift and during excavation activities or other dust-generating periods	None
Install/remove personal air samplers	Install at start of shift Remove at end of shift	None

9313090.1752

2.4.1 Equipment

Successful contamination prevention measures will reduce the likelihood of contamination leaving the exclusion zone and/or the likelihood of creating regulated equipment. The following suggests the minimum contamination prevention measures that should be taken to ensure equipment remains deregulated. The list below does not preclude the HPT from the responsibility of informing onsite personnel of the risk involved with taking equipment into the exclusion zone. The HPT should advise onsite personnel of the proper measures to minimize equipment contamination potential. Dust control equipment (water sprays and surfactants) will be available at all times to mitigate spread of contaminated soil.

- Wrap instruments in tape/plastic when possible
- Take only what is needed
- Avoid contact with contaminated or suspect media
- Avoid the use of equipment with lots of "nooks and crannies"
- HPT will monitor decontamination activities.

Field decontamination of heavy equipment will be accomplished by the application of high-pressure water and/or steam. Decontamination of the backhoe bucket will take place over the soil waste storage unit or the contaminated area of the excavation. Other field decontamination shall be conducted as required by EII 5.4 and WHC-CM-1-6 (WHC 1993).

2.4.2 Personnel Decontamination

Decontamination is the process of removing or neutralizing contaminants that have accumulated on personnel and equipment. To facilitate decontamination, a contamination reduction zone will be maintained at the site. Health Physics personnel have the primary responsibility for conducting operations in the contamination reduction zone. Specific procedures for establishing and maintaining a contamination reduction zone are provided in WHC-CM-1-6. Further guidance is available in the RWP. The following procedure is meant to provide field personnel with direction with regards to exiting the exclusion zone. The list below does not preclude the HPT from the responsibility of informing onsite personnel of the proper clothing removal procedures on an

Table 5. Sample Information and Radionuclide Concentrations.

HEIS #	Location	Time	^{241}Am	^{152}Eu	^{154}Eu	^{155}Eu	^{60}Co	^{137}Cs	$^{239/240}Pu$	^{90}Sr	^{99}Tc	^{235}U	^{238}U
Performance (Detection) Limits (pCi/g)			20	3	3	100	1	3	75	13	1750	15	50

Sampler:	Date:
Analyst:	Lift Depth:

Comments:

Table 6. Real-Time Air Sampling Results.

SAMPLER:	DATE/ TIME:	LIFT #:
TEMPERATURE:	WIND SPEED:	WIND DIRECTION:
REL. HUMIDITY:	BAROMETER:	SAMPLE SET:
MONITOR USED: MIE	PPM	BOTH

LOCATION	RESULTS	COMMENTS	LOCATION	RESULTS	COMMENTS
1			11		
2			12		
3			13		
4			14		
5			15		
6			16		
7			17		
8			18		
9			19		
10			20		

ADDITIONAL COMMENTS: (

Indicate sample locations on the map provided below:

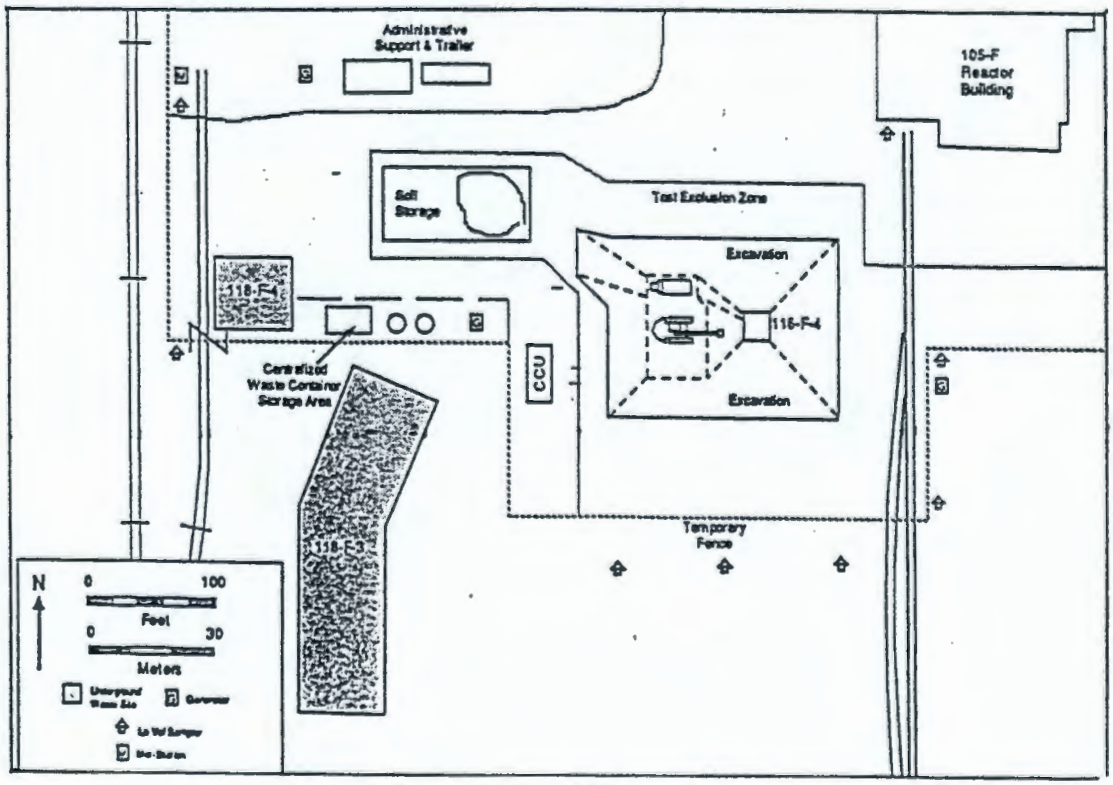

9313090.1754

APPENDIX A

EQUIPMENT LIST

HEALTH AND SAFETY EQUIPMENT

The following represents a brief summary of the equipment required to conduct the test activities in a safe fashion. The list below is not considered all inclusive, and additional items may be required as determined by the Site Safety Officer and Health Physics Technician.

- HWOP and RWP posted at site
- GM and PAM
- protective clothing (white and blue coveralls)
- gloves, hardhats, steel-toed footwear, earplugs, safety glasses
- eye wash, first aid kit, bug bite kit
- wet and dry bulb thermometers, globe thermometer
- drinking water
- wash water
- heavy duct tape, masking tape
- respiratory protection equipment, masks
- air conditioned change facilities
- cellular phone
- training records

9313090.1755

ADMINISTRATIVE EQUIPMENT

The following represents a brief summary of the equipment required to conduct the administrative activities. The list below is not considered all inclusive, and additional items may be required as determined by the field team leader (FTL).

- Field Logbook
- calculator
- RWP, HWOP, procedures, sample plan
- working documentation
- pens, sharpies, pencils
- HEIS numbers
- manufactures' operator's manuals for the appropriate equipment
- air conditioned administrative trailer
- cellular phone
- training records
- generator and fuel

EXCAVATION EQUIPMENT

The following represents a brief summary of the equipment required to conduct the excavation activities. The list below is not considered all inclusive and additional items may be required as determined by the supervisor of the excavation activities.

- tractor, backhoe, trucks
- barricades
- waste drums, labels, and associated packaging
- measuring tape
- shovels

RADIOLOGICAL SCREENING EQUIPMENT

The following represents a brief summary of the equipment required to conduct the radiological screening activities. The list below is not considered all inclusive, and additional items may be required as determined by the cognizant engineer/scientist. This list does not include equipment under the control and/or supervision of health physics personnel.

- ATV (all terrain vehicle) and towing assembly
- detector assembly
- soil standards for detector calibration
- detection hardware and software
- 16x16x4-in. NaI(Tl) gamma detector (Geometrics/Harshaw), primarily for ^{137}Cs and gross gamma
- 3x3-in. NaI(Tl) gamma detector (Bicron), primarily for ^{137}Cs and gross gamma and used as a backup detector
- 35% efficiency hyperpure germanium gamma detector (Princeton Gamma Tech) for all gamma-emitting radionuclides including ^{241}Am when not much ^{137}Cs is present
- 10-in. plastic scintillating beta detector (out for bid vendor not selected yet), will detect all beta emitters, but primarily ^{90}Sr
- 24x24-in. plastic fiber scintillating detector (PNL), will detect all beta emitters, but primarily ^{90}Sr. NOTE: The size is not finalized.

9313090.1756

1.0 TEST OVERVIEW

1.1 TEST OBJECTIVES

The dust suppression test program is designed to assess the effectiveness of various dust control techniques and agents. This appendix provides details on the dust suppression test program. Excavation details have been provided in the body of the procedures.

1.2 TEST OUTLINE

The test program has been separated into four phases of field testing as shown below in Table BT-1. The first three phases are to evaluate methods of dust control during the excavation operation and the fourth phase is to evaluate crusting agents during operational down-times.

9313090.1757

Table BT-1. Dust Control Test Phases.

Phase	Depth (ft)[a]	Lift#[a]
Phase 1: No Water Addition[b]	1-2	1
Phase 2: Water Spray	2-16	1-3
Phase 3: Water with Additives	6-25	4-12
Phase 4: Crusting Agents	1-25	All

[a]The depth and lift numbers are approximate. Actual field conditions will dictate the schedule for each phase of testing.

[b]The surface soils will be surveyed for radiological contamination prior to and during excavation activities. If levels indicate contamination greater than background, or if indicated by the Health Physics personnel, Phase 1 will be discontinued and water sprays will be used to prevent the spread of contamination. If phase 1 is discontinued, the tests of "no water addition" will be conducted after the completion of excavation in the clean spoil piles or on the clean edges of the excavation.

2.0 TEST PROCEDURES

2.1 PRE-TEST

One to two weeks prior to the beginning of the excavation operation, the air samplers will be set up to monitor ambient conditions prior to disturbing the site. Sample papers will be collected at the end of each week and analyzed as discussed in Appendix C, "Sampling and Analysis Plan."

2.2 NO WATER ADDITION

No water addition for dust suppression will take place over the first 2 days of the excavation. The objective of this test program is to define a baseline dust generation for excavation and a baseline soil moisture content. If site conditions prevent this phase of the test during the first few days, the "no water" tests will be conducted on the clean spoil piles after the excavation is complete, or on the clean edges of the excavation.

2.3 WATER SPRAYS

Water sprays for dust suppression will be performed after the second day of excavation . This phase will be divided into two parts. The first will assess the effectiveness of the standard method of water spraying for dust control. The second will evaluate the DRYFOG Ultrasonic Misting System, manufactured by Sonics Inc., which is contained in the Contaminated Control Unit (CCU) obtained from Idaho National Engineering Laboratory (INEL).

2.3.1 Standard Water Sprays

Water spraying will be performed using portable, standard fog-spray nozzles that are typically used in construction. Spraying will occur at the excavation cut surfaces, contaminated soil storage unit, and at the stockpile areas. Water spraying of the potential dust generation locations will be performed on an as-needed basis, with the objective of using the minimum quantity of water required to maintain the dust levels below allowable levels, as measured by real-time dust monitoring and visual observations.

During the water spraying, note the following on the data sheet (Figure BF-1):

a. Volume of water applied
b. Visual observation of effectiveness
c. Description and duration of activity
d. Volume of dirt moved
e. If a real-time dust reading was taken
f. General comments

The following general procedure will be used:

1. Ensure tank is filled with water.

2. Ensure nozzle is attached to hose. Record the type of nozzle that is attached.

3. Record beginning water meter reading and time on data sheet.

9313090.1258

DATE: _____ NAME: _____ LIFT: _____

Truck load #	Pit area	Soil		Pit-water usage		TerraStor-water usage		Comments - visual observations
		Moist	Dry	Digging/loading	Area spray	Dumping	Area	

Figure BF-1. Dust Control Data Sheet.

4. Begin spraying down area, noting the information listed above. Attempt to spray just enough water to adequately contain dust. Do not over saturate the area.

5. Repeat steps 3-4 for each water spray application.

2.3.2 Misting System

The misting system which is part of the CCU will be evaluated. This system utilizes a specially designed nozzle to mix air and water to create a fine cone of mist. The CCU contains a 300-gal tank for water supply, a compressor to supply air to the misting system, and a pump to provide water pressure at the misting heads. The trailer is designed to operate up to six heads, either individually or in tandem. The misting heads can be placed in strategic positions to provide dust control as deemed appropriate. For example, the misting system might be of use at the TerraStor, during dumping, or on the truck. Since there are a number of hoses leading to the misting heads, field conditions will determine placement and optimal use. The field data sheets will document location of heads, volume of water used, and effectiveness.

The misting system heads will be positioned at strategic locations over the dig area that does not interfere with ongoing operations. The misting system will be operated per the instructions for operation of the CCU.

9313090.1760

2.4 WATER WITH ADDITIVES

This test program will replicate the work of the Phase 2 program; however, the effectiveness of the addition of surfactant will be assessed.

Two surfactants will be tested, for two consecutive days each. The two surfactant chosen are EMC Squared H2O+ (manufactured by Soil Stabilization Products Co. Inc.), and MSDC (manufactured by Pico Chemical Corporation).

The water/surfactant mixture will be prepared according to Table BT-2 and will be applied using portable, standard fog spray nozzles. Spraying of the potential dust generation locations will be performed on an as-needed basis, with the objective of using the minimum quantity of water required to maintain the dust levels below allowable levels, as measured by real-time dust monitoring and visual observations.

Table BT-2. Additive Dilution Factors.

Surfactant[a]	Dilution-Per 1,000 gal[a]		
MSDC	4 pints/1,000 gal	8 pints/1,000 gal	Optional mixtures
EMC Squared H_2O	4 pints/1,000 gal	8 pints/1,000 gal	

[a]The brand of surfactant and the dilution rates may be altered at the discretion of the field team leader, based on either field conditions, product availability, or new information about other products. Actual product used and dilutions rates will be recorded in the field logbook.

During the water/additive spraying, note the following on the data sheet (Figure BF-1):

a. Type of additve and dilution
b. Volume of water applied
c. Visual observation of effectivness
d. Description and duration of activity
e. Volume of dirt moved
f. If a real-time dust reading was taken
g. General comments

The following general procedure will be used.

1. Ensure tank is filled with the specified amount of water. Add appropriate amount of surfactant (see Table BT-2).

2. Ensure nozzle is attached to hose. Note type of nozzle being used.

3. Record beginning water meter reading on data sheet.

4. Begin spraying down area, noting the information above. Attempt to spray just enough water/additive to adequately dontain dust. Do not over saturate the area.

5. Repeat steps 3-4 for each spray application.

9313090.1761

Table BT-3. Crusting Agent Dilution and Application Guidlines.

Crusting agent[a]	Dilution ratio[a]	Application rate (gal/yd^2)
Road Oyl	4:1	1
	10:1	1
	4:1	0.5
	10:1	0.5
Lignosite	2.5:1	0.5
	5:1	1
	5:1	0.5
	10:1	1
Soil Seal	30:1	2
	40:1	2
	30:1	0.5
	40:1	0.5

9313090.1762

2.5 PHASE 4: CRUSTING AGENTS

Crusting agents will be tested during the excavation test. Four crusting agents will be tested during the course of the test. The products chosen are Road Oyl (a registered trademark of Road Products Corp.), Lignosite (a registered trademark of Georgia-Pacific), Soil Seal Concentrate (a registered trademark of the Soil Seal Corporation), and XDCA (a registered trademark of the SynTech Product Corporation). Each crusting agent will be tested in different areas of the site throughout the test.

The CCU unit will be used to apply the crusting agent. The crusting agent solution will be applied to the cut surfaces in the excavation, staging area, contaminated soil, trafic areas, and soil stockpile surfaces. XDCA will be used on the cut surfaces of excavation and on the contaminated soil, because it is water soluble and will be compatible with soil washing.

If dust measurements or visual observations indicate that allowable dust levels are being exceeded onsite, additional crusting agent may be applied. The additional applications of crusting agent will be recorded.

During the application of the crusting agent solution, accurate records will be kept for the volume of water applied, volume of crusting agent applied, number of applications, and time of application.

Crusting Agent Preparation: The amount of crusting agent required for each application will depend on the surface area, application rate, and dilution factor. The crusting agents will be applied to the cut surface, contaminated soil pile, high trafic areas, and clean soil pile(s). The field team leader or CCU operator will estimate the surface area and will calculate the volumes of water and agent required.

If the excavation proceeds longer than planned, the above mixes can be varied based on observed results to optimize the preferred dust control agent. The field team leader will be responsible for identifying any additional mixes to be tested.

The following general procedure shall be used to apply the crusting agent.

1. Prior to applying crusting agent, ensure soil has been premoistened slightly.

2. Prepare the crusting agent in the CCU. Record information on Figure BF-2.

   a. Empty the designated amount of crusting agent into the 300-gal supply tank (part of the CCU).

   b. Fill the supply tank with water.

   c. Pay out hose to the application area.

   d. Apply the crusting agent at the designated application rate per operating instructions of the CCU.

   NOTE: If large volumes of the crusting agent solution are required, mix the crusting agent in the water tank and connect the water tank hose to the CCU pump.

3. Note the crusting agent, area of apliication, dilution, volume, and any visual observations of the crusting agent data sheet.

4. Repeat the above steps as needed.

5. Crusting agents will be reviewed daily and comments shall be noted on the data sheet, Figure BF-3.

9313090.1763

Figure BF-2. Spray Application Data Sheet.

OBSERVER:	DATE:	TIME:
PRODUCT USED:	DILUTION RATE:	
LIFT/DEPTH OF EXCAVATION:	CONTAMINATION DETECTED? YES NO	
TIME ON/TIME OFF	APPLICATION RATE AND ESTIMATE OF AREA COVERED	GENERAL COMMENTS (nozzle type, effectiveness, odors, ease of use, penetration depth, visual observation of effectiveness)

SITE SKETCH (if necessary to describe product_usage):

9313090.1764

Figure BF-3. Daily Review of Crusting Agents.

NAME: DATE: SHIFT: AM PM

CRUSTING AGENT:
AREA OF APPLICATION: DILUTION: VOLUME:
VISUAL OBSERVATIONS OF EFFECTIVENESS:
COLOR THICKNESS
STRENGTH BRITTLE OR ELASTIC
ANY SIGNS OF DISTRESS/WEARING?

OTHER NOTES

CRUSTING AGENT:
AREA OF APPLICATION: DILUTION: VOLUME:
VISUAL OBSERVATIONS OF EFFECTIVENESS:
COLOR THICKNESS
STRENGTH BRITTLE OR ELASTIC
ANY SIGNS OF DISTRESS/WEARING?

OTHER NOTES

CRUSTING AGENT:
AREA OF APPLICATION: DILUTION: VOLUME:
VISUAL OBSERVATIONS OF EFFECTIVENESS:
COLOR THICKNESS
STRENGTH BRITTLE OR ELASTIC
ANY SIGNS OF DISTRESS/WEARING?

OTHER NOTES

9313090.1765

9313090.1766

3.0 FIELD MONITORING AND SAMPLING ACTIVITIES

3.1 CONE PENETROMETER GAMMA SURVEYS

A cone penetrometer will be used to provide in situ gamma radiation measurements in the crib prior to excavation. Penetration testing will be conducted using a 1.75-in.-outside diameter rod, using a truck with a capability of at least 60,000 lb. The testing will be conducted to locate the center (or area with the greatest concentration of contaminants) of the 116-F-4 Pluto Crib. The radiation will be detected using a sodium-iodide scintillator. The scintillator will be calibrated prior to initial measurements. Records of the baseline calibration will be maintained by Applied Research Associates (ARA) personnel and submitted to the field team leader. Once the center point has been established, 12 additional points will be placed as shown in Figure CF-1 to establish a sampling grid. The sample locations will be placed 3 ft apart on two perpendicular lines that intersect at the center point of the crib. The center cone rod will be used as a benchmark to locate each of the sampling points during the excavation. The line of samples in the east-west direction shall be located parallel with the fence, which will provide easy reference for soil samplers during the excavation. It is estimated that up to five bores may be needed to locate the center point. These bores will not exceed 35 ft in depth. Of the 12 additional points, 6 may go to a depth of 35 to 40 ft to determine the maximum depth of contamination. The remaining six will not exceed 25 ft in depth. Depth of bore may be limited due to refusal of underground objects. If maximum depths do not reach 25 ft, as much data as possible will be collected from the shallow holes.

All casing, with the exception of the center casing, will be backpulled using a Westinghouse Hanford Company (WHC) supplied backhoe or a crane. The center casing will be used during the excavation to locate soil sample points to correlate with the cone penetrometer samples. The casing will be surveyed for radiological contamination and may be retained by WHC if found to be contaminated. Decontamination, storage, and disposal will be conducted according to EII 4.4 procedures as necessary (WHC 1988).

3.2 RADIATION SURVEYS AND SAMPLE COLLECTION

Survey and sampling locations for the radiological surveys have been based on a statistical approach developed in the test plan (DOE-RL 1993a). The survey and sampling pattern is shown in Figure CF-2. Exceptions to the plan may be made for observed discoloration, excessive moisture, high dose rate, obvious changes in the soil consistency, and other anomalies in order to best delineate the area of contamination. A minimum of 16 survey and samples will be taken from each lift, and each of these points must be mapped and logged.

Field radiation detection using the test instruments will be performed by Special Analytical Studies scientists and technicians from the 222-S Analytical Laboratory. Surveys will be conducted using Sodium Iodide and High Purity Germanium detectors for gamma and two types of beta detectors.

9313090.1767

Figure CF-1. Cone Penetrometer Sampling Points.

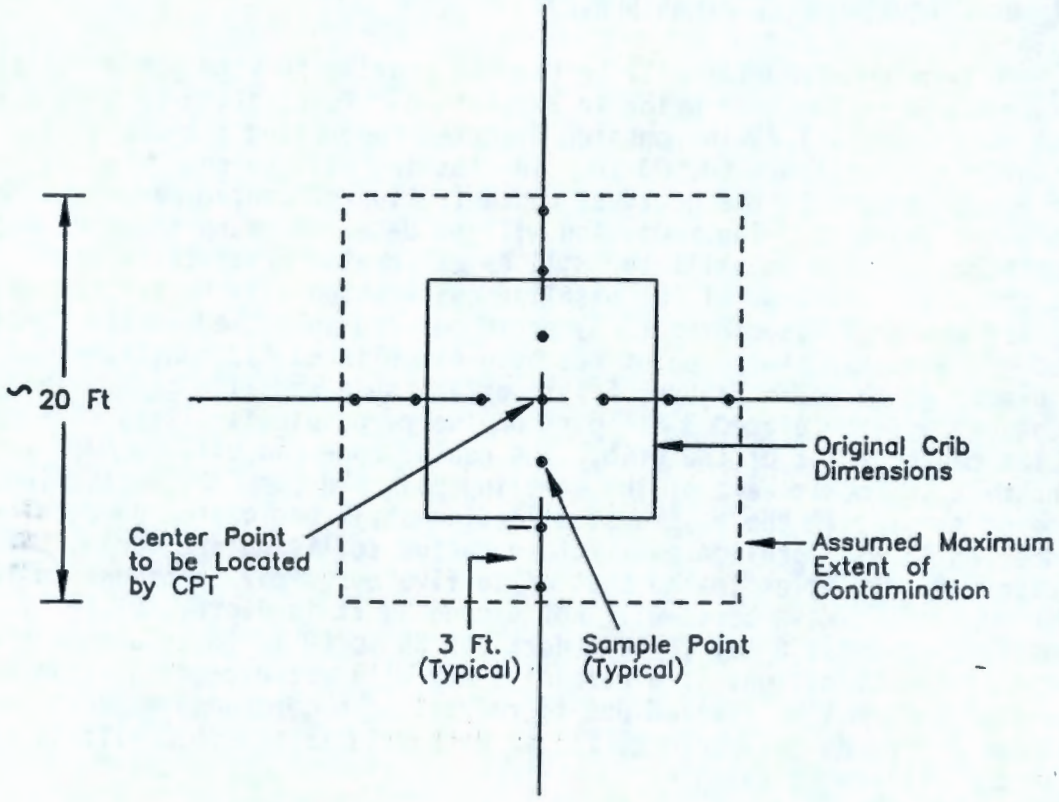

Not to Scale

JMF\071593-A

9313090.1768

The following detectors will be mounted on the detector cart:

- 16x16x4-in. NaI(Tl) gamma detector
- 3x3-in. NaI(Tl) gamma detector (backup)
- 35% efficiency hyperpure germanium gamma detector
- 10-in. plastic scintillating beta detector
- plastic fiber scintillating detector developed by Pacific Northwest Laboratory (PNL).

Some of these detectors may be positioned directly on the ground during surveys. The cart will also contain standard Nuclear Instrument Module (NIM) instrumentation. Lead will be used to collimate the gamma detectors and to shield them from unwanted background radiation. This cart will be built with large pneumatic wheels and is expected to weigh approximately 600 lb fully loaded.

9313090.1769

3.2.1.1 Soil Standards and Instrument Calibration. Instrument calibration is performed by comparing the instrument response from the sample to that of the standard. Most standards will be made from National Institute of Standards and Technology (NIST) traceable materials when practical. Europium and natural activity standards will be made from noncertified material and assayed by the 222-S laboratory, which calibrates its detectors from NIST traceable materials.

3.2.1.1.1 Gamma-Ray Standards. The gamma-ray detectors are sensitive to a larger volume of soil than is realistic to make standards, so differences will be taken into account between the geometry of the standards and samples. It would be cost prohibitive to make a large volume standard for every isotope. Differences between the geometry of the standard and soil will be accounted for by a combination of the following three methods.

1. A 2-in.-thick large area standard will be counted. Then an equal thickness blank will be stacked on top and it will be re-counted. Then another blank will be placed on top and counted again. Then the spectra will be summed together to yield an equivalent spectra for a thick soil.

2. A 2-in.-thick small area standard of one isotope will be counted. Then a 2-in.-thick large area standard of the same isotope will also be counted. A ratio will be determined between the detector response from the small to the large area standard. This ratio will then be applied to other isotopes.

3. Calculations of the radiation flux at the detector will also be made for the geometry of standard geometry and the geometry of the soil. Flux calculations will be performed using the computer model Microshield, and verified with hand calculations. Flux calculations will be used to make minor adjustments between the standard and soil.

The concentration of transuranic radionuclides will be estimated from the quantity of ^{241}Am detected. The average ratio between ^{241}Am and plutonium in Table CT-1 will be used for this conversion.

Reported activity will be corrected for rocks. Rocks are not included when sampling soil for laboratory analysis, but are measured in situ. Activity is attached to surfaces, and the fine particles have far more surface area per unit weight than do rocks. Thus, the specific activity (pCi/g) is different for rocks and sand from the same soil. A 5-gal bucket of soil will be screened and weighed at each excavation lift to determine the weight percent fines. The reported activity will be the measured value divided by the weight percent fines.

3.2.1.1.2 Beta Detectors. The beta detectors will be calibrated directly against soil spiked with the isotopes of interest. The soil volumes will be large enough to cover the entire face of the detector and will be thick enough to behave like an infinitely thick sample.

Rocks will not be a problem because the measurement is just a surface measurement, and the rocks will be raked aside before making the measurement.

3.2.1.2 Data Storage and Reduction. Multichannel spectral data will be collected and stored from the output of the detectors. To minimize radiological exposure and personnel heat stress, data will be reduced in a post-acquisition fashion after collecting all the data associated with each excavation lift. It is expected that all data will be processed by the end of each work day.

NaI(Tl) spectra taken from higher activity regions containing clear and unobscured photopeaks will be reduced to radionuclide activity by comparing the net photopeak area to standards. Photo peak areas will be found using commercial analysis software. Spectra from lower activity regions of soil containing obscured photopeaks will be reduced from region of interest (ROI) counts to radionuclide activity by solving simultaneous equations using commercially available software. Both approaches require single isotope standards for all the major radioelements in the sample.

High Purity Germanium (HPGe) spectra will be reduced to radionuclide activity from net photopeak areas using commercially available software. An energy versus detector efficiency calibration curve will be developed from a single multiple energy standard. Isotope-specific standards will not be required.

The shape of the 10-in.-diameter plastic scintillator beta spectra will be used for isotope identification. Identification of either ^{99}Tc or ^{90}Sr will be made for those spectra that clearly match known spectra of those isotopes. No attempt will be made to quantify more than one isotope from each spectrum. Spectral data will be reduced to ^{90}Sr activity by summing the total counts in a broad high energy ROI and comparing to a ^{90}Sr standard. This ROI will be set above the energy of ^{137}Cs conversion electrons. In the unlikely event that pure ^{99}Tc is observed, the total counts in a broad low energy ROI will be compared to a ^{99}Tc standard. Technetium-99 results should be treated as semiquantitative, and the results should be used only for indication purposes.

Data from the PNL Large Area Beta detector will be reduced to ^{90}Sr activity based on the total number of beta events that are energetic enough to penetrate through three different layers of scintillating fibers. As the beta

9313090.1720

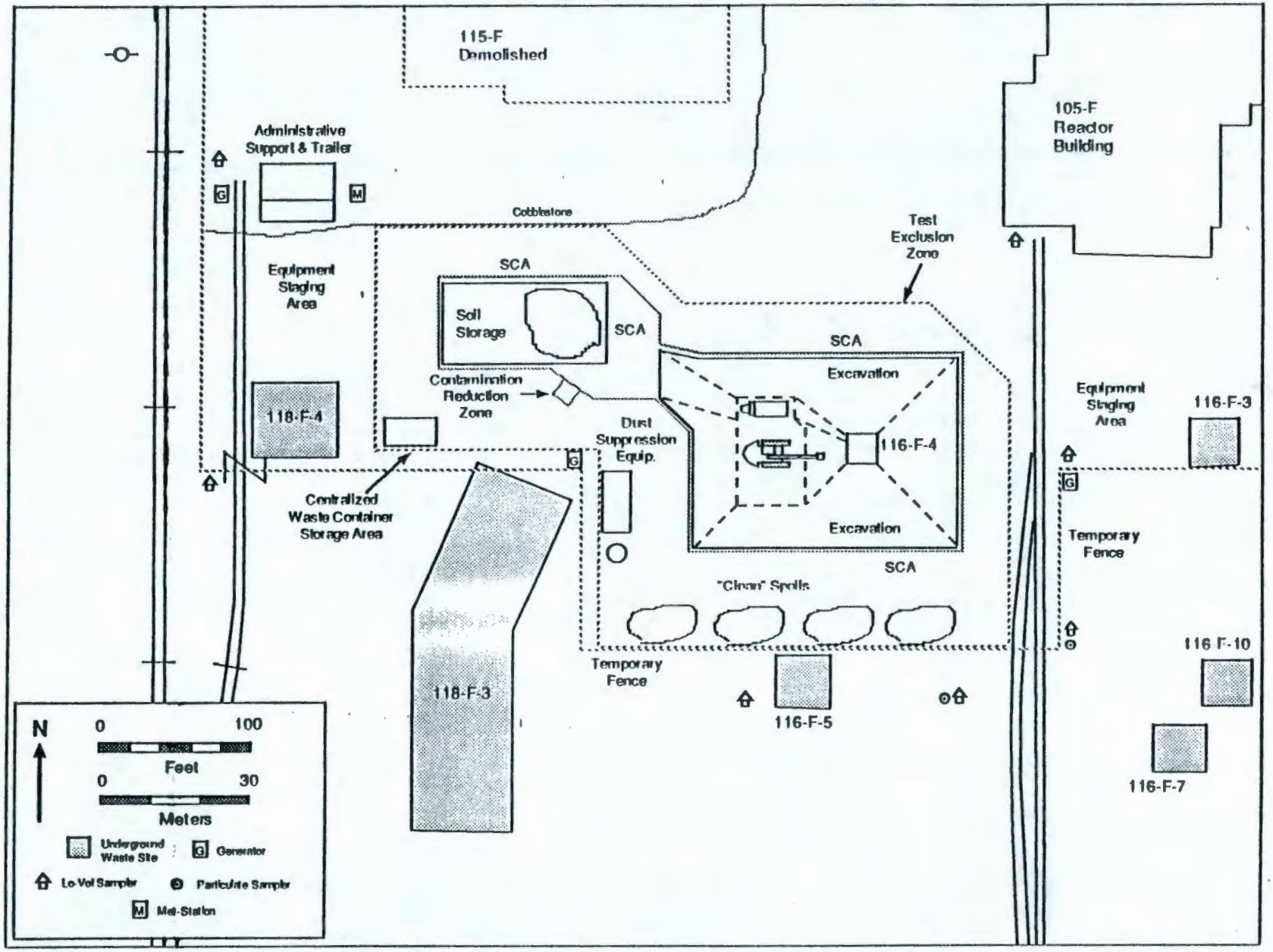

Figure CF-3. Location of Air Samplers.

3.4.2 Real-Time Air Monitoring

Real-time air monitoring measurements will be taken at 20 locations at the beginning and end of each shift to obtain a baseline. Measurements will also be taken during the excavation activities as a real-time observation of the dust control effectiveness. Additional measurements will be taken at the direction of the cognizant engineer (e.g., during times of high winds or when visible dust is present).

The locations for the real-time total dust air monitoring will be based on the daily wind directions and will be indicated on a site map daily. The monitoring points will be taken in the order to form a circuit around the excavation. Prior to the start of the circuit, wind direction will be established. The locations of the monitoring points will be determined by the sample technician so that the samples are obtained both upwind and downwind of the area/dust source of interest. The upwind points are important to determine the amount of dust entering the site and what effect the nearby buildings are having on wind patterns (i.e., shedding of vortices may cause significant turbulence upwind of the site). In order to accurately record the reading locations, a standard site map will be prepared, and a map showing actual monitoring locations will be completed for each sampling circuit.

Real-time air monitoring will consist of noting readings from the meter. Readings will be obtained at the designed locations and will be noted on the data sheet. To record the actual locations of the sample readings, the reading locations will be marked on a site map for each circuit, with the sample designations also noted beside the location marker. The readings will be recorded on a master sample log.

Additional measurements will be taken during excavation activities, and other dust-generating times to determine the effectiveness of dust control agents.

3.4.3 Personal Air Samplers

Personal air samplers will be worn by the backhoe operators and the sample technicians working in the exclusion zone. New filters will be installed at the start of each work day and collected at the end of the work day per approved Hanford Environmental Health Foundation (HEHF) procedures and protocol.

HEHF shall have the responsibility of operating, controlling, and analyzing the personal air samplers.

3.4.4 Soil Moisture Content

Soil moisture samples will be taken from the 12 locations each lift, in locations the same as the field rad surveys on the perpendicular grid. This sampling program will result in approximately 200 to 250 moisture content samples collected during the entire test program, and a larger number of samples may be collected as determined by the field team leader.

9313090.1772

Moisture content samples will be obtained by collecting approximately 200 to 300 g of representative soil in a preweighed aluminum moisture container. The container should not be filled completely, so as to avoid contamination spread when the containers are opened in the laboratory. The lid should be placed on the container securely, and shall be secured with 1-in. plastic tape around the edges of the lid.

The container will be labeled with the unique sample number, which will indicate the location of the sample, date, and sample number. The sample log will indicate the sample number, sample location, the lift it was obtained from, whether the sample was obtained at the end of an excavation lift or following application of a dust suppression measure, and other relevant information.

3.4.5 Meteorological Station

The meteorological station will be located in the support zone as close to the work area as practical. The meteorological station will provide data on wind speed, wind direction, temperature, relative humidity, and barometric pressure. The data will recorded electronically and will be downloaded weekly. The information will also be recorded on the dust control data sheets as a back-up.

9313090.1773

4.0 SAMPLE COLLECTION, HANDLING, AND LABELING

Following collection, samples shall be controlled in accordance with the requirements outlined in EII 5.2, "Soil and Sediment Sampling" (WHC 1988). EII 5.2 provides general guidance for containers and preservation requirements. The contractor laboratory may request modifications to these recommendations as long as the quality of the data is not compromised. Sample containers are purchased precleaned from a supplier providing certification of internal laboratory procedures. All soil samples shall be labeled, sealed, and placed in a container for preservation on ice or other appropriate cooling medium.

HEIS is used to track the sample and laboratory data obtained during environmental investigations conducted under this description of work. Each soil sample shall be identified and labeled with a unique HEIS sample number. HEIS numbers shall be assigned in the field per EII 5.10 (WHC 1988). The sample location and corresponding HEIS numbers shall be documented in the field logbook.

4.1 FIELD LOGBOOKS

Field activities shall be recorded in a field logbook according to the protocols outlined in EII 1.5, "Field Logbooks" (WHC 1988). Entries shall be made in ink, signed, and dated.

4.2 CHAIN OF CUSTODY

Chain-of-custody records shall be maintained in accordance with the requirements of EII 5.1, "Chain-of-Custody" (WHC 1988). The chain-of-custody form shall ensure the traceability of the sample from time of collection until disposal.

4.3 SAMPLE ANALYSIS REQUEST

An approved laboratory shall be used to conduct laboratory analyses. The request for appropriate analyses shall be included on the WHC sample analysis request form as provided in EII 5.2, "Soil and Sediment Sampling." Laboratory specific forms may be utilized in lieu of the WHC form and shall be made available by the Hanford Analytical Sample Management Organization (HASM).

9313090.1774

4.4 DECONTAMINATION

Hand-held equipment used for the direct collection of samples shall have been previously cleaned in accordance with EII 5.5, "Decontamination of Equipment for RCRA/CERCLA Sampling." Cleaning of backhoe equipment in the field shall follow the requirements outlined in EII 5.4, "Field Decontamination of Drilling, Well Equipment, and Sampling Equipment." All associated activities shall be recorded in the field logbook.

4.5 SHIPPING

Shipping requirements shall conform with EII 5.11, "Sampling Packaging and Shipping" (WHC 1988).

5.0 WASTE HANDLING

Waste materials associated with sampling will be composed mainly of used personal protective equipment and packaging materials and shall be handled in accordance as described in Appendix B and the regulator-approved Waste Control Plan. Materials that have not contacted the potentially contaminated soil shall be segregated from the contaminated materials.

Potentially contaminated items shall be placed in reinforced polyethylene bags and sealed with tape. Each bag shall be labeled with the sample number associated with the sample location and shall be placed in a drum for storage at the site until the soil samples are analyzed. The drums shall be given a unique tracking number and shall be labelled with an Interim Control of Unknown, Suspected Hazardous Waste Form (IC Form).

The material will be designated for waste disposal per the sample analysis results, using the worst-case sample results for each drum's contents. Drums will remain at the site in accordance with the IDW waste control plan.

Excavated soil will be handled per the waste control plan for this project.

6.0 SAMPLE ANALYSES

6.1 RADIOLOGICAL AND CHEMICAL SAMPLES

Samples analyzed for chemical constituents shall be analyzed using the current CERCLA CLP methods for organic compounds and inorganic analytes.

Contract-approved methods shall be used for selected radiological analyses (Level V). Radiological analyses shall include the isotopes and detection limits shown in Table CT-4.

9313090.1775

Table CT-4. Radionuclides Sample Analysis.

Radionuclides	Minimum detection limits (pCi/g)
^{241}Am	20
^{152}Eu	3
^{154}Eu	3
^{155}Eu	100
^{60}Co	1
^{137}Cs	3
$^{239/240}Pu$	75
^{90}Sr	13
^{99}Tc	1750
^{235}U	15
^{238}U	50

The analytical results must meet these detection limits as a minimum. The laboratory has been requested to provide detection limits at 1/10th of these values.

The soil samples collected from the clean spoil piles and the excavation verification samples will be analyzed to verify that the soil is clean and suitable for free release. The analyses required for these samples are presented in Table CT-5.

Table CT-5. Hazardous Material Sample Analyses.

Parameters of interest	Analytical method (TMA/Weston)	Target detection limit	Precision (soil)	Accuracy (soil)
ALL SAMPLES				
TAL Metals	CLP	CRDL[a]	±35%	75-125
Nitrite/Nitrate	EPA 353.2	1.25 mg/kg	±35%	75-125
Anions: ammonia fluoride sulfate chloride phosphate	EPA 300	NA 2.5 mg/kg 1.25 mg/kg 1.25 mg/kg 1.25 mg/kg	±35%	75-125
Total activity	LA-548-111 LA-508-121	50 pCi/g		
Volatile organics[c]	CLP	CRDL[a]	b	b
Semivolatile organics[c]	CLP	CRDL[a]	b	b

[a]For all CLP analytical categories, CRDL refers to the Contract Required Detection Limit specified in the CLP Statements of Work (EPA 1990a, 1990b).

[b]Precision and accuracy as defined in the CLP Statements of Work (EPA 1990a, 1990b).

[c]For the clean spoil piles only samples from the first lift, the center of the crib, and the last lift will be analyzed for these parameters.

6.2 DUST CONTROL SAMPLE ANALYSIS

6.2.1 Air Samplers

Immediately following collection, the filters will be screened for radiation by the HPT using hand-held equipment. Filter papers will be transferred to the Geotechnical Engineering Laboratory at the 377 Building in the 300 Area. The filters will be weighed to obtain the total weight of material retained during the time of exposure (gravimetric analysis, EPA 1975). The laboratory analytical report will provide the amount of dust collected on the filter as micrograms. The volume of air drawn through the filter over the sampling period is recorded for each sample using the air sampler totalizer. The total weight of the dust retained on the filter is divided by the volume of air in the sample to obtain results expressed as micrograms per cubic meter.

6.2.2 Real-Time Air Monitoring

Real-time air monitoring will be performed according to the manufacturer's directions for use, and the results will be noted on the sample log for correlation with the field activity logs and other data.

9313090.1776

DISTRIBUTION SHEET

To	From	Page 1 of 1
DISTRIBUTION	LM BERGMANN	Date 10-18-93
Project Title/Work Order		EDT No.
100 AREA EXCAVATION TREATABILITY TEST		ECN No. 197995

Name	MSIN	Text With All Attach.	Text Only	Attach./ Appendix Only	EDT/ECN Only
JM FRAIN	H6-04	1			
GS CORRIGAN	H4-16	1			
JM AYRES	H6-02	1			
DB BLUMENKRANZ	H6-04	1			
LM BERGMANN	H6-05	1			
EPIC	H6-08	2			
CENTRAL FILES	L8-04	2 & ORGINAL			

9313090.1777

A-6000-135 (01/93) WEF067

THIS PAGE INTENTIONALLY
LEFT BLANK