1248693
[00LW028H]

Department of Energy
Richland Operations Office
P.O. Box 550
Richland, Washington 99352

APR 1 0 2018

18-ESQ-0054

Ms. Alexandra K. Smith, Program Manager
Nuclear Waste Program
Washington State Department of Ecology
3100 Port of Benton Boulevard
Richland, Washington 99354

Dear Ms. Smith:

CLASS 1 MODIFICATIONS TO THE HANFORD FACILITY RESOURCE CONSERVATION AND RECOVERY ACT PERMIT, QUARTER ENDING MARCH 31, 2018

In accordance with the Hanford Facility Resource Conservation and Recovery Act Permit, Dangerous Waste Portion for the Treatment, Storage, and Disposal of Dangerous Waste (Permit) Condition I.C.3, enclosed are Class 1 permit modification documents for the quarter ending March 31, 2018.

The enclosed modification package updates information in Part III of the Permit Revision 8C. The changes address the Liquid Effluent Retention Facility and 200 Area Effluent Treatment Facility, the 325 Hazardous Waste Treatment Units, the Waste Treatment and Immobilization Plant, and the 300 Area Process Trenches. The modifications are being made to ensure activities are conducted in compliance with the Permit. A record of the modifications is maintained in the Hanford Facility Operating Record.

The U.S. Department of Energy Richland Operations Office and the Washington State Department of Ecology use Permit Change Notices (PCNs) to help track Class 1 permit modifications. This modification package addresses the following PCNs:

PCN Identifier:	Affected Permit Section:
PCN-LERF/ETF-2017-01	OUG-3, Unit Specific Conditions and Addenda B and D
PCN-LERF/ETF-2017-02	OUG-3, Unit Specific Conditions and Addenda C, I, and F
PCN-325-2018-01	OUG-5, Unit Specific Conditions and Addendum J
24590-LAW-PCN-ENV-16-008	OUG-10, Appendices 9.1, 9.9, and 9.11
24590-LAW-PCN-ENV-17-005	OUG-10, Appendices 9.2, 9.6, and 9.7
24590-LAW-PCN-ENV-17-011	OUG-10, Unit Specific Conditions (Table III.10.H.G)
PCN-300APT-2018-01	PCU-1, Unit Specific Conditions and Chapter 3.0

RECEIVED
APR 1 1 2018
EDMC

H-0-1 T-2-6 H-0-8
S-2-8 T-3-4

If you have any questions, please contact me, or your staff may contact William F. Hamel, Assistant Manager for Safety and Environment, at (509) 376-6727.

Sincerely,

Doug S. Shoop
Manager

ESQ:ACM

Enclosure:
Class 1 Modifications to The Hanford Facility Resource Conservation and Recovery Act Permit

cc w/encl:
Debra J. Alexander, Ecology (CD)
Rob G. Hastings, ORP (CD)
Jennifer L. Cantu, Ecology (CD)
Administrative Record, TSD: H-0-1, S-2-8, T-2-6, T-3-4, and H-0-8 (Hardcopy & CD)
Ecology NWP Library (Hardcopy & CD)
Environmental Portal, G3-35 (CD)
HF Operating Record, (J. K. Perry, MSA, A3-01) (CD)

cc w/o encl: See page 3

cc w/o encl:
Lucinda E. Borneman, WRPS
Robert E. Bullock, CHPRC
Annette S. Carlson, Ecology
Berry L. Curn, URS
Laura J. Cusack, CHPRC
Suzanne L. Dahl, Ecology
Leah R. Hare, CHPRC
Per E. Eberlein, CHPRC
Mark D. Ellefson, PNNL
Rana L. Evans, ORP
William R. Faught, CHPRC
Randal E. Fox, CHPRC
Mandy E. Jones, Ecology
Chris J. Kemp, ORP
Paul W. Martin, CHPRC
Sandy Murdock, BNI
Gae M. Neath, ORP
Brett Peck, BNI
Debra G. Singleton, CHPRC
Ron R. Skinnarland, Ecology
Suzette A. Thompson, WRPS
Harold T. Tilden, PNNL
Robin E. Varljen, WRPS
Michael B. Wilson, MSA
Donna M. Yasek, BNI

ENCLOSURE

Class 1 Modifications for Quarter Ending March 31, 2018

Consisting of 410 pages,
including this cover page

Hanford Facility RCRA Permit Change Notice

Part III, Operating Unit Group 3

Liquid Effluent Retention Facility & 200 Area Effluent Treatment Facility

Page	Permit Section
Page 2 of 4:	Part III, Operating Unit Group 3, Permit Conditions
Page 3 of 4:	Addendum B, Waste Analysis Plan
Page 4 of 4:	Addendum D, Groundwater Monitoring Plan

Submitted by WRPS Co-Operator:

D. Kent Smith — Date: 11/30/17

Reviewed by DOE-ORP Program Office:

Glyn D. Trenchard — Date: 11/30/17

Hanford Facility RCRA Permit Change Notice

Unit:	Permit Part
Liquid Effluent Retention Facility & 200 Area Effluent Treatment Facility	**Part III, Operating Unit Group 3**

Description of Modification:

Part III, Operating Unit Group 3 Permit Conditions:

Updated Change Control Log, Modification History Table, and the following List of Addenda Specific to Operating Unit Group 3:

Addendum B Waste Analysis Plan, dated December 31, 2017 ~~October 25, 2017~~

Addendum D Groundwater Monitoring, dated December 31, 2017 ~~October 25, 2017~~

Permit Condition III.3.O.2.h: corrected, "capacity of the containment pit (sump)" to read "capacity of the containment pit and sump".

WAC 173-303-830 Modification Class	Class 1	Class 1	Class 2	Class 3
Please mark the Modification Class:	X			

Enter relevant WAC 173-303-830, Appendix I Modification citation number: A.1

Enter wording of WAC 173-303-830, Appendix I Modification citation: Administrative and informational changes.

Modification Concurrence: ☑ Yes ☐ No (state reason)

Reason for Non-concurrence:

Reviewed by Ecology:

S. L. Dahl-Crumpler 1/23/18 Date

Hanford Facility RCRA Permit Change Notice

Unit:	Permit Part
Liquid Effluent Retention Facility & 200 Area Effluent Treatment Facility	**Part III, Operating Unit Group 3**

Description of Modification:

Part III, Operating Unit Group 3 Permit Conditions:

Permit Condition III.3.R.3.a: deleted Permit Condition this condition was completed

Permit Condition III.3.R.3.b: deleted Permit Condition this condition was completed

Permit Condition III.3.R.3.c: deleted Permit Condition including items 1-7, this condition was completed

Permit Condition III.3.R.3.c.1: deleted Pernnit Condition this condition was completed

Permit Condition III.3.R.3.c.2: deleted Permit Condition this condition was completed

Permit Condition III.3.R.3.c.2.a: deleted Permit Condition this condition was completed

WAC 173-303-830 Modification Class	Class 1	Class 1	Class 2	Class 3
Please mark the Modification Class:		X		

Enter relevant WAC 173-303-830, Appendix I Modification citation number: A.8

Enter wording of WAC 173-303-830, Appendix I Modification citation: Changes to remove permit conditions that are no longer applicable (i.e., because the standards upon which they are based are no longer applicable to the facility)

Modification Approved: ☑ Yes ☐ No (state reason)

Reason for denial:

Reviewed by Ecology:

S. L. Dahl-Crumpler 1/23/18 Date

Hanford Facility RCRA Permit Change Notice

Unit:	Permit Part
Liquid Effluent Retention Facility & 200 Area Effluent Treatment Facility	**Part III, Operating Unit Group 3**

Description of Modification:

Addendum B, Waste Analysis Plan:

Updated Modification History Table

Table B.6, corrected the practical quantitation limit (PQL) for n-nitrosodimethylamine from "10 ug/L" to "12 ug/L".

During the Class 2 modification, Ecology changed the practical quantitation limit (PCL) for n-nitrosodimethylamine from "12 ug/L" to "10 ug/L" for "consistency throughout the permit chapter" (value used in Addendum D, Groundwater Monitoring Plan based on values in 97-407, *Chemical Test Methods for Designating Dangerous Waste, Appendix V Groundwater Monitoring List*). However, the PQLs for the Waste Analysis Plan are based on the EPA delisting and Ecology water permits. Therefore, the PQL value for n-nitrosodimethylamine should not have been changed for consistency.

WAC 173-303-830 Modification Class	Class 1	Class 1	Class 2	Class 3
Please mark the Modification Class:	X			

Enter relevant WAC 173-303-830, Appendix I Modification citation number: **A.1**

Enter wording of WAC 173-303-830, Appendix I Modification citation: Administrative and informational changes.

Modification Concurrence: ☑ Yes ☐ No (state reason)

Reason for Non-concurrence:

Reviewed by Ecology:

S. L. Dahl-Crumpler — Date: 1/23/18

Hanford Facility RCRA Permit Change Notice

Unit:	Permit Part
Liquid Effluent Retention Facility & 200 Area Effluent Treatment Facility	**Part III, Operating Unit Group 3**

Description of Modification:

Addendum D, Groundwater Monitoring Plan

Updated Modification History Table

Formatting corrections:

- Section D.2.3.1.1, Basin 43 change to section numbering to Section D.2.3.2; and regenerate Table of Contents
- Increase spacing after Level 3 Heading section numbering and section title

Editorial corrections:

- Section D.2.4.2, change "(Figures D-11 and D)" to "(Figures D-11 and D-12)"
- Table D-6, Change "Section D.1Section D.3.1" to "Section D.1, Section D.3.1"
- Table D-6, delete duplicate text in Footnote as follows: "* Part II, Condition II.F of the ~~Hanford Facility~~ Hanford Facility RCRA Permit"

WAC 173-303-830 Modification Class	Class 1	Class 1	Class 2	Class 3
Please mark the Modification Class:	X			

Enter relevant WAC 173-303-830, Appendix I Modification citation number: A.1/A.2

Enter wording of WAC 173-303-830, Appendix I Modification citation: Administrative and informational changes/ Correction of typographical errors

Modification Concurrence: ☑ Yes ☐ No (state reason)

Reason for Non-concurrence:

Reviewed by Ecology:

S. L. Dahl-Crumpler — Date: 1/23/18

Remove and Replace the Following:

- Part III, Operating Unit Group 3, Permit Conditions
- Addendum B, Waste Analysis Plan
- Addendum D, Groundwater Monitoring Plan

LIQUID EFFLUENT RETENTION FACILITY & 200 AREA EFFLUENT TREATMENT FACILITY

CHANGE CONTROL LOG

Change Control Logs ensure that changes to this unit are performed in a methodical, controlled, coordinated, and transparent manner. Each unit addendum will have a "**Last Modification Date**" which represents the last date the portion of the unit has been modified. The "**Modification Number**" represents Ecology's method for tracking the different versions of the permit. This log will serve as an up to date record of modifications and version history of the unit.

Last modification to Liquid Effluent Retention Facility & 200 Area Effluent Treatment Facility
~~October 25~~December 31, 2017

Addenda	Last Modification Date	Modification Number
Unit-Specific Conditions	12/31/2017~~10/25/2017~~	8C.2017.Q4~~8C.2017.3F~~
A. Part A Form	10/25/2017	8C.2017.3F
B. Waste Analysis Plan	12/31/2017~~10/25/2017~~	8C.2017.Q4~~8C.2017.3F~~
C. Process Information	10/25/2017	8C.2017.3F
D. Groundwater Monitoring Plan	12/31/2017~~10/25/2017~~	8C.2017.Q4~~8C.2017.3F~~
E. Security Requirements	06/30/2011	
F. Preparedness and Prevention	08/25/2016	8C.2016.Q2
G. Personnel Training	06/30/2015	
H. Closure Plan	10/25/2017	8C.2017.3F
I. Inspection Requirements	10/25/2017	8C.2017.3F
J. Contingency Plan	08/25/2016	8C.2016.Q2

LIQUID EFFLUENT RETENTION FACILITY & 200 AREA EFFLUENT TREATMENT FACILITY PART III, OPERATING UNIT GROUP 3 PERMIT CONDITIONS

CHANGE CONTROL LOG

Change Control Logs ensure that changes to this unit are performed in a methodical, controlled, coordinated, and transparent manner. Each unit addendum will have its own change control log with a modification history table. The "**Modification Number**" represents Ecology's method for tracking the different versions of the permit. This log will serve as an up to date record of modifications and version history of the unit.

Modification History Table

Modification Date	Modification Number
12/31/2017	8C.2017.Q4
10/25/2017	8C.2017.3F
08/25/2016	8C.2016.Q2

PART III, OPERATING UNIT GROUP 3 PERMIT CONDITIONS LIQUID EFFLUENT RETENTION FACILITY & 200 AREA EFFLUENT TREATMENT FACILITY

UNIT DESCRIPTION

The Liquid Effluent Retention Facility (LERF) and 200 Area Effluent Treatment Facility (200 Area ETF) consists of an aqueous waste treatment system that provides treatment, storage integral to the treatment process, and storage of secondary wastes from the treatment process for a variety of aqueous mixed waste. The 200 Area ETF is located in the 200 East Area. Aqueous wastes managed by the 200 Area ETF include process condensate from the LERF and 200 Area ETF and other aqueous waste generated from onsite remediation and waste management activities.

The LERF consists of three lined surface impoundments, or basins. Aqueous waste from LERF is pumped to the 200 Area ETF for treatment in a series of process units, or systems, that remove or destroy essentially all of the dangerous waste constituents. The treated effluent is discharged to a State-Approved Land Disposal Site (SALDS) north of the 200 West Area, under the authority of a Washington State Waste Discharge Permit Number ST0004500 (Ecology 2014) and 200 Area ETF Delisting (40 Code of Federal Regulations (CFR) 261, Appendix IX, Table 2). Construction of the LERF began in 1990. Waste management operations began at LERF in April 1994. Construction of the 200 Area ETF began in 1992. Waste management operations began at 200 Area ETF in November of 1995.

This Chapter provides unit-specific Permit conditions applicable to the dangerous waste management units for LERF and 200 Area ETF.

LIST OF ADDENDA SPECIFIC TO OPERATING UNIT GROUP 3

Addendum A	Part A Form, dated October 25, 2017
Addendum B	Waste Analysis Plan, dated December 31, 2017~~October 25, 2017~~
Addendum C	Process Information, dated October 25, 2017
Addendum D	Groundwater Monitoring, dated December 31, 2017~~October 25, 2017~~
Addendum E	Security Requirements, dated June 30, 2011
Addendum F	Preparedness and Prevention, dated June 30, 2016
Addendum G	Personnel Training, dated June 30, 2015
Addendum H	Closure Plan, dated October 25, 2017
Addendum I	Inspection Requirements, dated October 25, 2017
Addendum J	Contingency Plan, dated June 30, 2016

DEFINITIONS

Flow equalization: Flow equalization is the process by which concentrations of constituents are homogenized through blending of the wastewater in the LERF basins, resulting in a more uniform loading of constituents prior to entering the appropriate treatment train.

State and federal delisting actions: The state delisting action pursuant to Washington Administrative Code (WAC) 173-303-910(3), August 8, 2005, and the federal delisting action appearing in 40 CFR 261, Appendix IX, Table 2 applicable to the United States, Department of Energy, Richland, Washington.

ACRONYMS

LERF and 200 Area ETF	200-Area Liquids Processing Facility

III.3.O.2.g The Permittees will comply with the requirements for air emissions from containers in Addendum C, Section C.6.3.2. [WAC 173-303-692]

III.3.O.2.h The accumulation of liquid waste stored in the 2025-ED Load-In Station will not be greater than the capacity of the containment pit and ~~(~~sump~~)~~. [WAC 173-303-630(7)(b), WAC 173-303-630(7)(c)]

III.3.O.2.i Containers with free liquids must be placed on spill pallets when placed in the Outdoor Container Storage Area. [WAC 173-303-630]

III.3.P TANK SYSTEMS

III.3.P.1 Tank System Requirements

III.3.P.1.a The Permittees will develop a schedule for conducting integrity assessments (IA). The schedule will meet the requirements of Addendum C, Section C.4.1.5, and consideration of the factors in WAC 173-303-640(2)(e) or WAC 173-303-640(3)(b) as applicable:

III.3.P.1.b The Permittees will maintain a copy of the schedule required by Permit Condition III.3.P.1.a, in the Hanford Facility Operating Record, LERF and 200 Area ETF file, and conduct periodic integrity assessments according to the schedule. The Permittees will document results of integrity assessments conducted according to the IA in the Hanford Facility Operating Record, LERF and 200 Area ETF file.

III.3.P.1.c If a tank system is found to be leaking, or is unfit for use, the Permittees must follow the requirements of WAC 173-303-640(7), incorporated by reference. [WAC 173-303-640(3)(b)]

III.3.P.2 Tank System Operating Requirements

III.3.P.2.a The Permittees will comply with the requirements of WAC 173-303-640(5)(a), incorporated by reference.

III.3.P.2.b The Permittees will comply with the requirements of Addendum C, Section C.4.4.2. [WAC 173-303-640(5)(b)]

III.3.P.2.c The Permittees will comply with the requirements of Addendum C, Section C.4.5. [WAC 173-303-640(5)(d)]

III.3.P.2.d The Permittees will comply with the requirements of WAC 173-303-640(7), incorporated by reference, in response to spills or leaks from tanks systems at 200 Area ETF. [WAC 173-303-640(5)(c)]

III.3.P.2.e The Permittees will ensure that the Waste Processing Strategy required by Permit Condition III.3.B.7.a, provides for the immediate treatment or blending of waste accepted for management at the 200 Area ETF such that the resulting waste or mixture is no longer reactive or ignitable when further managed in 200 Area ETF tank systems. [WAC 173-303-640(9)]

III.3.P.2.f The Permittees will comply with the requirements of WAC 173-303-640(10), incorporated by reference.

III.3.Q SURFACE IMPOUNDMENTS

III.3.Q.1 The Permittees will maintain the three LERF basins according to the requirements of WAC 173-303-650 (2)(f), incorporated by reference.

III.3.Q.2 The Permittees will operate the LERF basins according to the requirements of Addendum C, Section C.5.3, and Addendum I, Section I.1.2.3.1 to prevent over-topping. [WAC 173-303-650 (2)(c)]

III.3.Q.3 The Permittees will develop and maintain, and operate the LERF basins to ensure that any flow of waste into the impoundment can be immediately shut off in the event of overtopping or liner failure. [WAC 173-303-650 (2)(d)]

III.3.Q.4 The Permittees will comply with the requirements of WAC 173-303-650 (2)(g), incorporated by reference.

III.3.Q.5 The Permittees will comply with the requirements of WAC 173-303-650 (4)(b), incorporated by reference.

III.3.Q.6 The Permittees will comply with the requirements of WAC 173-303-650 (4)(c), incorporated by reference. The certification required by this Permit Condition must be provided to Ecology no later than seven calendar days after the date of the certification. A copy of the certification will be placed in the Hanford Facility Operating Record, LERF and 200 Area ETF file required by Permit Condition II.I.1. [WAC 173-303-650 (4)(c)]

III.3.Q.7 The Permittees will comply with the requirements of WAC 173-303-650(5)(b), incorporated by reference, in response to events in WAC 173-303-650(5)(a), incorporated by reference.

III.3.Q.8 The Permittees will comply with the requirements of WAC 173-303-650(5)(d) for any LERF basin that has been removed from service in accordance with Permit Condition III.3.Q.7 that the Permittees will restore to service. [WAC 173-303-650(5)(d)]

III.3.Q.9 The Permittees will close any LERF basin removed from service in accordance with the requirements of Permit Condition III.3.Q.7 or a basin that cannot be repaired or that the Permittees will not to return to service. [WAC 173-303-650(5)(e)]

III.3.Q.10 The Permittees will comply with the requirements of Addendum C, Section C.5.10 with respect to management of ignitable or reactive wastes in the LERF basins. [WAC 173-303-650(7)]

III.3.Q.11 The Permittees can place incompatible wastes and materials in the same LERF basin only if in compliance with the requirements of WAC 173-303-395(1)(b), (c). [WAC 173-303-650(8)]

III.3.Q.12 The Permittees will use the action leakage rate in Addendum C, Section C.5.8, for operation of LERF basins, and comply with the requirements of WAC 173-303-650(10)(b). [WAC 173-303-650(10)]

III.3.Q.13 The Permittees will comply with the requirements of WAC 173-303-650(11), incorporated by reference.

III.3.Q.14 The Permittees will comply with the requirements of 40 CFR 264, Subpart CC, incorporated by reference by WAC 173-303-692.

III.3.R **GROUNDWATER**

III.3.R.1 The Permittees will comply with the requirements of Addendum D, Groundwater Monitoring Plan. [WAC 173-303-645]

III.3.R.2 All wells constructed pursuant to this Permit will be constructed in compliance with Chapter 173-160 WAC incorporated by reference through WAC 173-303-645 (8)(c).

III.3.R.3 Maintain the Liquid Effluent Retention Facility Engineering Evaluation and Characterization report in the Hanford Facility Operating Record, LERF and 200 Area ETF, which satisfies the requirements in WAC 173-303-806 and -645.

~~**III.3.R.3.a** The Permittees will install an additional downgradient monitoring well E-26-15 as identified in Addendum D, Groundwater Monitoring Plan by December, 2016.~~

~~**III.3.R.3.b** Within 60 days of the well installation, the Permittees will submit a Class 2 Permit modification [WAC 173-303-830 Appendix I, C.1.a] to update Addendum D and include the additional monitoring well into the groundwater monitoring network.~~

~~**III.3.R.3.c** Concurrently with the permit modification request, the Permittees will submit a revised "Liquid Effluent Retention Facility Characterization Report" for the additional monitoring well that includes:~~

~~1) Well construction in accordance with WAC 173-303-645(8)(c)~~

~~2) Well screen placement in the upper aquifer in accordance with WAC 173-303-645(8)(a)~~

~~3) Hydrogeologic conditions, stratigraphy and hydraulic conductivity, derived from geologist observations of borehole archive samples, down hole gamma logging, and aquifer slug tests in accordance with WAC 173-303-645(8)(a)(i)(A)~~

~~4) Drilling and sampling details in accordance with WAC 173-303-645(8)(d)~~

~~5) Borehole corrections (e.g., precision surveys, gyroscopic corrections, and barometric response corrections) to ensure adequate hydraulic understanding considering the very small gradient in accordance with WAC 173-303-645(8)(f)~~

~~6) Geochemical comparison of the water quality with other existing wells to ensure anticipated representative conditions in accordance with WAC 173-303-645(8)(a)(ii)~~

~~7) Document surface location as required by WAC 173-303-645(6)~~

~~**III.3.R.3.c.1** Groundwater sample results from the new well (E-26-15) and the existing wells for all constituents in the Addendum D, Groundwater Monitoring Plan for the Liquid Effluent Retention Facility,~~

~~**III.3.R.3.c.2** Results of evaluating final well development data and drilling logs,~~

~~**III.3.R.3.c.2.a** A well use designation (e.g., upgradient or downgradient).~~

LIQUID EFFLUENT RETENTION FACILITY (LERF) & 200 AREA EFFLUENT TREATMENT FACILITY (ETF) ADDENDUM B WASTE ANALYSIS PLAN

CHANGE CONTROL LOG

Change Control Logs ensure that changes to this unit are performed in a methodical, controlled, coordinated, and transparent manner. Each unit addendum will have its own change control log with a modification history table. The "**Modification Number**" represents Ecology's method for tracking the different versions of the permit. This log will serve as an up to date record of modifications and version history of the unit.

Modification History Table PART III, OPERATING UNIT 3

Modification Date	Modification Number
12/31/2017	8C.2017.Q4
10/25/2017	8C.2017.3F
08/25/2015	8C.2016.Q2

Table B.6. Sample and Analysis Criteria for Influent Aqueous Waste and Treated Effluent

Parameter	Analytical Method[1]	Method PQL Sensitivity[2]	Accuracy/ Precision for Method[3] (percent)	Sample container[4]/ Preservative[4]/ Holding time[5]
Isophorone		2600	50-120 / 25	
Lindane (gamma-BHC)		1.9	50-120 / 25	
N-nitrosodimethylamine		12~~10~~	50-120 / 25	
Pyridine		15	50-120 / 25	
Tributyl phosphate		76	50-120 / 25	
2.4.6-Trichlorophenol		230	50-120 / 25	
POLYCHLORINATED BIPHENYLs (PCBs)				
Aroclor-1016	SW-846 8082	0.4	50-110 / 25	Sample container 4 x 1-liter amber glass Preservative 4°C Holding time 1 year for extraction; 1 year for analysis after extraction
Aroclor-1221		0.4	50-110 / 25	
Aroclor-1232		0.4	50-110 / 25	
Aroclor-1242		0.4	50-110 / 25	
Aroclor-1248		0.4	50-110 / 25	
Aroclor-1254		0.4	50-110 / 25	
Aroclor-1260		0.4	50-110 / 25	
TOTAL METALS				
Arsenic	EPA-600 200.8	11	70-130 / 20	Sample container 1 x 0.5-liter plastic/glass Preservative 1:1 HNO_3 to pH<2 Holding time 180 days; mercury 28 days
Beryllium		34	75 - 125 / 20	
Cadmium		5	70-130 / 20	
Chromium		20	70-130 / 20	
Copper		70	70-130 / 20	
Lead		10	70-130 / 20	

LIQUID EFFLUENT RETENTION FACILITY & 200 AREA EFFLUENT TREATMENT FACILITY ADDENDUM D

GROUNDWATER MONITIORING PLAN

CHANGE CONTROL LOG

Change Control Logs ensure that changes to this unit are performed in a methodical, controlled, coordinated, and transparent manner. Each unit addendum will have its own change control log with a modification history table. The "**Modification Number**" represents Ecology's method for tracking the different versions of the permit. This log will serve as an up to date record of modifications and version history of the unit.

Modification History Table

Modification Date	Modification Number
12/31/2017	8C.2017.Q4
10/25/2017	8C.2017.3F

ADDENDUM D
GROUNDWATER MONITORING PLANS

TABLE OF CONTENTS

D.1 Introduction 13
D.2 Background 17
D.2.1 Facility Description and Operational History 17
D.2.1.1 Physical Description 17
D.2.1.2 Operational History 20
D.2.2 Regulatory Basis 20
D.2.3 Waste Characteristics 22
D.2.3.1 Basin 42 22
D.2.3.2 Basin 43 30
D.2.3.3 Basin 44 35
D.2.4 Geology and Hydrogeology 37
D.2.4.1 Geology 37
D.2.4.2 Hydrogeology 51
D.2.4.3 Groundwater Flow Interpretation 60
D.2.5 Summary of Previous Groundwater Monitoring 70
D.2.6 Conceptual Site Model 82
D.2.7 Groundwater Detection Monitoring Requirements 83
D.3 Groundwater Monitoring Program 88
D.3.1 Constituents List and Sampling Frequency 88
D.3.1.1 Sampling if Contamination is Determined 91
D.3.1.2 Sample Schedule Impacts from Well Maintenance and Sampling Logistics 95
D.3.2 Point of Compliance 95
D.3.3 Monitoring Well Network 95
D.3.4 Differences between This Plan and Previous Plan 96
D.3.5 Sampling and Analysis Protocol 98
D.4 Data Evaluation and Reporting 99
D.4.1 Data Review 99
D.4.2 Statistical Evaluation 99
D.4.3 Interpretation 100
D.4.4 Reporting and Notification 100

D.2.3.2 Basin 43

The largest volume of waste waters received by Basin 43 was contaminated groundwater from the 200-UP-1/200-ZP-1 OU groundwater pumping systems. The 200-UP-1/200-ZP-1 OU waste stream had 20 times more volume sent to LERF than the next closest waste stream (ERDF leachate) between 1995 and 2012. The 200-UP-1/200-ZP-1 OU groundwater effluent waste characteristics are contained in Table D-2. Table D-2 also provides characteristics of ERDF leachate in Basin 43 for 2012, after receipt of the 200-UP-1/200-ZP-1 OU groundwater effluent waste was terminated. ERDF leachate characteristics from 2014 and 2015 were similar to the 2012 results and are, therefore, not shown. Overall, the waste characteristics in Basin 43 are most comparable to the waste streams from 200-UP-1/200-ZP-1 OU groundwater pumping systems because of its significant volume compared with the other waste streams.

To determine the detectability of LERF Basin 43 waste constituents in groundwater per WAC 173-303-645(9)(a)(iii), the 200 Area ETF waste profile records were compared to Hanford Site regional background groundwater concentrations. The makeup of Basin 43 is similar to regional background groundwater concentrations, except for chloride, nitrogen from nitrate, sulfate, hexavalent chromium, and carbon tetrachloride (see Table D-2).

The 200-UP-1/200-ZP-1 OU waste streams had a nitrogen in nitrate weighted average concentration of 101 mg/L compared to 10 mg/L for the regional background groundwater concentration. Some of the other waste streams (e.g., ERDF leachate and 200-BP-5 perched water) received at Basin 43 also exceeded regional background groundwater results for chloride, nitrogen, and sulfate, with concentrations as great as 224.0 mg/L, 219.7mg/L, and 597.0 mg/L, respectively (Table D-2). However, these constituents are indistinguishable from current groundwater conditions beneath LERF, mainly because of the concentration of these constituents in the groundwater at locations both crossgradient and upgradient to LERF, as discussed in Section D.2.3.1.

Dangerous waste metal constituents received at Basin 43 were evaluated to determine the detectability of LERF Basin 43 waste constituents in groundwater per WAC 173-303-645(9)(a)(iii). The 200 Area ETF waste profile records (the first four columns of Table D-2) when compared to Hanford Site regional background groundwater concentrations (Table D-2) were similar to regional background groundwater concentrations, except for chromium, cobalt, copper, hexavalent chromium, lead, nickel, thallium, vanadium and zinc. Although the 200 Area ETF waste profile records are above the regional groundwater background levels, the results would not be detectable at groundwater compliance points should there be a potential release into the upper aquifer because of the low waste stream concentrations and dispersive effect associated with infiltrating waste through the vadose zone and into the groundwater (see Section D.2.6).

Of the 49 volatile and semivolatile constituents analyzed at various frequencies from 2008 to 2011 for liquid wastes sent to Basin 43, only three (carbon tetrachloride, chloroform, and trichloroethene) were detectable. The most significant constituent was carbon tetrachloride with concentrations ranging between 190 and 800 µg/L. The other two constituents had concentrations less than 10 µg/L. Since carbon tetrachloride is not normally occurring in the groundwater, it should be an excellent indicator of a release (see Section D.2.6). TOC ranged between 0.3 and 2.45 mg/L for liquid waste in Basin 43. Concentrations do not appear to be significant enough to differentiate a groundwater quality impact should a release reach groundwater.

D.2.3.3 Basin 44

Evaluation of Basin 44 prior to 2013 showed that Basin 44 had received liquid waste dominated by ERDF leachate (7 million gal or 60 percent by volume). Other significant liquid waste streams include K Basin waste (1.9 million or 16 percent by volume), leachate from double-lined burial trenches, Mixed Waste Trenches 31 and 34 located in 218-W-5 Burial Ground (1.2 million gal or 10 percent by volume), and purge water from well development (1.1 million or 10 percent by volume). Purge water and Mixed Waste Trenches 31 and 34 waste streams are lower in all constituents compared with ERDF leachate. Therefore, the waste in Basin 44 is most similar to ERDF leachate because of volume and concentration. From 2012 to 2016, Basin 44 did not receive any significant change in waste stream concentrations. Additional characterization in 2015 and 2016 is similar to the earlier results, so no additional data are provided in Table D-4.

To determine the detectability of LERF Basin 44 waste constituents in groundwater per WAC 173-303-645(9)(a)(iii), the 200 Area ETF waste profile records were compared to Hanford Site regional background groundwater concentrations. The makeup of Basin 44 is similar to regional background groundwater concentrations, except for chloride, nitrate, and sulfate (see Table D-3).

Table D-3. Basin 44 Constituent Characterization Results for Past ERDF Leachate

Chemical Abstracts Service No.	Constituent	Average Concentration between February 2000 and September 2012	Units	Regional Groundwater Background Concentration*	Units
7429-90-5	Aluminum	31	µg/L	170	µg/L
7440-36-0	Antimony	1	µg/L	69.8	µg/L
7440-38-2	Arsenic	9	µg/L	11.8	µg/L
7440-39-3	Barium	97	µg/L	149	µg/L
7440-41-7	Beryllium	0	µg/L	3.38	µg/L
7440-43-9	Cadmium	<0.1	µg/L	1.29	µg/L
7440-70-2	Calcium	213,735	µg/L	58,389	µg/L
7440-47-3	Chromium	27	µg/L	3.17	µg/L
7440-50-8	Copper	20	µg/L	1.04	µg/L
7439-89-6	Iron	35	µg/L	1,104	µg/L
7439-92-1	Lead	2.8	µg/L	1.3	µg/L
7439-95-4	Magnesium	69,580	µg/L	31,051	µg/L
7439-97-6	Mercury	0.154	µg/L	0.006	µg/L
7440-02-0	Nickel	13	µg/L	1.98	µg/L
7440-09-7	Potassium	20,573	µg/L	11,089	µg/L
7782-49-2	Selenium	5	µg/L	20.7	µg/L
7440-21-3	Silicon	20,063	µg/L	43,904	µg/L
7440-22-4	Silver	<5.0	µg/L	5.98	µg/L
7440-23-5	Sodium	254,237	µg/L	32,919	µg/L
7440-31-5	Tin	1	µg/L	23.6	µg/L

D.2.4.2 Hydrogeology

The thickness of suprabasalt sediments beneath the LERF basins ranges from 60 to 69 m (198 to 225 ft). The vadose zone comprises unconsolidated to weakly cemented, muddy sandy, pebble-cobble gravels to gravelly sand, with occasional layers of sand and/or muddy sand. The gravel content is generally about 60 percent, consisting of 40 to 70 percent mafics. Significantly more cobbles were described in the north and south boreholes than to the east and west of the LERF basins. The only low permeability sediments beneath LERF are the Ringold sediments that are generally located beneath the water table and overlie the basalt surface where present. Some Ringold sediments are present to the east of the LERF Basins above the water table but showed no perched water conditions.

The uppermost aquifer directly beneath LERF is thin to moderate in thickness (e.g., ranging from possibly not present to greater than 8 m [26.25 ft]) and exists in the Hanford and EMB flow top (Figures D-11 and D-12). The basalt flow top fracturing, brecciation, and/or weathering provide localized zones of higher permeability. Where these conditions exist and are in hydraulic communication with overlying saturated sediments, the basalt flow top is part of the overlying unconfined aquifer system. Based on evaluations of drill cuttings, drilling rates, water production noted during drilling wells 299-E26-77 and 299-E26-79, and geophysical investigations, the EMB flow top functions as a component of the unconfined aquifer as depicted in Figure D-6. The unconfined aquifer extends to the east of LERF and just west of well 299-E26-11, where barometric analyses indicate semiconfined conditions. This determination is consistent with the rise in groundwater elevation when drilling advanced through the lower Ringold sediments, present at this well, causing the groundwater elevation to rise nearly 3.1 m (10 ft) in the temporary casing (WHC-MR-0235). The westward extent of the Ringold sediments is uncertain; however, it has been portrayed to pinch out west of well 299-E26-11 and east of wells 299-E26-14 and 299-E26-15 (Figures D-11 and D-12). Although well 299-E26-11 is still capable of yielding water samples, it continues to differ from the other LERF wells by the nearly meter higher water table elevation (Figure D-13) and the elevated tritium levels characteristic of groundwater influenced by past cooling water discharges at the 216-B-3 Pond (Figure D-14). Therefore, well 299-E26-11 is not included in the LERF groundwater monitoring network.

Well construction details are presented in Table D-4. To date, eight wells have been installed for detection monitoring at LERF. Three of the wells (299-E26-11, 299-E26-77, and 299-E26-79) were screened either entirely or primarily within the EMB flow top. The wells produce 22.7 L/min (6 gal/min) at a minimum, which is sufficient for groundwater sampling, and the flow top is sufficiently permeable for adequate hydraulic connection with the overlying sediments at wells 299-E26-77 and 299-E26-79. Well 299-E26-11 is not characteristic of the unconfined aquifer, is cross gradient of LERF, and is no longer used for monitoring at LERF. Two of the wells have gone dry (299-E26-9 and 299-E35-2), and the final three (299-E26-10, 299-E26-14, and 299-E26-15) are screened only or primarily in the suprabasalt sediments.

Hydraulic tests were conducted in 1990, 2003, 2008, 2011, and 2016 to derive hydraulic parameters for the various saturated formations beneath the LERF general vicinity. Slug tests were completed for each of the eight wells drilled near LERF providing data to derive hydraulic conductivity values (Table D-4). The 1990 slug tests were completed in wells 299-E26-9, 299-E26-10, 299-E26-11, and 299-E35-2. The following paragraphs summarize the results for each well, and WHC-SD-EN-EV-024 provides further detailed discussion. Also, in 2003 hydraulic tests were completed at wells 299-E26-10 and 299-E26-11 and consisted of slug tests at both wells and the following additional tests at well 299-E26-10: tracer test, tracer-pumpback test, and constant rate pumping test. A summary of the results for both wells is provided in this subsection, and PNNL-14804, *Results of Detailed Hydrologic Characterization Tests Fiscal Year 2003*, provides further discussion. Again in 2008, hydraulic slug tests were completed at wells 299-E26-77 and 299-E26-79 (Table D-4). A slug test at well 299-E26-11 also was included in 2008.

inconsistent mixed/fractured soil/bentonite layer, considering no horizontal migration. As discussed in Addendum C of the LERF and the 200 Area ETF permit, the hydraulic conductivity of the soil/bentonite layer was considered 10^{-7} cm/day. Nearly 68 years is required for the leachate to migrate through the Hanford gravels, assuming a vadose zone moisture content of 8.7 percent (WHC-SD-WM-TI-730). Because of an assumed 0.1 vertical dispersivity coefficient associated with the Hanford gravels, the leachate release entering the aquifer expands to an approximate area of 8 by 8 m (26 by 26 ft). Because of the continuous release source, approximately 0.08 cm/day enters into the aquifer. The flowing unconfined aquifer is influenced for approximately 74 days while moving through the zone of hypothetical leachate infiltration. Calculations indicate a 14% volume of contaminant loading when exiting the zone of leachate infiltration. As the plume migrates towards well 299-E26-79 it disperses. By the time the plume reaches well 299-E26-79, the original leachate concentrations are estimated to be approximately 4% of their original concentration in the basin. Thus, carbon tetrachloride may be as high as 21 µg/L.

Geochemically many of the dangerous waste constituents associated with LERF leachate are metals (cations). Hanford sediments have sufficient cation-exchange capacity to adsorb many of these cations. Considering the substantial thickness of vadose zone (60 m [197 ft]) and the cation-exchange capacity, dangerous waste metal constituents are not considered reliable indicators of the presence of dangerous constituents in the groundwater.

Finally, as shown in the hypothetical carbon tetrachloride transport example, dispersion is a significant decision component to determining the detectability/reliability of LERF waste constituents as indicators of groundwater contamination per WAC 173-303-645(9)(a)(iii). The constituents selected provide the best opportunity to determine whether dangerous waste/dangerous waste constituents may be impacting groundwater while maintaining a balance with the site false positive rate.

D.2.7 Groundwater Detection Monitoring Requirements

The groundwater monitoring program at LERF is conducted in accordance with the objectives identified in WAC 173-303-645, as required by the Hanford Facility RCRA Permit, Part II, Condition II.F. Detection monitoring is implemented in accordance with WAC 173-303-645(9), which requires the establishment and implementation of a groundwater monitoring program with reasonable confidence that a contaminant release to groundwater from a facility will be detected (WAC 173-303-645(8)(g)).

Table D-6 identifies where each detection monitoring program element of WAC 173-303-645(9) is addressed within this plan.

Table D-6. Pertinent WAC 173-303-645(9) Detection Monitoring Groundwater Requirements

Groundwater Monitoring Element	Pertinent Requirement*	Section Where Requirement is Addressed in Monitoring Plan
General Groundwater Monitoring Requirements: Groundwater Surface Elevation	According to WAC 173-303-645(8)(f): The groundwater monitoring program must include a determination of the groundwater surface elevation each time groundwater is sampled.	Section D.1, Section D.3.1 Table D-7 Section D.4.3 Appendix B, Section B2.2

Table D-6. Pertinent WAC 173-303-645(9) Detection Monitoring Groundwater Requirements

Groundwater Monitoring Element	Pertinent Requirement*	Section Where Requirement is Addressed in Monitoring Plan
	must be maintained in the facility operating record. The permit specifies when the data must be submitted for review.	Appendix A, Section A3.9 Appendix B, Chapter B3

* Part II, Condition II.F of the ~~Hanford Facility~~ Hanford Facility RCRA Permit specifies that a groundwater monitoring program under final status is subject to the requirements of WAC 173-303-645, "Dangerous Waste Regulations," "Releases from Regulated Units."

DOE = U. S. Department of Energy

LERF = Liquid Effluent Retention Facility

RCRA = Resource Conser*vation and Recovery Act of 1976*

WAC = *Washington Administrative Code*

Hanford Facility RCRA Permit Change Notice

Part III, Operating Unit Group 3

Liquid Effluent Retention Facility & 200 Area Effluent Treatment Facility

Index

Page	Permit Section
Page 2 of 6:	Part III, Operating Unit Group 3, Permit Conditions
Page 3 of 6:	Addendum C, Process Information
Page 4 of 6:	Addendum C, Process Information
Page 5 of 6:	Addendum I, Inspection Plan
Page 6 of 6:	Addendum F, Preparedness and Prevention

Submitted by WRPS Co-Operator:

12/12/17

D. Kent Smith — Date

Reviewed by DOE-ORP Program Office:

for

12/13/17

Glyn D. Trenchard — Date

Hanford Facility RCRA Permit Change Notice

Unit:	Permit Part
Liquid Effluent Retention Facility & 200 Area Effluent Treatment Facility	**Part III, Operating Unit Group 3**

Description of Modification:

Part III, Operating Unit Group 3 Permit Conditions:

Updated Change Control Log, Modification History Table, and the following List of Addenda Specific to Operating Unit Group 3:

Addendum C Process Information, dated December 31, 2017 ~~October 25, 2017~~

Addendum F Preparedness and Prevention, dated December 31, 2017 ~~June 30, 2016~~

Addendum I Inspection Requirements, dated December 31, 2017 ~~October 25, 2017~~

WAC 173-303-830 Modification Class	Class 1	Class 1	Class 2	Class 3
Please mark the Modification Class:	X			

Enter relevant WAC 173-303-830, Appendix I Modification citation number: A.1

Enter wording of WAC 173-303-830, Appendix I Modification citation: Administrative and informational changes.

Modification Concurrence: ☑ Yes ☐ No (state reason)

Reason for Non-concurrence:

Reviewed by Ecology:

S. L. Dahl-Crumpler

1/23/18
Date

Hanford Facility RCRA Permit Change Notice

Unit:	Permit Part
Liquid Effluent Retention Facility & 200 Area Effluent Treatment Facility	**Part III, Operating Unit Group 3**

Description of Modification:

Addendum C, Process Information:

- Updated Modification History Table
- For configuration control revised text in Addendum C, to reflect equivalent material cover replacement under Permit Condition II.R for Basin 43. The previous cover material for Basin 43 was a very low-density polyethylene (VLDPE), and the new cover material for Basin 43 is chlorosulfonated polyethylene (CSPE), which is a functionally equivalent material. (C.1, C.5.2.1, C.5.2.4,
- Section C.5.5, Piping Systems: corrected typo
- Section C.5.11, Cover Construction, Materials, and Operation: New Section C.5.11 for LERF covers. Moved and modified text pertaining to the LERF basin covers from Sections C.5.2.1 and C.5.2.4 to Section C.5.11. Section C.5.11 addresses both VLDPE and CSPE covers. Added reference to Section C.5.11 as appropriate, and regenerated Table of Contents to show new section.
- ~~Table C.3 Liquid Effluent Retention Facility Piping and Instrumentation: Clarified that the transfer piping discussed is the PC-5000 line and that it flows from the 242-A Evaporator. Narrative corrections matches reference to the piping system in the 242-A Evaporator permit.~~ No change made SLD
- Tables C.6 and C.7, editorial added missing hyphens in tank numbers

SLD

WAC 173-303-830 Modification Class	Class 1	Class 1	Class 2	Class 3
Please mark the Modification Class:	~~X~~	X		

Enter relevant WAC 173-303-830, Appendix I Modification citation number: Permit Condition II.R and A.3 / A.1

Enter wording of WAC 173-303-830, Appendix I Modification citation: Equipment replacement or upgrading with functionally equivalent components / Administrative and informational changes

Modification ~~Concurrence~~ Approval SLD: ☑ Yes ☐ No (state reason)

Reason for Non-concurrence: with changes

Reviewed by Ecology:

S. L. Dahl-Crumpler — Date: 1/23/18

Hanford Facility RCRA Permit Change Notice

Unit:	Permit Part
Liquid Effluent Retention Facility & 200 Area Effluent Treatment Facility	**Part III, Operating Unit Group 3**

Description of Modification:

Addendum C, Process Information:

- Section C.6.3: Deleted paragraph 2 pertaining to concentration of volatile organic compounds (VOCs) and addressed VOCs in Section C.6.3.3, Demonstrating Compliance with Subpart CC for Surface Impoundments.
- Section C.6.3.3, Demonstrating Compliance with Subpart CC for Surface Impoundments: Inserted text to clarify that the LERF Basins rely on the mixed waste exemption to implement Subpart CC emission standards (40 CFR 264.1080). Deleted text that is no longer applicable as the LERF basins rely on the mixed waste exemption and not the cover for meeting Subpart CC emission standards.

WAC 173-303-830 Modification Class	Class 1	Class 1	Class 2	Class 3
Please mark the Modification Class:		X		

Enter relevant WAC 173-303-830, Appendix I Modification citation number: A.8

Enter wording of WAC 173-303-830, Appendix I Modification citation: Changes to remove permit conditions that are no longer applicable (i.e., because the standards upon which they are based are no longer applicable to the facility)

Modification Approved: ☐ Yes ☒ No (state reason)

Reason for denial:
Ecology disagrees with the basis of this change.

Reviewed by Ecology:

S. L. Dahl-Crumpler — Date: 1/23/18

Hanford Facility RCRA Permit Change Notice

Unit:	Permit Part
Liquid Effluent Retention Facility & 200 Area Effluent Treatment Facility	**Part III, Operating Unit Group 3**

Description of Modification:

Addendum F, Preparedness and Prevention:

- Updated Modification History Table
- Deleted remaining metric units
- Section F.2.2, Runoff: Revised text to refer to LERF covers as "floating covers" and deleted material type "very low-density polyethylene". The material type is discussed in new Section C.5.11, Cover Construction, Materials, and Operation. This modification supports the equivalent material replacement for the Basin 43 cover.

WAC 173-303-830 Modification Class	Class 1	Class 1	Class 2	Class 3
Please mark the Modification Class:	X			

Enter relevant WAC 173-303-830, Appendix I Modification citation number: A.1/ Permit Condition II.R and A.3

Enter wording of WAC 173-303-830, Appendix I Modification citation: Administrative and informational changes/ Equipment replacement or upgrading with functionally equivalent components.

Modification Concurrence: [X] Yes [ ] No (state reason)

Reason for Non-concurrence:

Reviewed by Ecology:

S. L. Dahl-Crumpler — Date: 1/23/18

Hanford Facility RCRA Permit Change Notice

Unit:	Permit Part
Liquid Effluent Retention Facility & 200 Area Effluent Treatment Facility	**Part III, Operating Unit Group 3**

Description of Modification:

Addendum I, Inspection Plan:

- Updated Modification History Table
- Section I.1.2.3.1: Revised text to refer to LERF covers as "floating covers" and deleted material type "very low-density polyethylene". The material type is discussed in Section C.5.11, Cover Construction, Materials, and Operation. This modification supports the equivalent material replacement for the Basin 43 cover.
- Section I.1.2.3.3: Clarified alternate inspection location for transfer lines between LERF and 200 Area ETF is at surge tank "sump".
- Table I.1, last row corrected font sizing
- Table I.2, LAH-20B001: Corrected Item description from "Level transmitter" to "Level alarm"
- Table I.2, LAH-20B002: Corrected Item description from "Level transmitter" to "Level alarm"

WAC 173-303-830 Modification Class	Class 1	Class 1	Class 2	Class 3
Please mark the Modification Class:	X			

Enter relevant WAC 173-303-830, Appendix I Modification citation number: A.1/ A.3 and Permit Condition II.R

Enter wording of WAC 173-303-830, Appendix I Modification citation: Administrative and informational changes/ Equipment replacement or upgrading with functionally equivalent components.

Modification Concurrence: ☒ Yes ☐ No (state reason)

Reason for Non-concurrence:

Reviewed by Ecology:

S. L. Dahl-Crumpler — Date: 1/23/18

Remove and Replace the Following:

- Part III, Operating Unit Group 3, Permit Conditions
- Addendum C, Process Information
- Addendum F, Preparedness and Prevention
- Addendum I, Inspection Plan

LIQUID EFFLUENT RETENTION FACILITY & 200 AREA EFFLUENT TREATMENT FACILITY

CHANGE CONTROL LOG

Change Control Logs ensure that changes to this unit are performed in a methodical, controlled, coordinated, and transparent manner. Each unit addendum will have a **"Last Modification Date"** which represents the last date the portion of the unit has been modified. The **"Modification Number"** represents Ecology's method for tracking the different versions of the permit. This log will serve as an up to date record of modifications and version history of the unit.

Last modification to Liquid Effluent Retention Facility & 200 Area Effluent Treatment Facility **~~October 25~~December 31, 2017**

Addenda	Last Modification Date	Modification Number
Unit-Specific Conditions	12/31/2017~~10/25/2017~~	8C.2017.Q4~~8C.2017.3F~~
A. Part A Form	10/25/2017	8C.2017.3F
B. Waste Analysis Plan	10/25/2017	8C.2017.3F
C. Process Information	12/31/2017~~10/25/2017~~	8C.2017.Q4~~8C.2017.3F~~
D. Groundwater Monitoring Plan	10/25/2017	8C.2017.3F
E. Security Requirements	06/30/2011	
F. Preparedness and Prevention	12/31/2017~~08/25/2016~~	8C.2017.Q4~~8C.2016.Q2~~
G. Personnel Training	06/30/2015	
H. Closure Plan	10/25/2017	8C.2017.3F
I. Inspection Requirements	12/31/2017~~10/25/2017~~	8C.2017.Q4~~8C.2017.3F~~
J. Contingency Plan	08/25/2016	8C.2016.Q2

LIQUID EFFLUENT RETENTION FACILITY & 200 AREA EFFLUENT TREATMENT FACILITY PART III, OPERATING UNIT GROUP 3 PERMIT CONDITIONS

CHANGE CONTROL LOG

Change Control Logs ensure that changes to this unit are performed in a methodical, controlled, coordinated, and transparent manner. Each unit addendum will have its own change control log with a modification history table. The "**Modification Number**" represents Ecology's method for tracking the different versions of the permit. This log will serve as an up to date record of modifications and version history of the unit.

Modification History Table

Modification Date	Modification Number
12/31/2017	8C.2017.Q4
10/25/2017	8C.2017.3F
08/25/2016	8C.2016.Q2

PART III, OPERATING UNIT GROUP 3 PERMIT CONDITIONS LIQUID EFFLUENT RETENTION FACILITY & 200 AREA EFFLUENT TREATMENT FACILITY

UNIT DESCRIPTION

The Liquid Effluent Retention Facility (LERF) and 200 Area Effluent Treatment Facility (200 Area ETF) consists of an aqueous waste treatment system that provides treatment, storage integral to the treatment process, and storage of secondary wastes from the treatment process for a variety of aqueous mixed waste. The 200 Area ETF is located in the 200 East Area. Aqueous wastes managed by the 200 Area ETF include process condensate from the LERF and 200 Area ETF and other aqueous waste generated from onsite remediation and waste management activities.

The LERF consists of three lined surface impoundments, or basins. Aqueous waste from LERF is pumped to the 200 Area ETF for treatment in a series of process units, or systems, that remove or destroy essentially all of the dangerous waste constituents. The treated effluent is discharged to a State-Approved Land Disposal Site (SALDS) north of the 200 West Area, under the authority of a Washington State Waste Discharge Permit Number ST0004500 (Ecology 2014) and 200 Area ETF Delisting (40 Code of Federal Regulations (CFR) 261, Appendix IX, Table 2). Construction of the LERF began in 1990. Waste management operations began at LERF in April 1994. Construction of the 200 Area ETF began in 1992. Waste management operations began at 200 Area ETF in November of 1995.

This Chapter provides unit-specific Permit conditions applicable to the dangerous waste management units for LERF and 200 Area ETF.

LIST OF ADDENDA SPECIFIC TO OPERATING UNIT GROUP 3

Addendum A	Part A Form, dated October 25, 2017
Addendum B	Waste Analysis Plan, dated October 25, 2017
Addendum C	Process Information, dated December 31, 2017~~October 25, 2017~~
Addendum D	Groundwater Monitoring, dated October 25, 2017
Addendum E	Security Requirements, dated June 30, 2011
Addendum F	Preparedness and Prevention, dated December 31, 2017~~June 30, 2016~~
Addendum G	Personnel Training, dated June 30, 2015
Addendum H	Closure Plan, dated October 25, 2017
Addendum I	Inspection Requirements, dated December 31, 2017~~October 25, 2017~~
Addendum J	Contingency Plan, dated June 30, 2016

DEFINITIONS

Flow equalization: Flow equalization is the process by which concentrations of constituents are homogenized through blending of the wastewater in the LERF basins, resulting in a more uniform loading of constituents prior to entering the appropriate treatment train.

State and federal delisting actions: The state delisting action pursuant to Washington Administrative Code (WAC) 173-303-910(3), August 8, 2005, and the federal delisting action appearing in 40 CFR 261, Appendix IX, Table 2 applicable to the United States, Department of Energy, Richland, Washington.

ACRONYMS

LERF and 200 Area ETF	200-Area Liquids Processing Facility

III.3.O.2.g The Permittees will comply with the requirements for air emissions from containers in Addendum C, Section C.6.3.2. [WAC 173-303-692]

III.3.O.2.h The accumulation of liquid waste stored in the 2025-ED Load-In Station will not be greater than the capacity of the containment pit and ~~(sump)~~. [WAC 173-303-630(7)(b), WAC 173-303-630(7)(c)]

III.3.O.2.i Containers with free liquids must be placed on spill pallets when placed in the Outdoor Container Storage Area. [WAC 173-303-630]

III.3.P TANK SYSTEMS

III.3.P.1 Tank System Requirements

III.3.P.1.a The Permittees will develop a schedule for conducting integrity assessments (IA). The schedule will meet the requirements of Addendum C, Section C.4.1.5, and consideration of the factors in WAC 173-303-640(2)(e) or WAC 173-303-640(3)(b) as applicable:

III.3.P.1.b The Permittees will maintain a copy of the schedule required by Permit Condition III.3.P.1.a, in the Hanford Facility Operating Record, LERF and 200 Area ETF file, and conduct periodic integrity assessments according to the schedule. The Permittees will document results of integrity assessments conducted according to the IA in the Hanford Facility Operating Record, LERF and 200 Area ETF file.

III.3.P.1.c If a tank system is found to be leaking, or is unfit for use, the Permittees must follow the requirements of WAC 173-303-640(7), incorporated by reference. [WAC 173-303-640(3)(b)]

III.3.P.2 Tank System Operating Requirements

III.3.P.2.a The Permittees will comply with the requirements of WAC 173-303-640(5)(a), incorporated by reference.

III.3.P.2.b The Permittees will comply with the requirements of Addendum C, Section C.4.4.2. [WAC 173-303-640(5)(b)]

III.3.P.2.c The Permittees will comply with the requirements of Addendum C, Section C.4.5. [WAC 173-303-640(5)(d)]

III.3.P.2.d The Permittees will comply with the requirements of WAC 173-303-640(7), incorporated by reference, in response to spills or leaks from tanks systems at 200 Area ETF. [WAC 173-303-640(5)(c)]

III.3.P.2.e The Permittees will ensure that the Waste Processing Strategy required by Permit Condition III.3.B.7.a, provides for the immediate treatment or blending of waste accepted for management at the 200 Area ETF such that the resulting waste or mixture is no longer reactive or ignitable when further managed in 200 Area ETF tank systems. [WAC 173-303-640(9)]

III.3.P.2.f The Permittees will comply with the requirements of WAC 173-303-640(10), incorporated by reference.

III.3.Q SURFACE IMPOUNDMENTS

III.3.Q.1 The Permittees will maintain the three LERF basins according to the requirements of WAC 173-303-650 (2)(f), incorporated by reference.

III.3.Q.2 The Permittees will operate the LERF basins according to the requirements of Addendum C, Section C.5.3, and Addendum I, Section I.1.2.3.1 to prevent over-topping. [WAC 173-303-650 (2)(c)]

LIQUID EFFLUENT RETENTION FACILITY (LERF) & 200 AREA EFFLUENT TREATMENT FACILITY (ETF) ADDENDUM C PROCESS INFORMATION

CHANGE CONTROL LOG

Change Control Logs ensure that changes to this unit are performed in a methodical, controlled, coordinated, and transparent manner. Each unit addendum will have its own change control log with a modification history table. The "**Modification Number**" represents Ecology's method for tracking the different versions of the permit. This log will serve as an up to date record of modifications and version history of the unit.

Modification History Table

Modification Date	Modification Number
12/31/2017	8C.2017.Q4
10/25/2017	8C.2017.3F
08/25/2016	8C.2016.Q2

ADDENDUM C
PROCESS INFORMATION

TABLE OF CONTENTS

C. PROCESS INFORMATION 6

C.1 Liquid Effluent Retention Facility Process Description 7

C.2 200 Area Effluent Treatment Facility Process Description 8
C.2.1 2025-ED Load-In Station 9
C.2.2 200 Area Effluent Treatment Facility Operating Configuration 9
C.2.3 Primary Treatment Train 9
C.2.4 Secondary Treatment Train 12
C.2.5 Other 200 Area Effluent Treatment Facility Systems 13

C.3 Containers 16
C.3.1 2025-E Process Area 16
C.3.2 2025-E Truck Bay 17
C.3.3 2025-E Container Storage Area 17
C.3.4 Outside Container Storage Area 17
C.3.5 2025-ED Load-In Station 17
C.3.6 Description of Containers 17
C.3.7 Container Management Practices 18
C.3.8 Container Labeling 18
C.3.9 Secondary Container Containment Requirements/Design 19

C.4 Tank Systems 21
C.4.1 Design Requirements 21
C.4.2 Additional Requirements for New Tanks 26
C.4.3 Secondary Containment and Release Detection for Tank Systems 27
C.4.4 Tank Management Practices 32
C.4.5 Labels or Signs 34
C.4.6 Air Emissions 34
C.4.7 Management of Ignitable or Reactive Wastes in Tanks Systems 35
C.4.8 Management of Incompatible Wastes in Tanks Systems 35

C.5 LERF Surface Impoundment Operations 35
C.5.1 List of Dangerous Waste 35
C.5.2 Construction, Operation, and Maintenance of Liner System 35
C.5.3 Prevention of Overtopping 43
C.5.4 Structural Integrity of Dikes 43
C.5.5 Piping Systems 45
C.5.6 Double Liner and Leak Detection, Collection, and Removal System 46
C.5.7 Construction Quality Assurance 47
C.5.8 Proposed Action Leakage Rate and Response Action Plan 48
C.5.9 Dike Structural Integrity Engineering Certification 48
C.5.10 Management of Ignitable, Reactive, or Incompatible Wastes 48
C.5.11 Cover Construction, Materials, and Operation 48

C.6 Air Emissions Control 48
C.6.1 Applicability of Subpart AA Standards 49
C.6.2 Process Vents - Demonstrating Compliance 49
C.6.3 Applicability of Subpart CC Standards 50

from the 200 Area ETF also can be transferred back to the LERF through one of these transfer pipelines. These pipelines are equipped with leak detection located in the annulus between the inner and outer pipes. In the event that these leak detectors are not in service, the pipelines are visually inspected during transfers for leakage by opening the secondary containment drain lines located at the 200 Area ETF end of the transfer pipelines.

Each basin is equipped with six available sample risers constructed of 6-inch perforated pipe. A seventh sample riser in each basin is dedicated to influent aqueous waste receipt piping (except for aqueous waste received from the 242-A Evaporator), and an eighth riser in each basin contains liquid level instrumentation.

Each riser extends along the sides of each basin from the top to the bottom of the basin and allows samples to be collected from any depth. Personnel access to these sample ports is from the perimeter area of the basins. A catch basin is provided at the northwest corner of each LERF basin for aboveground piping and manifolds for transfer pumps. Aqueous waste from the 242-A Evaporator is transferred through piping which ties into piping at the catch basins. Under routine operations, a submersible pump is used to transfer aqueous waste from a LERF basin to the 200 Area ETF for processing or for basin-to-basin transfers. This pump is connected to a fixed manifold on one of four available risers.

Each basin consists of a multilayer liner system supported by a concrete anchor wall around the basin perimeter and a soil-bentonite clay underlayment. The multilayer liner system consists of a primary liner in contact with the aqueous waste, a layer of bentonite carpet, a geonet, a geotextile, a gravel layer, and a secondary liner that rests on the bentonite underlayment. Any aqueous waste leakage through the primary liner flows through the geonet and gravel to a leachate collection system. The leachate flows to a sump at the northwest corner of each basin, where the leachate is pumped up the side slope and back into the basin above the primary liner. Each liner is constructed of high-density polyethylene. A floating cover ~~made of very low density polyethylene~~ is stretched over each basin above the primary liner. These covers serve to keep unwanted material from entering the basins, and to minimize evaporation of the liquid contents.

C.2 200 Area Effluent Treatment Facility Process Description

The 200 Area ETF is designed as a flexible treatment system that provides treatment for contaminants anticipated in process condensate and other onsite aqueous waste. The design influent flow rate into the 200 Area ETF is approximately 150 gallons per minute, with planned outages for activities such as maintenance on the 200 Area ETF systems. Maintenance outages typically are scheduled between treating a batch of aqueous waste, referred to as treatment campaigns. The effluent flow (or volume) is equivalent to the influent flow (or volume).

The 200 Area ETF generally receives aqueous waste directly from the LERF. However, aqueous waste also can be transferred from tanker trucks at the Load-In Station (2025-ED) and from containers (e.g., carboys, drums) directly to building 2025-E. Aqueous waste is treated and stored in 2025-E Process Areas in a series of tank systems, and process units. Within building 2025-E, waste also is managed in containers through treatment and/or storage. Figures C.2 and C.3 provide the relative locations of the process and container storage areas within the 200 Area ETF.

The process units are grouped in either the primary or the secondary treatment train. The primary treatment train provides for the removal or destruction of contaminants. Typically, the secondary treatment train processes the waste by-products from the primary treatment train by reducing the volume of waste. In the secondary treatment train, contaminants are concentrated and dried to a powder. The liquid fraction is routed to the primary treatment train. Figure C.2 provides an overview of the layout of the 2025-E building and the Load-In Station). Figure C.3 presents the Building 2025-E Ground Floor Plan, which includes the relative locations of the individual process units, and associated tanks.

The dry powder waste and maintenance and operations waste are containerized and stored or treated in the container storage areas, or accumulated in containers. Container secondary containment requirements

Spent resins are transferred into a disposal container should regeneration of the IX resins become inefficient Free water is removed from the container and returned to the surge tank. Dewatered resins are transferred to a final storage/disposal point.

Verification. The three verification tanks (Figure C.10) are used to hold the treated effluent while a determination is made that the effluent meets discharge limits. The effluent can be returned to the primary treatment train for additional treatment, or to the LERF, should a treated effluent not meet Waste Discharge Permit ST0004500 requirements.

The three verification tanks alternate between three operating modes: receiving treated effluent, holding treated effluent during laboratory analysis and verification, or discharging verified effluent. Treated effluent may also be returned to the 200 Area ETF to provide 'clean' service water for operational and maintenance functions, e.g., for boiler water and for backwashing the filters. This recycling keeps the quantity of fresh water used to a minimum.

C.2.4 Secondary Treatment Train

The secondary treatment system typically receives and processes the following by-products generated from the primary treatment train: concentrate from the first RO stage, filter backwash, regeneration waste from the ion exchange system, and spillage or overflow received into the process sumps. Depending on the operating configuration, however, some aqueous waste could be processed in the secondary treatment train before the primary treatment train (refer to Figures C.4 and C.5 for example operating configurations).

The secondary treatment train provides the following processes:

- Secondary waste receiving - tank receiving and chemical addition.
- Evaporation - concentrates secondary waste streams.
- Concentrate staging - concentrate receipt, pH adjustment, and chemical addition.
- Thin film drying - dewatering of secondary waste streams.
- Container handling - packaging of dewatered secondary waste.

Secondary Waste Receiving. Waste to be processed in the secondary treatment train is received into two secondary waste receiving tanks, where the pH can be adjusted with sulfuric acid or sodium hydroxide for optimum evaporator performance. Chemicals, such as reducing agents, may be added to waste in the secondary waste receiving tanks to reduce the toxicity or mobility of constituents in the powder.

Evaporation. The Evaporator Vapor Body Vessel (601-EV-1) is fed alternately by the two secondary waste receiving tanks. One tank serves as a waste receiver while the other tank is operated as the feed tank. The Evaporator Vapor Body Vessel (also referred to as the vapor body) is the principal component of the evaporation process Figure C.11).

Feed from the secondary waste receiving tanks is pumped through a heater to the recirculation loop of the 200 Area ETF Evaporator. In this loop, concentrated waste is recirculated from the Evaporator Vapor Body Vessel, to a heater, and back into the evaporator where vaporization occurs. As water leaves the evaporator system in the vapor phase, the concentration of the waste in the evaporator increases. When the concentration of the waste reaches the appropriate density, a portion of the concentrate is pumped to one of the concentrate tanks.

The vapor that is released from the Evaporator Vapor Body Vessel is routed to the entrainment separator, where water droplets and/or particulates are separated from the vapor. The 'cleaned' vapor is routed to the vapor compressor and converted to steam.

The steam from the vapor compressor is sent to the heater (reboiler) and used to heat the recirculating concentrate in the Evaporator Vapor Body Vessel. From the heater, the steam is condensed and fed to the distillate flash tank, where the saturated condensate received from the heater drops to atmospheric pressure and cools to the normal boiling point through partial flashing (rapid vaporization caused by a

a 40 x 18.7-foot pad with a 6-inch curb to contain liquid spills. The central section of the west bay truck pad extends about 6 feet outside the building to the adjacent Load-In Station tank containment pit. The west truck pad is coated and the east truck pad floor depression is coated. Both truck pads are inside the metal Load-In Station building and are sloped to drain to the Load-In Station tank secondary containment pit through a drainpipe located in the east wall of the containment basin. The Load-In Station containment pit is described in Section C.4.3.1.2. The volume of the pit is 19,300 gallons, which is greater than the volume of the largest tanker expected to be received. A leak detector in the 2025-ED Load-In Station containment pit sump alarms locally and in the 200 Area ETF Control Room. Alarms are monitored continuously in the 200 Area ETF Control Room during Load-In Station transfers and at least daily at times when waste is not being received at the 2025-E Load-In Station. Alternatively, leaks can be visually detected.

C.3.9.1 Structural Integrity of Base

Engineering calculations were performed showing the floor of the 2025-E Container Storage Area is capable of supporting the weight of containers. These calculations were reviewed and certified by a professional engineer (*Final RCRA Information Needs Report,* Mausshardt 1995). The concrete was inspected for damage during construction. Cracks were identified and repaired to the satisfaction of the professional engineer. Documentation of these certifications is included in the engineering assessment (*Final RCRA Information Needs Report,* Mausshardt 1995).

C.3.9.2 Control of Run-on

Building 2025-E serves to prevent run-on of precipitation for the container management areas that are located within building 2025-E. Building 2025-ED serves to prevent run-on of precipitation for the 2025-ED Load-In Station container storage area.

The Outside Container Storage Area run-on will be controlled by drainage sloping away from the storage area. Waste containers stored without secondary containment in the Outside Container Storage Area will be elevated to prevent contact with any run-on or accumulated liquids.

C.3.9.3 Removal of Liquids from Containment Systems

The 2025-E Container Storage Area is equipped with drains that route solution to a trench in the 2025-E Process Area, which drains to Sump Tank 1. The sump tanks are equipped with alarms that notify operating personnel that a leak is occurring. The sump tanks also are equipped with pumps to transfer waste to the surge tank or the secondary treatment train. Additional information on removal of liquids is provided in Section C.2, and Section C.4.3.1.2.

Spilled or leaked material (i.e., waste) from Sump Tank 1 or Sump Tank 2 is fed to either the surge tank and processed in the primary treatment train or to the secondary waste receiving tanks and processed in the secondary treatment train.

2025-E Process Area. The floor of the 2025-E Process Area is sloped to drain liquids to two trenches that drain to Sump Tanks 1 and 2. The sump tanks are equipped with level monitoring and detection alarms that notify operating personnel that a leak is occurring. The sump tanks also are equipped with pumps to transfer waste to the surge tank or the secondary treatment train.

2025-E Truck Bay. Liquids from the 2025-E Truck Bay are routed to a trench that drains to Sump Tank 1. The sump tank is equipped with level monitoring and a detection alarm that notifies operating personnel that a leak is occurring. The sump tank also is equipped with a pump to transfer waste to the surge tank or the secondary treatment train.

2025-E Container Storage Area. The 2025-E Container Storage Area is equipped with drains that route solution to a trench in the 2025-E Process Area, which drains to Sump Tank 1. The sump tank is equipped with level monitoring and a detection alarm that notifies operating personnel that a leak is

samples of various ratios. Based on these results, the conservative minimum Mohr-Coulomb shear strength value of 30 degrees was estimated for a soil/bentonite admixture containing 12 percent bentonite.

The high degree of compaction of the soil/bentonite layer [92 percent per ASTM D1557 (*Test Method for Laboratory Compaction Characteristics of Soil Using Modified Effort (56,000 feet-pound/feet)*, ASTM 1991)] was expected to maximize the bonding forces between the clay particles, thereby minimizing moisture transport through the liner. With respect to particle movement ('piping'), estimated fluid velocities in this low-permeability material are too low to move the soil particles. Therefore, piping is not considered a problem.

For the soil/bentonite layer, three test fills were constructed to demonstrate that materials, methods, and procedures used would produce a soil/bentonite liner that meets the EPA permeability requirement of less than 3.9E-08 inches per second. All test fills met the EPA requirements.
A thorough discussion of construction procedures, testing, and results is provided in *Report of Permeability Testing, Soil-bentonite Test Fill, KEH W-105, Project No 86-19005* (Chen-Northern 1991).

The aqueous waste stored in the LERF is typically a dilute mixture of organic and inorganic constituents. Though isolated instances of soil liner incompatibility have been documented in the literature (*Flexible Membrane Liners for Solid and Hazardous Waste Landfills - A State of the Art Review,* Forseth and Kmet 1983), these instances have occurred with concentrated solutions that were incompatible with the geomembrane liners in which the solutions were contained. Considering the dilute nature of the aqueous waste that is and will be stored in LERF and the moderate pH, and test results demonstrating the compatibility of the high-density polyethylene liners with the aqueous waste (9090 Test Results [WHC-SD-W105-TD-001, 1991]), gross failure of the soil/bentonite layer is not probable.

~~Each basin also is equipped with a floating very low density polyethylene cover. The cover is anchored and tensioned at the concrete wall at the top of the dikes, using a patented mechanical tensioning system. Figure C.15 depicts the tension mechanism and the anchor wall at the perimeter of each basin. Additional information on the cover system is provided in Section C.5.2.5.~~

C.5.2.1.1 Material Specifications

Material specifications for the liner system and leachate collection system, including liners, drainage gravel, and drainage net are discussed in the following sections. Material specifications are documented in the *Final Specifications 242-A Evaporator and PUREX Interim Retention Basins* (W-105/83360/ER-0156, KEH 1990) and *Construction Specifications for 242-A Evaporator and PUREX Interim Retention Basins* (W-105, KEH 1990).

Geomembrane Liners. The high-density polyethylene resin for geomembranes for the LERF meets the material specifications listed in Table C.10. Key physical properties include thickness (60-mil [0.06-inch) and impermeability (hydrostatic resistance of over 450 pounds per square inch). Physical properties meet National Sanitation Foundation Standard 54 (*Flexible Membrane Liners,* NSF 1985). Testing to determine if the liner material is compatible with typical dilute waste solutions was performed and documented in *9090 Test Results* (WHC-SD-W105-TD-001, 1991).

Soil/Bentonite Liner. The soil/bentonite admixture consists of 11.5 to 14.5 percent bentonite mixed into well-graded silty sand with a maximum particle size of 0.187 inch (No. 4 sieve). Test fills were performed to confirm the soil/bentonite admixture applied at LERF has hydraulic conductivity less than 3.9E-08 inches per second, as required by WAC 173-303-650(2)(j) for new surface impoundments.

Bentonite Carpet Liner. The bentonite carpet liner consists of bentonite (90 percent sodium montmorillonite clay) in a primary backing of woven polypropylene with nylon filler fiber, and a cover fabric of open weave spunlace polyester. The montmorillonite is anticipated to retard migration of solution through the liner, exhibiting a favorable cation exchange for adsorption of some constituents (such as ammonium). Based on composition of the bentonite carpet and of the type of aqueous waste stored at LERF, no chemical attack, dissolution, or degradation of the bentonite carpet liner is anticipated.

Both high-density polyethylene liners, geotextile layers, and geonet are anchored permanently to a concrete wall at the top of the basin berm. During construction, liners were held in place with many sandbags on both the basin bottoms and side slopes to prevent wind from lifting and damaging the materials. Calculations were performed to determine the amount of fluid needed in a basin to prevent wind lift damage to the primary geomembrane. Approximately 6 to 8 inches of solution are kept in each basin to minimize the potential for uplifting the primary liner (*Calculations for Liquid Effluent Retention Facility Part B Permit Application,* HNF-SD-LEF-TI-005, 1997).

~~The entire lining system is covered by a very low-density polyethylene floating cover that is bolted to the concrete anchor wall. The floating cover prevents evaporation and intrusion from dust, precipitation, vegetation, animals, and birds. A patented tensioning system is employed to prevent wind from lifting the cover and automatically accommodate changes in liquid level in the basins. The cover tension mechanism consists of a cable running from the flexible geosynthetic cover over a pulley on the tension tower (located on the concrete anchor wall) to a dead man anchor. These anchors (blocks) simply hang from the cables on the exterior side of the tension towers. The anchor wall also provides for solid attachment of the liner layers and the cover, using a 1/4-inch batten and neoprene gasket to bolt the layers to the concrete wall, effectively sealing the basin from the intrusion of light, precipitation, and airborne dust (Figure C.15).~~

~~The floating cover, made of very low-density polyethylene with UV light inhibitors, is not anticipated to experience unacceptable degradation during the service life of the LERF. The very low-density polyethylene material contains carbon black for UV light protection, anti-oxidants to prevent heat degradation, and seaming enhancers to improve its ability to be welded. A typical manufacturer's limited warranty for weathering of very low-density polyethylene products is 20 years (Poly America, undated). This provides a margin of safety for the anticipated medium-term use of the LERF for aqueous waste storage.~~

The upper 11 to 15 feet of the sidewall liner also could experience stresses in response to temperature changes. Accommodation of thermal influences for the LERF geosynthetic layers is affected by inclusion of sufficient slack as the liners were installed. Calculations demonstrate that approximately 2.2 feet of slack is required in the long basin bottom dimension, 1.5 feet across the basin, and 1.1 feet from the bottom of the basin to the top of the basin wall (*Calculations for Liquid Effluent Retention Facility Part B Permit Application,* HNF-SD-LEF-TI-005, 1997).

~~Thermal stresses also are experienced by the floating cover. As with the geomembranes, sufficient slack was included in the design to accommodate thermal contraction and expansion.~~

The entire lining system is covered by a floating cover that is bolted to the concrete anchor wall (see Section C.5.11).

C.5.2.4.1 Liner Repairs During Operations

Should repair of a basin liner be required while the basin is in operation, a sufficient quantity of the basin contents will be transferred to the 200 Area ETF or another available basin to allow access for the repair activities. After the liner around the leaking or damaged section is cleaned, repairs to the geomembrane will be made as recommended by the liner vendor or others knowledgeable in liner repair; such as a professional engineer that has adequate knowledge and experience to make recommendations in liner repairs. The criteria for selecting a person or company to make liner repair recommendations is determined by the Permittees for the LERF basins. Selection criteria could include educational background, related experience, and professional qualifications.

C.5.2.4.2 Control of Air Emissions

The floating covers limit evaporation of aqueous waste and releases of volatile organic compounds into the atmosphere. To accommodate volumetric changes in the air between the fluid in the basin and the cover, and to avoid problems related to 'sealing' the basins too tightly, each basin is equipped with a

excessive hydrostatic pressure. A significant precipitation event (e.g., a 25-year, 24-hour storm) will not create a hydrostatic problem because the interior sidewalls of the basins are covered completely by the liners. The covers can accommodate this volume of precipitation without overtopping the dike (Section C.5.3), and the coarse nature of the dike and foundation materials on the exterior walls provides for rapid drainage of precipitation away from the basins.

Protection from Root Systems. Risk to structural integrity of the dikes because of penetrating root systems is minimal. Excavation and construction removed all vegetation on and around the impoundments, and native plants (such as sagebrush) grow very slowly. The large grain size of the cobbles and gravel used as dike construction material do not provide an advantageous germination medium for native plants. Should plants with extending roots become apparent on the dike walls, the plants will be controlled with appropriate herbicide application.

Protection from Burrowing Mammals. The cobble size materials that make up the dike construction material and the exposed nature of the dike sidewalls do not offer an advantageous habitat for burrowing mammals. Lack of vegetation on the LERF site discourages foraging. The risk to structural integrity of the dikes from burrowing mammals is therefore minimal. Periodic visual inspections of the dikes provide observations of any animals present. Should burrowing mammals be noted onsite, appropriate pest control methods such as trapping or application of rodenticides will be employed.

Protective Cover. Approximately 3 inches of crushed gravel serve as the cover of the exterior dike walls. This coarse material is inherently resistant to the effect of wind because of its large grain size. Total annual precipitation is low (6.3 inches) and a significant storm event (e.g., a 25-year, 24-hour storm) could result in about 2.1 inches of precipitation in a 24-hour period. The absorbent capacity of the soil exceeds this precipitation rate; therefore, the impact of wind and precipitation run-on to the exterior dike walls will be minimal.

C.5.5 Piping Systems

Aqueous waste from the 242-A Evaporator is transferred to the LERF using a pump located in the 242-A Evaporator and approximately 5,000 feet of pipe, consisting of a 3-inch carrier pipe within a 6-inch outer containment pipeline. Flow through the pump is controlled by a valve, at flow rates from 40 to 80 gallons per minute. The pipeline exits the 242-A Evaporator below grade and remains below grade at a minimum 14-feet depth for freeze protection, until the pipeline emerges at the LERF catch basin, at the corner of each basin. All piping at the catch basin that is less than 4 feet below grade is wrapped with electric heat tracing tape and insulated for protection from freezing.

The transfer line from the 242-A Evaporator is centrifugally cast, fiberglass-reinforced epoxy thermoset resin pressure pipe fabricated to meet the requirements of ASME D2997, *Standard Specification for ~~Centrifigally~~Centrifugally Cast Reinforced Thermosetting Resin Pipe* (ASME 1984). The 3-inch carrier piping is centered and supported within 6-inch containment piping. Pipe supports are fabricated of the same material as the pipe, and meet the strength requirements of ANSI B31.3, *Process Piping Guide* (ANSI 1987) for dead weight, thermal, and seismic loads. A catch basin is provided at the northwest corner of each basin where piping extends from the basin to allow for basin-to-basin and basin-to-200 Area ETF liquid transfers. Drawing H-2-88766, Sheets 1 through 4, provide schematic diagrams of the piping system at LERF. Drawing H-2-79604 provides details of the piping from the 242-A Evaporator to LERF.

C.5.5.1 Secondary Containment System for Piping

The 6-inch containment piping encases the 3-inch carrier pipe from the 242-A Evaporator to the LERF. All of the piping and fittings that are not directly over a catch basin or a basin liner are of this pipe-within-a-pipe construction. A catch basin is provided at the northwest corner of each basin where the inlet pipes, leachate risers, and transfer pipe risers emerge from the basin.
The catch basin consists of an 8-inch-thick concrete pad at the top of the dike. The perimeter of the catch basin has an 8-inch-high curb and the concrete is coated with a chemical resistant epoxy sealant. The

Insert to Line 33, page C-48:

This provides a margin of safety for the anticipated use of the LERF for aqueous waste storage.

Screen shot below shows placement of text for Section C.5.11

C.5.11-Cover-Construction,-Materials,-and-Operation

Each basin is equipped with a floating cover stretched over each basin above the primary liner. The floating covers prevent evaporation and intrusion from dust, precipitation, vegetation, animals, and birds. The three LERF Basins 42, 43, and 44 either have a very low-density polyethylene cover (VLDPE), or a chlorosulfonated polyethylene (CSPE) cover.

Both VLDPE and CSPE covers contain carbon black for UV light protection, and anti-oxidants to prevent heat degradation. Both cover materials were determined to be compatible with the LERF basin waste acceptance criteria. The VLDPE covers have seaming enhancers to improve the covers ability to be welded; while the CSPE cover uses modern seaming equipment that does not need seaming enhancers for the material to perform its required function. Typical manufacturer's limited warranty for weathering of VLDPE products is 20-years (Poly America, undated), whereas CSPE provides a 30-year limited manufacturer's warranty for weathering. This provides a margin of safety for the anticipated use of the LERF for aqueous waste storage.

The covers are anchored and tensioned at the concrete wall at the top of the dikes, using a patented mechanical tensioning system. Figure C.15 depicts the tension mechanism and the anchor wall at the perimeter of each basin. A patented tensioning system is employed to prevent wind from lifting the cover

C.5.8 Proposed Action Leakage Rate and Response Action Plan

An action leakage rate limit is established where action must be taken due to excessive leakage from the primary liner. The action leak rate is based on the maximum design flow rate the leak detection system can remove without the fluid head on the bottom liner exceeding 12 inches. The limiting factor in the leachate removal rate is the hydraulic conductivity of the drainage gravel. An action leakage rate (also called the rapid or large leak rate) of 2,100 gallons per acre per day was calculated for each basin (*Calculation of the Rapid or Large Leak Rate for LERF Basins in the 200 East Area,* WHC-SD-EN-TI-009, 1992).

When it is determined that the action leakage rate has been exceeded, the response action plan will follow the actions in WAC 173-303-650(11)(b) and (c), which includes notification of Ecology in writing within 7 days, assessing possible causes of the leak, and determining whether waste receipt should be curtailed and/or the basin emptied.

C.5.9 Dike Structural Integrity Engineering Certification

The structural integrity of the dikes was certified attesting to the structural integrity of the dikes, signed by a qualified, registered professional engineer.

C.5.10 Management of Ignitable, Reactive, or Incompatible Wastes

Although ignitable or reactive aqueous waste might be received in small quantities at LERF, such aqueous waste is mixed with dilute solutions in the basins, removing the ignitable or reactive characteristics. For compatibility requirements with the LERF liner, refer to Addendum B, Waste Analysis Plan.

C.5.11 Cover Construction, Materials, and Operation

Each basin is equipped with a floating cover stretched over each basin above the primary liner. The floating covers prevent evaporation and intrusion from dust, precipitation, vegetation, animals, and birds. The three LERF Basins 42, 43, and 44 either have a very low-density polyethylene cover (VLDPE), or a chlorosulfonated polyethylene (CSPE) cover.

Both VLDPE and CSPE covers contain carbon black for UV light protection, and anti-oxidants to prevent heat degradation. The VLDPE covers have seaming enhancers to improve the covers ability to be welded; while the CSPE cover uses modern seaming equipment that does not need seaming enhancers for the material to perform its required function. Typical manufacturer's limited warranty for weathering of VLDPE products is 20-years (Poly America, undated), whereas CSPE provides a 30-year limited manufacturer's warranty for weathering.

The covers are anchored and tensioned at the concrete wall at the top of the dikes, using a patented mechanical tensioning system. Figure C.15 depicts the tension mechanism and the anchor wall at the perimeter of each basin. A patented tensioning system is employed to prevent wind from lifting the cover and automatically accommodate changes in liquid level in the basins. The cover tension mechanism consists of a cable running from the flexible geosynthetic cover over a pulley on the tension tower (located on the concrete anchor wall) to a dead man anchor. These anchors (blocks) hang from the cables inside of the tension towers. The anchor wall also provides for solid attachment of the liner layers and the cover, using a 1/4-inch batten and neoprene gasket to bolt the layers to the concrete wall, effectively sealing the basin from the intrusion of light, precipitation, and airborne dust (Figure C.15). Thermal stresses also are experienced by the floating cover. Sufficient slack was included in the design to accommodate thermal contraction and expansion.

C.6 Air Emissions Control

This section addresses the 200 Area ETF requirements of Air Emission Standards for Process Vents, under 40 CFR 264, Subpart AA (WAC 173-303-690 incorporated by reference) and Subpart CC. The requirements of 40 CFR 264, Subpart BB (WAC 173-303-691) is not applicable because aqueous waste with 10 percent or greater organic concentration would not be acceptable for processing at the ETF.

* Line 27: Both cover materials were determined to be compatable with the LERF basin waste acceptance criteria.
* Line 33: See insert sheet.

which are destroyed in the UV/OX process. These constants are given in *200 Area Effluent Treatment Facility Delisting Petition* (DOE/RL-92-72, 1993).

- All organic compounds that are not destroyed in the UV/OX process are assumed to be emitted from the tanks and vessels into the vessel off gas system.
- No credit for removal of organic compounds in the vessel off gas system carbon absorber unit is taken. The activated carbon absorbers are used if required to reduce organic emissions.

The calculation to determine organic emissions consists of the following steps:

1. Determine the quantity of organics emitted from the tanks or vessels upstream of the UV/OX process, using transfer rate values.
2. Determine the concentration of organics in the waste after the UV/OX process using UV/OX reaction rates and residence times. If the 200 Area ETF is configured such that the UV/OX process is not used, a residence time of zero is used in the calculations (i.e., none of the organics are destroyed).
3. Assuming all the remaining organics are emitted, determine the rate, which the organics are emitted using the feed flow rate and the concentrations of organics after the UV/OX process.
4. The amount of organics emitted from the vessel off gas system is the sum of the amount calculated in steps 1 and 3.

The organic emission rates and quantity of organics emitted during processing are determined using these calculations and are included in the Hanford Facility Operating Record, LERF and 200 Area ETF file.

C.6.2.3 Reevaluating Compliance with Subpart AA Standards

Calculations to determine compliance with Subpart AA will be reviewed when any of the following conditions occur at the 200 Area ETF:

- Changes in the maximum feed rate to the 200 Area ETF (i.e., greater than the 150 gallons per minute flow rate).
- Changes in the configuration or operation of the 200 Area ETF that would modify the assumptions given in Section C.6.2.2 (e.g., taking credit for the carbon absorbers as a control device).
- Annual operating time exceeds 310 days.

C.6.3 Applicability of Subpart CC Standards

The air emission standards of 40 CFR 264, Subpart CC apply to tank, surface impoundment, and container storage units that manage wastes with average volatile organic concentrations equal to or exceeding 500 parts per million by weight, based on the hazardous waste composition at the point of origination (61 FR 59972). However, TSD units that are used solely for management of mixed waste are exempt. Mixed waste is managed at the LERF and 200 Area ETF and dangerous waste could be treated and stored at these TSD units.

Deletion Not Accepted SLD

~~TSD owner/operators are not required to determine the concentration of volatile organic compounds in a hazardous waste if the wastes are placed in waste management units that employ air emission controls that comply with the Subpart CC standards. Therefore, the approach to Subpart CC compliance at the LERF and 200 Area ETF is to demonstrate that the LERF and 200 Area ETF meet the Subpart CC control standards (40 CFR 264.1084 – 40 CFR 264.1086).~~

C.6.3.1 Demonstrating Compliance with Subpart CC for Tanks

Since the 200 Area ETF tanks already have process vents regulated under 40 CFR 264, Subpart AA (WAC 173-303-690), they are exempt from Subpart CC [40 CFR 264.1080(b)(8)].

C.6.3.2 Demonstrating Compliance with Subpart CC for Containers

Container Level 1 and Level 2 standards are met at the 200 Area ETF by managing all dangerous and/or mixed wastes in U.S. Department of Transportation containers [40 CFR 264.1086(f)]. Level 1 containers are those that store more than 3.5 cubic feet and less than or equal to 16 cubic feet. Level 2 containers are used to store more than 16 cubic feet of waste, which are in 'light material service'. Light material service is defined where a waste in the container has one or more organic constituents with a vapor pressure greater than 0.04 pounds per square inch at 68°F, and the total concentration of such constituents is greater than or equal to 20 percent by weight.

The monitoring requirements for Level 1 and Level 2 containers must include a visual inspection when the container is received at the 200 Area ETF, when waste is initially placed in the container, and at least once every 12 months when stored onsite for 1 year or more.

If compliant containers are not used at the 200 Area ETF, alternate container management practices are used that comply with the Level 1 standards. Specifically, the Level 1 standards allow for a "container equipped with a cover and closure devices that form a continuous barrier over the container openings such that when the cover and closure devices are secured in the closed position there are no visible holes, gaps, or other open spaces into the interior of the container. The cover may be a separate cover installed on the container...or may be an integral part of the container structural design… [40 CFR 264.1086(c)(1)(ii)]. An organic-vapor-suppressing barrier, such as foam, may also be used [40 CFR 264.1086(c)(1)(iii)]. Section C.3 provides detail on container management practices at the 200 Area ETF.

Container Level 3 standards apply when a container is used for the "treatment of a hazardous waste by a waste stabilization process" [40 CFR 264.1086(2)]. Because treatment in containers using the stabilization process is not provided at the 200 Area ETF, these standards do not apply.

C.6.3.3 Demonstrating Compliance with Subpart CC for Surface Impoundments

Additional text not accepted SD

The LERF Basins rely on the mixed waste exemption to implement Subpart CC emission standards (40 CFR 264.1080). Should the LERF Basins receive non-radioactive dangerous waste, the volatile organic concentration at the point of waste origination shall be less than 500 parts per million (ppm) by weight [40 CFR 264.1082(c)(1)]. These waste streams may be combined with mixed waste in the LERF basins without affecting the use of the mixed waste exemption because the non-radioactive dangerous waste streams would be below 500 ppm by weight volatile organic concentration. Non-dangerous radioactive waste and non-radioactive/ non-dangerous waste may also be combined with mixed waste in the LERF Basins.~~The Subpart CC emission standards are met at LERF using a floating membrane cover that is constructed of very-low-density polyethylene that forms a continuous barrier over the entire surface area [40 CFR 264.1085(c)]. This membrane has both organic permeability properties equivalent to a high-density polyethylene cover and chemical/physical properties that maintain the material integrity for the intended service life of the material. The additional requirements for the floating cover at the LERF have been met (Section C.5.2.4).~~ Deletion not accepted SD

C.7 Engineering Drawings

C.7.1 Liquid Effluent Retention Facility

Drawings of the containment systems at the LERF are summarized in Table C.2. Because the failure of these containment systems at LERF could lead to the release of dangerous waste into the environment, modifications that affect these containment systems will be submitted to the Washington State Department of Ecology, as a Class 1, 2, or 3 Permit modification, as required by WAC 173-303-830.

Table C.6. 200 Area Effluent Treatment Facility Tank Systems Information

Tank Description	Material of Construction [1]	Maximum Tank Capacity[2] (gallons)	Inner (feet)	Height (feet)	Shell Thickness[3] inch
Load-In Station tanks 2025ED-59A-TK-109 2025ED-59A-_TK-117	304 SS	9,100	12	15.4	1/4
Load-In Station tank 2025ED-59A-TK-1	FRP	6,900	10	11.5	3/16 1/4
Surge tank 2025E-60A-_TK-_1	304 SS	122,000	26	30	3/16
pH adjustment tank 2025E-60C-TK-1	304 SS	4,400	10	8	1/4
First RO feed tank 2025E-60F-TK-1	304 SS	5,400	10	10.5	1/4
Second RO feed tank 2025E-60F-TK-2	304 SS	2,300	10 X 5	5	3/16
Effluent pH adjustment tank 2025E-60C-TK-2	304 SS	3,800	8	12	1/4
Verification tanks 2025E-60H-TK-1A 2025E-60H-TK-1B 2025E-60H-TK-1C	Carbon steel with epoxy lining	799,000	60	37	5/16
Secondary waste receiving tanks 2025E-60I-TK-1A 2025E-60I-TK-1B	304 SS	19,500	14	18.7	1/4
Concentrate tanks 2025E-60J-TK-1A 2025E-60J-TK-1B	316L SS	6,600	10	11.5	1/4
Evaporator Vapor Body Vessel 2025E-60I-_EV-_1	Alloy 625	5,000	8	22	
Distillate flash tank 2025E-60I-TK-2	304 SS	250	2.5	7	9/32

Tank Description	Material of Construction [1]	Maximum Tank Capacity[2] (gallons)	Inner (feet)	Height (feet)	Shell Thickness[3] inch
Sump Tank 1 2025E-20B-TK-1	304 SS	1,800	5 X 5	11	3/16
Sump Tank 2 2025E-20B-TK-2	304 SS	1,800	5 X 5	11	3/16

[1]Type 304 SS, 304L, 316 SS and alloy 625 provide corrosion protection.

[2]The structural design capacity is based on the tank dimensions (reference CHPRC-01900)

[3]The nominal thickness of 200 Area ETF tanks is represented.

304 SS = stainless steel type 304 or 304L.

316L SS = stainless steel type 316L

FRP = Fiberglass-reinforced plastic.

Table C.7. 200 Area Effluent Treatment Facility Additional Tank System Information

Tank Description	Liner Materials	Pressure Controls	Foundation Materials	Structural Support	Seams	Connections
Load-In Station tanks 2025ED-59A-TK-109 2025ED-59A-TK-117	None	vent to atmosphere	concrete slab	SS skirt bolted to concrete	welded	flanged
Load-In Station tank 2025ED-59A-TK-1	None	vent to atmosphere	concrete slab	bolted to concrete	none	flanged
Surge tank 2025E-60A-TK-1	None	vacuum breaker valve/vent to VOG	reinforced concrete ring plus concrete slab	structural steel on concrete base	welded	flanged
pH adjustment tank 2025E-60C-TK-1	None	vent to VOG	concrete slab	carbon steel skirt	welded	flanged
First RO feed tank 2025E-60F-TK-1	None	vent to VOG	concrete slab	carbon steel skirt	welded	flanged
Second RO feed tank 2025E-60F-TK-2	None	vent to VOG	concrete slab	carbon steel frame	welded	flanged

Tank Description	Liner Materials	Pressure Controls	Foundation Materials	Structural Support	Seams	Connections
Effluent pH adjustment tank 2025E-60C-TK-2	None	vent to VOG	concrete slab	carbon steel skirt	welded	flanged
Verification tanks 2025E-60H-TK-1A 2025E-60H-TK-1B 2025E-60H-TK-1C	Epoxy	filtered vent to atmosphere	reinforced concrete ring plus concrete slab	structural steel on concrete base	welded	flanged
Secondary waste receiving tanks 2025E-60I-TK-1A 2025E-60I-TK-1B	None	vent to VOG	concrete slab	carbon steel skirt	welded	flanged
Concentrate tanks 2025E-60J-TK-1A 2025E-60J-TK-1B	None	vent to VOG	concrete slab	carbon steel skirt	welded	flanged
Evaporator Vapor Body Vessel (2025E 60I-EV-1)	None	pressure indicator/pressure relief valve vapor vent to DFT/VOG	concrete slab	carbon steel frame	welded	flanged
Distillate flash tank 2025E-60I-TK-2	None	Pressure relief valve/vent to vent gas cooler/VOG	concrete slab	carbon steel I-beam and cradle	welded	flanged
Sump Tank 1 2025E-20B-TK-1	None	vent to VOG	concrete containment	reinforced concrete containment basin	welded	flanged
Sump Tank 2 2025E-20B-TK-2	None	vent to VOG	concrete containment	reinforced concrete containment basin	welded	flanged

DFT = distillate flash tank

VOG = vessel off gas system

LIQUID EFFLUENT RETENTION FACILITY (LERF) & 200 AREA EFFLUENT TREATMENT FACILITY (ETF) ADDENDUM F PREPARDNESS AND PREVENTION

CHANGE CONTROL LOG

Change Control Logs ensure that changes to this unit are performed in a methodical, controlled, coordinated, and transparent manner. Each unit addendum will have its own change control log with a modification history table. The "**Modification Number**" represents Ecology's method for tracking the different versions of the permit. This log will serve as an up to date record of modifications and version history of the unit.

Modification History Table

Modification Date	Modification Number
12/31/2017	8C.2017.Q4
08/25/2016	8C.2016.Q2

F.1.1.4 Water for Fire Control

A water main is not provided to the LERF. The Hanford Fire Department is equipped with fire engines for fire control for fires requiring high water volume and pressure. The 200 Area ETF is serviced by two 12-inch raw water lines that are tied into the 200 East Area raw water distribution grids. These lines provide a looped configuration that supplies two independent sources of raw water for fire protection and raw water uses. Connections from the 200 Area ETF raw water system supply fire hydrants and the wet pipe sprinkler system. In the event that water pressure is lost, the Hanford Fire Department is equipped with fire engines to provide needed water.

F.1.2 Aisle Space Requirement

The operation of the LERF does not involve aisle space. Nevertheless, the LERF and the individual basins are easily accessible to emergency response personnel and vehicles. A ~~6.1-meter (~~20-feet~~)~~-wide service road runs along the base of the basin area on the east, south, and west sides within the operational security fence.

Aisle spacing at 200 Area ETF is sufficient to allow the movement of personnel and fire protection equipment in and around the containers. This storage arrangement also meets the requirements of the National Fire Protection Association (NFPA 1996) for the protection of personnel and the environment. A minimum ~~76-centimeter (~~30-inch~~)~~ aisle space is maintained between rows of containers as required by WAC 173-303-630(5)(c).

F.2 Preventive Procedures, Structures, and Equipment

The following sections describe preventive procedures, structures, and equipment.

F.2.1 Unloading Operations, Spill Prevention, and Control

Underground pipelines that transfer aqueous waste to and from the LERF are encased in a secondary pipe. If a leak is detected in a pipeline, flow in the pipeline will be stopped and the cause of the leak investigated and remediated.

If it is required to transfer aqueous waste from one LERF basin to another, existing transfer pumps are used as described in Addendum C.

The 2025-ED Load-in Station is monitored continuously during tank-filling operations and filling is stopped immediately if leaks occur. Care is taken to ensure that even minor leaks are cleaned up immediately and disposed of in accordance with approved management procedures. Any spill that is determined to be a dangerous waste will be managed according to the requirements of WAC 173-303.

F.2.2 Runoff

The LERF is constructed and operated to ensure that all aqueous waste is contained within the basins. The basins are designed and operated to prevent overtopping. Furthermore, the basins are provided with ~~very low-density polyethylene~~ floating covers to prevent the introduction of precipitation into the basins. The basins also are graded to ensure that all precipitation outside the basins is directed away from the surface impoundments.

The basins are constructed so that the top of the basin dikes are approximately ~~3 meters (~~9.8 feet~~)~~ above grade. The exterior side slopes of the basins have a 2.25 (horizontal) to 1 (vertical) slope. Run-on of precipitation to the basins from the surrounding area is not possible because the surrounding area slopes away from the LERF.

Dangerous waste and hazardous chemical handling areas at the 200 Area ETF are designed to contain spills, leaks, and wash water, thereby preventing run-off and subsequent releases. All dangerous and/or mixed waste loading and unloading areas are provided with secondary containment structures as described in Addendum C, Process Information.

filters, redundant trains are provided to mitigate equipment and system failure. Spare parts are maintained for essential production and safety equipment.

F.2.5 Personnel Exposure

At the LERF and 200 Area ETF, operating practices, structures, and equipment are used to prevent undue exposure of personnel to dangerous and/or mixed waste. All personnel handling waste use protective clothing and equipment. All operations are conducted so that exposure to dangerous and/or mixed waste and hazardous materials are maintained as low as reasonably achievable (ALARA).

Protective clothing and equipment are prescribed for personnel handling chemicals or dangerous waste. Before the start of any operation that could expose personnel to the risk of injury or illness, a review of the operation is performed to ensure that the nature of hazards that might be encountered is considered and appropriate protective gear is selected. Personnel are instructed to wear personal protective equipment in accordance with training, posting, and instructions.

A change trailer at LERF is located between Basins 42 and 43. In addition, the change trailer has an operations office for working with procedures. Exits within the change trailer are clearly marked. A storage building is located within the perimeter fence, northwest of the basins. The LERF storage building also is provided with separate storage areas for clean and contaminated equipment. A decontamination shower and decontamination building is located at the 272-AW Building, approximately ~~1.6 kilometers (~~1 mile~~)~~ from the LERF or at the 200 Area ETF.

The 200 Area ETF has eyewash stations and safety showers in convenient locations for use by personnel. The following structures and equipment were incorporated into the 200 Area ETF design to minimize personnel exposure.

- Offices, 200 Area ETF Control Room, clean- and soiled-clothes storage areas, change rooms, and the lunchroom are situated to minimize casual exposure of personnel.
- Building exit pathways are located to provide rapid egress in emergency evacuations.
- Emergency lighting devices are located strategically throughout the 200 Area ETF.
- Audio and/or visual alarms are provided for all room air samplers, area alarms, and liquid monitors. Visual readouts for these alarm systems are located in less contaminated areas to minimize exposure to personnel.
- Areas for decontaminating and maintaining equipment are provided in contaminated areas to limit the spread of contamination to uncontaminated areas such as the 200 Area ETF Control Room.
- Instrument interlock systems automatically return process operations to a safe condition if an unsafe condition should occur.
- The 200 Area ETF ventilation systems are designed to provide airflow from uncontaminated zones to progressively more contaminated zones.

Whenever possible, exposures to hazards are controlled by accepted engineering and/or administrative controls. Protective gear is used where effective engineering or administrative controls are not feasible.

F.3 Prevention of Reaction of Ignitable, Reactive, and Incompatible Waste

Typically, aqueous waste managed at the LERF or 200 Area ETF does not display the characteristics of reactivity or ignitability. Any aqueous waste streams exhibiting these characteristics are blended or mixed at LERF to a concentration where the waste no longer exhibits reactive or ignitable characteristics.

Incompatible aqueous waste is not expected to be stored or treated at the LERF or 200 Area ETF (Addendum B, Waste Analysis Plan). Therefore, the requirements of WAC 173-303-806(4)(a) are not applicable.

LIQUID EFFLUENT RETENTION FACILITY (LERF) & 200 AREA EFFLUENT TREATMENT FACILITY (ETF) ADDENDUM I INSPECTION REQUIREMENTS

CHANGE CONTROL LOG

Change Control Logs ensure that changes to this unit are performed in a methodical, controlled, coordinated, and transparent manner. Each unit addendum will have its own change control log with a modification history table. The "**Modification Number**" represents Ecology's method for tracking the different versions of the permit. This log will serve as an up to date record of modifications and version history of the unit.

Modification History Table PART III, OPERATING UNIT 3

Modification Date	Modification Number
12/31/2017	8C.2017.Q4
10/25/2017	8C.2017.3F
08/25/2016	8C.2016.Q2

During the visual inspection, particular attention is paid to valves and fittings for signs of cracking, deformation, and leakage.

I.1.2.3 Surface Impoundments and Condition Assessment

The following describes the surface impoundment inspections performed at LERF.

I.1.2.3.1 Overtopping Control

Under current operating conditions, 2 feet of freeboard is maintained at each LERF basin, which corresponds to an operating level of 22.2 feet, or operating capacity of 7.8 million gallons. Level indicators at each basin are monitored to confirm that this level is not exceeded.

Before an aqueous waste is transferred into a basin, administrative controls are implemented to ensure overtopping will not occur during the transfer. The volume of feed to be transferred is compared to the available volume in the receiving basin. The transfer is not initiated unless there is sufficient volume available in the receiving basin or a cut-off level is established. The transfer into the basin would be stopped when this cut-off level is reached.

The LERF basins also are provided with floating ~~very low-density polyethylene~~ covers that are designed and constructed to prevent overtopping by the introduction of precipitation and dust into the basins. Overtopping and flow control also are discussed in Addendum C.

I.1.2.3.2 Impoundment Contents

The LERF basins are inspected weekly to assess whether the contents are escaping from a basin. Level indicators are inspected weekly to check for unaccountable change in the level of the basins.

I.1.2.3.3 Leak Detection

The leachate detection, collection, and removal system is described in Addendum C. The leachate collection sump pump is activated when the liquid level in the leachate sump reaches a preset level. A flow meter/totalizer measures the amount of leachate removed. In addition, the timer on the leachate pump tracks the cumulative pump run time. The leak rate through the primary liner can be determined using one of two methods:

1) Measured as the leachate flow meter/totalizer readings (flow meters/totalizers are located on the outflow line from the collection sumps in the bottom of the LERF basins) or
2) Calculated using the pump operating time readings multiplied by the pump flow rate (the pump runs at a constant flow rate).

Calculations using either method are sufficient for compliance. If either the flow meter/ totalizer or pump operating time system is not functioning, this is identified as an abnormal condition (see Section I.1).

The LERF employs a double walled transfer piping between 242-A Evaporator and LERF and between LERF and 200 Area ETF. The WAC 173-303-650 regulations do not require a discussion of piping for surface impoundments. However, for the purposes of comprehensive coverage of the LERF, inspections and integrity assessments are performed on the piping system. Aqueous waste (e.g., process condensate) is transferred from the 242-A Evaporator to the LERF via a buried pipeline. Likewise, aqueous waste is transferred to the 200 Area ETF via buried pipelines. At the LERF dikes, aboveground piping serves to transfer waste from one basin to another.

The buried pipelines normally are continuously monitored during transfers by a leak detection system (Addendum C). Leak detection system alarms annunciate to the 200 Area ETF Control Room, which is monitored continuously during waste transfers and daily when no waste is transferring. As an alternative to continuous leak detection, the transfer lines can be inspected daily during transfers by opening the secondary containment drain lines at the LERF catch basins (for 242-A Evaporator transfers to LERF) and the surge tank sump (for LERF transfers to 200 Area ETF) to inspect for leakage. During the routine inspections at LERF, the aboveground piping system is inspected for signs of leakage and for general

Item	Inspection	Frequency
Safety Systems		
Eye wash stations	Check status; check for adequate pressure	Monthly
Safety showers	Check status; check for adequate pressure	Monthly
Emergency Systems		
Fire extinguishers	Check for adequate charge.	Monthly
Emergency lighting	Test operability.	Monthly
Processing Area		
Uninterruptible power supply	Check output voltage and visually inspect battery pack for corrosion and leakage. Check indicator lights for fault conditions.	Annually
LERF (Surface Impoundment)		
LERF basins and dikes	Check the overtopping controls and integrity of the basins and dikes	Weekly
LERF contents	Check basin level indicators for unaccountable changes in the level of the basins	Weekly
Leak Detections	Determine the leak rate per wetted surface area	Weekly
LERF basins and dikes	Check for run-on, run-off, cover integrity, erosion problems, and other signs of deterioration	Weekly & After significant precipitation events
Ignitable and Reactive		
Ignitable and reactive waste	Storage in compliance with Hanford Site fire protection standards and WAC 173-303-630(8)	Annually[2]
Container Storage Areas Other Than Secondary Treatment Train		
Container Storage	Container labels to ensure labels are not obscured, removed, or otherwise unreadable	Weekly
	Deterioration of containers, containment systems, or cracks in protective coating or foundations caused by corrosion, mishandling, or other factors	Weekly
	Leaks, spills, accumulated liquids, and open or improperly sealed containers	Daily

HEPA – High efficiency particulate air

[2]When waste management activities occur

I.1.5 Instrumentation Monitoring

Continuous monitoring applies to the electronic monitoring performed in the 200 Area ETF Control Room for this instrumentation during 200 Area ETF processing operations and/or 2025-E Load-In Station transfers. Data from alarms, leak detectors, and level transmitters are monitored daily in the 200 Area ETF Control Room when waste transfers are not occurring (see C.2.5.1). In cases where this instrumentation is out of service (e.g., calibration, power failures, or maintenance) daily visual inspections will be performed in accordance with WAC 173-303-640, using the alternate methods discussed in Addendum C, Section C.1 for leak detection, Section C.4.3.1.2 for level inspection, and Section C.4.4.2 for overfill prevention will be followed.

In the event the electronic leak detectors or level indicators for Sump Tank 1 or Sump Tank 2 are out of service, daily visual inspections will be performed each operating day (WAC-173-303-640).

Inspections pertaining to instrumentation monitoring is provided in Table I.2.

Table I.2. Inspection Plan for Instrumentation Monitoring

Item	Inspection	Frequency
2025-ED Load-In Station		
Level alarm LSH-59A-003	Monitor liquid level in Load-In Tanks TK-1 to prevent overflow	Continuously
Leak detector	Monitor for leakage in the Load-In Station tank pit sump	Continuously
Main Treatment Train		
Leak detector LAH-20B009	Monitor for leakage in the surge tank drainage sump	Continuously
Level alarm LAH-60A013	Monitor surge tank level to prevent overflow	Continuously
Level alarm LAHL-60C-111	Monitor liquid levels in the pH adjustment tank to prevent overflow	Continuously
Level alarm LAHL-60F-101	Monitor liquid levels in the first RO feed tank to prevent overflow	Continuously
Level alarm LAHL-60F-201	Monitor liquid levels in the second RO feed tank to prevent overflow	Continuously
Level alarms LAHL-60C-211	Monitor liquid levels in the effluent pH adjustment tank to prevent overflow	Continuously
Level transmitter LAHX-60H001A/B/C	Monitor liquid level in verification tanks to prevent overflow	Continuously
Leak detector LAH-20B010	Monitor for leakage in the verification tank drainage sump	Continuously
Secondary Treatment Train		
Level alarm LAHL-60I-001A/B	Monitor liquid levels in secondary waste receiver tanks A and B to prevent overflow.	Continuously
Level alarm LAHL-60J-001A/B	Monitor liquid levels in concentrate tanks A and B to prevent overflow.	Continuously
Level alarm LAHL-60I-107	Monitor liquid levels in the evaporator tank to prevent overflow.	Continuously
Level alarm LAHL-60J-036	Monitor liquid levels in the spray condenser tank to prevent overflow.	Continuously
Level alarm LAHL-60I-108	Monitor liquid levels in the distillate flash tank to prevent overflow.	Continuously
Level alarm LAH-60I-119	Monitor liquid levels in the entrainment separator tank to prevent overflow.	Continuously
Level alarm ~~transmitter~~ LAH-20B001	Monitor liquid level in Sump Tank 1 to prevent overflow.	Continuously
Level alarm ~~transmitter~~ LAH-20B002	Monitor liquid level in Sumo Tank 2 to prevent overflow.	Continuously
Leak detector LAH-20B003	Monitor for leakage to Sump No. 1.	Continuously

Hanford Facility RCRA Permit Modification Notification Forms

Part III, Operating Unit Group 5

325 Hazardous Waste Treatment Units

Index

Page 2 of 4: Conditions Page
Page 3 of 4: Addendum J
Page 4 of 4: Revision instructions

Submitted by Co-Operator:

Cameron M. Andersen — 11/14/17 Date

Reviewed by DOE Program Office:

Jeffery L. Bird — 12-14-17 Date

Hanford Facility RCRA Permit Modification Notification Form

Unit:	Permit Part
325 Hazardous Waste Treatment Units	**Part III, Operating Unit Group 5**

Description of Modification:

Conditions Page

LIST OF ADDENDA SPECIFIC TO OPERATING UNIT GROUP 5

Addendum A Part A Form, dated August 2015

Addendum B Waste Analysis Plan, dated May 2014

Addendum C Process Information, dated May 2014

Addendum D Groundwater Monitoring (Reserved)

Addendum E Procedures to Prevent Hazards, dated May 2014

Addendum F Preparedness and Prevention, dated May 2014

Addendum G Personnel Training, dated March 2017

Addendum H Closure Plan, dated March 2016

Addendum I Inspection Requirements, dated May 2014

Addendum J Contingency Plan, dated ~~March 2016~~December 2017

WAC 173-303-830 Modification Class	Class 1	Class '1	Class 2	Class 3
Please mark the Modification Class:	X			

Enter relevant WAC 173-303-830, Appendix I Modification citation number: A.1.

Enter wording of WAC 173-303-830, Appendix I Modification citation: Administrative and Informational Changes

Modification Concurrence ☑ Yes ☐ No

Reason for non-concurrence:

Reviewed by Ecology:

S. Dahl 2/20/18

S. Dahl Date

Hanford Facility RCRA Permit Modification Notification Form	
Unit: **325 Hazardous Waste Treatment Units**	Permit Part **Part III, Operating Unit Group 5**

Description of Modification:
Addendum J, Contingency Plan

Replace 325 Building Emergency Procedure in Addendum J with Revision 17 dated 5/22/17. See attached redline/strikeout for specific changes. No changes are made to the Addendum J "Applicability Matrix".

WAC 173-303-830 Modification Class	Class 1	Class 1	Class 2	Class 3
Please mark the Modification Class:	X			

Enter relevant WAC 173-303-830, Appendix I Modification citation number: A.1.
Enter wording of WAC 173-303-830, Appendix I Modification citation: Administrative and Informational Changes

Modification Concurrence ☑ Yes ☐ No
Reason for non-concurrence:

Reviewed by Ecology:
S. Dahl
2/20/18
Date

Revision Instructions:

Revise the OUG-5 Unit Specific conditions as shown herein.
Remove OUG-5 Contingency Plan (Rev 15) and replace with Rev 17

Pacific Northwest
NATIONAL LABORATORY
Proudly Operated by Battelle *Since 1965*

Pacific Northwest
NATIONAL LABORATORY
Proudly Operated by Battelle *Since 1965*

~~F&O~~ Building Emergency Procedure

BEP-325RPL

Building Emergency Procedure for the Radiochemical Processing Laboratory (325RPL)

Revision ~~#~~No. ~~15~~17
~~Revision~~Effective Date ~~01/18/16~~

Procedure Owner: PT Saueressig
Author: PT Saueressig

Approval: ~~RPL~~325RPL Manager, EM Hanson

Concurrence: 325RPL Building Manager, PT Saueressig
Emergency Preparedness, ~~AD Haller~~
JS Beck

	Emergency Preparedness, JE Kinzer Environmental ~~Planning~~Protection and ~~Emergency Preparedness, JA Stegen~~ Regulatory Programs, HT Tilden Materials and Waste ~~Operations~~Management Manager, TL VanArsdale Worker Safety and Health, EG Damberg
~~Work Location:~~	~~325RPL/300 Area~~
~~Identified Hazards:~~	~~N/A~~ ~~*See Section 4.0*~~
~~SES/~~USQ Reviewer: **~~Applicable to RPL ONLY:~~USQ Number:**	PT Saueressig RPL-~~2016-019S~~2017-124S
Use Category:	Reference ~~Use~~

Contents

1.0 General Information ..... 6~~5~~
- 1.1 Facility Name ..... 8~~6~~
- 1.2 Facility Location ..... 8~~6~~
- 1.3 Owner/Operator ..... 8~~7~~
- 1.4 Facility Description ..... 8~~7~~
- 1.5 Hanford Site Emergency Sirens/Alarms ..... 9~~8~~
- 1.6 Coordination Activities with Local Emergency Responders ..... 10~~9~~
- 1.7 Deviations from Technical Safety Requirements ..... 10~~9~~

2.0 Purpose of the Building Emergency Procedure ..... 10~~9~~
- 2.1 Distribution ..... 11~~9~~
- 2.2 Acronyms ..... 11~~10~~
- 2.3 Making Changes to the Building Emergency Procedure ..... 13~~10~~

3.0 Building Emergency Response Organization ..... 13~~10~~
- 3.1 Emergency Telephone Numbers ..... 13~~10~~
- 3.2 Building Emergency Response Organization ..... 15~~12~~
- 3.3 Building Emergency Response Organization - Emergency Operations Center Interface ..... 17~~13~~
- 3.4 Building Emergency Directors and Alternates ..... 19~~14~~
- 3.5 Incident Command Post Communicator ..... 21~~16~~
- 3.6 Assisting Communicator ..... 22~~17~~
- 3.7 Incident Command Post Recorder ..... 22~~17~~
- 3.8 Management Support Group Lead ..... 22~~17~~
- 3.9 Management Support Group Liaison ..... 22~~17~~
- 3.10 Staging Area Supervisor ..... 23~~18~~
- 3.11 Zone Wardens ..... 23~~18~~
- 3.12 Facility Operations Specialist ..... 24~~19~~
- 3.13 Hazard Communicator ..... 24~~19~~
- 3.14 Radiological Hazard Assessors ..... 24~~19~~
- 3.15 Chemical Hazard Assessors ..... 24~~19~~
- 3.16 Individual Staff Member Responsibilities ..... 25~~20~~
- 3.17 PNNL Incident Manager ..... 26~~21~~
- 3.18 Facility Visitor Responsibilities ..... 26~~21~~
- 3.19 Supervisors/Manager Responsibilities ..... 26~~21~~
- 3.20 Unique Program Laboratory Expertise ..... 26~~21~~
- 3.21 Environment, Safety, and Health Advisor Responsibilities ..... 27~~22~~
- 3.22 Line Management ..... 27~~22~~
- 3.23 New Staff Assigned to 325RPL ..... 27~~22~~

4.0 Implementation of the Building Emergency Procedure (BEP) ..... 28~~23~~

5.0 Facility Hazards ..... 29~~24~~
- 5.1 Hazardous Materials ..... 29~~24~~
- 5.2 Physical (Industrial) Hazards ..... 30~~24~~
- 5.3 Dangerous Mixed Waste ..... 30~~25~~
- 5.4 Radioactive Materials ..... 30~~25~~
- 5.5 Criticality ..... 30~~25~~

6.0 Potential Emergency Conditions and Appropriate Response ..... 31~~25~~
- 6.1 Explosion/Fire/Fire Alarm ..... 31~~25~~

6.2 Hazardous Material/Dangerous or Mixed Waste Spill ..... 33~~28~~
6.3 Unusual, Irritating or Strong Odors ..... 37~~31~~
6.4 Potential Radiological Material Release ..... 38~~32~~
6.5 Criticality and Criticality Safety Limit Violations ..... 39~~33~~
6.6 Loss of Electrical Power/Reduced Ventilation ..... 41~~35~~
6.7 Natural Phenomena Events ..... 42~~36~~
6.8 Bomb Threats/Suspicious Objects ..... 42~~36~~
6.9 Active Shooter in the Building ..... 44~~38~~
6.10 Notice of a PNNL Lockdown ..... 44~~38~~
6.11 Declared Emergency in the 300 Area ..... 45~~39~~
7.0 Facility Take Cover — Shutdown of Heating, Ventilation, and Air-Conditioning System ..... 45~~39~~
8.0 Utility Disconnects ..... 46~~40~~
8.1 Electrical ..... 46~~40~~
8.2 Potable/Process Water ..... 46~~40~~
8.3 Gas Supplies ..... 46~~40~~
8.4 Steam ..... 46~~40~~
8.5 Air ..... 46~~40~~
8.6 Compressed Air ..... 46~~40~~
8.7 Ventilation ..... 47~~40~~
8.8 Fire Protection Supply Water ..... 47~~41~~
8.9 Dry Pipe Outside Screw and Yoke (Riser 6) ..... 47~~41~~
8.10 325RPL Ramp Sump Pump ..... 47~~41~~
8.11 325RPL Decontamination Shower/Sink ..... 48~~41~~
9.0 Termination, Incident Recovery, and Restart ..... 48~~42~~
9.1 Termination ..... 48~~42~~
9.2 Recovery ..... 48~~42~~
9.3 Restart ..... 50~~44~~
10.0 Emergency Equipment ..... 50~~44~~
10.1 Portable Emergency Equipment ..... 50~~44~~
10.2 Fire Control Equipment ..... 51~~44~~
10.3 Communications Equipment/Warning Systems ..... 51~~45~~
10.4 Personal Protective Equipment ..... 52~~46~~
10.5 Spill Control and Containment Supplies ..... 52~~46~~
11.0 Evacuation of Persons and Visitors ..... 54~~47~~
12.0 Emergency Action Levels ..... 55~~48~~
12.1 300 Area Protective Actions ..... 55~~48~~
12.2 325RPL Emergency Action Levels ..... 55~~48~~
13.0 Attachments ..... 56~~49~~
Attachment 1 — Emergency Equipment and Evacuation Routes 1st Floor ..... 57~~50~~
Attachment 2 — Emergency Equipment and Evacuation Routes 2nd and 3rd Floors ..... 57~~50~~
Attachment 3 — Emergency Equipment and Evacuation Routes Mezzanine and Basement ..... 58~~51~~
Attachment 4 — Zone Warden Areas 1st Floor ..... 59~~52~~
Attachment 5 — Zone Warden Areas 2nd and 3rd Floors ..... 61~~54~~
Attachment 6 — Zone Warden Areas Mezzanine and Basement ..... 61~~54~~
Attachment 7 — 325RPL Staging Area Map ..... 62~~55~~
Attachment 8 — 325RPL Alternate Staging Area ..... 63~~56~~
Attachment 9 — Location of 325RPL in the 300 Area ..... 64~~57~~

14.0 References and Source Requirements ..... 67~~59~~
14.1 References *(as revised)* ..... 67~~59~~
14.2 Source Requirements *(as amended)* ..... 67~~59~~
14.3 Emergency Preparedness Checklists (as revised) ..... 68~~60~~
Procedure Revision History ..... 69~~61~~

1.0 General Information

The 325 Building/Radiochemical Processing Laboratory (325RPL) Building Emergency Procedure (BEP) has been designed to provide information necessary to minimize risks to personnel, facilities, programs, and the environment in the event of an emergency. This procedure applies to all resident staff, visitors, vendors, and contractor/subcontractor personnel. If an event is of a security nature (bomb threat, hostage situation, or other act of violence), security procedures may supersede this procedure and will be assessed on a case-by-case basis.

This facility contains both radioactive and hazardous materials in operations, storage, and handling. The 325RPL Building poses a possible significant hazard to adjacent facilities, personnel, programs, and the environment.

This BEP includes the contingency plans and emergency procedures for hazardous waste management activities as referenced by the following Washington Administrative Codes (WAC).

- WAC-173-303-340, "Preparedness and Prevention"
- WAC-173-303-350, "Contingency Plan and Emergency Procedures"
- WAC-173-303-360, "Emergencies"

This plan must be implemented whenever an emergency threatens human health and the environment[1].

Emergencies may arise from, but are not limited to, the following:

- fire
- explosion
- loss of service systems
- medical emergency
- bomb threats
- criticality
- criminal activity
- incidents at other facilities
- natural hazards or natural forces
- ~~pill~~spill/release to the environment requiring assistance
- hazardous materials release~~.~~

Expected responses are those actions which are intended to minimize the effects of a situation while providing optimum protection to personnel. Expected responses include notification to the ~~PNNL~~Pacific Northwest National Laboratory (PNNL) Security Operations Center (SOC), Building Manager (BM), Building Emergency Response Organization (BERO), and personnel in the facility. This procedure also provides plans for notifying personnel to take safe actions such as "take cover," "evacuate," or other planned actions dictated by the event. The procedure provides for formal notification and reporting.

Other emergency response agencies available to assist the Building Emergency Director (BED) and Incident Commander (IC) from offsite are described in U.S. Department of Energy Richland Operations Office (DOE/RL) 94~~-~~-02, *Hanford Emergency Management Plan*, Section 3.0.

[WAC 173-303-350 (3)(d~~)].~~)]

[1] Section 1.0, Paragraph 4: Permit requirement, Class 1 Modification 03/31/16

~~The BED will provide BERO members with annual BEP training.~~ The BED and Alternate BEDs will receive annual training from ~~Pacific Northwest National Laboratory (~~PNNL~~)~~ Emergency Preparedness (EP).

PNNL policy is to provide for the safety of its staff, contractor/subcontractor personnel, visitors, and members of the public in case of an emergency incident. PNNL line management has the responsibility to execute this policy and to see that all staff understands their own responsibilities and actions to be taken in an emergency. Every staff member is responsible for using the appropriate safety instructions and procedures and remaining alert to unsafe conditions or acts while performing his or her job. All personnel are responsible for responding to emergency conditions to minimize adverse impacts.

In the event of an emergency condition in the facility, members of the 325RPL BERO will perform their duties as described in this procedure. Specific emergency actions for response to events will be applicable as specified in this BEP. Those BERO members whose assistance is needed to mitigate a lesser event will be notified by telephone or personal contact by the BED or delegate. Occupants of the facility who are not members of the BERO shall follow the standard PNNL Emergency Preparedness requirements at How Do I...? (HDI) Work Control, *Basic Staff Practices*.

BERO members will utilize checklists during an incident. The RPL BERO Checklists are in compliance with DOE-0223 RLEP 1.1 and are update by the Emergency Preparedness Program as necessary, once changes have been received from the Hanford Site Emergency Preparedness Program.

The building fire alarm is the primary means of evacuation and notification for full activation of the BERO. Emergency telephone numbers are listed in Section 3.0.

This procedure will be reviewed at least annually and amended if necessary or whenever any of the following occurs. **[WAC-173-303-350(5)]**

- The applicable regulations or the Hazardous Waste Treatment Unit (HWTU) permit is revised.
- The procedure fails in an emergency.
- The facility changes in a manner that materially increases or decreases the potential for fire, explosion, or release of hazardous waste or hazardous waste constituents, or in any way that changes the response necessary in an emergency.
- The emergency coordinating personnel list changes.
- The emergency equipment list changes[2].

[2] Section 1.0, Paragraph 11: Permit Requirement, Class 1 Modification 09/30/15

1.1 Facility Name

Name	325 Building/Radiochemical Processing Laboratory (325RPL~~), 325 Building~~)
Address	325 Cypress St., 300 Area, Richland, WA 99354
EPA Generator ID Number	WA 7890008967

1.2 Facility Location

The 325RPL ~~Building~~ is in the southern portion of the 300 Area, north of Cypress Street.

1.3 Owner/Operator

The 325RPL Building is owned/operated by the U.S. Department of Energy (DOE) and co-operated by PNNL. The 325RPL Manager is the senior line manager in the 325RPL and has overall responsibility for all aspects of operations in the facility. The 325RPL Manager is part of the Nuclear Operations Division ~~(NOD)~~ within the Facilities and Operations (F&O) Directorate. The 325RPL BM reports directly to the 325RPL Manager and supports operations and maintenance in the facility. The 325RPL BM is also the primary BED.

1.4 Facility Description

The 325RPL Complex, as referred to in this BEP, consists of the following.

- 325RPL (Building)
- 325RPL Filter Building
- East Storage Yard located east of the 325RPL ~~Building~~
- North Storage Pad located north of the 325RPL ~~Building.~~

The 325RPL ~~Building~~ houses laboratories and specialized facilities including general-purpose chemical laboratories, the High -Level Radiochemistry Facility (HLRF), the Shielded Analytical Laboratory, fissionable material storage areas, and 325RPL HWTU. The general-~~-~~purpose laboratories characterize fuel, single- and double-shell tank waste, environmental samples, fusion/tritium samples, and other wastes. The radiochemistry facility includes areas for glove boxes, hot cells, cask handling, storage, and isolation of isotopes for unique applications like medical use. Analytical laboratory operations are conducted on small amounts of highly radioactive materials such as samples of single-shell tank waste. The HWTU treats hazardous, mixed, low-level radioactive and transuranic waste.

The 325RPL Filter Building is located on the northwest corner of the main 325RPL building and houses the final stage high-efficiency particulate air ~~(HEPA)~~ filters and the main exhaust fans.

The East Storage Yard is a fenced enclosure adjacent to the east side of the 325RPL ~~Building~~ and is designated as an outdoor Radioactive Material Area (RMA).

The North Storage Pad is the foundation pad of the former 328 Building and will be designated as an outdoor RMA.

> **NOTE:** *Footnotes in this document note the provisions in the BEP that are subject to Resource Conservation and Recovery Act (RCRA) Permit# WA7890008967. These actions in the BEP implement RCRA permit requirements.*

1.5 Hanford Site Emergency Sirens/Alarms[3]

> **NOTE:** *Some signals may not be applicable to the building; however, they may be heard in other parts of the Hanford Site. In the event of "take cover" alarm, the BERO will respond to the 325RPL ~~Building~~ lunchroom/lobby area for BED direction.*

Hanford Site Emergency Sirens/Alarms		
Signal	**Meaning**	**Actions**
Slow whoop followed by a voice message~~.~~	Fire	Vacate building and proceed to staging area.
Steady tone on whistle, or siren~~.~~	Area Evacuation	Vacate building and proceed to staging area. Personnel in vehicles shall proceed to the nearest occupied facility and report to the Staging Area Supervisor (SAS).
Wavering siren or short blasts on whistle or siren~~.~~	Take Cover (Shelter)	Proceed to shelter or stay indoors. Close all exterior doors, turn off all intake ventilation (only if it can be done safely), and notify manager of whereabouts. Personnel in vehicles shall proceed to the nearest occupied facility and report to facility management. Staff should refrain from eating and drinking during a take cover event if physically able, until an appropriate evaluation of the event can be made.
AH-OO-GAH horn (howler) or flashing blue light (in high noise areas~~).~~)	Nuclear Criticality	~~Run~~Leave the building immediately (walk with purpose) through the closest exit, do NOT stop for a survey and get at least ~~100~~ 15 feet of separation from ~~building; proceed~~the facility. Maintain a minimum of 15 feet distance during relocation to the primary staging area ~~along a path that does not take you closer to the building~~.

[3] Section 1.5: Permit Requirement, Class 1 Modification 03/31/16

Hanford Site Emergency Sirens/Alarms		
Signal	**Meaning**	**Actions**
Variable color (red, amber) light with ringing bell or whistle~~.~~	Airborne Radioactivity or Area Radiation Monitor	Stop work activities; immediately exit the area; notify Radiological Control personnel.
Communicator Notification System (CNS), telephone call displayed from 375-2124~~.~~	PNNL Emergency Communications	Lift receiver, say "**HELLO**", listen to the message and follow the actions designated.
Telephone Notification System ~~(TNS)~~	Hanford Site Emergency Communications	Lift receiver, say "**HELLO**", listen to the message and follow the actions designated. ~~**NOTE:** *This system is only applicable to facilities on the Hanford Site (i.e., 300/600 Areas).*~~ **NOTE:** *This system is only applicable to facilities on the Hanford Site (i.e., 300/600 Areas).*

1.6 Coordination Activities with Local Emergency Responders[4]

Interfaces and coordination with offsite agencies are in the planning, preparedness, response, and recovery elements of the Hanford Emergency Management Program. The DOE has developed and maintains agreements to formalize areas of understanding, cooperation, and support with offsite agencies. These agreements are applicable to all Hanford facilities, including the 325RPL. Summaries of these Memorandum of Agreements~~, or MOAs,~~ are given in DOE/RL 94-02, Table 3-1.

1.7 Deviations from Technical Safety Requirements

Emergency actions that depart from approved Technical Safety Requirements (TSR) may be taken when no actions consistent with the TSRs are immediately apparent, and when these actions are needed to protect workers, the public, or the environment from imminent and significant harm.

Such actions shall be approved, as a minimum, by the 325RPL BM, the 325RPL Manager, or the 325RPL BED. If emergency actions are taken, verbal notifications shall be made to the Pacific Northwest Site Office (PNSO) within two hours and by written reports to the DOE Headquarters within 24 hours. **[TSR AC 5.11]**

2.0 Purpose of the Building Emergency Procedure

This procedure describes the processes and information necessary in the event of an emergency for the 325RPL BERO members to react to the emergency and to perform the following actions:

- Maximize safety, minimize risk to life, and provide prompt efficient treatment for injured persons.

[4] Section 1.6: Permit Requirement, Class 1 Modification 03/31/16

- Provide all members of the BERO with an understanding of their roles and responsibilities in the event of an emergency.
- Minimize the effects on the health and safety of personnel, property, the environment, programs, and the public.
- Provide prompt internal and external notifications to the responsible authorities.

2.1 Distribution

- At a minimum, controlled document copies of this BEP will be located as follows:
- BED emergency response bag
- ~~325RPL Power Operator Office (Room 900)~~
- BM file
- 325RPL HWTU's Operating Records[5]
- EP Program Office
- PNNL SOC
- Hanford Emergency Operations Center (EOC) (Hanford Site facilities only)
- Management Support Group (MSG) emergency response bag (LSB/2D55)
- Alternate Incident Command Post (ICP) (Building 350, Room 111).

The 325RPL BEP may be viewed and/or printed by clicking on the F&O Building Information webpage link. Copies of the BEP that are printed from this website are considered *uncontrolled copies.*

2.2 Acronyms

PNNL Abbreviations & Acronyms

325RPL 325 Building/Radiochemical Processing Laboratory ~~(325 Building)~~

~~BED Building Emergency Director~~

~~BEP Building Emergency Procedure~~

~~BERO Building Emergency Response Organization~~

~~BM Building Manager~~

~~CAM Continuous Air Monitor~~

~~CAS Criticality Alarm System~~

~~CHA Chemical Hazard Assessor~~

~~CMS Chemical Management System~~

~~CNS Communicator Notification System~~

~~CSM Cognizant Space Manager~~

~~DOE U.S. Department of Energy~~

~~DOE/RL U.S. Department of Energy Richland Operations Office~~

~~DSA Documented Safety Analysis~~

~~EAL Emergency Action Level~~

[5] Section 2.1, Bullet 4: Permit Requirement, Class 1 Modification 03/31/16

~~EIP – Emergency Information Posting~~
EOC Emergency Operations Center
EP Emergency Preparedness
EPA Environmental Protection Agency (EPA Generator Identification Number)
~~EPRP – Environmental Protection and Regulatory Program~~
~~ESM – Electronic Storage Media~~
~~F&O – Facilities and Operations (Directorate)~~
~~FOS – Facility Operations Specialist~~
~~FSR – Field Services Representative~~
~~HDI – How Do I...?~~
~~HEPA high-efficiency particulate air (filter)~~
~~HFD – Hanford Fire Department~~
~~HLRF High-Level Radiochemistry Facility~~
~~HWTUHazardous Waste Treatment Unit~~
IC Incident Commander
ICP Incident Command Post
IM Incident Manager
~~IOPS – Integrated Operations System~~
LA/LAI Limited Area Island
~~MIT – Map Information Tool~~
~~MOA – Memorandum of Agreement~~
~~MSG – Management Support Group~~
N/A non-~~-~~applicable
~~NOD – Nuclear Operations Division~~
~~OS&Y outside screw and yoke~~
PNNL Pacific Northwest National Laboratory
~~PNSO Pacific Northwest Site Office~~
~~POC – Patrol Operations Center~~
~~PPE – personnel protective equipment~~
~~RBA – Radiological Buffer Area~~
~~RCA – Radiologically Controlled Area~~
~~RCRA Resource Conservation and Recovery Act~~
RHA Radiological Hazard Assessor
~~RPT – Radiological Protection Technologist~~
SAS Staging Area Supervisor
~~SDS – Safety Data Sheet~~
~~SME – Subject Matter Expert~~
SOC Security Operations Center

TDP Testing Designated Position

~~TNS Telephone Notification System~~

~~TSD Treatment, Storage, Disposal~~

~~TSR Technical Safety Requirements~~

~~UDAC Uniform Dose Assessment Center~~

~~WAC Washington Administrative Code~~

2.3 Making Changes to the Building Emergency Procedure

PNNL-MA-110, *PNNL Emergency Management Plan,* requires the BED to keep the Emergency Preparedness (EP) program manager advised of any changes to the BEDs. This may be accomplished by memo or email. The HWTU Permit Coordinator and the RCRA Subject Matter Expert ~~(SME)~~ are also required to be notified before any changes are made to the BEP.

To request revisions to this procedure, refer to ADM-001, *Document Production & Distribution.*

3.0 Building Emergency Response Organization

3.1 Emergency Telephone Numbers

In the event of an emergency, specific detailed facility information may be needed. Knowledge of the building, utilities, and radiation hazards can be obtained from the staff listed in the following table. Contact the PNNL SOC at 375-2400 if unable to contact any of these staff members using the numbers provided. **[WAC-173-303-350(3)(d)]**

Any Emergency – PNNL Security Operations Center (SOC): 375-2400				
NOTE: *With the appropriate approval, BED home addresses can be obtained at the PNNL SOC.*				
Responsibility	**Name**	**Office**	**Home**	**Cell**
***BED**[6]	Paul T. Saueressig	375-5352	N/A	619-3873
***BED1**	Chris S. Dreyer	375-5468	628-9995	420-0533
***BED2**	Dan G. Wandler	375-5179	N/A	438-1053
***BED3**	Eric M. Hanson	375-5351	N/A	713-0860
Additional F&O Management Contacts				
Utility Operations Work Team Lead	TJ Vanderlinden	375-2829		521-8024
Nuclear Operations Work Team Lead	Don Cravens	375-5398		948-1053
Fire Protection Engineer	~~Dan Kester~~Neal Hara	371-~~7383~~7655		~~308-9108~~
Safety and Health Representative	Richard Davis~~Jason Sweesy~~	~~372-4122~~ 371-7776		~~438-4974~~ 521-0505
F&O MSG	Reed Sharp	371-7042		
EOC RPL Tech Representatives	Karl Pool	375-5246		851-6769
	Randy Thornhill	375-5220		
	Franciska Steen	375-5546		
Unique Program Laboratory Expertise				
Waste Management – 90-Day	Zane Turner	375-5088		554-4359
Low Level TSD	Trevor VanArsdale	375-3814		531-6441
Environmental Compliance Representative	John Holland	375-5002		521-1211
Alternate ICP:	350 Building / Room ~~161~~111	~~376~~375-7565 ~~376-7965 (FAX)~~		
Environmental Support Contact *(regulatory notifications only)*		375-2400 375-~~1648~~2154		
Hanford Fire Department		375-2400 or 373-0911		
Medical and First Aid		375-2400		
Hazardous Materials Response Team (Benton-Franklin County Hazardous Material Response Team)		375-2400		
Ambulance Services		375-2400		
Police Department		375-2400		
Hanford Patrol		373-3800		
PNNL Duty Officer(s) and PNNL Information Line		375-2154		
Off Normal Event Reporting		375-2400		
Work-related injury/illness of a non-emergency nature: PNNL Occupational Health Clinic, LSB 1st Floor, Section E		371-7848		

[6]Section 3.1, BED Information: Permit Requirement, Class 1 Modification 03/31/16. See Permit Condition II.A.4.

** These are Testing Designated Positions (TDP) per HDI Exhibit, Perform Substance Abuse Testing. Any changes to these positions require coordination through the TDP Administrator.*

3.2 Building Emergency Response Organization

The 325RPL BERO is an emergency response organization with clearly defined responsibilities. The BERO consists of pre-designated and trained individuals assigned to emergency response activities associated with the 325RPL. In addition, other positions and/or personnel in the 325RPL have responsibilities associated with emergency responses, preparedness, and notifications.

BERO Position	Primary Responder	1st Alternate	2nd Alternate
***Incident Command Post Communicator**	**Christopher Dreyer** Work: 375-5468 Cell: 420-0533 Home: 628-9995	**Johnny Trevino** ~~**Carl Bowman**~~ Work: 375-~~7558-~~5177 Cell: ~~207-716-7191~~ ~~Home: 207-716-7191~~ 554-8531	~~**Teresa Campbell**~~ ~~Work: 375-5119~~ ~~Cell: 947-0332~~ ~~Home: 943-6122~~
Assisting Communicator	**Scott Colby** Work: 375-5350 Cell: ~~554-1780~~971-337-0745	**Kathy Hall** Work: 375-5346 Cell: ~~528-5954~~948-1213	
Chemical Hazards Assessor	~~**Jason Sweesy**~~ **Richard Davis** Work: ~~372-4122~~371-7776 Cell: ~~438-4974~~521-0505	**Jason Sweesy** ~~**Mike Zabel**~~ Work: ~~375-5013~~ 372-4122 Cell: ~~N/A~~ ~~Home: 378-4278~~ 438-4974	**Mike Zabel** ~~**Doug Falk**~~ Work: ~~371-7097~~ 375-5013 Cell: ~~308-9101~~ ~~Home: 967-5063~~378-4278
Incident Command Post Hazards Communicator	**Terry Milham** Work: 375-5007 Cell: 539-3910 Home: 627-0200	**Bob Free** Work: 375-5597 Cell: 521-5916 ~~Home: 627-0200~~	**Steve Ruisi** Work: 375-6656 Cell: 528-6451 ~~Home: N/A~~
Radiological Hazards Assessor	~~**Lorna Brown**~~ **Tim Snider** Work: 375-~~5006~~5355 Cell: ~~948-2577~~ ~~Home: N/A~~308-9799	**Jenny Martin** Work: 371-7788 Cell: 374-7581 Home: 628-0561	**Holly Black-Kania** Work: 371-6930 Cell: 539-7283 ~~Home: N/A~~
Incident Command Post Recorder	**Terri Mars** Work: 375-5661 Cell: 539-0722	**Kathy Hall** Work: 375-5346 Cell: ~~528-5954~~ 948-1213	**Kristie Lombardo** Work: 375-5353 Cell: 948-5591

***Facility Operations Specialist**	**Dan Wandler** Work: 375-5179 Cell: 438-1053 ~~Home: 438-1053~~	**John Logan** Work: 375-5168 Cell: ~~438-2079~~ ~~Home:~~ 438-2079	**Johnny Trevino** Work: 375-5177 Cell: 554-8531 ~~Home: N/A~~
Staging Area Supervisor	**Victor Sauceda** ~~**Teresa Schlotman**~~ Work: 375-~~5323~~ ~~Cell: N/A~~ ~~Home: N/A~~5547	**Teresa Schlotman** ~~**Kristie Lombardo**~~ Work: 375-~~5353~~ ~~Cell: 948-5591~~ ~~Home: N/A~~5323	**Kristie Lombardo** ~~**Victor Sauceda**~~ Work: 375-~~5547~~5353 Cell: ~~N/A~~ ~~Home: N/A~~ 948-5591
PNSO Facility Representative	**Derek Wright** Work: 372-4100 Cell: ~~509-~~392-9872 Home: 803-640-3605	**Jeff Carlson** Work: 372-4750 Cell: ~~509-~~539-2044 Home: 582-9769	**Rob Yasek** Work: 372-4023 Cell: ~~509-~~554-4471 Home: 371-8105

** These are Testing Designated Positions (TDP) per HDI subject area Workplace Substance Abuse. Any changes to these positions require coordination through the TDP Administrator.*

3.3 Building Emergency Response Organization - Emergency Operations Center Interface

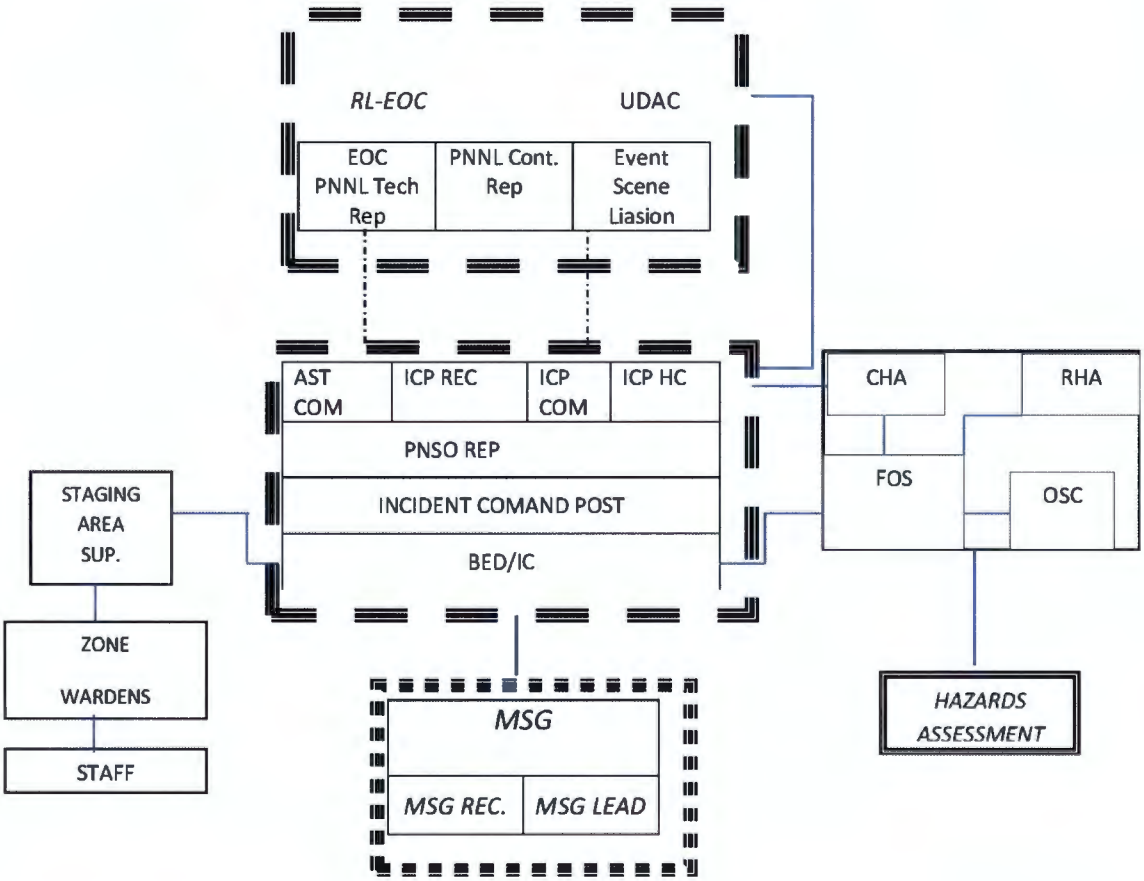

Legend			
AST	Assisting	IH	Industrial Hygienist
BED	Building Emergency Director	MSG	Management Support Group
CHA	Chemical Hazards Assessor	OSC	Operations Section Chief
COM	Communicator	REC	Recorder
CONT	Contractor	REP	Representative
EOC	Emergency Operations Center	RHA	Radiological Hazards Assessor
FOS	Facility Operations Specialist	SUP	Supervisor
HC	Hazards Communicator	UDAC	Unified Dose Assessment Center
IC	Incident Commander		
ICP	Incident Command Post		

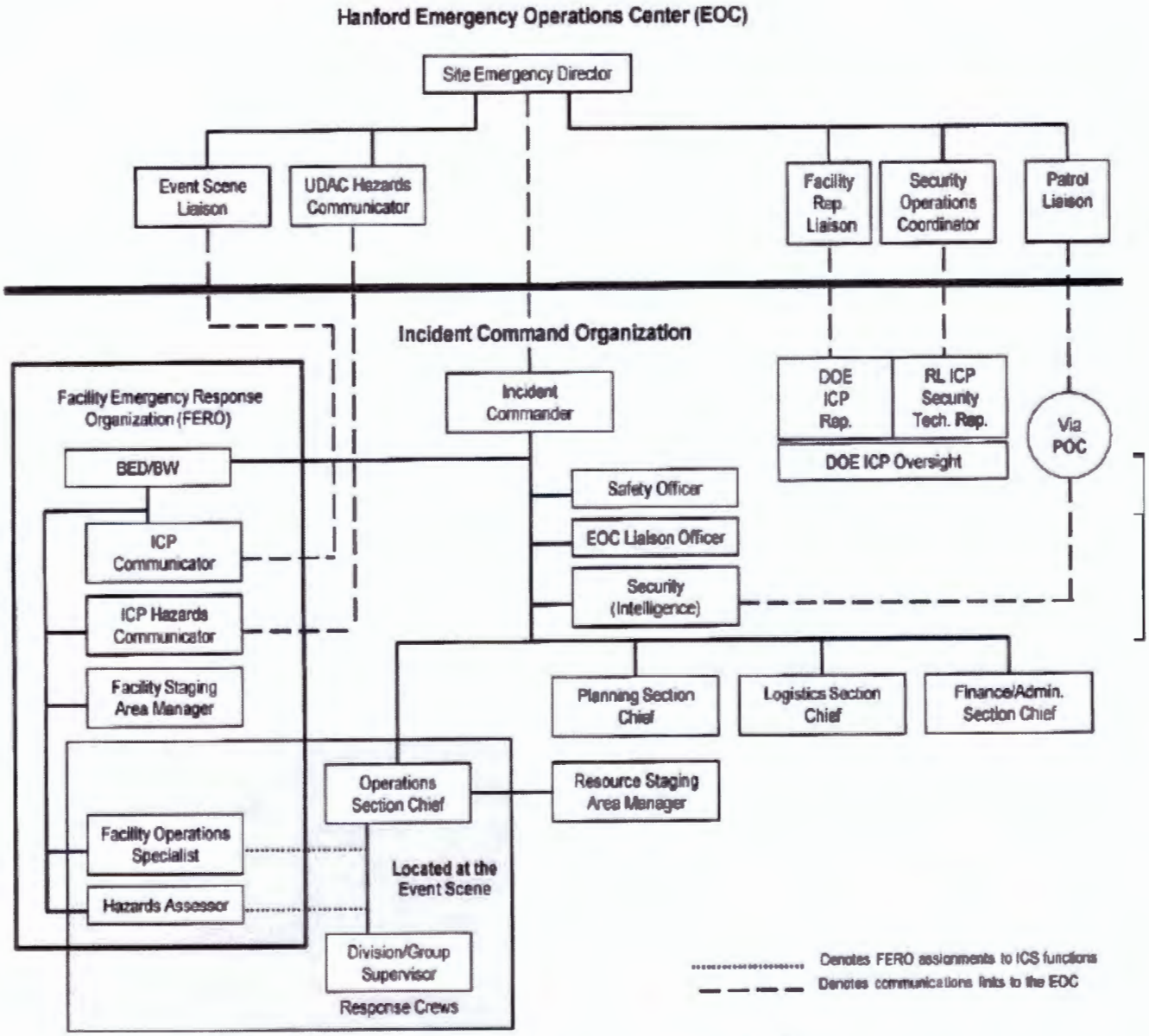

BED	Building Emergency Director	MSG	Management Support Group
CHA	Chemical Hazards Assessor	OSC	Operations Section Chief
COM	Communicator	REC	Recorder
CONT	Contractor	REP	Representative
EOC	Emergency Operations Center	RHA	Radiological Hazards Assessor
FOS	Facility Operations Specialist	SUP	Supervisor
HC	Hazards Communicator	UDAC	Unified Dose Assessment Center
IC	Incident Commander		
ICP	Incident Command Post		

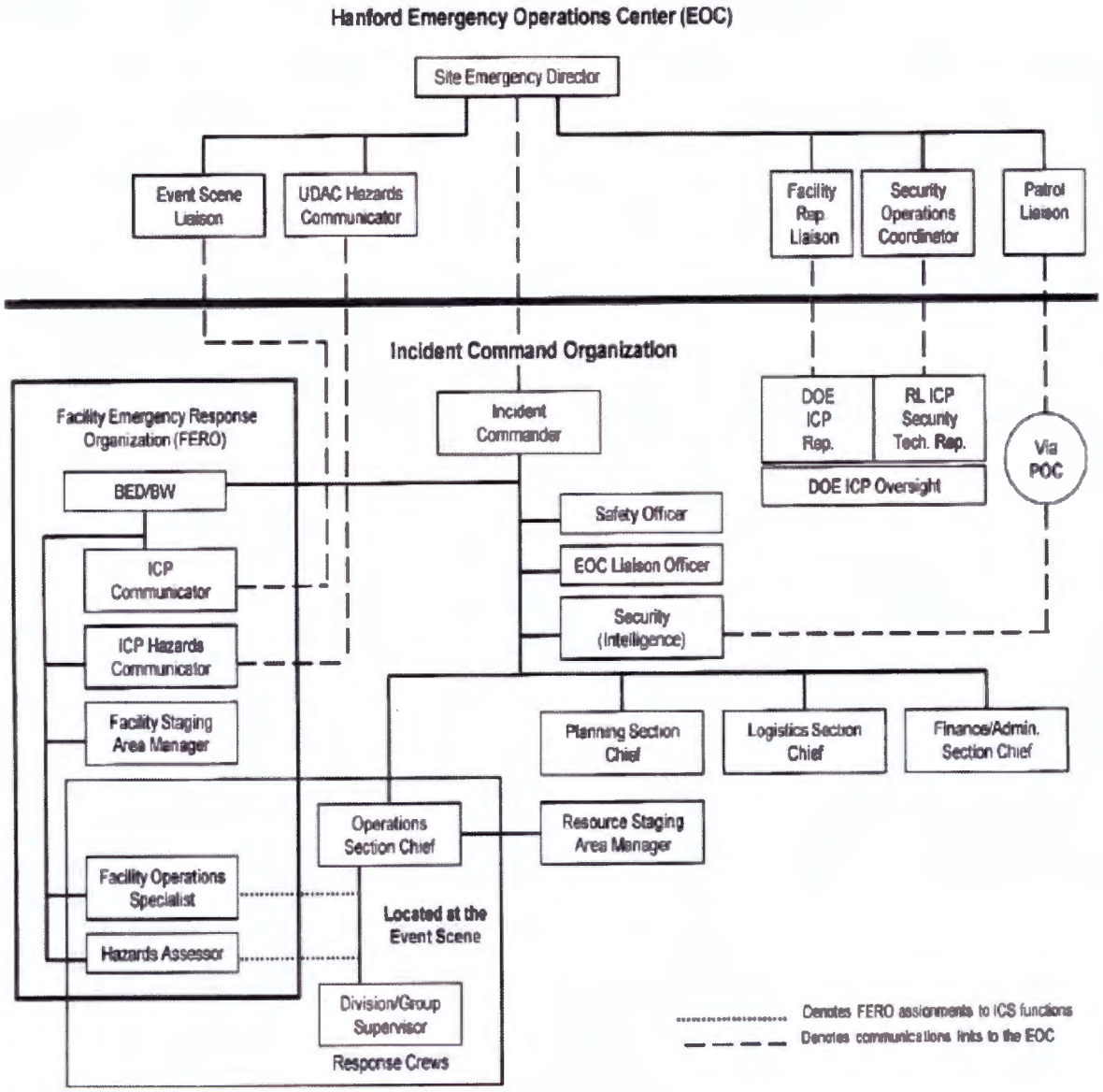

3.4 Building Emergency Directors and Alternates

The BED has the responsibility for the welfare and safety of the building personnel and for directing efforts to control, evaluate, and terminate the event if the building is the site of an event. The BED performs duties of the Emergency Coordinator as prescribed under WAC 173-303-360 until relieved by the IC, and has the authority to commit the resources needed to carry out the BEP.

The BED manages facility operations and personnel during an emergency and is responsible for implementation of appropriate emergency procedures and their follow-up, 24 hours a day. The BED has the authority to commit the resources necessary to carry out emergency plan activities[7]. Activities include:

[7] Section 3.4, Paragraphs 1 and 2: Permit Requirement, Class 1 Modification 09/30/15

- Directing configuration control over facility systems and components at the event scene~~.~~
- Activating the BERO~~.~~
- Assessing the event scene[8]~~.~~
- Allocating personnel to conduct facility-specific emergency response actions within the affected facility boundary (including acting as or delegating duty as the Facility Operations Specialist (FOS) and taking appropriate protective actions in response to events occurring in other onsite geographic areas or adjacent facilities~~).~~)
- Categorizing the incident and notifying the PNNL Environmental Support Contact and/or the EOC Shift Office[9]~~.~~
- Communicating with the Environmental Protection and Regulatory Programs ~~(EPRP).~~
- Initiating activation of the MSG~~.~~
- Reviewing the Emergency Action Level (EAL) criteria (PNNL-EAL-325RPL, *Emergency Action Level Tables for the RPL*) and providing an initial EAL classification to the EOC Shift Office[10]~~.~~
- Directing implementation of initial preplanned area/site protective actions~~.~~
- Identifying an alternate staging area in the event of an extended building evacuation during adverse weather~~.~~
- Determining personnel accountability status~~.~~
- Performing the necessary steps in *EP-BED-325RPL, Building Emergency Director Checklist*~~.~~
- Verifying other BERO positions use checklists as appropriate~~.~~
- Verifying that preservation of evidence at the event scene is taken into consideration during the event~~.~~
- Developing and transmitting event reports to maintain accurate and complete records of events, decisions, and actions during an event~~.~~
- Verifying the appropriate alarms are sounded when necessary[11]~~.~~
- Providing information and assistance to the responding agencies as requested to mitigate the event, including:
  - Identifying the character, exact source, amount, and extent of any released materials.
  - Taking reasonable measures (e.g., stopping processes/operations, collecting/containing released waste, removing/isolating containers) necessary to make sure

[8] Section 3.4, Paragraph 2, Bullet 3: Permit Requirement, Class 1 Modification 09/30/15
[9] Section 3.4, Paragraph 2, Bullet 5: Permit Requirement, Class 1 Modification 09/30/15
[10] Section 3.4, Paragraph 2, Bullet 8: Permit Requirement, Class 1 Modification 03/31/16
[11] Section 3.4, Paragraph 2, Bullet 16: Permit Requirement, Class 1 Modification 09/30/15

that fires, explosions, and releases do not occur, recur, or spread to other dangerous waste.

- Monitoring for leaks, pressure buildup, gas generation, or ruptures in valves, pipes, or other equipment as appropriate[12].

- Approving re-entry and/or rescue operations~~.~~
- Arranging care for any injured persons and contacting their line management~~.~~
- Notifying the HWTU permit personnel of any planned changes to the BEP~~.~~
- Verifying hazardous spill/release events are logged in the HWTU operating records~~.~~
- Taking appropriate actions during adverse chemical conditions; see HDI Exhibit, *Respond to Spill or Adverse Chemical Condition*~~.~~
- Providing a thorough briefing to the Hanford Site emergency responder (e.g., Hanford Fire Department (HFD), Hanford Patrol~~).~~)
- Maintaining emergency equipment[13]~~.~~
- Verifying that the Environmental Support Contact will provide any necessary notifications to regulatory agencies, such as the Washington State Department of Ecology, and verifying that required written reports to regulatory agencies are completed within 15 days of event termination[14]~~.~~
- Performing an annual review and update of the 325RPL BEP~~.~~
- Planning, conducting, and documenting results of building emergency drills~~.~~
- Informing the EP program manager of any changes in 325RPL BEDs~~.~~
- Being thoroughly familiar with the following:
  - the 325RPL BEP
  - all operations and activities
  - locations and characteristics of waste handling
  - locations of all records
  - physical layout of the building and area of responsibility[15].

3.5 Incident Command Post Communicator

The individual responsible for conveying the event emergency classification to the EOC Shift Office, phoning the Patrol Operations Center ~~(POC)~~ at ~~(9)~~911, or 373-0911 (cell) to initiate a conference telephone bridge between the ~~POC~~Patrol Operations Center, EOC Shift Office, and ICP Communicator. Initiates and maintains a communication line between the Event Scene Liaison at the Hanford EOC and the ICP. As a precautionary measure, the BED

[12] Section 3.4, Paragraph 2, Bullet 17: Permit Requirement, Class 1 Modification 09/30/15
[13] Section 3.4, Paragraph 2, Bullet 24: Permit Requirement, Class 1 Modification 09/30/15
[14] Section 3.4, Paragraph 2, Bullet 25: Permit Requirement, Class 1 Modification 03/31/16
[15] Section 3.4, Paragraph 2, Bullet 29: Permit Requirement, Class 1 Modification 03/31/16

makes sure that this position is staffed for all events. The ICP Communicator is responsible for completing *EP-ICPC, Incident Command Post Communicator Checklist for Hazardous Facilities*.

3.6 Assisting Communicator

Provides assistance to the ICP Communicator as directed by:

- Keeping the IC and BED aware of all transmitted and received information.
- Maintaining a log of communications sent and received.
- Establishing and maintaining a communication line with the Technical Support Representative (376-7148) in the Hanford EOC and the ICP throughout the incident.

3.7 Incident Command Post Recorder

Records in a timeline format, event-related notifications and activities associated with the direction administered and information received at the ICP.

3.8 Management Support Group Lead

The ~~Facilities Operations &~~and ~~Engineering Division Manager or delegate will respond as the~~ MSG Lead ~~when requested by~~will provide assistance to the BED as requested.

> **NOTE:** *The MSG Lead function and alternates is a Testing Designated Position (TDP) in accordance with HDI Exhibit, PNNL Workplace Substance Abuse Requirements and Protocol.*

The MSG Lead will convene the appropriate staff to fill positions in the MSG as the incident requires. The MSG Lead is also responsible for notifying the PNNL Laboratory Director, other PNNL senior management as appropriate, and PNSO. The MSG's purpose is to support the BED by being a resource for technical information, event mitigation strategies, event termination and Recovery Plans, and other support as directed/requested by the BED/IC. The coordination of support activities to the IC/ICP for a declared emergency on the Hanford Site is managed by the Hanford EOC.

A representative from PNSO has been established to coordinate with the MSG during large events. In smaller events, a PNSO Facility Representative coordinating with the BED will provide information and support to PNSO management regarding actions occurring at the event scene.

3.9 Management Support Group Liaison

The MSG Liaison reports to the ICP to facilitate communications between the BED/IC and the MSG. The MSG Liaison is responsible for the following:

- Establish phone communications with the MSG, as needed, to communicate with the MSG.
- Convey BED/IC requests for MSG support to the MSG.
- Communicate information from the MSG to the BED, IC, or other appropriate BERO members.

3.10 Staging Area Supervisor

The SAS will direct all activities at the building staging area and is responsible for:

- Assisting in personnel accountability by receiving the status of building occupancy from the Zone Wardens and then informing the BED of facility status with regard to personnel, or if help is needed to locate or account for missing personnel.
- Assisting in area evacuation and take cover.
- Assisting with communications.
- Supporting the BED as requested.
- Maintaining a log of their activities or assigning a recorder (also referred to as a "scribe") to do so.
- Completing *EP-SAS-325RPL, RPL Staging Area Supervisor Checklist*.

3.11 Zone Wardens

Zone Wardens provide the results of their accountability sweeps information to the BED via the SAS and assist in additional duties as determined by the BED. To accomplish this function, the Zone Wardens:

- Confirm that assigned zones have been vacated by staff and determine if aid and/or rescue is required.
- Aid those who need help in evacuating the building if it can be done safely.
- Report the occupancy status of the assigned zone and any additional observations to the SAS.
- Assist the SAS as requested.
- Maintain a familiarity with the BEP.
- Become knowledgeable of any staff in assigned zones that may require assistance in an emergency event.

NOTE: *The function of the Zone Warden is to assist staff in evacuating the facility and reporting the occupancy status to the SAS. The function of Zone Wardens does not include search and rescue.*

Zone Wardens should not enter any location in the facility where there are indications that a hazard may exist. The indications include such things as visible smoke, fire, unusual odors, local alarms, criticality alarms, spilled chemicals, incapacitated personnel, etc.

If a Zone Warden is not in the facility when the evacuation or take cover alarm is initiated, is a significant distance from their assigned zones, or has been isolated from their zone, they should report to the SAS at the staging area that their zone was not swept.

3.12 Facility Operations Specialist

The FOS is responsible for meeting emergency responders at the event scene and providing information on event status and initial actions that are underway. This position will serve under the direction of the BED and coordinate with the HFD or Hanford Patrol Operations Section Chiefs, upon their arrival, and will provide facility expertise to support Operations Section activities. The FOS is responsible for implementing *EP-FOS, Facility Operations Specialist (FOS) Checklist,* and also maintains a log of activities, conversations, and directives given and received.

3.13 Hazard Communicator

The Hazard Communicator is a facility or process knowledgeable individual responsible for communicating data received from the Hazards Assessors to the Uniform Dose Assessment Center ~~(UDAC)~~ for further consequence assessment during DOE-declared emergencies. This position is staffed only during DOE-declared emergencies at the request of the BED/IC. The Hazard Communicator:

- Establishes and maintains an emergency response organization communication line with the ~~UDAC~~Uniform Dose Assessment Center Hazards Communicator to provide incident scene radiological or chemical data as reported by the Hazard Assessors.
- Keeps the IC and BED aware of all transmitted and received information.
- Maintains a log, or assigns a scribe to record all activities, including the date and time information was received or the time when action was taken.
- Responds to requests for information from the ~~UDAC~~Uniform Dose Assessment Center and assures that requests for information are relayed to the Hazards Assessor(s) for response.
- Implements the *EP-HazCom, Hazards Communicator Checklist.*

3.14 Radiological Hazard Assessors

The Radiological Hazards Assessors (RHA) are responsible for coordinating and verifying accomplishment of radiological control functions throughout the event. This position coordinates with the Operations Section Chief at any location and supervises Radiological Protection Technologist (RPT) activities.

The RHA is responsible for implementing the checklist duties for non-declared RCRA emergencies and DOE-declared emergencies, as appropriate. See EP-RHA, *Radiological Hazard Assessors Checklist*. In conjunction with the Chemical Hazard Assessors (CHA~~,~~), this individual will make recommendations for personnel protective equipment (PPE) to the HFD.

3.15 Chemical Hazard Assessors

This position may be staffed by an Industrial Hygienist assigned to support the HFD. The ~~Chemical Hazard Assessors (~~CHA~~)~~ will provide technical expertise in chemical and toxicological hazard identification, evaluation, reactivity, and dispersion modeling to the HFD. The CHA may also serve as a chemical/ decontamination safety officer, if designated by the IC.

The 325RPL CHA initially reports to the ICP for an event briefing and then coordinates with the HFD Operations Section Chief; he/she provides technical support for non-~~-~~radiological hazardous material response. Typically, the 325RPL Industrial Hygienist and the Industrial Hygienist assigned to the HFD, staff this position. In conjunction with the RHA, this individual will recommend PPE to the HFD.

When the CHA is activated to respond to an emergency, *EP-CHA, Chemical Hazard Assessors Checklist.* must be completed.

3.16 Individual Staff Member Responsibilities

- Announces or activates the appropriate alarm, calls the PNNL SOC (375-~~-~~2400), and notifies management upon observing an emergency[16].
- Avoids exposure to harmful and life-threatening conditions.
- During emergencies, if it can be done safely, secure classified documents and electronic storage media (ESM) before leaving Limited Areas (LA). If this cannot be done without endangering yourself: 1) take the classified documents and ESM with you, if time permits; 2) report to the staging area, and; 3) inform the BED and then call 375-2400 to report an incident of security concern.
- If evacuating due to a fire alarm and you are wearing special PPE or anti-contamination clothing, segregate yourself from others at the staging area until surveyed by a RPT.
- Provide the BED with any information to assist in evaluating the emergency condition.
- Remain at the staging area and follow the instructions of the BED and SAS[17].
- Read and understand the Emergency Information Posting (EIP) and BEP.
- Become familiar with the location of the BEP on the 325RPL webpage and HDI Work Control, *Basic Staff Practices*.
- Wear your Emergency Preparedness information card.
- Know where the nearest fire alarm pull box is located.
- Sign into accountability log ~~(paper or electronic).~~.

[16] Section 3.15, Bullet 1: Permit Requirement, Class 1 Modification 09/30/15
[17] Section 3.15, Bullet 6: Permit Requirement, Class 1 Modification 09/30/15

> **NOTE:** *When evacuating the 325RPL Building due to a fire or a criticality alarm, all personnel are required to exit the Radiological Control Area(s) without performing radiological exit surveys. Those personnel shall segregate themselves from others at the staging area until surveyed by RPTs.*

3.17 PNNL Incident Manager

The PNNL Incident Manager (IM) is used during complex events, such as those affecting multiple PNNL-managed facilities and/or extending over multiple days. The PNNL IM will assume responsibility for incident management. This includes managing the overall event on behalf of PNNL, overseeing BEDs, and coordinating with the PNNL MSG. The PNNL IM will most likely be activated by the MSG Lead. When activated to respond to an emergency, EP_IM, *Incident Manager Checklist* must be completed. Primary BEDs will continue to manage operations at their facilities, but the overall incident management and distribution of resources will be the responsibility of the PNNL IM.

3.18 Facility Visitor Responsibilities

The safety of building visitors is the responsibility of the facility host who shall assure that visitors are provided a safe and orderly evacuation. The facility host will report the visitor status to the SAS as soon as is practical after an evacuation. Visitors will sign into the accountability log.

3.19 Supervisors/Manager Responsibilities

Account for all staff members. Report missing or injured staff members to the SAS and if requested, assist the SAS.

3.20 Unique Program Laboratory Expertise

The technical knowledge of specific programs/laboratory activities are usually known by the laboratory occupant or program manager. When applicable, Cognizant Space Managers (CSM), alternate CSMs, and team leads may be contacted in regards to emergencies or off-normal events in assigned laboratories. Hazard Awareness Summaries containing this information are posted throughout the 325RPL Complex.

Rooms 201, 202 and 529 are less than 90-day Radioactive Hazardous Waste Accumulation Areas.

The Treatment, Storage, and Disposal (TSD) areas consist of Rooms 32, 200, 201, 202, 203, 520, 524, 528, 610, 3714 Pad, and portions of Rooms 603 and 604A.

These rooms may contain significant quantities of hazardous waste for short periods of time. This waste can be radioactive, toxic, corrosive, ignitable, reactive, carcinogenic, or environmentally persistent according to the WAC. **[WAC 173-303~~]~~.]**

No one will enter these rooms without permission from one of the individuals whose names are posted on the door.

Wastes stored in these rooms could have significant environmental or health hazards. Incidents involving any of these locations will require hazardous materials expertise by the responders.

3.21 Environment, Safety, and Health Advisor Responsibilities

The Worker Safety and Health Representative will provide guidance for establishing safety requirements for mitigation and recovery actions. This includes coordinating any support needed from other disciplines of the PNNL Environment, Health, Safety, and Security Directorate (i.e., Environmental Compliance Representatives (ECR), Radiological Control, Hygiene, and Field Services Representatives~~ [FSR]).~~. The ECRs and ~~FSRs~~Field Services Representatives conduct activities within specific hazardous waste management activity areas and provide support to the BED in case of an emergency.

The Environmental Support Contact (375-2966) will provide any necessary notifications to regulatory agencies such as the Washington State Department of Ecology and will transmit required written reports to regulatory agencies within 15 days of event termination[18].

3.22 Line Management

The responsibilities of line management include the following activities:

- accounting for staff members
- reporting missing or injured staff members to the SAS
- assisting the SAS if requested
- performing the necessary actions addressed in HDI
- acting as a health advocate for injured/ill staff members
- keeping the BED informed of changes in programmatic activities that could affect an emergency event
- providing or verifying training for staff members
- providing training for unescorted visitors for whom he/she is responsible
- keeping the BED and Zone Wardens informed of staff members who may require assistance in an emergency event
- providing staff, who are residents in the 325RPL or are qualified Fissionable Material Handlers, with a Personal Nuclear Accident Dosimeter.

Line management has the responsibility to assure that each PNNL staff member performing work in or having unescorted access approval into the 325RPL reviews ~~this BEP~~the EIP annually and documents the review with their Training Coordinator.

3.23 New Staff Assigned to 325RPL

All new assignees to the 325RPL facility shall complete initial training within 10 (ten) working days of assignment. All temporary personnel with unescorted access are required to receive this training before beginning work in the 325RPL facility.

[18] Section 3.21~~3.20,~~, Paragraph 2: Permit Requirement, Class 1 Modification 03/31/16

4.0 Implementation of the Building Emergency Procedure (BEP)[19]

The decision to implement the BEP should be made whenever unusual or emergency conditions exist that require the response of facility and/or emergency personnel and the establishment of an ICP.

For events involving dangerous waste, the BED must use the following criteria to determine if an event is subject to the contingency plan implementation and notifications requirements of ~~WACs~~WAC 173~~-~~-303-350 and WAC 173~~-~~-303~~-~~-360:

1. The event involves an unplanned spill, release, fire, or explosion,

   AND

2. a. The unplanned spill or release involves a dangerous waste, or the material involved becomes dangerous waste as a result of the event (e.g., product that is not recoverable),

   OR

2. b. The unplanned fire or explosion occurred at a facility or transportation activity subject to RCRA contingency planning requirements;

   AND

3. The event could pose a threat to human health or the environment.

Based on evaluation of the event, the BED or alternate BED will implement the BEP to the extent necessary to protect human health and/or the environment. The BED has the authority to commit the resources necessary to carry out the actions required by the BEP.

The BED will direct that additional checklists that are identified in the BEP be initiated and completed. When the materials and quantities involved in the incident have been identified, it should be possible to evaluate the magnitude of the hazard.

During an emergency event, the BED will take all reasonable measures to assure that fires, explosions, and releases do not occur, recur, or spread to other dangerous waste in the facility. Measures include stopping processes and operations, collecting and containing released waste, and removing or isolating containers as appropriate.

In any emergency, priority is given to protection of the health and safety of persons in the immediate area. Containment and cleanup are secondary choices. When responding to minor spill events, onsite personnel will generally perform immediate cleanup of minor spill or releases using facility equipment. Remediation of such spills and releases would not normally constitute activation of the BEP. A spill or release of dangerous waste is considered 'minor' if **ALL** of the following are true:

- The spill is either contained, or if outside a secondary containment, is minor in quantity (generally less than 10 gallons of liquid or 100 pounds of solids).
- The composition of the material or waste is known and can be immediately determined from the label, manifest, Safety Data Sheet~~ (SDS),~~, or other records.
- The spill does not threaten the health and safety of building occupants such that an area evacuation is necessary.

[19] Section 4.0~~4.0,~~, Permit Requirement, Class 1 Modification 03/31/16

- Response personnel have appropriate training and equipment to expeditiously remediate the spill or release.

5.0 Facility Hazards

The 325RPL contains both radioactive and hazardous chemicals that pose a potential hazard to the public, adjacent facilities, personnel, programs, and the environment during an emergency. Because the location of hazardous materials and equipment within the facility can change on a frequent basis due to specific research needs, a variety of informational tools have been created and integrated into daily operations. Some of the tools available within the facility are the:

- *Map Information Tool*
- ~~(MIT)~~
- Chemical Management System ~~(CMS)~~
- 325RPL Operating Envelope webpage
- Integrated Operations System (also known commonly as IOPS) which includes the Hazard Awareness Summaries for each hazardous space in the 325RPL Complex.

5.1 Hazardous Materials

The 325RPL Building contains hazardous materials including:

- chemicals exhibiting one or more hazards such as corrosives, oxidizers, flammable solids and liquids, poisons, etc.
- radioactive materials
- hazardous wastes, including listed wastes and waste exhibiting one or more characteristics such as corrosivity, reactivity, ignitability, toxicity, and/or environmental persistence
- mixed wastes (wastes containing both radioactive and hazardous components).

Hazards associated with these materials vary depending on type, quantity, and concentration of the material(s) involved in the incident as well as the type of incident.

During an emergency, the PNNL ~~CMS~~Chemical Management System may be consulted to determine the identity and quantity of hazardous chemicals located in affected areas of the facility. The listing of satellite and 90-day accumulation areas are available on the Integrated Waste Management System (IWMS) which is maintained by the Materials and Waste Operations Organization and IWMS may also be consulted to identify the location and types of wastes (hazardous and mixed) located in the facility. The inventory of waste stored in the 325RPL RCRA permitted unit may be determined by consulting with the Materials and Waste Operations Organization IWMS database.

Arrangements for local response agencies (fire, police, and medical and emergency response teams) are required to assist in pre-emergency planning. These arrangements include familiarization with the properties of dangerous waste handled at the facility and associated hazards. Emergency Preparedness provides these coordination efforts with input from individual BEDs and others, as appropriate.

5.2 Physical (Industrial) Hazards

The 325RPL Building contains industrial hazards such as high-voltage equipment, high-temperature equipment, elevated work areas, and overhead hazards. Refer to the ~~IOPS~~Integrated Operations System Hazard Awareness Summaries that are posted at the entrance to each space for specific details.

5.3 Dangerous Mixed Waste

See Section 5.1 ~~5.1.~~. Refer to the *Map Information Tool*~~MIT~~ to identify the location of any dangerous mixed waste location in a specific room.

5.4 Radioactive Materials

See Section 5.1. Refer to the *Map Information Tool* to identify the location of any dangerous mixed waste location in a specific room.

5.5 Criticality

The 325RPL Building is a Hazard Category 2 non-reactor nuclear facility designed as a multi-purpose research facility. Fissionable materials are stored and used in various lab spaces (Controlled Areas). Limits and controls for mitigating the criticality hazards are described in the posted Criticality Safety Specifications. A fissionable material line manager and fissionable material handler supervisor are assigned responsibility for each controlled area.

PNNL-DSA-325, *Radiochemical Processing Laboratory Documented Safety Analysis* (325RPL's Documented Safety Analysis [DSA]), analyzes various scenarios regarding potential criticality incidents and establishes a Nuclear Criticality Safety Program as a safety management program. The Nuclear Criticality Safety Program evaluates fissionable material handling and storage at the 325RPL and provides engineered features, limits, and administrative controls necessary to assure the possibility of a criticality event remains extremely unlikely.

The criticality safety risk of firefighting within each controlled area is evaluated and areas are posted with appropriate symbols when a limitation on the use of water or other extinguishing agents is warranted. These limitations are also identified within the HFD Pre-incident Plan.

A criticality accident at the 325RPL is a credible event. ~~A CAS~~A Criticality Alarm System is maintained to mitigate the impact of an accidental criticality on facility staff and visitors through rapid notification and an immediate evacuation. The system is tested on a semi-annual basis.

6.0 Potential Emergency Conditions and Appropriate Response

6.1 Explosion/Fire/Fire Alarm[20]

> **NOTE:** *During these events, it is likely that facility integrity may be compromised and that the facility will also experience a concurrent loss of electrical power and/or control of the building ventilation systems. If this is the case, refer to Section 6.2, Hazardous Material/Dangerous or Mixed Waste Spill and Section 6.6, Loss of Electrical Power/Reduced Ventilation for concurrent actions as appropriate.*

If you are involved with, or are in close proximity to an explosion, a fire, or discovery of a fire, or have indication that the fire alarm is sounding, perform the following:

6.1.1 Fire/Explosion

6.1.1.1 Sound the alarm by pulling the fire alarm pull box. See the guidance for the exception to this step below.

Exception to pulling the fire alarm: If a simple and safe action can be taken that will immediately and positively extinguish a small fire (e.g., pulling the plug on a malfunctioning lab instrument, isolating a fuel source such as quickly closing a valve that is immediately at hand, smothering the flame), then pulling the fire alarm pull box is not necessary, and the fire may be extinguished prior to calling the PNNL SOC at 375-2400.

> **NOTE:** *If appropriate, the BED will classify the event using the 325RPL EALs.*

6.1.1.2 Evacuate the building through the nearest exit that can be safely used.

6.1.1.3 Once in a safe location, notify the PNNL SOC at 375-2400 and provide the following information (if known):

- nature and location of the event
- conditions of the event appear to be degrading, (i.e., the fire appears to be escalating or building structures are being compromised)
- your name and callback telephone number
- time event began or was discovered
- number and condition of any injured personnel
- name(s) and amount(s) of any chemical(s) that are involved or may be burning as a result of a fire~~.~~

[20] Section 6.1, Permit Requirement, Class 1 Modification 03/31/16

> **NOTE:** *The fire department can be notified directly by calling ~~(9)~~ 911 or 373-0911 (cell). If the fire department was contacted using the cell option, also call the PNNL SOC at 375-2400 as soon as possible to initiate PNNL management notifications and emergency response.*

6.1.1.4 If time permits, and without putting yourself in jeopardy, you may fight the fire under the following conditions:

- You have directed someone to pull the fire alarm pull box.
- You have verified that someone has called the PNNL SOC at 375-2400, ~~(9)~~ 911, or 373-~~-~~0911 (cell~~)~~).
- You are willing, able, and knowledgeable about the selection of fire extinguisher and its use.

> **NOTE:** *Fire extinguishers equipped with the glove piercing tips are for HFD use only.*

- If the fire is in a hot cell, attempt to smother the fire, if smothering does not work then use the fire extinguishing system, if you are trained to do so.
- If the fire is in a glove box, do not attempt to fight the fire using the gloves. Isolate supply air to the glove box if safe to do so.
- If the fire is small and you know what material is burning, the fire does not involve significant quantities of hazardous materials, and does not present a personnel exposure hazard to smoke or significant heat.

6.1.1.5 If you have chosen to fight the fire, and after the fire is believed to be out, call the PNNL SOC at 375-2400 and inform them of your actions.

- Unless there are significant amounts of smoke or fumes, remain in the proximity of the fire to verify that the fire does not re-~~-~~flash.
- In the event the fire re-~~-~~flashes, perform these actions starting with Step 6.1.1, and do not attempt to fight the fire on your own.

6.1.2 Fire Alarm

> **NOTE:** *If appropriate, the BED will classify the event using the 325RPL EALs.*

6.1.2.1 If time permits, and without placing yourself in jeopardy, perform the following:

- Verify equipment is shutdown or is in a safe configuration.
- Verify nuclear and classified materials are secured.

6.1.2.2 Zone Wardens perform an accountability sweep of their assigned areas.

6.1.2.3 Evacuate the building through the nearest exit that can safely be used.

6.1.2.4 Assemble at staging area located at the lower south parking lot, south end of Lane #9.

- Zone Wardens report the status of accountability sweeps to the SAS.

- If classified materials (documents, ESM, test materials, etc.) are removed from the LA or left unsecured within the LA:
- Inform the SAS that classified material has been left in an unsecured condition or has been removed from the LA.
- Call the PNNL SOC at 375-2400 and report the details surrounding the classified materials security event.
- The SAS shall provide information to the BED concerning the classified material.
  - Personnel who are wearing PPE clothing or are suspected of being contaminated shall be segregated from other building occupants and shall be surveyed by radiological control personnel. PPE will be discarded as directed by the RPT.
  - Zone Wardens and all staff are to remain at the staging area and follow the instructions of the BED.

6.2 Hazardous Material/Dangerous or Mixed Waste Spill[21]

NOTE: *If appropriate, the BED will classify the event using the 325RPL EALs.*

6.2.1 Minor Spills

For minor spills/releases that are relatively small in size, perform the following.

NOTE: *A spill or release of dangerous waste is considered "minor" if ALL of the following are true. If not, refer to Section 6.2.2~~6.2.2.~~.*

- The spill/release either is contained or, if outside of a secondary containment, is minor in quantity (generally less than 10 gallons of liquid or 100 pounds of solids).
- The composition of the material or waste is known and can be immediately determined from the label, manifest, ~~SDS~~Safety Data Sheet, or other records.
- The spill/release does not threaten the health and safety of building occupants such that a building evacuation is necessary.
- Response personnel have appropriate training and equipment to expeditiously remediate the spill or release.

[21] Section 6.2, Permit Requirement, Class 1 Modification 03/31/16

6.2.1.1 Move personnel away from the substance.

6.2.1.2 Notify nearby personnel of the emergency.

6.2.1.3 Prevent personnel exposure by restricting access to the spill area by setting up barricades, closing doors, etc.

6.2.1.4 Notify the PNNL SOC at 375-2400 and provide the following:

- nature and location of the event
- name(s) of chemicals involved, amounts, sources, and known hazards about the chemicals
- if the spill has been contained
- if any material has been released to the environment
- any corrective actions in progress
- name(s) of anyone contaminated or injured in connection with the incident
- other hazards that may or may not be related to the spill
- time incident began or was discovered
- current status of the event (e.g., spill contained or not contained)
- name, location, and callback telephone number of person reporting the incident.

6.2.1.5 Notify the BED, CSM, and the Safety and Health Representative.

6.2.1.6 Take steps to contain the spill/release **IF**, *and only* **IF**:

- The identity of the substance *is known*.
- Hazards of the substance are known (flammable, toxic, radioactive, corrosive material) and can either be controlled or they do not present an immediate threat.
- Appropriate PPE and control/cleanup supplies are readily available.
- The individual(s) performing the task have had training related to spill/leak control and can safely perform the action(s) without assistance, or assistance is readily available from other trained personnel.

6.2.1.7 Steps to contain the spill/release may include, as appropriate:

- Build a containment of absorbent materials and restrict access to the affected area.
- Tighten closures, tip the container to stop the leak, use plugging, or patching materials or over packing.
- Perform initial cleanup of the spill area by transferring contents to appropriate non-leaking containers using the appropriate procedures and tools.

6.2.2 For a Major Spill/Release, or Tank Spills, Perform the Following Actions.

NOTE: *If appropriate, the BED will classify the event using the 325RPL EALs.*

6.2.2.1 If the spill/release threatens the health and safety of building occupants such that a building evacuation is necessary, initiate a building evacuation by pulling the fire alarm. If a building evacuation is not necessary, continue at Section 6.2.2.2.

- Assemble at the staging area located at the lower south parking lot, south end of Lane #9.
- Zone Wardens report to the SAS.
- If classified materials (e.g., documents, ESM, test materials) are removed from the LA or left unsecured within the LA:
  - Inform the SAS that classified material has been left in an unsecured condition or has been removed from a LA.
  - Call the PNNL SOC at 375-2400 and report the details surrounding the classified materials security event.
  - SAS shall provide information to the BED concerning the classified material.
- Personnel who are wearing PPE clothing or are suspected of being contaminated shall be segregated from other building occupants and shall be surveyed by radiological control personnel. PPE will be discarded as directed by the RPT.
- Zone Wardens and all staff are to remain at the staging area and follow the instructions of the BED.

6.2.2.2 Move personnel away from the substance.

6.2.2.3 Notify nearby personnel of the emergency.

6.2.2.4 Notify the PNNL SOC at 375-2400 and provide the following.

- name, location, and callback telephone number of person reporting the incident
- name(s) of chemical(s) involved and amount(s) involved in the incident
- location of incident (identify as closely as possible and include information about multiple building numbers)
- time incident began or was discovered
- where the materials involved are going or might go, such as into secondary containment, under doors, through air ducts, etc.
- source and cause, if known
- name(s) of anyone contaminated or injured in connection with the incident
- any corrective actions in progress
- anyone else who the discoverer has contacted

- any known hazards
- location and time the chemical condition or spill occurred
- if any material was released to the environment (e.g., to a stack or a sewer system)
- the status of the situation.

6.2.2.5 Prevent personnel exposure (e.g., set up barricades).

6.2.2.6 Contact the CSM.

6.2.2.7 Notify the Safety and Health Representative.

6.2.2.8 Take steps to contain the spill **ONLY** if **ALL** the following exist.

- identity of the substance is known
- hazards of the substance are known (flammable, toxic, radioactive, corrosive material) and can either be controlled or they do not present an immediate threat
- appropriate protective equipment and control/cleanup supplies are readily available
- individual(s) performing the task have had training related to spill/leak control and can safely perform the action(s) without assistance, or assistance is readily available from other trained personnel.

6.2.2.9 Initiate actions to mitigate a tank spill/leak using trained personnel:

- Stop the source of the leak if possible (shutting valves, turning off pumps, etc.).
- Prevent further additions of liquid to the tank.
- Visually inspect the tank system to determine the source of the leak.
- Remove as much of the liquid from the tank as is necessary to prevent further leakage within 24 hours or the earliest practicable time.
- Remove any leakage contained in a secondary containment within 24 hours, or as soon as possible.
- Prevent any further leakage or migration of the leak to soils or surface waters.

6.2.2.10 Notify the BED, the CSM, and the Safety and Health Representative of any pertinent information that you may have.

- Discoverer of the spill will provide a synopsis of the event and the actions taken to the BED, CSM, and the Safety and Health Representative.
- BED will direct spill event mitigation activities upon completion of the event briefing.

6.2.3 For Events that Involve Transportation and/or Damaged Packaging of Hazardous Material or Dangerous Waste that Arrives at the 325RPL:

6.2.3.1 **DO NOT** move the shipment.

6.2.3.2 Notify the BED, CSM, and the Safety and Health Representative.

- The receiver of the shipment or discoverer of the damaged package will provide a synopsis of the situation and the actions taken, if any, to the BED, CSM, and the Safety and Health Representative.

6.2.3.3 The BED will evaluate the event and initiate appropriate actions for minor events/spills per Section 6.2.1 or Section 6.2.2 as appropriate.

- Treat any release from the package as a hazardous material spill and perform response actions as appropriate.

6.3 Unusual, Irritating or Strong Odors[22]

6.3.1 If an unusual odor is detected and the source is unknown, the type and location of the odor should be reported to the BED and the BED will determine the appropriate actions.

6.3.1.1 If the odor is determined to be potentially dangerous, then:

- Initiate a building evacuation by pulling the fire alarm.
- Assemble at the staging area located at the lower south parking lot, south end of Lane #9.
- Zone Wardens report to the SAS.
- If classified materials (e.g., documents, ESM, test materials) are removed from the LA or left unsecured within the LA:
  - Inform the SAS that classified material has been left in an unsecured condition or has been removed from the LA.
  - Call the PNNL SOC at 375-2400 and report the details surrounding the classified materials security event.
  - SAS shall provide information to the BED concerning the classified material.
- Personnel who are wearing PPE clothing or are suspected of being contaminated shall be segregated from other building occupants and shall be surveyed by radiological control personnel. PPE will be discarded as directed by the RPT.
- Zone Wardens and all staff are to remain at the staging area and must follow the instructions of the BED.

[22] Section 6.3, Permit Requirement, Class 1 Modification 03/31/16

6.4 Potential Radiological Material Release

NOTE 1: *If appropriate, the BED will classify the event using the 325RPL EALs.*

NOTE 2: *The RPT may provide radiological survey data in Becquerel's. A Becquerel is a SI unit of radioactivity equal to one disintegration per second. Conversion to disintegration per minute: Multiply total Becquerel's by 60.*

6.4.1 Area Radiation Monitor

- Stop work.
- Alert personnel in the area.
- Exit the Radiologically Controlled Area (RCA) that is being monitored by the Area Radiation Monitor.
- Notify the RPT and the BED.
- Notify the PNNL SOC at 375-2400.

6.4.2 Continuous Air Monitor or ALPHA Sentry Continuous Air Monitor

- Stop work.
- Alert personnel in the area.
- Exit the area being monitored by the Continuous Air Monitor ~~(CAM)~~ and move into a separate air space.
- Notify the RPT and the BED.
- Notify the PNNL SOC at 375-2400.

6.4.3 Glove Box Differential Pressure Alarm

- Stop work.
- Alert personnel in the area.
- Exit the immediate area.
- Notify the RPT and the BED.
- Notify the PNNL SOC at 375-2400.

6.4.4 Hot Cell Differential Pressure Alarm

- Stop work.
- Alert personnel in the area.
- Exit the immediate area.
- Notify the RPT and the BED.
- Notify the PNNL SOC at 375-2400.

6.4.5 Stack Monitor Alarm

- Alert RPT (stack qualified) and BM.
- Stop work associated with release.
- Notify Effluent Management.
- Notify PNNL SOC at 375-2400.
- Notify BED, if not the BM.

6.5 Criticality and Criticality Safety Limit Violations

6.5.1 In the Event of a Potential Criticality Safety Limit Violation, Perform the Following.

The staff member discovering an actual or potential criticality safety limit violation shall follow the steps below (also described in the operating documents).

- Stop work immediately in the area without making any changes to present conditions.
- Ensure that any fissionable materials or other equipment and materials close enough to interact with fissionable materials are not moved or disturbed.
- Immediately notify the BM. If not available, call the PNNL SOC at 375-2400 and state the problem.

6.5.1.1 Upon notification, the BM shall:

- Call the PNNL SOC at 375-2400 and state the problem.
- Notify the Fissionable Material Line Manager and supervisor for the controlled area.
- Contact the Nuclear Criticality Safety Program Manager 308-2946 or Nuclear Safety and Facility Authorization Manager 947-2344 to obtain nuclear criticality safety program staff support.

6.5.1.2 Upon notification, the Fissionable Material Line Manager shall:

- Ensure that all work activities in the affected area are stopped.
- Post warning signs at appropriate locations requiring permission from the Fissionable Material Line Manager to enter the area.

6.5.1.3 Upon notification, the Nuclear Criticality Safety Program Manager shall:

- Confirm whether a limit violation exists.
- Determine if a second contingency still provides for prevention of criticality or other danger if limit has been violated.

6.5.1.4 Nuclear criticality safety ~~limit~~ violations are identified as a loss of ~~process-condition control~~documented controls in the *Event Classifiers Procedure*. The BM

shall initiate the associated reporting, critique, and corrective action process defined in the HDI Workflow, *Report an Event or Occurrence.*

6.5.1.5 The Nuclear Criticality Safety Program Manager will assist the BM in developing a Recovery Plan based on a thorough review of the situation and potential hazards associated with the violation.

6.5.2 In the Event of a Criticality Alarm, Perform the Following~~.~~

> **NOTE 1:** *If appropriate, the BED will classify the event using the 325RPL EALs.*
>
> **NOTE 2:** *Administrative Controls are in place to restrict movement of additional fissionable material in the HLRF hot cells. The controls prevent a criticality event in the HLRF hot cells. The controls address the concern that a criticality within the HLRF hot cells would not be detected with the Criticality Detection System.*

6.5.2.1 Leave the building immediately (walk with purpose) through the closest exit, DO NOT stop for a survey and ~~run~~get at least ~~100~~ 15 feet ~~away~~of separation from the facility. Maintain a minimum of 15 feet distance during relocation to the primary staging area.

6.5.2.2 Zone Wardens are also directed to leave the building immediately without performing accountability sweeps of their zones.

> **NOTE:** ~~*Obstacles located within 100 feet of the building (e.g., fences, walls, trenches) may prevent running directly away from the building for 100 feet.*~~ *Choose a path around ~~these~~ barriers that will maximize your distance from the building~~.~~ but maintain at least 15 feet of separation from the facility. When past the obstacle, maintain the distance from the building and continue ~~directly away from the building until you are at least 100 feet from the building.~~ to the primary staging area. See Attachments ~~1 – 3, Emergency Equipment & Evacuation Routes~~7 and 8, Staging Area Map and Alternate Staging Areas for suggested routes ~~to the 325RPL staging area.~~.*

6.5.2.3 Proceed to the staging area along a path that does not take you closer to the building.

6.5.2.4 Assemble at the staging area located at the lower south parking lot, south end of Lane #9. Consider moving to the alternate staging area (350 Building).

- Initiate RCP-8.1.02, Quick Sort Survey of Personnel.
- Any positive quick sort must immediately be reported to the BED.
- Zone Wardens report to the SAS.
- If classified materials (e.g., documents, ESM, test materials) are removed from the LA or left unsecured within the LA~~:~~.

- Inform the SAS that classified material has been left in an unsecured condition or has been removed from the LA.
- Call the PNNL SOC at 375-2400 and report the details surrounding the classified materials security event.
- SAS shall provide information to the BED concerning the classified material.
- Personnel who are wearing PPE clothing or are suspected of being contaminated shall be segregated from other building occupants and shall be surveyed by radiological control personnel. PPE will be discarded as directed by the RPT.
- Determine the radiation dose levels at the staging area and in the evacuated area following a criticality accident.
- Dose rates and report findings shall be reported to the BED.
- Zone Wardens and all staff are to remain at the staging area and follow the instructions of the BED.
- Notify PNNL first responders, supporting the Hanford Fire Department, to set their Electronic Personal Dosimeters to 3 rem/hour rate in order to keep them far enough away from the criticality event location and to limit dose from a pulse.

6.5.2.5 Consider the following to support recovery plan and/or actions.

- ~~Retrieve Fixed Nuclear Accident Dosimeters in order to reconstruct the dose of the accident.~~
- Responders wear full respirators or supplied air system to limit inhalation dose.
- ~~Provide shortest route for retrieval of Fixed Nuclear Accident Dosimeters.~~
- Electronic Personal Dosimeters should be set at the normal level of 100 mrem/hr total.
- Provide shortest route for retrieval of Fixed Nuclear Accident Dosimeters.
- Retrieve Fixed Nuclear Accident Dosimeters in order to reconstruct the dose of the accident.
- If Fixed Nuclear Accident Dosimeters are not retrievable, chemical reagents can be used.

6.6 Loss of Electrical Power/Reduced Ventilation

6.6.1 In the Event of a Loss of or a Significant Interruption to Building Electrical Power AND/OR a Reduction in Ventilation Flow, Perform the Following~~:~~

6.6.1.1 Place laboratory or room in safe condition per the following:

- Verify fume hoods and sashes are closed.
- Verify equipment is shutdown.
- Verify nuclear material(s) are secure.

- Verify that classified materials are secure.
- Verify all hazardous materials are secure.
- Verify that all equipment and heat generating devices inside of laboratory gloveboxes and inside of hot cells are shut down.

6.6.1.2 If the building electrical power returns and/or standby power is still available:

- assemble in the lunchroom.
- if classified materials (e.g., documents, ESM, test materials) are removed from the LA or left unsecured within the LA:
  - Inform the SAS that classified material has been left in an unsecured condition or has been removed from the LA.
  - Call the PNNL SOC at 375-2400 and report the details surrounding the classified materials security event.
  - SAS *shall* provide information to the BED concerning the classified material.
    a. Personnel exiting the Radiological Buffer Areas ~~(RBA)~~ are expected to do so without surveying through the personnel contamination monitor (PCM).
    b. Personnel who are wearing PPE clothing or are suspected of being contaminated shall be segregated from other building occupants and shall be surveyed by radiological control personnel. PPE will be discarded as directed by the RPT.
    c. Zone Wardens for Zones 2 and 8 are requested to activate the flashing red warning lights.
    d. Zone Wardens and all staff are to remain at the lunchroom and follow the instructions of the BED.
    e. Radiological surveys of the facility shall be performed prior to re-entry.

6.7 Natural Phenomena Events

NOTE: *If appropriate, the BED will classify the event using the RPL EALs.*

The natural phenomena events that are considered as having a probability of occurring and are addressed in this procedure are seismic event/earthquake, volcanic eruption/ash fall, high wind/tornado, flood, and range fire.

If these events were to occur, Hanford ~~TNS~~Telephone Notification System messages will most likely be sent before, during, or immediately following the event. Regardless of the receipt of a phone message, the BED will direct activities within the facility in accordance with this procedure and provided by phone messages as appropriate.

Should it become necessary to evacuate the facility, the BED will report the evacuation to the PNNL SOC at 375-2400 and the EOC Shift Office at 376-2900.

6.8 Bomb Threats/Suspicious Objects

NOTE: *If appropriate, the BED will classify the event using the RPL EALs.*

6.8.1 If a Suspicious Object is Discovered, or the Placement of Such an Object is Observed, Perform the Following Actions~~.~~

6.8.1.1 Do not move, open, or otherwise disturb any suspicious objects.

6.8.1.2 Notify the PNNL SOC at 375-2400 and the RPL BED using office telephones only.

6.8.1.3 Evacuate the facility. DO NOT USE THE FIRE ALARM PULL BOX TO INITIATE THE EVACUATION as frequencies can detonate devices.

- Warn others in the immediate vicinity.
- Leave the building immediately via the closest exit.
- Zone Wardens are also directed to LEAVE the building immediately without performing accountability sweeps of their zones.

6.8.1.4 Use of cellular phones, radios, or other radio frequency generating equipment within 100 feet of the 325RPL is prohibited.

6.8.1.5 Assemble at the staging area located at the lower south parking lot, south end of Lane #9.

- Zone Wardens report to the SAS.
- If classified materials (e.g., documents, ESM, test materials) are removed from the LA or left unsecured within the LA:
  - Inform the SAS that classified material has been left in an unsecured condition or has been removed from a LA.
  - Call the PNNL SOC at 375-2400 and report the details surrounding the classified materials security event.
  - SAS shall provide information to the BED concerning the classified material.
- Personnel who are wearing PPE clothing or are suspected of being contaminated shall be segregated from other building occupants and shall be surveyed by radiological control personnel. PPE will be discarded as directed by the RPT.
- Zone Wardens and all staff are to remain at the staging area and follow the instructions of the BED.
- The staging area will be relocated a minimum of 300 feet away from the facility.

6.8.2 If a Telephone Bomb Threat is Received

6.8.2.1 Use the *PNNL Bomb Threat Card* to record the message exactly as dictated and attempt to obtain the following information:

- When will it go off?
- Where is it is located?
- What does it looks like?

- What kind is it?
- Why was it was placed?
- Who placed it?
- How you know so much about it?
- Where are you calling from?
- What's your name and address?

6.8.2.2 Notify the PNNL SOC at 375-2400 and provide the information given by the caller.

6.8.2.3 Upon completion of the notifications to the PNNL SOC, also notify the BED and provide the information obtained from the caller.

6.8.3 If a Written Bomb Threat is Received~~:~~

6.8.3.1 Notify the PNNL SOC at 375-2400.

6.8.3.2 Provide the written bomb threat to the 325RPL BED who will forward it to the PNNL ~~SME~~Subject Matter Expert Safeguards and Security Management Official.

6.9 Active Shooter in the Building

6.9.1 When Condition is Observed

6.9.1.1 RUN – Immediately try to get out of the facility to a safe location out of immediate sight of the building and call 375-2400.

6.9.1.2 HIDE – If evacuation is not possible or safe, take cover in an office with the door closed and lights off. Lock the door if possible and call 375-2400.

6.9.1.3 FIGHT – If the active shooter has confronted you and evacuation or taking cover is not possible, staff should take whatever actions are necessary to get to safety which may include fighting the intruder or other. This is a last resort step.

6.9.1.4 BED Response:

6.9.1.4.1 Public Announcement (PA) made, if possible, depending on the situation.

~~6.9.1.4.2 Request the Safeguards and Security Representative be notified.~~

6.9.1.5 Do not move any suspicious objects.

~~6.9.1.6 Post warnings, if applicable.~~

~~6.9.1.7~~6.9.1.6Provide emergency responders with appropriate information upon arrival.

~~6.9.1.8~~6.9.1.7Keep staff from entering the affected area.

~~6.9.1.9~~6.9.1.8Classify the event using the 325RPL EALs, if appropriate.

~~6.9.1.10~~6.9.1.9 Activate the MSG by calling 375-2400 and requesting activation.

~~6.9.1.11~~6.9.1.10 Request medical assistance, if necessary.

6.10 Notice of a PNNL Lockdown

6.10.1 When Condition is Observed

6.10.1.1 Staff will be notified of a PNNL lockdown over the telephone through the CNS.

6.10.1.2 Immediately get behind a closed door if possible or hidden out of sight.

6.10.1.3 Place projects into safe shutdown mode.

6.10.1.4 Do not allow anyone into the facility.

6.10.1.5 Await further instructions via the CNS.

6.11 Declared Emergency in the 300 Area

6.11.1 Personnel will evacuate the facility or take cover as directed by the BED.

6.11.2 If the declared emergency originates in the 325RPL facility, the BED shall take actions that are in accordance with the BEP and inform and direct other 300 Area contractors and facility owners of the emergency declaration in accordance with their emergency procedures.

7.0 Facility Take Cover — Shutdown of Heating, Ventilation, and Air-Conditioning System

7.1.1 If Outside of the 325RPL, PERFORM the Following.

7.1.1.1 Take cover inside the nearest building.

7.1.1.2 If the building you take cover in is not the 325RPL, attempt to contact your line manager or team lead and have them report your whereabouts to the 325RPL SAS.

7.1.1.3 If unable to contact your management, report to the BERO for the building where you are located so your personal accountability may be made.

7.1.1.4 Follow directions provided by that building's emergency organization or BED.

7.1.2 If You Take Cover Inside the 325RPL, REMAIN INSIDE the 325RPL.

7.1.2.1 Assemble in the lunchroom.

7.1.2.2 Staff should refrain from eating and drinking during a take cover event, if physically able, until an appropriate evaluation of the event can be made.

7.1.2.3 The BED will direct the shutdown of the 325RPL H&V as needed per SOP-325-003, *325 Building Heating, Ventilation and Air Conditioning Emergency Shutdown*.

7.1.2.4 If classified materials (e.g., documents, ESM, test materials) are removed from the LA, or left unsecured within the LA:

- Inform the SAS that classified material has been left in an unsecured condition, has been removed from the LA, and the status/location of the classified material.
- Call the PNNL SOC at 375-2400 and report the details surrounding the classified materials as a security event and provide details as necessary.
- SAS shall provide information to the BED concerning the classified material.

7.1.2.5 Personnel who are wearing PPE clothing or are suspected of being contaminated shall be segregated from other building occupants and shall be surveyed by radiological control personnel. PPE will be discarded as directed by the RPT.

7.1.2.6 Zone Wardens for zones two and eight are requested to activate the flashing red warning lights.

7.1.2.7 Zone Wardens and all staff are to remain in the lunchroom and follow the instructions of the BED.

8.0 Utility Disconnects

Utility disconnects may be necessary under extreme emergency conditions. The 325RPL BED will determine if utility disconnects need to be disconnected/shut. Locations of the utility disconnects or valves are identified below:

8.1 Electrical

The 325RPL Building main electrical control center switchgear is located on the second floor (northwest corner) in Room 904. Extreme caution shall be used if disconnecting this power.

8.2 Potable/Process Water

The internal valves are located in the southwest corner of Room 22 in the basement. The external ground valve, SCW-1-VLV (blue cover, operating handle located in 325RPL Shop) is located outside at the southwest corner of the 325RPL Building.

8.3 Gas Supplies

The P-10 gas distribution system is located at the northeast end of the north gas cylinder dock. Turn cylinders off as directed by the 325RPL BED.

8.4 Steam

The high-pressure steam supply valves are located above the power operator's workstation entry door on the second floor east equipment room. Steam to the 325RPL may also be isolated using valves inside the Johnson Controls-operated 325B boiler house, if access to the 325RPL Building is not possible.

8.5 Air

The main air compressor may be isolated in one of two ways: OPEN the electrical disconnect (S-DIS-074) for the main air compressor or by CLOSING valve CA-186-VLV; both of the components are located adjacent to the main air compressor in the second floor mechanical room. If time permits, the preferred method of shutting down the main air compressor is to press the STOP pushbutton located on the front of the compressor.

8.6 Compressed Air

To remove all sources of compressed air, the standby compressor (located in the northwest corner of the basement) must also be isolated or shutdown in addition to isolating the main air compressor. Isolation of the standby compressor is accomplished by OPENING the electrical S-DIS-073 or CLOSING valve CA-96-VLV; both components are located adjacent to the standby air compressor. If time permits, the preferred method of shutting down the

standby air compressor is to place the control switch to the OFF position; the switch is located on the top of the compressor controller.

8.7 Ventilation

Ventilation Facility Exhaust and supply fan controls are located:

- at the power operator workstation (Room 900)
- Power Operators METASYS work stations in any PNNL facility may be used to secure the 325RPL main supply and exhaust fans as well as a majority of the building heating and ventilation (H&V).
- in the north part of the basement, west of the elevator
- Additional exhaust fan controls are on the starter enclosure for each exhaust fan inside the 325RPL Filter Building.

External shutdown of the main exhaust and supply fans may be accomplished under extreme circumstances by removing both normal and standby electrical power from the building. A more controlled external shutdown of the main exhaust and supply fans is a complicated evolution involving multiple operating locations that must be accomplished in a specific sequence under supervision of 325RPL knowledgeable staff to prevent the risk of loss of building containment due to creation of a positive pressure inside the building.

8.8 Fire Protection Supply Water

Fire Suppression Supply Water Post Indicator Valves (red) for Risers 1 through 5 are located outside the 325RPL Building in the following locations:

- Riser 1 PIV is located at the northwest corner of the 325RPL building
- Riser 2 PIV is located north of the 325RPL
- Riser 3 PIV is located at the southwest corner of the 325RPL building
- Riser 4 PIV is located southeast of the 325RPL-A annex
- Riser 5 PIV is located southeast of the 325RPL-A annex.

8.9 Dry Pipe Outside Screw and Yoke (Riser 6)

The outside screw and yoke ~~(OS&Y)~~ valve for the dry pipe fire suppression system on the north gas cylinder dock is located on the second floor in the east equipment room at the north wall. Suppression water for this system is supplied from Riser 2 and may be isolated external to the 325RPL by shutting the PIV for Riser 2.

8.10 325RPL Ramp Sump Pump

Water runoff down the 325RPL basement truck ramp at the southwest corner of the building is collected in a sump at the bottom of the ramp. The associated sump pump empties the sump as needed to prevent it from overflowing into the 325RPL basement through the roll-up door. The sump pump discharges to the street in front of the 325RPL.

Potentially contaminated fire suppression water runoff from inside the 325RPL basement could also enter this sump and be pumped to the street in front of the building resulting in an unacceptable spread of contamination.

The local disconnect for the sump pump is located inside the south roll-up door on the east side of the door.

8.11 325RPL Decontamination Shower/Sink

A decontamination shower and sink is located in Room 426 with a tempered water supply for use as an emergency decontamination system. The contaminated water is routed to two 250-gallon storage tanks ~~located in Room 94B~~.

The system is designed with the drains directed to one of the two tanks. A high-level alarm activates locally when the selected tank reaches 66 percent volume. The high-level alarm is used to prevent overfilling of the tank. The water supply is manually isolated to allow valve alignment to the second tank for water receipt. The high-high alarm at 75 percent of the tank volume will automatically isolate water to the shower or sink. The tanks have a common overflow for upset conditions (i.e., automatic water isolation fails, improper valve alignment).

9.0 Termination, Incident Recovery, and Restart

9.1 Termination

The IC, in consultation with the BED, will recommend termination of the event when conditions indicate that it is safe to do so. EP_ECF, *Event Closeout Form*, should be completed before any recommendation is made to terminate a declared emergency.

9.2 Recovery

Depending on the circumstances of the event, a recovery team consisting of the IC, 325RPL BED, and appropriate ~~SMEs~~Subject Matter Experts, will develop and recommend a Recovery Plan for restoring the facility to operable status. Emphasis will be placed on the careful cleanup of released material and contaminated debris to minimize further risk to personnel, the public, or the environment while preserving evidence at the event scene. All waste materials generated by the cleanup will be containerized in drums or other appropriate containers and stored in an approved storage area pending characterization and determination of the final treatment/disposal requirements. The Recovery Plan will be reviewed and approved and must meet the requirements of PNNL-MA-110, the *PNNL Emergency Management Plan,* Termination and Recovery.

The BED is responsible for assuring that emergency equipment is clean and fit for its intended use prior to resumption of operations. Equipment used during an incident will be decontaminated (if practicable) or disposed of as spill debris. Decontaminated equipment will be checked for proper operation prior to storage for subsequent use. Consumables and disposed materials will be restocked. Fire extinguishers will be recharged or replaced.

For emergency events involving the TSD or a 90-day accumulation area, the Recovery Plan will include the appropriate notification of the Washington State Department of Ecology and appropriate local authorities of recovery actions taken prior to restart. The operator of the TSD will also provide a written report to the Department of Ecology within 15 days after the

incident or within 30 days after the incident for a release from a tank system to the environment that does not result in an activation of the contingency plan[23].

> **NOTE:** *For classified events recovery planning and activities will be the responsibility of the recovery director assigned at the Hanford EOC.*

9.2.1 Emergency Decontamination Facilities

The 325RPL facility has decontamination capability as discussed in Section 8.11. Radiological control personnel are the only staff that may perform personnel decontamination.

If an evacuation of the 325RPL Building occurs and re-entry is not possible to decontaminate affected personnel, radiological control supervision may use the 3410 Building personnel decontamination facility located in Room 1601. In the event that the affected personnel are injured, they should be transported directly to a hospital. If large group decontamination facilities are requested, request assistance from the HFD Mobile Decontamination Facility.

9.2.2 Emergency Radiological Exposure Guidelines

In extremely rare cases, emergency exposure to radiation may be required to rescue personnel or protect major property. Emergency exposure may be authorized in accordance with the provisions contained in 10 CFR 835, "Occupational Radiation Protection". The dose limits for personnel performing these operations are listed in Table 9.1.

> **NOTE:** *Only RadWorker 2-trained staff is allowed to volunteer for receiving emergency radiological exposures.*

The lens of the eye dose limit should be three times the listed values. The shallow dose limit to the skin of the whole body and the extremities is ten times the listed values.

Table 9.1 - Emergency Dose Limits

Dose Limit (Total Effective Dose Equivalent) in rem	Activity Performed	Conditions
5	All	N/A
10	Protecting major property	Only on a voluntary basis where lower dose limit not practicable
25	Lifesaving or protection of large populations	Only on a voluntary basis where lower dose limit not practicable

[23] Section 9.2, Paragraphs 1, 2, and 3: Permit requirement, Class 1 Modification 03/31/16

> 25	Lifesaving or protection of large populations	Only on a voluntary basis to personnel fully aware of the risk involved

9.3 Restart

In most cases, EP_ECF, *Event Closeout Form*, will be sufficient for supporting recovery from an event and actions needed for resumption of normal operations. For complex events with significant facility damage or a need for incident staffing for more than 48 hours, a Recovery Plan and process will be required. Restart of the facility following complex emergencies will be conducted with a Recovery Plan developed using EPIP-3.0, *Recovery Plan* and led by a Recovery Director identified by the MSG. The Recovery Plan will be developed with support from both the 325RPL Manager and 325RPL BM.

The following documents should be consulted, used as reference, and implemented if needed.

- ~~ADM-~~EPIP-3.0, *Recovery Plan*
- PNNL Guides for Post-Natural Phenomena Hazard Building Inspection
- RPL-PLN-701, *RPL Business Continuity Plan*

For severe damage to the facility due to natural phenomena (e.g., extreme weather conditions, seismic events, wildfires, external flooding) or other causes (e.g., severe fire, physical attack, explosions, events in neighboring facilities), the Recovery Plan shall describe the process for a systems engineering assessment and evaluation of the facility including environmental protection, mission critical and other essential systems (safety significant and equipment important to safety). The purpose of these assessments is to define actions needed to place the facility into a safe configuration within the Safety Basis requirements pending any resumption of operations.

Recovery for events that involve a container storage area within the HWTU, require the container storage and containment system to be evaluated before restart.

If the event involved a tank system leak, repairs must be certified by an independent, qualified, registered, professional engineer.

Before operations are resumed in the facility, all emergency equipment used during the emergency shall be cleaned and restored to usable, operable condition[24].

10.0 Emergency Equipment[25]

Support equipment available to assist in responding to an emergency can be found by referring to DOE/RL 94-02, Section 11.2, and the HFD emergency equipment listing in DOE/RL 94-02, Appendix C.

10.1 Portable Emergency Equipment

None

[24] Section 9.3, Last three paragraphs: Permit Requirement, Class 1 Modification 09/30/15
[25] Section 10, Permit Requirement, Class 1 Modification 03/31/16

10.2 Fire Control Equipment

- Portable Class ABC fire extinguishers are located throughout the facility. Each Class ABC extinguisher is capable of suppressing fires involving ordinary combustible materials, flammable liquids, oils, paints, flammable gases, and fires involving electrical equipment. Class D extinguishers will be located in areas vulnerable to Class D fires if reactive metals are stored there (e.g., dangerous waste storage room). Manual dry chemical fire extinguishers are installed in the Shielded Analytical Laboratory hot cells and are available outside the HLRF A and B hot cells. The fire extinguisher locations are identified on the floor plans (Attachments 1 ~~-~~through 3).
- Portable Class ABC fire extinguishers with piercing tips are located in each lab that contains a glovebox. These extinguishers are for the HFD use only. 325RPL staff have not been trained in their use. The piercing tipped fire extinguisher locations are identified on the floor plans (Attachments 1 ~~–~~through 3).
- 325RPL is equipped with an automatic fire detection, alarm, and suppression system. Five wet pipe and one dry pipe sprinkler system provide automatic fire suppression.
- A Mobile Command Post Vehicle can be obtained from the HFD at 373-2230. The HFD Battalion Commander will approve and dispatch the vehicle.

10.3 Communications Equipment/Warning Systems

- **Fire Alarm Pull Boxes** are located throughout the facility. The primary locations are at all exits of the facility. All locations are shown on the floor plans (Attachments 1-3).
- **Hanford Site Telephone Notification System** ~~**(TNS)**~~ is a component of the Hanford Emergency Notification System and designed to use the existing telephone system to notify individual employees. When the phone is answered, a recorded message will provide event information and inform staff of protective actions they are expected to take.
- **PNNL Communicator Notification System (CNS)** is a system that will allow emergency messages to be communicated quickly to all staff via the PNNL phone system, other subscribed phones (e.g., text or voice call to personal cell phones), and the PNNL email system. Phones at PNNL in offices, conference rooms, labs, and common areas such as lobbies, conference rooms, and lunchrooms are notified by the system. When the phone is answered, a recorded message will provide event information and inform staff of protective actions they are expected to take. This can be activated by having the BM, IM, or MSG Lead call 375-2400.
- A **Criticality Alarm System** ~~(CAS)~~ is present in the building. The system is equipped with neutron-sensitive criticality detectors. The ~~CAS~~Criticality Alarm System alarms in locations where the expected dose from an accidental criticality may exceed 12-rads in free air. The system is tested and maintained in accordance with preventive maintenance procedures.

> **NOTE:** *These systems are not considered emergency equipment and may not be available during all types of emergencies.*

- Other non-emergency communications equipment installed in 325RPL include:
  - public address system~~. (1234~~ (375-3700 on the ~~BM phone~~VOIP phones)
  - public address system in the fire alarm control panel
  - commercial telephone system that may also be used to summon assistance during an emergency
  - hand-held radios provided by the BED.

10.4 Personal Protective Equipment

Safety showers and eyewash units are installed at several locations throughout the facility including waste storage areas. All locations are shown on the floor plans (Attachments 1 through 3).

Personnel protective clothing and respiratory equipment is available in the facility for use during both routine and emergency operations. This equipment includes:

- chemically-resistant suits, aprons, boots, and gloves
- protective glasses
- chemical goggles
- face shields
- full-face respirators with extra cartridges
- radiological clothing.

Kits containing a variety of radiation monitoring instruments, forms, and equipment are available for use in an emergency. PNNL maintains these kits, which contain protective apparel, instruments, and equipment for personnel decontamination and other immediate emergency needs. These supplies and equipment are only adequate to fulfill immediate needs during the initial stages of an emergency.

10.5 Spill Control and Containment Supplies

Spill kits are located throughout the facility and are maintained by the CSMs. Additional spill kit materials can be obtained in Room 527. The following emergency equipment is maintained in (or adjacent to) each of the 90-day hazardous waste accumulation areas. The amount of material maintained varies depending on the amount of waste being accumulated at the individual 90-day area.

- commercially available granular absorbent (e.g. diatomaceous earth)
- absorbent pads
- commercially available acid neutralizer[1] (e.g. granular sodium bicarbonate)
- commercially available caustic neutralizer[2] (e.g. dilute boric acid solution)
- Personal Protective Equipment
  - safety glasses with side shields

- lab coat
- leather gloves
- chemical-resistant gloves (e.g., nitrile)

[1] Required in accumulation areas containing liquid acidic wastes.
[2] Required in accumulation areas containing liquid caustic wastes.

11.0 Evacuation of Persons and Visitors

- 325RPL occupants shall be aware of visitors that may require evacuation. Alternate housing for any staff that is sensitive to excessive hot or cold conditions (temperately disabled) may be required due to emergency response actions.

> **NOTE:** *Alternate staging area – in the event of an extended building evacuation during adverse weather, the 350 Building, or other indoor locations deemed safe, may be used for housing staff at the discretion of the BED*[26].

- Facility and research management provide safety and emergency preparedness briefings for large visitor groups or tours. Individual visitors are briefed by their host.
- In all cases, the safety of building visitors is the responsibility of the host, who shall assure that visitors are provided a safe and orderly evacuation. The host shall ensure that the visitor has signed in and report the visitor status to the appropriate Zone Warden as soon as practical, after the evacuation.

[26] Section 11, Note: Permit Requirement~~: Section 11.0 Note~~, Class 1 Modification 03/31/16

12.0 Emergency Action Levels

12.1 300 Area Protective Actions

300 Area Onsite Protective Actions		
Classification	**Action**	**Implemented By**
Alert	Evacuate or shelter affected facility personnel.	Facility
	Shelter[1] 300 Area and adjacent 600 Area. Initially restrict access at: • Route 4S at Milepost 19 • George Washington Way extension (to 300 Area) intersection with George Washington Way • George Washington Way intersection with Stevens Drive. **NOTE:** *Roadblocks can be relocated based upon consequence assessment upon approval by the IC/SED.*	~~POC~~ Patrol Operations Center (Quick Reaction Checklist)/ EOC Shift Office
Site Area/ General Emergency	Evacuate or shelter affected facility personnel.	Facility
	Shelter[1] 300 Area, HAMMER, Patrol Training Academy, Cold Test Facility, and adjacent 600 Areas. Restrict access at: • Route 4S at Milepost 19 • George Washington Way Extension (to 300 Area) intersection with George Washington Way • Horn Rapids intersection with Stevens Drive.	~~POC~~ Patrol Operations Center (Quick Reaction Checklist)/ EOC Shift Office
	Plan for subsequent 300 Area evacuation as required.	Hanford EOC

[1]*Automatic sheltering for entire areas will not be implemented during a seismic event. If a seismic event occurs, facility management will implement protective actions appropriate for their facility conditions. After a seismic event, site protective actions based upon incident assessment will be identified, planned, and communicated from Incident/Area Command and/or the Hanford EOC.*

300 Area Offsite Protective Actions and Recommendations		
Classification	**Action**	**Implemented By**
Alert	None	N/A
Site Area Emergency	Implement evacuation of Columbia River from White Bluffs Ferry Landing to Leslie Groves Park.	Counties (RLEP 3.3)
General Emergency	Implement evacuation of Columbia River from White Bluffs Ferry Landing to Leslie Groves Park.	Counties (RLEP 3.3)
	Evacuate 2.2-mile radius.	Benton/Franklin Counties

12.2 325RPL Emergency Action Levels

The EAL Tables are published in RLEP 1.0 – Appendix 1–PNNL.325, and can be obtained from the 325RPL BM.

13.0 Attachments

Attachment 1 — Emergency Equipment and Evacuation Routes - 1st Floor

Attachment 2 — Emergency Equipment and Evacuation Routes - 2nd and 3rd Floors

Attachment 3 — Emergency Equipment and Evacuation Routes - Mezzanine and Basement

Attachment 4 — Zone Warden Areas - 1st Floor

Attachment 5 — Zone Warden Areas - 2nd and 3rd Floors

Attachment 6 — Zone Warden Areas - Mezzanine and Basement

Attachment 7 — 325RPL Staging Area Map

Attachment 8 — 325RPL Alternate Staging Area Map

Attachment 9 — Location of 325RPL in the 300 Area

Attachment 1 — Emergency Equipment and Evacuation Routes
—1st Floor [27]

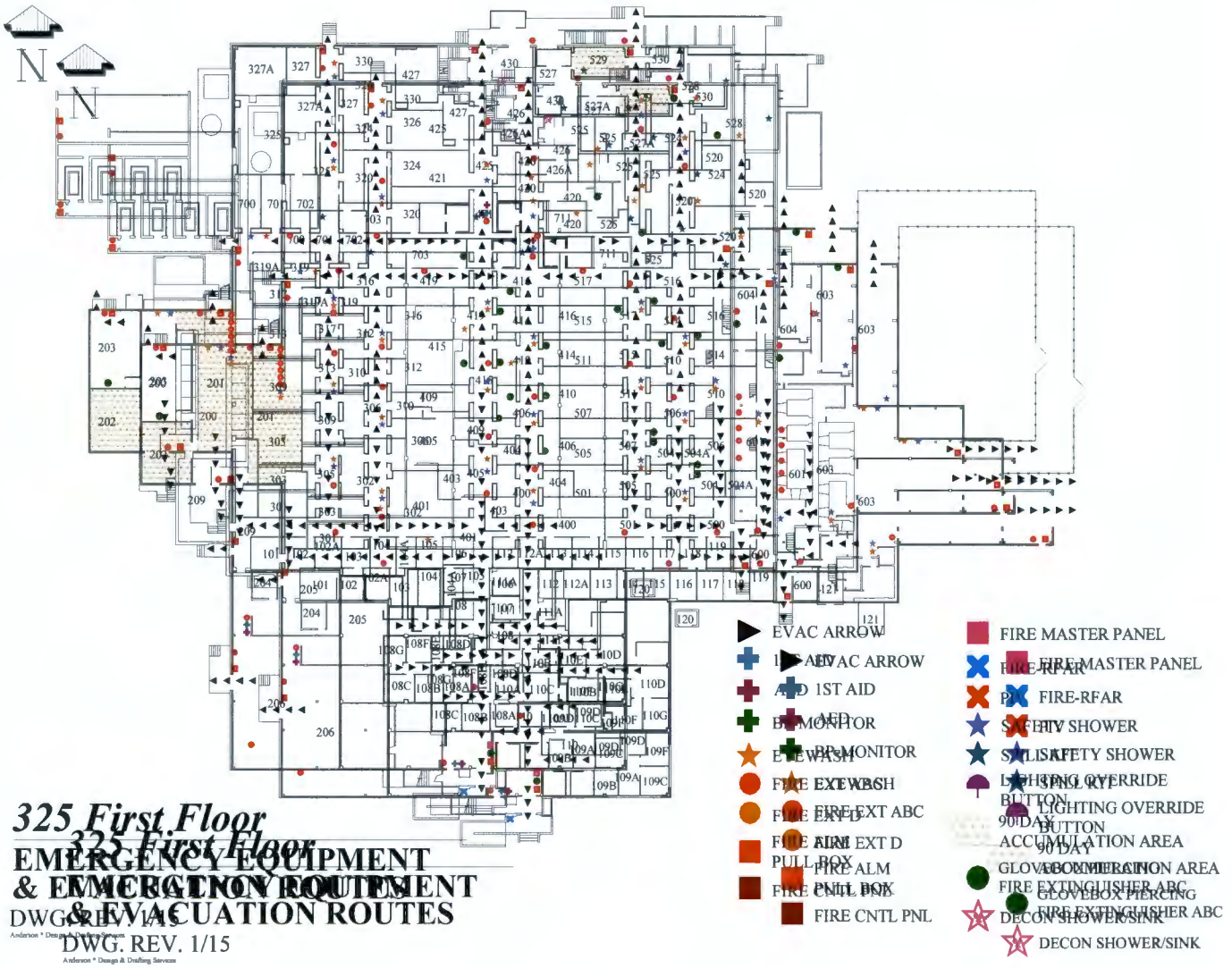

[27] Section 13.0, Attachment 1: Permit Requirement, Class 1 Modification 09/30/15

Attachment 2 — Emergency Equipment and Evacuation Routes
2nd and 3rd Floors[28]

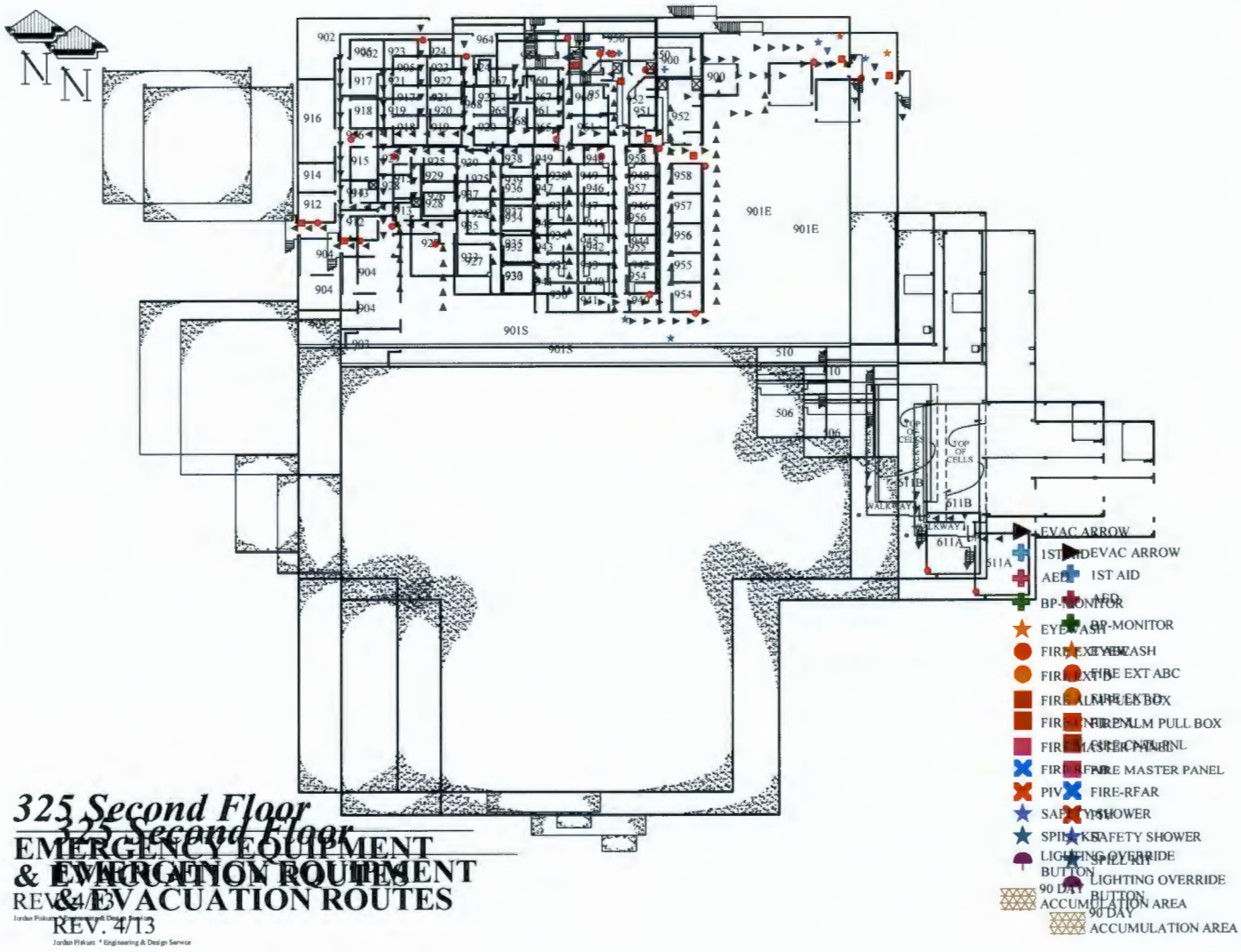

[28] Section 13.0, Attachment 2: Permit Requirement, Class 1 Modification 09/30/15.

Attachment 3 — Emergency Equipment and Evacuation Routes Mezzanine and Basement[29]

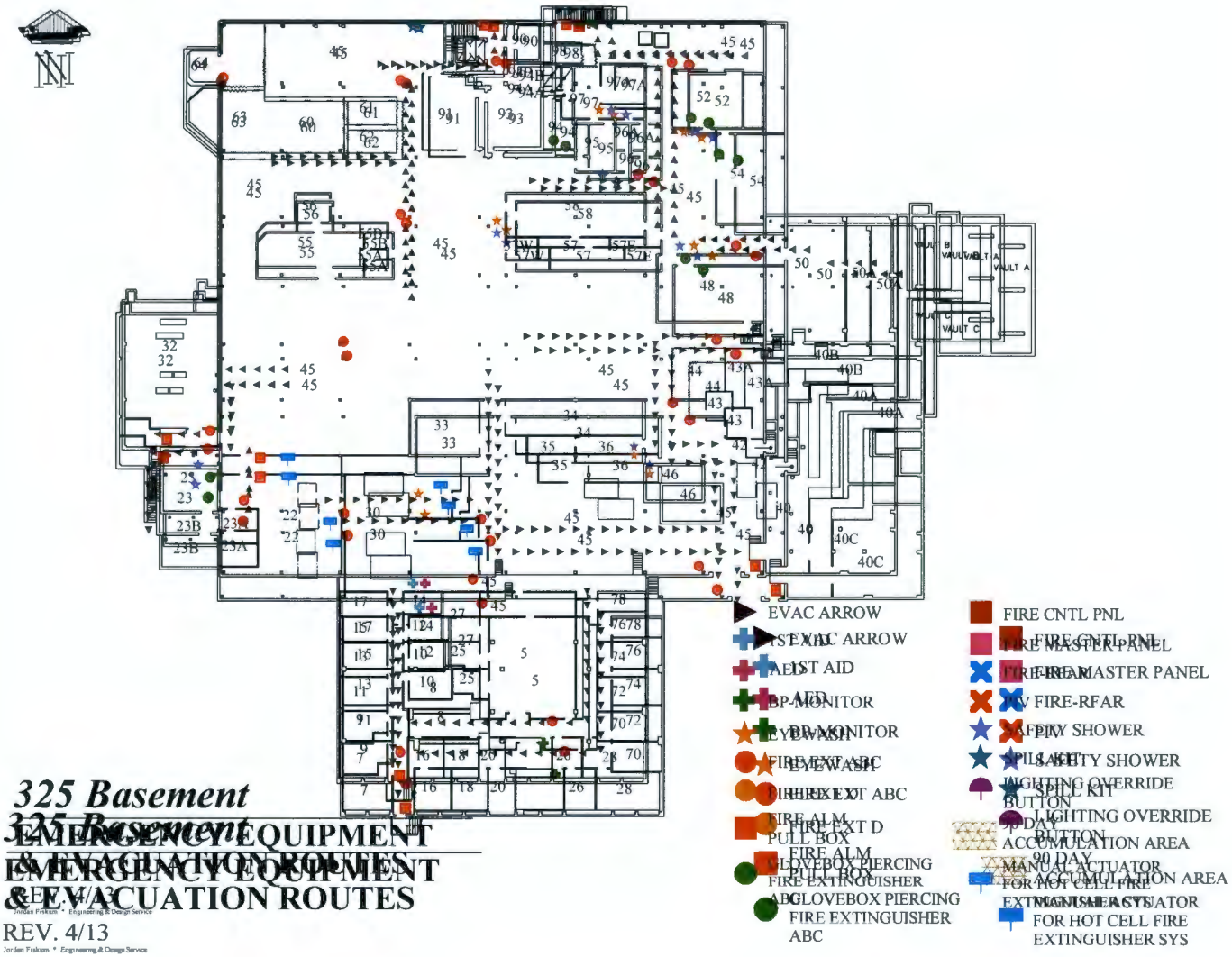

[29] Section 13.0, Attachment 3: Permit Requirement, Class 1 Modification 09/30/15.

Attachment 4 — Zone Warden Areas
1st Floor

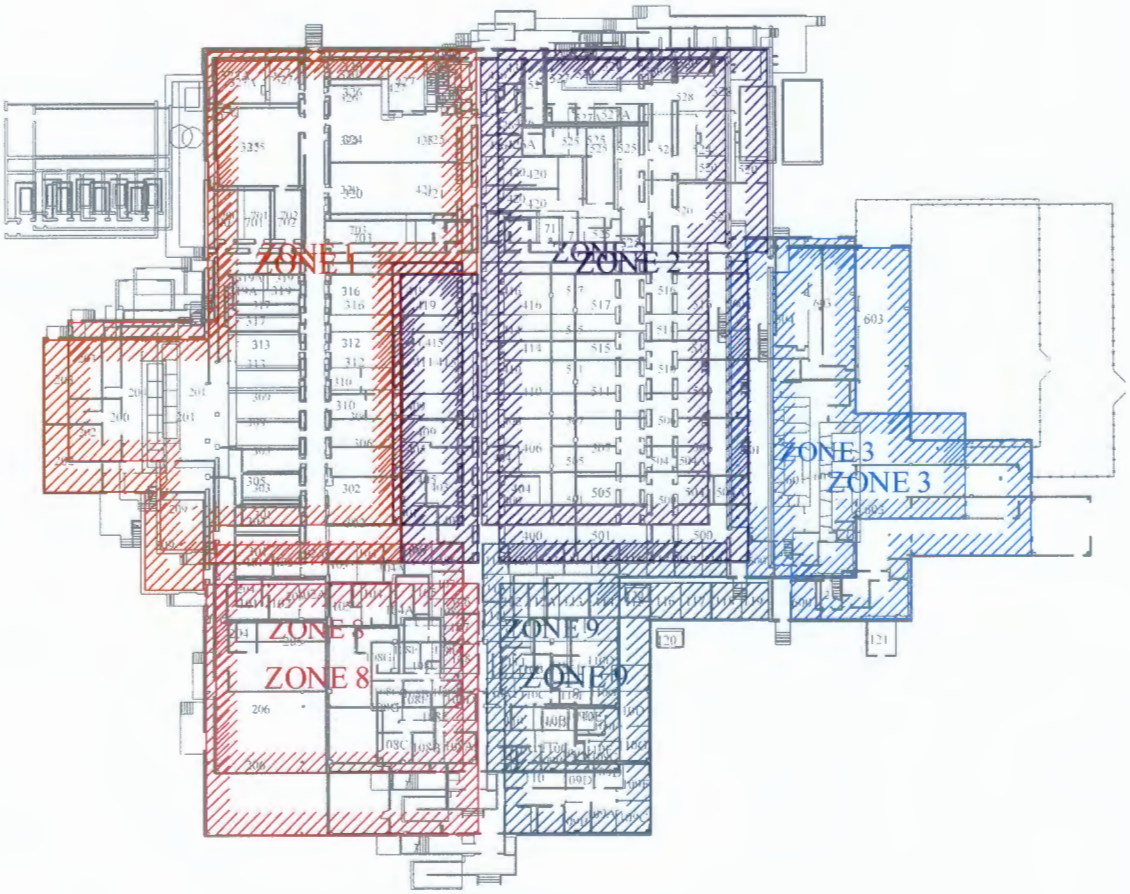

325 First Floor

ZONE WARDEN MAP

REV. 3/14

325 First Floor

ZONE WARDEN MAP

REV. 3/14

Jordan Foltum * Engineering & Design Service

Attachment 5 — Zone Warden Areas
2nd and 3rd Floors

N N

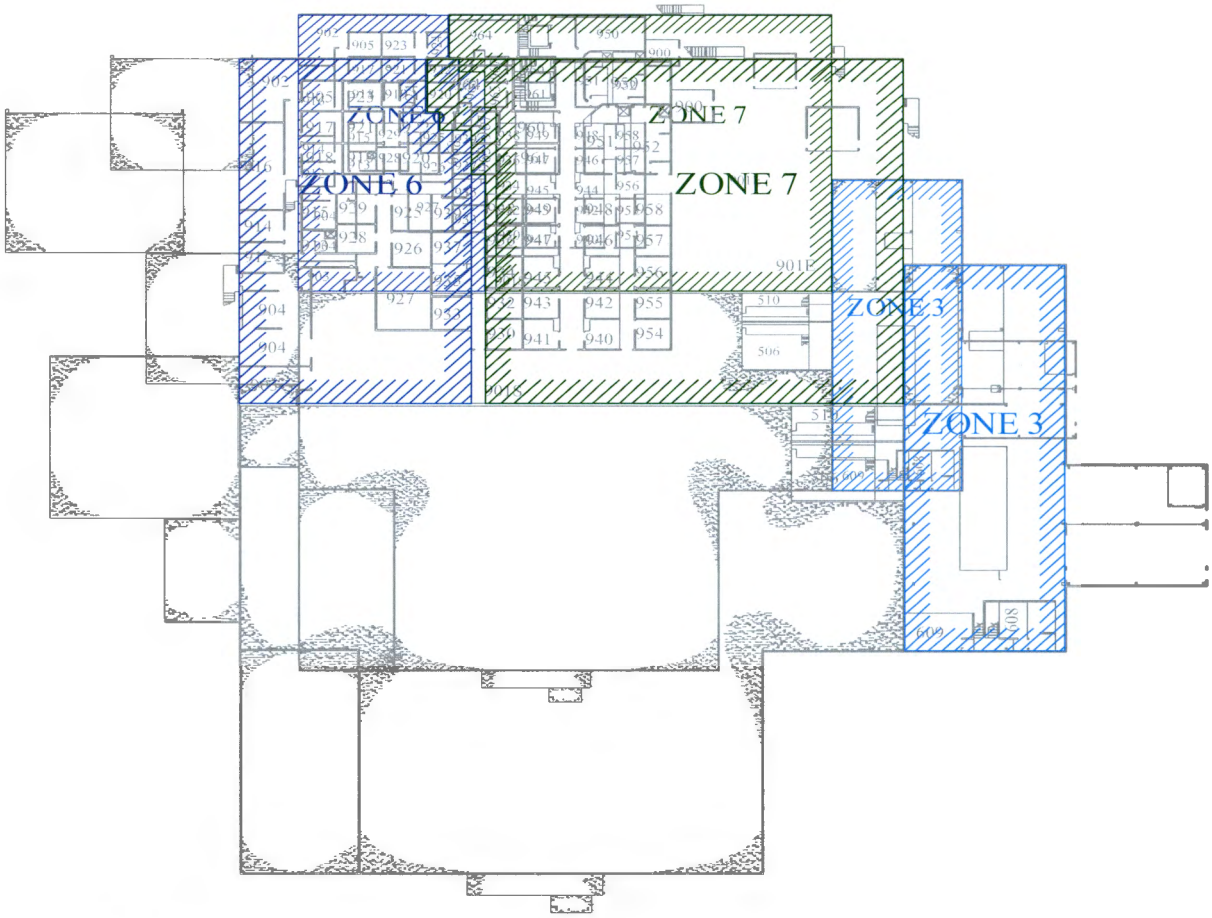

325 Second Floor
ZONE WARDEN MAP
REV. 3/14
Jordan Fiskum * Engineering & Design Service

325 Second Floor
ZONE WARDEN MAP
REV. 3/14
Jordan Fiskum * Engineering & Design Service

Attachment 6 — Zone Warden Areas
~~,~~ Mezzanine and Basement

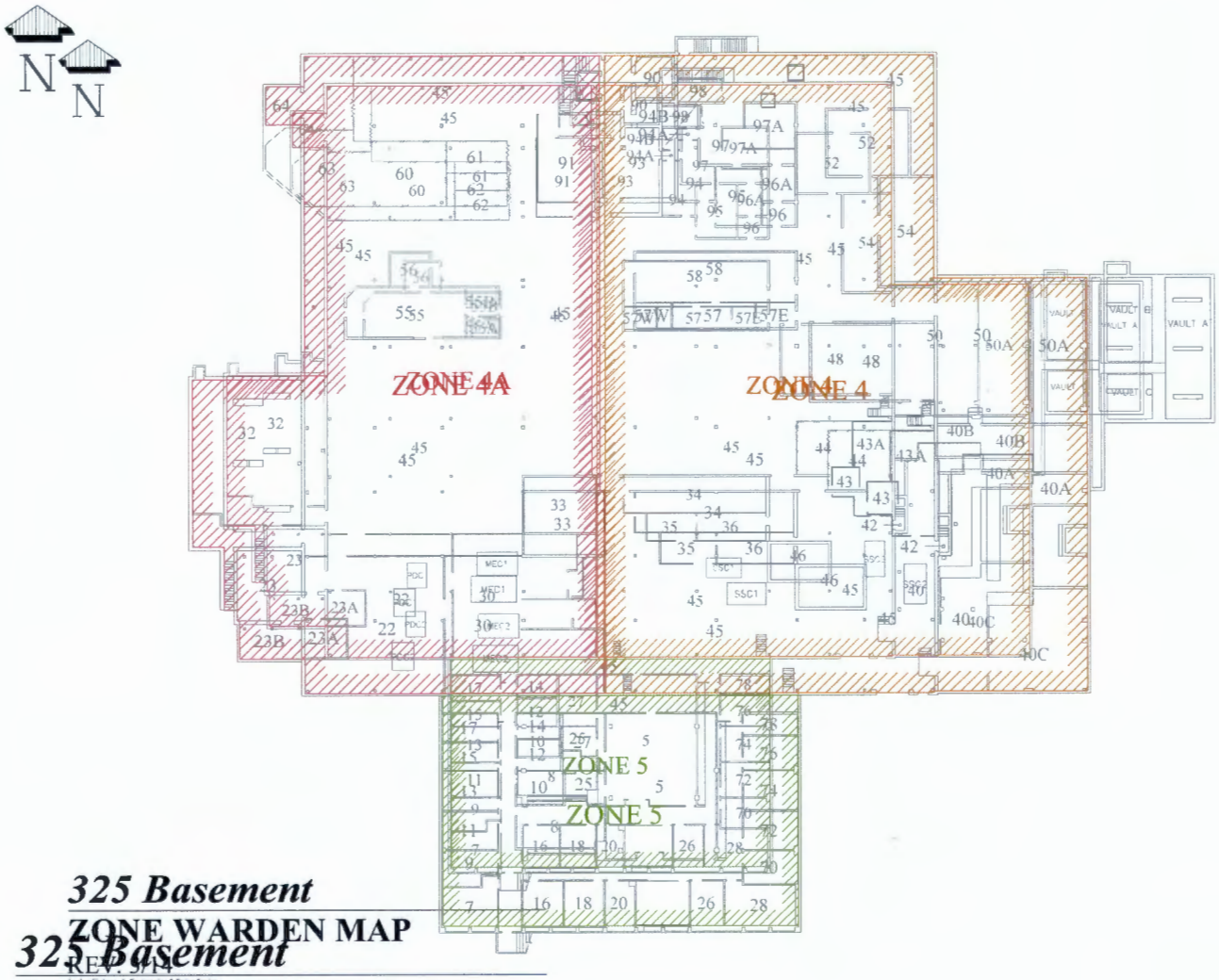

325 Basement

ZONE WARDEN MAP

REV. 3/14

Jordan Fiskum * Engineering & Design Service

325 Basement

ZONE WARDEN MAP

REV. 3/14

Jordan Fiskum * Engineering & Design Service

Attachment 7 — 325RPL Staging Area Map[30]

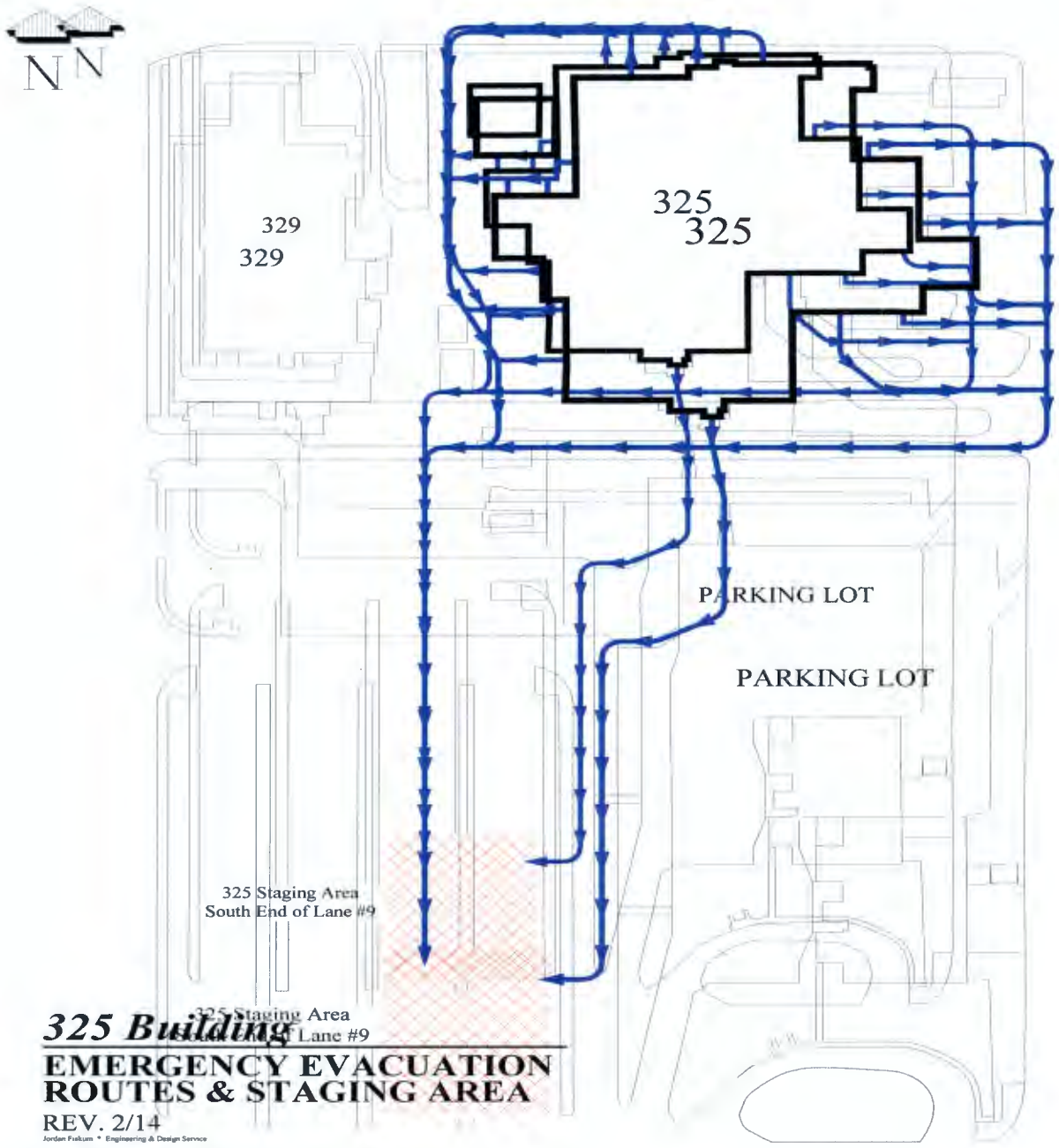

325 Building
EMERGENCY EVACUATION ROUTES & STAGING AREA
REV. 2/14
Jordan Fiskum • Engineering & Design Service

[30] Section 13.0, Attachment 7: Permit Requirement, Class 1 Modification 03/31/16.

Attachment 8 — 325RPL Alternate Staging Area[31]

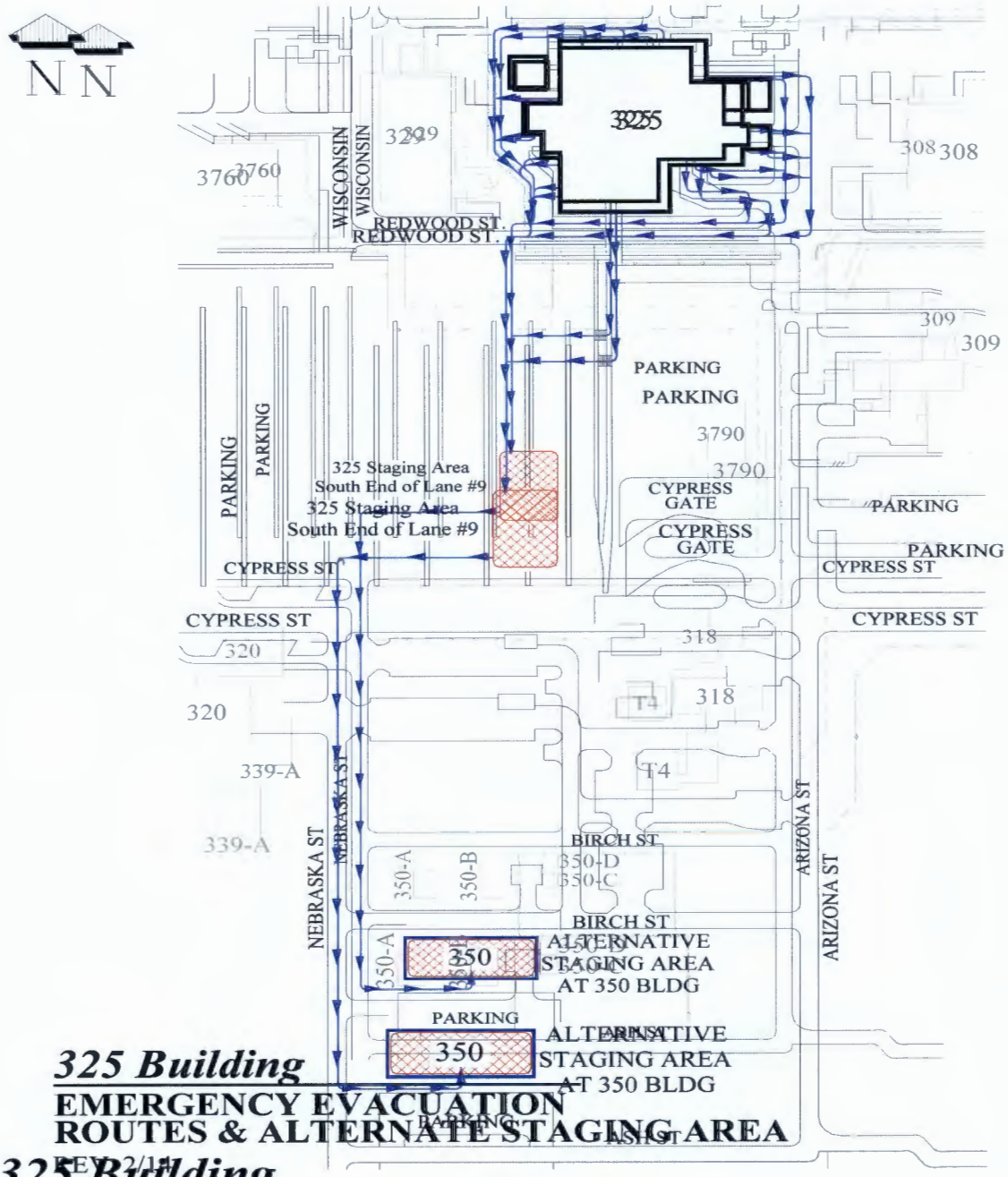

325 Building
EMERGENCY EVACUATION ROUTES & ALTERNATE STAGING AREA
REV. 2/14

[31] Section 13.0, Attachment 8: Permit Requirement, Class 1 Modification 03/31/16.

Attachment 9 — Location of 325RPL in the 300 Area

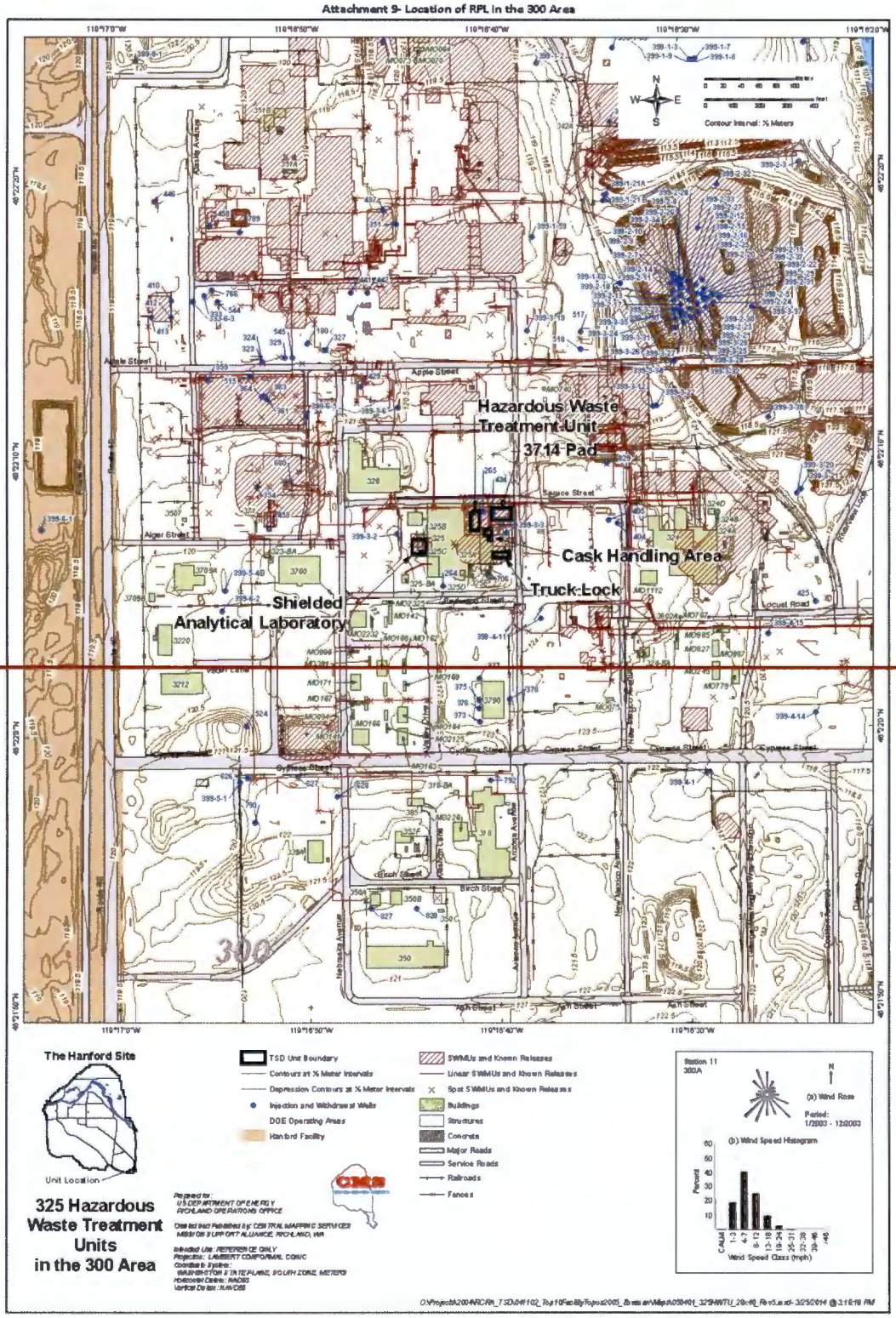

Attachment 9- Location of RPL in the 300 Area

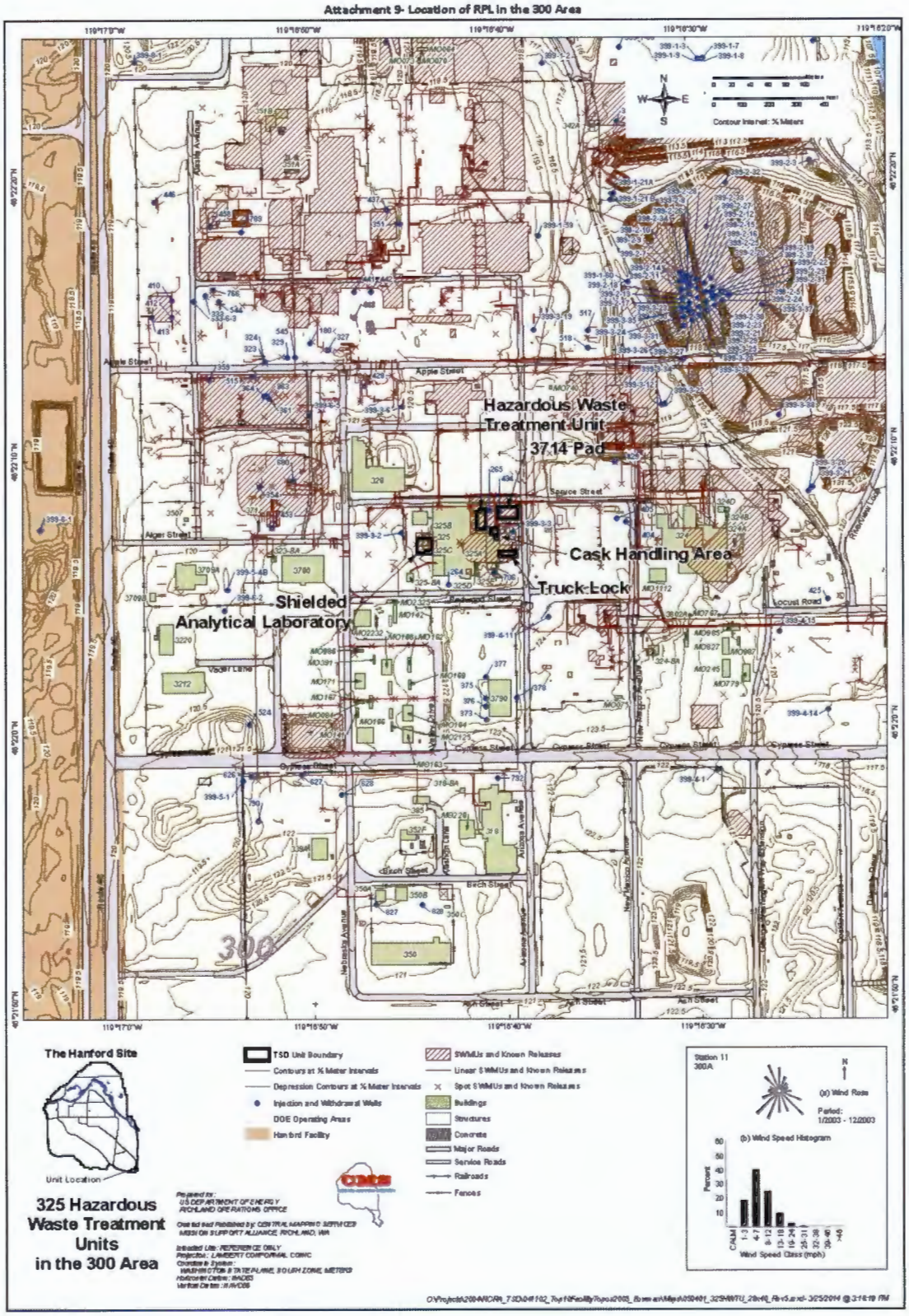

14.0 References and Source Requirements

14.1 References *(as revised)*

ADM-001, *Document Production and Distribution*

ADM-EPIP-2.0, *Management Support Group Procedure*

ADM-EPIP-3.0, *Recovery Plan*

ADM-EPIP-7.0, *PNNL Active Shooter Response Procedure*

HDI Exhibit, *PNNL Workplace Substance Abuse Requirements and Protocol*

HDI Exhibit, *Respond to Spill or Adverse Chemical Condition*

HDI Work Control, *Basic Staff Practices*

HDI Workflow, *Report an Event or Occurrence*

PNNL Guides for Post-Natural Phenomena Hazard Building Inspection

PNNL-DSA-325, *Radiochemical Processing Laboratory Documented Safety Analysis*

PNNL-MA-110, *PNNL Emergency Management Plan*

RCP-8.1.02, *Quick Sort Survey of Personnel*

RPL-PLN-701, *RPL Business Continuity Plan*

SOP-325-003, *325 Building Heating, Ventilation and Air Conditioning Emergency Shutdown*

14.2 Source Requirements *(as amended)*

10 CFR 835, "Occupational Radiation Protection," *Code of Federal Regulations*.

DOE/RL-94-02, *Hanford Emergency Management Plan*, U.S. Department of Energy Richland Operations Office.

DOE-0223, RL Emergency Implementing Procedures—– Applicable to PNNL-Managed Facilities on the Hanford Site, U.S. Department of Energy Richland Office.

RCRA Site-Wide Permit WA7890008967, *Hanford Facility Dangerous Waste Permit*, Resource Conservation and Recovery Act of 1976.

RLEP 1.0 – Appendix 1–PNNL.325.

WAC–173–303–340, "Preparedness and Prevention," *Washington Administrative Code*, Olympia, Washington. http://apps.leg.wa.gov/WAC/default.aspx?cite=173-303-340.

WAC-173-303-350, "Contingency Plan and Emergency Procedures," *Washington Administrative Code*, Olympia, Washington. http://apps.leg.wa.gov/WAC/default.aspx?cite=173-303-350.

WAC-173-303-360, "Emergencies," *Washington Administrative Code*, Olympia, Washington. http://apps.leg.wa.gov/WAC/default.aspx?cite=173-303-360.

14.3 Emergency Preparedness Checklists (as revised)

EP-BED-325RPL, *Building Emergency Director Checklist*

EP-CHA, *Chemical Hazard Assessors Checklist*

EP_ECF, *Event Closeout Form*

EP-FOS, *Facility Operations Specialist (FOS) Checklist*

EP-HazCom, *Hazards Communicator Checklist*

EP-ICPC, *Incident Command Post Communicator Checklist for Hazardous Facilities*

EP_IM, *Incident Manager Checklist*

EP_EmerEvacReport, *PNNL Emergency Evacuation Report Form*

EP-RHA, *Radiological Hazard Assessors Checklist*

EP-SAS-325RPL, *325RPL Staging Area Supervisor Checklist*

Procedure Revision History

Date	Rev. No.	Description
~~4/01/03~~	~~0~~	~~Revised and edited for annual update, including insertion of history page.~~
~~7/30/03~~	~~0~~	~~Made the following name changes and distributed changes to all holders of controlled copies:~~ ~~1. Exhibit 12.1 on page 52 change the MSG Lead 1st and 2nd alternates to L Maples and R Sharp respectively.~~ ~~2. Change the primary warden for Zone 4 to T Haynie, 372-3067~~ ~~3. Change the secondary warden for zone 4A to T Haynie, 372-3067~~ ~~4. In Table 14.a on page 59, change the 90-Day Storage Emergency Contact to RD Bell, Work Phone 376-2321, Cell Phone 521-4505.~~
~~09/03/03~~	~~0~~	~~Replaced L Page with T Eaton on pages 52 and 57.~~
~~09/11/03~~	~~0~~	~~Replaced S Loper with G Varljen as Secondary Zone Warden for Zone 4 and Primary Zone Warden for Zone 4A on pages 56 and 57.~~
~~09/30/03~~	~~0~~	~~Insert Maria Olivarez as 1st Alternate for Assisting Communicator and the ICP Recorder in Exhibit 12.1. (sma)~~
~~11/17/03~~	~~0~~	~~Change William Buyers' cellular telephone number to his current number. (sma)~~
~~11/21/03~~	~~0~~	~~Replaced K Carson with D Winter as Primary Zone Warden and replaced T Eaton with K Carson as Secondary Zone Warden for Zone 7 on page 57. (sma)~~
~~03/30/04~~	~~0~~	~~Annual BEP update (nem-m)~~
~~05/06/04~~	~~0~~	~~Update Evacuation Routes 2nd and 3rd Floors map, correction of room numbers. (sma)~~
~~07/07/04~~	~~0~~	~~Made the following change to section 9.2.1 Emergency Decontamination Facilities: RPL Facility Personnel Decontamination Room is located in Room 606 has only limited decontamination capability (a small sink). Radiological Control Personnel are the only staff that may perform Personnel Decontamination. The decontamination shower in this room is out of service. If an evacuation of the RPL Facility occurs and re-entry is not possible to decontaminate affected personnel, Radiological Control Supervision may use the 329 Building Personnel Decontamination Facility. In the event that affected personnel are injured, they should be transported directly to Kadlec Medical Center. If large group decontamination facilities are required, request assistance from the HFD Mobile Decontamination Facility. (lef)~~
~~08/11/04~~	~~0~~	~~• Replace T Eaton with J Armstrong as ICP Hazards Communicator.~~ ~~• Remove Stan Jones as BED and ICP Communicator Alternates. Also Exhibit 12.2.1.~~ ~~• Remove T Schlotman as the Primary SAS and move the alternates up one step.~~ ~~• Put A Kwiecinski in as Primary ICP recorder and move Bob and Maria to alternates.~~ ~~• Remove A Nicholson and S Nickerson as ICP Chemical Hazards Assessor alternates.~~ ~~• Exhibit 12.2.4, Change "RPL Facility Project Manager" to "Nuclear Work Team Leader" and add Environmental Compliance Representative as J Holland in the Waste Management block.~~ ~~• Replace W Larson as TSD POC (Table 14.a) and replace with R Del Mar. (lef)~~
~~08/25/04~~	~~0~~	~~Fix name spelling of A Kwiecinski as ICP Recorder (lef)~~
~~09/28/04~~	~~0~~	~~Made the following name changes to the RPL BEP and EIPs:~~ ~~Change assisting Communicator to M Olivarez, remove alternates~~ ~~Change ICP Chemical Hazards Assessor to K Sheffield.~~ ~~Change ICP Communicator to H Black-Kania.~~ ~~Change MSG Recorder (1st Alternate) to M Bradshaw.~~

Date	Rev. No.	Description
		~~Zone Warden changes: Zone 4A primary to M Fountain; Zone 6 Secondary J McGuffey Zone 7 Primary G Lumetta, Secondary C Lindenmeier Zone 9 Secondary; P Bredt: Move the North Dock/Cylinder Storage Area from Zone 2 to Zone 7.~~ ~~SAS; Move B Schumacher to 2nd Alternate and put D Coffey as the 1st Alternate.~~ ~~Global update from PNNL SPC or PNNL Single POC to PNNL Operations Center.~~ ~~Change RPL Facilities Project Manager to Nuclear WTL.~~ ~~Change RPL Building Ventilation & Power Operations Supervisor to Utility Operations Work Team Leader.~~
~~• 10/19/04~~	~~• 0~~	~~Removed 43, 45, 63, 517, and 601 from the list of 90-day waste accumulation sites from Section 3.6, Paragraph 2 on the bottom of page 16. Changed 1st Alternate MSG Recorder to L Fuher. (lef)~~
~~11/01/04~~	~~0~~	~~Replace HEHF with new Hanford medical contractor AMH. Update ICP Hazards Assessor 1 T Haynie, 2 K Sheffield (lef)~~
~~03/21/05~~	~~1~~17	~~2005 Annual Update. Changes include:~~ ~~• Standardized appearance of the word AH-OO-GAH throughout the BEP.~~ ~~• Section 2, added Acronyms section.~~ ~~• Section 3.1.1, added information on preservation of evidence to BED responsibilities. Added TDP requirement to BED position responsibilities.~~ • Removed AD Haller from concurrence and added HT Tilden. • Changed title to Materials and Waste Management Manager. • Changed hazards on coversheet to "See Section 5.0, Facility Hazards" • Updated Nuclear Criticality Actions in the table contained in Section 1.5 to read, "Leave the building immediately (walk with purpose) through the closest exit, do NOT stop for a survey and get at least 15 feet of separation from the facility. Maintain a minimum of 15 feet distance during relocation to the primary staging area." • Deleted Power Operator Office from Section 2.1 for distribution of BEP. • Updated information on personnel and phone numbers in the table in Section 3.1. • Updated information on personnel and phone numbers in the table in Section 3.2.~~1,~~ ~~added TDP requirement to the ICP position responsibilities.~~ ~~• Section 3.2.8, added TDP requirement to the MSG Lead position responsibilities.~~ ~~• Section 3.2.5, Created new description for MSG Liaison duties. Renumbered remaining sections in chapter.~~ ~~• Section 3.2.8, added the words criticality alarms in zone warden indication of hazards.~~ • Deleted (paper or electronic) when signing into the accountability log in Section 3.16. • Revised terminology in Step 6.5.1.4, "Nuclear criticality safety violations are identified as a loss of documented controls…" • Revised Step 6.5.2.1 to reflect walk with purpose and get at least 15 feet of separation from the building. • Revised Note after Step 6.5.2.2 to reflect walk with purpose and get at least 15 feet of separation from the building. Also, changed the reference to Attachments 7 and 8. • Added new Section ~~3.2.9, added TDP requirement to the FOS position responsibilities.~~ ~~• Section 3.3, Individual Staff Responsibilities, added information regarding discarding PPE on building evacuations and PCM use for fire/criticality.~~ ~~• Sections 5.5 Criticality, added editorial comment.~~ ~~• Section 6.1.1, item 3, added "If the RPL has a loss of electrical power and Standby Power is still available, assemble in the lunch room. Personnel exiting Radiological Buffer Areas~~

Date	Rev. No.	Description
		~~do so without surveying through the PCMs. If personnel are wearing Personal Protective Equipment (PPE) clothing, are suspected of being contaminated, or have exited a Radiological Buffer Area, isolate them from other building occupants and request they be surveyed by Radiological Control Personnel.~~ • ~~Refer to Section 6.1.11 for Reduced~~8.7, *Ventilation* ~~Flows.~~ which was previously part of Section 8.6, *Compressed Air*. • ~~Section 6.1.10, Criticality, removed the~~ Deleted last part of sentence ~~from Item 3, Bullet 1.~~ • ~~Section 6.1.10 new item 3: Personnel exiting RBAs do so without surveying through the PCMs. If personnel are wearing Personal Protective Equipment (PPE) clothing, are suspected of being contaminated, or have exited a RBA, isolate them from other building occupants and request they be surveyed by Radiological Control Personnel.~~ • ~~Section 6.3 Natural Phenomena, to each event added the words "If evacuating the facility, have 375-2400 report the evacuation to the Occurrence Notification Center (376-2900)."~~ • ~~Section 8, Utility Disconnects: Added information on the Ramp Sump Pump local disconnect location.~~ • ~~Exhibit 12.1, Updated BERO members. Added new position~~ of ~~MSG Liaison~~ • ~~Section 12.2.1, Updated BED name (D Clark) and phone numbers. Added B Buyers contact info as 2nd alternate BED. Added and * to TDP positions with the note to coordinate changes~~first paragraph "located in ~~these positions with the TDP Administrator.~~ Room 94B" in Section 8.11, *325RPL Decontamination Shower/Sink*. • ~~Section 12.2.4, Added MSG Contact name and phone number to the emergency contact list.~~ ~~Exhibit 12.4, BED Checklist~~ • ~~Step 1, added requests for HFD and Hanford Patrol for certain events. RLEP 1.1, Checklist 3.1 consistency.~~ • ~~Step 2, added additional equipment to note regarding building evacuation due to bomb threats. RLEP 1.1, Checklist 3.1 consistency.~~ • ~~Step 2, added new bullet regarding actions for evacuation while under a take cover. RLEP 1.1, Checklist 3.1 consistency.~~ • ~~Step 6, added info regarding transportation events and event classification. Also added box with RCRA criteria. RLEP 1.1, Checklist 3.1 consistency.~~ • ~~Step 8, minor wording change. RLEP 1.1, Checklist 3.1 consistency.~~ • ~~Step 12 (new) regarding preservation of evidence at event scene. RLEP 1.1, Checklist 3.1 and MA-110, Exhibit A.16 consistency.~~ • ~~Renumbered all steps after 12.~~ ~~Exhibit 12.5, ICP Communicator Checklist~~ • ~~Inserted new step 5, related to actions required if event does NOT reach EAL criteria. PNNL-MA-110, Exhibit A.17 consistency.~~ • ~~Renumbered remaining steps.~~ • ~~Step 15, editorial change coy to copy.~~ ~~Exhibit 12.6, ICP Hazard Assessor Checklist~~ • ~~Step 3, minor editorial change, RLEP 1.1, Checklist 3.9 consistency.~~ • ~~Step 8, minor editorial change, RLEP 1.1, Checklist 3.9 consistency.~~ • ~~Part 2, Step 8, added not regarding decision to transport injured and contaminated personnel. RLEP 1.1, Checklist 3.9 consistency.~~ ~~Exhibit 12.7, Staging Area Supervisor Checklist~~

Date	Rev. No.	Description
		~~• Step 2, Revised Warning regarding use of additional electronic equipment in bomb threats. RLEP 1.1, Checklist 3.11 consistency~~ ~~• Added new step 7 to query staff regarding medications or medical conditions of which the BED needs to be made aware. Renumbered remaining steps. Change requested by SAS.~~ ~~• Added new step to remind SAS to have RHA confirm habitability of staging area and ICP.~~ ~~Exhibit 12.10, MSG Checklist~~ ~~• Added a step to have the MSG Liaison get safe route of travel and be dispatched to ICP.~~ ~~• Added new step for notifying BMI.(Their emergency number is (614) 424-4444)~~ ~~• Added new step related to preservation of evidence.~~ ~~Exhibit 12.11, Facility Operation Specialist Checklist~~ ~~• Step 2, added statement to remind FOS to communicate location of event scene operations to the BED. RLEP 1.1, Checklist 3.13 consistency.~~ ~~Exhibit 12.13, ICP Hazard Communicator checklist~~ ~~• Step 2 and 3, added shading to text boxes. RLEP 1.1, Checklist 3.10 consistency.~~ ~~• Added new step 5 to provide PNNL exposure evaluator number for the hazard communicator if needed.~~ ~~Exhibits 13.5, 6, 7 added new emergency equipment maps from the MIT.~~ ~~• Exhibit 14.a, 300 Area Protective Actions, revised table per RLEP 1.1, Appendix C, added 300 Area offsite Protective Actions & Recommendations. (nmm/lef)~~Changed the public address system phone number from" #1234 on BM phone" to "375-3700 on the VOIP phone". • Added footnote Section 1.0, Paragraph 4 which had inadvertently dropped off since Revision 15. • Updated Footnote 18 to reference its new location in Section 3.21 which had inadvertently been overlooked since Revision 15.
~~04/15/05~~	~~1~~	~~Fixed page numbering to start at page 2 on second page. Updated Bill Buyers phone number to 376-5612; changed Jeff Rencken as FOS and Zone Warden to Ed Arel. lef~~
~~06/13/05~~	~~1~~	~~Updated BERO contact names & numbers on pages 54-55, changed the MSG Support Lead to Mike Moran on page 62. (lef)~~
~~08/22/05~~	~~1~~	~~Updated ICP Hazards Communicator- Primary/J Horne and Alternate/L Nelson. Updated ICP Hazard Assessor/Radiological Primary/B Free and Alternate/J Horne. Updated Zone Wardens: Zone 4A Alternate D Kelly; Zone 7 Alternate M Lindberg; and Zone 9 Primary L Hogan. Page 49, section 9.2.2, added Note: Only Rad Worker 2 trained staff is allowed to volunteer for receiving emergency radiological exposures. lef~~
~~09/09/05~~	~~1~~	~~Page 60, replaced T Haynie as Zone Warden for Zone 4A and Industrial Hygiene/Occupational Safety with D Kelly on page 62, and added Don's cell phone. lef~~
~~09/13/05~~	~~1~~	~~Updated Rad Hazards Assessors to L Nelsen (primary) and R Sitsler (secondary) and Hazards Communicators Jack Horne (primary), H Black-Kania (1st Alternate) and F Bronson (2nd Alternate). lef~~
~~09/26/05~~	~~1~~	~~Updated Section 14.1, 300 Area Protective Actions per TL Bettendorf "the RLEP has changed". Added Table of Contents. Fixed spelling error for D Coffey, SAS Secondary. lef~~
~~11/07/05~~	~~1~~	~~Page 36 Updated Section 6.1.8 #2a,per TL Bettendorf:~~ ~~• Move personnel from affected area to a safe location.~~ ~~• If the health and safety of the building occupants is such that a building evacuation is necessary, pull the fire alarm.~~ ~~• Notify the PNNL Operations Center at 375-2400.~~

Date	Rev. No.	Description
		~~• Notify the Safety and Health Representative.~~ ~~Page 64, Section 12.2.4, Table 14.a per DE Clark:~~ ~~• New 90-day Storage Area SFO: G Varljen;~~ ~~• New 90-Day Storage Non-SFO M Vucelick. (lef)~~
~~02/2006~~05/23/16	~~2006~~16	~~Reformatted per F&O guidelines.~~ ~~• Added C Caldwell as Safety & Health approval signature.~~ ~~• Clarified the acronyms throughout the document.~~ Updated ~~SPC to PNNL Operations Center throughout the BEP.~~the following: • Section 1.~~6,~~0 added ~~a building specific alarm for Hot cell DP at R Thornhill and R Scheele's request to standardize HLRF response procedures.~~ ~~• Replaced DOE-RL throughout the document with DOE.~~ ~~• Section 3.2.8, Clarified~~ that ~~responses apply to ZW alternates also.~~ ~~• Section 3.3, Clarified where individuals can find the electronic copy of the RPL BEP.~~ ~~• Section 6.1.5.1, added a bullet regarding need to notify the Environmental Support Contact to perform appropriate notifications to the Department of Ecology for a major tank spill.~~ ~~• Section 6.1.9, clarification that various alarms may occur on Radiological Material Release.~~ ~~• Section 6.3, editorial change.~~ ~~• Section 6.4.2 "Hostage Situation/Armed Intruder/Violence in the Workplace" added information based on drills from violence in the workplace.~~ ~~• Section 7.5, corrected location of the air compressor isolation valve.~~ ~~• Section 7.9, corrected location of the local disconnect switch for RPL ramp sump pump.~~ ~~• Section 8.2. Added clarification for the need to notify the Department of Ecology within 30 days after an incident involving a release from a tank system to the environment that does not result in an activation of the contingency plan.~~ ~~• Attachment 13.1, update~~ BERO ~~listing to new~~ members~~.~~ • ~~Attachment 13.1,~~ will use checklist and checklists are updated ~~BED (Francis Buck), 1st Alt BED (Bill Buyers), 2nd Alternate N/A.~~ to changes received from the Hanford Site Emergency Preparedness Program. ~~• Attachment 13.1, updated ICP Communicator adding K Smith as Primary Responder; R Schumacher as 1st Alternate and F Buck as 2nd Alternate.~~ ~~• Attachment 13.5, updated names for ZW assignments.~~ ~~• Attachment 13.6, New SAS- Deborah Coffey, 1st Alternate- K Smith, 2nd Alternate-N/A.~~ ~~• Attachment 13.7, added the secondary phone line number for the PNNL Operations Center.~~ ~~• Exhibit 13.13 – Handling of Radiologically Contaminated/Deceased Worker Checklist, added a step to verify the appropriate DOE Facility Representative has been notified. (nmm)~~ ~~• Added Zone Warden Area maps and updated other building MIT maps.~~ • ~~SES: RPL-2006-021D. FG Buck. (lef)~~Section 3.2 tables either added new personnel or switched order of primary and alternates. • Section 3.22 was changed so that PNNL staff member performing work in or having unescorted access approval into the 325RPL reviews the EIP annually. • Added new section 6.4.5, Stack Monitor Alarm with actions to be taken. • Added new section 6.5.2.5, for Criticality Actions to support recovery plan actions.

Date	Rev. No.	Description
~~04/25/06~~	~~2006~~	~~• Update FG Buck cell phone: 528-0141 and WT Buyers cell phone 521-0217.~~ ~~• Page 65; Deleted F Bronson as ICP Hazards Communicator. Replaced J Horne/ICP Hazards Assessor (Radiological)/Primary with B Free. J Horne is now 1st Alternate and H Black-Kania is 2nd Alternate.~~ ~~• Page 65: ICP Hazards Communicator: L Nelson/Primary and R Sitsler/1st Alternate.~~ ~~• Replaced MSG Checklist with current checklist from the EP Office, per TL Bettendorf. (lef)~~ ~~CE: RPL-2004-194D. USQE FG Buck.~~
~~08/10/06~~	~~2006~~	~~• Update 1st Alternate BED to S Sanan; Deleted home phone number for L Ashbeck; Updated MSG Contact: RD Sharp (lef); CE: RPL-2004-194D. USQE/FG Buck.~~
~~10/24/06~~	~~2006~~	~~• Fixed spelling and grammar errors, web link errors, Attachment numbers, and font sizes throughout document.~~ ~~• Attachment 13.1 – New Assisting Communicator #1 – L Ashbeck. New ICP Hazards Communicators: 1- J Horne, 2 – B Free, and 3 – R Sitsler. New ICP Hazards Assessors – 1-B Free, 2- J Horne, and 3- H Black-Kania.~~ ~~• Attachment 13.7 - New MSG Contact – R Sharp.~~ ~~• CE: RPL-2004-194D. FG Buck/USQE 10/24/06~~
~~01/10/07~~	~~2006~~	~~Updates to the BERO staff, Waste Management, and Communicators are as follows:~~ ~~Primary: Assisting Communicator: Lori Arel (W:376-3611, H:734-1574); 2nd Alternate ICP Hazards Communicator T Milham (Work: 376-0700); 1st Alternate ICP Recorder L Arel (W: 376-3611, H: 734-1574); Zone 4A Primary R Del Mar (376-2822); Zone 5 Primary L Hogan (372-1427); Zone 8 Secondary J Logan (376-1382); Zone 9: Primary J Logan (376-1382)~~ ~~1st Alternate SAS J Andrie (376-0502); 2nd Alternate SAS T Schlotman (376-3206)~~ ~~Under Waste Management: Remove G Varljen, Add R Del Mar (W:376-2822, C: 530-8308)~~ ~~CE: RPL-2004-194D. FG Buck/USQE~~
~~02/05/07~~	~~2007-1~~	~~Annual BEP Update:~~ ~~• Page 5, editorial correction, Paragraph 2, "whose"~~ ~~• Page 9, deleted last sentence in Paragraph 1.7. Incorrect statement.~~ ~~• Throughout the BEP deleted specific section reference number to PNNL-MA-110. MA-110 has been revised and all the references are now out of date. Removing section references will allow changes to be made to PNNL-MA-110 without requiring BEP revision. (pages 12, 21, 46~~ ~~• Page 14, added a responsibility to the BED Section 3.1 for planning conducting and documenting emergency drills per MA-110 requirements.~~ ~~• Page 41, updated the step 2 of the Bomb Threat actions per RLEP 1.1~~ ~~• Page 48, Section 9.1 first bullet, revised wording related to location of Class D fire extinguishers if reactive metals are present.~~ ~~• Page 63, Updated drawing to show building removals and be consistent with TSD maps.~~ ~~• Page 65, new Alternate Assisting Communicator and Primary ICP Recorder T Mars. 2nd Alternate ICP Hazards Communicator W Buckner. 1st Alternate SAS J Jao and 2nd Alternate K Pool.~~ ~~• Page 72, replaced T Mars/TSD contact with JK Larsen.~~ ~~• Page 73, Nuclear Work Team Leader cell phone correction 521-6072 and deleted the pager.~~ ~~• Throughout all the checklists, revised RL to Hanford as appropriate. RLEP's refer to everything as Hanford vs. RL now. (e.g., RL Notification Form is now the Hanford Emergency Notification form.)~~

Date	Rev. No.	Description
		• ~~Page 79, BED Checklist Step 19, revised wording for personnel health advocate notification per RLEP 1.1, and corrected attachment number to 13.13.~~ • ~~Page 79, Step 20, added IC or the Liaison Officer, RLEP 1.1 consistency and correct attachment number 13.13.~~ • ~~Page 79, Step 23, corrected attachment number to 13.18, relocated the note regarding event closeout to Step 23.~~ • ~~Page 81, ICP Communicator Checklist, step 3, revised Hazard Assessors to Hazard Communicator, RLEP 1.1 consistency.~~ • ~~Page 81, ICP Communicator Checklist, reformatted Substep to A.~~ • ~~Page 84, Attachment 13.10 Removed ICP from Hazard Assessors checklist title. RLEP 1.1 consistency.~~ • ~~Page 88, SAS Checklist, editorial change to note in Step 2.~~ • ~~Page 88, Step 4 added note regarding injured personnel. RPL Drill Security 07-02 corrective action.~~ • ~~Page 91, Attachment 13.13, editorial change, RLEP consistency.~~ • ~~Page 96, Deleted duplicate steps from the MSG checklist.~~ • ~~Page 98, FOS checklist, minor editorial change Step 1 and 2, RLEP consistency. Added note regarding injured personnel. RPL Drill Security 07-02 corrective action.~~ • ~~Page 100, ICP Hazard Communicator Checklist. Added several bullets for RLEP consistency. (NMM/lef)~~ ~~CAT EX: RPL-2004-194D. FG Buck/USQE.~~
~~08/06/07~~	~~2007~~	• ~~Section 1.3, replaced RSEG ownership of the RPL with the Director of Nuclear Operations as senior line manager.~~ • ~~Updated Alternate ICP Communicator, Primary Responder/Chemical Assessor, 1st Alternate SAS, and 2nd Alternate SAS, and changed Zones 4 and 4A Zone Wardens per L Arel. (lef)~~ • ~~CE: RPL-2004-194D. FG Buck/USQE~~
~~09/17/07~~	~~2007~~	• ~~Page 65, change title of MSG Lead to MSG Liaison per RPL Bldg Managers office. (lef)~~ • ~~CE: RPL-2004-194D, FG Buck/USQE.~~
~~10/29/07~~	~~2007~~	• ~~Replaced F Buck with DG Wandler as BED per BM Durst.~~ • ~~New ICP Communicator 1st Alt: John Logan; ICP Communicator 2nd Alternate- NONE.~~ • ~~New FOS 1st Alt: D Wandler and no FOS 2nd Alt.~~ • ~~CE: RPL-2004-194D-DGW/USQE~~

Date	Rev. No.	Description
~~11/10/07~~	~~2007-2~~	~~Major revision consisting of:~~ ~~• New signature page/approvers per LO Casazza.~~ ~~• Section 1.3, revised Owner/Operator to the new NOD organization manager.~~ ~~• Section 1.6, Deleted the word "High" from Glovebox Differential Pressure Alarm (Signal) box~~ ~~• Section 2.3, added references to ADM-001, *Document Production & Distribution* for making minor and major revisions to this procedure.~~ ~~• Section 6.1.11, added 3rd bullet "Zone Wardens for Zone 2 and Zone 8, activate flashing red warning lights.~~ ~~• Section 6.4.4, added 3rd bullet: "Zone Wardens for Zone 2 and Zone 8 activate flashing red warning lights."~~ ~~• Attachment 13.11, Deleted #5: Verify that the Zone 2 and Zone 8 Zone Wardens turned on the flashing red access warning lights identified in the Zone Warden Checklist"; renumbered remaining items in the checklist.~~ ~~• Attachment 13.12, #1, added "In the event of Reduced Ventilation or Take Cover…"~~ ~~• New BERO staff assignments: 1st Alternate Assisting Communicator: B Schumacher; 1st Alternate FOS; J Logan.~~ ~~• New Zone Warden assignments: Zone 8 Secondary and Zone 9 Primary: B Schumacher. (lla/lef)~~ ~~• CE: RPL-2004-194D. DGW~~
~~06/13/08~~	~~2008~~	~~• Annual review.~~ ~~• Replaced the following checklists from PNL-MA-110: Attachment 13.10, Hazards Assessors; Attachment 13.15, Facility Operations Specialist; Attachment 13.17, ICP Hazards Communicator; and Attachment 13.14, MSG Checklist. Deleted Attachment 13.16, Hanford Emergency Notification Form~~ ~~• Updated phone numbers for members of BERO; Attachments 13.1, 13.5, and 13.7. (lef)~~ ~~• RPL-2008-120S. DGW~~
~~09/25/08~~	~~2008~~	~~• Updated signature page with new BED, NOD, and FSR signatures~~ ~~• Multiple updates to the RPL BERO staff list~~ ~~• Added PNNL CNS to Section 1.5~~ ~~• Updated fire signal in Section 1.5 from gong/electric chime to slow whoop followed by voice message. (DGW/lef)~~ ~~• CE: RPL-2004-194D. DGW 9/16/08~~
~~12/01/08~~	~~2008~~	~~• Replaced crash alarm system with the TNS and the CNS as appropriate~~ ~~• Deleted crash alarm phone location on Attachment 12.5~~ ~~• Updated maps from MIT~~ ~~• Changed location ICP from Building 3760 to Building 350; added new fax number for Building 350 ICP~~ ~~• SES: RPL-2008-231S. DGW/USQE~~
~~12/11/08~~	~~2008~~	~~• Section 1.0, updated WAC [WAC 173-303-350 (3)(d)] per HT Tilden.~~ ~~• Updated location of ICP in 350 building to Room 131 (cak)~~ ~~• Moved Section 6.10, Facility Take Cover to Section 7.0 for consistency throughout all BEPs and renumbered all subsequent sections and attachments as appropriate.~~ ~~• Updated BED checklist, #7:~~

Date	Rev. No.	Description
		~~• Brief hazard assessors and FOS on event and if practical deploy them to the event scene as soon as possible.~~ ~~• Updated BED Checklist #15, added new NOTE:~~ ~~• If the location of the ICP has or will be changed call 375-2400 and assure the POC will be made aware of its new location. (lef/TLB)~~ ~~CE: RPL-2008-087D. USQE/DGW 1/7/09.~~
~~01/15/09~~	~~2008~~	~~• Attachment 14.7, Added EOC phone numbers for 350 building: 372-0727, 372-0801 and fax 372-0723. (lef)~~ ~~CE: RPL-2008-087D. DGW/USQE 1/15/09~~
~~06/10/09~~	~~2009~~	~~• DSA Update and BERO staff changes:~~ ~~• Approval changes: new Waste Operations signature: K McDowell~~ ~~• New Section 1.7 , Deviations from Technical Safety Requirements~~ ~~• Section 3.6: Deleted 90-day storage areas in Rooms 44, 61, 603, and the East Storage Yard and added the Shielded Analytical Laboratory Hot Cells as a new 90-day storage area.~~ ~~• Section 6.4 – moved NOTE from top of Section 6.4 to end of subsection 6.4.1.2: *If local audible alarm actuates as a result of a transient condition associated with a known work condition, then it is acceptable (as applicable) to attempt to manually reset the alarm or wait 10 seconds for the alarm to automatically reset before taking emergency actions. If the alarm lasts longer than 10 seconds or the direct cause of the alarm is unknown, then immediately perform emergency actions.*~~ ~~• Section 9.2.1: Added 326 Building to the list of emergency decontamination facilities.~~ ~~• Section 12.2: The EALs are considered OUO information have have been removed from the server, therefore, the EALs statement has been revised removing the weblink and directing staff to obtain copies of the EALs for RPL from the RPL BM.~~ ~~• Attachments 13.5 and 13.7 – updated building maps identifying new locations of the 90-day storage areas.~~ ~~• Attachment 14.0 – per EPO: Deleted MSG Checklist (old Attachment 14.14) – (this checklist is now a standalone procedure; see ADM-EPIP-7.2). Renumbered remaining Attachments in Attachment 14 – 14.14 is now FOS – Checklisted Duties; 14.15 is ICP Hazards Communicator Checklisted Duties, and Attachment 14.16 is Emergency Closeout Checklisted Duties.~~ ~~• Attachment 14.1: New BED2 HF Kerschner. New ICP Communicators T DeGuia, and T Campbell, 3-I Henderson. New Assisting Communicator K Rightmire. New Chemical Assessors K Sheffield and A Nicholson. ICP Hazards Communicator cell phone update~~ ~~• Attachment 14.4 : New BED2 HF Kerschner~~ ~~• Attachment 14.5: Rearranged the attachment to list the zone areas on top of the zone warden assignments. New Zone Wardens: Zone 2 Secondary J Larsen; Zone 3 Secondary T Smith; Zone 5 Primary L Oukrop; Zone 8 Primary Jamin Trevino; Zone 9 Secondary K Lombardo.~~ ~~• Attachment 14.7: New Safety & Health Representative K Sheffield. New Waste Management TSD contact K McDowell.~~ ~~• Updated Staging Area Map.~~ ~~• Attachment 14.16: Per EPO, reorganized table for better flow of information. (NMM/CAK/lef)~~
~~06/10/09~~	~~2009~~	~~Replaced three Emergency checklists per the EPO: Attachment 14.4 – Facility Operations Specialist (FOS) Checklist, Attachment 14.8 – BED Hazardous Material Facilities (RPL) Checklist, and Attachment 14.16, (renamed) Event Closeout Form. (lef) USQ: RPL-200~~

Date	Rev. No.	Description
~~06/15/09~~	~~2009~~	~~Attachment 14.1, Per the EPO and the Department of Ecology, added "Environmental Support Contact" (regulatory notifications only) and the PNNL Operations Center phone number 375-2400. (lef); CX: RPL-2008-087D~~
~~01/11/10~~	~~2009~~	~~Updated names and points of contact management personnel for the BERO. Deleted information Note regarding audible glove box alarms. (kl); Updated Hanford POC phone number from 373-3800 to 373-0911 per EP Office. (lef)~~
~~05/24/10~~	~~2010~~	~~Updated the 350 Building alternate ICP room number. Replaced references for SBMS with HDI. Added steps to fight fires in hot cells and gloveboxes. Updates to criticality alarm tests are now semiannual, not quarterly. Added alpha sentry CAMs to potential alarms. Updated emergency decontamination facility information. Corrected the location of the compressed air isolation. Added paging system information. Updated names and points of contact for BERO and standardized emergency telephone number list with the rest of the BEPs. Moved the emergency contacts to section 3.0 and added EOC Tech Reps Patello, Thornhill, and Steen. Section 4.1, added M Zabel as Primary Chemical Assessor, D Falk as 1st Alternate and Abby Nicholson as 2nd Alternate. Deleted zone warden list, moving it to RBAC. New Section 15.0 which lists all referenced documents and weblinks for emergency preparedness checklists. Section 4.1 – deleted MSG Recorder, B Ekstrom per EPO; Per Environmental Management request, Section 11.4 has been revised to list the items in the spill kits. Section 8.1.2.2, Facility Take Cover event – inside RPL, added: Staff should refrain from eating and drinking during a take cover event if physically able, until an appropriate evaluation of the event can be made. (cak/tlb/lef)~~
~~10/20/10~~	~~2010~~	~~Added the following Note in sections 6.1.1, 6.1.2, 6.2, 6.2.2, 6.2.3, 7.4, 6.5, 6.7, 6.8 and added it as a step in 6.9.2: If appropriate, classify the event using the RPL EALs; Updated first floor and basement emergency equipment maps; Merged Sections 3.0, Emergency Telephone Numbers and Section 4.0, BERO into one section/Section 3.0, BERO and adjusted section reference numbers throughout the document; Replaced K McDowell with KM McDonald as Low Level TSD contact; Deleted Room 32 as TSD in section 3.19. (tlb/cak/lef)~~
~~04/7/11~~	~~2011~~	~~Updated emergency equipment and evacuation route maps; Updated phone numbers due to VOIP system installation; Changed location of the decon shower to 3410; Updated locations of TSDs and 90-day storage areas per EL Grohs; Updated name for AMH to CSC Hanford Occupational Health Services (CSC HOHS); Updated S&H Rep from D Falk to M Zabel. (cak/lef)~~
~~06/17/11~~	~~2011a~~	~~Updated Section 1.7 in accordance with revised wording in TSR AC 5.11; Added clarification notes in Sections 6.1.1.4 and 10.2 that fire extinguishers with glove piercing tips are for HFD use only. (tac)~~
~~08/15/11~~	~~2011b~~	~~Updated BERO staff listing; Added 373-0911 to be dialed from cell phones and added Note about Becquerel conversion to disintegration per minute in Section 6.4. (CAK/lef)~~
~~09/20/11~~	~~2011-2~~	~~Verified HDI title changes and F&O organizational titles are correct. Section 5.5, updated Criticality Hazards. Section 6.5 was also revised. Updated the location of the RPL building within in the 300 Area and the PIV locations. (cak/lef)~~
~~01/30/12~~	~~2012~~	~~Further definition of restart process consistent with DOE O 420.1B, Facility Safety. Added references to PNNL institutional plans/ procedures for event recovery.~~
~~01/01/13~~	~~2013~~	~~Updated per HF Kerschner's request, changing Section 11.0 and staff response to visitors. Updated HDI references. Updated PNNL's Occupational Health Provider (OH). Revised references for ADM-EPIP-7.2 to ADM-EPIP-2.0. Updated mailing address: zip code to 99354. Deleted 3790 as an alternate staging area. Changed Section 6.9 from Hostage Situation/Armed Intruder to "Active Shooter in Building." Revised Section 11.0. Added more information about H&V emergency shutdown~~

Date	Rev. No.	Description
~~03/14/13~~	~~2013a~~	~~Replaced emergency equipment maps due to emergency equipment changes.~~
~~09/25/13~~	~~2013-1~~	~~Changed BED/BM from CA Kooiker to EM Hanson (acting); Changed Utility Operations Supervisor from RL McKinney to D Cravens, deleted supervisor's pager. Changed D Coffey's contact information. Added Step 6.6.1.1 – Verify that all equipment and heat generating devices inside of laboratory gloveboxes and inside of hot cells are shut down. Step 6.8.1.4 modified to allow RF equipment outside 100 feet from the RPL; Revised staging area location to the south end of Lane #9. Added Alternate Staging Area Map, Attachment 8. Added CS Dreyer as BED3.~~
~~01/29/14~~	~~2014~~	~~Updated to include the North Storage Pad as part of the RPL facility; Deleted "klaxon horn" from "Take Cover" alarms in Section 1.5; Identified new Hazards Communicators and Hazards Assessors.; Updated Section 8.0 and reformatted cover page; updated BM to PT Saueressig~~
~~02/27/14~~	~~2014-1~~	~~Changed organization title from EMSD to EP&RP.~~ ~~Changed BEDs: BED: PT Saueressig, BED1: EM Hanson and changed FOS to DG Wandler.~~ ~~Updated emergency equipment and evacuation route maps.~~ ~~Replaced UO WTL Don Cravens with TJ Vanderlinden and changed EOC RPL Tech Rep from Gertrude Patello to Karl Pool.~~ ~~Section 2.2 – Acronyms – added PNSO~~ ~~Section 3.2 – Added PNSO representatives to table~~ ~~Section 3.3 – Added PNSO representatives to graphic~~ ~~Updated links to emergency preparedness forms.~~
~~05/15/14~~	~~12~~	~~• Changed revision number to 12 to support Vault implementation.~~ ~~• Changed Safety and Health Representative to P Aardal~~ ~~• Changed Chemical Assessor assignments: Added P Aardal as Primary Responder moved M Zabel to 1st Alternate and moved D Falk to 2nd Alternative.~~ ~~• Changed terminology for MSDS (Material Safety Data Sheets) to SDS (Safety Data Sheets).~~ ~~• Updated Zone Warden maps.~~ ~~• Changed SAS Assignments: moved T Schlotman to 1st Alternate; added J Bohlke 2nd Alternate.~~ ~~• Changed FOS Assignments: Added Johnny Trevino 2nd Alternative.~~
~~10/20/14~~	~~13~~	~~• Section 3.19, added Rooms 610, 3714 pad, and portions of 603 and 604A to TSD locations.~~ ~~• Unique Program Laboratory Expertise: added cell numbers for Trevor VanArsdale and John Holland.~~ ~~• Added footnote language to be the same style as used in DOE 94-02 per H Tilden's request per the 3/2014 Ecology inspection.~~ ~~• Replaced E Arel/WTL with D Cravens as WTL; replaced P Aardal/S&H Rep with M Zabel. Pts/lef~~ ~~• Changed reference to ADM-EPIP-8.0 (retired) to ADM-EPIP-3.0, *Recovery Plan* per TL Bettendorf and change approved by PT Saueressig prior to release of this revision.~~ ~~• Changed out the 300 Area site map (Attachment 9).~~ ~~• Updated Section 12.1 per the recent DOE-0223 updates (TLB).~~ ~~• During routing, the following were requested to be added to the BEP per PT Saueressig:~~ ~~– Adding a note prior to the first footnote.~~ ~~– Changing table so that only take cover addresses gathering in the lunchroom.~~

Date	Rev. No.	Description
		~~Changing footnote making it clear, concise, less redundant. This would apply to all of the footnotes.~~ ~~Adding the permit to the reference documents.~~
~~02/12/15~~	~~14~~	~~• Added J Sweesy to Section 3.2 as the Primary Chemical Hazards Assessor (moved M Zabel and D Falk to first and second alternate, respectively). Revised Section 8.2, Air.~~ ~~• Added new Section 8.10, Decontamination Shower/Sink. This information was included in Section 9.2.1 and Attachment 1.~~ ~~• Updated pages 52 and 53 with the latest 300 Area Protective Actions info from RLEP 1.1, 04/30/14 per TL Bettendorf.~~ ~~• Changes during approval per HT Tilden and approved per PT Saueressig: footnote corrections and added the requirement to maintaining a controlled copy BEP in the 325 HWTUs operating record. Section 3.20, moved the paragraph break between the first and second paragraphs so that only the second paragraph is RCRA enforceable. (htt/pts) 03/10/15: per email from CS Dreyer: USQ RPL-2015-058S is still valid for these changes. (esd)~~
01/18/16	15	Updated the following: • Section 3.1 and Section 3.2 tables (new personnel) • Compressor air system information • Integrated Waste Management System information • Criticality response actions in response to a criticality event derived from Criticality Accident Assessment • Updated RPL EALs reference in Section 12.2 to RLEP 1.0 – Appendix 1-PNNL.325. • Technical editing of the entire document for consistency (format, titles, names, abbreviations, website links, etc.), including new checklist names and weblinks.

Quarter Ending June 30, 2017 24590-LAW-PCN-ENV-16-008

Hanford Facility RCRA Permit Modification Notification Form
Part III, Operating Unit 10
Waste Treatment and Immobilization Plant

Index

Page 2 of 3: Hanford Facility RCRA Permit, Part III, Operating Unit 10, Waste Treatment and Immobilization Plant

This integrity assessment includes two LAW RLD system vessels; the LAW Plant Wash Vessel (RLD-VSL-00003) and the LAW SBS Condensate Collection Vessel (RLD-VSL-00005) including their appurtenances or offspring items.

The LAW RLD system vessels assessed include:

1. RLD-VSL-00003 located at Elevation 3'-0" in Cell, Room L-0126
2. RLD-VSL-00005 located at Elevation 3'-0" in Cell, Room L-0126 of the LAW Facility

Submitted by Co-Operator:

Roger J. Landon 4/19/17
Roger J. Landon Date

Reviewed by ORP Program Office:

for Walter Adel 5/30/17
J. F. Grindstaff Date

Quarter Ending June 30, 2017 24590-LAW-PCN-ENV-16-008

Hanford Facility RCRA Permit Modification Notification Form	
Unit: **Waste Treatment and Immobilization Plant**	Permit Part: **Part III, Operating Unit 10**

Description of Modification:

This Class 1[1] modification will update the following Process Flow Diagram for the LAW Liquid Effluent System RLD & NLD (24590-LAW-M5-V17T-P0014). The following Process Flow Diagram is submitted to replace the one currently in Appendix 9.1.

Appendix 9.1			
Replace	24590-LAW-M5-V17T-P0014, Rev. 0	With	24590-LAW-M5-V17T-00014, Rev. 6

This Class 1[1] modification will also update the Corrosion Evaluations for RLD-VSL-00003/00005 (24590-LAW-N1D-RLD-00002, 24590-LAW-N1D-RLD-00005). The following Corrosion Evaluations are submitted to replace the ones currently in Appendix 9.9

Appendix 9.9			
Replace	24590-LAW-N1D-RLD-00002, Rev. 3	With	24590-LAW-N1D-RLD-00002, Rev. 4
Replace	24590-LAW-N1D-RLD-00005, Rev. 4	With	24590-LAW-N1D-RLD-00005, Rev. 5

This Class 1[1] modification requests Ecology approval and incorporation into the permit the below referenced integrity assessment report. The report has been updated by the Independent Qualified Registered Professional Engineer (IQRPE).

Appendix 9.11			
Replace	COGEMA-IA-026 - 24590-CM-HC4-HXYG-00138-02-07, Rev. 0 Structural Integrity Assessment Report for LAW Vitrification Facility RLD Vessels (RLD-VSL-00003/5) (COGEMA-IA-026)	With	24590-CM-HC4-HXYG-00240 IQRPE Structural Integrity Assessment Report for LAW RLD Plant Wash Vessel (RLD-VSL-00003) and SBS Condensate Collection Vessel (RLD-VSL-00005) (IA-3019128-000)

Updates to the integrity assessment report for the LAW Plant Wash Vessel (RLD-VSL-00003) and the LAW SBS Condensate Collection Vessel (RLD-VSL-00005) are summarized below:

The documents listed in the "References" row and under the "Source of Information" column were updated. These documents were reviewed to assess the design of the LAW Plant Wash Vessel (RLD-VSL-00003) and the SBS Condensate Collection Vessel (RLD-VSL-00005).

Language from the "Waste Characteristics" rows for LAW Plant Wash Vessel (RLD-VSL-00003) and the SBS Condensate Collection Vessel (RLD-VSL-00005) was updated to reflect that for the DFLAW configuration, effluent will be transferred to DEP-VSL-00002.

For each item of "Information Assessed" in the integrity assessment report, the items listed under the "Source of Information" column were reviewed and found to furnish adequate design controls and requirements to ensure the design fully satisfies the requirements of Washington Administrative Code, WAC-173-303-640, Dangerous Waste Regulations.

Quarter Ending June 30, 2017 24590-LAW-PCN-ENV-16-008

This PCN updates information in Appendix 9.11 to reflect current design. This DWP component may be re-evaluated to confirm design adequacy. If the re-evaluation results in future design changes, the changes will be reviewed by Ecology in subsequent permit modifications.

In accordance with Permit Condition III.10.C.2.e, this permit modification sent to Ecology may include page changes to the Permit, attachments, and permit application supporting documentation.

WAC 173-303-830 Modification Class:	Class 1	Class [1]1	Class 2	Class 3
Please mark the Modification Class:		X		

Enter relevant WAC 173-303-830, Appendix I Modification citation number:
Enter wording of WAC 173-303-830, Appendix I Modification citation:

In accordance with WAC 173-303-830(4)(d)(i), this modification notification is requested to be reviewed and approved as a Class [1]1 modification. WAC 173-303-830(4)(d)(ii)(A) states, "Class 1 modifications apply to minor changes that keep the permit current with routine changes to the facility or its operation. These changes do not substantially alter the permit conditions or reduce the capacity of the facility to protect human health or the environment. In the case of Class 1 modifications, the director may require prior approval."

Modification Approved/Concur: [X] Yes [ ] Denied (state reason below)

Reason for denial:

Reviewed by Ecology:

S. Dahl 3/8/18
S. Dahl Date

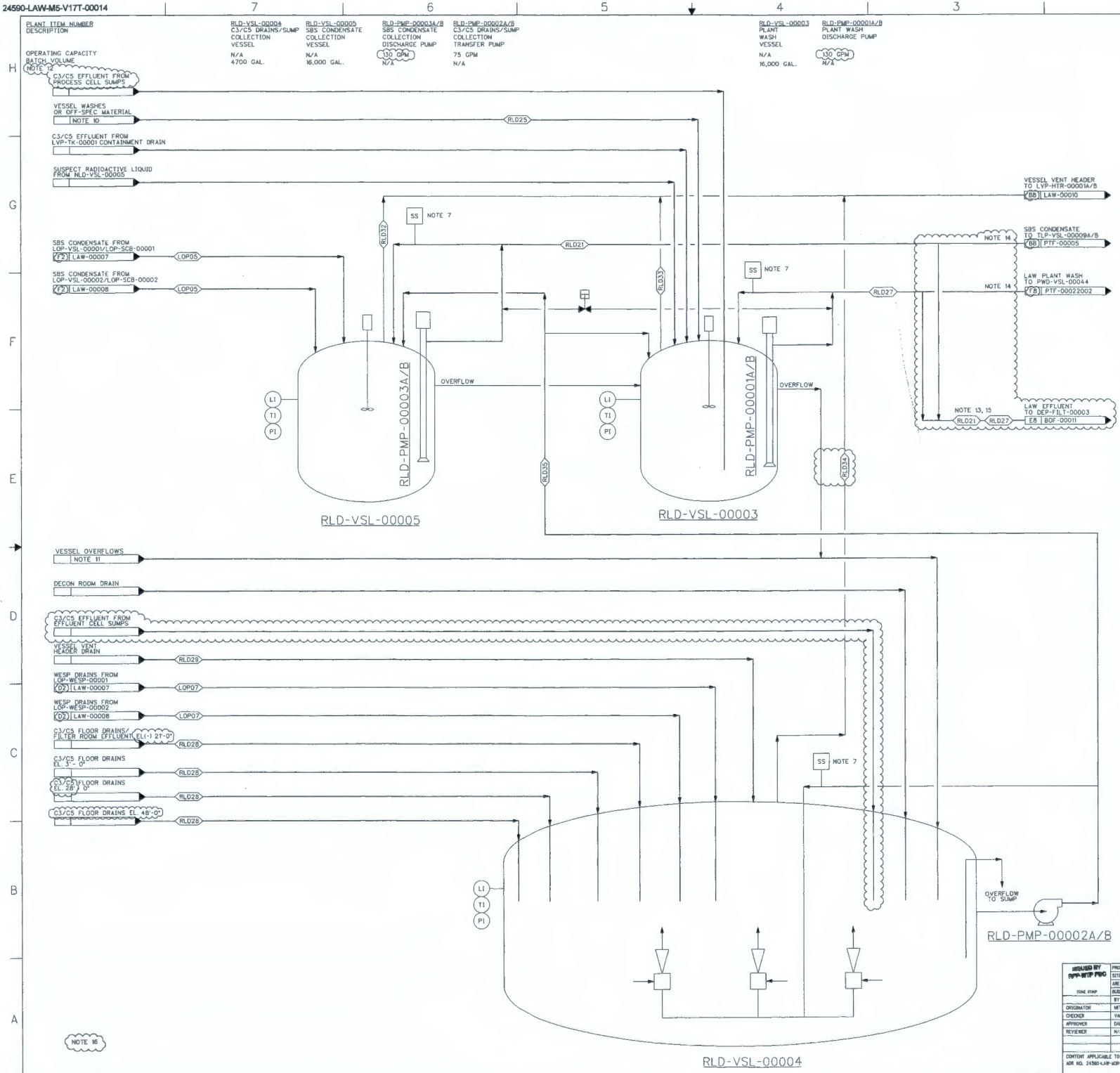

NOTES:

1. DELETED
2. ONLY MAJOR INDICATION AND CONTROL INSTRUMENTATION SHOWN.
3. VALVES SHOWN ONLY TO INDICATE PROCESS INTENT.
4.-5. DELETED
6. ALL VESSELS WILL BE FITTED WITH INTERNAL SPRAY NOZZLES FOR DECONTAMINATION.
7. SAMPLING OF VESSELS WILL UTILIZE A DISCHARGE PUMP WITH A RECIRCULATING LEG SAMPLING SYSTEM.
8. DELETED
9. CONTENTS OF THIS DOCUMENT ARE DANGEROUS WASTE PERMIT AFFECTING.
10. PLANT WASH VESSEL RECEIVES WASH EFFLUENT OR OFF-SPECIFICATION MATERIAL FROM LCP-VSL-00001 & -00002, AND LFP-VSL-00001 THROUGH -00004.
11. C3/C5 DRAINS/SUMP COLLECTION VESSEL RECEIVES OVERFLOWS FROM LCP-VSL-00001 & -00002, LFP-VSL-00001, -00002, -00003, AND RLD-VSL-00003.
12. THE PUMP TRANSFER RATES SHOWN ARE THE MINIMUM REQUIRED. ACTUAL PUMP RATES MAY BE HIGHER.
13. TO BE USED ONLY FOR DIRECT FEED LAW OPERATION.
14. WHEN OPERATING IN DIRECT FEED LAW MODE, TRANSFERS TO PT FACILITY WILL HAVE POSITIVE ISOLATION INSIDE LAW.
15. RLD21 AND RLD27 TRANSFER FROM LAW THROUGH THE SAME LINE AT SEPARATE TIMES WITHOUT BLENDING.
16. FOR MASS AND ENERGY BALANCE REFER TO 24590-WTP-DB-PET-09-001, PROCESS INPUTS BASSIS OF DESIGN (PIBOD).
17. REVISION 6 RLD-PMP-00003A/B AND -00001A/B CAPACITIES CHANGED FROM 175 GPM TO 130 GPM PER 24590-LAW-MSN-V17T-00026. REVISED/ADDED/DELETED NOTES, REFERENCES, OFF SHEET CONNECTORS, STREAM NUMBERS, AND ROUTING OF C3/C5 EFFLUENT FROM EFFLUENT CELL SUMPS.

HOLD/OPEN ITEMS:

NONE

REFERENCES:

1. 24590-LAW-3ZD-RLD-00001, LAW FACILITY RADIOACTIVE LIQUID WASTE DISPOSAL (RLD) SYSTEM DESIGN DESRIPTION.
2. 24590-WTP-M5-V17T-00001, PROCESS FLOW DIAGRAM LEGEND & SYMBOLS.
3. 24590-WTP-RPT-PR-01-008, PROCESS STREAM NUMBERS.
4. 24590-WTP-RPT-ENG-02-009, SYSTEM AND AREA LOCATORS LIST AND SYSTEM DIVISION OF RESPONSIBILITY.
5. 24590-WTP-~~BOP~~-DO38-00044, STANDARD COMPONENT NUMBERING.
6. 24590-LAW-MVC-RLD-00009, PROCESS DATA INPUT FOR LAW C3/C5 DRAINS/SUMP COLLECTION VESSEL (RLD-VSL-00004) AND TRANSFER PUMPS (RLD-PMP-00002A/B).
7. 24590-LAW-MVC-RLD-00007, PROCESS DATA INPUT FOR LAW SBS CONDENSATE COLLECTION VESSEL (RLD-VSL-00005) AND DISCHARGE PUMPS (RLD-PMP-00003A/B).
8. 24590-LAW-MVC-RLD-00008, PROCESS DATA INPUT FOR LAW PLANT WASH VESSEL (RLD-VSL-00003) AND DISCHARGE PUMPS (RLD-PMP-00001A/B).

REV	DESCRIPTION	ORG	CHKD	RVWD	APVD	DATE
6	REVISED PER NOTE 17 & ADDED DIRECT FEED ROUTE	DTC	SN	DJB	DRP	3/24/16
5	SEE ARCHIVED REV 5 PFD FOR REVISION 5 CHANGES	MW	YN	JF	RS/AS	11/07/07
0	THIS DRAWING SUPERSEDES DWG-M3791V-PROM06 REV 3	DM	TJV	N/A	AGD	8/16/01

REVISION HISTORY

ORIGINATOR	MITCHELL, DOLORES	8/16/01
CHECKER	VALENTI, THOMAS	8/16/01
APPROVER	DADA, ABDUL	8/16/01
REVIEWER	N/A	

ISSUED BY RPP-WTP PMO
PROJECT No. 24590
SITE HANFORD
AREA 200E
BUILDING No. 20
FIRM STAMP

CONTENT APPLICABLE TO ALARA? [X] YES [ ] NO
ADR NO. 24590-LAW-ADR-PR-02-002 REV: 1

RIVER PROTECTION PROJECT
WASTE TREATMENT PLANT
2435 STEVENS CENTER PLACE
RICHLAND, WA 99354

CONTRACT No: DE-AC27-01RV14136

PROCESS FLOW DIAGRAM LAW LIQUID EFFLUENT (SYSTEM RLD)

SCALE: NONE

24590-LAW-M5-V17T-00014

REV 6

"E" SIZE - 44x34
COMPUTER GENERATED - MANUAL DESIGN CHANGES NOT PERMITTED

A1117628

1/19/2016 12:09:54 PM

FORM E_30H-DGN 02/2006

ACCTED BY: bsawtre

c:\work\lawpm\drw\25223\24590-LAW-M5-V17T-00014.dgn

CORROSION EVALUATION

RLD-VSL-00005
SBS Condensate Collection Vessel

Appurtenances
RLD-AGT-00002, RLD-PMP-00003A/B

Contents of this document are Dangerous Waste Permit affecting

Results

Materials Considered

Material (UNS No.)	Acceptable Material
Type 304L (S30403)	
Type 316L (S31603)	X (top head only)
Al-6XN® 6% Mo (N08367)	X
Hastelloy® C-22® (N06022)	X
Hastelloy® C-276® (N10276)	X

Recommended Material Types:
Top head – Type 316 (max 0.030% C; dual certified)
Shell/bottom head – UNS N08367
Internals – UNS N08367
Cooling Jacket – Type 316 (max 0.030% C; dual certified)
Process nozzles* – UNS N08367, N06022, or N10276

The pH and high chloride concentrations require a 6% Mo alloy for body of vessel and Hastelloy® C-22®, C-276, or 6% Mo alloy for the process nozzles consistent with the connecting piping.

*Nozzles requiring higher alloys are identified on the Mechanical Datasheet, 24590-LAW-MVD-RLD-00006.

Minimum Corrosion Allowance: **0.040 inch (includes 0.024 inch corrosion allowance and 0.004 inch erosion allowance)**

Inputs and References

- Operating Temperature (°F) (max/nom) 166/132 (24590-LAW-MVC-RLD-00007)
- Design corrosion allowance (inch) 0 04 (24590-WTP-M0C-50-00004)
- Uniform corrosion allowance (inch) 0 024 (24590-WTP-M0C-50-00012)
- Uniform erosion allowance (inch) 0 004 (24590-WTP-M0C-50-00004)
- Location Room L-0126 (24590-LAW-P1-P01T-00002)
- Operating conditions are as stated in the applicable section of *WTP Process Corrosion Data - Volume 4* (24590-WTP-RPT-PR-04-0001-04)

Assumptions and Supporting Justifications (See Section 19 - References)

- Operating conditions presented on the Process Corrosion Data Sheet (PCDS) are conservative with respect to corrosion [10]
- RLD-VSL-00005 is equipped with spray nozzles for remote vessel washing They are supplied with demineralized water for interior surface wash-down for scheduled cleaning purposes, decontamination of the vessel for maintenance purposes, or to dilute the liquid inside the vessel To aid in decontamination of the vessel, chemicals can be added to the supplied water [1]
- The pH can be adjusted within the vessel via addition of NaOH, however, pH adjustment will typically be accomplished within the receiving vessels [1] Also, chemical adjustment in RLD-VSL-00004 will produce a condensate flow stream that is compliant with the design limits for both Type 316L and AL-6XN® used in the subsequent vessels and piping [3]
- Mixing of effluent in the SBS condensate collection vessel is accomplished by operating mechanical agitator The agitator is provided to properly mix the contents and to suspend solids accumulated in the vessel for transfer or sampling operations [1]

Operating Restrictions

- To protect against localized corrosion in the vessel and transfer piping, develop procedure to bring the vessel contents within the limits defined for a 6% Mo alloy (AL-6XN®) in 24590-WTP-RPT-M-11-002, *WTP Materials Localized Corrosion Design Limits*, in the event that temperature, pH, or chloride concentration exceeds those limits Procedures will include actions to bring the system within the limits
- Develop a procedure to control, at a minimum, cleaning, rinsing, and flushing of vessel and internals, as applicable
- Develop procedure to control lay-up and storage, includes both before plant is operational and during inactive periods after start-up
- Procedures are to be reviewed and accepted by MET prior to use

Concurrence _____
Operations

REV	DATE	REASON FOR REVISION	ORIGINATE	CHECK	REVIEW	APPROVE
4	9/26/16	Complete re-write, no rev bars shown New format Incorporate revised PCDS Add AEA notice Update references	Originator By Debbie Adler dladler Org Name MET Placed Sep 20 2016	Checked By A. Rangus aprangus Org Name Bechtel Placed Sep 13 2016 2:47 pm APRangus	RDLewis	TErwin

CORROSION EVALUATION

REVISION HISTORY

3	5/25/05	Update wear allowance based on 24590-WTP-RPT-M-04-0008	DLAdler	JRDivine	NA	APRangus
2	6/23/04	Incorporate new PCDS Add Section p – Inadvertent Addition of Nitric Acid	DLAdler	JRDivine	NA	APRangus
1	11/18/03	Update format and assoc. items Append updated MSDS Editorial changes Add DWP note	DLAdler	JRDivine	NA	APRangus
0	10/16/02	Initial Issue	DLAdler	JRDivine	SS	SMKirk
REV	**DATE**	**REASON FOR REVISION**	**PREPARER**	**CHECKER**	**MET**	**APPROVER**

Please note that source, special nuclear and byproduct materials, as defined in the Atomic Energy Act of 1954 (AEA), are regulated at the U S Department of Energy (DOE) facilities exclusively by DOE acting pursuant to its AEA authority DOE asserts, that pursuant to the AEA, it has sole and exclusive responsibility and authority to regulate source, special nuclear, and byproduct materials at DOE-owned nuclear facilities Information contained herein on radionuclides is provided for process description purposes only

This bound document contains a total of 15 sheets

CORROSION EVALUATION

Corrosion/Erosion Detailed Discussion

The SBS Condensate Collection Vessel (RLD-VSL-00005) normally receives condensate from LOP-SCB-00001/2, LOP-VSL-00001/2, and LOP-WESP-00001/2 drains via RLD-VSL-00004 The contents of RLD-VSL-00005 are normally transferred to TLP-VSL-00009A/B in the Pretreatment facility every 24 to 48 hours Transfers can be routed to PWD-VSL-00044 in the Pretreatment (PT) Facility and, in an off-normal scenario when the other vessels are unavailable, to the RLD-VSL-0003

Under the Direct-Feed Low Activity Waste (DFLAW) configuration, effluent will be transferred from RLD-VSL-00005 to the DEP system evaporator feed vessel, DEP-VSL-00002 During DFLAW operation, the routes to the PT Facility will be blanked

1 General/Uniform Corrosion Analysis

a Background

General or uniform corrosion is corrosion that is distributed uniformly over the surface of a material without appreciable localization This leads to relatively uniform thinning on sheet and plate materials and general thinning on one side or the other (or both) for pipe and tubing It is recognized by a roughening of the surface and usually by the presence of corrosion products The mechanism of the attack is an electrochemical process that takes place at the surface of the material Differences in composition or orientation between small areas on the metal surface create anodes and cathodes that facilitate the corrosion process

b Component-Specific Discussion

The vessel is exposed to submerged bed scrubber condensate from LOP-VSL-00001/2 and LOP-SCB-00001/2, expected to be alkaline and at 122 °F (140 °F maximum), as well as the contents of RLD-VSL-00004 (liquid from C3/C5 effluent drains) that are at 121 °F (150 °F maximum), but have pH from 1 to 11 At the normal conditions, temperature of the vessel can be as high as 166 °F and the pH can fall below 1 Based on these conditions, a 6% Mo alloy is recommended for the vessel bottom head and shell

2 Pitting Corrosion Analysis

Pitting is localized corrosion of a metal surface that is confined to a point or small area and takes the form of cavities Chloride is known to initiate pitting of stainless steel and related alloys in acid and neutral solutions Normally the vessel is to operate at about 132 °F at a pH below 1 (nominal expected to be pH 0 65) Maximum operating temperature is 166 °F based on the maximum temperature of SBS condensate received from the LOP system, the maximum temperature of the contents of RLD-VSL-00004, and allowing for the heat of agitation The vessel is operated such that conditions do not promote localized corrosion The solution in the vessel is not left stagnant Liquids are pumped from the vessel intermittently

The chemistry and operating conditions in this vessel do not fall within the limits established for a 6% Mo alloy (AL-6XN®) in Table 1-3 of *WTP Materials Localized Corrosion Design Limits* report, 24590-WTP-RPT-M-11-002 While the nominal temperature of 132 °F is within the limits, the maximum temperature exceeds the specified limit The pH below 1 is also not within the limits However, with the ability to adjust the pH of the process stream by addition of caustic to the upstream vessel, RLD-VSL-00004, a 6% Mo alloy (AL-6XN®) is deemed satisfactory For convenience, this comparison is documented on page 6 of this corrosion evaluation

3 Crevice Corrosion Analysis

Crevice corrosion is a form of localized corrosion of a metal or alloy surface at, or immediately adjacent to, an area that is shielded from full exposure to the environment because of close proximity of the metal or alloy to the surface of another material or an adjacent surface of the same metal or alloy Crevice corrosion is similar to pitting in mechanism Crevices in this vessel are limited by the design and fabrication practice All welding uses butt welds, and crevices are limited to wash ring hangers and other internals With the stated operating conditions, a 6% Mo alloy like UNS N08367 would be the minimum acceptable

The chemistry and operating conditions in this vessel do not fall within the limits established for a 6% Mo alloy (AL-6XN®) in Table 1-3 of 24590-WTP-RPT-M-11-002 However, with the ability to adjust the pH of the process stream by addition of caustic to the upstream vessel, RLD-VSL-00004, AL-6XN® is deemed satisfactory

4 Stress Corrosion Cracking Analysis

Stress corrosion cracking (SCC) is the cracking of a material produced by the combined action of corrosion and sustained tensile stress (residual or applied) Stress corrosion cracking (SCC) is the cracking of a material produced by the combined action of corrosion and sustained tensile stress (residual or applied) The exact amount of chloride required to cause stress corrosion cracking is unknown The exact amount of chloride required to cause stress corrosion cracking is unknown This is because the amount varies with temperature, metal sensitization, and the environment and also because chloride tends to concentrate under heat transfer conditions, by evaporation, and electrochemically during a corrosion process

With the ability to adjust the pH of the process stream by addition of caustic to the upstream vessel, RLD-VSL-00004, a 6% Mo alloy is deemed satisfactory despite the chemistry and operating conditions for this vessel that do not fall within the limits established for a 6% Mo alloy (AL-6XN®) in Table 1-3 of 24590-WTP-RPT-M-11-002 More corrosion-resistant alloys such as Hastelloy® C-22® and Hastelloy® C-276 (UNS N06022 and N10276), are suitable for internal piping or nozzles and are required for any high-temperature internal lines

CORROSION EVALUATION

5 End Grain Corrosion Analysis

End grain corrosion is preferential corrosion which occurs along the worked direction of wrought stainless steels exposed to highly oxidizing acid conditions End grain corrosion is exclusive to metallic product forms with exposed end grains from shearing or mechanical cutting and only occurs when exposed end grains are exposed to highly oxidizing acid conditions Such conditions are not present in this vessel, therefore, end grain corrosion is not a concern

6 Weld Corrosion Analysis

The welds used in the fabrication will follow the WTP specifications and standards for quality workmanship The materials selected for this fabrication are compatible with the weld filler metals and ASME/AWS practice Using the welding practices specified for the project, there should not be gross micro-segregation, precipitation of secondary phases, formation of unmixed zones, or volatilization of the alloying elements that could lead to localized corrosion of the weld The low carbon materials specified for WTP prevent base metal sensitization during welding Controls on the cover gas, heat input, and interpass temperature limit the heat tint Welding procedure review will confirm appropriate weld filler metal is specified Corrosion at welds is not considered a problem in the proposed environment No additional allowance is made for weld bead corrosion

7 Microbiologically Influenced Corrosion Analysis

Microbiologically influenced corrosion (MIC) refers to corrosion affected by the presence or activity, or both, of microorganisms Typically, with the exception of cooling water systems, MIC is not observed in operating systems The proposed operating conditions are suitable for microbial growth but the system is downstream of the main entry points of microbes, so the presence of MIC is unlikely

8 Fatigue/Corrosion Fatigue Analysis

Fatigue is the process of progressive localized permanent structural change occurring in a material subjected to fluctuating stresses less than the ultimate tensile strength of the material Corrosion fatigue is the process wherein a metal fractures prematurely under conditions of simultaneous corrosion and repeated cyclic loading at lower stress levels or fewer cycles than would be required to cause fatigue of that metal in the absence of the corrosive environment Corrosion fatigue is a not expected to be a problem if the piping and nozzles are properly supported

Corrosion fatigue is a function of the cyclic loading and corrosive conditions The vessel design is such that fatigue loads adhere to design code limitations Based on 24590-WTP-MVC-50-00009, *LAW, BOF, and LAB Vessel Cyclic Datasheet Inputs*, vessel temperatures experience no significant changes, therefore, there is no significant thermal cycling It can be stated that conditions with leads to fatigue or corrosion fatigue are not present in this vessel.

9 Vapor Phase Corrosion Analysis

Conditions in the vapor phase and at the vapor/liquid interface can be significantly different than those present in the liquid phase The corrosion evaluation of the vapor phase portion of the vessel considers the surface will be covered with a water vapor condensate and possibly droplets of splashed waste and rinse solution The vessel is fitted with wash rings that will be used periodically to wash down the interior. The vapor space corrosion rates are less than the immersed surfaces and the transport away from the surface will be less because of the no-flow conditions As compared to the corrosion in the immersion section, the corrosion rates in the vapor space are much lower Due to the less aggressive conditions in the vapor space, Type 316L is acceptable for the top shell Vapor phase corrosion is not a concern

10 Erosion Analysis

Erosion is the progressive loss of material from a solid surface resulting from mechanical interaction between that surface and a fluid, a multi-component fluid, or solid particles carried with the fluid Velocities are expected to be low Erosion allowance of 0 004 inch for Type 304L or type 316L components with low solids content (2 wt% or less) at low velocities (up to 12 ft/s) is based on 24590-WTP-M0C-50-00004, *Wear Allowance for WTP Waste Slurry Systems* Since AL-6XN® is as ductile and is stronger and harder than the 304L and 316L austenitic stainless steels, the erosive wear allowances used for the austenitic stainless steel are conservative when used for AL-6XN®

Because of the low pH, the agitator blade can be an ULTIMET® alloy but it is not considered necessary Using the same material for the agitator as the vessel is satisfactory

Conditions that lead to localized erosion are not present in this vessel so no localized erosion allowance is necessary

11 Galling of Moving Surfaces Analysis

Where two metals are moving in contact with each other without lubrication, there is a risk of damage to their surfaces No moving unlubricated surfaces are present within the vessel, therefore, galling is not a concern

CORROSION EVALUATION

12 Fretting/Wear Analysis

Fretting corrosion refers to corrosion damage caused by a slight oscillatory slip between two surfaces Similar to galling but at a much smaller movement, the corrosion products and metal debris break off and act as an abrasive between the surfaces, producing a classic three-body wear problem. This damage is induced under load and repeated relative surface motion Conditions which lead to fretting are not present in this vessel, therefore, fretting is not a concern

13 Galvanic Corrosion Analysis

Galvanic corrosion is accelerated corrosion caused by the potential difference between the two dissimilar metals in an electrolyte One material becomes the anode and the other the cathode. Corrosion occurs on the anode material at the interface where the potential gradient is the greatest. A potential difference of more than 200 mV is needed for a sufficient driving force to initiate galvanic corrosion The potential difference for any combination of alloys used in the vessel design is not sufficient for galvanic currents to overcome the passive protective film For such alloys, there is negligible potential difference, so galvanic corrosion is not a concern

14 Cavitation Analysis

Cavitation is the formation and rapid collapse of cavities or bubbles of vapor or gas within a liquid resulting from mechanical or hydrodynamic forces Cavitation is typically associated with pumps and orifice plates, not vessels The agitator blade is susceptible to cavitation For this reason, agitators are replaceable components. WTP design limits conditions which lead to cavitation; therefore, cavitation is not a concern

15 Creep Analysis

Creep is time-dependent strain occurring under stress and is described as plastic flow, yielding at stresses less than the yield strength. Creep is only experienced in plants operating at high temperatures. Temperatures much greater than one half the absolute melting temperature of the alloy are necessary for thermally activated creep to become a concern The vessel operating and design temperatures are too low to lead to creep; therefore, creep is not a concern

16 Inadvertent Nitric Acid Addition

At this time, the design does not provide for the presence of nitric acid reagent in this system Additionally, the vessel sees low pH under normal operating conditions. Addition of nitric acid into the system would require operator intervention to complete the routing Nitric acid is a known inhibitor solution for alloys used on the Project The presence of nitric acid is not a concern for these alloys; especially at the operating temperatures listed.

17 Conclusion and Justification

The conclusion of this evaluation is that, based on the normal operating conditions, RLD-VSL-00005 can be fabricated from a 6% Mo alloy (bottom head) and Type 316L stainless steel (top head) and is capable of providing 40 years of service. Based on the expected operating conditions, the 6% Mo alloy is expected to be satisfactorily resistant to uniform and localized corrosion Based on 24590-WTP-M0C-50-00004, the probable loss due to uniform corrosion over 40 years is 0 024 inch, loss due to uniform erosion over 40 years is 0 004 inch A design corrosion allowance of 0 04 inch is recommended and exceeds the corrosion and erosion allowances identified in 24590-WTP-M0C-50-00004

Based on comparison of the process conditions documented in 24590-WTP-RPT-PR-04-0001-04, against the limits for AL-6XN® (6% Mo alloy) documented in 24590-WTP-RPT-M-11-002, *WTP Materials Localized Corrosion Design Limits,* the PCDS values, which take into account conditions at contract maximum values, do not currently fall within the applicable limits. However, chemical adjustment in the upstream vessel, RLD-VSL-00004, will produce a condensate flow stream that is compliant with the design limits for AL-6XN®.

No localized erosion of the vessel is expected, so no additional localized protection is required

18 Margin

The uniform corrosion allowance for the vessel is 0 04 inch based on the range of inputs, system knowledge, handbooks, literature, and engineering judgment/experience The service conditions described above result in a predicted uniform loss due to uniform corrosion and erosion of 0.028 inches The specified minimum corrosion allowance exceeds the minimum required corrosion allowance specified in the input calculations, therefore, margin is provided. The uniform corrosion design margin for the operating conditions is sufficient to expect a 40 year operating life and is justified in the referenced calculations

The localized corrosion margin is based on comparison of the process conditions documented in 24590-WTP-RPT-PR-04-0001-04 against the limits for Type 316L and AL-6XN® documented in 24590-WTP-RPT-M-11-002 The PCDS values, which take into account conditions at contract maximum values, are within the applicable limits.

The erosion allowance of 0 004 inch is based on 24590-WTP-M0C-50-00004, *Wear Allowance for WTP Waste Slurry Systems* The recommended uniform erosion allowance provides sufficient protection for erosion of the vessel walls. The margin in the erosive wear allowance is contained in the referenced calculation (24590-WTP-M0C-50-00004)

CORROSION EVALUATION

The maximum operating parameters for this vessel are defined in the PCDS The normal operating constituent concentrations and operating conditions shown in the PCDS are not within the range allowed in 24590-WTP-RPT-M-11-002 The SBS Condensate Collection Vessel, RLD-VSL-00005, is protected from localized corrosion (pitting, crevice, and stress corrosion) chemical adjustment in the upstream vessel, RLD-VSL-00004, which will produce a condensate flow stream that is compliant with the design limits for AL-6XN®

MATERIALS LOCALIZED CORROSION DESIGN LIMITS – AL-6XN®				
		Temperature (°F)	pH	Chloride (ppm)
DESIGN LIMIT		150 °max	1 to 5	25,000
RLD-VSL-00005				
Discharge Effluent to TLP-VSL-00009A/B (RLD21)	Discharge Effluent to DEP-VSL-00002[2] (RLD21)	166	0 65[3]	4469
Inlet Vessels to RLD-VSL-00005		Temperature (°F)	pH	Chloride (ppm)
DESIGN LIMIT		150 °max	1 to 5	25,000
SBS Condensate from LOP-SCB-00001/2 (LOP05/LOP01)		140	0 72	3677
Suspect radioactive material from RLD-VSL-00004 (RLD35)		157[1]	0 32[3]	10375

Notes for this table:

[1] PCDS temperature for the RLD-VSL-00004 is from 24590-LAW-MVC-RLD-00009, *Process Data Input for LAW C3/C5 Drains/Sump Collection Vessel (RLD-VSL-00004) and Transfer Pumps (RLD-PMP-00002A/B)* Bounding temperature of 157 °F is based on condensate received from the LOP-WESP-00001&2 at 121 °F including a margin of 36 °F (20 °C) The nominal temperature of RLD-VSL-00004 of 121 °F is within the limits for AL-6XN® through the full pH range.

[2] DFLAW configuration based on 24590-BOF-RPT-PR-15-001, Direct Feed LAW Process Corrosion Data Under DFLAW configuration, the PT Facility transfer routes are blanked

[3] 24590-LAW-M6N-SHR-00019 has been processed to add sodium hydroxide (NaOH) to RLD-VSL-00004 to make the solution compliant to the WTP Materials Localized Corrosion Design Limits Chemical adjustment in RLD-VSL-00004 will produce a condensate flow stream that is compliant with the design limits for both Type 316L and AL-6XN® used in the subsequent vessels, which includes RLD-VSL-00005.

Inlet vessels to RLD-VSL-00004 based on 24590-WTP-RPT-PR-04-0001-04, Section 6 9, and Figure 13.

References sources for this table:

1 Design limits - 24590-WTP-RPT-M-11-002, Table 1-3
2. RLD-VSL-00005 (RLD21) - 24590-WTP-RPT-M-11-002, Figure C-48
3 RLD-VSL-00004 (RLD35) – 24590-WTP-RPT-PR-04-0001-02, Figure C-1
4 LOP-SCB-00001/2 (LOP05) – 24590-WTP-RPT-PR-04-0001-04, Figure C-7

CORROSION EVALUATION

19 References

1 24590-BOF-RPT-PR-15-001, *Direct Feed LAW Process Corrosion Data*
2 24590-LAW-3ZD-RLD-00001, *System Design Description - LAW Facility Radioactive Liquid Waste Disposal (RLD) System Design Description*
3 24590-LAW-M6N-SHR-00019, *Caustic Addition to RLD-VSL-00004*
4 24590-LAW-MVC-RLD-00007, *Process Data Input for LAW SBS Condensate Collection Vessel. RLD-VSL-00005 and Discharge Pumps (RLD-PMP-00003 A/B)*
5 24590-LAW-MVD-RLD-00006, *Mechanical Data Sheet 24590-LAW-MV-RLD-VSL-00005 - SBS Condensate Collection Vessel*
6 24590-LAW-P1-P01T-00002, *LAW Vitrification Building General Arrangement Plan at EL. 3 Feet-0 Inches*
7 24590-WTP-M0C-50-00004, *Wear Allowance for WTP Waste Slurry Systems with ECCN 24590-WTP-M0C-50-00012*
8 24590-WTP-RPT-M-11-002, *WTP Vessel Localized Corrosion Limit Analysis Report*
9 24590-WTP-RPT-PR-04-0001-02, *WTP Process Corrosion Data – Volume 2*
10 24590-WTP-RPT-PR-04-0001-04, *WTP Process Corrosion Data – Volume 4*
11 Davis, JR (Ed), 1987, *Corrosion, Vol 13*, In "Metals Handbook", ASM International, Metals Park, OH 44073
12. Phull, BS, WL Mathay, & RW Ross, 2000, *Corrosion Resistance of Duplex and 4-6% Mo-Containing Stainless Steels in FGD Scrubber Absorber Slurry Environments*, Presented at Corrosion 2000, Orlando, FL, March 26-31, 2000, NACE International, Houston TX 77218
13 Sedriks, AJ, 1996, *Corrosion of Stainless Steels*, John Wiley & Sons, Inc , New York, NY 10158

Additional Reading

- 24590-LAW-3YD-RLD-00001, *System Description for the Law Radioactive Liquid Waste Disposal (RLD) System*
- 24590-LAW-M6-RLD-00001, *P&ID-LAW Radioactive Liquid Waste Disposal System Plant Wash & SBS Condensate Collection*
- 24590-WTP-RPT-M-04-0008, *Evaluation Of Stainless Steel Wear Rates In WTP Waste Streams At Low Velocities*
- Berhardsson, S, R Mellstrom, and J Oredsson, 1981, *Properties of Two Highly Corrosion Resistant Duplex Stainless Steels*, Paper 124, presented at Corrosion 81, NACE International, Houston, TX 77218
- Davis, JR (Ed), 1994, *Stainless Steels*, In ASM Metals Handbook, ASM International, Metals Park, OH 44073
- Hamner, NE, 1981, *Corrosion Data Survey*, Metals Section, 5th Ed, NACE International, Houston, TX 77218
- Jones, RH (Ed), 1992, *Stress-Corrosion Cracking*, ASM International, Metals Park, OH 44073
- Koch, GH, 1995, *Localized Corrosion in Halides Other Than Chlorides*, MTI Pub No 41, Materials Technology Institute of the Chemical Process Industries, Inc, St Louis, MO 63141
- Speidel, MO, 1981, *Stress Corrosion Cracking of Stainless Steels in NaCl Solutions*, Met Trans A, 12A, 779-789
- Uhlig, HH, 1948, *Corrosion Handbook*, John Wiley & Sons, New York, NY 10158
- Van Delinder, LS (Ed), 1984, *Corrosion Basics*, NACE International, Houston, TX 77084
- Wilding, MW and BE Paige, 1976, *Survey on Corrosion of Metals and Alloys in Solutions Containing Nitric Acid*, ICP-1107, Idaho National Engineering Laboratory, Idaho Falls, ID

CORROSION EVALUATION

PROCESS CORROSION DATA SHEET (extract)

Component(s) (Name/ID #) Submerged Bed Scrubber (SBS) Condensate Collection Vessel (RLD-VSL-00005)

Facility LAW

In Black Cell? No

Chemicals	Unit	Stream ID RLD21 AQUEOUS
Cations (ppm)		
Al^{+3} (Aluminum)	ppm	440
Fe^{+3} (Iron)	ppm	509
Hg^{+2} (Mercury)	ppm	0
Pb^{+2} (Lead)	ppm	24
Anions (ppm)		
Cl^- (Chloride)	ppm	4469
CO_3^{-2} (Carbonate)	ppm	0
F^- (Fluoride)	ppm	7571
NO_3^- (Nitrate)	ppm	0
NO_2^- (Nitrite)	ppm	0
PO_4^{-3} (Phosphate)	ppm	29
SO_4^{-2} (Sulfate)	ppm	2708
$OH(aq)^-$	ppm	697
$OH(s)^-$	ppm	0
pH		0.65
Suspended Solids	wt%	0
Temperature	°F	166.00
Liquid Density*	lb/ft3	NR

* Liquid density not reported

CORROSION EVALUATION

Figure C- 48 RLD-VSL-00005 Aqueous PCDS
Vessel : RLD-VSL-5

	Stream ID			
	RLD35	LOP05_1	LOP05_2	RLD21
Properties				
Suspended Solids [wt %]	0	0	0	0
Total Solids [wt %]	4.31	4.70	4.70	1.75
Sodium Molarity [M]	5.92E-01	5.58E-01	5.58E-01	2.00E-01
Relative Humidity [%]	n/a	n/a	n/a	n/a
pH	9.16	9.17	9.17	9.65
Anti-Foam Agent [ppm]	0	5.37E-07	5.37E-07	1.23E-07
TOC [kg/L]	3.39E-01	1.09E-03	1.09E-03	2.71E-03
Pressure [bar]	0.96	0.89	0.90	0.99
Temperature [C]	40.83	50.00	50.00	74.44
Temperature [F]	105.49	122.00	122.00	166.00
Water Flow Rate [kg/hr]	188.61	359.01	359.01	904.66
Total Aqueous Flow Rate [kg/hr]	195.06	376.71	376.71	931.87
Total Flow Rate [kg/hr]	1.95E+02	3.77E+02	3.77E+02	9.32E+02
UserNote	VIT LIQUID C3/C5 Drain Sump Effluent	VIT LIQUID LAW Liquid to RLD-VSL-00005	VIT LIQUID LAW Liquid Purge from LAW_2 Scrubber Liquid to RLD-VSL-00005	VIT LIQUID LAW SBS/WESP Condensate
AQUEOUS				
Cations (ppm)				
Ag+	0	0	0	0
Al+3	3	105	105	440
Au+3	0	0	0	0
As+5	0	0	0	0
B+3	2	398	398	1640
Ba+2	0	0	0	0
Be+2	0	0	0	0
Bi+3	0	0	0	0
Ca+2	5	71	71	436
Cd+2	0	0	0	0
Ce+4	0	0	0	0
Co+2	0	0	0	0
Cr+3	0	0	0	0
Cr+6	26	38	38	151
Cs+	0	0	0	0
Cu+2	0	0	0	0
Eu+3	0	0	0	0
Fe+2	0	0	0	0
Fe+3	4	121	121	509
H+	691	662	662	284
Hg+2	0	0	0	0
K+	146	160	160	344
La+3	0	0	0	0
Li+	59	117	117	1343
Mg+2	1	2	2	19
Mn+4	0	0	0	0
Mo+6	0	0	0	0
Na+	6621	12797	12797	4587
Nd+3	0	0	0	0
Ni+2	0	1	1	9
Pb+2	0	0	0	24
Pd+2	0	0	0	0
Pr+4	0	0	0	0
Pu+4	0	0	0	0
Ra+2	0	0	0	0
Rb+	0	0	0	0
Rh+3	0	0	0	0
Ru+4	0	0	0	0
Sb+3	0	0	0	0
Se+4	1	3	3	5
Sr+4	12	353	353	841
Sr+2	0	0	0	0
Ta+5	0	0	0	0
Tc+4	0	0	0	0
Te+4	0	0	0	0
Th+4	0	0	0	1
Ti+4	0	43	43	179
Tl+3	0	3	3	3
U+4	0	0	0	0
V+5	0	0	0	0
W+6	0	0	0	0
Y+3	0	0	0	0
Zn+2	13	134	134	570
Zr+4	1	7	7	31
Anions (ppm)				
HCO3-	0	0	0	0
C2O4-2	0	0	0	0
Cl-	15053	10287	10287	4469
CN-	0	0	0	0
CO3-2	0	0	0	0
F-	10413	21331	21331	7571
H2PO4-	0	0	0	0
HCrO4-2	0	0	0	0
H3AsO4-	0	0	0	0
HCO3-	0	0	0	0
HPO4-2	0	0	0	0
HSO3-	0	0	0	0
HSO4-	0	0	0	0
I-	0	0	0	0
IO3-	0	0	0	0
NH4+	0	0	0	0
NO2-	0	0	0	0
NO3-	0	0	0	0
O-2	0	0	0	0
O2-2	0	0	0	0
OH(aq)-	0	0	0	697
OH(s)-	0	0	0	0
PO4-3	0	4	4	29
SO3-2	0	0	0	0
SO4-2	6	328	328	2708
Organics (ppm)				
AFA_DOIP	0	0	0	0
AFA_NVOC	0	0	0	0
NVOC	0	0	0	0
Sucrose	0	0	0	0
SVOC	3	9	9	287
VOC	0	0	0	0

GENERAL NOTE FOR USE OF PCDS:

- *The information provided by the PCDS report is intended solely for use in support of the vessel material selection process and Corrosion Evaluations. The inputs, assumptions, and computational engineering models used in generating the results presented herein are specific to this effort. Use of the information presented herein for any other purpose will require separate consideration and analysis to support justification of its use for the desired, alternative purpose.*
- *The process descriptions in this report cover routine process operations and non-routine (infrequent) process operations, when such exist, that could impact corrosion or erosion of process equipment.*
- *The data in the non-shaded columns of the PCDSs has NOT been adjusted to comply with the highest expected, vessel-specific operational conditions.*
- *The process descriptions provided in this report are for general information and reflective of the corrosion engineer's analysis for transparency, the information is current only at the time this document is issued. These process descriptions should not be referenced for design.*

6.9 Submerged Bed Scrubber (SBS) Condensate Collection Vessel (RLD-VSL-00005)

6.9.1 Description of Vessel/Equipment

The SBS Condensate Collection Vessel (RLD-VSL-00005) normally receives condensate from the Submerged Bed Scrubbers (LOP-SCB-00001/2), the Melter 1/2 SBS Condensate Vessels (LOP-VSL-00001/2), and WESP (LOP-WESP-00001/-00002) drains via the C3/C5 Drains/Sump Collection Vessel (RLD-VSL-00004). The contents of RLD-VSL-00005 are normally transferred to the SBS Condensate Receipt Vessels (TLP-VSL-00009A/B) in the PT facility every 24 to 48 hours. Transfers can be routed to the PT Plant Wash Vessel (PWD-VSL-00044) and, in an off-normal scenario when the other vessels are unavailable, to the Plant Wash Vessel (RLD-VSL-0003).

Figure 13 provides a sketch of the input and output arrangement of streams for RLD-VSL-00005. Streams that are not primary routes are represented with dashed lines.

Figure 13 RLD-VSL-00005 Sketch

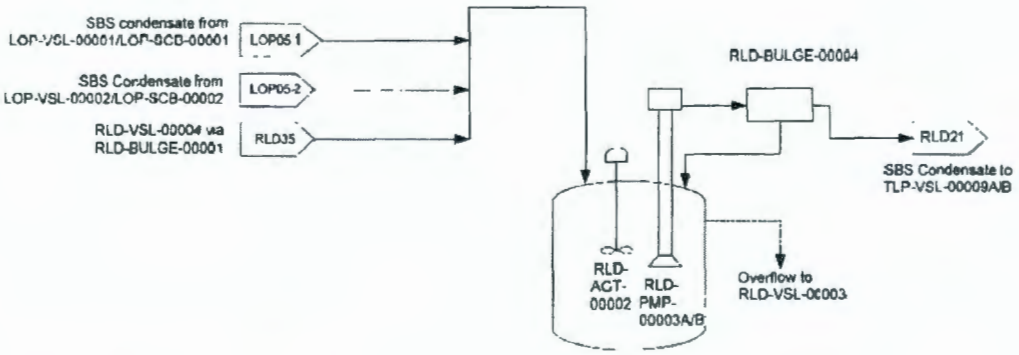

6.9.2 System Functions

The process functions of this vessel are as follows:

- Receive Liquid Effluents
- Store Liquid Effluents
- Mix Liquid Effluents
- Transfer Collected Effluents

This vessel performs additional system functions beyond the process functions, but these are outside the scope of this document. The non-process functions are not discussed any further in this document. However, they are listed below for completeness:

- Confine Hazardous Materials
- Flush System Components
- Report System Conditions

6.9.3 Description of Process Functions

6.9.3.1 Receive Liquid Effluents

The following process streams taken from Process Flow Diagram 24590-LAW-M5-V17T-00014 and associated drawing change notices (DCNs) are inputs to RLD-VSL-00005:

- LOP05 - SBS condensate from LOP-VSL-00001/2 & LOP-SCB-00001/2
- RLD35 - RLD-VSL-00004 via RLD-BULGE-00001

6.9.3.1.1 LOP05 - SBS condensate from LOP-VSL-00001/2 & LOP-SCB-00001/2

Stream LOP05-1 is the submerged bed scrubber condensate from the LOP-VSL-00001/LOP-SCB-00001. Off-gas from LMP-MLTR-00001 is processed through LOP-SCB-00001 and the scrubber condensate is sent to LOP-VSL-00001 then recycled back through the LOP-SCB-00001. The LOP-VSL-00001/LOP-SCB-00001 condensate effluent is then subsequently transferred to RLD-VSL-00005.

Stream LOP05-2 is also the submerged bed scrubber condensate from the second LAW melter train LOP-VSL-00002/LOP-SCB-00002. Off-gas from LMP-MLTR-00002 is processed through LOP-SCB-00002 and the scrubber condensate is sent to LOP-VSL-00002 then recycled back through the LOP-SCB-00002. The LOP-VSL-00002/LOP-SCB-00002 condensate effluent is then subsequently transferred to RLD-VSL-00005.

Molarity
The sodium concentration of LOP05 may range from 0.1 to 0.2 M (24590-WTP-DB-PET-09-001, Table B-19, Ref. 7.1.1(3)). The nominal sodium concentration is the average of this range, 0.15 M and the upper sodium concentration for stream LOP05 is 0.2 M.

Temperature
The nominal temperature of stream LOP05 ranges from 121 to 122°F (24590-WTP-DB-PET-09-001, Table B-19, Ref. 7.1.1(3)). The minimum temperature is 104°F and the maximum is 140°F (24590-LAW-MVC-LOP-00001, Section 6.1, Ref. 7.1.4(21)). Therefore, 122°F is considered nominal temperature and 140°F is considered the highest expected temperature for stream LOP05

Solids Concentration
The solids will range from 0.2 to 0.3 wt% UDS (24590-WTP-DB-PET-09-001, Table B-19, Ref. 7.1.1(3)). The nominal solids concentration for stream LOP05 is the average of this range, 0.25 wt% UDS.

Slurry Density
The minimum and maximum density of stream LOP05 is 62.2 lb/ft^3 to 62.8 lb/ft^3, respectively (24590-LAW-MVC-LOP-00001, Section 7.6.2, Ref. 7.1.4(21)). The nominal slurry density is the average of this range, 62.5 lb/ft^3.

Slurry pH
Slurry pH for stream LOP05 ranges from 7 to 13 (24590-WTP-DB-PET-09-001, Table B-19, Ref. 7.1.1(3)). The resulting pH for this stream will be provided in the corrosion data sheet.

6.9.3.1.2 RLD35 - C3/C5 Drains/Sump Collection Vessel (RLD-VSL-00004) contents

Stream RLD35 is the contents of the C3/C5 Drains Sump Collection Vessel (RLD-VSL-00004), which is liquid drains from the Wet Electrostatic Precipitators (LOP-WESP-00001/00002), and drains from vent headers and floor drains in the C3/C5 areas. The unscheduled C3/C5 drains collected in the C3/C5 Drains/Sump Collection Vessel (RLD-VSL-00004) can be transferred to the Plant Wash Vessel (RLD-VSL-00003) via RLD-BULGE-00001 as required in order to empty the vessel.

Molarity
Since there is no chemical adjustment of the contents of RLD-VSL-00004 prior to transfer to vessel RLD-VSL-00003/5, the sodium molarity is not a controlled parameter for the process stream RLD35. However, the maximum concentration of sodium is 0.2 molar, as determined by the Process Inputs Basis of Design (24590-WTP-DB-PET-09-001, Appendix B, Table B-26, Ref. 7.1.1(3)).

Temperature
RLD-VSL-00004 collects effluent drains from the C3/C5 areas within the LAW Facility. The minimum temperature for both an internal unoccupied C3 area and internal C5 area is 59°F (24590-WTP-DB-ENG-01-001, Table 12-1, Ref. 7.1.1(2)). However, RLD-VSL-00004 also receives condensate from the WESPs at a nominal temperature of 121°F (24590-LAW-MVC-RLD-00009, Section 7.3, Ref. 7.1.4(24)). The vessel's nominal operating temperature is the same as that of the condensate entering the vessel at 121°F (24590-LAW-MVC-RLD-00009, Section 7.3, Ref. 7.1.4(24)). The maximum temperature of the WESP off-gas discharge is 126°F (24590-LAW-MEC-RLD-00001, Section 2.16, Ref. 7.1.4(18)). The vessel's design temperature is based on adding a margin of 24°F above the maximum WESP offgas temperature (126°F) (24590-LAW-MEC-RLD-00001, Section 7.2.2, Ref. 7.1.4(18)). Therefore, the minimum temperature is 59°F, nominal temperature is 121°F, and the maximum temperature is 150°F.

Solids Concentration
The normal concentration of suspended solids for process stream RLD35 (24590-WTP-DB-PET-09-001, Appendix B, Table B-26, Ref. 7.1.1(3)) is approximately 0 wt% or negligible UDS. Note that vessel RLD-VSL-00004 normally collects C3/C5 floor drains, WESP drains from LOP-WESP-00001/2, and effluent from the vessel vent header drain, which are expected to have negligible suspended solids.

Liquid Density
The minimum, nominal, and maximum densities of stream RLD35 are 61.0 lb/ft^3, 61.7 lb/ft^3, and 62.4 lb/ft^3, respectively (24590-LAW-MVC-RLD-00009, Section 7.5.2, Ref. 7.1.4(24)). However, the maximum density of stream RLD35 is 62.5 lb/ft^3, as determined by the Process Inputs Basis of Design (24590-WTP-DB-PET-09-001, Appendix B, Table B-26, Ref. 7.1.1(3)). Therefore, the minimum, nominal, and maximum densities of stream RLD35 are 61.0 lb/ft^3, 61.7 lb/ft^3, and 62.5 lb/ft^3, respectively.

Liquid pH
Liquid pH of stream RLD35 will normally range from 1.0-11.0 (24590-WTP-DB-PET-09-001, Appendix B, Table B-26, Ref. 7.1.1(3)).

6.9.3.2 Store Liquid Effluents

The SBS Condensate Collection Vessel (RLD-VSL-00005) collects submerged bed scrubber condensate from LOP-SCB-00001/2 & LOP-VSL-00001/2. The contents of the SBS Condensate Collection Vessel (RLD-VSL-00005) are normally transferred to the LAW SBS Condensate Receipt Vessels (TLP-VSL-00009A/B) in the PT Facility every 24 to 48 hours.

6.9.3.3 Mix Liquid Effluents

Mixing within the SBS Condensate Collection Vessel is accomplished by operating mechanical agitator RLD-AGT-00002. The agitator is provided to properly mix the contents and to suspend solids accumulated in the vessel for transfer or sampling operations.

6.9.3.4 Transfer Collected Effluents

The following process streams taken from Process Flow Diagram 24590-LAW-M5-V17T-00014 (Ref. 7.1.3(19)) and associated DCNs are outputs from RLD-VSL-00005:

- RLD21 - Discharge effluent to TLP-VSL-00009A/B
- Overflow to RLD-VSL-00003

6.9.3.4.1 RLD21 - Discharge effluent to TLP-VSL-00009A/B

Stream RLD21 is the collected submerged bed scrubber condensate from LOP-VSL-00001/2 & LOP-SCB-00001/2 that is normally discharged to the LAW SBS Condensate Receipt Vessels (TLP-VSL-00009A/B) in the PT Facility via RLD-BULGE-00004.

The contents of the SBS Condensate Collection Vessel (RLD-VSL-00005) are normally transferred to the LAW SBS Condensate Collection Vessel (TLP-VSL-00009A/B) in the PT Facility every 24 to 48 hours.

Molarity
The sodium concentration in stream RLD21 ranges between 0.1 M and 0.2 M (24590-WTP-DB-PET-09-001, Table B-25, Ref. 7.1.1(3)).

Temperature
The minimum, normal, and maximum temperatures for stream RLD21 are 104, 132 and 166°F respectively (24590-LAW-MVC-RLD-00007, Section 8, Sheet No. 14, Ref. 7.1.4(22)).

Solids Concentration
The solids concentration in stream RLD21 is below 10 g/L, which is approximately less than 1 wt% UDS (24590-LAW-MVC-RLD-00007, section 6.1.5a, Ref. 7.1.4(22)).

Liquid Density
The minimum, normal, and maximum slurry density for stream RLD21 (with low solids content) is 61.7, 62.5, and 62.8 lb/ft^3 respectively (24590-LAW-MVC-RLD-00007, Section 8, Sheet No. 14., Ref. 7.1.4(22)).

Liquid pH
The range of slurry pH reported in the PIBOD for stream RLD21 is 2.0 to 12.5 (24590-WTP-DB-PET-09-001, Table B-25, Ref. 7.1.1(3)). Slurry pH is not controlled for stream RLD21, as RLD-VSL-00005 (where stream RLD21 originates) does not have the capability to neutralize. The resultant pH for stream RLD21 will be provided in the corrosion data sheet.

6.9.3.4.2 Overflow to RLD-VSL-00003

RLD-VSL-00005 overflows through a 6 inch line to the Plant Wash Vessel RLD-VSL-00003. The overflow line has connections for flushing capability to facilitate cleaning, washing, decontaminating or unplugging the line, and a check valve to prevent the spread of contamination to the DIW utility system. The overflow line is designed to be free-draining, without traps and seals.

6.9.4 Process Modes

6.9.4.1 Normal Operations

Based on the assessment of streams frequently transferred in and out of RLD-VSL-00005, the following process modes are considered:

- RLD21 - Discharge effluent to TLP-VSL-00009A/B (via RLD-BULGE-00004)

RLD21 is the effluent from the SBS Condensate Collection Vessel, RLD-VSL-00005 to vessels TLP-VSL-00009A/B in the Pretreatment Facility. RLD-VSL-00005 receives effluent streams from the LAW SBS condensate vessels LOP-VSL-00001 and LOP-VSL-00002, and can receive WESP condensate from RLD-VSL-00004.

Section 6.9.5.1 summarizes in tabular form the process mode characterized by stream RLD21.

6.9.4.2 Infrequent Operations

Based on the assessment of streams infrequently transferred in and out of RLD-VSL-00005, the following process mode is considered:

- Decontamination of RLD-VSL-00005 via spray nozzles (RLD-NOZ-00004/5)

Section 6.9.5.2 summarizes in tabular form the infrequent process mode characterized by decontamination of RLD-VSL-00005.

6.9.5 Summary of Processing Conditions for RLD-VSL-00005

6.9.5.1 Normal Operations

The following table summarizes the normal processing mode for RLD-VSL-00005, where the various waste streams collected in RLD-VSL-00005 consist primarily of submerged bed scrubber bottoms from LOP-VSL-00001/LOP-SCB-00001 and LOP-VSL-00002/LOP-SCB-00002. Transfers can be routed to the Pretreatment Plant Wash Vessel (PWD-VSL-00044) and, in an off-normal scenario when the other vessels are unavailable, to the Plant Wash Vessel (RLD-VSL-00003).

	Na Molarity			Temperature (°F)			Weight % UDS	
Stream Number	Low	Norm.	Upper	Low	Norm.	Upper	Norm.	Upper
RLD21	0.1	N/A	0.2	104	132	166	N/A	< 1

CORROSION EVALUATION

6.9.5.2 Infrequent Operations

The SBS Condensate Collection Vessel (RLD-VSL-00005) is equipped with two spray nozzles, RLD-NOZ-00004/5, for remote vessel washing. Demineralized water is normally supplied to the spray nozzles for interior surface washdown for scheduled cleaning purposes, decontamination of the vessel for maintenance purposes, or to dilute the liquid inside the vessel. In order to aid decontamination of the vessel, chemicals (e.g. sodium hydroxide) can be added to the supplied demineralized water via a wash cart, however, pH adjustment will typically be accomplished within the receiving vessels, TLP-VSL-00009A/B.

	NaOH Molarity		Temperature (°F)		Weight % UDS	
Stream Number	Normal	Upper	Normal	Upper	Normal	Upper
Spray Nozzles (RLD-NOZ-00004/5)	0.1	2	77	95	0	0

Note: Caustic (sodium hydroxide) is delivered at 19M (50wt%) and diluted for a number of duties (24590-WTP-DB-ENG-01-001, Section 6.4, Ref. 7.1.1(2))

ISSUED BY
RPP-WTP PDC

24590-LAW-N1D-RLD-00005
Rev. 5

CORROSION EVALUATION

RLD-VSL-00003
Plant Wash Vessel

Appurtenances
RLD-AGT-00001

Contents of this document are Dangerous Waste Permit affecting

Results

Materials Considered:

Materials Considered (UNS No.)	Acceptable Materials
Type 304L (S30403)	
Type 316L (S31603)	X (top head only)
Al-6XN 6% Mo (N08367)	X
Hastelloy® C-22® (N06022)	X
Hastelloy® C-276 (N10276)	X

Recommended Material Types:
Top head – Type 316 (max 0.030% C; dual certified)
Top head nozzles (with dip tubes) – UNS N08367, N06022, or N10276
Top head nozzles (no dip tubes) – Type 316 (max 0.030% C; dual certified)
Shell/shell nozzles – UNS N08367, N06022, or N10276
Bottom head – UNS N08367
Internals excl. sprayers – UNS N08367
Sprayers – Type 316 (max 0.030% C; dual certified)
Agitator – UNS N08367 or Ultimet®

Vessel upgraded to 6% Mo alloy to serve as a back-up for RLD-VSL-00005.

Minimum Corrosion Allowance: **0.04 inch (includes 0.024 inch corrosion allowance and 0.016 inch erosion allowance)**

Inputs and References

- Operating Temperature (°F) (nom/max) 86/166 (24590-LAW-MVC-RLD-00008)
- Design corrosion allowance (inch) 0 04 (24590-WTP-M0C-50-00004)
- Uniform corrosion allowance (inch) 0 024 (24590-WTP-M0E-50-00012)
- Uniform erosion allowance (inch) 0 016 (24590-WTP-M0C-50-00004)
- Maximum solids 3 wt% (24590-WTP-DB-PET-09-001)
- Location Room L-0126, effluent cell (24590-LAW-P1-P01T-00002)
- Operating conditions are as stated in the applicable section of *WTP Process Corrosion Data - Volume 4* (24590-WTP-RPT-PR-04-0001-04)

Assumptions and Supporting Justifications (Refer to Section 19 - References)

- Operating conditions presented on the Process Corrosion Data Sheet (PCDS) are conservative with respect to corrosion [12]
- RLD-VSL-00003 is equipped with spray nozzles for remote vessel washing They are supplied with demineralized water for a wash-down of the interior surface for scheduled cleaning purposes, decontamination of the vessel for maintenance purposes, or dilution of the liquid inside the vessel To aid in decontamination of the vessel, chemicals can be added to the supplied water [1]
- Design includes capability of sampling contents of the vessel Adjustment of pH can be accomplished within the vessel via addition of NaOH, although pH adjustment will typically be accomplished within the receiving vessel [1]

Operating Restrictions

- To protect against localized corrosion in the vessel and transfer piping, develop procedure to bring the vessel contents within the limits defined for 6% Mo alloy (AL-6XN®) in 24590-WTP-RPT-M-11-002, *WTP Materials Localized Corrosion Design Limits*, in the event that temperature, pH, or chloride concentration exceeds those limits
- Develop a procedure to control, at a minimum, cleaning, rinsing, and flushing of vessel and internals, as applicable
- Develop a procedure to control lay-up and storage, includes both before plant is operational and during inactive periods after start-up
- Procedures are to be reviewed and accepted by MET prior to use

Concurrence Operations

REV	DATE	REASON FOR REVISION	ORIGINATE	CHECK	REVIEW	APPROVE
5	9/26/16	Complete re-write; no rev bars shown New format Add AEA notice Update references Incorporate revised PCDS	Originator By Debbie Adler - dladler Org Name MET Placed Sep 19, 2016	Checked By A. Rangel Org Name Bechtel Placed Sep 19, 2016	RBDavis	TErwin

CORROSION EVALUATION

REVISION HISTORY

4	3/14/06	Modify operating description	DLAdler	HMKrafft	NA	SWVail
3	5/25/05	Update wear allowance based on 24590-WTP-RPT-M-04-0008	DLAdler	JRDivine	NA	APRangus
2	6/30/04	Incorporate new PCDS Add Section p – Inadvertent Addition of Nitric Acid	DLAdler	JRDivine	NA	APRangus
1	11/18/03	Update design temp/pressure Specify mat'l for top head Append updated MSDS Editorial Changes Re-format references Add DWP note	DLAdler	JRDivine	NA	APRangus
0	4/22/02	Initial Issue	JRDivine	DLAdler	SS	BPosta
REV	**DATE**	**REASON FOR REVISION**	**PREPARER**	**CHECKER**	**MET**	**APPROVER**

Please note that source, special nuclear and byproduct materials, as defined in the Atomic Energy Act of 1954 (AEA), are regulated at the U.S Department of Energy (DOE) facilities exclusively by DOE acting pursuant to its AEA authority DOE asserts, that pursuant to the AEA, it has sole and exclusive responsibility and authority to regulate source, special nuclear, and byproduct materials at DOE-owned nuclear facilities Information contained herein on radionuclides is provided for process description purposes only

This bound document contains a total of 17 sheets

CORROSION EVALUATION

Corrosion/Erosion Detailed Discussion

RLD-VSL-00003 is normally empty but can receive plant washes consisting of sump contents from the Process and Effluent Cells, sump contents from the C3/C5 Drains Collection Cell, vessel washes or off-specification material from LCP-VSL-00001/-00002, LFP-VSL-00001/-00002/-00003/-00004, drains from the LVP-TK-00001 berm, suspect radioactive material from the RLD-VSL-00004, and, in off-normal situations, from the RLD-VSL-00005 Overflows from the SBS Condensate Collection Vessel are routed to the RLD-VSL-0003 The contents of RLD-VSL-00003 in the LAW facility are transferred to the PWD-VSL-00044 in the Pretreatment (PT) Facility as required to empty the vessel, but transfers can be routed to TLP-VSL-00009A/B in the PT Facility and, in an off-normal scenario when the other vessels are unavailable, to the RLD-VSL-00005

Under the Direct-Feed Low Activity Waste (DFLAW) configuration, effluent will be transferred from RLD-VSL-00003 to the DEP system evaporator feed vessel, DEP-VSL-00002 During DFLAW operation, the PT Facility transfer routes will be blanked

1 General/Uniform Corrosion Analysis

a Background

General or uniform corrosion is corrosion that is distributed uniformly over the surface of a material without appreciable localization This leads to relatively uniform thinning on sheet and plate materials and general thinning on one side or the other (or both) for pipe and tubing It is recognized by a roughening of the surface and by the presence of corrosion products. The mechanism of the attack is an electrochemical process that takes place at the surface of the material Differences in composition or orientation between small areas on the metal surface create anodes and cathodes that facilitate the corrosion process

b Component-Specific Discussion

The vessel is exposed to liquid from a variety of vessel washes, sumps, drains that are expected to be alkaline and at near-ambient temperature However, as RLD-VSL-00003 is designed to act as a back-up to RLD-VSL-00005 if necessary, the conditions of RLD-VSL-00005 must also be considered, temperature up to 166 °F and pH below 1 The liquids are mixed and there is capability of pH adjustment Under the RLD-VSL-00003 conditions, the uniform corrosion rate for both Type 316L and AL6XN® is low

The reported operating conditions suggest that Type 316L is sufficiently resistant to uniform corrosion However, a 6% Mo alloy is also acceptable and is selected for the vessel bottom shell and head based on use as back-up to RLD-VSL-00005.

2 Pitting Corrosion Analysis

Pitting is localized corrosion of a metal surface that is confined to a point or small area and takes the form of cavities Chloride is known to initiate pitting of stainless steel and related alloys in acid and neutral solutions. In this vessel, the normal alkaline pH conditions and temperatures are such that Type 316L stainless steel would be acceptable. Based on 24590-WTP-RPT-PR-04-0001-04, *WTP Process Corrosion Data – Volume 4*, the vessel is to normally operate at 86 °F (166 °F max) at a pH higher than 12, although the unscheduled transfer from RLD-VSL-00004 could be as low as pH 1

The vessel is operated such that conditions do not promote localized corrosion The solution in the vessel is not left stagnant Liquids are pumped from the vessel intermittently A new caustic heel is established shortly after the vessel is emptied The WTP corrosion studies do not indicate a tendency for pitting corrosion in alkaline waste

The chemistry and operating conditions in this vessel fall within the limits established for both Type 316L and 6% Mo alloy (AL-6XN®) in Tables 1-2 and 1-3 of *WTP Materials Localized Corrosion Design Limits* report, 24590-WTP-RPT-M-11-002 For convenience, this comparison is documented on page 6 of this corrosion evaluation

3 Crevice Corrosion Analysis

Crevice corrosion is a form of localized corrosion of a metal or alloy surface at, or immediately adjacent to, an area that is shielded from full exposure to the environment because of close proximity of the metal or alloy to the surface of another material or an adjacent surface of the same metal or alloy Crevice corrosion is similar to pitting in mechanism Crevices in this vessel are limited by the design and fabrication practice All welding uses butt welds, and crevices are limited to wash ring hangers and other internals With the stated normal operating conditions, Type 316L is the minimum acceptable, a 6% Mo alloy would be the minimum considering use as back-up for RLD-VSL-00005

The chemistry and operating conditions in this vessel fall within the limits established for both Type 316L and 6% Mo alloy (AL-6XN®) in Tables 1-2 and 1-3 of 24590-WTP-RPT-M-11-002

4 Stress Corrosion Cracking Analysis

Stress corrosion cracking (SCC) is the cracking of a material produced by the combined action of corrosion and sustained tensile stress (residual or applied) The exact amount of chloride required to cause stress corrosion cracking is unknown This is because the amount varies with temperature, metal sensitization, and the environment and also because chloride tends to concentrate under heat transfer conditions, by evaporation, and electrochemically during a corrosion process

The chemistry and operating conditions in this vessel fall within the limits established for both Type 316L and 6% Mo alloy (AL-6XN®) in Tables 1-2 and 1-3 of 24590-WTP-RPT-M-11-002 More corrosion-resistant alloys such as Hastelloy® C-22® and Hastelloy® C-276 (UNS N06022 and N10276), are also suitable for internal piping or nozzles and are required for any high-temperature internal lines

CORROSION EVALUATION

5 End Grain Corrosion Analysis

End grain corrosion is preferential corrosion which occurs along the worked direction of wrought stainless steels exposed to highly oxidizing acid conditions End grain corrosion is exclusive to metallic product forms with exposed end grains from shearing or mechanical cutting and only occurs when exposed end grains are exposed to highly oxidizing acid conditions Such conditions are not present in this vessel, therefore, end grain corrosion is not a concern

6 Weld Corrosion Analysis

The welds used in the fabrication will follow the WTP specifications and standards for quality workmanship The materials selected for this fabrication are compatible with the weld filler metals and ASME/AWS practice Using the welding practices specified for the project, there should not be gross micro-segregation, precipitation of secondary phases, formation of unmixed zones, or volatilization of the alloying elements that could lead to localized corrosion of the weld Controls on the cover gas, heat input, and interpass temperature limit the heat tint Welding procedure review will confirm appropriate weld filler metal is specified Corrosion at welds is not considered a problem in the proposed environment No additional allowance is made for weld bead corrosion

7 Microbiologically Influenced Corrosion Analysis

Microbiologically influenced corrosion (MIC) refers to corrosion affected by the presence or activity, or both, of microorganisms Typically, with the exception of cooling water systems, MIC is not observed in operating systems The proposed operating conditions are suitable for microbial growth, but the system is downstream of the main entry points of microbes so the possibility of MIC is small Rinsing with untreated process water may be a concern, rinsing with demineralized water is recommended Conditions that lead to MIC are not present in this system

8 Fatigue/Corrosion Fatigue Analysis

Fatigue is the process of progressive localized permanent structural change occurring in a material subjected to fluctuating stresses less than the ultimate tensile strength of the material Corrosion fatigue is the process wherein a metal fractures prematurely under conditions of simultaneous corrosion and repeated cyclic loading at lower stress levels or fewer cycles than would be required to cause fatigue of that metal in the absence of the corrosive environment

Corrosion fatigue is a function of the cyclic loading and corrosive conditions The vessel design is such that fatigue loads adhere to design code limitations Based on 24590-WTP-MVC-50-00009, *LAW, BOF, and LAB Vessel Cyclic Datasheet Inputs*, vessel temperatures experience no significant changes, therefore, there is no significant thermal cycling It can be stated that conditions with leads to fatigue or corrosion fatigue are not present in this vessel.

9 Vapor Phase Corrosion Analysis

Conditions in the vapor phase and at the vapor/liquid interface can be significantly different than those present in the liquid phase The corrosion evaluation of the vapor phase portion of the vessel considers the surface will be covered with a water vapor condensate and possibly droplets of splashed waste and rinse solution The vessel is fitted with wash rings that will be used periodically to wash down the sides The vapor space corrosion rates are less than the immersed surfaces and the transport away from the surface will be less because of the no-flow conditions As compared to the corrosion in the immersion section, the corrosion rates in the vapor space are much lower Vapor phase corrosion is not a concern

10 Erosion Analysis

Erosion is the progressive loss of material from a solid surface resulting from mechanical interaction between that surface and a fluid, a multi-component fluid, or solid particles carried with the fluid Velocities within the vessel are expected to be low While the PCDS shows no solids, based on 24590-WTP-DB-PET-09-001, *Process Inputs Basis of Design (PIBOD)*, the solids could be as high as 3 wt% -Erosion allowance of 0 016 inch for Type 304L and 316L stainless steel components with solids content below 25 wt% at low velocities (up to 12 ft/s) is based on 24590-WTP-M0C-50-00004, *Wear Allowance for WTP Waste Slurry Systems* Since the AL-6XN® is normally harder and stronger than the austenitic stainless steels, the erosive wear allowance used for the austenitic stainless steel is conservative when used for AL-6XN®

Conditions that lead to localized erosion are not present in this vessel so no localized erosion allowance is necessary

11 Galling of Moving Surfaces Analysis

Where two metals are moving in contact with each other without lubrication, there is a risk of damage to their surfaces No moving unlubricated surfaces are present within the vessel, therefore, galling is not a concern.

12 Fretting/Wear Analysis

Fretting corrosion refers to corrosion damage caused by a slight oscillatory slip between two surfaces Similar to galling but at a much smaller movement, the corrosion products and metal debris break off and act as an abrasive between the surfaces, producing a classic three-body wear problem This damage is induced under load and repeated relative surface motion. Conditions which lead to fretting are not present in this vessel, therefore, fretting is not a concern

CORROSION EVALUATION

13 Galvanic Corrosion Analysis

Galvanic corrosion is accelerated corrosion caused by the potential difference between the two dissimilar metals in an electrolyte One material becomes the anode and the other the cathode. Corrosion occurs on the anode material at the interface where the potential gradient is the greatest A potential difference of more than 200 mV is needed for a sufficient driving force to initiate galvanic corrosion The potential difference for any combination of alloys used in the vessel design is not sufficient for galvanic currents to overcome the passive protective film For such alloys, there is negligible potential difference, so galvanic corrosion is not a concern

14 Cavitation Analysis

Cavitation is the formation and rapid collapse of cavities or bubbles of vapor or gas within a liquid resulting from mechanical or hydrodynamic forces. Cavitation is typically associated with pumps and orifice plates, not vessels The agitator blade is susceptible to cavitation For this reason, agitators are replaceable components To avoid excessive maintenance, a ULTIMET® alloy has been selected for the agitator blades The cobalt-based alloy offers resistance to cavitation damage This alloy also possesses high tensile strength comparable to many duplex stainless steels combined with excellent impact toughness and ductility.

15 Creep Analysis

Creep is time-dependent strain occurring under stress and is described as plastic flow, yielding at stresses less than the yield strength Creep is only experienced during operations at high temperatures. Temperatures much greater than one half the absolute melting temperature of the alloy are necessary for thermally-activated creep to become a concern The vessel operating and design temperatures are too low to lead to creep, therefore, creep is not a concern

16 Inadvertent Nitric Acid Addition

At this time, the design does not provide for the presence of nitric acid reagent in this system Additionally, the vessel is designed to allow for receipt of RLD-VSL-00005 contents which could be at pH as low as 1

17 Conclusion and Justification

The conclusion of this evaluation is that RLD-VSL-00003 can be fabricated from either Type 316L stainless steel or a 6% Mo alloy and is capable of providing 40 years of service Either Type 316L stainless steel or a 6% Mo alloy is expected to be resistant to uniform and localized corrosion under the expected operating conditions. Based on 24590-WTP-M0C-50-00004, the probable loss due to uniform corrosion over 40 years is 0.024 inch; loss due to uniform erosion over 40 years is 0 016 inch A design corrosion allowance of 0 04 inch is recommended and provides sufficient protection against corrosion and erosion of the vessel Higher nickel alloys (such as Hastelloy® C 22® or C-276) would also be satisfactory due to their generally higher resistance to uniform and localized corrosion. Both alloys C-22 and C-276 are suitable for internal piping

Based on comparison of the process conditions documented in 24590-WTP-RPT-PR-04-0001-04, against the limits for Type 316L and AL-6XN® (6% Mo alloy) documented in 24590-WTP-RPT-M-11-002, *WTP Materials Localized Corrosion Design Limits*, the PCDS values, which take into account conditions at contract maximum values, fall within the applicable limits

No localized erosion of the vessel is expected, so no additional localized protection is required

18 Margin

The uniform corrosion allowance for the vessel is 0 04 inch based on the range of inputs, system knowledge, handbooks, literature, and engineering judgment/experience The service conditions described above result in a predicted loss due to uniform corrosion and erosion of 0.040 inches The specified minimum corrosion allowance equals the minimum required corrosion allowance specified in the input calculations, margin is provided in the calculation. The uniform corrosion design margin for the operating conditions is sufficient to expect a 40 year operating life and is justified in the referenced calculations

The localized corrosion margin is based on comparison of the process conditions documented in 24590-WTP-RPT-PR-04-0001-04 against the limits for Type 316L and AL-6XN® documented in 24590-WTP-RPT-M-11-002 The PCDS values, which take into account conditions at contract maximum values, are within the applicable limits

The erosion allowance of 0 016 inch is based on 24590-WTP-M0C-50-00004, *Wear Allowance for WTP Waste Slurry Systems* The recommended uniform erosion allowance provides sufficient protection for erosion of the vessel walls. The margin in the erosive wear allowance is contained in the referenced calculation (24590-WTP-M0C-50-00004).

The maximum operating parameters for this vessel are defined in the PCDS. As shown in the table on the following page, the PCDS calculated pH, chemistry, and temperature are bounded by the materials localized corrosion design limits documented in the WTP Materials Localized Corrosion Design Limits report The difference between the design limits and the operating maximums (PCDS value) is the localized corrosion design margin and, based on the operating conditions, is sufficient to expect a 40 year operating life. The Plant Wash Vessel, RLD-VSL-00003, is protected from localized corrosion (pitting, crevice, and stress corrosion) by operating within the acceptable range of the design limits Operational and process restriction will be used to ensure the limits are maintained

CORROSION EVALUATION

MATERIALS LOCALIZED CORROSION DESIGN LIMITS – Type 316L						
		Temperature (°F)	**pH**	**Chloride (molar)**	**Hydroxide (molar)**	**Cl^-/OH^- (molar)**
DESIGN LIMIT		**150 to 200**	**≥ 10**			**1 max**
RLD-VSL-00003						
Discharge effluent to PWD-VSL-00044 (RLD27)	Discharge effluent to DEP-VSL-00002[1] (RLD27)	166	12 9	2 1E-02	8.1E-02	0 256
Inlet Vessels to RLD-VSL-00003		**Temperature (°F)**	**pH**	**Chloride (molar)**	**Nitrate (molar)**	**Cl^-/NO_3^- (molar)**
Design Limit		**≤ 150**	**≤ 5**			**1.5 max**
Suspect radioactive material from RLD-VSL-00004 (RLD35)		157*	0 32	2 9E-01	0.0	Does not resolve
Inlet Vessels to RLD-VSL-00003		**Temperature (°F)**	**pH**	**Chloride (ppm)**		
Design Limit		**150 max**	**5 to 10**	**300 max**		
C3/C5 Effluent from LVP-TK-00001 Containment Drain (represented by LVP17)		122	9 5	51		
Inlet Vessels to RLD-VSL-00003						
Vessel Washes or Off-Specification Material (RLD25)		Adjusted values not available				
C3/C5 Effluent from Process/Effluent Cell Sumps		This stream is not modeled in APPS and would be bounded by any other feed stream received or transferred on a normal basis				
Suspect Radioactive Liquid from NLD-VSL-00005		This stream is not modeled in APPS and would be bounded by any other feed stream received or transferred on a normal basis				
Vessel overflows from RLD-VSL-00005 (off-normal)		This stream is not modeled in APPS and would be bounded by any other feed stream received or transferred on a normal basis				

Notes for this table

[1] DFLAW configuration based on 24590-BOF-RPT-PR-15-001, *Direct Feed LAW Process Corrosion Data* Under DFLAW configuration, the PT Facility transfer routes are blanked

Inlet vessels to RLD-VSL-00003 based on 24590-WTP-RPT-PR-04-0001-04, Section 6 8, and Figure 12, which identifies normal and off-normal streams Where information is available, off normal streams are also identified in the table above.

References sources for this table

- Design limits - 24590-WTP-RPT-M-11-002, Tables 1-2 & 1-3
- RLD-VSL-00003 (RLD27) – 24590-WTP-RPT-PR-04-0001-04, Figure C-46
- RLD-VSL-00004 (RLD35) – 24590-WTP-RPT-PR-04-0001-02, Figure C-1
- LVP-TK-00001 - 24590-WTP-RPT-PR-04-0001-04, Sections 6 8 3 1 4 and 6 6 3 2 1 and Figure C-36
- C3/C5 Effluent from Process/Effluent Cell Sumps - 24590-WTP-RPT-PR-04-0001-04, Section 6 8 3 1 3
- Suspect Radioactive Liquid from NLD-VSL-00005 - 24590-WTP-RPT-PR-04-0001-04, Section 6 8 3 1 5
- RLD-VSL-00005 overflow – 24590-WTP-RPT-PR-04-0001-04, Section 6 8 3 1 6

CORROSION EVALUATION

MATERIALS LOCALIZED CORROSION DESIGN LIMITS – AL-6XN®				
Design Limit		**Temperature (°F)**	**pH**	**Chloride (ppm)**
		212 max	**≥10**	**25,000**
RLD-VSL-00003				
Discharge effluent to PWD-VSL-00044 (RLD27)	Discharge effluent to DEP-VSL-00002[2] (RLD27)	166	12 9	731
[redacted]				
Design Limit		**Temperature (°F)**	**pH**	**Chloride (ppm)**
Inlet Vessels to RLD-VSL-00003		**150 max**	**1 to 5**	**25,000**
Suspect radioactive material from RLD-VSL-00004 (RLD35)		157[1]	0 32[3]	10,375
[redacted]				
Design Limit		**Temperature (°F)**	**pH**	**Chloride (ppm)**
Inlet Vessels to RLD-VSL-00003		**150 max**	**5 to 10**	**25,000**
C3/C5 Effluent from LVP-TK-00001 Containment Drain (represented by LVP17)		122	9.5	51

Notes for this table

[1] PCDS temperature for the RLD-VSL-00004 is from 24590-LAW-MVC-RLD-00009, *Process Data Input for LAW C3/C5 Drains/Sump Collection Vessel (RLD-VSL-00004) and Transfer Pumps (RLD-PMP-00002A/B)* Bounding temperature of 157 °F is based on condensate received from the LOP-WESP-00001&2 at 121 °F including a margin of 36 °F (20 °C) The nominal temperature of RLD-VSL-00004 of 121 °F is within the limits for 6% Mo alloys.

[2] DFLAW configuration based on 24590-BOF-RPT-PR-15-001, *Direct Feed LAW Process Corrosion Data.*

[3] 24590-LAW-M6N-SHR-00019 has been processed to add sodium hydroxide (NaOH) to RLD-VSL-00004 to make the solution compliant to the WTP Materials Localized Corrosion Design Limits Chemical adjustment in RLD-VSL-00004 will produce a condensate flow stream that is compliant with the design limits for both Type 316L and AL6XN used in the subsequent vessels, which includes RLD-VSL-00003

Inlet vessels to RLD-VSL-00003 based on 24590-WTP-RPT-PR-04-0001-04, Section 6 8, and Figure 12, which identifies normal and off-normal streams Where information is available, off normal streams are also identified in the table above

References sources for this table

- Design limits - 24590-WTP-RPT-M-11-002, Tables 1-2 & 1-3
- RLD-VSL-00003 (RLD27) – 24590-WTP-RPT-PR-04-0001-04, Figure C-46
- RLD-VSL-00004 (RLD35) – 24590-WTP-RPT-PR-04-0001-02, Figure C-1
- LVP-TK-00001 - 24590-WTP-RPT-PR-04-0001-04, Sections 6 8 3 1 4 and 6 6 3 2 1 and Figure C-36

CORROSION EVALUATION

19 References

1 24590-BOF-RPT-PR-15-001, *Direct Feed LAW Process Corrosion Data*
2 24590-LAW-3ZD-RLD-00001, *System Design Description - LAW Facility Radioactive Liquid Waste Disposal (RLD) System Design Description*
3 24590-LAW-M6N-SHR-00019, *Caustic Addition to RLD-VSL-00004*
4 24590-LAW-MVC-RLD-00008, *Process Data Input for LAW Plant Wash Vessel (RLD-VSL-00003) and Discharge Pumps (RLD-PMP-00001A/B)*
5 24590-LAW-P1-P01T-00002, *LAW Vitrification Building General Arrangement Plan at El 3 Feet-0 Inches*
6 24590-WTP-MVC-50-00009, *LAW, BOF, and LAB Vessel Cyclic Datasheet Inputs*
7 24590-LAW-MVC-RLD-00009, *Process Data Input for LAW C3/C5 Drains/Sump Collection Vessel (RLD-VSL-00004) and Transfer Pumps (RLD-PMP-00002A/B)*
8 24590-WTP-DB-PET-09-001, *Process Inputs Basis of Design (PIBOD)*
9 24590-WTP-RPT-M-04-0008, *Evaluation of Stainless Steel Wear Rates in WTP Waste Streams at Low Velocities*
10 24590-WTP-RPT-M-11-002, *WTP Vessel Localized Corrosion Limit Analysis Report*
11 24590-WTP-RPT-PR-04-0001-02, *WTP Process Corrosion Data – Volume 2*
12. 24590-WTP-RPT-PR-04-0001-04, *WTP Process Corrosion Data – Volume 4*
13 CCN 130173, Dillon, CP (Nickel Development Institute), Personal Communication to J R Divine (ChemMet, Ltd , PC), 3 Feb 2000
14 Berhardsson, S, R Mellstrom, and J Oredsson, 1981, *Properties of Two Highly Corrosion Resistant Duplex Stainless Steels*, Paper 124, presented at Corrosion 81, NACE International, Houston, TX 77218
15. Davis, JR (Ed), 1987, *Corrosion, Vol 13*, In "Metals Handbook", ASM International, Metals Park, OH 44073
16 Sedriks, AJ, 1996, *Corrosion of Stainless Steels*, John Wiley & Sons, Inc , New York, NY 10158

Additional Reading

- 24590-LAW-M6-RLD-00001001, P&ID - LAW Radioactive Liquid Waste Disposal System Plant Wash Vessel RLD-VSL-00003
- 24590-LAW-MVD-RLD-00007, *Mechanical Data Sheet for 24590-LAW-MV-RLD-VSL-00003 - Plant Wash Vessel*
- Agarwal, DC, *Nickel and Nickel Alloys*, In Revie, WW, 2000 *Uhlig's Corrosion Handbook*, 2nd Edition, Wiley-Interscience, New York, NY 10158
- Davis, JR (Ed), 1994, *Stainless Steels*, In ASM Metals Handbook, ASM International, Metals Park, OH 44073
- Hamner, NE, 1981, *Corrosion Data Survey*, Metals Section, 5th Ed, NACE International, Houston, TX 77218
- Jones, RH (Ed.), 1992, *Stress-Corrosion Cracking*, ASM International, Metals Park, OH 44073
- Koch, GH, 1995, *Localized Corrosion in Halides Other Than Chlorides*, MTI Pub No 41, Materials Technology Institute of the Chemical Process Industries, Inc, St Louis, MO 63141
- Phull, BS, WL Mathay, & RW Ross, 2000, *Corrosion Resistance of Duplex and 4-6% Mo-Containing Stainless Steels in FGD Scrubber Absorber Slurry Environments*, Presented at Corrosion 2000, Orlando, FL, March 26-31, 2000, NACE International, Houston TX 77218.
- Uhlig, HH, 1948, *Corrosion Handbook*, John Wiley & Sons, New York, NY 10158
- Van Delinder, LS (Ed), 1984, Corrosion Basics, NACE International, Houston, TX 77084
- Wilding, MW and BE Paige, 1976, *Survey on Corrosion of Metals and Alloys in Solutions Containing Nitric Acid*, ICP-1107, Idaho National Engineering Laboratory, Idaho Falls, ID

CORROSION EVALUATION

PROCESS CORROSION DATA SHEET (extract)

Component(s) (Name/ID #) Plant Wash Vessel (RLD-VSL-00003)

Facility LAW

In Black Cell? No

Chemicals	Unit	Stream ID RLD27 AQUEOUS
Cations (ppm)		
Al^{+3} (Aluminum)	ppm	3564
Fe^{+3} (Iron)	ppm	4233
Hg^{+2} (Mercury)	ppm	0
Pb^{+2} (Lead)	ppm	20
Anions (ppm)		
Cl^- (Chloride)	ppm	738
CO_3^{-2} (Carbonate)	ppm	10,299
F^- (Fluoride)	ppm	1030
NO_2^- (Nitrate)	ppm	986
NO_3^- (Nitrite)	ppm	4419
PO_4^{-3} (Phosphate)	ppm	2680
SO_4^{-2} (Sulfate)	ppm	957
$OH(aq)^-$	ppm	1363
$OH(s)^-$	ppm	804
pH		12.91
Suspended Solids	wt%	0
Temperature	°F	166.00
Liquid Density	lb/ft3	62.4

Figure C- 46 RLD-VSL-00003 Aqueous PCDS
Vessel : RLD-VSL-3

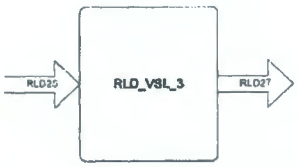

	Stream ID	
	RLD25	RLD27
Properties		
Suspended Solids [wt %]	0	0
Total Salts [wt %]	2.76	8.43
Sodium Molarity [M]	1.83E-01	2.00E-01
Relative Humidity [%]	n/a	n/a
pH	12.48	12.93
Anti-Foam Agent [ppm]	1.89E-00	1.58E+00
TOC [kg/h]	1.48E-01	1.06E+00
Pressure [bar]	0.99	0.98
Temperature [C]	25.00	74.44
Temperature [F]	77.00	166.00
Water Flow Rate [kg/hr]	261.71	261.70
Total Aqueous Flow Rate [kg/hr]	289.14	285.80
Total Flow Rate [kg/hr]	3.69E+02	2.86E+02
Stream Note	VIT LIQUID LAW Plant Wash and C3/C5 Sumps Effluent	VIT LIQUID LAW Plant Wash Vessel Effluent
AQUEOUS		
Cations (ppm)		
Ag+	0	0
Al+3	1124	3564
Am+3	0	0
As+3	0	0
B+3	1071	3401
Ba+2	0	0
Be+2	0	0
Bi+3	0	1
Ca+2	1168	3429
Cd+2	0	0
Ce+4	14	28
Co+2	0	0
Cr+3	0	0
Cr+6	12	37
Cs+	0	0
Cu+2	0	0
Eu+3	0	0
Fe+2	0	0
Fe+3	1323	4233
H+	0	0
Hg+2	0	0
K+	79	96
La+3	0	0
Li+	282	2199
Mg+2	311	1947
Mn+4	4	32
Mo+6	0	0
Na+	4147	4532
Nd+3	0	0
Ni+2	4	20
Pb+2	1	20
Pd+2	0	0
Pr+4	0	0
Pu+4	0	0
Ra+2	0	0
Rb+	0	0
Rh+3	0	0
Ru+4	0	0
Sb+3	0	0
Se+4	0	0
Si+4	6565	23323
Sn+2	1	2
Ta+5	0	0
Te+4	0	0
Th+4	0	0
Ti+4	1	2
Tl+3	293	943
U+4	0	0
V+3	0	0
W+6	1	4
Y+3	0	0
Zn+2	0	0
Zr+4	978	3107
	698	2216
Anions (ppm)		
BrO3+4-	0	0
C2O4-2	51	123
Cl-	674	738
CN-	0	0
CO3-2	1818	10299
F-	940	1030
H2PO4-	0	0
H2SeO4-2	0	0
H3SiO4-	0	0
HCO3-	0	0
HPO4-2	0	0
HSO3-	0	0
HSO4-	0	0
I-	0	0
IO3-	0	0
NH4+	0	0
NO2-	758	986
NO3-	2812	4419
O-2	0	0
O2-2	0	0
OH(aq)-	506	1363
OH(s)-	331	804
PO4-3	170	2680
SO3-2	0	0
SO4-2	275	857
Organics (ppm)		
AFA_DCMP	75	105
AFA_NVOC	2	2
NVOC	88	1816
Sucrose	1130	1731
SVOC	2	48
VOC	1	25

GENERAL NOTE FOR USE OF PCDS:

- *The information provided by the PCDS report is intended solely for use in support of the vessel material selection process and Corrosion Evaluations. The inputs, assumptions, and computational engineering models used in generating the results presented herein are specific to this effort. Use of the information presented herein for any other purpose will require separate consideration and analysis to support justification of its use for the desired, alternative purpose.*
- *The process descriptions in this report cover routine process operations and non-routine infrequent process operations, when such exist, that could impact corrosion or erosion of process equipment.*
- *The data in the non-shaded columns of the PCDSs has NOT been adjusted to comply with the higher expected, vessel-specific operational conditions.*
- *The process descriptions provided in this report are for general information and reflective of the corrosion engineer's analysis for transparency, the information is current only at the time this document is issued. These process descriptions should not be referenced for design.*

6.8 Plant Wash Vessel (RLD-VSL-00003)

6.8.1 Description of Vessel/Equipment

The Plant Wash Vessel (RLD-VSL-00003) is normally empty, but can receive plant washes consisting of sump contents from the Process and Effluent Cells (RLD-SUMP-00029 to -00032 and RLD-SUMP-00035/-00036), sump contents from the C3/C5 Drains Collection Cell (RLD-SUMP-00028), vessel washes or off-specification material from process vessels (LCP-VSL-00001/-00002, LFP-VSL-00001/-00002/-00003/-00004), drains from the Caustic Collection Vessel (LVP-TK-00001) berm, suspect radioactive material from the C3/C5 Drains/Sump Collection Vessel (RLD-VSL-00004), and in off-normal situations, from the SBS Condensate Collection Vessel (RLD-VSL-00005). Overflows from the SBS Condensate Collection Vessel are routed to the RLD-VSL-0003. The contents of the RLD-VSL-00003 in the LAW facility are transferred to the PWD-VSL-00044 in the PT facility as required to empty the vessel, but transfers can be routed to the LAW SBS Condensate Receipt Vessels (TLP-VSL-00009A/B) in the PT facility and, in an off-normal scenario when the other vessels are unavailable, to the SBS Condensate Collection Vessel (RLD-VSL-00005).

Figure 12 provides a sketch of the input and output arrangement of streams for RLD-VSL-00003. Streams that are not primary routes are represented with dashed lines.

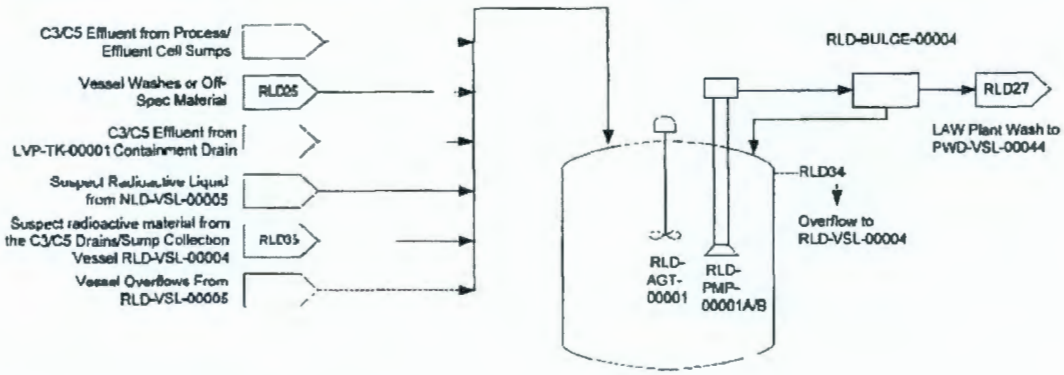

Figure 12 RLD-VSL-00003 Sketch

6.8.2 System Functions

The process functions of this vessel are as follows:

- Receive Liquid Effluents
- Store Liquid Effluents
- Mix Liquid Effluents
- Transfer Collected Effluents

This vessel performs additional system functions beyond the process functions, but these are outside the scope of this document. The non-process functions are not discussed any further in this document. However, they are listed below for completeness:

- Confine Hazardous Materials
- Flush System Components
- Report System Conditions

6.8.3 Description of Process Functions

6.8.3.1 Receive Liquid Effluents

The following process streams taken from Process Flow Diagram 24590-LAW-M5-V17T-00014 (Ref. 7.1.3(19)) and associated DCNs are inputs to RLD-VSL-00003:

- RLD25 - Vessel Washes or Off-Spec Material
- RLD35 - Suspect radioactive material from the C3/C5 Drains/Sump Collection Vessel RLD-VSL-00004
- C3/C5 Effluent from Process/Effluent Cell Sumps
- C3/C5 Effluent from LVP-TK-00001 Containment Drain
- Suspect Radioactive Liquid from NLD-VSL-00005
- Vessel overflows from RLD-VSL-00005

6.8.3.1.1 RLD25 - Vessel Washes or Off-Specification Material

Stream RLD25 is the wash effluent or off-specification material from LCP-VSL-00001, LCP-VSL-00002, LFP-VSL-00001, LFP-VSL-00002, LFP-VSL-00003, and LFP-VSL-00004.

Molarity
The sodium molarity of stream RLD25 normally ranges from 0.1 to 0.2 M.

Temperature
Heat losses in the piping between the LAW vessels, sumps, and RLD-VSL-00003 are assumed to be negligible due to the short piping distance and the high transfer rate. The vessel is normally operating between 76°F and 77°F (24590-WTP-DB-PET-09-001, Appendix B, Table B-25, Ref. 7.1.1(3)). To be highest expected, the maximum operating temperature is the same as that of the LAW SBS Condensate Collection Vessel (RLD-VSL-00005), which is 166°F (24590-LAW-MVC-RLD-00008, Section 6.1.3, Ref. 7.1.4(23)).

Solids Concentration
The normal concentration of suspended solids for process stream RLD25 is 2.3 to 3.0 wt% UDS (24590-WTP-DB-PET-09-001, Appendix B, Table B-25, Ref. 7.1.1(3)).

CORROSION EVALUATION

Liquid Density
The normal operating densities for stream RLD25 are 62.4 to 62.5 lb/ft^3 (24590-WTP-DB-PET-09-001, Appendix B, Table B-25, Ref. 7.1.1(3)).

Liquid pH
Liquid pH of stream RLD25 will normally range from 12.5 to 13.5 (24590-WTP-DB-PET-09-001, Appendix B, Table B-25, Ref. 7.1.1(3)).

6.8.3.1.2 RLD35 - Suspect radioactive material from the C3/C5 Drains/Sump Collection Vessel RLD-VSL-00004

Stream RLD35 is the contents of the C3/C5 Drains/Sump Collection Vessel (RLD-VSL-00004), which is comprised of liquid drains from the Wet Electrostatic Precipitators (LOP-WESP-00001/00002), and drains from vent headers and floor drains from C3/C5 areas. The unscheduled C3/C5 drains collected in the C3/C5 Drains/Sump Collection Vessel (RLD-VSL-00004) can be transferred to the Plant Wash Vessel (RLD-VSL-00003) via RLD-BULGE-00001 as required in order to empty the vessel.

Molarity
Since there is no chemical adjustment of the contents of RLD-VSL-00004 prior to transfer to vessel RLD-VSL-00003/5, the sodium molarity is not a controlled parameter for the process stream RLD35. However, the maximum concentration of sodium is 0.2 molar, as determined by the Process Inputs Basis of Design (24590-WTP-DB-PET-09-001, Appendix B, Table B-26, Ref. 7.1.1(3)).

Temperature
RLD-VSL-00004 collects effluent drains from C3/C5 areas within LAW facility. The minimum temperature for both an internal unoccupied C3 area and internal C5 area is 59°F (24590-WTP-DB-ENG-01-001, Table 12-1, Ref. 7.1.1(2)). However, RLD-VSL-00004 also receives condensate from the WESPs at a nominal temperature of 121°F (24590-LAW-MVC-RLD-00009, Section 7.3, Ref. 7.1.4(24)). The vessel's nominal operating temperature is the same as that of the WESP condensate entering the vessel at 121°F (24590-LAW-MVC-RLD-00009, Section 7.3, Ref. 7.1.4(24)). The maximum temperature of the WESP off-gas discharge is 126°F (24590-LAW-MEC-RLD-00001, Section 2.16, Ref. 7.1.4(18)). The vessel's design temperature is based on adding a margin of 24°F above the maximum WESP offgas temperature (126°F) (24590-LAW-MEC-RLD-00001, Section 7.2.2, Ref. 7.1.4(18)). Therefore, the minimum temperature is 59°F, nominal temperature is 121°F, and the maximum temperature is 150°F.

Solids Concentration
The normal concentration of suspended solids for process stream RLD35 is 0 wt% UDS (24590-WTP-DB-PET-09-001, Appendix B, Table B-26, Ref. 7.1.1(3)). Note that vessel RLD-VSL-00004 normally collects C3/C5 floor drains, WESP drains from LOP-WESP-00001/2, and effluent from the vessel vent header drain, which are expected to have negligible suspended solids.

Liquid Density
The minimum and nominal densities of stream RLD35 are 61.0 lb/ft^3 and 61.7 lb/ft^3, respectively (24590-LAW-MVC-RLD-00009, Section 7.5.2, Ref. 7.1.4(24)). The maximum density of stream RLD35 is 62.5 lb/ft^3 (24590-WTP-DB-PET-09-001, Appendix B, Table B-26, Ref. 7.1.1(3)).

Liquid pH
Liquid pH of stream RLD35 will normally range from 1.0-11.0 (24590-WTP-DB-PET-09-001, Appendix B, Table B-26, Ref. 7.1.1(3)).

6.8.3.1.3 C3/C5 Effluent from Process/Effluent Cell Sumps

Based on RLD-VSL-00003 P&ID (24590-LAW-M6-RLD-00001001, Ref. 7.1.3(51)) the C3/C5 Effluent from Process/Effluent Cell Sumps are shown as receipt of waste from either of the following

1) the RLD-BULGE-00001 as C3/C5 Effluent from the C3/C5 Drains/Sump Collection Vessel RLD-VSL-00004 (Stream RLD35 properties)

2) Sump Pumps RLD-PMP-00031, -00032 (RLD-SUMP-00035 & RLD-SUMP-00036 respectively) as process fluid that is received from RLD-BULGE-00004 drain which is RLD-VSL-00003 contents

3) Sump Effluent from RLD-PMP-00004 (RLD-SUMP-00028) which is primarily RLD-VSL-00004 contents (Stream RLD35 properties).

Note: This stream is not modeled in APPS and would be bounded by any other feed stream RLD-VSL-00003 receives or transfers on a normal basis. Therefore, the stream is not discussed any further in this document.

6.8.3.1.4 C3/C5 Effluent from LVP-TK-00001 Containment Drain

Drains from the LVP Scrubber Caustic Collection Vessel (LVP-TK-00001) berm are transferred as required to the Plant Wash Vessel (RLD-VSL-00003). The scrubbing solution is continuously recirculated through the LVP Caustic Scrubber, LVP-SCB-00001. The C3/C5 effluent in the containment drain will have the same properties as the LVP-TK-00001 vessel contents, stream LVP21, as given in Section 6.6.3.2.1.

6.8.3.1.5 Suspect Radioactive Liquid from NLD-VSL-00005

NLD-VSL-00005 collects C1/C2 drains/sumps NDNR for interim storage before transferring the effluents to BOF. Normally the NLD system transfers clean effluent to the BOF. However, if the effluent is not characterized as clean, the suspect radioactive material from the NLD-VSL-00005 is transferred to RLD-VSL-00003. This is an infrequent operation. This stream is not modeled in APPS and would be bounded by any other feed stream RLD-VSL-00003 receives or transfers on a normal basis. Therefore, the stream is not discussed any further in this document.

6.8.3.1.6 Vessel overflows from RLD-VSL-00005

RLD-VSL-00005 overflows to RLD-VSL-00003 during an off-normal condition. This stream is not modeled in APPS and would be bounded by any other feed stream RLD-VSL-00003 receives or transfers on a normal basis. Therefore, the stream is not discussed any further in this document.

6.8.3.2 Store Liquid Effluents

The Plant Wash Vessel (RLD-VSL-00003) is normally empty, but can receive plant washes and drains. RLD-VSL-00003 serves as a spare for the SBS condensate collection vessel (RLD-VSL-00005), when required.

6.8.3.3 Mix Liquid Effluents

Mixing within RLD-VSL-00003 is accomplished by operating mechanical agitator RLD-AGT-00001. The agitator RLD-AGT-00001 is provided to properly mix the contents and to suspend solids accumulated in the vessel for transfer or sampling operations in RLD-VSL-00003.

6.8.3.4 Transfer Collected Effluents

The following process streams taken from Process Flow Diagram 24590-LAW-M5-V17T-00014 (Ref. 7.1.3(19)) and associated DCNs are outputs from RLD-VSL-00003:

- RLD27 - Discharge effluent to PWD-VSL-00044
- Overflow to cell sump RLD-VSL-00004

6.8.3.4.1 RLD27 - Discharge effluent to PWD-VSL-00044

Stream RLD27 is the collected effluent from the LAW vessel washes, drains, and sumps collected in the Plant Wash vessel (RLD-VSL-00003). RLD27 is normally discharged to the Pretreatment Plant Wash Vessel (PWD-VSL-00044).

The Plant Wash Vessel (RLD-VSL-00003) and SBS Condensate Collection Vessel (RLD-VSL-00005) contents are routed in dedicated transfer lines from the pump discharge header in the Plant Wash SBS Condensate Collection Valve Bulge (RLD-BULGE-00004) to the Pretreatment Plant Wash Vessel (PWD-VSL-00044) and the Pretreatment LAW SBS Condensate Receipt Vessels (TLP-VSL-00009A/B) respectively. Cross-connections between these transfer lines within the Plant Wash SBS Condensate Collection Valve Bulge and the Pretreatment facility exist in order to enable one of the transfer lines to be used as a back-up for the other. Between facilities, the transfer lines are buried and sloped to the Pretreatment facility, and are designed to be free draining without any traps. Demineralized water is supplied to the transfer lines for flushing.

Molarity
The normal plant wash feed from RLD-VSL-00003 has a sodium molarity that ranges from 0.1 molar to 0.2 molar during normal operations (24590-WTP-DB-PET-09-001, Page B-25, Ref. 7.1.1(3)). pH adjustment can be accomplished within the vessel via addition of sodium hydroxide from a wash cart via the wash nozzles. However, pH adjustment will typically be accomplished within the receiving vessel, PWD-VSL-00044. Therefore, the sodium molarity is not a controlled parameter for the process stream RLD27.

Temperature
PWD-VSL-00044 will receive washes and sumps from various LAW sources. It can also be used as a spare for RLD-VSL-00005. The upper operating temperature will be assumed to be the same as that of RLD-VSL-00005, which is 166°F (24590-LAW-MVC-RLD-00007, Section 8, Sheet No. 14, Ref. 7.1.4(22)). RLD-VSL-00003 will normally be empty except for a heel that will keep the pump suction lines submerged. The nominal temperature will be the average temperature of the surrounding cell, 86°F. The minimum temperature will be the minimum temperature of the surrounding C5 cell, 59°F (24590-LAW-MVC-RLD-00008, Section 7.3, Ref. 7.1.4(23)).

Solids Concentration
The normal and the upper solids concentration in stream RLD27 is 2.3 and 3.0 wt% UDS, respectively (24590-WTP-DB-PET-09-001, page B-25, Ref. 7.1.1(3)). .

Liquid Density
The normal density of RLD27 is 62.4 lb/ft^3 which is that of water. The upper slurry density of RLD27 is based on the design specific gravity in RLD-VSL-00003 where stream RLD27 originates, which is 1.38 (24590-LAW-MVD-RLD-00007, Ref. 7.1.5(7)). Therefore, the upper slurry density is also 86.2 lb/ft^3.

Liquid pH
Vessel pH adjustment can be accomplished within the vessel by addition of sodium hydroxide from a wash cart via the wash nozzles. However, pH adjustment will typically be accomplished within the receiving vessel PWD-VSL-00044. Therefore the average resultant pH for stream RLD27 will be provided in the corrosion data sheet.

6.8.3.4.2 Overflow to RLD-VSL-00004

RLD-VSL-00003 overflows through a 6 inch line to the LAW common overflow header, which flows into the C3/C5 Drains Sump Collection Vessel (RLD-VSL-00005). The overflow line has connections for flushing capability to facilitate cleaning, washing, decontaminating or unplugging the line and a check valve to prevent the spread of contamination to the DIW utility system. The overflow line is designed to be free-draining, without traps and seals.

6.8.4 Process Modes

6.8.4.1 Normal Operations

Based on the assessment of streams frequently transferred in and out of RLD-VSL-00003, the following process modes are considered:

- RLD27 - Discharge effluent to PWD-VSL-00044

Stream RLD27 is the collected effluent primarily from LAW vessel washes, drains, and sumps. In addition, the vessel also collects overflows from other plant vessels. The Plant washes, drains, and sumps collected in the Plant Wash Vessel (RLD-VSL-00003) are normally transferred to the PTF Plant Wash Vessel (PWD-VSL-00044).

Section 6.8.5.1 summarizes in tabular form the process mode characterized by stream RLD27.

6.8.4.2 Infrequent Operations

Based on the assessment of streams infrequently transferred in and out of RLD-VSL-00003, the following process mode is considered:

- Decontamination of RLD-VSL-00003 via spray nozzles (RLD-NOZ-00002/3)

Section 6.8.5.2 summarizes in tabular form the infrequent process mode characterized by decontamination of RLD-VSL-00003.

6.8.5 Summary of Processing Conditions for RLD-VSL-00003

6.8.5.1 Normal Operations

The following table summarizes the normal processing mode for RLD-VSL-00003, where the various waste streams collected in RLD-VSL-00003 consist primarily of LAW vessel washes, drains, and sumps. The LAW vessel washes, drains, and sumps collected in RLD-VSL-00003 are normally transferred to the PTF Plant Wash Vessel (PWD-VSL-00044) to empty the vessel RLD-VSL-00003.

	Na Molarity		Temperature (°F)			Weight % UDS	
Stream Number	Norm.	Upper	Low	Norm.	Upper	Norm.	Upper
RLD2[7]	0.1	0.2	59	86	166	2.3	3.0

6.8.5.2 Infrequent Operations

RLD-VSL-00003 is equipped with spray nozzles, RLD-NOZ-00002/3, for remote vessel washing. Demineralized water is normally supplied to the spray nozzles for interior surface washdown for scheduled cleaning purposes, decontamination of the vessel for maintenance purposes, or to dilute the liquid inside the vessel. Sodium hydroxide for pH adjustment can be added from a wash cart via wash nozzles if necessary. However, pH adjustment will typically be accomplished within the receiving vessel, PWD-VSL-00044. The concentration of NaOH is assumed to range from 0.1 to 2 molar and is added to RLD-VSL-00003 to facilitate clean out/decontamination of the vessel.

	NaOH Molarity		Temperature (°F)		Weight % UDS	
Stream Number	Normal	Upper	Normal	Upper	Normal	Upper
Spray Nozzles (RLD-NOZ-00002/3)	0.1	2M	77	95	0	0

Note: Caustic (sodium hydroxide) is delivered at 19M (50wt%) and diluted for a number of duties (24590-WTP-DB-ENG-01-001, Section 6.4, Ref. 7.1.1(2))

AFS-17-0046

March 30, 2017

Ms. Tess Klatt
Subcontract Administrator
Bechtel National, Inc.
2435 Stevens Center Place
Richland, Washington 99354

Dear Ms. Klatt:

BECHTEL NATIONAL, INC. CONTRACT NO. 24590-CM-HC4-HXYG-00240 IQRPE STRUCTURAL INTEGRITY ASSESSMENT REPORT FOR LAW RLD PLANT WASH VESSEL (RLD-VSL-00003) AND SBS CONDENSATE COLLECTION VESSEL (RLD-VSL-00005) (IA-3019128-000)

The integrity assessment of the subject vessels have been completed per the contract requirements and is enclosed for your use. The assessment found that the design is sufficient to ensure that the vessels are adequately designed and have sufficient structural strength, compatibility with the waste(s) to be processed/stored/treated, and corrosion protection to ensure that they will not collapse, rupture, or fail.

If you have any questions, please contact Tarlok Hundal at (509) 371-1975, or via email at tarlok.hundal@areva.com.

Sincerely,

Elizabeth W. Smith, C.P.M.
Contract Administrator
AREVA Federal Services LLC
Richland Office

Enclosure (1)

lap
cc: D. C. Pfluger, MS12-2A w/enclosure (1)

AREVA Federal Services LLC

2101 Horn Rapids Road · Richland, WA 99354
Tel: (509) 371-1893 · Fax: (509) 375-8495 · www.us.areva.com

IQRPE STRUCTURAL INTEGRITY ASSESSMENT REPORT FOR LAW RLD PLANT WASH VESSEL (RLD-VSL-00003) AND SBS CONDENSATE COLLECTION VESSEL (RLD-VSL-00005)

Please note that source, special nuclear and byproduct materials, as defined in the Atomic Energy Act of 1954 (AEA), are regulated at the U.S. Department of Energy (DOE) facilities exclusively by DOE acting pursuant to its AEA authority. DOE asserts, that pursuant to the AEA, it has sole and exclusive responsibility and authority to regulate source, special nuclear, and byproduct materials at DOE-owned nuclear facilities. Information contained herein on radionuclides is provided for process description purposes only.

IQRPE STRUCTURAL INTEGRITY ASSESSMENT REPORT FOR LAW RLD PLANT WASH VESSEL (RLD-VSL-00003) AND SBS CONDENSATE COLLECTION VESSEL (RLD-VSL-00005)

"I, Tarlok Singh Hundal, have reviewed and certified a portion of the design of a new tank system component located at the Hanford Waste Treatment Plant, owned/operated by Department of Energy, Office of River Protection, Richland, Washington. My duties were independent review of the current design for the LAW RLD Plant Wash Vessel (RLD-VSL-00003) and SBS Condensate Collection Vessel (RLD-VSL-00005), as required by the Washington Administrative Code, *Dangerous Waste Regulations*, Section WAC-173-303-640(3) (a) through (g) applicable components."

"I certify under penalty of law that I have personally examined and am familiar with the information submitted in this document and all attachments and that, based on my inquiry of those individuals immediately responsible for obtaining the information, I believe that the information is true, accurate, and complete. I am aware that there are significant penalties for submitting false information, including the possibility of fine and imprisonment."

The documentation reviewed indicates that the design fully satisfies the requirements of the WAC.

The attached review is fifteen (15) pages numbered one (1) through fifteen (15).

TARLOK SINGH HUNDAL
STATE OF WASHINGTON
20213
REGISTERED
PROFESSIONAL ENGINEER

Signature

3/30/2017
Date

Scope	Scope of this Integrity Assessment	This integrity assessment includes two LAW RLD system vessels; the Plant Wash Vessel (RLD-VSL-00003) and the SBS Condensate Collection Vessel (RLD-VSL-00005) including their appurtenances or offspring items. Both of these vessels ar located in Room L-0126 at Floor Elev. 3'-0" of the LAW Vitrification Building as shown on drawing 24590-LAW-P1-P01 00002. This assessment report for the two vessels is depicted as below: • Pages 1-3 are common to Vessels (RLD-VSL-00003) & (RLD-VSL-00005) • Pages 4-9 are for Vessel (RLD-VSL-00003) • Pages 10-15 are for Vessel (RLD-VSL-00005).
Summary of Assessment		For each item of "Information Assessed" (i.e., Criteria) on the following pages, the items listed under "Source of Information" were reviewed and found to furnish adequate design requirements and controls to ensure that the design fully satisfies the requirements of Washington Administrative Code (WAC), Chapter 173-303 WAC, *Dangerous Waste Regulations,* WAC-173-303-640, *Tank Systems.*

References	Material Requisitions, Specifications, Mechanical Data Sheets, System Design Description, and Corrosion Evaluations	Material Requisitions: 24590-CM-MRB-MVA0-00001, Rev. 2, Pressure Vessels, Shop Fabricated, Large (VXNW) (N050). 24590-QL-MRB-MVA0-00001, Rev. 6, Pressure Vessels, High Alloy, Shop Fabricated, Large, QL-1 (N110). Specifications: The following Specifications with their respective revision and Specification Change Notices (SCNs) are listed in the above listed Material Requisitions: 24590-WTP-3PS-MV00-T0001, Engineering Specification for Pressure Vessel Design and Fabrication; 24590-WTP-3PS-MV00-T0002, Engineering Specification for Seismic Qualification Criteria for Pressure Vessels; 24590-WTP-3PS-MV00-T0003, Engineering Specification for Pressure Vessel Fatigue Analysis; 24590-WTP-3PS-MVB2-T0001, Engineering Specification for Welding of Pressure Vessels, Heat Exchangers, and Boilers; 24590-WTP-3PS-M000-T0002, Engineering Specification for Mechanical Handling, Equipment Design, and Manufacture; 24590-WTP-3PS-G000-T0002, Engineering Specification for Positive Material Identification (PMI) for Shop Fabrication; 24590-WTP-3PS-G000-T0003, Engineering Specification for Packaging, Handling, and Storage Requirements; 24590-WTP-3PS-G000-T0014, Engineering Specification for Supplier Design Analysis; 24590-WTP-3PS-FB01-T0001, Engineering Specification for Structural Design Loads for Seismic Category III & IV Equipment and Tanks. Mechanical Data Sheets: 24590-LAW-MVD-RLD-00007, Rev. 1, Plant Wash Vessel (RLD-VSL-00003); 24590-LAW-MVD-RLD-00006, Rev. 3, SBS Condensate Collection Vessel (RLD-VSL-00005). System Design Description: 24590-LAW-3ZD-RLD-00001, Rev. 0, LAW Facility Radioactive Liquid Waste Disposal (RLD) System Design Description, including SDDCN No. 24590-LAW-3ZN-RLD-00001. Corrosion Evaluations: 24590-LAW-N1D-RLD-00005, Rev. 5, Plant Wash Vessel (RLD-VSL-00003); 24590-LAW-N1D-RLD-00002, Rev. 4, SBS Condensate Collection Vessel (RLD-VSL-00005).

References (cont'd)	Drawings	Plant Drawings: 24590-LAW-P1-P01T-00002, Rev. 7, LAW Vitrification Building General Arrangement Plan at El. 3'-0"; 24590-LAW-M6-RLD-00001001, Rev. 0, P & ID-LAW Radioactive Liquid Waste Disposal System Plant Wash Vessel (RLD-VSL-00003); 24590-LAW-M6-RLD-00001002, Rev. 0, P & ID-LAW Radioactive Liquid Waste Disposal System Plant Wash Vessel (RLD-VSL-00003); 24590-LAW-M6-RLD-00001003, Rev. 0, P & ID-LAW Radioactive Liquid Waste Disposal System SBS Condensate Collection (RLD-VSL-00005); 24590-LAW-M6-RLD-00001004, Rev. 0, P & ID-LAW Radioactive Liquid Waste Disposal System SBS Condensate Collection (RLD-VSL-00005); 24590-LAW-M6-RLD-00001005, Rev. 0, P & ID-LAW Radioactive Liquid Waste Disposal System Plant Vessel & SBS Condensate Collection (RLD-BULGE-00004); 24590-LAW-M6-RLD-00001006, Rev. 0, P & ID-LAW Radioactive Liquid Waste Disposal System Plant Vessel & SBS Condensate Collection (RLD-BULGE-00004); 24590-LAW-M5-V17T-00014, Rev. 6, Process Flow Diagram LAW Liquid Effluent (System RLD). Vendor Fabrication Drawings (Bechtel Status Code 1 Drawings*): 24590-CM-POA-MVA0-00007-02-04, Rev. 00F, General Arrangement Dwg for Plant Wash Vessel Assembly (RLD-VSL-00003), 24590-CM-POA-MVA0-00007-02-05, Rev. 00D, Ass'y & Details Dwg for Plant Wash Vessel (RLD-VSL-00003); 24590-QL-POC-MVA0-00001-12-08, Rev. B00, Fabrication Details (RLD-VSL-00005); 24590-QL-POC-MVA0-00001-12-10, Rev. 00C, Agitator Baffle & Nozzle Fabrication (RLD-VSL-00005); 24590-QL-POC-MVA0-00001-12-11, Rev. 00C, 193 ½" OD SBS Condensate Collection Vessel (RLD-VSL-00005). * Bechtel Status Code 1 Drawing is an "as fabricated vendor drawing" approved/accepted by Bechtel.

	Information Assessed	Source of Information	Assessment
Design	Vessel design standards are appropriate and adequate for the vessel's intended use.	Mechanical Data Sheet, Specifications and Drawings and listed above under References. ASME Boiler and Pressure Vessel Code (BPV), Section VIII, Division 1, Rules for Construction of Pressure Vessels, American Society of Mechanical Engineers.	The Material Data Sheet requires that the RLD system Plant Wash Vessel (RLD-VSL-00003) and its appurtenances are to be designed to the ASME Section VIII, Division 1 rules. Supplementary requirements are specified in the Engineering Specification for Pressure Vessel Design and Fabrication. Supplementary requirements address pressure vessel positive material identification, lifting attachment design, equipment drop evaluation, fabrication tolerances, acceptable welding procedures for the vessel and appurtenances, welder qualifications and testing records, Non-Destructive Examinations (NDE) records, lifting, packaging, handling and storage requirements. These specified requirements, standards and codes identified above are appropriate and adequate for the intended use of these vessels. The drawings show that the LAW RLD Vessel (RLD-VSL-00003) is a vertical vessel with a 192" ID x an overall height of 227" from base to top of its flat head. The vessel is supported on a cylindrical skirt (1" thick plate x approx. 2'-9" high), which in turn is supported on a base plate anchored to the concrete floor at Elev. 3'-0". The vessel top head is flat, built with 3" thick plate and the bottom is a Tori-Spherical head with minimum thickness of 3/4". The shell is made of 3/4" thick plate. The vessel has internal equipment such as an agitator, pump, thermocouples, etc., supported from the tank top or from top and bottom both. Material for the shell, bottom head, and the vessel's internal equipment is UNS N08367 (6% Molybdenum stainless steel alloy, grade AL6XN), and will hereafter be referred to as 6% Mo. The SA-240 316 stainless steel (0.030% maximum carbon content) is specified for the top head and sprayers. The supporting skirt is specified as SA-240 304 stainless steel (0.030% maximum carbon content). Both preceding listed stainless steel materials will hereafter be referred to as 316 SS and 304 SS, respectively. The operating volume is to be about 23,400 gallons and the total internal volume is to be about 25,800 gallons.

	Information Assessed	Source of Information	Assessment
Design (cont'd)	If a non-standard vessel is to be used, the design calculations demonstrate sound engineering principles of construction.	Mechanical Data Sheet, Specifications, Material Requisition, Drawings, and listed above under References; ASME Boiler and Pressure Vessel Code (BPV), Section VIII, Division 1, Rules for Construction of Pressure Vessels, American Society of Mechanical Engineers.; 24590-CM-POA-MVA0-00007-01-03, Rev. 00E, Design Calculations for Vessel (LAW-RLD-00003).	The RLD Plant Wash Vessel, RLD-VSL-00003 is a non-standard ASME Section VIII vessel. The Mechanical Data Sheet requires that the ASME Section VIII, Division 1 vessel be delivered after design, fabrication, inspection and testing with an ASME code stamp and that the vessels be nationally registered. This is a shop fabricated vessel that is delivered for service in the LAW Facility. Review of the Design Calculations document for this vessel show that it has been designed as per applicable requirements of ASME Section VIII, Division 1 Code and Specifications and other documents listed in the Material Requisition for the vessel. The aforementioned statements and the vendor fabrication drawings of the vessel reviewed demonstrate that sound engineering principles of design, construction, and fabrication have been used for the vessel.

	Information Assessed	Source of Information	Assessment
Design (cont'd)	Vessel has adequate strength, after consideration of the corrosion allowance, to withstand the operating pressure, operating temperature, and seismic loads.	Mechanical Data Sheet, Specifications, Material Requisition, and Drawings, listed above under References; ASME Boiler and Pressure Vessel Code (BPV), Section VIII, Division 1, Rules for Construction of Pressure Vessels, American Society of Mechanical Engineers.; UBC 1997, Uniform Building Code, International Conference of Building Officials; 24590-CM-POA-MVA0-00007-01-03, Rev. 00E, Design Calculations for Vessel (LAW-RLD-00003).	The Mechanical Data Sheet identifies vessel's operating pressure and temperature ranges, the material selected for the vessel, the corrosion allowance, the vessel quality level, and its seismic category, and design requirements. The Mechanical Data Sheet also requires that the vessel be designed to ASME Section VIII, Division 1 rules. This code requires specific consideration of the operating pressures, temperatures, seismic loads, and corrosion allowance in the design process. Supplementary design criteria are specified in the Engineering Specifications for Seismic Qualification Criteria and Structural Design Loads for Seismic Category III & IV Equipment and Tanks to provide for the seismic design analysis. ASME Section VIII, Div. 1 requires that corrosion allowance thickness shall be excluded from nominal vessel thickness when evaluating the adequacy of vessel components for these loads at end of life. The Engineering Specification for Seismic Qualification Criteria for Pressure Vessels provides pertinent requirements for determination of seismic loads, analysis, and acceptance criteria for the vessel and its supports. The Mechanical Data Sheet identifies the vessel's Seismic Category as SC-III. For SC-III vessels, the detailed requirements for seismic load determination (per UBC 1997) are furnished in the Specification for Structural Design Loads for Seismic Category III & IV Equipment and Tanks. Review of the Design Calculations document of this vessel show that the vessel has adequate strength after consideration of corrosion allowance to withstand the applicable operating pressure, temperature, and seismic loads for the specified design life of the vessel. Furthermore, approval and acceptance of the vendor fabrication drawings by Bechtel National Inc. (BNI) is an added assurance that all applicable requirements stated above and as described in the documents (including daughter documents) listed in Material Requisition for the vessels have been met.

	Information Assessed	Source of Information	Assessment
Foundation	Vessel foundation will maintain the load of a full vessel.	Specifications listed above under References; ASME Boiler & Pressure Vessel Code (BPV), Section VIII, Division 1, Rules for Construction of Pressure Vessels, American Society of Mechanical Engineers; 24590-WTP-DB-ENG-01-001, Rev. 4, Basis of Design; 24590-CM-POA-MVA0-00007-01-03, Rev. 00E, Design Calculations for Vessel (LAW-RLD-00003).	The Engineering Specification for Pressure Vessel Design and Fabrication requires the use of ASME Section VIII, Division 1 for the design of the vessel supports. This code ensures an adequate design for the vessel supports. Review of the Design Calculations documents of the vessel shows that the vessel's support skirt has adequate strength to maintain the load of full vessel. Furthermore, Chapter 14 of the Basis of Design document requires that the foundation underlying the vessel support must be adequate to support the loads from full vessel, which is out of scope of this assessment. The assessment of the adequacy of the underlying foundation is part of a separate integrity assessment report for the Secondary Containment of the vessel.
	If in an area subject to flooding, the vessel is anchored.	Specifications, Material Data Sheet, and Drawings listed above under References; 24590-CM-POA-MVA0-00007-01-03, Rev. 00E, Design Calculations for Vessel (LAW-RLD-00003).	Specification for Pressure Vessel Design requires designing the vessel supports and anchors to secure the buoyant vessel in case the vessel is empty and submerged to the level indicated in the Mechanical Data Sheet. The Mechanical Data Sheet for this vessel does not indicate any such conditions; therefore, the flooding consideration does not apply. However, the Design Calculations and drawing show that the vessel is anchored to the floor.
	Vessel system will withstand the effects of frost heave.	24590-WTP-DB-ENG-01-001, Rev. 4, Basis of Design.	The Basis of Design document requires that all structural foundations for outdoor equipment to extend a distance below grade that exceeds the 30" depth of the frost line. The vessel is located inside/interior of the building at Elev. 3'-0" level, and the building's lower level floor is at Elev. (-) 21'-0", therefore, the vessel's foundation is not subject to the frost heave effects.

	Information Assessed	Source of Information	Assessment
Waste Characteristics	Characteristics of the waste to be stored or treated have been identified (ignitable, reactive, toxic, specific gravity, vapor pressure, flash point, storage temperature).	Mechanical Data Sheet and Corrosion Evaluation listed above under References; 24590-WTP-PER-PR-03-002, Rev. 3, Control of Toxic Vapors and Emissions from WTP Tank and Miscellaneous Unit Systems; 24590-WTP-PER-PR-03-001, Rev. 2, Prevention of Hydrogen Accumulation in WTP Tank Systems and Miscellaneous Treatment Unit Systems.	The Mechanical Data Sheet presents process conditions and design parameters of the vessel, such as the waste specific gravity, temperatures, and pressures, etc. The Corrosion Evaluation document addresses the pH range and chemical composition of the waste and selects appropriate vessel materials and the corrosion allowance. Waste characteristics that are hazardous, such as ignitability, reactivity, and toxicity are appropriately addressed in the Toxic Vapors and Emissions document and Prevention of Hydrogen Accumulation document. These two documents do not specifically list this vessel to exhibit any hazardous characteristics. Additionally, the vessel is grounded to control ignition sources.
	Vessel is designed to store or treat the wastes with the characteristics defined above and any treatment reagents.	Corrosion Evaluation and System Design Description listed above under References.	The Corrosion Evaluation document demonstrates that the vessel is designed to process the wastes discussed above. The System Design Description discusses normal and abnormal operations for the RLD vessel. Demineralized water is used for interior surface wash down of the vessel. No other treatment regents are used.
	The waste types are compatible with each other.	System Design Description listed above under References.	The System Design Description for the LAW RLD system does not describe any operations where incompatible wastes are mixed in this vessel for processing. This RLD vessel (RLD-VSL-00003) receives waste from various LAW facility systems, drains, and sumps, which includes vessel wash liquid, condensate, and effluent. In the baseline configuration for the Pretreatment Facility, this vessel's effluent is transferred to Pretreatment Facility's Plant Wash Vessel (PWD-VSL-00044) by using vessel's pumps (RLD-PMP-00001A/B) and in the DFLAW configuration; it is transferred to the Effluent Management Facility's vessel (DEP-VSL-00002).

	Information Assessed	Source of Information	Assessment
Corrosion Protection	Vessel material and protective coatings ensure the vessel structure is adequately protected from the corrosive effects of the waste stream and external environments (expected to not leak or fail for the design life of the system).	Corrosion Evaluation, Mechanical Data Sheet and Drawings listed above under References.	The Corrosion Evaluation and Mechanical Data Sheet documents show that the LAW Plant Wash Vessel (RLD-VSL-00003) normally operates at atmospheric pressure, pH 1 to 8, and at 167 °F temperature. The vessel is designed for 15 psig pressure and 200 °F temperature. Potential acid cleaning operations of the vessel were also considered. The materials selected are 6 % Mo and 316 SS and a corrosion allowance of 0.04". The vessel's support skirt material is 304 SS. The drawings show that RLD vessel is located in Room (L-0126) at Elev. 3'-0". This room is equipped with two sumps to pump out any leaks. Therefore, the room should remain dry during normal operations, which will limit external corrosion of the vessel over the facility design life.
Corrosion Allowance	Corrosion allowance is adequate for the intended service life of the vessel.	Corrosion Evaluation and Mechanical Data Sheet listed above under References; 24590-CM-POA-MVA0-00007-01-03, Rev. 00E, Design Calculations for Vessel (LAW-RLD-00003).	The RLD vessel's material selection and corrosion allowance are furnished in the Corrosion Evaluation document and in Mechanical Data Sheet. Selection of 6% Mo, 316 SS, and 304 SS materials with a corrosion allowance of 0.04" for a service life of 40 years is adequate and appropriate for the intended use of the vessel. The Design Calculations appropriately account for the corrosion allowance of 0.04" for computing the required thickness of the vessel components.
Pressure Relief	Pressure controls (vents and relief valves) are adequately designed to ensure pressure relief if normal operating pressures in the vessel are exceeded.	Drawings and System Design Description listed above under References.	The RLD Plant Wash Vessel (RLD-VSL-00003) is designed to unrestricted overflow through 6" diameter line to the C3/C5 Drains/Sump Collection Vessel (RLD-VSL-00004) located at Elev. (-) 21'-0", as shown on the drawings and as described in the System Design Description document. The vessel is also connected to the LAW vessel vent system to prevent over pressurization of the vessel.

1

	Information Assessed	Source of Information	Assessment
Design	Vessel design standards are appropriate and adequate for the vessel's intended use.	Mechanical Data Sheet, Specification, and Drawings listed above under References. ASME Boiler and Pressure Vessel Code (BPV), Section VIII, Division 1, Rules for Construction of Pressure Vessels, American Society of Mechanical Engineers.	The Mechanical Data Sheet requires that the RLD SBS Condensate Collection Vessel (RLD-VSL-00005) and all its appurtenances are to be designed to the ASME Section VIII, Division 1 rules, which are appropriate for pressure vessels operating with mixed waste solutions over the pressure and temperature ranges specified for this vessel. Supplementary requirements are specified in the Engineering Specification for Pressure Vessel Design and Fabrication. Supplementary requirements address pressure vessel positive material identification, lifting attachment design, equipment drop evaluation, fabrication tolerances, acceptable welding procedures for the vessel and appurtenances, welder qualifications and testing records, NDE records, lifting, packaging, handling and storage requirements. These specified requirements, standards and codes identified above are appropriate and adequate for the intended use of this vessel. The drawings show that the LAW SBS Condensate Collection Vessel, RLD-VSL-00005 is a vertical vessel with a 192" ID x an overall height of 226.75", from base to top of its flat head. It is supported on a cylindrical skirt (3/8" thick plate x approx. 3'-0" high), which in turn is supported on a base plate anchored to the concrete floor at Elev. 3'-0". The vessel's top flat head is built with 2.75" thick plate and the bottom is Flanged & Dished (F & D) head with minimum thickness of 3/4". The lower and upper shell is made up of 3/4" and 1 ¾" thick plate, respectively. The vessel has internal equipment such as an agitator, pumps, and thermocouple supported from its top head. Material for the shell, bottom head, and vessel's internal equipment is SB 688 UNS N08367 (6% Molybdenum stainless steel alloy), will hereafter be referred to as 6% Mo. The material for the top head and sprayers is SA-240 316 stainless steel (0.030% maximum carbon content). The supporting skirt is made of SA-240 304 stainless steel (0.030% maximum carbon content, dual certified). Both preceding listed stainless steel materials will hereafter be referred to as 316 SS and 304 SS, respectively. The operating volume is to be about 23,400 gallons and the total internal volume is to be about 25,800 gallons.

	Information Assessed	Source of Information	Assessment
Design (cont'd)	If a non-standard vessel is to be used, the design calculations demonstrate sound engineering principles of construction.	Mechanical Data Sheet, Specifications, Material Requisition, Drawings, and listed above under References; ASME Boiler and Pressure Vessel Code (BPV), Section VIII, Division 1, Rules for Construction of Pressure Vessels, American Society of Mechanical Engineers.; 24590-QL-POC-MVA0-00001-03-16, Rev. 00D, Design Calculations for Vessel (LAW-RLD-00005); 24590-QL-POC-MVA0-00001-03-00023, Rev. 00A, Design Calculations for Vessel (LAW-RLD-00005); 24590-QL-POC-MVA0-00001-03-22, Rev. 00C, Design Calculations for Vessel (LAW-RLD-00005); 24590-QL-POC-MVA0-00001-14-02, Rev. 00B, Design Calculations for Vessel (LAW-RLD-00005).	The RLD SBS Condensate Collection Vessel, RLD-VSL-00005 is a non-standard ASME Section VIII vessel. The Mechanical Data Sheet requires that the ASME Section VIII, Division 1 vessel be delivered after design, fabrication, inspection and testing with an ASME code stamp and that the vessel be nationally registered. This is a shop fabricated vessel that is delivered for service in the LAW Facility. Review of the Design Calculations documents for this vessel show that it has been designed as a standard vessel per applicable requirements of ASME Section VIII, Division 1 Code and Specifications and other documents listed in the Material Requisition for the vessel. The aforementioned statements and the vendor fabrication drawings of the vessel reviewed demonstrate that sound engineering principles of design, construction, and fabrication have been used for the vessel.

	Information Assessed	Source of Information	Assessment
Design (cont'd)	Vessel has adequate strength, after consideration of the corrosion allowance, to withstand the operating pressure, operating temperature, and seismic loads.	Mechanical Data Sheet, Specifications, Material Requisition, and Drawings, listed above under References; ASME Boiler and Pressure Vessel Code (BPV), Section VIII, Division 1, Rules for Construction of Pressure Vessels, American Society of Mechanical Engineers.; UBC 1997, Uniform Building Code, International Conference of Building Officials; 24590-QL-POC-MVA0-00001-03-16, Rev. 00D, Design Calculations for Vessel (LAW-RLD-00005); 24590-QL-POC-MVA0-00001-03-00023, Rev. 00A, Design Calculations for Vessel (LAW-RLD-00005); 24590-QL-POC-MVA0-00001-003-22, Rev. 00C, Design Calculations for Vessel (LAW-RLD-00005); 24590-QL-POC-MVA0-00001-14-02, Rev. 00B, Design Calculations for Vessel (LAW-RLD-00005).	The Mechanical Data Sheet identifies vessel's operating pressure and temperature ranges, the material selected for the vessel, the corrosion allowance, the vessel quality level, and its seismic category, and design requirements. The Mechanical Data Sheet also requires that the vessel be designed to ASME Section VIII, Division 1 rules. This code requires specific consideration of the operating pressures, temperatures, seismic loads, and corrosion allowance in the design process. Supplementary design criteria are specified in the Engineering Specifications for Seismic Qualification Criteria and Structural Design Loads for Seismic Category III & IV Equipment and Tanks to provide for the seismic design analysis. ASME Section VIII, Div. 1 requires that corrosion allowance thickness shall be excluded from nominal vessel thickness when evaluating the adequacy of vessel components for these loads at end of life. The Engineering Specification for Seismic Qualification Criteria for Pressure Vessels provides pertinent requirements for determination of seismic loads, analysis, and acceptance criteria for the vessel and its supports. The Mechanical Data Sheet identifies the vessel's Seismic Category as SC- III. For SC-III vessels, the detailed requirements for seismic load determination (per UBC 1997) are furnished in the Specification for Structural Design Loads for Seismic Category III & IV Equipment and Tanks. Review of the Design Calculations documents of this vessel shows that the vessel has adequate strength after consideration of corrosion allowance to withstand the applicable operating pressure, temperature, and seismic loads for the specified design life of the vessel. Furthermore, approval and acceptance of the vendor fabrication drawings by BNI is an added assurance that all applicable requirements stated above and as described in the documents (including daughter documents) listed in Material Requisition for the vessels have been met.

	Information Assessed	Source of Information	Assessment
Foundation	Vessel foundation will maintain the load of a full vessel.	Specifications listed above under References; ASME Boiler & Pressure Vessel Code (BPV), Section VIII, Division 1, Rules for Construction of Pressure Vessels, American Society of Mechanical Engineers; 24590-WTP-DB-ENG-01-001, Rev. 4, Basis of Design; 24590-QL-POC-MVA0-00001-03-16, Rev. 00D, Design Calculations for Vessel (LAW-RLD-00005).	The Engineering Specification for Pressure Vessel Design and Fabrication requires the use of ASME Section VIII, Division 1 for the design of the vessel supports. This code ensures an adequate design for the vessel supports. Review of the Design Calculations document of the vessel shows that the vessel's support skirt has adequate strength to maintain the load of full vessel. Furthermore, Chapter 14 of the Basis of Design document requires that the foundation underlying the vessel support must be adequate to support the loads from full vessel, which is out of scope of this assessment. The assessment of the adequacy of the underlying foundation is part of a separate integrity assessment report for the Secondary Containment of the vessel.
	If in an area subject to flooding, the vessel is anchored.	Specifications and Material Data Sheet, and Drawings listed above under References; 224590-QL-POC-MVA0-00001-03-016, Rev. 00D, Design Calculations for Vessel (LAW-RLD-00005).	Specification for Pressure Vessel Design requires designing the vessel supports and anchors to secure the buoyant vessel in case the vessel is empty and submerged to the level indicated in the Mechanical Data Sheet. The Mechanical Data Sheet for this vessel does not indicate any such conditions; therefore, the flooding consideration does not apply. However, the Design Calculations and drawing show that the vessel is anchored to the floor.
	Vessel system will withstand the effects of frost heave.	24590-WTP-DB-ENG-01-001, Rev. 4, Basis of Design.	The Basis of Design document requires that all structural foundations for outdoor equipment to extend a distance below grade that exceeds the 30" depth of the frost line. The vessel is located inside/interior of the building at Elev. 3'-0" level, and the building's lower level floor is at Elev. (-) 21'-0", therefore, the vessel's foundation is not subject to the frost heave effects.

	Information Assessed	Source of Information	Assessment
Waste Characteristics	Characteristics of the waste to be stored or treated have been identified (ignitable, reactive, toxic, specific gravity, vapor pressure, flash point, storage temperature).	Mechanical Data Sheet and Corrosion Evaluation listed above under References; 24590-WTP-PER-PR-03-002, Rev. 3, Control of Toxic Vapors and Emissions from WTP Tank and Miscellaneous Unit Systems; 24590-WTP-PER-PR-03-001, Rev. 2, Prevention of Hydrogen Accumulation in WTP Tank Systems and Miscellaneous Treatment Unit Systems.	The Mechanical Data Sheet presents process conditions and design parameters of the vessel, such as the waste specific gravity, temperatures, and pressures, etc. The Corrosion Evaluation document addresses the pH range and chemical composition of the waste and selects appropriate vessel materials and the corrosion allowance. Waste characteristics that are hazardous, such as ignitability, reactivity, and toxicity are appropriately addressed in the Toxic Vapors and Emissions document and Prevention of Hydrogen Accumulation document. These two documents do not specifically list this vessel to exhibit any hazardous characteristics. Additionally, the vessel is grounded to control ignition sources.
	Vessel is designed to store or treat the wastes with the characteristics defined above and any treatment reagents.	Corrosion Evaluation and System Design Description listed above under References.	The Corrosion Evaluation document demonstrates that the vessel is designed to process the wastes discussed above. The System Design Description document discusses normal and abnormal operations for the RLD vessel. Demineralized water is used for interior surface wash down of the vessel. No other treatment regents are used.
	The waste types are compatible with each other.	System Design Description listed above under References.	The System Design Description document for the LAW (RLD) does not describe any operations where incompatible wastes are mixed in these vessels for processing. This RLD vessel (RLD-VSL-00005) receives SBS condensate and WESP drain liquid from C3/C5 Drains/Sump Collection Vessel (RLD-VSL-00004) for short term storage. In the baseline configuration of the PTF, the collected liquid is mixed and transferred to the LAW SBS condensate receipt vessels (TLP-VSL-00009A/B) for further processing and in the DFLAW configuration; it is transferred to the Effluent Management Facility's vessel (DEP-VSL-00002).

	Information Assessed	Source of Information	Assessment
Corrosion Protection	Vessel material and protective coatings ensure the vessel structure is adequately protected from the corrosive effects of the waste stream and external environments (expected to not leak or fail for the design life of the system).	Corrosion Evaluation, Drawings, and Mechanical Data Sheet listed above under References.	The Corrosion Evaluation and Mechanical Data Sheet show that the LAW SBS Condensate Collection Vessel, RLD-VSL-00005 normally operates at atmospheric pressure, pH 1 to 7.83, and at 167 °F temperature. The vessel is designed for 15 psig pressure and 200 °F maximum temperature. Demineralized water is used for interior surface wash down of the vessel. The materials selected are 6 % Mo and 316 SS and a corrosion allowance of 0.04". This RLD vessel is located in Room (L-0126) at Elev. 3'-0". The vessel's support skirt material is 304 SS. This room is equipped with two sumps to pump out any leaks. Therefore, the room should remain dry during normal operations, which will limit external corrosion of the vessel over the facility design life.
Corrosion Allowance	Corrosion allowance is adequate for the intended service life of the vessel.	Corrosion Evaluation and Mechanical Data Sheet listed above under References; 24590-QL-POC-MVA0-00001-03-16, Rev. 00D, Design Calculations for Vessel (LAW-RLD-00005).	The RLD vessel's material selection and corrosion allowance are furnished in the Corrosion Evaluation document and in Mechanical Data Sheet. Selection of 6% Mo, 316 SS, and 304 SS materials with a corrosion allowance of 0.04" for a service life of 40 years is adequate and appropriate for the intended use of the vessel. The Design Calculations appropriately account for the corrosion allowance of 0.04" for computing the required thickness of the vessel components.
Pressure Relief	Pressure controls (vents and relief valves) are adequately designed to ensure pressure relief if normal operating pressures in the vessel are exceeded.	Drawings and System Design Description listed above under References.	The RLD SBS Condensate Collection Vessel, RLD-VSL-00005 is designed to unrestricted overflow through 6" diameter line to the RLD Plant Wash Vessel (RLD-VSL-00003) co-located in the same Room (L-0126) at Elev. 3'-0", as shown on the drawings and described in the System Design Description document. The vessel is also connected to the LAW vessel vent system to prevent over pressurization of the vessel.

Master Distribution Schedule for WTP Project Subcontract Management Group

SUBMITTAL TRANSMITTAL:	☒ **First Submittal**	☐ **Re-Submittal**	☐ **QVRP Package**	☐ **RFI**
☒ **No Review Required**	☐ **No Review Required Re-Submittal**	☐ **Submittal Supplement**		
CORRESPONDENCE:	☐ **With Attachment**	☐ **W/O Attachment (letter only)**	☐ **RFI**	
	☐ **Fax as Original (Letter Only)**	☐ **Fax as Original (With Attachment)**		
☐ **Pre-Award/Award Package**		☐ **Executed Change Order Package**		
☐ **Executed Amendment Package**		☐ **Back Charge**	☐ **Closeout Package**	

Subcontract Number:	24590-CM-HC4-HXYG-00240
Subcontract Title:	Tank Integrity Design Assessments
Subcontractor Name:	AREVA Federal Services, LLC
Subcontract Administrator:	Tess Klatt

PDC Document Number	Rev	Document Title	Rev
24590-CM-HC4-HXYG-00240-02-00021	00A	IQRPE Structural Integrity Assessment Report for LAW RLD Vessels (RLD-VSL-00003 and RLD-VSL-00005) (IA-3019128-000)	N/A
Associated VQP# _N/A_____			
Associated GRCN # _N/A_____			

DUE BACK TO SUBCONTRACT ADMINISTRATOR NO LATER THAN: N/A

INCOMING DISTRIBUTION

Name	MSIN/ E-mail	Original	Copy	Copy of cover sheet / transmittal only	Primary File Index	Alternate File Index	Assigned Action or Remarks
PDC		X			B.19		
Tess Klatt	E-mail		X				
Dan Pfluger	E-mail		X				
Barry Curn	E-mail		X				
Dan Robertson	E-mail		X				
Bret Peck	E-mail		X				
Jeremy Wilkins	E-mail		X				
	E-mail		X				

Master Distribution Schedule for WTP Project Subcontract Management Group

Subcontract Number:	24590-CM-HC4-HXYG-00240
Subcontract Title:	Tank Integrity Design Assessments
Subcontractor Name:	AREVA Federal Services, LLC
Subcontract Administrator:	Tess Klatt

OUTGOING DISTRIBUTION FOR RETURNED STATUSED STICKER SUBMITTALS

Name	MSIN/ E-mail	Original	Copy	Copy of cover sheet / transmittal only	Primary File Index	File Index Alternate	Assigned Action or Remarks
PDC		X					

Table III.10.E.B – LAW Vitrification Plant Tank Systems Description

Dangerous and/or Mixed Waste Tank Systems Name	Unit Designation	Engineering Description (Drawing Nos, Specification Nos, etc.)	Narrative Description, Tables & Figures	Maximum Capacity (gallons)
LOP-VSL-00001 (LAW Melter 1 SBS Condensate Vessel) LOP-VSL-00002 (LAW Melter 2 SBS Condensate Vessel)		-M6-LOP-P0001, Rev 2 -M6-LOP-P0002, Rev2 -MV-LOP-P0001, Rev 0 -MV-LOP-P0002, Rev 0 -MVD-LOP-00004, Rev 6 -MVD-LOP-00005, Rev 6 -N1D-LOP-00002, Rev 3 -P1-P01T-00002, Rev 7		
LAW Vitrification Plant Radioactive Liquid Waste Disposal System RLD-VSL-00003 (Plant Wash Vessel) RLD-VSL-00004 (C3/C5 Drains/Sump Collection Vessel) RLD-VSL-00005 (SBS Condensate Collection Vessel)	RLD	**24590-LAW** -M5-V17T-0~~P~~0014, Rev 6~~2~~ -M6-RLD-00001001, Rev 0 -M6-RLD-00001002, Rev 0 -M6-RLD-00001003, Rev 0 -M6-RLD-00001004, Rev 0 -M6-RLD-00001005, Rev 0 -M6-RLD-00001006, Rev 0 -M6-RLD-00002001, Rev 0 -M6-RLD-00002002, Rev 0 -M6-RLD-00002003, Rev 0 -M6-RLD-00002004, Rev 0 -M6-RLD-00002005, Rev 0 -M6-RLD-00003001, Rev 0 -M6-RLD-00003002, Rev 2 -M6-RLD-00003003, Rev 2	Section 4E.2.3; Tables 4-3 and 4-6; and Figures C1-1 and C1-3 of Operating Unit Group 10, Addendum C of this Permit.	RLD-VSL-00003 = 25,780 RLD-VSL-00004 = 7696 RLD-VSL-00005 = 25,780

Quarter Ending September 2017 24590-LAW-PCN-ENV-17-005

Hanford Facility RCRA Permit Modification Notification Form
Part III, Operating Unit 10
Waste Treatment and Immobilization Plant

Index

Page 2 of 3: Hanford Facility RCRA Permit, Part III, Operating Unit 10, Waste Treatment and Immobilization Plant

Replace the Piping and Instrumentation Diagram (P&ID) of the Low-Activity Waste (LAW) Radioactive Liquid Waste Disposal System C3/C5 Drains/Sump Collection Vessel RLD-VSL-00004 in Appendix 9.2 of the Dangerous Waste Permit (DWP).

Replace the Mechanical Data Sheet for the Melter Submerged Bed Scrubbers (LOP-SCB-00001 and -00002) in Appendix 9.6 of the DWP.

Replace the Drawing Change Notice for the LAW Secondary Offgas/Vessel Vent Process System Tank Modifications (LVP-TK-00001) in Appendix 9.6 of the DWP.

Replace the Engineering Specification for the LAW Thermal Catalytic Oxidizer/Reducer in Appendix 9.7 of the DWP.

Submitted by Co-Operator:

Roger J Landon 9/25/17
Roger J. Landon Date

Reviewed by ORP Program Office:

10/11/17
J. F. Grindstaff Date

Quarter Ending September 2017 24590-LAW-PCN-ENV-17-005

Hanford Facility RCRA Permit Modification Notification Form	
Unit: **Waste Treatment and Immobilization Plant**	Permit Part: **Part III, Operating Unit 10**

Description of Modification:

The purpose of this Class 1 prime modification is to replace the following documents and drawings in Appendices 9.2, 9.6 and 9.7 of the DWP:

Appendix 9.2			
Replace:	24590-LAW-M6-RLD-00002001, Rev. 0	With:	24590-LAW-M6-RLD-00002001, Rev. 1
Appendix 9.6			
Replace:	24590-LAW-MKD-LOP-P0008, Rev. 0	With:	24590-LAW-MKD-LOP-00008, Rev. 2
Replace:	24590-LAW-VDCN-M-13-00001	With:	24590-LAW-MT-LVP-00005001, Rev. 0
Appendix 9.7			
Replace:	24590-LAW-3PS-MBTV-T0001, Rev. 5	With:	24590-LAW-3PS-MBTV-T0001, Rev. 6

This modification requests Ecology approval and incorporation into the permit the specific changes to the documents and drawings. These documents and drawings include changes provided in applicable document change forms (e.g., DCN, SCN, SDDR, FCN, FCR, etc.). In addition, the documents and drawings include changes associated with the resolution to comments on change documents since the issuance of the last revision of the permitted documents.

Significant changes to the P&ID (24590-LAW-M6-RLD-00002001, Rev. 1) for Radioactive Liquid Waste Disposal System C3/C5 Drains/Sump Collection Vessel RLD-VSL-00004 are summarized below:

- Added notes to the Notes section and modified the Reference section.
- Installed a flange, instead of a welded cap, at the end of line RLD-WS-00057-S11C-04 (Grid D6).
- Corrected the ASX-SMPLR-00013 Sample Return line number from RLD-ZS-03559-W11A-02 to RLD-ZS-03359-W11A-02 (Grid G8).
- Added a new off-sheet connector (LAW-M6-RLD-00003003), new lines RLD-ZF-01472-S11B-02, RLD-ZF-01472-W31A-02 with secondary containment and RLD-ZF-64678-S11B-01 to RLD-SUMP-00028 (Grids C2 to C8).
- Added a new off-sheet connector (LAW-M6-SHR-00001001), new lines SHR-JS-17098-S11K-01 and RLD-JS-03445-S11K-01 and valves to vessel RLD-VSL-00004 (Grids D4 to D8).
- Added a restricting orifice RLD-RO-00037 upstream of RLD-RO-00022 (Grid E4).
- Revised off-sheet connectors (Grids F2, G8 and H8).

Significant changes to the mechanical data sheet (24590-LAW-MKD-LOP-00008, Rev. 2) for the Melter Submerged Bed Scrubbers (LOP-SCB-00001 and -00002) are summarized below:

- Revised the reference P&IDs, process data sheets and vessel drawings.
- Updated the Design Data section, such as data for quality level, seismic category, design specific gravity, maximum operating volume, total volume, fabrication specs, vessel operating temperature and seismic design.
- Revised the Materials of Construction section, such as information on gaskets and bolts.
- Revised the notes in the Remarks section.
- Updated the Equipment Cyclic Data Sheet and added a new note.
- Added a new list of reference documents.

This modification requests the replacement of Drawing Change Notice 24590-LAW-VDCN-M-13-00001, which was superseded by Field Changes 24590-WTP-FC-M-14-0148 and 24590-WTP-FC-M-15-0149. This Drawing Change Notice is being replaced by 24590-LAW-MT-LVP-00005001, Rev. 0, which shows the revised design of tank LVP-TK-00001.

Quarter Ending September 2017 24590-LAW-PCN-ENV-17-005

Significant changes to the engineering specification (24590-LAW-3PS-MBTV-T0001, Rev. 6) for the LAW Thermal Catalytic Oxidizer/Reducer are summarized below:

- Added new subsection 1.3.13 (FE/FT-0529 and FE/FT-0539) in Section 1.3 (Work by Others).
- Incorporated changes listed in the Revision History section.
- Revised subsection 3.7.3.1 to delete FE-0529 and FE-0539 from the list of equipment that require "suitable for ammonia" labels.
- Deleted subsection 3.16.4.10 (Testing and Inspection Requirements for Flowmeters to be performed by the Completion Supplier).
- Revised subsection 3.17.13 to delete flow meters from the list of equipment supplied by the supplier or reused by WTP.
- Added Supplier Deviation Disposition Request (SDDR) documents to Section 11 (References).

This PCN updates information in Appendices 9.2, 9.6 and 9.7 to reflect current design. These DWP components may be re-evaluated to confirm design adequacy. If the re-evaluation results in future design changes, the changes will be reviewed by Ecology in subsequent permit modifications.

The following outstanding change documents have been submitted to Ecology pursuant to Permit Condition III.10.C.9.h and are maintained in the WTP Operating Record:

For 24590-LAW-M6-RLD-00002001, Rev. 1, the change document is:

- 24590-LAW-M6N-RLD-00091 – provided to Ecology in milk run (CCN 296055)
- 24590-LAW-M6N-RLD-00096 – provided to Ecology in milk run (CCN 297313)

For 24590-LAW-MT-LVP-00005001, Rev. 0, the change documents are:

- 24590-LAW-MTN-LVP-00002
- 24590-LAW-MTN-LVP-00003 – provided to Ecology in milk run (CCN 292005)

For 24590-LAW-3PS-MBTV-T0001, Rev. 6, the change documents are:

- 24590-WTP-SDDR-MS-15-00069 – provided to Ecology in milk run (CCN 283043)
- 24590-WTP-SDDR-MS-16-00002 – provided to Ecology in milk runs (CCN 283049 and CCN 283050)

In accordance with Permit Condition III.10.C.2.e, this permit modification sent to Ecology may include page changes to the Permit, attachments, and permit application supporting documentation.

WAC 173-303-830 Modification Class:	Class 1	Class [1]1	Class 2	Class 3
Please mark the Modification Class:		X		

Enter relevant WAC 173-303-830, Appendix I Modification citation number: N/A

Enter wording of WAC 173-303-830, Appendix I Modification citation:

In accordance with WAC 173-303-830(4)(d)(i), this modification notification is requested to be reviewed and approved as a Class [1]1 modification. WAC 173-303-830(4)(d)(ii)(A) states, "Class 1 modifications apply to minor changes that keep the permit current with routine changes to the facility or its operation. These changes do not substantially alter the permit conditions or reduce the capacity of the facility to protect human health or the environment. In the case of Class 1 modifications, the director may require prior approval."

Modification Approved/Concur: [X] Yes [ ] Denied (state reason below)

Reason for denial:

Reviewed by Ecology:

S. Dahl 3/6/18

S. Dahl Date

24590-LAW-M6-RLD-00002001

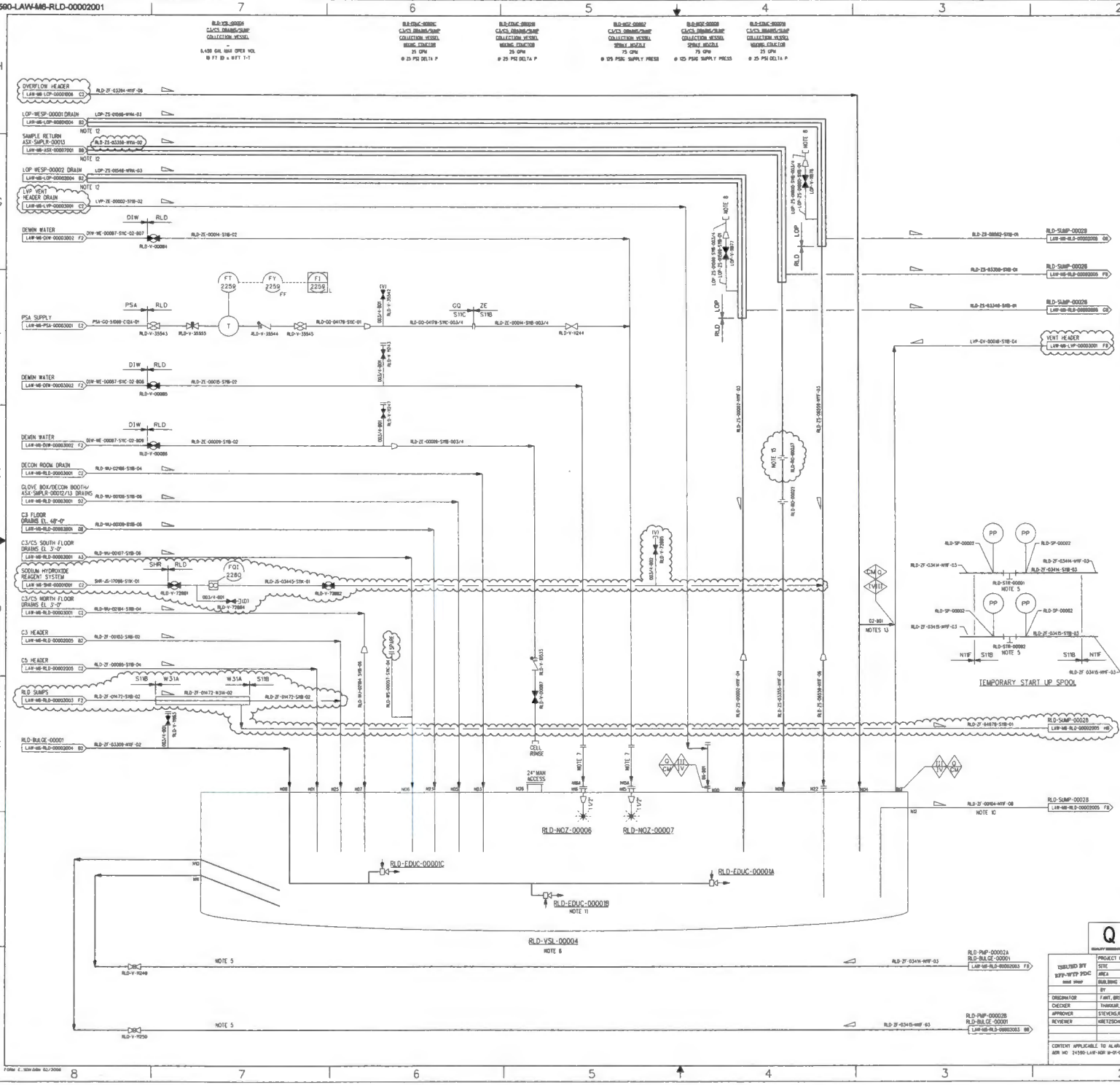

NOTES:

1. SEE DRAWINGS 24590-WTP-M6-S0-00001 THROUGH 24590-WTP-M6-S0-00008 FOR GENERAL NOTES, SYMBOLS AND LEGEND, AND GENERAL SLOPE REQUIREMENTS.
2. CONTENTS OF THIS DOCUMENT ARE DANGEROUS WASTE PERMIT AFFECTING.
3. THE PRESSURE BOUNDARY FOR ALL COMPONENTS ON THIS DRAWING IS QUALITY LEVEL QM AND SEISMIC CATEGORY SC-IV, UNLESS OTHERWISE NOTED.
4. ALL LINES SHOWN ON THIS DRAWING SHALL BE FREE DRAINING, UNLESS OTHERWISE NOTED
5. WELDED TEE STRAINERS (S1B) AND PRESSURE POINTS WILL BE REMOVED PRIOR TO STARTUP AND REPLACED WITH NW PIPING PER SPECIFICATION. STRAINER IS LOCATED INSIDE THE CELL.
6. ALL DIPPED NON-INSTRUMENT LINES TERMINATE INSIDE THE VESSEL AT 6 INCHES ABOVE THE VESSEL BOTTOM HEAD
7. SPOOL PIECE TO FACILITATE SPRAY NOZZLE REMOVAL
8. LOCATE HOSE CONNECTION IN CORRIDOR AT ELEVATION 3'-0"
9. ALL VESSEL INTERNAL PIPING IS CONSTRUCTED OF 316L SS.
10. PROVIDE A 1/2" DIA HOLE AS SIPHON BREAKER.
11. EDUCTOR TO POINT DOWNWARD FOR SOLIDS AGITATION
12. DOUBLE WALLED PIPING REQUIRED IN C1/C2 AREAS. DOUBLE WALLED PIPING TO TERMINATE INSIDE C5 ROOM L-B001B.
13. THIS 2" PIPE IS A VENT TO SUPPORT GRAVITY FLOW IN 6" OVERFLOW HEADER. LOCATE ENTRANCE OF 2" VENT PIPE AT ELBOW IN 6" LINE AT LEAST 2' ABOVE RLD-VSL-00004
14. THIS DRAWING IS CONVERTED FROM A SINGLE SHEET TO MULTI-SHEET DRAWINGS AND, IN PART, SUPERSEDES 24590-LAW-M6-RLD-00002 REV 6. THIS DRAWING INCLUDES INFORMATION FROM 24590-LAW-M6N-20-00002, 24590-LAW-M6N-RLD-00017 AND -00050.
15. RLD-RO-00037 SHALL BE LOCATED AT LEAST 2 FEET UPSTREAM FROM RLD-RO-00022.
16. REVISION 1: INCORPORATED 24590-WTP-FC-P-13-0174, 24590-LAW-M6LN-RLD-00001, 24590-LAW-M6N-M8OT-00043, AND 24590-LAW-M6N-RLD-00083. ROUTED 5M SODIUM HYDROXIDE LINE FROM SHR-TK-00003 TO RLD-VSL-00004 TO ALLOW FOR MANUAL CONTROL OF pH IN THE VESSEL

HOLD/OPEN ITEMS:

NONE

REFERENCE:

1. 24590-LAW-320-RLD-00001, LAW FACILITY RADIOACTIVE LIQUID WASTE DISPOSAL (RLD) SYSTEM DESIGN DESCRIPTION.

Please note that uranium, thorium, neptunium, and radioactive radionuclides as defined in the Atomic Energy Act of 1954 (AEA), are regulated at the U.S. Department of Energy (DOE) facilities exclusively by DOE orders pursuant to the AEA. Authority DOE asserts that pursuant to AEA, these and isotopes responsibility and authority as "exclusive sources: spent nuclear and by-product radionuclides at DOE-owned Nuclear Facilities. Information contained herein on radioactivity is provided for statistics and/or information only.

DRAWING INDEX	
DWG NO	TITLE
24590-LAW-M6-RLD-00002001	RLD SYSTEM RLD-VSL-00004
24590-LAW-M6-RLD-00002002	RLD SYSTEM RLD-VSL-00004
24590-LAW-M6-RLD-00002003	RLD SYSTEM RLD-BULGE-00001
24590-LAW-M6-RLD-00002004	RLD SYSTEM RLD-BULGE-00001
24590-LAW-M6-RLD-00002005	RLD SYSTEM RLD-SUMP-00010/11/28

REV	DESCRIPTION	ORG	CHKD	RVWD	APVD	DATE
1	REVISED PER NOTE 16	CS	DF	[illegible]	[illegible]	5/11/16
0	ISSUED FOR CONSTRUCTION; SEE NOTE 14	BF	SI	SW/SS	RS/JS	08/02/10

REVISION HISTORY

ISSUED BY WTP-WTP PDC and sheet		
	PROJECT No.	24590
	SITE	HANFORD
	AREA	200E
	BUILDING No.	20
	BY	DATE
ORIGINATOR	FANT, BRIAN	8/3/10
CHECKER	THANGAVAR, SURENDRA	8/1/10
APPROVER	STEVENS,R/SCHWEIDER,J	8/2/10
REVIEWER	KRETZSCHMAR,S/SMITH,S	8/1/10

CONTENT APPLICABLE TO AL4687 ☐ YES ☐ NO
ADR NO 24590-LAW-ADR W-01-001 REV 2

RIVER PROTECTION PROJECT
WASTE TREATMENT PLANT
2435 STEVENS CENTER PLACE
RICHLAND, WA 99354

CONTRACT No DE-AC27-01RV14136

P&ID - LAW
RADIOACTIVE LIQUID WASTE DISPOSAL SYSTEM
C3/C5 DRAINS/SUMP COLLECTION
RLD-VSL-00004

SCALE NONE

24590-LAW-M6-RLD-00002001

REV 1

E-SIZE - 44x34
COMPUTER GENERATED DRAWING. MANUAL REDRAW CHANGES ARE PROHIBITED

4/18/2016 9:40:03 AM

PLOTTED BY [redacted]

ISSUED BY
RPP-WTP PDC

R11728178

BECHTEL	**MECHANICAL DATA SHEET: VESSEL**	**PLANT ITEM No.** ***24590-LAW-MK-LOP-SCB-00001, 24590-LAW-MK-LOP-SCB-00002***

Project:	***RPP-WTP***	P&ID:	***24590-LAW-M6-LOP-00001001, -00002001*** 2
Project No:	***24590***	Process Data Sheet:	***N/A***
Project Site:	***Hanford***	Vessel Drawing	***24590-LAW-MK-LOP-00001001, 24590-LAW-MK-LOP - 00001002, 24590-LAW-MK-LOP-00002*** 2
Description:	***MELTER 1 & 2 Submerged Bed Scrubber*** 2		

Reference Data

Charge Vessels (Tag Numbers)	***None***
Pulsejet Mixers / Agitators (Tag Numbers)	***None***
RFDs/Pumps (Tag Numbers)	***None***

Design Data

Quality Level		***Q*** 2	Fabrication Specs	***24590-WTP-3PS-MV00-T0001***		
Seismic Category		***SC-III*** 2	Design Code	***ASME VIII Div 1***		
Service/Contents		***Radioactive liquid***	Code Stamp	***Yes***		
Design Specific Gravity		***1.01*** 2	NB Registration	***Yes***		
Maximum Operating Volume	gal	***3,329*** 2	Weights (lbs)	Empty	Operating	Test
Total Volume	gal	***4,308*** 2	Estimated	***37,300***	***78,800***	***82,500***
			Actual *			

Inside Diameter	inch	***120***			Wind Design	***N/A***	
Length/Height (TL-TL)	inch	***78***			Snow Design	***N/A***	
		Vessel Operating	Vessel Design	Coil/Jacket Design	Seismic Design	***24590-WTP-3PS-MV00-T0002 24590-WTP-3PS-FB01-T0001***	
Internal Pressure	psig	***ATM***	***15***	***125 (Note 2)***	Seismic Base Moment *	ft*lb	
External Pressure	psig	***3.6***	***FV***	***-***	Postweld Heat Treat	***Not Required***	
Temperature	°F	***122*** 2	***237 (Note 7)***	***237 (Note 2)***	Corrosion Allowance	Inch	***(Note 8)***
Min Design Metal Temp	°F	***41***			Hydrostatic Test Pressure *	psig	

Materials of Construction

Component	Material	Minimum Thickness / Size	Containment
Top Head	***SB575 N06022***	***See Drawing***	***Auxiliary***
Shell	***SB575 N06022***	***See Drawing***	***Primary***
Bottom Head	***SB575 N06022***	***See Drawing***	***Primary***
Support	***SA240 304 (Notes 5)***	***See Drawing***	***N/A***
Internal Coils/Half-Pipe Coils	***SB622 N06022/ SA312 304(Note 5)***	***See Drawing***	***N/A***
Internals	***SB575 N06022 / SB622 N06022 (Note 9)***	***See Drawing***	***Thermowell Primary***
Pipe	***SB622/SB619 N06022 SB575 N06022 (Note 10)***	***See Drawing***	***Note 4***
Forgings/ Bar stock	***SB564 N06022***	***See Drawing***	***N/A***
Gaskets 2	***EPDM / Garlock Helicoflex/Flexpro***	***N/A***	***N/A***
Bolting 2	***SA193 Grade B16 (Hastalloy C-276 Bolt and nuts)***	***N/A***	***N/A***

Miscellaneous Data

Orientation	***Vertical***	Support Type	***Skirt***
Insulation Function	***N/A***	Insulation Material	***None***
Insulation Thickness (inch)	***N/A***	Internal Finish	***Welds descaled as laid.***
		External Finish	***Shell welds under half pipe coils to be ground smooth. Others descaled as laid.***

Please note that source, special nuclear, and byproduct materials, as defined in the Atomic Energy Act of 1954 (AEA) are regulated at the U. S. Department of Energy (DOE) facilities exclusively by DOE acting pursuant to its AEA authority. DOE asserts that pursuant to AEA, it has sole and exclusive responsibility and authority to regulate source, special nuclear, and byproduct materials at DOE-owned nuclear facilities. Information contained herein on radionuclides is provided for process description purposes only.

BECHTEL	**MECHANICAL DATA SHEET: VESSEL**	**PLANT ITEM No.** ***24590-LAW-MK-LOP-SCB-00001, 24590-LAW-MK-LOP-SCB-00002***

Remarks

**** To be determined by the vendor.***

Note 1 : This vessel has an internal removable bed or column. This bed has different operating characteristics than the vessel and is noted in the localized features section on sheet 2.
Note 2 : The coil operating conditions are 90 psig and 50° F.
Note 3 : The bed packing material is ceramic spheres 1" dia and weigh 115 lb/ft³.
Note 4 : Nozzle necks below the high operating liquid level are primary, the others are auxiliary.
Note 5 : SA240 304 & SA312 304 stainless steel material shall have carbon content of 0.030% maximum. Non welded items are excluded from this requirement.
Note 6 : Deleted.
Note 7 : Down comer temperature is 1,112 deg°F. Thermal effect of this temperature on the flat head cover shall be considered as an upset condition, for the top head & flat head flange. Room temperature 113 deg°F, normal operation is at 122 deg°F.
Note 8 : Corrosion allowance for surfaces exposed to process liquid shall be 0.04". Corrosion allowance of 0.04" shall be applied to stainless steel surfaces exposed to cooling coil fluid. If exposed surfaces to cooling coil fluid is vessel alloy material, corrosion allowance of 0.01" shall be applied.
Note 9 : Internal fasteners shall be of alloy N06022 material.
Note 10 : SB275 N06022 material allowed for 4" and 6" nozzles rolled from plate to meet wall thickness requirements. Full RT inspection mandatory
Note 11 : Contents of this document are Dangerous Waste Permit Affecting.
Note 12 : Beta/gamma dose exposure rate is 2.10E-01 Rad/hr.
Note 13 : Nozzle loads are not to exceed loads described in CCN 273289 and 273299.

Equipment Cyclic Data Sheet

Component Plant Item Number:	
Component Description	***Vessel***

The information below is provisional and envelopes operational duty for fatigue assessment. It is not to be used as operational data.

Materials of Construction	***SB575 N06022 (Hastelloy C -22)***
Design Life	***40 years***
Component Function and Life Cycle Description	***The SBS is a semi-passive device designed for aqueous scrubbing of entrained radioactive particulate from the melter offgas. It also serves to cool and condense the melter vapor emissions.*** ***Melter offgas is nominally cooled from 536°F while feeding (from 1087°F when idled) to 122°F. Operation within and between these two modes are the predominate conditions the vessel will encounter.*** ***Design parameters for the cooling coils is to cool the offgas from 536°F to a maximum of 140°F.*** ***Occasional process upsets will direct undiluted offgas to the SBS at temperatures near 1112°F, where the SBS will cool the gasses to 140°F.*** ***Non-routine, or heavy maintenance would include the change out of a Vitrification Melter or other heavy non-routine maintenance requiring manned entry to the wet process cell. This is expected to occur annually. During heavy maintenance, the SBS would be isolated and allowed to remain at ambient temperature or approximately 41 to 122°F.***

BECHTEL	**MECHANICAL DATA SHEET: VESSEL**	**PLANT ITEM No.** ***24590-LAW-MK-LOP-SCB-00001, 24590-LAW-MK-LOP-SCB-00002***

Load Type		Min	Max	Number of Cycles	Comment
Design Pressure	psig	***FV***	***15***	***10***	***Nominal Assumption***
Operating Pressure	psig	***-5.6*** 2	***0***	***100***	***Bed min. -0 .36, max. 0.*** 2
Operating Temperature	°F	***41*** 2	***122*** 2	***240*** 2	***Nominal Assumption*** 2
Contents Specific Gravity		***0.997*** 2	***1.01*** 2	***N/A*** 2	***Nominal operating is 1.0, assume annual flushout and replace with clean water.***
Contents Level	inch	***Empty***	***84*** 2	***40*** 2	***Nominal operating is 57 inch, assume annual 3x flush out and replace with clean water.***

Localized Features	Temperature Range (°F)	Number of Cycles / Comment
Opening for Nozzle (N2) on the Top Head Cover Plate 2	***41 / 536 / 1087 / 1112*** 2	***Assume normal mode is feeding (536°F), with 40 cycles to upset (1112°F) and back to idle (1087°F).*** 2 ***Assume normal mode is feeding (536°F) with 2100 cycles to idle (1087°F) and back to feeding (536°F).*** ***Assume mode is idle (1087°F) with 40 cycle of trip to upset (1112°F), and return to idle (1087°F).*** ***Assume mode is idle (1087°F) with40 cycle to off (41°F) and back to idle (1087°F).***
Opening for Nozzle (N1) on the Top Head Cover Plate 2	***41 / 70 / 1087 / 1112*** 2	***Assume normal mode is feeding (70), with 40 cycles to upset (1112) and back to idle (70). [Unplanned activations]*** 2 ***Assume mode is idle (70) with 2100 cycle of trip to melter idle (1087), and return to idle (70). [Weekly surveillance tests]*** ***Assume mode is idle (70) with 40 cycle to off (41) and back to idle (70).***
Cooling Supply / Returns	***41 in, 68 out***	***Nominally, temperature is 41 in, 68 out. Assume annual cooling outage, in=out=ambient=70 (40 cycles). Assume annual cooling supply failure/isolation during operation, in=out=212 (40 cycles).*** 2
Internal Bed	***41 / 122*** 2	***Assume 240 cycles from running (122), to off (41), then resume (122).*** 2

Notes

- ***Cycle Increase: The Seller must increase the numbers of operational cycles given above by 10% to account for commissioning duty unless otherwise noted.***
- ***The seller shall consider the conditions of nozzles N1 and N2 happening coincidentally.***
- ***The cyclical maximum temperature was reduced from 1250°F to 1112°F. Fluid specific gravity was changed from 1.1 to 1.01. The changes do not reduce margin.***

2

Approval

Rev	Description	System Engr	Vessel Engr	Checked	Approved	Date
0	Issue for Purchase	Mark Studd	David Ho	Walter Drosjack	Will Eaton	7/31/02
1	Revise for Purchase, delete vessel LOP-SBS-00003, incorporate SDDR-WTP-SDDR-PROC-03-0019	Reed Figley	Mohan Arulampalam	Dennis Rickettson	Loyd Donovan	10/13/03
2	Revised to Current Requirements. Incorporate DCNs 24590-WTP-M6N-M80T-00005 and 24590-LAW-M6N-M80T-00008	Erik Kalarchik	Mohan Arulampalam	Lance Lewis	~~Stuart Kretzschmar~~ P. RAJAGOPALAN	7/20/15

References for Data Sheet 24590-LAW-MKD-LOP-00008, Rev. 2			
Data	Reference Document	Revision	Title
Quality Level	24590-LAW-M6-LOP-00001001 24590-LAW-M6-LOP-00002001	0 0	P&ID - LAW LAW PRIMARY OFFGAS PROCESS SYSTEM MELTER 1 LOP-SCB-00001 P&ID - LAW LAW PRIMARY OFFGAS PROCESS SYSTEM MELTER 2 LOP-SCB-00002
Seismic category	24590-LAW-M6-LOP-00001001 24590-LAW-M6-LOP-00002001	0 0	P&ID - LAW LAW PRIMARY OFFGAS PROCESS SYSTEM MELTER 1 LOP-SCB-00001 P&ID - LAW LAW PRIMARY OFFGAS PROCESS SYSTEM MELTER 2 LOP-SCB-00002
Design Specific Gravity	24590-LAW-MVC-LOP-00001	0	PROCESS DATA INPUT FOR LAW SBS CONDENSATE VESSELS AND PUMPS (LOP-VSL-00001/2 AND LOP-PMP-00001/2/4/5) AND SBS WATER PURGE PUMPS (LOP-PMP-00003A/B AND LOP-PMP-00006A/B)
Maximum Operating Volume	24590-LAW-MKC-LOP-00001	0	PROCESS SIZING OF THE LAW SUBMERGED BED SCRUBBER
Total Volume	24590-LAW-MKC-LOP-00001	0	PROCESS SIZING OF THE LAW SUBMERGED BED SCRUBBER
Inside Diameter	24590-LAW-MKC-LOP-00001	0	PROCESS SIZING OF THE LAW SUBMERGED BED SCRUBBER
Length/Height (TL-TL)	24590-LAW-MK-LOP-00001001 24590-LAW-MK-LOP-00001002	0 0	EQUIPMENT ASSEMBLY LAW SUBMERGED BED SCRUBBER LOP-SCB-00001, 2 & 3 (Q) SHEET 1 OF 3 EQUIPMENT ASSEMBLY LAW SUBMERGED BED SCRUBBER LOP-SCB-00001, 2 & 3 (Q) SHEET 2 OF 3
Internal Pressure	24590-LAW-MEC-LOP-00006	1	DESIGN PRESSURE AND DESIGN TEMPERATURE CALCULATION FOR LOP SYSTEM
External Pressure	24590-WTP-MVC-S0-00009	0	LAW, BOF, AND LAB VESSEL CYCLIC DATASHEET INPUTS
Temperature	24590-LAW-MEC-LOP-00006	1	DESIGN PRESSURE AND DESIGN TEMPERATURE CALCULATION FOR LOP SYSTEM
Min. Design Metal Temp.	24590-BOF-M6C-CHW-00002	0	BOF CHW PRESSURE AND TEMPERATURE CONDITIONS
Weight	24590-QL-POA-MKAS-00001-01-16	00C	CALCULATION - SUBMERGED BED SCRUBBER FLUE OR OFF-GAS LAW, WEIGHT / SEISMIC / NOZZLE LOAD / LIFTING CALCULATIONS
Beta/game dose exposure	24590-WTP-Z0C-W13T-00010	F	CONTACT DOSE RATES TO EQUIPMENT FROM BETA AND GAMMA EMMITERS
Corrosion Allowance	24590-LAW-N1D-LOP-00001	3	LOP-SCB-00001 AND LOP-SCB-00002 -LAW- - MELTER 1 AND MELTER 2 SUBMERGED BED SCRUBBERS (SBS)
Materials of Construction	24590-LAW-N1D-LOP-00001	3	LOP-SCB-00001 AND LOP-SCB-00002 -LAW- - MELTER 1 AND MELTER 2 SUBMERGED BED SCRUBBERS (SBS)
Equipment Cyclic Information	24590-WTP-MVC-S0-00009	0	LAW, BOF, AND LAB VESSEL CYCLIC DATASHEET INPUTS

24590-LAW-MT-LVP-00005001

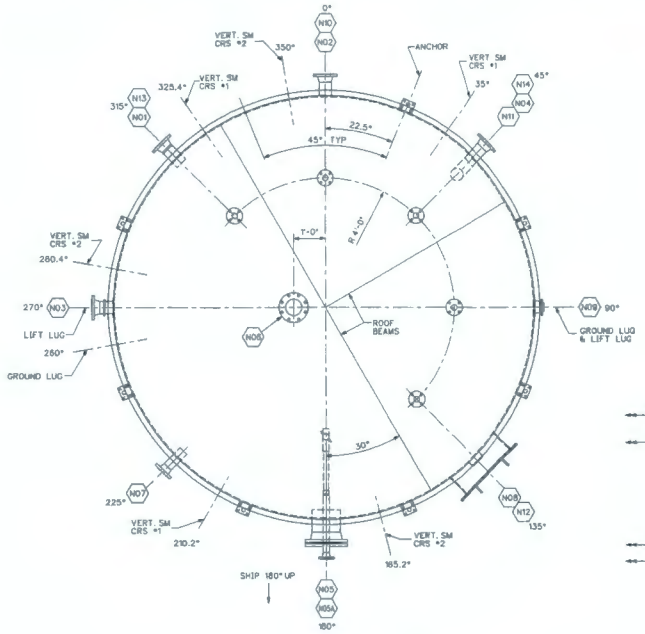

PLAN VIEW

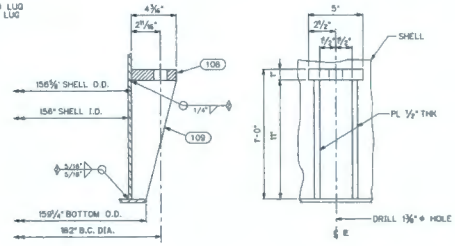

ANCHORAGE DETAILS

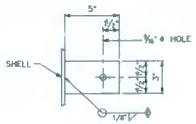

GROUNDING LUG "110"
(2 REQUIRED)

NAME PLATE W/ 2" U-BRACKET
(LOCATED DIRECTLY ABOVE MANWAY)

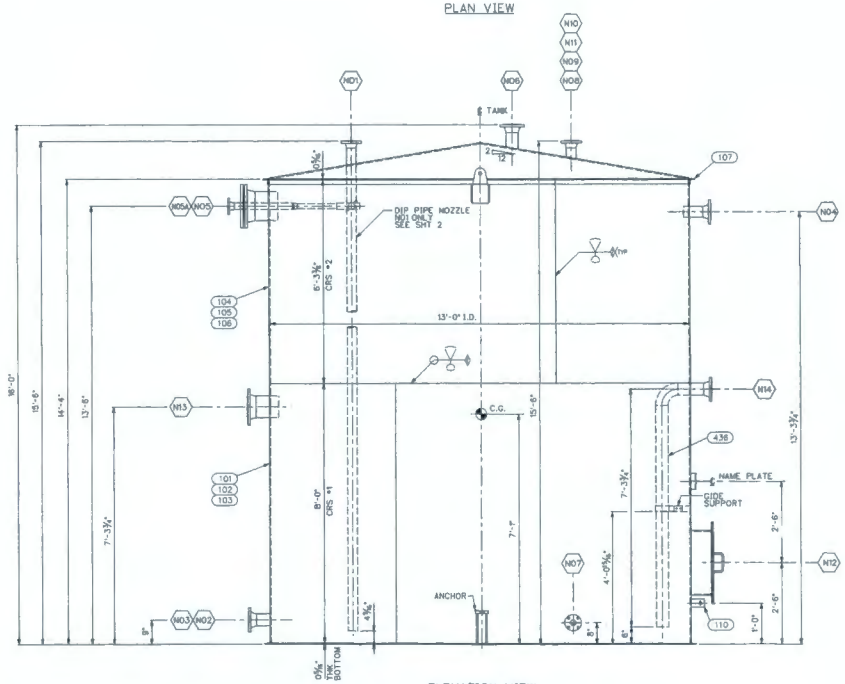

ELEVATION VIEW
ALL ELEVATIONS TAKEN FROM BOTTOM OF BOTTOM PLATE
(FOR TRUE ORIENTATION SEE PLAN VIEW)

NOZZLE LEGEND

NOZZLE MK	QTY	SIZE	FLANGE RTG	FLANGE FACE	FLANGE TYPE	NECK SCH/THK	REINF.PL THK	REINF.PL O.D.	SERVICE
N01	1	3"	150#	R.F.	W.N.	80s	–	–	SPARE WITH BLIND
N02	1	3"	150#	R.F.	W.N.	80s	5/16"	8 1/2"	OUTLET
N03	1	4"	150#	R.F.	W.N.	80s	5/16"	12"	OUTLET
N04	1	4"	150#	R.F.	W.N.	80s	5/16"	12"	SPARE WITH BLIND
N05	1	10"	150#	R.F.	W.N.	40s	5/16"	23"	SPRAY NOZZLE (REMOVABLE)
N05A	1	2"	150#	R.F.	W.N.	80s	–	–	INLET SPRAY NOZZLE
N06	1	4"	150#	R.F.	W.N.	80s	–	–	VENT
N07	1	3"	150#	R.F.	W.N.	80s	5/16"	8 1/2"	LEVEL INSTRUMENT
N08	1	3"	150#	R.F.	W.N.	80s	–	–	RECIRCULATION INLET
N09	1	2"	150#	R.F.	W.N.	80s	–	–	PROCESS WATER INLET
N10	1	2"	150#	R.F.	W.N.	80s	–	–	SPARE WITH BLIND
N11	1	2"	150#	R.F.	W.N.	80s	–	–	SPARE WITH BLIND
N12	1	24"	3/8"	F.F.	PL	5/16"	5/16"	18 1/2"	SHELL MANWAY
N13	1	8"	150#	R.F.	W.N.	80s	5/16"	18 1/2"	INLET "SCRUBBER DRAIN"
N14	1	6"	150#	R.F.	W.N.	80s	5/16"	18 1/2"	OVERFLOW

SHIP No PC	PC MK	SHOP No PC	DESCRIPTION	MAT'L	REMARKS	WEIGHT (POUNDS)
1			LAW CAUSTIC COLLECTION TANK LVP-TK-00001			12646
	101	1	5/16" PL @ 96" x 239"G	SA240-T316*	ROLL @ 156" I.D	2125
	102	1	5/16" PL @ 96" x 95"G	SA240-T316*	ROLL @ 156" I.D	844
	103	1	5/16" PL @ 96" x 157.07"G	SA240-T316*	ROLL @ 156" I.D	1396
	104	1	5/16" PL @ 75 3/8" x 239"G	SA240-T316*	ROLL @ 156" I.D	1668
	105	1	5/16" PL @ 75 3/8" x 95"G	SA240-T316*	ROLL @ 156" I.D	663
	106	1	5/16" PL @ 75 3/8" x 157.07"G	SA240-T316*	ROLL @ 156" I.D	1096
	107	1	ϕ 2" x 2" x 1/4" @ 41'-6 3/8"	T316*	ROLL 1/8 @ 156 3/8" I.D	138
	108	8	1" PL @ 4 3/16" x 5"	SA240-T316*		50
	109	16	1/2" PL @ 1 5/16" / 4 3/16" x 11"	SA240-T316*		72
	110	2	1/4" PL @ 3" x 5"	SA240-T316*		2
	111	1	10 GA. PL @ 2" x 5"	S/S		–
	112	1	10 GA. PL @ 2 1/2" x 9 1/4"	SA240-T316*		1
					TOTAL THIS SHEET	8055

* MAX. CARBON CONTENT OF 0.030%

GENERAL NOTES

1. EMPTY WEIGHT OF LVP-TK-00001 IS 12,646 LBS. OPERATING WEIGHT (FULL TO TOP OF ROOF ANGLE) IS 147,795 LBS. AND TEST WEIGHT (FULL TO TOP OF ROOF ANGLE) IS 151,198 LBS.
2. MATERIALS:
   A). PIPE - SA-312-T316 (MAX CARBON CONTENTS IF 0.030%)
   B). FLANGE - SA-182-F316 (MAX CARBON CONTENTS OF 0.030%)
3. NOZZLE PROJECTION AND REINFORCEMENT SHALL BE PER API-650.
4. CONSTRUCTION FABRICATES AND INSTALLS AS SHOWN.
5. CONTENTS OF THIS DOCUMENT ARE DANGEROUS WASTE PERMIT AFFECTING.
6. NUMBERS IN WELD SYMBOL TAILS DENOTE VENDOR WPS DEFINED IN 24590-CM-POA-MVA0-00019-03-00015, NOTE 19.
7. THIS DRAWING SUPERSEDES 24590-CM-POA-MVA0-00019-03-00003 REV 000. THIS DRAWING INCLUDES INFORMATION FROM 24590-WTP-FC-M-15-0149 AND 24590-WTP-CCN-CS-08-0137. MODIFIED NOZZLES 13 AND 14 REINFORCING PLATES TO CONFORM TO API 650/653 STANDARDS.

Please note that source, special nuclear, and byproduct materials, as defined in the Atomic Energy Act of 1954 (AEA) are regulated at the U. S. Department of Energy (DOE) facilities exclusively by DOE acting pursuant to its AEA authority. DOE asserts that pursuant to AEA, it has sole and exclusive responsibility and authority to regulate source, special nuclear, and byproduct materials at DOE-owned nuclear facilities. Information contained herein on radionuclides is provided for process description purposes only.

CHANGE DOCUMENTS INCORPORATED BY REFERENCE
NONE

DRAWING INDEX

DWG NO	TITLE
24590-LAW-MT-LVP-00005001	LAW CAUSTIC COLLECTION TANK LVP-TK-00001 GEN ARRANGEMENT
24590-LAW-MT-LVP-00005002	LAW CAUSTIC COLLECTION TANK LVP-TK-00001 NOZZLE DETAILS
24590-LAW-MT-LVP-00005003	LAW CAUSTIC COLLECTION TANK LVP-TK-00001 NOZZLE DETAILS

REVISION HISTORY

REV	DESCRIPTION	ORG	CHKD	RVWD	APVD	DATE
0	ISSUED FOR CONSTRUCTION, SEE NOTE 7	CS				

CM

ISSUED BY BPHC/PSF/SGC BASIC STAMP

PROJECT No.	24590	
SITE	HANFORD	
AREA	200E	
BUILDING No.	27	
ORIGINATOR		
CHECKER		
APPROVER		
REVIEWER		

CONTENT APPLICABLE TO ALARA? ☒ YES ☐ NO
ADR No. 24590-WTP-ADR-M-03-008 REV: 2

RIVER PROTECTION PROJECT
WASTE TREATMENT PLANT
2435 STEVENS CENTER PLACE
RICHLAND, WA 99354

CONTRACT No: DE-AC27-01RV14136

LAW CAUSTIC COLLECTION TANK LVP-TK-00001 GENERAL ARRANGEMENT

SCALE: NTS

24590-LAW-MT-LVP-00005001 REV 0

℄ SIZE - 44x34
COMPUTER GENERATED - MANUAL DESIGN CHANGES NOT PERMITTED

FORM E_SDN.BGN 03/2006

6/30/2010 2:19:58 PM

Issued by
RPP-WTP PDC

RIVER PROTECTION PROJECT – WASTE TREATMENT PLANT

ENGINEERING SPECIFICATION

FOR

LAW Thermal Catalytic Oxidizer/Reducer

Content applicable to ALARA?	☒ Yes ☐ No	**Quality Level**
ADR No. 24590-LAW-ADR-M-02-023	**Rev** 4	Q
Specification changes retroactive?	☐ Yes ☒ No ☐ N/A (alpha revision or revision 0)	DOE Contract No. DE-AC27-01RV14136

NOTE: Contents of this document are Dangerous Waste Permit affecting.

REV	DATE	BY	CHECK	AUTHORIZATION	APPROVER
6	7/14/16	Originator By: Dennis J Rickettson - djrickel Org Name: Mechanical Systems Placed: Jun 29, 2016 D Rickettson	Originator By: Brandon James Landrum - bjlandru Org Name: LAW MHRE Placed: Jul 05, 2016 B Landrum	N/A	P Rajagopalan J Leam
5	10/30/15	D Rickettson	L Lewis	N/A	G Goolsby
4	05/15/15	D Rickettson	J Marsh	N/A	P Rajagopalan
3	10/21/14	D Rickettson	G Goolsby	N/A	S Kretzschmar
2	07/01/13	J Marsh	D Rickettson	N/A	O Omel
1	04/26/10	D Nelson	N Whitcomb	N/A	J Roth
0	03/01/10	D Nelson	N Whitcomb	N/A	J Roth

SPECIFICATION No.	**Rev**
24590-LAW-3PS-MBTV-T0001	6

Revision History

Revision	Reason for Revision	Q Specification Revision Only Margin Reduced?		CM Only
		YES	NO	N/A
0	Issued for purchase	N/A	N/A	N/A
1	This revision removes the full complement of NQA-1 requirements and substitutes a Quality Requirements Specification customized specifically for the LAW TCO procurement. This revision also reflects the removal of IEEE-323 environmental qualification requirements for LAW SS equipment. No revision bars were used for this revision. Issued for purchase.	☐	☒	☐
2	Incorporates TCN's 24590-QL-MRA-MBT0-00007-T0002, 4, 6, 7, 8, and 9. Incorporates SDDR's 24590-WTP-SDDR-MS-11-00054, 11-00200, 11-00298, 11-00299, 12-00094, 12-00110, 12-00167, 12-00168, 12-00173, 13-00001, 13-00006, 13-00015, 13-00023. On 04/10/13 the Supplier for the LAW TCO went out of business. The following specification sections were revised to address finishing the LAW TCO by the Completion Supplier. •Add section 1.2.15, defined work scope for the Completion Supplier •Add section 1.3.12, defined work scope for WTP. WTP will be responsible for seismic, thermal, ASME B 31.3 and ASME VIII calculations. •Revised the specification throughout changing "Supplier" to "Completion Supplier" where appropriate. • Revised the specification throughout deleting submittal requirements for seismic, thermal, ASME B 31.3 and ASME VIII analysis. •Add section 4.5, Defined Government Furnished Material (GFE) requirements for the Completion Supplier. •Rewrite section 5.1.4, defined ammonia gas pipe line connection requirements for the Completion Supplier. •Rewrite section 6.1.4, revised testing of rectangular flanges for Completion Supplier. •Delete section 10.2.7.1, contents on this section moved to new section 4.5. •editorial revision to Attachment JQ07, section 3.4.5.2.1, added ASTM A276, 316L, as required by TCN8 •Attachment JQ07 - Deleted the safety software requirements, added the cable separation requirements. •Added attachment 13 LAW design Status 06/26/13, for the Completion Supplier.	☐	☒	☐
3	Incorporated TCN's 24590-QL-MRA-MBT0-00007-T0010, and 11. Incorporated SDDR's 24590-WTP-SDDR-MS-13-00074, 14-00002, 14-00003, 14-00004, 14-00042, 14-00048, 14-00049, 14-00050, 14-00061, 14-00062 and 14-00064. Incorporated technical notes from MR, 24590-QL-MRA-MBT0-00007. The Completion Supplier and WTP were unable to qualify the majority of the partially fabricated TCO and ammonia air dilution skid for reuse. The options that allowed the Completion Supplier to refurbish the partially fabricated TCO and ammonia air dilution were removed. This	☐	☒	☐

		Q Specification Revision Only Margin Reduced?		CM Only
	general specification revision aligns the specification with the current fabrication plan. Aligning the specification with the current fabrication plan and incorporating previously approved changes (TCNs, SDDR & technical notes) does not reduce margin. Justification for margin statement. Margin was evaluated on the previously reviewed and approved changes. Fabrication options do not include margin, so deletion of fabrication options do not impact margin. Fabrication plans do not include margin, so margin is not impacted. Revision bars were not used for this general specification revision.			
4	Incorporated SDDR's 24590-WTP-SDDR-MS-14-00066, 14-00068, 14-00069, 14-00074, 14-00076, 14-00091, 15-00010, 15-00012, 15-00017, 15-00018, 15-00021, 15-00022, 15-00023 and 15-00025. Incorporated EIEs, 24590-LAW-EIE-MS-14-0079 & 14-0088. Strike out and or Revision bars were used to denote changes.	☐	☒	☐
5	Section 2.2.3, ASME B&PVC, section VIII-2004 was changed to VIII-2013. In section 2.3.11 the HEPA filter specification was deleted. Section 2.3.13, specification 24590-WTP-3PS-MV00-T0002 was added by ESQ group. Revised expansion joint requirements in sections 3.1.10, 3.1.11, 3.1.12 and 3.1.13. In Section 3.1.14 the verbiage relating to active safety functions was removed by the systems engineer. This work scope does not include components with an active safety function. Section 3.3, the word "mixing" was deleted. In section 3.4.7, the mass balance calculation is defined as "non-safety". Sections 3.4.9, 3.4.10 and 3.4.11 were deleted to align with the current work scope. Section 3.5 was revised to relocate the ammonia dilution skid to room L-0322A. Section 3.7.3.1 was revised to align with the current design shown on the P&ID. Section 3.7.3.3 the words "HEPA filter and" were deleted. Section 3.7.3.4 was deleted, HEPA filters are no longer in the work scope. Section 3.10.3 was revised to define the control narrative as non-safety and that the buyer will provide the control logic. In section 3.10.4 valves LVP-V-01548, LVP-V-01612, LVP-V-01618 and LVP-V-01620 were removed because they no longer have Hy-lok ends. Section 3.16.4.14 was revised to align with SDDR 15-00040. Section 3.16.4.15 was revised to align with SDDR 15-00041. Section 3.4.14.17 Deleted. Section 3.16.4 revised to align with current CGD plans. Sections 3.16.4.4, 3.16.4.5, 3.16.4.8, 3.16.4.12, 3.16.4.13 and 3.16.4.21, yellow metal inspection deleted by CGD group. Section 3.17.2 added bellows, LVP-BLWS-00080 and 00081. Section 3.17.13 deleted non Q items; solenoid valves, coalescing filters, rotometers and hose. Added sections 4.2.6 and 5.3.4. In section 6.1.3 the words "HEPA Filters for the HEPA housing may or may not be installed for testing" were deleted. In section 7.2.3 the word "filters" was deleted. Section 10.1 revised to define submittal requirements. Sections 10.2.5 and 10.2.7.2 revised to clarify requirements for C of Cs and MTRs. Deleted the sentence containing "Two times max system pressure" from attachment JQ07, section 3.8.3. Deleted "MS Access format" from attachment JQ07, section 11.2.2. The following SDDRs were incorporated by reference: 24590-WTP-SDDR-MS-15-00019, 15-00028, 15-00029, 15-00030, 15-00031, 15-00040, 15-00041, 15-00051, 15-00052, 15-00056, 15-00057 and 15-00060.	☐	☒	☐

		Q Specification Revision Only Margin Reduced?		CM Only
	Margin was evaluated on the previously reviewed and approved SDDRs. Changes to the specification paragraphs provide clarification to the completion supplier, margin is not impacted.			
6	Section 1.3.13, add FE/FT 0529 and FE/FT 0539. Section 3.7.3.1, delete FE- 0529 and FE-0539. Section 3.16.4.10, this section deleted. Section 3.17.13, deleted "flow meters". The following SDDRs were incorporated by reference: 24590-WTP-SDDR-MS-15-00063 24590-WTP-SDDR-MS-15-00072 24590-WTP-SDDR-MS-15-00073 24590-WTP-SDDR-MS-16-00001 24590-WTP-SDDR-MS-16-00004 24590-WTP-SDDR-MS-16-00009 24590-WTP-SDDR-MS-16-00014 24590-WTP-SDDR-MS-16-00015 Work scope to provide FE/FT 0529 and FE/FT 0539 has changed from the completion supplier to C&I. The design of FE/FT 0529 and FE/FT 0539 has not changed; therefore, margin is not impacted. Margin was evaluated on previously reviewed and approved SDDRs.	☐	☒	☐

Notice

Please note that source, special nuclear, and byproduct materials, as defined in the Atomic Energy Act of 1954 (AEA), are regulated at the US Department of Energy (DOE) facilities exclusively by DOE acting pursuant to its AEA authority. DOE asserts, that pursuant to the AEA, it has sole and exclusive responsibility and authority to regulate source, special nuclear, and byproduct materials at DOE-owned nuclear facilities. Information contained herein on radionuclides is provided for process description purposes only.

Contents

Notice....1

1 Scope....5

1.1 Project Description and Location....5

1.2 Equipment, Material, and Services Required....5

1.3 Work by Others....6

1.4 Acronyms and Abbreviations....6

1.5 Definitions....8

1.6 Safety/Quality Classifications....9

2 Applicable Documents....9

2.1 General....9

2.2 Industry Standards....9

2.3 Reference Documents/Drawings....10

3 Design Requirements....11

3.1 General....11

3.2 Offgas Treatment Functional Description of Major Components....14

3.3 Basic Function....14

3.4 Performance....15

3.5 Design Conditions....15

3.6 Environmental Conditions....16

3.7 Mechanical Requirements....16

3.8 Loading....19

3.9 Electrical Requirements....19

3.10 Instrumentation and Control Requirements....20

3.11 Lifting Requirements....21

3.12 Thermal Analysis Requirements....21

3.13 Deleted....22

3.14 Accessibility and Maintenance....22

3.15 Software Requirements....22

3.16 Testing and Inspection Requirements....23

3.17 Engineering requirements for commercial components purchased from a sub supplier or commercial items provided by WTP for reuse....40

4 Materials....44

4.1 General....44

4.2 Construction....44

4.3 Prohibited Materials....45

4.4 Insulation 45
4.5 Government Material 46
5 Fabrication 46
5.1 General 46
5.2 Welding 47
5.3 Coating 47
5.4 Assembly 47
6 Tests and Inspections 47
6.1 General 47
6.2 Personnel Qualifications 49
6.3 Non-Destructive Examinations 49
6.4 Shop Tests 49
6.5 Site Tests 53
7 Preparation for Shipment 53
7.1 General 53
7.2 Tagging 53
7.3 Nameplates 54
7.4 Indoor storage 54
8 Quality Assurance 54
8.1 General Requirements 54
8.2 Quality Program Requirements 55
8.3 Supplier Deviation 55
9 Configuration Management 55
10 Documentation and Submittals 55
10.1 General 55
10.2 Submittals 55
11 References 58

Attachments

Attachment JQ07 - *Instrumentation for Packaged Systems*
Attachment EKP0 - *Electrical Requirements for Packaged Systems*
Attachment NN00 - *Thermal Insulation for Mechanical Systems*
Attachment PS02 - *Shop Fabrication of Piping*
Attachment AFPS - *Shop Applied Special Protective Coatings for Steel Items and Equipment*
Attachment EEQ - *LAW TCO EEQ Guidance*

1. **24590-WTP-SRD-ESH-01-001-02, pages C.34-1 thru C.34-5, tailoring of ANSI-K61.1**
2. **24590-WTP-SRD-ESH-01-001-02, pages C.26-1 thru C.26-7, tailoring of ASME-B31.3**
3. **Deleted**
4. **LAW Skid Interface Connections**
5. **Connection for Non-Routine Sample Extraction**
6. **Connection for Sample Extraction-Permanent Typical**
7. **Certificate of Analysis for BASF Catalysts, LLC (VOCat 300S)**
8. **LAW TCO & Ammonia/Air Dilution Skid Embed As-Built Elevations**
9. **Deleted**
10. **Deleted**
11. **Sample Certificate of Conformance**
12. **Deleted**
13. **Deleted**

1 Scope

1.1 Project Description and Location

The Hanford Tank Waste Treatment and Immobilization Plant (WTP) is a complex of waste treatment facilities where the Department of Energy's (DOE) Hanford site tank waste will be pretreated and immobilized into stable glass form via vitrification. The WTP Contractor will design, build, and start up the WTP pretreatment and vitrification facilities for the US Department of Energy's (DOE) Office of River Protection (ORP). The waste treatment facilities will pre-treat and immobilize the Low-Activity Waste (LAW) and High-Level Waste (HLW) currently stored in underground storage tanks at the Hanford Site.

The Hanford Site occupies an area of about 560 square miles and is located along the Columbia River, north of the city of Richland. The WTP Facility will be constructed at the East End of the 200 East Area of the Hanford Site. Benton, Franklin, and Grant counties surround the Hanford Site.

1.2 Equipment, Material, and Services Required

This specification provides the requirements for the design, materials selection, appurtenances selection, quality control, quality assurance, inspection, fabrication, testing and labeling of an LAW Thermal Catalytic Oxidizer/Reducer (TCO) and the associated Ammonia/Air Dilution Skid.

The scope of work for the Completion Supplier includes work specifically defined in this specification and its addenda and attachments. Work shall include, but is not limited to, the following:

1.2.1 Low-Activity Waste Off-Gas Equipment: To include a Thermal Catalytic Oxidizer/Reducer Skid, LVP-SKID-00002, Ammonia/Air Dilution Skid, LVP-SKID-00003, and Ammonia-Air Dilution fan control panel (LVP-PNL-00003).

1.2.2 Deleted

1.2.3 Provide Material Test Reports (MTRs), welding procedures, removable insulation installation procedures, surface preparation and coating procedures, testing procedures, testing results, inspection results, and all other procedures and documentation required per this specification and its addenda and attachments.

1.2.4 Provide transportation, storage, and installation instructions for the Thermal Catalytic Oxidizer/Reducer and the Ammonia/Air Dilution Skid per manufacturer's recommendation and this specification.

1.2.5 Provide packaging and prepare the Thermal Catalytic Oxidizer/Reducers Skid, the Ammonia/Air Dilution Skid, control panels, gaskets, special tools (if required), and catalyst bed for shipment to the WTP site. Packaging shall be sufficient to allow indoor storage for a period of up to 12 months at the WTP site, without Buyer action except routine inspection. Environmental conditions for storage are found in Section 7.4 of this specification.

1.2.6 Provide special tools required for installation and maintenance.

1.2.7 Provide Material Safety Data Sheets (MSDSs) for the catalyst cartridges and any other potentially hazardous chemicals or materials which will be delivered to the Buyer.

1.2.8 Deleted

1.2.9 Procure and install thermal insulation. Provide installation procedures for removable insulation.

1.2.10 Deleted

1.2.11 Provide shop painting of carbon steel surfaces.

1.2.12 Deleted

1.2.13 Provide junction boxes to accommodate wiring to remote-mounted Completion Supplier control panel. The Completion Supplier shall provide wiring schedule, diagrams, and documentation to facilitate installation of wiring from equipment to remote control panel.

1.2.14 Deleted

1.3 Work by Others

Specific activities and materials excluded from the scope of this specification include:

1.3.1 Shipping to WTP jobsite

1.3.2 Material unloading and storage at jobsite

1.3.3 Installation labor

1.3.4 Foundation embeds and Surface Mounted Plates

1.3.5 Ammonia vapor supply to skid connection

1.3.6 Electric power supply

1.3.7 Off skid external wiring

1.3.8 External connection to the Buyer's instrumentation and controls

1.3.9 Containment Tent, portable High Efficiency Particulate Air (HEPA) filter exhauster

1.3.10 Grounding cable

1.3.11 Z Instruments, TE-0509 with thermowell, TE-0516 with thermowell, FE-0530, FE-0531, FE-0540, FE-0541, YV-0528 and YV-0538

1.3.12 WTP will provide the Seismic, Thermal, ASME Section VIII, and the ASME B31.3 piping analyses for the Thermal Catalytic Oxidizer/ Reducer skid and the associated Ammonia / Air Dilution skid.

1.3.13 FE/FT-0529 and FE/FT-0539.

1.4 Acronyms and Abbreviations

ADS	Ammonia Dilution Skid
AHJ	Authority Having Jurisdiction
AI	Analog Input
AISC	American Institute of Steel Construction
AO	Analog Output
ANSI	American National Standards Institute
ASD	Adjustable Speed Drive
ASME	American Society of Mechanical Engineers
ASTM	American Society for Testing and Materials
AWG	American Wire Gauge
AWS	American Welding Society

C&I	Control & Instrumentation
CM	Commercial
MTR	Material Test Report
COA	Certificate of Analysis
COTS	Commercial-Off-The-Shelf
DBE	Design Basis Event
DCS	Distributed Control System
DD	Device Description
DO	Digital Output
DRE	Destruction and Removal Efficiency
EJMA	Expansion Joint Manufactures Association
FT	Functional Test
FF	Foundation® Fieldbus
FMEA	Failure Mode and Effects Analysis
FTF	Filter Test Facility
GFE	Government Furnished Equipment
HEPA	High Efficiency Particulate Air
HLW	High Level Waste
ICN	Integrated Control Network
IEC	International Electrotechnical Commission
IEEE	Institute of Electrical and Electronics Engineers
I/O	Input / Output
ISA	Instrument Service Air
LAW	Low Activity Waste
MACT	Maximum Achievable Control Technology
MDS	Mechanical Data Sheet
MR	Material Requisition
MSDS	Material Safety Data Sheet
MTBF	Mean-Time Between Failure
NACE	National Association of Corrosion Engineers
NDE	Non-Destructive Examination
NEC	National Electrical Code
NEMA	National Electrical Manufacturers Association
NFPA	National Fire Protection Association
NIST	National Institute of Standards and Technology
NMCF	Non-Modifiable Configurable Firmware
NOx	Oxides of Nitrogen
NRTL	Nationally Recognized Testing Laboratory
P&ID	Piping and Instrumentation Diagram
PCJ	Process Control System
PLC	Programmable Logic controller
PMI	Positive Material Identification
PPE	Personnel Protection Equipment
PPJ	Programmable Protection System
PQR	Procedure Qualification Record
PSA	Process Service Air
QAP	Quality Assurance Program
Q	Quality
QL	Quality Level
RFQ	Request for Quote
RPP	River Protection Project

RTD	Resistance Temperature Device
SBS	Submerged Bed Scrubber
SC	Seismic Category
SCO	Selective Catalytic Oxidation
SCR	Selective Catalytic Reduction
SDDR	Supplier Deviation Disposition Request
SIS	Safety Instrumented System
SS	Safety Significant
SSCs	Systems, Structures, and Components
SVOCs	Semi-Volatile Organic Compounds
TCO	Thermal Catalytic Oxidizer/Reducer
UL	Underwriters Laboratories, Inc.
VOCs	Volatile Organic Compounds
VSL	Vitreous State Laboratory
WAC	Washington Administrative Code
WESP	Wet Electro Static Precipitator
WPS	Welding Procedure Specification
WTP	Hanford Tank Waste Treatment and Immobilization Plant

1.5 Definitions

The equipment covered by this specification will be used in the WTP, where the following definitions are applicable:

Quality Level (QL): The quality level identifies the quality requirements to be applied to the equipment. The identified quality levels are Q (Quality), and CM (Commercial).

Seismic Category (SC): Specific requirements for each seismic category are defined in the reference document, Sections 2.3.21 of this specification.

Thermal Catalytic Oxidizer/Reducer Expert: One who has extensive knowledge regarding the characteristics and application of Thermal Catalytic Oxidizer/Reducer.

Cabinet: It is used interchangeably with the word "enclosure" within this specification.

Enclosure: A surrounding case constructed to provide a degree of protection to personnel against incidental contact with the enclosed equipment and to provide a degree of protection to the enclosed equipment against specific environmental conditions. An enclosure generally does not have any operational interface accessible from the exterior.

Panel: A type of enclosure that provides some kind of operational interface accessible from the exterior, without having to open the enclosure.

Rack: An open frame construction of angle, strut, channel, pipe, etc., designed to support the mounting of four or more instruments.

Non-Modifiable Configurable Firmware: The combination of commercial off the shelf hardware device, computer instructions, and data that resides as read-only software on that device. Non-Modifiable Configurable Firmware precludes modifications by the Buyer's staff, but can accept configuration parameters, via a set up process, to achieve specific functionality to meet the Buyer's requirements, provided features or capabilities such as advanced "scripting" or "coding" are not utilized. Non-modifiable configurable firmware can be adequately verified by testing the component of which it is an integral part.

1.6 Safety/Quality Classifications

1.6.1 Refer to the MDS in Section 2 of the MR for Safety Class, Quality Level, and Seismic Category classifications related to the LAW Thermal Catalytic Oxidizer/Reducer and the Ammonia/Air Dilution skid.

2 Applicable Documents

2.1 General

2.1.1 Work shall be done in accordance with the referenced codes, standards, and documents listed below, which are an integral part of this specification.

2.1.2 When specific chapters, sections, parts, or paragraphs are listed following a code, industry standard, or reference document, only those chapters, sections, parts, or paragraphs of the document are applicable and shall be applied. For the codes and standards listed in Section 2, the specific revision or effective date identified shall be followed. If a date or revision is not identified, the latest issue, including addenda, at the time of quotation, shall apply.

2.2 Industry Standards

2.2.1 Deleted

2.2.2 ASME B31.3 – 1996, *Process Piping Code*, as tailored in Appendix C of 24590-WTP-SRD-ESH-01-001-02, *Safety Requirements Document Vol. II* (see Attachment 2)

2.2.3 ASME B & PVC, Section VIII-2013, Division 1: *Rules for Construction of Pressure Vessels*

2.2.4 ASME Y14.100, *Engineering Drawing Practices*

2.2.5 ASTM – E84-08, *Surface Burning Characteristics of Building Materials*

2.2.6 Deleted

2.2.7 AWS D1.6-1999, *Structural Welding Code, Stainless Steel*

2.2.8 NEMA 250-2003, *Enclosures for Electrical Equipment (1,000 Volts Maximum)*

2.2.9 NFPA 70 – 1999, *National Electrical Code*

2.2.10 NFPA 497-1997, *Recommended Practice for the Classification of Flammable Liquids, Gases, or Vapors and of Hazardous (Classified) Locations for Electrical Installations in Chemical Process Areas*

2.2.11 UL 467-2007, *Standard for Safety Grounding and Bonding Equipment*

2.2.12 UL 508-2007, *Standard for Safety Electric Industrial Control Equipment*

2.2.13 UL 508A-2007, *Standard for Industrial Control Panels*

2.2.14 ANSI K61.1 - 1999, *Safety Requirements for the Storage and Handling of Anhydrous Ammonia*, as tailored in Appendix C of 24590-WTP-SRD-ESH-01-001-02, *Safety Requirements Document Vol. II* (see Attachment 1)

2.2.15 ASME AG-1 1997 with ASME AG-1a-2000 Addenda, Code on Nuclear Air & Gas Treatment

2.2.16 Deleted

2.2.17 ASME PTC-10-1997, Performance Test Codes on Compressors and Exhausters

2.2.18 ABMA 9-1990, Load Ratings and Fatigue Life for Ball Bearings

2.2.19 ABMA 11-1990, Load Ratings and Fatigue Life for Roller Bearings

2.2.20 ISO 3744-1995, Acoustics - Determination of Sound Power Levels of Noise Sources Using Sound Pressure - Engineering Method in an Essentially Free Field over a Reflecting Plane

2.2.21 ISO 1940-1:2003, Mechanical Vibration - Balance Quality Requirements for Rotors In a Constant (Rigid) State-Part 1: Specification and Verification of Balance Tolerances

2.2.22 NEMA MG 1-1998, Motors and Generators

2.2.23 AMCA-210-1999, Laboratory Methods of Testing Fans for Aerodynamic Performance Rating

2.2.24 AWS D1.1-2000, *Structural Welding Code – Steel*

2.2.25 EJMA Ninth Edition with 2011 Addenda

2.2.26 29 CFR 1910, *Occupational Safety and Health Standards for General Industry*

2.2.27 1997 UBC, *Uniform Building Code*

2.2.28 ASME B16.10-2009, Face-to-Face and End-to-End Dimensions of Valves

2.3 Reference Documents/Drawings

2.3.1 24590-WTP-3PS-EVV1-T0001, *Engineering Specification for Low Voltage Adjustable Speed Drives*

2.3.2 Deleted

2.3.3 24590-WTP-3PS-G000-T0001, *Engineering Specification for Supplier Quality Assurance Program Requirements*

2.3.4 24590-WTP-3PS-G000-T0002, *Engineering Specification for Positive Material Identification (PMI) for Shop Fabrication*

2.3.5 24590-WTP-3PS-G000-T0003, *Engineering Specification for Packaging, Handling and Storage Requirements*

2.3.6 Deleted

2.3.7 Deleted

2.3.8 24590-WTP-3PS-JQ00-T0004, *Engineering Specification for Management of Supplier Software*

2.3.9 24590-WTP-3PS-JXXE-T0003, *Engineering Specification for Commercial C&I Enclosures, Panels, Cabinets, and Racks*

2.3.10 *Deleted*

2.3.11 *Deleted*

2.3.12 24590-WTP-3PS-MV00-T0001, *Engineering Specification for Pressure Vessel Design and Fabrication*

2.3.13 24590-WTP-3PS-MV00-T0002, *Engineering Specification for Seismic Qualification Criteria for Pressure Vessels*

2.3.14 24590-WTP-3PS-MVB2-T0001, *Engineering Specification for Welding of Pressure Vessel, Heat Exchangers and Boilers*

2.3.15 24590-WTP-3PS-NWP0-T0001, *Engineering Specification for General Welding and NDE Requirements for Supplier Fabricated Piping*

2.3.16 24590-WTP-3PS-SS00-T0001, *Engineering Specification for Welding of Structural Carbon Steel*

2.3.17 24590-WTP-3PS-SS00-T0002, *Engineering Specification for Welding of Structural Stainless Steel and Welding of Structural Carbon Steel to Structural Stainless Steel*

2.3.18 24590-101-TSA-W000-0009-195-00002, *Report - Small Scale Melter Testing for Allyl Alcohol Method Verification*

2.3.19 24590-WTP-LIST-CON-08-0001, *Restricted Materials List WTP Safety Assurance*

2.3.20 24590-LAW-M6-LVP-00005002, *P&ID - LAW Secondary Offgas / Vessel Vent Process System SCO / SCR Skid*

2.3.21 24590-LAW-MKD-LVP-00012, *24590-LAW-MX-LVP-SKID-00002 and 24590-LAW-MX-LVP-SKID-00003 - LAW Catalytic Oxidizer / Reducer*

2.3.22 24590-WTP-3PS-PB01-T0001, *Technical Supply Conditions for Pipe, Fittings, and Flanges*

2.3.23 Deleted

2.3.24 24590-LAW-M6-LVP-00005001, *P&ID - LAW Secondary Offgas / Vessel Vent Process System Ammonia Dilution Skid*

2.3.25 24590-WTP-3PS-MUMI-T0002, Low Voltage Induction Motors

3 Design Requirements

3.1 General

3.1.1 The Thermal Catalytic Oxidizer/Reducer and the associated Ammonia/Air Dilution unit is designed to selectively and primarily remove Volatile Organic Compounds (VOCs) and Oxides of Nitrogen (NO_X) from the offgas generated by the LAW melters.

3.1.2 The Thermal Catalytic Oxidizer/Reducer and the associated Ammonia/Air Dilution unit shall be designed per this specification, the applicable documents listed in Section 2 of this specification, and the MDSs in Section 2 of the MR.

3.1.3 The WTP facility is designed for a minimum service life of 40 years. Structural and pressure boundary components related to the Thermal Catalytic Oxidizer/Reducer and the associated Ammonia/Air Dilution units shall be engineered with a design life of 40 years. The Recuperative Heat Exchanger shall have a minimum service life of 15 years. Catalyst used in the Thermal Catalytic Oxidizer/Reducer shall have a minimum design life of one year. Other key mechanical components, such as the Electric Heaters, and fans shall have a minimum service life of five years with periodic maintenance.

3.1.4 Operation of the Thermal Catalytic Oxidizer/Reducer and the associated Ammonia/Air Dilution units shall be continuous for one year. Refer to MDSs in Section 2 of the MR for thermal cyclic conditions. All instruments in section 3.1.14 with a "Z" suffix have been removed from the Completion Supplier's scope.

3.1.5 Deleted

3.1.6 The maximum pressure drops across the Thermal Catalytic Oxidizer/Reducer shall be in accordance with the requirements of the MDSs.

3.1.7 The following requirements shall be met (responsibility of the Buyer):

- Pressure boundary shall be designed in accordance with the requirements of ASME B&PVC, Section VIII, Div. 1 and BUYER specification 24590-WTP-3PS-MV00-T0001, *Engineering Specification for Pressure Vessel Design and Fabrication. Code* stamp is not required
- Non-Destructive Examination (NDE) requirements for the pressure boundary shall be in accordance with the Buyer specification 24590-WTP-3PS-MV00-T0001, *Engineering Specification for Pressure Vessel Design and Fabrication.* See additional requirements for Design Level 2 (L-2) Vessels, Section 6.3
- Seismic analysis shall be per the Buyer's specification 24590-WTP-3PS-MV00-T0002, *Engineering Specification for Seismic Qualification Criteria for Pressure Vessels*
- The structure supporting the pressure boundary shall be designed per BUYER specification 24590-WTP-3PS-MV00-T0002, Section 7.2.2, *Engineering Specification for Seismic Qualification Criteria for Pressure Vessels*

3.1.8 Penetrations in the pressure boundary (i.e. access doors, sample ports, etc.) shall be designed and reinforced in accordance with the requirements of ASME B&PVC, Section VIII, Div. 1, and the Buyer's specification 24590-WTP-3PS-MV00-T0001, Engineering Specification for Pressure Vessel Design and Fabrication.

3.1.9 Deleted

3.1.10 Circular expansion joints

Component Number	Nominal size	Design Pressure	Design Temperature	Design cycles
LVP-BLWS-00053	18 inch diameter	+15 psig / full vacuum	500F	100
LVP-BLWS-00061	18 inch diameter	+15 psig / full vacuum	500F	100
LVP-BLWS-00080	8 inch diameter	+15 psig / full vacuum	150F	100
LVP-BLWS-00081	8 inch diameter	+15 psig / full vacuum	150F	100

3.1.11 Combined Movements for LVP-BLWS-00080 and 00081

Component Number	Axial Compression	Axial Extension	Lateral	Angular
LVP-BLWS-00080	1.0 inch	0.5 inch	2.0 inches	2.0 degrees
LVP-BLWS-00081	1.0 inch	0.5 inch	2.0 inches	2.0 degrees

3.1.12 Circular expansion joints / bellows shall be designed and manufactured in accordance with ASME B31.3 and the Expansion Joint Manufacturers Association (EJMA) standard. Square or rectangular joints not specifically addressed by the Boiler & Pressure Vessel Code, ASME Section VIII, Division 1, shall meet the requirements within the latest version of the Expansion Joint Manufactures Association (EJMA) Standard. The bellows design shall meet all the design conditions and design life of the equipment. Stainless steel expansion bellows shall not be annealed after forming.

3.1.13 The Completion Supplier shall supply expansion joints (LVP-BLWS-00053 and 00061) for both the offgas process inlet and outlet connections. Expansion joints shall be one ply.

Analysis Condition, Movements	(Combined)	Required or Not Required
Compression Design	1.000 inch	Required
Lateral Design	0.5000 inch	Required
Angular Design	2 degrees	Required
Torsion	0.3 degrees	Optional, not a contract requirement

3.1.14 The following are the Safety Significant functions of the LAW Thermal Catalytic Oxidizer/Reducer and the Ammonia/Air Dilution units. An instrument has a "Z" suffix if it serves an active safety function. All instruments with a "Z" suffix have been removed from the Completion Supplier's scope.

a) Confinement of Melter Offgas: TCO housing, piping, and appurtenances shall be designed to maintain melter offgas confinement during normal operation, and during and after a seismic category III DBE. Structural failure of internals shall not breach confinement boundary.

b) Confinement of Ammonia: The ammonia and air dilution supply piping, valves, and appurtenances shall maintain confinement of ammonia during normal operation, and during and after a seismic category III DBE.

3.2 Offgas Treatment Functional Description of Major Components

Offgas is generated from the vitrification of radioactive waste in Joule heated ceramic melters.

3.2.1 LAW Thermal Catalytic Oxidizer/Selective Catalytic Reduction Unit:

The feed to the LAW Thermal Catalytic Oxidizer/Reducer is primarily melter offgas that has been treated by a Submerged Bed Scrubber (SBS), Wet Electrostatic Precipitator (WESP), HEPA Filters, and an Activated Carbon Bed Adsorber.

3.3 Basic Function

The Thermal Catalytic Oxidizer/Reducer unit shall consist of four primary components; a recuperative heat exchanger, electric heaters, VOC selective catalytic oxidation (SCO) bed, and a NO_X selective catalytic reduction (SCR) bed.

3.3.1 Recuperative Heat Exchanger

The recuperative heat exchanger is primarily employed to recover heat from the SCR hot exhaust gas for the Thermal Catalytic Oxidation/Reducer unit. The heat exchanger shall cool down the hot SCR exhaust gas and heat the incoming offgas.

3.3.2 Electric Heaters

The electric heaters are downstream of the recuperative heat exchanger and are employed to heat the offgas feed to the final desired oxidation and reduction temperatures. After startup, the electric heaters shall function as a trim control to raise the offgas temperature to the required oxidizing temperature. Required oxidizing and reduction temperatures shall be per performance criteria specified in Section 3.4 of this specification.

3.3.3 VOC Selective Catalytic Oxidation Unit

The SCO unit, containing oxidation catalyst, is downstream of the Electric Heaters and will oxidize volatile and semi-volatile organic compounds creating water and carbon dioxide. The residence time and number of catalyst beds shall be as specified in Section 3.4 of this specification.

3.3.4 NO_X Selective Catalytic Reduction Unit

The SCR unit, containing reduction catalyst, is downstream of the SCO and shall use ammonia injection to reduce the NO_X to Nitrogen, Oxygen, and water through catalytic reaction with ammonia.

3.3.5 Ammonia/Air Dilution System

The Buyer will supply ammonia gas to the LAW Ammonia/Air Dilution System. The Completion Supplier shall specify dilution air flow rates and pressures if required for the Ammonia/Air Dilution skid. The Completion Supplier shall supply necessary equipment required to meet performance requirements.

3.4 Performance

3.4.1 Refer to the Thermal Catalytic Oxidizer/Reducer MDSs for design data and gas stream properties.

3.4.2 The organic Destruction and Removal Efficiency (DRE) performance shall be based on inlet loadings specified in the MDSs.

3.4.3 The Thermal Catalytic Oxidizer/Reducer shall meet the DRE for Volatile Organic Compounds (VOCs) and Semi-Volatile Organic Compounds (SVOCs) as required in the MDSs as well as residence time and minimum oxidizing temperatures specified.

3.4.4 The NOx SCR unit shall meet the reduction efficiency at less than the specified ammonia slip concentration required in the MDSs.

3.4.5 Detection limits used to verify the Thermal Catalytic Oxidizer/Reducer guaranteed performance shall be based on the Buyer information (MDS General Note 9).

3.4.6 Deleted

3.4.7 The Completion Supplier shall provide the ammonia slip point within the mass balance calculation (this calculation is defined as non-safety) (excess ammonia beyond that needed for the reaction) for SCR performance.

3.4.8 The ammonia slip exiting the LAW systems shall be specified by the supplier to meet the NOx reduction efficiencies specified in Section 3.4.4 of this specification.

3.4.9 Deleted

3.4.10 Deleted

3.4.11 Deleted

3.5 Design Conditions

3.5.1 Refer to the Thermal Catalytic Oxidizer/Reducer and the associated Ammonia/Air Dilution MDSs in Section 2 of the MR.

3.5.2 The embed plate design location and elevation for the TCO skid is shown on drawing 24590-LAW-DB-S13T-00135, drawing coordinate (E-6.5 for the TCO skid). The design elevation for the top of the embed plates is 48 feet - 0 inches, in plant elevation. The existing embed elevations vary slightly from plate to plate. Attachment 8 lists embed As-Built elevations.

3.5.3 Deleted

3.5.4 The Buyer's existing embed plates for the TCO skid are coated carbon steel plates, stock code: EBPNS02CD, shown on drawing 24590-BOF-DD-S13T-00001. When attachments are welded to the existing embed plates, the Buyer site welding procedures require inorganic zinc primer to be removed within 2- 4 inches of the weld area. Only carbon steel can be welded to the carbon steel embed plates where the inorganic zinc primer has been removed.

3.5.5 Thermal Catalytic Oxidizer / Reducer Skid, LVP-SKID-00002, will be field welded to carbon steel or stainless steel surface mounted plates provided by the Buyer. The Buyer supplied surface mounted plates will be bolted with through bolts and installed with sandwich plates through the facility floor.

Locate the inlet bellows flange, LVP-BLWS-00053, 12 feet - 6 inches above the base of the Thermal Catalytic Oxidizer / Reducer Skid, LVP-SKID-00002.

Locate the outlet bellows flange, LVP-BLWS-00061, 12 feet - 6 inches above the base of the Thermal Catalytic Oxidizer / Reducer Skid, LVP-SKID-00002.

The Ammonia / Air Dilution Skid, LVP-SKID-00003, will be field welded to carbon steel or stainless steel surface mounted plates provided by the Buyer. The surface mounted plates will be bolted to the facility floor or bolted to the existing embeds.

3.5.6 The 2 inch thick surface mounted plates shown on drawing 24590-LAW-DD-S13T-00306 have been installed in the LAW facility. Each plate is secured with (4) 1 1/2 inch diameter threaded rods. On the 48' elevation side of the surface mounted plate the threaded rods are secured with double nuts and washer. During the installation of these surface mounted plates the 1 3/4 inch core drilled holes had to be positioned to miss reinforcing bar. The installed centerline location of the threaded rods with double nuts and washer are shown on drawing, 24590-LAW-DD-S13T-00313. As detailed on this drawing the rods with doubled nuts and washer stick up 3 7/8 inches to 4 1/2 inches above the top of the plate.

3.6 Environmental Conditions

3.6.1 The Thermal Catalytic Oxidizer/Reducer Skid and Ammonia/Air Dilution Skid will be located indoors. Refer to MDSs for specific room environmental design conditions.

3.6.2 Deleted

3.6.3 Deleted

3.6.4 The Completion Supplier shall provide and document Environmental Qualification per the requirements in Attachment EEQ.

3.7 Mechanical Requirements

3.7.1 General

3.7.1.1 Due to access restrictions for installation, the Thermal Catalytic Oxidizer/Reducer unit shall be fabricated in such a manner that will allow delivery in sections that comply with the bounding dimensions specified in MDSs. Each section of the Thermal Catalytic Oxidizer/Reducer shall be skid mounted.

3.7.1.2 The catalyst bed shall be designed for manual removal and replacement. The catalyst bed shall be designed to meet service life requirements outlined in Section 3.1.3 of this specification. The weight of a catalyst module is expected to be 60 to 70 pounds. When weights exceed 50 pounds, lifting beams, catalyst removal tools, or rigs shall be designed and supplied by the Completion Supplier.

3.7.1.3 The Completion Supplier shall provide transitions for connection to the Buyer's piping and gas analyzer instrumentation. All flanges required for connection to the Buyer's piping and gas analyzers shall be raised face flanges and shall be welded to the pipe (no threaded connections allowed). See Attachment 4 (LAW Skid Interface Connections). See also Attachments 5 and 6 (Connection for Non-Routine Sample Extraction and Connection for Sample Extraction - Permanent Typical, respectively) for non-routine and permanent analyzer connection details.

3.7.1.4 Deleted

3.7.1.5 NOT USED

3.7.1.6 Deleted

3.7.1.7 NOT USED

3.7.1.8 A containment tent or series of containments tents will be erected by the Buyer to control the work area for catalyst removal and replacement after permanent installation of the TCO units. The Buyer will supply and set up a portable HEPA filtered exhauster for containment tent ventilation with discharge port monitoring. The TCO unit will be ventilated using the Buyer's permanently installed process fans. Prior to catalyst removal, the TCO unit air will be sampled using a pre-installed sample tap. The air sample will be used to determine the level of airborne radioactive material inside the TCO unit. After the air samples are taken and deemed acceptable, removal of the catalyst subassembly will proceed.

3.7.1.9 The Completion Supplier shall supply the following for the TCO unit:

One 1-inch air sample tap per TCO unit. Include one 1-inch full port ball valve. The accessible end of the 1-inch ball valve shall include a cap or blind flange. There shall be at least 3 inches of clearance, for tightening bolts, between the insulating jacketing and the underside of the flange.

3.7.1.10 Catalyst removal / installation:

The catalyst bed (s) shall be designed for manual removal and replacement without entering the TCO unit for contact maintenance.

3.7.1.11 To facilitate process troubleshooting and to obtain additional data during testing and operations, the Completion Supplier shall supply the following for each TCO unit:

One sample port between each of the VOC catalyst beds to be used to measure offgas concentrations during non-routine evolutions. Sample ports shall be located to minimize flow disturbance and not interfere with the manipulation of the catalyst access doors. The location shall consider optimum accessibility. However, it is acceptable to locate the sample ports on the top of the TCO. Include ball valve, blind flange, gaskets, and bolts for each sample port. See Attachment 5 (Connection for Non-Routine Sample Extraction) for temporary connection details.

3.7.2 Recuperative Heat Exchanger

3.7.2.1 Unless otherwise specified, the heat exchanger pressure boundary shall be designed in accordance with ASME B&PVC, Section VIII, Division 1.

3.7.2.2 Deleted

3.7.2.3 Body flanges that allow for total unit replacement

3.7.2.4 Deleted

3.7.2.5 Deleted

3.7.2.6 Bolted connection to skid support frame

3.7.2.7 Heat exchangers shall be designed for full differential pressure, with one side at the design pressure and the other side at atmospheric pressure.

3.7.3 Ammonia/Air Dilution Equipment

3.7.3.1 Design and fabrication of ammonia piping and valves shall be in accordance with ANSI K61.1 and ASME B31.3 (as tailored in Attachment 1 & 2, respectively), and Attachment PS02 *LAW TCO Customized PS02*.

The following items, located on the ammonia dilution skid, shall be labeled as "suitable for ammonia" by the manufacturer of the item or the Completion Supplier; V-01570, YV-0560, PCV-0527, V-01559, V-72325, PT 0564, AV-0523, V-01557, and V-01554.

3.7.3.2 Deleted

3.7.3.3 The Completion Supplier shall supply, test, and deliver HEPA housings for the LAW ammonia dilution system in accordance with MDSs.

3.7.3.4 Deleted

3.7.3.5 HEPA Filter housings shall be provided in accordance with the MDS listed in Section 2.1 of the Material Requisition. Supplier submittals shall be as follows:

1 Submit procedure for Pressure Decay Test, ASME AG-1 1997 with AG-1a-2000 addenda, Article III-4200 (prepared with guidance given in AG-1 mandatory Appendix TA-III). Perform test on HEPA housings. Test duration shall be 15 minutes.

2 Submit procedure for Structural Capability Test, ASME AG-1 1997 with AG-1a-2000 addenda, TA-3422, (prepared with guidance given in AG-1 mandatory Appendix TA-II). Perform test on HEPA housings.

3 Recommended spare parts for the HEPA housings.

4 Operation and maintenance manuals for the HEPA housings.

3.7.3.6 The Completion Supplier shall supply centrifugal fans for the LAW ammonia/air dilution system. If the Completion Supplier determines airflow cannot be adequately controlled using control valves and that adjustable speed drives (ASD) are required, then the ASDs shall be in accordance with 24590-WTP-3PS-EVV1-T0001, *Engineering Specification for Low Voltage Adjustable Speed Drives*. Centrifugal fan Data Sheets will not be supplied by the Buyer. The Completion Supplier shall create and submit Centrifugal Fan Data Sheets outlining performance requirements as specified by the Completion Supplier. Applicable design conditions and mechanical requirements shall be outlined on the Centrifugal Fan Data Sheets.

3.7.3.7 Fans shall be capable of performing at the conditions shown on the fan data sheets. Fan performance ratings shall be based on AMCA-210 standard air condition. Materials of construction used shall be compatible with the effluent being handled.

3.7.3.8 Fan/motor assemblies shall be complete with all components and accessories fully assembled, wired, and skid mounted requiring only connection to the Buyer's electrical power and control systems, and interconnecting piping. Fan/motor assemblies shall be self-supporting, capable of carrying the static loads of the fan components and the stress imposed during shipment, installation, and operation.

3.7.3.9 Fans shall be designed and constructed for low leakage. Fans shaft seal(s) shall be low leakage with an external air purge.

3.7.3.10 Bearing rating life shall be established in accordance with ABMA 9 or 11, as applicable.

3.7.3.11 The Completion Supplier shall fill in and submit the "Electrical Data Sheet Low Voltage Induction Motor" contained in specification 24590-WTP-3PS-MUMI-T0002, for Fans LVP-FAN-00001 and LVP-FAN-00002.

3.7.3.12 The Completion Supplier shall fill in and submit the "Electrical Data Sheet Adjustable Speed Drive" contained in specification, 24590-24590-WTP-3PS-EVV1-T0001, for Fans LVP-FAN-00001 and LVP-FAN-00002.

3.7.3.13 Fan sound pressure level shall not exceed 85 dB (A) at 3-feet. If sound power exceeds 85 dB (A) at 3-feet, the Completion Supplier shall obtain the Buyer permission to proceed in the form of an SDDR stating estimated sound power level.

3.7.3.14 To achieve duty / standby configuration for the Buyer, Ammonia Dilutions Fans LVP-FAN 00001 and LVP-FAN-00002 shall be powered on separate 480V power feeds.

3.7.3.15 Electric motors shall be in accordance with NEMA MG-1. Motors shall be totally enclosed fan cooled type, unless motors are small and otherwise environmentally protected. Motor drive combination shall be suitable for operation for the design conditions shown on the Completion Supplier's fan data sheets. Each motor shall have a controller or drive.

3.7.3.16 For the fan, the following shall be submitted for the Buyer's review and information:

3.7.3.16.1 The Completion Supplier's recommended accessibility and maintenance requirements.

3.7.3.16.2 Performance test reports.

3.7.3.16.3 Sound test reports.

3.7.3.16.4 Deleted

3.7.3.17 Deleted

3.8 Loading

3.8.1 The Thermal Catalytic Oxidizer/Reducer (LVP-SKID-00002) and the associated Ammonia/Air Dilution assembly shall be self-supporting, capable of carrying the static loads of components and the stress imposed during shipment, installation, and operation.

3.8.2 Deleted

3.8.3 The Buyer will provide a seismic analysis in accordance with their approved processes and procedures.

3.8.4 Deleted

3.8.5 The Thermal Catalytic Oxidizer/Reducer units shall be designed in accordance with the nozzle load requirements as specified in the MDSs in Section 2 of the MR.

3.9 Electrical Requirements

3.9.1 Electrical components and appurtenances furnished with the Thermal Catalytic Oxidizer/Reducer and the associated Ammonia/Air Dilution units shall conform to the requirements of Attachment EKP0. Electrical components shall also meet applicable sections of NFPA 70-1999 and requirements outlined in NFPA 497-1997.

3.9.2 NOT USED

3.9.3 The Buyer will supply only 480V 3-wire wye-grounded power circuits. These shall connect to terminals in NEMA 4X-enclosed disconnecting devices mounted on the equipment skids. Flexible conduit connections to the skid disconnecting devices shall be used. All fan and heater circuits, and power and control circuits, shall be distributed

electrical power from these power disconnecting devices. All branch circuits shall include applicable over-current protection devices. The Completion Supplier shall include in their equipment all motor and heater controllers, including their control circuits and devices. All motors shall be totally enclosed fan cooled type, unless otherwise environmentally protected. If the Completion Supplier's components are rated for a lower voltage, the Completion Supplier shall provide the components necessary to supply the lower voltage and circuit protection devices. All distribution circuits requiring disconnecting means for maintenance and isolation, including combination controllers, to prevent complete shutdown of the Buyer's power circuits, shall be provided by the Completion Supplier. Electric heaters shall be of the element type and mounted on removable flanged plates for ease of maintenance.

3.9.4 Electrical enclosures shall be NEMA 4X rated.

3.9.5 The Thermal Catalytic Oxidizer/Reducer control panel (LVP-PNL-00003) components shall be UL 508 listed and certified. Control panels as a whole shall be UL 508A labeled.

3.9.6 NOT USED

3.9.7 Provide bolted compression type 2/0 terminal lugs at diagonally opposite corners of the TCO skid and the ammonia dilution skid for connection by the Buyer to the area ground grid. The Buyer uses 2/0 AWG stranded copper for the area ground grid.

3.9.8 The Completion Supplier shall provide total electric load for the Thermal Catalytic Oxidizer/Reducer.

3.9.9 The Completion Supplier shall provide a functional description of the electrical operation of the skids as well as single line, schematic, wiring, layout, and interconnection diagrams. In addition, catalog cut sheets, recommended spare parts, and electrical loads as detailed in Attachment EKP0, Section 9. *Documentation and Submittals.*

3.10 Instrumentation and Control Requirements

3.10.1 Instrumentation and controls furnished with the Thermal Catalytic Oxidizer/Reducer and the associated Ammonia/Air Dilution units shall meet the instrumentation and control requirements as stated in Attachment JQ07. The Buyer shall provide the appropriate ABB control system components (i.e. I/O modules, power supplies) to the Completion Supplier for fabrication into the Completion Supplier's control panel (LVP-PNL-00003) as described in Section 3.4.2 of Attachment JQ07. The Completion Supplier shall provide non-ABB manufactured equipment (fiber optic converters, fiber optic patch cables and plates, terminals, circuit breaker, wiring, etc.) and panel fabrication.

3.10.2 The Completion Supplier shall design the control panel (LVP-PNL-00003) to utilize the ABB control system equipment and provide a panel arrangement drawing with Bill of Material identifying all parts to be provided by the Buyer. The Completion Supplier shall provide an I/O list on the panel arrangement drawing for all instruments. Reference Buyer's P&IDs in Section 2 of the MR for additional information regarding instrument locations and types.

3.10.3 The Completion Supplier shall provide a non-safety control narrative, logic drawings, termination drawings, and related items as specified in Attachment JQ07 for normal (PCJ). The Buyer shall provide programming for normal operation (PCJ) via software included with the Buyer supplied ABB components. The Buyer shall provide the control logic, controller, software, and attend and support the functional test of the equipment at the Completion Supplier's facility.

3.10.4 In-line instruments shall be wired to the skid edge. Wiring shall terminate in a junction box. On the LAW TCO the following valves shall end with a Hy-Lok tubing connection: LVP-V-01609, LVP-V-01610, LVP-V-01613, LVP-V-01614, LVP-V-01615 and LVP-V-01616.

On the LAW Ammonia dilution skid the instrument tubing shall run to a bulk head plate. Provide Hy-Lok tubing end connections at the WTP / Completion Supplier interface.

3.10.5 NOT USED

3.10.6 Management of the Completion Supplier software shall be governed by 24590-WTP-3PS-JQ00-T0004, *Engineering Specification for Management of Supplier Software*.

3.11 Lifting Requirements

3.11.1 Lifting lugs shall be installed on the Thermal Catalytic Oxidizer/Reducer and Ammonia/Air Dilution skid packages for lifting and handling. The Completion Supplier shall identify the weight and center of gravity of each package. All lifting points shall be designed in accordance with the requirements of the Buyer specification 24590-WTP-3PS-G000-T0003, *Engineering Specification for Packaging, Handling, and Storage Requirements*.

3.11.2 Lifting eyes or lugs shall be certified to be suitable for the safe, lifting and handling of the equipment without distortion or damage to the components.

3.11.3 Deleted

3.11.4 Lifting lugs must accept standard commercial lifting equipment. Chain blocks or braiding shall not be permitted.

3.11.5 The lifting lugs for the packages must be accessible from the top, without removal of components or covers.

3.11.6 The Buyer will provide calculations for the lift lug design.

3.12 Thermal Analysis Requirements

3.12.1 Deleted

3.12.2 Refer to MDS for thermal analysis technical information and heat loss requirements (i.e. thermal conductivity values, room temperatures, etc.).

3.12.3 The thermal analysis, by the Buyer, will include the effects of stresses resulting from potential variations in temperatures due to startup, normal operation, shutdowns, and thermal cycling of the Thermal Catalytic Oxidizer/Reducer. Analysis shall show that the Thermal Catalytic Oxidizer/Reducer is adequate for the design life specified in Section 3.1.2 of this specification. Analysis shall also establish design temperature of the TCOs.

3.12.4 The thermal analysis, by the Buyer, will include thermal expansion of the Thermal Catalytic Oxidizer/Reducer and resulting nozzle loadings in X, Y, and Z planes with deflections at normal operating conditions and design conditions.

3.12.5 The thermal analysis, by the Buyer, will determine the thickness and extent of insulation required on the sides, ends, top, and bottom of the Thermal Catalytic Oxidizer/Reducer to ensure that the insulation jacket temperature and all exterior uninsulated portions with potential for personnel exposure do not exceed 140 °F at maximum design temperature.

3.12.6 The thermal analysis, by the Buyer, will determine the thickness and extent of insulation required on the bottom of the Thermal Catalytic Oxidizer/Reducer so that the temperature of the concrete does not exceed 150 °F.

3.12.7 Deleted

3.12.8 Deleted

3.12.9 Deleted

3.13 Deleted

3.13.1 Deleted

3.13.2 Deleted

3.13.3 Deleted

3.13.4 Deleted

3.13.5 Deleted

3.14 Accessibility and Maintenance

3.14.1 The Buyer's layout allows for necessary access and space requirements to facilitate maintenance during normal plant operation or scheduled shutdown.

3.14.2 The Completion Supplier's recommended accessibility and maintenance requirements for each piece of equipment shall be included in the Completion Supplier's design and shown on the layout drawings. Layout drawings shall show scaled clearances as dotted areas around and in front of all electrical equipment, components, and control panels. These areas shall be as required in the National Electrical Code.

3.14.3 The Completion Supplier shall provide instructions and frequency of maintenance including lubrication, rotation, heating, and any other type of preventative maintenance that will preserve the equipment until the time it is put into operation, including:

- Up to 12 months' indoor storage prior to installation
- Deleted
- Indoor (installed) but not operating preservation maintenance and inspection schedule
- Operating preservation maintenance and inspection schedule

Frequency of inspection and maintenance intervals during operation shall be in accordance with equipment the Completion Supplier's recommendations.

3.14.4 Deleted

3.14.5 Deleted

3.14.6 Deleted

3.14.7 Deleted

3.15 Software Requirements

See Section 3.5 in Attachment JQ07 for specific software requirements.

3.16 Testing and Inspection Requirements

3.16.1 The Completion Supplier shall submit un-priced Purchase Orders with attachments showing flow down of requirements to engineering under document category 33.0, on the G-321-E form. The Completion Supplier is only required to submit the un-priced POs that contain items that will be used in an application that has been designated as "Q" by the Buyer.

3.16.2 The Completion Supplier shall provide fabrication drawings with a Bill of Material. The Bill of Material shall include the WTP Quality Level (Q or CM). The Buyer will determine the WTP Quality level during the drawing review process.

3.16.3 Deleted

3.16.4 Testing and Inspection Requirements for LAW TCO & Ammonia / Air Dilution Skid Components

Testing and inspection requirements are derived from the related CGD plan as developed by the Procurement Engineering Group. For completeness of project records the Completion Supplier shall submit the Inspection, examination and test results to the Buyer via the G-321-E Document Category 33.0.

3.16.4.1 General Requirements for Components Listed in this Section

I. Testing and inspection activities listed herein are derived from the BNI Commercial Grade Dedication plans. In some instances, the tests may be equivalent to tests required in other sections of this specification. If this is the case, a duplication of the test or inspection is not necessary as long as the test or inspection fulfills both requirements. All other tests and inspections listed in this section are strictly for the verification of critical characteristics.

II. Inspect all supplier documentation for compliance with the purchase order requirements and verify that all components in a single line item of the PO have been manufactured and supplied from the same heat/lot of the base material, to the greatest extent possible. If there are different heat/lots for a single line item, it may have an impact on the sampling to be performed for testing and inspections. (see VIII below)

III. PMI (OES or XRF), hardness, proof load and/or tensile testing shall be performed by a laboratory that is accredited by one of the following organizations –
-A2LA
-NVLAP
-IAS
-ACLASS
-PJLA
-L-A-B
The specific test must be included in the scope of the current certification/accreditation at the time the test is performed as verified on the accrediting organization's website. The purchase order for testing at an accredited laboratory shall require that tests be performed in accordance with the accredited program. The lab results must contain a statement that the test(s) were performed in accordance with their accredited program. If no labs with this accreditation are available, the Buyer shall be advised of the lab that the Completion Supplier will use with sufficient notice to allow for surveillance activities of the tests by the

Buyer's representative. The Completion Supplier is also allowed to perform any or all of these tests after the successful completion of a CG survey in which the capability of the supplier to perform the tests is assessed and found to be acceptable.

IV. The following chemical constituents have been identified as critical to the materials listed below in order to perform their intended safety function –
304/304L SS – Cr, Ni
316/316L SS – Cr, Ni, Mo
347 SS – Cr, Ni, Cb
Incoloy 800 – Ni, Cr
These chemical constituents shall be tested for and individually identified on the test results along with the results of the test.

V. Perform tensile, hardness and proof load testing per ASTM A370. Leeb hardness testing to be performed in accordance with ASTM A956.

VI. Perform chemical verification testing per ASTM A751.

VII. Sampling for tests and inspections found in this section shall be performed per the guidance found in EPRI TR-017218. Accept on 0 defects and reject on 1 or more defects.

VIII. Each individual lot of material shall be sampled as specified below. A lot of material is defined as a single heat or run of material that is cast, extruded, or otherwise formed from a common batch of raw materials.

IX. Pressure testing, hydrostatic or pneumatic, shall be performed in accordance with Buyer approved procedures. The Buyer shall be notified of an impending pressure test to allow for surveillance activities by the Buyer's representative.

X. All inspection, examination, and test results shall be submitted to the Buyer for review within a reasonable time frame after performance of the inspection, examination, or test. The code or standard to which the test or inspection was performed and against which the results were verified shall be listed along with the results of the test, examination, or inspection.

XI. When a service is provided by a 3rd party entity (waterjet cutting, machining, etc.) that has not been evaluated by BNI, traceability of the item/material must be ensured by having a quality representative from the Completion Supplier visit the sub supplier to witness the first operation of the service (cutting, Marking, segregating...). Completion Supplier is to perform additional surveillances depending on the results of the first surveillance and the level of rigor with which the sub-supplier maintains the material traceability.

3.16.4.2 Testing and Inspection Requirements for **Pipe, Fittings and Flanges** to be performed by the Completion Supplier

All testing and inspections shall be performed, as detailed below, to verify compliance with ASME SA403, SA312 and SA182, SA480, SA961, ASME B16.11, ASME B16.5, ASME B16.9 and data sheets, as applicable.

INSPECTION REQUIREMENTS

Visual Inspection

Inspect each item to confirm that the material marking/identification is in accordance with the applicable ASTM/ASME specification, is clearly readable, and has no indication of re-marking by other parties. For the blank flanges to be used for destructive testing, the

following markings shall be present on each flange- heat #, manufacture's name or trademark, material, & size.

Sampling is not permitted.

Dimensional Inspection

Perform dimensional inspection of the pipe, fittings, flanges, and flow conditioner that are to be used in production as follows:

Pipe-	Wall thickness at each end of the pipe
Pipe Fittings-	Wall thickness at each end
	End to End and / or End to Centerline
Flange-	Thickness
	Bore Diameter
Flow Conditioner-	Outside Diameter
	Thickness

Normal sampling per EPRI TR-017218 Table 2-1, Recommended Set of Nondestructive Test, and Inspection Sampling Plan.

TESTING REQUIREMENTS

Tensile / Yield/Elongation Testing

Perform tensile, yield, and elongation testing of the pipe, fittings, and flanges (except pipe caps or plugs)

Sample per plan found in EPRI TR-017218 Table 2-2, Recommended Destructive Test and Inspection Sampling Plan.

Note: Flow conditioner is excluded from this testing

Chemical Composition Testing/Verification

Perform PMI on the pipe, fittings, flanges, and flow conditioner.

Normal sampling per EPRI TR-017218 Table 2-1, Recommended Set of Nondestructive Test, and Inspection Sampling Plan.

3.16.4.3 Testing and Inspection Requirements for the **ADS fans** to be performed by the Completion Supplier

All testing and inspections shall be performed, as detailed below, to verify compliance with Section 3.17.12 of this specification and other purchasing document requirements.

INSPECTION REQUIREMENT

Visual Inspection

Inspect the fans and related documentation as received from the supplier for conformance with the purchasing documents.

Sampling is not permitted.

TESTING REQUIREMENT

Pressure Boundary Integrity Testing/Verification

Perform bubble leak detection test to verify that the housing and flanges are able to withstand the pressures of the air supply line of the ammonia dilution skid. The test will be conducted with the fan off. The acceptance criteria shall be no bubble growth in the flanged and/or gasketed joints

Sampling is not permitted.

3.16.4.4 Testing and Inspection Requirements for **Butterfly Valves** to be performed by the Completion Supplier

All testing and inspections shall be performed to verify compliance with ASTM A351, ASTM A693or ASTM A564, ASME B16.34, API 598 and API 609 as applicable.

INSPECTION REQUIREMENTS

Visual Inspection - Material Markings/Identification

Inspect each valve to confirm that the valve marking/identification is in accordance with purchasing documents is clearly readable and has no indication of re-marking by other parties.

Sampling is not permitted.

TESTING REQUIREMENT

Chemical Composition Testing/Verification

Perform PMI on the body

Sampling is not permitted.

Pressure Boundary Integrity Testing/Verification

Perform shell pressure test on all valves per ASME B16.34 Section 7. The performance of this test will use the system design pressure in lieu of the 38 C (100 F) pressure rating. No less than 1.5 times the system design pressure for hydrostatic test, or 1.1 times the system design pressure for pneumatic test, according to the location of the item tested.

Sampling is not permitted.

3.16.4.5 Testing and Inspection Requirements for **Ball Valves** to be performed by the Completion Supplier

All testing and inspections shall be performed to verify compliance with ASTM A351, ASME B31.3, B16.34, and API 598, as applicable.

INSPECTION REQUIREMENTS

Visual Inspection - Material Markings/Identification

Inspect each valve to confirm that the valve marking/identification is in accordance with purchasing documents, is clearly readable, and has no indication of re-marking by other parties.

Sampling is not permitted.

TESTING REQUIREMENTS

Chemical Composition Testing/Verification

Perform PMI on all valve bodies and end connections.

Sampling is not permitted.

Pressure Boundary Integrity Testing/Verification

Perform shell pressure test per ASME B16.34, Section 7. The performance of this test will use the system design pressure in lieu of the 38 C (100 F) pressure rating. No less than 1.5 times the system design pressure for hydrostatic test, or 1.1 times the system design pressure for pneumatic test, according to the location of the item tested.

Normal sampling per EPRI TR-017218 Table 2-1, Recommended Set of Nondestructive Test, and Inspection Sampling Plan.

3.16.4.6 Testing and Inspection Requirements for **Pressure Regulator** to be performed by the Completion Supplier

All testing and inspections shall be performed to verify compliance with ASTM A351, ASME B31.3, and B16.34, as applicable.

INSPECTION REQUIREMENTS

Visual Inspection - Material Markings/Identification

Inspect pressure regulator to confirm that the marking/identification is in accordance with purchasing documents, is clearly readable, and has no indication of re-marking by other parties.

Sampling is not permitted.

TESTING REQUIREMENTS

Chemical Composition Testing/Verification

Perform PMI on regulator body.

Sampling is not permitted.

Pressure Boundary Integrity Testing/Verification

Perform pressure test, the performance of this test will use the system design pressure, no less than 1.5 times the system design pressure for hydrostatic test, or 1.1 times the system design pressure for pneumatic test, according to the location of the item tested.

Sampling is not permitted

3.16.4.7 Testing and Inspection Requirements for **Y- Strainer** to be performed by the Completion Supplier

All testing and inspections shall be performed to verify compliance with ASTM A351 and ASME B31.3 Section 345, as applicable.

INSPECTION REQUIREMENTS

Visual Inspection - Material Markings/Identification

Inspect the strainer to confirm that the marking/identification is in accordance with purchasing documents, is clearly readable, and has no indication of re-marking by other parties.

Sampling is not permitted.

TESTING REQUIREMENTS

Chemical Composition Testing/Verification

Perform PMI on strainer body and bolted cover.

Sampling is not permitted.

Pressure Boundary Integrity Testing/Verification

Perform pressure test, the performance of this test will use the system design pressure, no less than 1.5 times the system design pressure for hydrostatic test, or 1.1 times the system design pressure for pneumatic test, according to the location of the item tested.

Sampling is not permitted.

3.16.4.8 Testing and Inspection Requirements for the **Thermowells** to be performed by the Completion Supplier

All testing and inspections shall be performed, as detailed below, to verify compliance with purchasing documents, ASME Section VIII, Div. 1, UG-100, and ASME B31.3 Section 345 and other applicable specifications.

INSPECTION REQUIREMENT

Visual Inspection

Inspect the thermowells and related Completion Supplier documentation for compliance with the purchasing documents.

Sampling is not permitted.

TESTING REQUIREMENT

Chemical Composition Testing/Verification

Perform PMI on the flanged thermowells (flange and well body) and socket weld thermowells (well body) to verify conformance with the applicable material specifications.

Tightened sampling per EPRI TR-017218 Table 2-1, Recommended Set of Nondestructive Test and Inspection Sampling Plan.

Where PMI is destructive, utilize Destructive sampling per EPRI TR-017218 Table 2-2 on per lot basis. Lot is established by single line item per single manufacture or single heat number.

Pressure Boundary Integrity Testing/Verification

Perform pressure test on the thermowells per ASME B31.3, (socket weld thermowell) and ASME BPVC Section VIII, Div. 1, UG-100 (flanged thermowells)

Sampling is not permitted.

3.16.4.9 Testing and Inspection Requirements for the **Gaskets** to be performed by the Completion Supplier

All testing and inspections shall be performed, as detailed below, to verify compliance with purchasing documents and ASME B31.3, B16.20, or ASME Section VIII, as applicable.

INSPECTION REQUIREMENT

Visual Inspection

Inspect the gaskets (for configuration and appearance) and related Completion Supplier documentation for any damage and for compliance with the purchasing documents. For all spiral wound gaskets, verify markings are per ASME B16.20.

Sampling is not permitted.

Dimensional Inspection

Measure the inside and outside diameters of the round gaskets and the thickness and gasket width of the rectangular gaskets to verify conformance the purchasing documents.

Normal sampling per EPRI TR-017218 Table 2-1, Recommended Set of Nondestructive Test, and Inspection Sampling Plan. In this instance a lot is defined as all gaskets purchased on a single line item of the PO.

TESTING REQUIREMENT

Pressure Boundary Integrity Testing/Verification

Perform pressure test and leak detection test on "Q" items with associated gaskets per ASME B31.3, Section 345.8 or ASME Section VIII, UG-100, as applicable.

Sampling is not permitted. Testing of gaskets will occur at every joint. Additional gaskets that are purchased as spares or for replacement of test gaskets at final assembly are not required to undergo testing.

NOTE: Additional gaskets shall be procured as necessary to accommodate pressure testing. The test gaskets shall be identical (purchased on the same line item of the PO) to those that will be used in the final skid to be delivered to the WTP.

3.16.4.10 Deleted

3.16.4.11 Testing and Inspection Requirements for the **Fasteners** to be performed by the Completion Supplier

All testing and inspections shall be performed, as detailed below, to verify compliance with purchasing documents, ASME/ASTM SA/A193, SA/A194, ASTM A490, A563, F436, ASME B18.2.1, B18.2.2, and B18.21.1, as applicable.

NOTE: This section does not cover fasteners that are supplied with separately purchased items (valve, strainer, etc.).

For sampling washers, a "lot" shall be defined as all items purchased under a single line item of the purchase order

INSPECTION REQUIREMENT

Visual Inspection

Inspect the fasteners to verify compliance with the purchasing documents and to ensure that markings are as specified in the applicable ASTM specification.

Normal sampling per EPRI TR-017218 Table 2-1, Recommended Set of Nondestructive Test, and Inspection Sampling Plan.

Dimensional Inspection

Measure the following dimensions for compliance with the purchase order requirements and the applicable ASTM and ASME specification

Bolts/Studs - Nominal Diameter

Threads (2A)

Nuts - Thickness

Threads (2B)

Normal sampling per EPRI TR-017218 Table 2-1, Recommended Set of Nondestructive Test, and Inspection Sampling Plan.

Washers - Inner Diameter (all types)

- Side length (beveled washers)

Reduced sampling plan per EPRI TR-017218 Table 2-1, Recommended Set of Nondestructive Test, and Inspection Sampling Plan.

TESTING REQUIREMENT

Chemical Composition Testing/Verification

Perform PMI on stainless steel bolts, studs and nuts. (ASTMA490 bolts and studs and corresponding ASTM A563 nuts do not require PMI)

Normal sampling per EPRI TR-017218 Table 2-1, Recommended Set of Nondestructive Test, and Inspection Sampling Plan.

For 347 material grade stainless steel fasteners use Destructive sampling per EPRI TR-017218 Table 2-2 Recommended Destructive Test, and Inspection Sampling Plan.

Hardness/Tensile/Proof Load Testing

Perform hardness testing on the bolts, studs, and nuts to ensure conformance with the applicable ASTM/ASME specifications and grade:

Hardness testing of 300 series SS bolts/studs without an identified ASTM or ASME specification shall meet the following criteria:

Diameter > ¾": Rockwell "B" 96 max

Diameter <= ¾": Rockwell "B" 100 max

For hardness testing sample per EPRI TR-017218 Table 2-2, Recommended Destructive Test, and Inspection Sampling Plan

Tensile testing may be used in lieu of hardness testing. For tensile testing sample per EPRI TR-017218 Table 2-2, Recommended Destructive Test, and Inspection Sampling Plan

Proof load testing may be used in lieu of hardness testing. Proof load testing is a non-destructive test for nuts, sample according to Normal sampling per EPRI TR-017218 Table 2-1, Recommended Set of Nondestructive Test, and Inspection Sampling Plan.

3.16.4.12 Testing and Inspection Requirements for **Globe Control Valves** to be performed by the Completion Supplier

All testing and inspections shall be performed to verify compliance with ASTM A182, ASTM A351, ASME B31.3, ASME B16.34, and API 598, as applicable.

INSPECTION REQUIREMENTS

Visual Inspection - Material Markings/Identification

Inspect each valve to confirm that the valve marking/identification is in accordance with applicable codes/standards, is clearly readable, and has no indication of re-marking by other parties.

Sampling is not permitted.

TESTING REQUIREMENTS

Chemical Composition Testing/Verification

Perform PMI on valve bodies, bonnets and flanged end connections (where not integral to the body).

Sampling is not permitted.

Pressure Boundary Integrity Testing/Verification

Perform shell pressure test per ASME B16.34, Section 7. The performance of this test will use the system design pressure in lieu of the 38 C (100 F) pressure rating. No less than 1.5 times the system design pressure for hydrostatic test, or 1.1 times the system design pressure for pneumatic test, according to the location of the item tested.

Sampling is not permitted.

3.16.4.13 Testing and Inspection Requirements for **Pressure Gauges** to be performed by the Completion Supplier

All testing and inspections shall be performed to verify conformance with ASME B31.3.

INSPECTION REQUIREMENTS

Visual Inspection - Material Markings/Identification

Inspect the gauges to confirm that the marking/identification is in accordance with purchasing documents, is clearly readable, and has no indication of re-marking by other parties.

Sampling is not permitted.

TESTING REQUIREMENTS

Pressure Boundary Integrity Testing/Verification

Perform pressure test, the performance of this test will use the system design pressure, no less than 1.5 times the system design pressure for hydrostatic test, or 1.1 times the system design pressure for pneumatic test, according to the location of the item tested.

Sampling is not permitted

3.16.4.14 Testing and Inspection Requirements for **Process Offgas Heaters** to be performed by the Completion Supplier

All testing and inspections shall be performed to verify compliance with ASME SA240, ASME SB515, SB163, SB751, and ASME B&PVC Section VIII-Div. 1, UG-100, as applicable.

INSPECTION REQUIREMENTS

Visual Inspection - Material Markings/Identification

Inspect the heater assembly components at raw material state prior to fabrication to confirm that the manufacturer's marking/identification and configuration is in accordance with purchasing documents and drawings and is clearly readable. (Components to be inspected are the flange plates, thermocouple tubing, and heater tubing)

Sampling is not permitted.

Dimensional Inspection

Measure the following dimensions for compliance with the approved drawings, governing codes/standards, and purchase order requirements –

Flange Plate Thickness –No Sampling Permitted

Flange Plate Width – No Sampling Permitted

Flange Plate Height – No Sampling Permitted

Tube Wall Thickness - Reduced sampling plan per EPRI TR-017218 Table 2-1, Recommended Set of Nondestructive Test, and Inspection Sampling Plan.

TESTING REQUIREMENTS

Chemical Composition Testing/Verification

Perform PMI on the flange plate, filler material (pre-fab, if any), element tube, and thermocouple nipple.

Samples of the materials shall be cut from the original material at the heater supplier's facilities and delivered to the Completion Supplier for testing. Traceability shall be maintained from the parent material to the test pieces. This shall be accomplished by witnessing of the cutting and transfer of information by a representative of the Completion Supplier's quality staff.

One PMI test is to be performed per heat of material.

Pressure Boundary Integrity Testing/Verification

Perform pressure test on the heater per the purchasing document requirements.

Sampling is not permitted.

3.16.4.15 Testing and Inspection Requirements for **Expansion Joints** to be performed by the Completion Supplier

All testing and inspections shall be performed to verify compliance with ASME SA240, ASME SA182 A479, ASME B31.3, ASME B16.5, ASME B&PVC Section VIII-Div. 1, EJMA, and other PO requirements, as applicable.

INSPECTION REQUIREMENTS

Visual Inspection - Material Markings/Identification

Inspect the Expansion Joints materials in the raw material state prior to fabrication to confirm that the manufacturer's marking/identification is in accordance with purchasing documents and drawings and is clearly readable.

Sampling is not permitted.

Configuration Inspection

Visually inspect each expansion joint to verify the correct number and shape of the convolutions is as specified on the on the purchasing documents, datasheets, and applicable design drawings.

Sampling is not permitted.

Dimensional Inspections

Perform the following dimensional inspections

- Flange Dimensions
  - Rectangular Expansion Joint
    - Inside dimensions
    - Thickness
    - Width
  - Round Expansion Joints
    - Inside Diameter
    - Flange Thickness

Sampling is not permitted

- Bellow Material Thickness

Normal sampling per EPRI TR-017218 Table 2-1, Recommended Set of Nondestructive Test, and Inspection Sampling Plan.

Chemical Composition Testing/Verification

Perform PMI on flanges, bellows material (pressure retaining) and the weld filler material.

Normal sampling per EPRI TR-017218 Table 2-1, Recommended Set of Nondestructive Test, and Inspection Sampling Plan

Traceability must be maintained from the parent material. This shall be accomplished by a surveillance or on-site over sight performed by a representative of the Completion Supplier's quality staff.

Pressure Boundary Integrity Testing/Verification

Perform pressure test on all expansion joints per the requirements of the purchasing documents.

Sampling is not permitted.

Weld Integrity Verification

Perform Liquid Penetrant Examination on all pressure retaining welds to verify pressure boundary. (Pressure retaining welds are defined as the longitudinal bellows welds and the bellows to flange welds.)

Sampling is not permitted.

3.16.4.16 Testing and Inspection Requirements for **HEPA Filter Housing** to be performed by the Completion Supplier

All testing and inspections shall be performed to verify compliance with the material specification referenced in the purchase order and ASME AG-1-1997 with AG-1A-2000 Addenda, and ASME/ASTM A240, A312, A479, A182, and A276, as applicable.

.

INSPECTION REQUIREMENTS

Visual Inspection - Material Markings/Identification

Inspect the housing to confirm that the marking/identification is in accordance with purchasing documents and is clearly readable.

Sampling is not permitted.

TESTING REQUIREMENTS

Chemical Composition Testing/Verification

PMI is required to be performed on the filter housing body, housing cover and any pipe and pipe fittings to verify conformance with the applicable codes/standards. PMI on the HEPA housing pressure boundary components was performed by the previous supplier. No further PMI is required by the Completion Supplier as all of the previous results were given a BNI submittal code status 1.

Sampling is not permitted.

Pressure Boundary Integrity Testing/Verification

Perform pressure decay test(s) on the filter housing assembly per ASME AG-1, Article III-4200, Pressure Decay test.

Sampling is not permitted.

3.16.4.17 Deleted

3.16.4.18 Testing and Inspection Requirements for the **Structural and Pressure Boundary Steel** to be performed by the Completion Supplier

All testing and inspections shall be performed, as detailed below, to verify compliance with purchasing documents, ASTM A240, A276, A554, A312, ASME BPV Code Section VIII Division 1, and Section V Article 10.

INSPECTION REQUIREMENT

Visual Inspection

Inspect the pressure boundary and structural steel to confirm that the marking/identification is in accordance with purchasing documents, is clearly readable, and has no indication of re-marking by other parties. Where stainless steel is remarked see "Chemical Composition Comparator test" section below, for carbon steel remarking treat each remarked piece as one lot and perform required testing per lot.

There may be instance where remarking does occur, e.g. only a portion of the complete piece of material is purchased, in which case additional testing is necessary to establish traceability. See "Chemical Composition Comparator Test" section below.

Sampling is not permitted.

Dimensional Inspection

Measure the following dimensions for compliance with the purchase order requirements and the applicable ASTM specification -

Plate and Sheet -	Thickness
Angle -	
	Leg Height
	Width
Structural Tube -	Wall Thickness
	Width
Flat Bar -	Width
	Thickness
Round Bar -	Diameter

Tightened sampling per EPRI TR-017218 Table 2-1, Recommended Set of Nondestructive Test and Inspection Sampling Plan. Accept on 0 defects and reject on 1 or more defects.

TESTING REQUIREMENT

Chemical Composition Testing/Verification

Perform PMI on pressure boundary and structural stainless steel.

Normal sampling per EPRI TR-017218 Table 2-1, Recommended Set of Nondestructive Test, and Inspection Sampling Plan.

Chemical Composition Comparator Test

Perform additional PMI at the time of receipt on materials that have been remarked.

In addition to the chemical composition test that is required on all received materials (normal sampling plan), PMI is required of all other sub-supplier remarked and untested pieces in a lot. For this comparator test either XFR or OES PMI may be used. For each heat of material, the results of the comparator and chemical composition test shall meet the ASTM/ ASME standard, taking into account the margin of error of the PMI gun used.

Pressure Boundary **and Structural** Integrity Testing/Verification

Perform tensile/yield/elongation testing on the pressure boundary and structural carbon and stainless steel.

Sample per EPRI TR-017218 Table 2-2, Recommended Destructive Test and Inspection Sampling Plan.

3.16.4.19 Testing and Inspection Requirements for **Weld Filler Material** to be performed by the Completion Supplier

All testing and inspections shall be performed, as detailed below, to verify compliance with AWS/ASME A/SFA 5.9, A/SFA 5.14, A/SFA 5.18, A/SFA 5.20, and A/SFA 5.22, as applicable.

INSPECTION REQUIREMENTS

Visual Inspection

Inspect each container/spool of weld filler to confirm that the material marking/identification is in accordance with the applicable AWS specification, is clearly readable, and has no indication of re-marking by other parties.

Sampling is not permitted.

Dimensional Inspection

Measure the diameter of the weld filler metal for conformance with the applicable AWS/ASME specification.

Normal sampling per EPRI TR-017218 Table 2-1, Recommended Set of Nondestructive Test, and Inspection Sampling Plan.

TESTING REQUIREMENTS

Chemical Composition Testing/Verification

Perform PMI on all the weld wire per applicable AWS/ASME standard.

Normal sampling per EPRI TR-017218 Table 2-1, Recommended Set of Nondestructive Test, and Inspection Sampling Plan.

3.16.4.20 Testing and Inspection Requirements for **Fan Boots** to be performed by the Completion Supplier

All inspections shall be performed, as detailed below, to verify compliance with all applicable purchase order requirements.

INSPECTION REQUIREMENTS

Visual Inspection

Visually inspect each fan boot to verify configuration and marking conformance to the PO requirements including drawings and datasheets.

Sampling is not permitted.

Visual Inspection of Bellows Material

Visually inspect bellows material shows no indication of delamination, tears or compression set.

Sampling is not permitted

Dimensional Inspection

Measure the end to end of the fan boot for conformance with PO requirements.

Sampling is not permitted.

Pressure Boundary Integrity Testing/Verification

Perform pressure test, the performance of this test will use the system design pressure, no less than 1.1 times the system design pressure for pneumatic test, according to the location of the item tested.

Sampling is not permitted.

3.16.4.21 Testing and Inspection Requirements for **Instrument Tubing, Valves, and Fittings** to be performed by the Completion Supplier

All testing and inspections shall be performed to verify compliance with ASME SA240, ASME SA182, ASME B31.3, ASME B16.5, ASME B&PVC Section VIII-Div. 1, and other PO requirements, as applicable.

INSPECTION REQUIREMENTS

Visual Inspection

Inspect each item to confirm that the material marking/identification is in accordance with the applicable ASTM/ASME specification, is clearly readable, and has no indication of re-marking by other parties.

Sampling is not permitted.

Dimensional Inspection

Perform dimensional inspection of the instrument tubing and fittings that are to be used in production as follows:

Tube - Wall thickness at each end

Tube Fittings- End to End and / or End to Centerline

Normal sampling per EPRI TR-017218 Table 2-1, Recommended Set of Nondestructive Test, and Inspection Sampling Plan.

TESTING REQUIREMENTS

Chemical Composition Testing/Verification

Perform PMI on the tubing.

Normal sampling per EPRI TR-017218 Table 2-1, Recommended Set of Nondestructive Test, and Inspection Sampling Plan.

Pressure Boundary Integrity Testing/Verification

Perform pressure test for installed items per the functional test or shop inspection test plan.

Sampling is not permitted.

3.16.4.22 Testing and Inspection Requirements for **Insulating Pads** to be performed by the Completion Supplier

All testing and inspections shall be performed, as detailed below, to verify compliance with all applicable purchase order requirements.

INSPECTION REQUIREMENTS

Visual Inspection

Visually inspect each insulating pad to verify configuration and marking conformance to the PO requirements including drawings and datasheets.

Sampling is not permitted.

Dimensional Inspection

Measure the length, width, and thickness of each insulating pad to ensure conformance with PO requirements.

Sampling is not permitted.

TESTING REQUIREMENTS

Compression Testing/Verification

Perform Compression tests per IONEX test procedure, test to verify 1.5 x minimum 1300 psi. Compression test according to lot defined by all line items in a single PO from a single manufacturer.

Destructive sampling per EPRI TR-017218 Table 2-2 Recommended Destructive Test, and Inspection Sampling Plan on per lot basis as defined above.

3.16.4.23 Testing and Inspection Requirements for **Strut Mounts, Clamps, and Nuts** to be performed by the Completion Supplier

All testing and inspections shall be performed, as detailed below, to verify compliance with all applicable purchase order requirements.

INSPECTION REQUIREMENTS

Visual Inspection

Visually inspect each clamp, mount and channel nut to verify configuration and marking conformance to the PO requirements including drawings and datasheets.

Sampling is not permitted.

Dimensional Inspection

Perform dimensional inspection on the components as follows:

Strut Mounts –	Width
	Thickness
Clamps –	Width
	Thickness
Channel Nuts –	Thread Gauge (B for internal thread)

Normal sampling per EPRI TR-017218 Table 2-1, Recommended Set of Nondestructive Test, and Inspection Sampling Plan.

TESTING REQUIREMENTS

Chemical Composition Testing/Verification

Perform PMI on the following.
Clamps (exclude fasteners)
Strut mounts (excluding elastomer cushion)
Channel nuts (excluding spring)

Normal sampling per EPRI TR-017218 Table 2-1, Recommended Set of Nondestructive Test and Inspection Sampling Plan.

3.16.4.24 Testing and Inspection Requirements for **Pressure Transmitter** to be performed by the Completion Supplier

All testing and inspections shall be performed to verify conformance with ASME B31.3.

INSPECTION REQUIREMENTS

Visual Inspection - Material Markings/Identification

Inspect the pressure transmitter to confirm that the marking/identification is in accordance with purchasing documents, is clearly readable, and has no indication of re-marking by other parties.

Sampling is not permitted.

TESTING REQUIREMENTS

Chemical Composition Testing/Verification

Perform PMI on the process flanges and measuring cell body.

Sampling is not permitted.

Pressure Boundary Integrity Testing/Verification

Perform pressure test, the performance of this test will use the system design pressure, no less than 1.5 times the system design pressure for hydrostatic test, or 1.1 times the system design pressure for pneumatic test, according to the location of the item tested.

Sampling not permitted.

3.17 Engineering requirements for commercial components purchased from a sub supplier or commercial items provided by WTP for reuse.

3.17.1 The TCO skid and ammonia dilution skid are fabricated from raw materials and purchased components. Fabrication and testing the TCO and ammonia dilution skid from raw materials is well understood and adequately defined in this specification. The purchase of commercial components or reuse of commercial components provided by WTP for a Q application is a complex process and in some cases requires additional engineering controls above those established for CGD. Some commercial components with a quality level of Q or CM are manufactured using a special process (welding, heat treatment and NDE). WTP may define additional requirements for commercial items manufactured using a special process. Based on the components quality level and safety function, engineering will define in the sections below any additional requirements or define requirements that are not required for purchased or reused commercial components.

3.17.2 Round bellows for the TCO, LVP-BLWS-00053, LVP-BLWS-00061, LVP-BLWS-00080 and LVP-BLWS-00081.

The Quality level for the round bellows is Q. The safety function is confinement of offgas. Round bellows are commercial items for general industry use and are basically catalog items ready for installation from the manufacturer. The round bellows for the TCO will be manufactured using a special process (welding and nondestructive examination). Heat treatment is not required, as defined in Section 3.1.12.

- The Completion Supplier / bellows manufacturer shall submit outline drawings with welding and NDE defined on the drawings.
- The Completion Supplier/ bellows manufacturer shall submit weld procedures for review.
- The Completion Supplier / bellows manufacturer shall have welder qualifications on file for review by the WTP supplier Quality representative.
- The Completion Supplier / bellows manufacturer shall submit NDE procedures for review.
- The Completion Supplier / bellows manufacturer shall submit test procedure(s) for review.
- The Completion Supplier / bellows manufacture is not required to minimize halide or chloride exposure during the manufacturing process or shipping. If the bellows manufacturer has a practice in place for minimizing halide and chlorides, it may be used. Submittal of halide / chloride control program is not required because the LAW Offgas contain chlorides.
- The Completion Supplier / bellows manufacture shall notify WTP Supplier Quality Representative in advance for witnessing the first operation basis for each reviewed weld procedure and NDE procedure. It is acceptable for WTP SQR to witness welding and NDE of similar production items.
- The WTP supplier Quality Representative will witness testing performed for each test procedure.

3.17.3 Thermowells for the TCO, TW 0507, 0508, 0511, 0513, 0517, 0519, & 0524.

The Quality level for the thermowells is Q. The safety function is confinement of offgas. Thermowells are commercial items for general industry use and are basically catalog items ready for installation from the manufacturer.

- The Completion Supplier / thermowell manufacturer shall submit outline drawings.
- The Completion Supplier / thermowell manufacture is not required to minimize halide or chloride exposure during the manufacturing process or shipping. If the thermowell manufacturer has a practice in place for minimizing halide and chlorides, it may be used. Submittal of halide / chloride control program is not required because the LAW Offgas contain chlorides.

3.17.4 Recuperative heat exchanger, LVP-HX-00001, (non Pressure boundary welding, NDE) Commercial Material (CM), enclosed in a Q confinement enclosure.

The recuperative heat exchanger with inlet and outlet bellows are commercial items for general industry use. The recuperative heat exchanger with inlet and out bellows will be manufactured using a special processes (welding, (heat treatment if required) and nondestructive examination (NDE)).

- The Completion Supplier / recuperative heat exchanger manufacture shall submit outline drawings with welding and NDE defined on the drawings.
- The Completion Supplier / recuperative heat exchanger manufacturer shall submit weld procedures for review. Include weld procedure(s) for bellows fabrication.
- The Completion Supplier / recuperative heat exchanger manufacturer shall have welder qualifications on file for review by the WTP supplier Quality representative (SQR).
- The Completion Supplier / recuperative heat exchanger manufacturer shall submit NDE procedures for review.
- The Completion Supplier / recuperative heat exchanger manufacturer shall submit heat treat procedures for review (if used).
- The Completion Supplier / recuperative heat exchanger manufacturer shall submit test procedure(s) for review.
- The Completion Supplier / recuperative heat exchanger manufacturer is not required to minimize halide or chloride exposure during the manufacturing and shipping process. If the recuperative heat exchanger / bellows manufacturer has a practice in place for minimizing halide and chlorides, it may be used. Submittal of halide / chloride control program is not required. The process flowing through the recuperative heat exchanger will include chlorides.
- The Completion Supplier / recuperative heat exchanger manufacturer shall notify WTP Supplier Quality Representative in advance for witnessing the first operation basis for each reviewed weld procedure, heat treat procedure (if used) and non destructive examination (NDE) procedure. It is acceptable for WTP SQR to witness welding, heat treatment and NDE of similar production items.
- The Completion Supplier / recuperative heat exchanger manufacturer shall notify WTP Supplier Quality Representative in advance for witnessing the first operation basis for pressure testing.

3.17.5 Rectangular bellows for the TCO, LVP-BLWS-00055, 00056, & 00058.

The Quality level for the rectangular bellows is Q. The safety function is confinement of offgas. Rectangular bellows are commercial items for general industry use and are basically catalog items ready for installation from the manufacturer. The rectangular bellows for the TCO will be manufactured using special processes (welding and nondestructive examination). Heat treatment is not required, as defined in Section 3.1.12.

- The Completion Supplier / bellows manufacturer shall submit outline drawings with welding and NDE defined on the drawings.
- The Completion Supplier / bellows manufacturer shall submit weld procedures for review.
- The Completion Supplier / bellows manufacturer shall have welder qualifications on file for review by the WTP supplier Quality representative.
- The Completion Supplier / bellows manufacturer shall submit NDE procedures for review.
- The Completion Supplier / bellows manufacturer shall submit test procedure(s) for review.
- The Completion Supplier / bellows manufacturer is not required to minimize halide or chloride exposure during the manufacturing and shipping process. If the bellows manufacturer has a

practice in place for minimizing halide and chlorides, it may be used. Submittal of halide / chloride control program is not required because the LAW Offgas contains chlorides.
• The Completion Supplier / bellows manufacturer shall notify WTP Supplier Quality Representative in advance for witnessing the first operation basis for each reviewed weld procedure. It is acceptable for WTP SQR to witness welding of similar production items.
• The WTP supplier Quality Representative will witness testing performed for each test procedure.

3.17.6 Process heaters LVP-HTR-00002A, B, C, D & E

The Quality level for the process heaters is Q. The safety function is confinement of offgas. Process heaters are commercial items for general industry use and are basically catalog items ready for installation from the manufacturer. The process heaters for the TCO will be manufactured using special processes (welding and nondestructive examination).

• The Completion Supplier / process heater manufacturer shall submit outline drawings with welding and NDE defined on the drawings.
• The Completion Supplier / process heater manufacturer shall submit weld procedures for review.
• The Completion Supplier / process heater manufacturer shall have welder qualifications on file for review by the WTP supplier Quality representative.
• The Completion Supplier / process heater manufacturer shall submit NDE procedures for review.
• The Completion Supplier / process heater manufacturer shall submit test procedure(s) for review.
• The Completion Supplier / process heater manufacturer is not required to minimize halide or chloride exposure during the manufacturing and shipping process. If the process heater manufacturer has a practice in place for minimizing halide and chlorides, it may be used. Submittal of halide / chloride control program is not required because the LAW Offgas contains chlorides.
• The Completion Supplier / process heater manufacturer shall notify WTP Supplier Quality Representative in advance for witnessing the first operation basis for each reviewed weld procedure. It is acceptable for WTP SQR to witness welding of similar production items.
• The WTP supplier Quality Representative will witness testing performed for each test procedure.

3.17.7 Flanged ball valves for the TCO, LVP-V-01547, 01548, 01609, 01610, 01611, 01612, 01613, 01614, 01615, 01616, 01617, 01618, 01619, 01620, 72263, 72264, 72265, 72266, 72267, 72334 and 72335.

The Quality level for the flanged ball valves is Q. The safety function is confinement of offgas. Flanged ball valves are commercial items for general industry use and are basically catalog items ready for installation from the manufacturer. The requirements specified under section 3.16.4.5 are adequate for the flanged ball valves. Additional engineering requirements are not required.

• The Completion Supplier / ball valve manufacturer is not required to minimize halide or chloride exposure during the manufacturing and shipping process. If the ball valve manufacturer has a practice in place for minimizing halide and chlorides, it may be used. Submittal of halide / chloride control program is not required because the LAW Offgas contains chlorides.

3.17.8 LVP-SCO-00001 and SCR-00001 catalyst sheet metal enclosures

The Quality level for the catalyst sheet metal enclosures is CM. The catalyst sheet metal enclosures do not have a safety function. The catalyst sheet metal enclosures are commercial items for general industry use and are catalog items ready for installation from the manufacturer. The catalyst sheet metal enclosures are manufactured using a special process (welding), based on the quality level and safety function additional engineering requirements are not required.

- The Completion Supplier / catalyst sheet metal enclosure manufacturer is not required to minimize halide or chloride exposure during the manufacturing process. Submittal of halide / chloride control program is not required because the LAW Offgas contains chlorides.

3.17.9 Deleted

3.17.10 Pipe and tubing for the TCO and ammonia dilution skid, production made, seamless or welded.

The Quality level for the pipe and tube is Q. The safety function is confinement of offgas, ammonia, C3 air and instrument air. Pipe and tubing are commercial items for general industry use and are basically catalog items ready for installation from the manufacturer. Welded pipe and tube is manufactured using a special process (welding and nondestructive examination). The requirements specified under section 3.16.4.2 are adequate. Additional engineering requirements are not required for pipe and tube.

- The Completion Supplier / pipe or tube supplier is not required to minimize halide or chloride exposure during the manufacturing or shipping. Submittal of halide / chloride control program is not required.

3.17.11 Junction boxes LVP-JB-00012, JB-0027 and / Control panel LVP-PNL-00003

The Quality level for junction boxes and the control panel is CM. The junction boxes and the control panel have no safety function. The junction boxes and control panel are commercial items for general industry use and are catalog items ready for installation from the manufacturer. Junction boxes and control panels are manufactured using a special process (welding). Based on the quality level and safety function additional engineering requirements are not required.

- The Completion Supplier / junction box control panel supplier is not required to minimize halide or chloride exposure during the manufacturing or shipping. Submittal of halide / chloride control program is not required.

3.17.12 Ammonia Dilution air fans, LVP-FAN-00001 and LVP-FAN-00002.

The Quality level for the fans on the ammonia dilution skid is Q for air permit. The fans do not have a safety function. Fan manufacturers produce commercial items for general industry use. These fans are basically catalog items ready for installation from the manufacturer. The fans are manufactured using a special process (welding and nondestructive examination). A standard fan from a manufacturer is acceptable for this application. The Completion Supplier will perform additional tests and inspections as defined in section 3.16.4.3 as part of the CGD process after the fans arrive at the Completion Suppliers shop. The tests below are designed to minimize quality risk and provide reasonable assurance that the product specified will perform as intended.

- The Completion Supplier / fan manufacturer shall submit outline drawings for installation and maintenance. Detailed fabrication drawings with weld symbols, are not required.

• Controls to minimize halide or chloride exposure during manufacture and shipping are not required. This fan is exposed to air and not subject to stress corrosion cracking, where halide / chloride control is important.
• The Completion Supplier / fan manufacturer weld procedures are not required for review.
• The Completion Supplier shall submit fan pressure test procedure(s) for review.
• The Completion Supplier / fan manufacturer shall submit technical data sheets for the coating, MSDS and fill out Appendix H, "Manufacturers standard coating data sheet".

The fan manufacturer shall perform a pressure test on the fans prior to shipping. It is preferred that the fan pressure test be performed before any coating system is applied. Since this fan may be made from coated parts already in inventory, the pressure test maybe performed after coating. The fan manufacturer shall perform a bubble test when the fan is not operating. The Completion Supplier Quality Representative will witness pressure testing. The acceptance criteria shall be no bubble growth in the area being inspected (flanged joints, gasket joints, mechanical seal tubing / piping). The object of the test is to confirm that the fan will hold pressure before the fan is shipped. This pressure test is required by engineering to minimize commercial risk.

3.17.13 Manual valves, control valves, strainer, pressure control valve, pressure gauges, pressure indicating transmitters, HEPA housings, and thermowells on the ammonia dilution skid supplied by the Completion Supplier or reused by WTP.

The Quality level for these items is Q. These items are commercial items for general industry use and are basically catalog items ready for installation from the manufacturer. The requirements specified under section 3.16 are adequate for these items. Additional engineering requirements are not required for these items on the ammonia dilution skid.

• The Completion Supplier / manufacturer / supplier are not required to minimize halide or chloride exposure during the manufacturing or shipping. Submittal of halide / chloride control program is not required.

3.17.14 Insulation stud material

• The Completion Supplier weld program has been surveyed and found acceptable.
• The Completion Supplier shall use a stud weld procedure with a status determined by WTP.
• The Completion Supplier shall check that stainless steel insulation studs are Nonmagnetic with a magnet. Nonmagnetic insulation studs are acceptable for use.

4 Materials

4.1 General

4.1.1 The Completion Supplier shall comply with specification 24590-WTP-3PS-G000-T0002, *Engineering Specification for Positive Material Identification (PMI) for Shop Fabrication.*

4.2 Construction

4.2.1 Materials of construction shall have properties suitable for the service conditions defined in the MDSs.

4.2.2 The ASME and/or ASTM material numbers and grades shall be identified and MTRs showing actual test report values shall be provided for the housing, ducts, weld filler metal, and support framing integral to the Thermal Catalytic Oxidizer/Reducer and the associated

Ammonia/Air Dilution assemblies. Material designations shall be indicated on the fabrication drawings and in the material lists.

4.2.3 Thermal Catalytic Oxidizer/Reducer and the associated Ammonia/Air Dilution skids shall be fabricated from structural steel shapes and plates properly reinforced to be self-supporting, capable of carrying the static loads of components and the stresses imposed during shipment, installation, and operation.

4.2.4 Thermal Catalytic Oxidizer/Reducer and the associated Ammonia/Air Dilution housings and outlet piping shall be fabricated from materials specified in the MDSs in Section 2 of the MR. Structural supports in contact with the offgas stream shall be constructed from the same material as the high temperature surfaces as specified on the MDS in Section 2 of the MR.

4.2.5 Where the Buyer has not specified material types, the Completion Supplier shall select materials giving consideration to the design life of the equipment, compatibility with adjacent materials, compatibility with the process materials and conditions, environmental conditions, and coating requirements. The Buyer shall review and approve materials selected by the Completion Supplier.

4.2.6 CMTRs, MTRs, C of Cs, etc. Are not required for non-permanent plant equipment.

4.3 Prohibited Materials

4.3.1 As applicable, mercury, zinc, cadmium, or other low melting point materials and halogens shall not be used in direct contact with stainless steel. This prohibition also applies to use of tools, fixtures, paints, coatings and sealing compounds, and any other equipment or materials used by the Completion Supplier in handling, assembly and storage of stainless steel parts or components. Except as excluded in section 3.17.

4.3.2 Asbestos shall not be used in any component of the Thermal Catalytic Oxidizer/Reducer, the associated Ammonia/Air Dilution units, and appurtenances.

4.3.3 The prohibited materials list excludes materials that might be used for bearings, brazed joints, or instruments.

4.3.4 The equipment provided to the Buyer shall not contain any of the materials listed in 24590-WTP-LIST-CON-08-0001, *Restricted Materials List WTP Safety Assurance* unless BUYER (Safety Assurance) approval is obtained.

4.4 Insulation

4.4.1 The Completion Supplier shall provide detailed insulation installation procedures for removable insulation only.

4.4.2 The Completion Supplier shall recommend cements, mastics, and adhesives that will be suitable for the maximum design temperature of the Thermal Catalytic Oxidizer/Reducer. The mixing of cements, mastics, etc., shall be done with deionized water.

4.4.3 Provide removable / reusable insulation for the TCO inlet and outlet bellows (LVP-BLWS-00053 and 00051), and rectangular / round expansion joints.

4.4.4 Insulation thickness greater than three (3) inches applied to the exterior of the Thermal Catalytic Oxidizer/Reducer shall be applied in multiple layers with staggered joints. Each layer of multiple layer and double insulation shall be held in place separately.

4.4.5 Exterior insulation shall be jacketed with 304 stainless steel. The stainless steel jacketing shall be 0.024 inch thick flat and smooth sheet, and conform to ASTM A240. The jacketing shall be furnished in the annealed or soft condition with a regular 2B mill finish and have a factory applied moisture barrier.

4.4.6 Design jacketing with an overlap of 2 inch minimum between sections. Standard process industry practices shall be followed.

4.4.7 The TCO insulation shall be designed to prevent the ingress of water during the 2.0 hour fire water spray. The fire water spray is expected to occur once during the 40 year life of the plant. The design of the jacketing shall be such that the joints shed water. Process Industry Practices, PIP INIH1000, Hot Insulation Installation Details, provide generic details for weatherproof jacketing.

4.4.8 All insulation components, including facings, mastics, and adhesives, shall meet ASTM E84 fire hazard rating not to exceed 25 for flame spread and 50 for fuel contributed and smoke developed. Ratings used are determined by Underwriters Laboratories Inc. (UL).

4.4.9 Submit welding procedures for any insulation tabs or studs that are welded to the pressure boundary, as required.

4.5 Government Material

If the Completion Supplier so chooses, the Buyer shall supply, as Government Furnished Equipment (GFE), miscellaneous parts, and a certified bulk quantity of 347 stainless steel. See Section 4b, Special Conditions of the PO.

5 Fabrication

5.1 General

5.1.1 Fabrication of the thermal catalytic oxidizer/reducer units shall be in accordance with the requirements of 24590-WTP-3PS-MV00-T0001, *Engineering Specification for Pressure Vessel Design and Fabrication.*

5.1.2 Fabrication of piping shall meet the requirements of the Buyer specification 24590-WTP-3PS-NWP0-T0001 *Engineering Specification for General and NDE Requirements for Supplier Fabricated Piping*, Attachment PS02 *Engineering Specification for Shop Fabrication of Piping*, and ASME B31.3.

5.1.3 All stainless steel metal working, grinding, cutting, machining and welding shall use tools and consumables dedicated and segregated from all others to prevent cross contamination. A dedicated work area for tools, equipment storage, parts storage and raw materials must be established to control contamination. Welding consumables for stainless steel welding must be segregated from other consumables.

5.1.4 Ammonia gas pipe line connections

- To minimize ammonia gas leaks inside the LAW facility, socket weld and or butt weld fittings and components are preferred, followed by flanged connections. Hy-Lok valves and tubing are acceptable for instrument connections. Threaded connections 1/2 inch and smaller are acceptable, but should be minimized.
- Thread Sealant Tape- Anti-Seize technology, Inc., Item Number 46230, POLYTEMP HD Extra Heavy Duty PTFE tape or engineering approved equal, 1/2 inch wide, 0.0032 inches thick, density 1.2 - 1.5 g/cc, MIL-T-27730A.

5.2 Welding

5.2.1 Design and fabrication of the TCO pressure boundary shall be in accordance with specification 24590-WTP-3PS-MV00-T0001, *Engineering Specification for Pressure Vessel Design and Fabrication*

5.2.2 Welding of the TCO pressure boundary shall be in accordance with specification 24590-WTP-3PS-MVB2-T0001, *Engineering Specification for Welding of Pressure Vessels, Heat Exchangers and Boilers.*

5.2.3 Fabrication of TCO piping shall be in accordance with Attachment PS02 *Engineering Specification for Shop Fabrication of Piping.*

5.2.4 Welding and NDE of TCO piping shall be in accordance with specification 24590-WTP-3PS-NWP0-T0001, *Engineering Specification for General Welding and NDE Requirements for Supplier Fabricated Piping.*

5.2.5 Welding of carbon structural steel shall be in accordance with AWS D1.1 and specification 24590-WTP-3PS-SS00-T0001, *Engineering Specification for Welding of Structural Carbon Steel.*

5.2.6 Welding of structural stainless steel shall be in accordance with AWS D1.6 and BUYER specification 24590-WTP-3PS-SS00-T0002, *Engineering Specification for Welding of Structural Stainless Steel and Welding of Structural Carbon Steel to Structural Stainless Steel.*

5.3 Coating

5.3.1 Shop coating shall be in accordance with Attachment AFPS *Engineering Specification for Shop Applied Special Protective Coatings for Steel Items and Equipment,* Appendix D, Number 8.20, System Code D.

5.3.2 A manufacturer's coating data sheet (see Attachment AFPS *Engineering Specification for Shop Applied Special Protective Coatings for Steel Items and Equipment*, Section 6.2.1.2) is required for each commercial off the shelf (COTS) item or component that is supplied with a manufacturer's standard coating.

5.3.3 The top coat shall be ANSI 70 grey in color.

5.3.4 Attachment AFPS *Engineering Specification for Shop Applied Special Protective Coatings for Steel Items and Equipment*, does not apply to non-permanent plant equipment.

5.4 Assembly

5.4.1 The Thermal Catalytic Oxidizer/Reducer and the associated Ammonia/Air Dilution unit shall have edges that are both smooth and not sharp to the touch.

6 Tests and Inspections

6.1 General

6.1.1 The Completion Supplier shall provide all instruments, cables, and facilities necessary to perform any shop tests, the Functional Tests (FT) and NDE.

6.1.2 In addition to the pressure tests required by the Boiler and Pressure Vessel Code and piping code, the Completion Supplier shall functionally test the TCO. The Completion Supplier shall provide test hardware. Test hardware is expected to include, but is not limited to:

fan/exhauster/ blower, pre heater, piping, ducting, instrument tubing, power, controls and temporary insulation. The functional test shall include a fan/exhauster/blower that provides enough flow to bring the TCO up to or near the design temperature (without damage to the heating elements due to low flow). The functional test flow rate is expected to be between (2,000 scfm and 3,000 scfm). During the functional test the TCO will be brought up to temperatures that approach the operating temperature of the unit. The expected test temperature measured after heater LVP-HTR-00002 will be in the range of 600 to 700 F. This temperature range is subject to change as test details are developed. Air will be used during the test; no chemicals or test gases will be injected into the gas stream. The SCO and SCR catalyst modules will be installed during the test. The major test objectives are: verify heater operation using control panel LVP-PNL-00003, after unit cool down verify the SCO and SCR catalyst modules can be removed and reinstalled. Verify by visual observation the catalyst racks and catalyst gaskets are not distorted after being subjected to elevated temperatures.

6.1.3 In addition to the pressure tests required by the piping code, the Completion Supplier shall functionally test the LAW ammonia / air dilution skid. The Completion Supplier shall provide the necessary test hardware to run the ammonia /air dilution fans LVP-FAN-00001and 00002 on skid LVP-SKID-00003. Test hardware is expected to include, but is not limited to: a compressed air source, instrument tubing, power and controls. The Ammonia /air dilution skid does not have to be connected to the TCO for the functional testing. Ammonia gas will not be required for testing. Air at 15 psig will be used to simulate the ammonia gas during testing. The major test objectives are: verify fan operation and control using panel LVP-PNL-00003, verify valves open and close, verify flow meter operation.

6.1.4 The following section only applies to rectangular flanges or proto type testing. The LAW TCO is located in the offgas system near the LAW exhausters that generate the entire system vacuum. The LAW TCO rectangular flanges are normally under fairly high negative pressure and high operating temperatures. Rectangular flanges that allow excess air to leak into the offgas system during normal operations are not acceptable. The Completion Supplier shall test a mockup of the rectangular flange design to prove the design works at ambient temperature. Holding pressure at ambient temperature provides confidence that the flange design will perform as designed at elevated temperatures and pressure. The rectangular flange design shall be proved by testing as early as possible to minimize schedule delays.

The Completion Supplier shall select the appropriate test or tests. For example; a Bubble Test in accordance with ASME B & PVC, Section V, Article 10, Appendix I- Bubble Test, may be conducted at 2 psi to check for gross leaks. The bubble test could be followed by a negative pressure test. These tests shall be performed well ahead of the Functional Test (FT) to be of any benefit to the project. A complete mock up test assemble can be fabricated from new material or GFE material available for this fabrication. The objective of this test is to confirm the flange design including fasteners and gaskets will perform as designed at system negative pressure with some margin.

The flange / proto type test(s) are designed to confirm the flange design and mitigate risk. Submittal of test procedures for this section is optional, since similar test procedures will be submitted when the FT is conducted.

6.2 Personnel Qualifications

NDE personnel performing NDE shall work in accordance with the following the Buyer specifications:

- 24590-WTP-3PS-MV00-T0001, *Engineering Specification for Pressure Vessel Design and Fabrication*
- 24590-WTP-3PS-MVB2-T0001, *Engineering Specification for Welding of Pressure Vessels, Heat Exchangers and Boilers*
- 24590-WTP-3PS-SS00-T0001, *Engineering Specification for Welding of Structural Carbon Steel*
- 24590-WTP-3PS-SS00-T0002, *Engineering Specification for Welding of Structural Stainless Steel and Welding of Structural Carbon Steel to Structural Stainless Steel*
- 24590-WTP-3PS-NWP0-T0001, *Engineering Specification for General Welding and NDE Requirements for Supplier Fabricated Piping*
- Attachment PS02 *Shop Fabrication of Piping*

6.3 Non-Destructive Examinations

6.3.1 NDE shall be performed in accordance with the following the Buyer specifications:

- 24590-WTP-3PS-MV00-T0001, *Engineering Specification for Pressure Vessel Design and Fabrication*
- 24590-WTP-3PS-MVB2-T0001, *Engineering Specification for Welding of Pressure Vessels, Heat Exchangers and Boilers*
- 24590-WTP-3PS-SS00-T0001, *Engineering Specification for the Welding of Structural Carbon Steel*
- 24590-WTP-3PS-SS00-T0002, *Engineering Specification for Welding of Structural Stainless Steel and Welding of Structural Carbon Steel to Structural Stainless Steel*
- 24590-WTP-3PS-NWP0-T0001, *Engineering Specification for General Welding and NDE Requirements for Supplier Fabricated Piping*
- Attachment PS02 *Shop Fabrication of Piping*

6.3.2 NDE procedures shall be submitted to the Buyer for review and approval prior to use.

6.3.3 Submittal of exposed radiographs is required. Original set of exposed radiographic film must be sent, along with technique and reader sheets. Film must be packaged in such a manner as to preclude moisture and handling damage.

6.4 Shop Tests

6.4.1 Pre-Functional Test

6.4.1.1 The Completion Supplier shall perform instrument testing, inspection and calibration required to verify compliance with this specification. When requested, procedures and reports provided for records shall be submitted for the Buyer's review in accordance with Part 2 of the material requisition, Forms G321-E of the material requisition to which this specification is attached.

6.4.1.2 The Buyer's Supplier Quality (SQ) and an engineering representative shall witness the Completion Supplier's functional tests.

6.4.2 Instrumentation and controls that contain solid state components shall be subjected to burn-in as required. Burn-in duration shall be 72 hours minimum. The Completion Supplier shall provide the Buyer with 10 business day's notification to allow the Buyer to witness the test.

6.4.3 All wiring provided by the Completion Supplier shall be verified 100% with a point to point continuity test. Wiring errors that are detected shall be corrected, including drawings, prior to the Buyer's inspection.

6.4.4 Software functional testing shall be governed by 24590-WTP-3PS-JQ00-T0004, *Engineering Specification for Management of Supplier Software.*

6.4.5 A simulated signal shall be injected and varied over the full range for each devise in the instrumentation and control circuits. Each device shall be calibrated and checked for correct operation by simulating inputs, actuating switches, and monitoring outputs, indicating lights, etc.

6.4.6 Failure to perform such tests or failure of any part shall be cause for rejection of part or all of the system components.

6.4.7 The Completion Supplier's shop tests shall include the following:

a. Megger test before termination of all 480V wiring pulled into conduit. See Part 2, Attachment SQ of the MR for Witness and Hold Points schedule. Record on the FT.

b. Continuity check of all wiring for conformance with drawings. See Part 2, Attachment SQ of the MR for Witness and Hold Points schedule. Record on the FT.

6.4.8 Prior to notification by the Completion Supplier that a unit is ready for the Buyer to witness the Functional Test portion of the FT, the Completion Supplier shall perform all other FT mechanical and electrical inspections to ensure completed equipment is functioning and ready for the Functional Test. See Part 2, Attachment SQ of the MR for Witness and Hold Points schedule.

6.4.9 The Completion Supplier shall have the unit up and ready for Functional Testing prior to the Buyer's team arriving.

6.4.10 The Completion Supplier shall submit the Functional Test Procedure for the Buyer to review prior to use by the supplier.

6.4.11 The Completion Supplier shall submit a report of the FT results.

6.4.12 The Functional Test Procedures shall be prepared by the Completion Supplier in accordance with Attachment JQ07, Section 11.3.2.

6.4.13 The following is a list of preliminary Buyer expectations for the TCO Functional Test. This list is subject to change during review of the proposed test procedure. All results shall be recorded on the FT datasheet.

a. The TCO is completely assembled for the following tests:

i. Pressure testing shall be performed in accordance with required testing specified in ASME B31.3-1996 or ASME Section VIII, Division 1, as applicable. In addition to these code required pressure tests, additional testing shall be performed to further demonstrate the pressure boundary integrity of the equipment.

ii. Sensitive Leak Testing shall be performed on piping in accordance with ASME B31.3, Section 345.8, as required.

iii. Bubble Testing shall be performed in accordance with ASME Section 5, Article 10, as required.

iv. Obtain unit pressure drop measurements at ambient conditions and at heat up intervals. Record on FT datasheet.

v. Deleted

vi. Preheat the incoming air prior to LVP-HTR-00002, to simulate the hot offgas from the melter, as required.

vii. Provide power and temporary controls for LVP-HTR-00002.

viii. Operate the TCO at test temperature for 24 hours. This time frame includes initial system heat up and time for the TCO to stabilize at operating temperature.

b. Test Objective

i. Verify the TCO heater, LVP-HTR-00002, provides the required heat to maintain temperature.

ii. Verify the JC 0510A loop controls LVP-HTR-00002 within the operating range.

iii. Verify the 2 Melter nominal flowrate of approximately 4702 ACFM (or as specified in the MDS) can be achieved. The flowrate provided here is for information only and subject to change. Refer to the MDS for the actual flowrate.

iv. Verify the actual differential pressure drop is less than the allowable differential pressure. Refer to the MDS for the actual pressure. Record on the FT datasheet.

v. Verify the TCO outlet temperature at TE-0524 is less than 486°F. The temperature provided here is for information and subject to change. Refer to the MDS for the actual temperature.

vi. Deleted

vii. Deleted

viii. Verify the unit pressure drop is within acceptable limits as stated in the Buyer approved FT. Record on the FT datasheet.

ix. Deleted

c. Deleted

d. After the TCO unit has cooled, verify no deformation or degradation to the housing and internal components has occurred.

e. Deleted

f. After the TCO has cooled, remove the SCO and SCR catalyst modules. Verify by visual observation if the catalyst racks and or catalyst gaskets have distorted during the functional test. Reinstall all of the catalyst to confirm the catalyst modules can be completely reloaded. If distortion was observed, repair / replace as required. If distortion was observed repeat the test after repairs / replacements are complete. Repeat test duration can be 8 hours or less. Record results on FT datasheet.

g. The Completion Supplier shall submit the catalyst installation and removal procedure.

h. Demonstrate heater removal and insertion. This step can be accomplished at any time, before or after the functional testing.

6.4.14 The following is a list of requirements for the Ammonia / Air Dilution Skid Functional Test. This test is subject to change by the Buyer during the review of the proposed test procedure. Changes to these expectations, agreed to during the review, do not need to be reflected in a revision to this specification. All results shall be recorded on the FT datasheet

a. The ammonia dilution skid is completely assembled. Control panel, LVP-PNL-00003 is complete and ready for testing.

   i. Pressure testing shall be performed in accordance with the required testing specified in ASME B31.3. In addition to these code required pressure tests, additional testing shall be performed to further demonstrate the pressure boundary integrity of the equipment.

   ii. Sensitive Leak Testing shall be performed on piping in accordance with ASME B31.3, Section 345.8, as required.

   iii. It is acceptable to use temporary air and controls to open and close valves on the skid.

b. The Completion Supplier shall provide the following air source:

   i. Not Used

   ii. Dry, oil and dust free Instrument Service Air (ISA) at 90-150 psig and with a dew point of -40°F at 100 psig based on ISA 7.0.01.

c. Test Objective

   i. Satisfactory results for 6.4.14a criterion as stated above.

   ii. Actuated valves are fully cycled a minimum of 3 times and flow instrument loops respond per the design.

   iii. Verify fan control using the control panel LVP-PNL-00003.

iv. Verify the fans produce the required flow and pressure.

6.4.15 The Completion Supplier provided lifting equipment, such as, but not limited to spreader beams, strong backs and yokes shall be tested in accordance with Section 9.4 of 24590-WTP-3PS-G000-T0003, *Engineering Specification for Packaging, Handling and Storage Requirements*. Engineering Specification, 24590-WTP-3PS-G000-T0003, only requires custom spreader beams, strong backs, and yokes when these items are not available from commercial sources.

6.4.16 All overhead lifting points shall be proof tested. Test and examination certificates / documentation shall be provided to the Buyer for review. Lifts shall be conducted in accordance with the Buyer reviewed handling procedure.

6.4.17 Deleted

6.4.18 After the proof tests, the lift points shall be inspected.

6.4.19 The welds on fabricated lifting lugs shall be dye penetrant tested. Acceptance criteria shall be from the prevailing weld design code or standard.

6.4.20 Lift points shall be inspected for visual permanent plastic deformation of the material that may invalidate the design analyses for the lift points.

6.4.21 Deleted

6.5 Site Tests

The Buyer startup personnel shall perform acceptance tests after initial installation to confirm the Thermal Catalytic Oxidizer/Reducer and the associated Ammonia/Air Dilution unit meets the performance requirements specified in Section 3.4 of this specification.

7 Preparation for Shipment

7.1 General

The Thermal Catalytic Oxidizer/Reducer, catalysts, assemblies and the associated Ammonia/Air Dilution units shall be packaged, handled, and stored in accordance with the Buyer specification 24590-WTP-3PS-G000-T0003, *Engineering Specification for Packaging, Handling, and Storage Requirements*.

7.2 Tagging

7.2.1 A stainless steel nameplate shall be attached in a visible location to the Thermal Catalytic Oxidizer/Reducer and Ammonia/Air Dilution unit showing the manufacturer's name, shop location, date of manufacture, serial number, equipment rating, equipment tag numbers, weight of assembly and purchase order number.

7.2.2 Electrical/Control panels shall be tagged with component identification numbers per Attachment JQ07, Section 3.6.8 and Section 8.

7.2.3 Mechanical subcomponents (valves, strainers, expansion/flex joints, etc.) shall have component identification number engraved on a 1/16" minimum thick stainless steel tag with ¼" minimum character height, securely attached with 1/16" minimum diameter aircraft cable and ferrules.

7.2.4 Component identification numbers shall be as shown on the Buyer's P&IDs or MDSs attached to the MR, or will be provided via the Buyer markup of the Completion Supplier submitted drawings.

7.3 Nameplates

7.3.1 Permanent nameplates or labels shall be provided to identify each meter, relay, control switch, indicating light, circuit breaker compartment, and to identify all devices and terminal blocks within the compartments.

7.3.2 Exterior nameplates shall be made of laminated, beveled plastic of manufacturer's standard, with black lettering or numbering on a white background and shall be permanently affixed on the exterior. The method of affixing shall not violate the NEMA rating of the enclosure. Chloride / halide testing is not required for glue used to attach name plates.

7.3.3 Interior labels for all devices, parts and components shall be machine printed, permanent and self-adhesive labels. Chloride / halide testing is not required for self-adhesive labels.

7.4 Indoor storage

7.4.1 All line items/equipment shall be packaged per LEVEL C storage requirements. Level C: Indoor Storage (ASME NQA-1 2000 Level C). Materials shall be stored within a fire-resistant, weather-tight, and well-ventilated building or equivalent enclosure. Precautions shall be taken against vandalism. This area shall be situated and constructed so that it shall not be subject to flooding; the floor shall be situated and constructed so that it shall not be subject to flooding; the floor shall be paved or equal and well drained. Items shall be placed on pallets or shoring to permit air circulation.

8 Quality Assurance

8.1 General Requirements

This section does not delete or revise (but is in addition to) those requirements defined by the procurement documents. If a supplier believes that an inconsistency exists between this section and the procurement documents and referenced codes and standards, the Completion Supplier shall immediately notify the Buyer requesting resolution.

8.1.1 The Completion Supplier is responsible to promulgate the requirements of this specification to sub-suppliers providing items or services related to this procurement.

8.1.2 The Completion Supplier's QAP Requirements are included in the Buyer's specification 24590-WTP-3PS-G000-T0001, *Engineering Specification for Supplier Quality Assurance Program Requirements*.

8.1.3 The Completion Supplier's Quality Assurance Manual Document Number 40-001, Rev 4, dated 3/13/13 shall be submitted to the Buyer for review. All work shall be performed in accordance with their QL-3 program and QL-3 implementing procedures. A Commercial Grade Survey was performed at the Completion Supplier's facility October 7, 2013 in order to observe and record the process and controls to their QL-3 program. If at some time during this procurement the Completion Supplier revises their Quality Assurance Manual or implementing procedures, WTP procurement Engineering shall be notified immediately in order to assess the changes and determine the impact, if any, to the dedication of the LAW TCO and Ammonia Dilution skid (ADS).

8.1.4 For items designated quality level commercial (CM), no additional QA program requirements are mandated by the Buyer beyond the Completion Supplier's commercial QA program.

8.2 Quality Program Requirements

8.2.1 Deleted

8.2.2 The Completion Supplier must pass a survey by the Buyer.

8.2.3 The Completion Supplier shall allow the Buyer, its agent, and DOE access to their facility and records pertaining to this purchase order for the purpose of Quality Assurance Audits and Surveillance at mutually agreed times.

8.2.4 Deleted

8.3 Supplier Deviation

Each supplier shall be required to identify and promptly document all deviations from the requirements of the procuring documents. In addition, the supplier shall be required to describe the recommended disposition for the Buyer's acceptance based on appropriate analysis. Submittals of request for deviations from lower-tier suppliers shall be through the prime supplier to the Buyer. The supplier-proposed deviations from procurement documents shall be initiated by use of Supplier Deviation Disposition Request (SDDR) form in Part 2 of the MR.

9 Configuration Management

Equipment and/or components covered by this specification are identified with plant item numbers shown in the MDSs. Each item shall be identified in accordance with Tagging in Section 7.2 of this specification.

10 Documentation and Submittals

10.1 General

The Completion Supplier shall submit to the Buyer Engineering and Quality Verification documents in the forms and quantities shown in Form G-321-E, *Engineering Document Requirement*, and Form G-321-V, *Quality Verification Document Requirements*, attached to the MR.

WTP specifications contain many submittal requirements. WTP does not require every submittal listed to be submitted. The required submittals are listed on the G-321-E and G-321-V forms.

10.2 Submittals

The Completion Supplier shall submit the following:

10.2.1 Drawings

Drawings shall be in accordance with ASME Y14.100 and show the following information:

10.2.1.1 The outline dimensions of each Thermal Catalytic Oxidizer/Reducer and Ammonia/Air Dilution units, including outline and detail drawings for each component. These drawings shall reflect the "as-shipped" configuration of the equipment and instrumentation.

10.2.1.2 Details of construction.

10.2.1.3 Mounting dimensions and information required for the design of supports and foundations.

10.2.1.4 Operating weight and center of gravity of each Thermal Catalytic Oxidizer/Reducer and Ammonia/Air Dilution unit.

10.2.1.5 The space required for the removal of components.

10.2.1.6 The location of access doors.

10.2.1.7 Deleted

10.2.1.8 Wiring and schematic diagrams. Diagrams shall include wire gauges and fuse sizes applicable to the supplied units only.

10.2.1.9 Deleted

10.2.1.10 Nozzle locations for connections to BUYER's process and utility piping including electrical and instrumentation connections.

10.2.1.11 Piping and instrumentation diagrams (P&IDs).

10.2.2 Procedures

Procedures shall include but are not limited to:

10.2.2.1 Completion Supplier's shipping preparation and storage procedures.

10.2.2.2 Startup, operation, shutdown, and idle procedures/manual.

10.2.2.3 Catalyst change out procedures.

10.2.2.4 Performance test procedures and acceptance criteria for shop tests.

10.2.2.5 Insulation installation procedures, for removable insulation.

10.2.2.6 Surface preparation and coating procedures for components specifically fabricated for the TCOs/SCRs.

10.2.2.7 Inspection and Test Reports

10.2.2.8 Performance test reports for shop tests.

10.2.2.9 Deleted

10.2.3 Deleted

10.2.3.1 Deleted

10.2.3.2 Deleted

10.2.4 Manuals

Manuals and instructions shall include:

10.2.4.1 Erection and installation manuals which provide complete, detailed procedures for installing and placing equipment in initial operation. The manuals shall include all erection and installation drawings. Refer to the Buyer specification 24590-WTP-3PS-G000-T0003 *Engineering Specification for Packaging, Handling and Storage Requirements*, for additional requirements.

10.2.4.2 Operation, accessibility, and maintenance manuals which provide complete, detailed descriptions of components and appurtenances with data sheets showing design, construction and performance data for equipment. Manuals shall include drawings required for operation,

maintenance and repair, maintenance requirements, instructions and operational troubleshooting guides.

10.2.4.3 Instruction manuals shall cover items purchased, including materials that the Completion Supplier has obtained from a subcontractor. The supplier shall obtain such manuals and lists, and submit them to the Buyer.

10.2.4.4 The Completion Supplier shall provide instructions regarding transportation, site storage and preparation, and protection of equipment after installation and prior to operation. Refer to the Buyer's specification 24590-WTP-3PS-G000-T0003, *Engineering Specification for Packaging, Handling and Storage Requirements*, for additional requirements.

10.2.5 Certificates of Conformance and Acceptance, as specified on the G-321-V form.

10.2.5.1 The Completion Supplier shall provide Certificates of Conformance demonstrating compliance with all applicable standards, specifications, and drawings. See Attachment 11 for a sample Certificate of Conformance.

10.2.5.2 The Completion Supplier shall certify lifting eyes or lugs and/or spreader bars are suitable for the safe, lifting, and handling of the equipment.

10.2.5.3 Attachment 7 provides the Certificate of Analysis (COA) for BASF Catalysts, LLC (VOCat 300S) used in Catholic University's Vitreous State Laboratory (VSL) testing. Prior to release for shipment the Completion Supplier shall provide the COA demonstrating the performance of the oxidation catalyst is equal to or better than the oxidation catalyst used in the reference VSL testing (Ref. MDS General Note 9) for the Buyer's acceptance.

10.2.6 Deleted

10.2.6.1 Deleted

10.2.6.2 Parts list, and cost for parts and items subject to deterioration and replacement.

10.2.6.3 List of recommended spare parts. The spare parts list shall include names of the original equipment manufacturer with appropriate part numbers.

10.2.7 Materials Certificates/Statistics

10.2.7.1 Deleted

10.2.7.2 Material Test Reports (MTRs), as specified on the G-321-V form. CMTRs, MTRs, C of Cs, etc. Are not required for non-permanent plant equipment.

10.2.7.3 Deleted

10.2.7.4 Deleted

10.2.7.5 Deleted

10.2.7.6 Material Safety Data Sheets (MSDSs).

10.2.8 Data

Data shall include:

10.2.8.1 The Buyer's Mechanical Data Sheets, completely filled out by the supplier, showing all information required to determine that the units are of the design and materials specified herein.

10.2.8.2 All data compiled during FT testing transmitted in a final report based on the Buyer's approved FT procedure/results/datasheet.

11 References

Design changes incorporated by reference:

24590-WTP-SDDR-MS-11-00054

24590-WTP-SDDR-MS-11-00200

24590-WTP-SDDR-MS-11-00298

24590-WTP-SDDR-MS-12-00094

24590-WTP-SDDR-MS-12-00110

24590-WTP-SDDR-MS-12-00167

24590-WTP-SDDR-MS-12-00173

24590-WTP-SDDR-MS-13-00001

24590-WTP-SDDR-MS-13-00006

24590-WTP-SDDR-MS-13-00023

24590-WTP-SDDR-MS-13-00074

24590-WTP-SDDR-MS-14-00002

24590-WTP-SDDR-MS-14-00003

24590-WTP-SDDR-MS-14-00004

24590-WTP-SDDR-MS-14-00042

24590-WTP-SDDR-MS-14-00048

24590-WTP-SDDR-MS-14-00049

24590-WTP-SDDR-MS-14-00050

24590-WTP-SDDR-MS-14-00061

24590-WTP-SDDR-MS-14-00062

24590-WTP-SDDR-MS-14-00064, superseded by 24590-WTP-SDDR-MS-15-00010

24590-WTP-SDDR-MS-14-00066

24590-WTP-SDDR-MS-14-00068

24590-WTP-SDDR-MS-14-00076

24590-WTP-SDDR-MS-15-00010

24590-WTP-SDDR-MS-15-00012

24590-WTP-SDDR-MS-15-00017

24590-WTP-SDDR-MS-15-00019

24590-WTP-SDDR-MS-15-00023

24590-WTP-SDDR-MS-15-00028

24590-WTP-SDDR-MS-15-00029

24590-WTP-SDDR-MS-15-00030

24590-WTP-SDDR-MS-15-00031

24590-WTP-SDDR-MS-15-00040

24590-WTP-SDDR-MS-15-00041

24590-WTP-SDDR-MS-15-00049, superseded by 24590-WTP-SDDR-MS-15-00057

24590-WTP-SDDR-MS-15-00050, superseded by 24590-WTP-SDDR-MS-15-00060

24590-WTP-SDDR-MS-15-00051

24590-WTP-SDDR-MS-15-00052

24590-WTP-SDDR-MS-15-00056

24590-WTP-SDDR-MS-15-00057

24590-WTP-SDDR-MS-15-00060

24590-WTP-SDDR-MS-15-00063

24590-WTP-SDDR-MS-15-00072

24590-WTP-SDDR-MS-15-00073

24590-WTP-SDDR-MS-16-00001

24590-WTP-SDDR-MS-16-00004

24590-WTP-SDDR-MS-16-00009

24590-WTP-SDDR-MS-16-00014

24590-WTP-SDDR-MS-16-00015

ATTACHMENT JQ07

LAW TCO CUSTOMIZED JQ07

24590-WTP-3PS-JQ07-T0001, Rev. 3, **SCN's 24590-WTP-3PN-JQ07-00015 & 00016 as applicable**
ENGINEERING SPECIFICATION FOR INSTRUMENTATION FOR PACKAGED SYSTEMS

This attachment defines the requirements for instruments, control devices, and control systems associated with the Low Activity Waste Thermal Catalytic Oxidizer/Reducer (LAW TCO). For continuity and maintaining configuration control, the section numbers from the specification noted above have been retained.

1.7 Work by Others

1.7.1 External Connections

All external connections of wiring and piping between the Supplier provided instruments and the Buyer's utilities are excluded unless specified in the RFP or otherwise agreed to by the Buyer and Supplier.

1.7.2 Instrument and Service Air

The Buyer will provide the following air sources for instruments and equipment:

Dry, oil and dust-free instrument air, 90 to 150 psig, with a dew point value of - 40 °F at 100 psig based on ISA 7.0.01. Service air, dew point –32 °F, 90 to 150 psig.

1.7.3 Power Supply

The Buyer will provide normal power and/or Uninterruptible Power Supply (UPS) for the Supplier's instruments unless otherwise specified on the parent specification. Each source will be delivered at 120 VAC, single phase, 60 Hz, grounded system. 480 VAC, 3 phase, 60 Hz power will be provided as required for motors. All other voltages required by the Supplier shall be derived from the Buyer provided 120 VAC or 480 VAC.

2.1 Codes

2.1.1 American Society of Mechanical Engineers (ASME)

ASME B31.3 (1996)	Process Piping
ASME/ANSI PTC 19.3	Performance Test Code for Temperature Measurement

2.2 Industry Standards

2.2.3 Telecommunications Industry Association / Electronic Industries Alliance (TIA/EIA)

TIA/EIA-232-F	Interface Between Data Terminal Equipment and Data Circuit-terminating Equipment Employing Serial Binary Data Interchange

TIA/EIA-485-A	Electrical Characteristics of Generators and Receivers for Use in Balanced Digital Multipoint Systems

2.2.4 Instrumentation, Systems, and Automation Society (ISA)

50.02, Part 2,3,4,5&6	Fieldbus Standard for Use in Industrial Control Systems Part 2 (1992), 3 (1997), 4 (1997), 5 (1998), 6 (1998)
S75.01	Flow Equations for Sizing Control Valves
S84.01 (1996)	Applications of Safety Instrumented Systems for the Process Industries

2.2.6 International Electrotechnical Commission (IEC)

IEC 60751	Industrial Platinum Resistance Thermometer Sensors
IEC 61508-2/3	Functional Safety of Electrical/Electronic/Programmable Electronic Safety-Related Systems

2.2.7 National Electrical Manufacturers Association (NEMA)

NEMA ICS 6	Enclosures for Industrial Controls and Systems

2.2.9 WTP Project Specifications

24590-WTP-3PS-JQ00-T0004	Management of Supplier Software

3.3 Design Conditions

3.3.1 Units of Measurement

The following units shall be used for design parameters, calculations, and scales.

Positive gauge pressure	inches H_2O or psig
Vacuum	inches Hg Vac or H_2O Vac
Absolute pressure	inches Hg or psia
Differential pressure	inches H_2O or psi
Temperature	degrees F
Flow: Solids	lb/hr
Flow: Liquids and slurries	gal/min or lb/hr
Flow: Gases or Vapors	std ft^3/min (scfm), std ft^3/hr (scfh) or lb/hr
Flow: Steam or vapors	lb/hr
Level	inches, feet or %
Composition	%, Wt. Fraction or PPM
Density	lb/ft^3
Velocity	feet/second
Viscosity	centipoise (cP)
Current (Electrical)	ampere
Electrical Potential	volt
Resistance	ohm
Conductivity	micro-siemens (μS) per centimeter

3.3.2 Interlock and Alarm Requirements

Packaged systems shall be provided with a Common trouble (if specified) alarm, an Emergency shutdown alarm, and a Safety instrumented system (if specified) alarm to annunciate in the Buyer's control room. In addition, the following control requirements shall also be met:

- Field contacts shall open in the alarm condition
- Field contacts shall open to initiate shutdown
- Instruments and interlock systems shall be designed to be fail safe

3.3.3 Spare Capacity

The Supplier shall provide 25 percent spare intermediate terminal blocks and space for an additional 15 percent increase in terminal blocks.

3.3.4 Instrument Signal/Power Circuit Protection

Instrument circuits shall be protected and housed to meet the electrical area classification in which it is installed. The choices of housing shall satisfy all pertaining codes.

Intrinsically safe instrument systems should not be used, unless there are special site requirements, and then only with the Buyer's approval. Intrinsically safe system requires certification by Underwriters Laboratory (UL) or Factory Mutual (FM) Insurance Company.

Each PLC or controller discrete output signal shall have its own independent fuse. Fuses shall be located in the leg of the wiring scheme that provides power from the source to the field devices.

3.3.6 Local Control Panel Instrumentation Indicators

Local motor controls (i.e. single local/remote switch per equipment control panel, momentary forward/reverse for each motor) shall be provided on control panel for operating equipment in local mode. Local mode will allow control to be taken away from the control system. Operations will be performed from the control panel and will not be subject to ICN interlocks. Independent protection interlocks will remain in force to prevent damage to Supplier's equipment. Indicating lights for local control panels which include indications, status, and alarms from instruments and motor drives shall conform to the following requirements for indicating lights for status, alarms, information, or control:

Color	Meaning
Red	Stopped, Closed, OFF, Alarm
Green	Running, Opened, On
Yellow	Transition, Indeterminate, Force
Cyan (Light Blue)	Manual
Purple	Local Control (HMI Displays)
Clear	Local Control (Local Panels)

NOTE 1: Switches or control effectors shall be turned clockwise or moved upward to increase function or energize a device. For single switch multi-direction control a 3 position switch with center position spring return is recommended (i.e. Forward/Reversing Motors, etc.)

NOTE 2: Applicable standards and guidelines direct consistency of man-machine interface features in order to minimize operator errors. All control panels that are used for normal process operation should feature color-coding and display features that are consistent with the color scheme as defined in section 3.3.6 above. The color scheme applies to vendor packaged control indications as well as any

SELLER developed human machine interface screens. However, for control and indication panels that are intended for maintenance operation only, or that are not used for routine operator control, deviations from the color scheme listed above may be approved at the Buyer's discretion.

3.3.7 Push to Test Alarm Actuator

All alarm indicators (visual) and annunciators (audible), and all lights on Control Panels (ref 3.3.6) shall be activated with an integral momentary contact push to test feature or when a common momentary contact push to test button on the front of the panel is pressed. This function is provided to verify that the alarm and/or indication functions satisfactorily.

3.4 Controls and Instrumentation Requirements

3.4.1 General

It is the intention of this specification that the instrumentation and designated portions of the control system be designed, fabricated, and installed as far as it is practical to the Supplier's design offering. However, the Buyer will select specific manufacturers for purposes of quality and standardization of the instrumentation and control system throughout the WTP facility.

3.4.2 Controls

Control software provided by the Supplier shall be governed by 24590-WTP-3PS-JQ00-T0004.

3.4.2.1 WTP Integrated Control Network (ICN) Architecture

The Buyer has selected the Industrial^{IT} product line supplied by ABB Automation Inc. as the primary control system for the WTP facility. The selected platform is a highly versatile "hybrid" type system which is designed to implement the traditional Distributed Control System (DCS) applications as well as the traditional Programmable Logic controller (PLC) applications. For the purpose of standardization and maintainability, it is a requirement to utilize components from this manufacturer to the extent possible with packaged systems.

Packaged systems shall be integrated into the WTP ICN, the following options are available, listed in order of preference:

3.4.2.1.1 ICN Control Platform

This is the Buyer's preferred implementation method.

When the packaged system implements the ICN control platform it shall utilize the Buyer's selected manufacturer's control system hardware. This includes the processors, input/output modules, power supplies, communications hardware, etc. to be installed in the Supplier's supplied control cabinets. Dependent on the operational requirements of the package this could also include connectivity server equipment and operator interfaces.

The Buyer selected manufacturer's product line is a follows:

Description/Manufacturer	ABB
Controller Platform	AC800M
Input/Output Module Platform	S800
Software Development Environment	Control^{IT} for AC800M/C
Operate Environment	Operate^{IT}

All ABB hardware shall be procured by the Buyer on behalf of the Supplier for applications provided the agreement was made prior to the contract award.

Preliminary design for controls implementation shall be submitted for the Buyer approval prior to the detailed design effort.

3.4.2.1.2 Commercial-Off-The-Shelf (COTS) Controls

Procured packaged systems considered as COTS are acceptable for integration into the ICN systems. For this determination, COTS controls are control hardware/software which do not require customization or design engineering for use on WTP. The Supplier shall supply the interface to the ICN using ICN supported communication hardware as follows:

Package Description		Interface	Media
Status Only – No control via ICN	Limited data exchange – Preferred	Profibus DP®	Multimode Fiber Optic
	Limited data exchange – Alternate*	4-20 mA - AI/AO	Hardwired
		24 VDC - DI	
		Dry contact – DO	
	Significant data exchange	OPC over Ethernet	Fiber Optic
Control via ICN	Preferred	Redundant Profibus DP®	Multimode Fiber Optic
	Alternate*	4-20 mA - AI/AO	Hardwired
		24 VDC - DI	
		Dry contact – DO	

* Buyer approval is required for substitution of these or other alternative interfaces. AI- Analog Input, AO- Analog Output, DI- Digital Input, DO- Digital Output.

3.4.2.1.3 Third Party Platform

If utilization of the Buyer's selected controls manufacturer is determined to be unfeasible, a third-party control platform can be utilized with the Buyer's concurrence. Unless otherwise stated, application software development will be by the Supplier. The interface of the third party platform to the ICN shall be per table shown in the above paragraph 3.4.2.1.2.

Preliminary design for controls implementation on the third-party platform shall be submitted for the Buyer's review prior to the detailed design effort.

3.4.2.2 WTP Integration

3.4.2.2.1 Interface Data Requirements

Where the application software is provided by the Supplier, the Supplier shall provide a complete listing and detailed description of data points available for integration into the Buyer's ICN for operational, maintenance, and archiving purposes. All required control points required for the appropriate level of ICN control shall be clearly identified. The list shall be submitted to the Buyer for review and mutual concurrence. The final submission listing shall include all applicable interfacing details (entity names, addressing, etc.).

Where the application software is provided by the Buyer, refer to paragraph 3.5 for software design documentation requirements.

3.4.2.2.2 Interface Integration Testing

The Supplier shall provide proposed Profibus DP®, Foundation® Fieldbus, protocol converters, and interface devices immediately after the 90% design review. This will facilitate testing at the Buyer's facility in Richland, WA. Previously tested devices by Buyer will not need to be supplied at this time.

3.4.3 Non-Safety Signal Transmission Interface

The Buyer is striving for a consistent implementation of the connection of field instrumentation and equipment to control systems throughout the WTP facility.

Preliminary design for connection of field instrumentation and equipment to control systems shall be submitted for Buyer review prior to the detailed design effort.

The Supplier shall organize circuits and circuit terminations in the Supplier's interfacing termination enclosures based on signal types or circuit configurations. These signal types will include AI, AO, DI, DO, serial, Profibus DP, Foundation® Fieldbus, etc., and should be further grouped by 2- wire, 3-wire, or 4-wire circuit configurations. Based on quantities of these types, cable requirements can be established early. Subsequent to the contract award, C&I will work with the Supplier to "assign" signals to specific circuits and I/O channels as soon as possible.

The Supplier shall apply the following process when determining connection type:

3.4.3.1 Foundation® Fieldbus

Where available, process instrumentation shall be Foundation® Fieldbus compliant. Foundation® Fieldbus interfaces to communicate directly with Fieldbus enabled instruments and equipment. All Foundation® Fieldbus devices supplied shall be registered with the Foundation® Fieldbus, compliant with the current version of the Interoperability Test kit at the date of the purchase order, and supplied with manufacturer developed Device Description files. Only the Buyer-approved Interfacing devices shall be used to convert signals from their standard format to the Foundation® Fieldbus protocol. These devices shall be supplied by the Supplier and used only when a native Foundation® Fieldbus device is not available. The same communication, testing, and registration requirements apply to Fieldbus converters as to native Fieldbus devices.

3.4.3.1.1 Foundation® Fieldbus Accessories

All FOUNDATION Fieldbus devices shall be pre-wired with Pepperl + Fuchs (P+F) connector V9-R-M2-S.

3.4.3.1.2 Software Validation and Documentation

The Supplier shall provide Device Description (DD) files with every Purchase Order data sheet release. Device Description (DD) files shall be the manufacturer developed files and submitted in their native electronic form for each firmware version in the order.

The Supplier shall provide a list relating tag numbers to firmware versions and DD files, such as a MS Excel spreadsheet file.

The Supplier shall include manuals that describe how to configure the Foundation® Fieldbus parameters for the device.

If the Supplier changed any Buyer configurable parameters from their default state, these setting shall be documented on a per tag basis.

If the factory calibration settings are available and modifiable by the user, the Supplier shall document the settings and provide the settings along with the calibration certificate for each device.

The Buyer's control system can manage all parameters that are accessible though the Foundation® Fieldbus interface. However, if the Buyer is required to set any additional parameters that are available only though an alternate interface such as FDT/DTM, the Supplier shall provide the necessary hardware (cabling / hand held units) and software, including licenses, to interface with the device.

3.4.3.2 Profibus DP®

Communication interfaces to intelligent mechanical handling and electrical equipment shall be Profibus DP® compliant. Profibus DP® communication link shall be used to interface controllers directly with devices such as "intelligent" motor control centers (MCCs) and variable frequency drives (VFDs). All Profibus DP® devices shall be supplied with. GSD files and documentation describing data interchange. Other interfaces, such as DeviceNet®, AS-Interface®, TIA/EIA-232/485, etc. may be utilized with the appropriate converters with the Buyer's approval. The Supplier supplied conversion modules will be used where required. When Profibus DP® is the communications link between the Buyer's control system and the Supplier's control cabinets the following shall apply:

3.4.3.3 Communication Network Interface

The Buyer has selected the Industrial[IT] platform from ABB, Inc. as the primary control system for the Buyer's facility. A Profibus DP® communication network will be used to communicate to drives and intelligent positioning instruments. The Supplier shall provide the following components for a Fiber Optic cable interface:

3.4.3.3.1 Profibus DP® Communication Interface

The Supplier shall provide a native Profibus DP® slave interface for the control panel or instrument and the associated drivers (GSD files) for communication with the Buyer's control system. The interface should support communication speeds up to 12 Mbit/sec over the Profibus DP® network.

3.4.3.3.2 Fiber Optic Connections

The Supplier shall provide the following component for proper network communication:

a) The Supplier shall install a Hirschmann OZD Profi 12M G12 fiber optic converter within the control panel or near the instrument for each communication network.

b) The Supplier shall derive the appropriate power to the fiber optic converter(s) from the control panel power feed. Where the Buyer provided a 120V single phase UPS supply, this supply shall be used to derive the 24VDC supply for the fiber optic converter. Where the only supply available from the Buyer is 480V 3Φ, then the Supplier shall use this to derive the 24VDC supply for the fiber optic converter. A separate power supply shall be provided for each communication network.

c) The Supplier shall follow the general fiber optic requirements described in section 3.4.3.5

3.4.3.3.3 Alternate Communication Interface

If a native Profibus DP® interface is not available, then the Supplier may propose an alternate communication interface or network that is compatible with the Buyer's control system for the Buyer's consideration and approval. If an alternate communication interface is proposed:

a) The Supplier shall provide all necessary interfaces or converters required to provide the Buyer's control system with the appropriate communications.

b) The Supplier shall provide any required drivers, software, and protocol conversion information to the Buyer for design, development, testing, and maintenance of the supplied networks and interfaces for the period of performance of the contract, including software or firmware upgrades or revisions.

c) The Supplier shall provide a description and examples of all required conversions between protocols and/or communication networks including required software applications and hardware components.

3.4.3.4 Classic I/O

If bussed communications are not feasible for connection of field instrumentation and equipment to control systems, standard Input/Output modules shall be used. Circuit design shall account for the WTP preferred I/O module types, as follows:

Analog Inputs – 4-20 mA current
Analog Output – 4-20 mA current
Discrete Input – 24 Volt dc
Discrete Output – 24 Volt dc

I/O modules shall be optically isolated from input and output wires to protect logic circuitry from high voltage transients. All output circuits shall have over-current protection. The I/O modules shall be of the plug-in type and shall be removable without turning off the power or disturbing field wiring ("hot swappable"). The I/O assemblies shall have indicators that are visible during operation to display the status of the I/O interface and individual I/O channels.

3.4.3.5 Fiber Optic Interface

For equipment packages that include a fiber optic interface the Supplier shall provide a fiber optic connection to the control panel or instrument per the following requirements:

a) The Supplier shall use 50/125 glass fiber patch cables to connect between the fiber optic patch plate(s) and the fiber optic converter(s). Any unused fiber optic connections shall be fitted with protective caps to guard against extraneous light and dust.

b) The Supplier shall utilize a Corning MT-RJ patch plate mounted in a protective housing to provide cable management, strain relief, and fiber protection.

c) Fiber optic patch cables shall utilize unpinned MT-RJ connectors on the converter side of the patch plate. Buyer-installed field cables will utilize pinned MT-RJ connectors.

d) For installations that have 24 fibers or less, the Supplier shall install a Corning CCH-CP24-97 patch plate and SPH-01P Single Panel Housing.

e) For installations that have more than 24 fibers, or where multiple fiber optic cables will be terminated on the field-side of the patch plate, the Supplier shall install the appropriate number of Corning WIC-02P or WIC-04P housings with corresponding CCH-CP24-97 patch plates.

f) All fiber optic designs and installations shall follow the manufacturer's guidance including equipment mounting, bending radius, strain relief, fiber termination, fiber and cable protection, and related items. The Supplier's designs shall make provisions for installation of Buyer's field cables that also meet these requirements.

3.4.5 Instrumentation Requirements

Instrument ranges shall be selected such that the normal operating point is between 35 and 75 percent of the range of the instrument. Except where the Buyer has specifically identified manufacturer and model, all the instruments shall be selected by the Supplier in accordance with guidelines provided herein. The instruments described below shall be selected to meet the required safety classification, specified quality, and the design criteria stated herein and in the primary equipment specification. The systems designed and fabricated shall meet the specified reliability and availability for each system or component.

The Supplier may suggest alternative instruments based on their past experience with similar applications subject to the Buyer's review and concurrence.

3.4.5.1 Flow Measurement

Flowmeters shall provide sufficient turn down ratio to accurately cover the required operating ranges of the Supplier's provided system and when installed shall meet the Buyer's required operational accuracy as stated in the package system specification. Isolation and drain valves shall be installed to allow inline flowmeters to be removed and replaced without having to completely drain the pipe.

Flow measurement devices shall be selected that are optimized for the application and environment of the measured fluid. This includes installation constraints, ambient conditions, and process conditions of the measurement device. The following describes the Buyer's requirements for specific type of flow measuring elements and systems.

3.4.5.1.1 Head Type Flowmeter

Head producing flow elements shall be located and installed in straight runs of pipe in accordance with the American Society of Mechanical Engineers (ASME) Standard MFC-10M.

Differential pressure transmitter in conjunction with concentric sharp edged orifice plates shall be considered for flow measurement devices where a turndown of less than 5, a significant permanent head loss, and an accuracy of ±2% of full scale for liquid or gas flow is acceptable. The calculated d/D (Beta ratio) shall be within the limits of 0.2 and 0.7. Two sets of flange taps with one set plugged and seal welded as a spare shall be supplied. The orifice plate shall be of 304L SS minimum and compatible with process fluid and shall comply with ASME MFC-14M-2003 or ASME MFC-3M-1989. Straight piping runs shall be per API Ch 14, Sec 3, Part 2. Honed meter runs shall be used for orifice measurements for line sizes less than 2".

3.4.5.1.4 Coriolis Mass Flow Meter

Coriolis flow meters may be applied to most liquid and some high pressure gas services where accuracy of less than 0.5% of measurement is required. It shall be considered for service applications requiring up to 50 to 1 turndown. The meter shall be sized for the desired accuracy at minimum and normal flow rate without exceeding the permissible pressure drop at the maximum flow rate. The meter shall be also considered for the service where process temperature and density measurement are also required. The meter shall be securely mounted in a vibration-free location in accordance with the manufacturer's recommendations.

3.4.5.1.8 Turbine Meter

Turbine meters shall be considered for clean low viscosity process streams, where there is no plug flow or water hammer; where higher rangeability (> 10 to 1), an accuracy of ±0.5%, and flow totalization is required. API MPMS standard and ISA RP-31.1 should be consulted regarding proper installation and calibration requirement.

3.4.5.1.9 Vortex Flow Meter

Vortex flow meters shall generally not be considered unless suitable alternate means for measuring flow are not practical. Vortex flow meters have a minimum of 10 to 1 rangeability and low head loss. They are generally applicable to liquids of low viscosity (<10 cP) and are often unsuitable for low pressure gas service. Vortex flow meters are vibration sensitive so they should not be located in the vicinity of large rotating machinery or in lines with hydraulic noise. The meters exhibit an unusually large low flow cut-off. The impact of this loss of signal from the meter on safety and process controllability should be evaluated for application.

3.4.5.2 Temperature Measurement

Temperature measurement devices shall be selected that are optimized for the application and environment of the measurement services. This includes installation constraints, ambient conditions, and process conditions of the measurement devices. The following describes the Buyer's requirements for specific types of temperature measuring elements and systems.

3.4.5.2.1 Temperature Elements

All temperature elements, Thermocouples (T/C's) or Resistance Temperature Devices (RTDs), shall be installed in thermowells to permit removal without process disturbance except where there is no risk to personnel from the process fluid during removal of the measuring element, i.e. shell skin, motor bearings and motor windings. Where a thermowell is not used, and the temperature element is not surface mounted, a permanent label shall be affixed to the primary element, indicating that there is no thermowell.

Sheathed RTDs with transmitters shall be used for remote temperature indication.

Sheathed, grounded junction type E T/C's are preferred temperature sensors when process conditions prohibit the use of RTD's, types J & K T/C's are allowed. T/C's shall be according to ISA MC96.1 or equivalent. Underground junction T/C's shall be used where the process fluids or equipment are at a potential above ground that could lead to dangerous conditions for maintenance personnel and signal conditioning equipment.

Use T/C where:

- No air permit functions are supported by the device.
- The temperature sensor is installed in a high vibration environment; or
- A temperature span exceeding 1400°F is required; or a response time of less than four (4) seconds is required.
- Unsheathed tip thermocouples shall be used where induced electrical voltages or high potentials may be present (e.g. in the measurement of bearing temperature in electrical machinery.)
- Motor bearing temperature measurements may use thermocouples provided local transmitters are used.

RTD elements shall be Platinum with a nominal resistance of 100 Ohm at 0 °C (32 °F). The resistance-vs.-temperature characteristic curve shall conform to DIN 43760, IEC 60751 with a temperature coefficient of 0.00385 ohms/ohm/°C. Three wire element design shall be used.

Unless otherwise specified, RTDs shall be sheathed with Magnesium Oxide insulation. The sheath shall comply with ASTM A276, 316L and ¼" diameter as a minimum. All T/Cs or RTDs shall be duplex design, spring loaded, and supplied with a connection head with internal grounding screw and external ground terminal. All elements shall be connected in the connection head.

Temperature measurements using RTDs shall use remote mounted transmitters with the appropriate input/output voltage isolation and located in the field or panel to connect an isolated signal to the Buyer's or Supplier's control system.

Test thermowells shall have a plug or cap permanently attached with a chain or wire and labeled as a test point.

3.4.5.4 Absolute, Gauge, and Differential Pressure Measurement

Pressure instruments shall be ranged for normal operation at 40-60% of scale for pressure gauge and transmitters.

3.4.5.4.1 Pressure and Differential Pressure Transmitters

Pressure and differential pressure transmitters shall have the following performance as a minimum:

Standard accuracy:	±0.15% of calibrated span for ±50°F temperature changes for rangedown of 5:1 or less
Rangedown ratio:	30 to 1 minimum
Overall stability:	±0.125% of upper range limit for ±50°F temperature changes over 5 year period

For draft range differential pressure transmitters the available spans shall be 0.1 to 3.0"WC. The accuracy shall be ±0.10% of span with a stability of ±0.2% of span per year.

Wetted parts shall be a minimum of 316SS for flanges and 316L SS for the process isolating diaphragm. Mounting bolts shall be 316 SS. Pressure transmitters shall normally be gauge pressure type referenced to atmospheric pressure.

On low pressure applications where composition is being controlled using the pressure measurement, absolute pressure type transmitters referenced to a constant true zero pressure shall be used. Filled fluid shall be compatible with process material, pressure, and temperature. When required by the physical properties of the process fluid, a factory sealed filled system with a diaphragm shall be considered, although these should be avoided at low differential pressures. The capillary should be protected by a 316SS armor. Differential pressure transmitters shall be rated for a minimum 1000 psig static pressure and shall be able to withstand overrange pressure equal to the meter body rating and the pressure conditions or relevant piping specifications.

3.4.5.4.3 Pressure Gauges

All pumps, except sump pumps, shall have a discharge pressure gauge and a suction pressure test connection. Pressure gauges shall be provided downstream of pressure reducing stations and with blind pressure switches.

Pressure indicating scales shall be graduated in direct engineering units for the range specified. Pressure gauges shall be 4 ½" diameter, ½" MNPT bottom connection, plastic case, white laminated phenol dials with black graduations. Process gauges shall be solid front with a blowout back. Movement may be either rotary geared stainless steel or cam and roller type. Accuracy shall be 0.5% of full scale. Bourdon tube, socket, and tip shall be stainless steel or suitable alloy for specific services. Back-of-panel receiver gauges used for testing shall have 2 ½ inch dial.

Pulsation dampeners or snubbers shall be required on all pulsating services such as reciprocating pumps and compressors. Other applications where severe service from pulsating pressure is anticipated, pulsation dampeners may be specified at engineer's discretion. Dampening shall be provided by liquid filled gauge bodies.

Gauge ranges shall be selected such that the operating pressure falls between 40 to 60% of the gauge scale.

3.4.5.5 Control Valves

Valves shall be sized per ISA S75.01. Valves shall be sized to control normal operating design flow at 50% to 70% of its maximum opening. Valves shall be sized to be no more than 90% open at maximum operating flow and no less than 10% open at minimum operating flow. If calculated Cv dictates valve size two line sizes below process line, reduced trim in valve one line size below process line shall be used. The valve shall be selected and sized so that the installed rangeability is at least 20:1.

The potential for cavitation shall be evaluated and the valve size, trim, or type selected to prevent the occurrence of cavitation.

The valve trim shall be selected so that the installed operating characteristics of the control valve shall be nominally linear over the operating flow range. To achieve this, equal percentage trim shall normally be used for control applications except for some applications where linear trim is required. Linear trim shall be used for those applications where the pressure drop across the control valve is more than 50% of the upstream pressure or constant pressure across the control valve. A quick opening valve characteristic shall generally not be used for throttling services. Valve trim materials shall be as follows:

1. For metal to metal seating configuration, 316L SS shall be the normal and minimum acceptable material.
2. Stellite faced seating surfaces or other approved hardened materials shall be provided in difficult services, i.e. cavitation or flashing.
3. Soft seat trim material shall be used when bubble-tight shut off is a requirement or where determined by the process fluid's corrosiveness. Elastomer used for seating material shall be compatible with process fluid and service application.

Valves with soft seats shall be used within the limitations of the seating materials for positive bubble tight shut-off. On/off valves shall have integral solenoid pilots and limit switches. Foundation® Fieldbus compliant topworks are preferred by the Buyer for on/off valves. Seat leakage shall be in accordance with ANSI/FCI 70-2 seat leakage definitions and requirements. Fire testing and certification of on/off valves shall be in accordance with provisions of API SPEC 6FA or API STD 607. It should be noted that this testing does not qualify control valves to meet redundancy separation / single failure criteria requirements of Section 4.5-1 of the Safety Requirements Document.

Spring opposed pneumatic diaphragm actuators shall be the normal mechanism for operating throttling valves. Actuator sizing shall permit full valve stroking against the maximum process differential pressure and spring tension with the available instrument air supply pressure and output from positioner. Piston actuators shall be used where stroke length or thrust required exceeds that available from diaphragm actuators, or environmental conditions preclude the use of diaphragm actuators.

Valve positioners shall be furnished for all control valves. Positioners shall have input, output(s), and supply pressure gauges. Any split range requirements shall be achieved by using the control system. The failsafe action of the valves shall be determined by process requirements with regard to safe operation and emergency shutdown requirements and shall be marked on P&IDs. Foundation® Fieldbus positioners shall be supplied for all non-Safety valves and standard positioners shall be supplied for all SAFETY SSC valves. Remote Foundation® Fieldbus positioners shall be supplied where valve environment precludes the use of microprocessor based devices.

All valves shall be designed to meet the maximum noise level as defined in OSHA paragraph 1910.95. Maximum noise level is defined as 85 dBA when measured 3 feet from the valve under normal operating conditions. Noise prediction methods shall be those recommended by the specific valve Supplier.

Limit switches shall be hermetically sealed and suitable for mounting on the valve. Independent switches shall be provided as required for valve open and closed positions.

When control valves are installed in horizontal lines the actuator shall be installed above the line. Sufficient clear space shall be provided above the valve to allow removal of the top works with stem and plug as an assembly. A hand-wheel shall be furnished on each accessible control valve

where required for manual control during upset conditions. Modulating control valves shall be provided with isolating block valves, gate or globe type, and vent/drain valve to allow the control valve to be taken out of service and a globe bypass valve for hand control, if required and approved, around the control valve during the time the control valve is out of service. Both isolating block valves and bypass valve shall have flow capacity more than control valve capacity.

3.4.5.6 Solenoid Valves

All solenoid valves shall operate with zero pressure differential and shall close against the maximum design differential pressure. Solenoid valves shall be suitable for the environmental conditions and the electrical area classification specified in the referenced material requisition or data sheet. Solenoid coils shall be rated for continuous operation and heavy duty type equipped with class H insulation and a minimum of temperature class T3 encapsulated coils. Low wattage type shall be supplied for 24VDC applications and shall not exceed 12 watts. Coil enclosures shall include provisions for terminal connections rather than pigtails and have ¾ inch or ½ inch NPT conduit connections. Vent port is to be fitted with a bug screen.

3.4.5.7 Limit Switches

Limit switches shall be electromechanical type with lever arms, pushbuttons, or cams as actuators that operate momentary contacts.

Switch contacts, if supplied, shall be snap action, hermetically sealed design and suitable for the environmental conditions where they're located. As a minimum, switch contacts shall be of a Single-Pole-Double-Throw (SPDT) design. Contact rating shall be at a minimum 5A @ 120 VAC or 2.5A @ 24 VDC.

Limit switches shall be mounted such that actuation does not cause damage or excessive limit switch movement.

3.4.5.16 Rotating Equipment Monitoring Systems

Detection of imminent machine failure in time to safely shutdown the associated process shall be provided as required by the primary equipment specification. Instrumentation required to protect rotating machinery from damage is addressed herein.

3.4.5.16.1 Machinery Parameters for Monitoring

Machinery requiring high availability should be provided with sensors to continuously monitor:

1. Both radial vibration (X and Y directions) and thrust of shaft
2. Temperature of all journal and thrust bearings
3. Lubrication system operation including oil pressure and temperature
4. Rod drop and impact monitoring for reciprocating compressors.

Consideration shall also be given to providing seal system leak detection.

The Supplier shall provide and install non-contacting vibration and position sensor probes for machine monitoring of both radial vibration and thrust position of the shaft. The installation of all bearing thermocouple and shaft position monitoring equipment shall be in accordance with API 670. Bearing thermocouples shall be type E calibration.

3.4.5.16.2 Shaft Speed Monitoring and Control

Speed transmitters shall have sensors of non-contact type. Speed control of rotating equipment shall be accomplished by the use of speed transmitters and fast response control loop, Electronic governors are preferred where machine speed regulation is important for process control. Overspeed protection independent of the governor should be provided.

3.4.6 Safety Instrumentation and Controls

3.4.6.1 SS instruments serving an active safety function and designated as "Z" instruments have been deleted from the Supplier's work scope.

3.4.6.1.1 Deleted

3.4.6.1.2 Deleted

3.4.6.2 Deleted

3.4.6.3 Deleted

3.4.6.4 Deleted

3.5 Deleted

3.6 Enclosures, Cabinets, Panels, and Racks Requirements

The Supplier shall provide the instrument enclosures, cabinets, panels, and racks necessary to support the instrumentation and control systems required by the primary equipment specification. Instruments that require physical or environmental protection shall be installed in enclosures that meet the specifications of this section. Instruments that have a construction and NEMA rating that permits unprotected installation in the field shall be either individually field mounted or installed on open instrument racks that meet the requirements of this section. Operator control panels for interfacing to the control systems shall meet the requirements of this section. All enclosures, cabinets, panels, and racks shall be designed and fabricated to be in full compliance with NFPA 70-1999.

3.6.1 Rating and Type

All enclosures shall be designed for front access only unless otherwise specified. All components and equipment in the enclosure shall be accessible and removable from the front. Enclosures shall be either outdoor, indoor, hose down, or corrosive environments per the NEMA 250 and ICS 6 standards based on the environmental specification requirements. In the absence of a specific NEMA requirement in the main mechanical package specification, a NEMA rating of 12 shall be the minimum acceptable requirement for indoor and NEMA 4X for outdoor. In areas where radioactive contamination is likely, only stainless steel enclosures shall be used.

3.6.2 Enclosure Internal Environmental Conditions

The enclosure design shall ensure that no internal equipment or component is subjected to levels of dirt or dust that exceed those specified by the equipment or component manufacturer. The temperature inside of the enclosure shall not exceed the maximum and minimum operating temperatures of any device located within it.

Natural convection and conduction cooling is the preferred method of dissipating heat within the enclosure. If "Hot Spots" such as those generated by power supplies or other electrical equipment are present, or an internal temperature exceeding 100 °F is anticipated, the enclosure shall be fitted with adequately sized ventilation fans where ambient conditions permit.

Where forced-air cooling is necessary and practicable for proper operation of the apparatus housed in the enclosure, the Supplier shall provide special filters, blowers or other suitable filtration or cooling devices that will meet the requirements of NEMA 250 and ICS 6.

The Supplier shall provide enclosures with thermostatically controlled space heaters, where required by ambient conditions, to maintain temperature above dew point and above freezing. If equipment is located outdoors, space heaters must be provided, unless otherwise stipulated by the Buyer.

The Supplier shall provide all mounting brackets, wire, and equipment needed to attach the heating or cooling devices to the enclosure without degrading the NEMA 250 and ICS 6 enclosure requirements.

3.6.3 Mechanical Requirement

Freestanding enclosures shall be fitted with a base, have rigid bracing, removable lifting eyes and include provisions for securing to floor with anchor bolts or bolted or welded to the Buyer's floor embed. Wall mounted enclosures shall be sized by the Supplier and shall include all rigid bracing, door latch, and mounting fixtures needed to mount the enclosure to the wall.

Where lockable enclosure doors are specified on the primary equipment specifications, datasheets, or drawings, the doors shall have a common key lock. The Buyer will review and concur with the key arrangement and selection. All packaged systems and equipment controls shall be pre-wired to terminal blocks in permanently mounted enclosure.

The terminal blocks shall be designed for easy interconnection to the Buyer's control and communication circuits (see section 3.4.3 design requirements of this specification for signal transmission interface).

Interconnecting wire shall be run in intermediate metallic conduit. Interconnecting Fieldbus communication cables shall be armored type and supported in unistrut channel or on existing structure.

Access to enclosure internal components or equipment shall not require the use of hand tools other than for opening the door. Access to any component within the enclosure for maintenance or replacement shall not be prevented by proximity to other components within the enclosure. Equipment mounted in the rear of the enclosure shall be on a back-panel and positioned to facilitate removal and replacement. Enclosure back-panels shall be fabricated from low-carbon steel and shall be finished with semi-gloss or gloss white paint. Enclosures shall be sized to allow clearance between the enclosed components, cables, print pockets, and components mounted on the door.

Suites of enclosures shall be designed to accommodate shipment for a two bay interface. Where a suite of enclosures is made of discrete cabinet sections that will be separated for shipment and movement on site and then reconnected in the same configuration, provisions shall be made (such as the inclusion of dowel pins) for the alignment to be reproduced on site. If two or more enclosures are connected and share wiring, the side-panels they share shall be removed.

Where enclosures are to be installed by the Supplier, they shall be placed in a position that allows the doors to be opened fully for easy access to wiring and components for maintenance, testing and troubleshooting.

Where enclosed or protected installation is not required, then racks shall be used for mounting instruments to provide ease of maintenance and calibration. The rack frame for mounting non-Safety instruments shall be constructed of stainless steel unistrut channel and stainless steel unistrut systems components and designed to support the weight of installed instruments. The rack frame for mounting SAFETY SSC instruments shall be designed, constructed, and qualified to the requirements stated in the primary equipment specification. Free standing racks shall be fitted with a base, rigid bracing, and lifting eyes. Racks shall also include provisions for securing to walls or floor with anchor bolts or bolted to the Buyer's embed. All rack mounted instrumentation shall have NEMA 4X rating or better.

3.6.4 Enclosure Segregation Requirements

Deleted

3.6.5 Enclosure Grounding Requirements

The enclosure grounding system shall be installed in conformance to IEEE Guide 1050-1996, section 5.3.1 "Single point grounding system". All instrumentation enclosures shall have an equipment safety ground bus and an isolated signal ground bus, except instrument junction box. Instrument junction box shall only have an equipment safety ground. The grounding bus shall be constructed with solid copper, and all connections shall be drilled and tapped. The ground bus shall be drilled and tapped for an additional 20 percent spare terminations.

The equipment safety ground bus shall be solidly bolted to the enclosure structure. Where enclosures are to be connected together after final installation, each end of the safety ground bus will include provisions for connection to the adjacent enclosure safety ground bus. A bolted compression type 2/0 terminal lug shall be installed at each end of the bus to facilitate connection of the Buyer's 2/0 AWG stranded copper ground cable.

All removable metal components shall be connected to the equipment ground bus. Enclosure and back-panel shall be bonded to the equipment ground. Grounding for electrical devices and instruments, including signal and power supply shall be in accordance with manufacturer's recommendations and applicable NEC requirements. Instrument cable shield and signal common conductors shall be connected to the isolated signal ground bus, unless otherwise required by the manufacturer.

The isolated signal ground bus shall be electrically isolated from the enclosure structure and the safety ground bus. A bolted compression type 2/0 terminal lug shall be installed at each end of the isolated ground bus to facilitate connection either to another isolated signal ground bus in a connected adjacent enclosure or to the Buyer's 2/0 AWG stranded copper ground cable.

Instrument cable shields and signal common conductors shall be connected to the isolated signal ground bus. Each signal ground conductor shall be fastened to the isolated signal ground bus. For junction boxes with signal wiring going back to the Buyer's control system, the cable shield shall be terminated on an isolated terminal block and carried back to a ground supplied by the Buyer. Ground conductors connected to the isolated signal ground bus shall have an insulation color code of green with yellow tracer.

3.6.6 Electrical and Wiring Requirements

The Supplier shall mount, connect and wire each instrument or control device such that adjustment, maintenance, removal and replacement may be accomplished in a safe manner without interruption of service to adjacent but unrelated equipment and without placing undue stress on installed wiring or devices. Accommodations for strain relief shall be made when routing wire to hinged enclosure doors and shall be wrapped with spiral wire wrap.

Terminal points shall be used for only one wire unless specifically identified for more than one wire by an NRTL. Wire splicing shall not be used unless approved by the Buyer. Bridge or comb jumpers shall be used for adjacent terminal connections. Jumpers shall not be installed on the field side of the terminal strip.

Terminal blocks shall incorporate the following features:

Space saving design
Screw clamp wire connection
Single level configuration
Integral test facilities
DIN-rail (35mm) mounted

Isolating type terminal blocks shall be Weidmuller "W" series, Allen Bradley 1492-JKD3TP, Phoenix Contact, or Buyer approved equal. Non-isolating feed-thru terminal blocks shall be Weidmuller "W" series, Allen Bradley 1492-W4, Phoenix Contact, or Buyer approved equal. Terminal blocks for the

incoming power supply shall be capable of connecting #4 AWG to #12 AWG conductors, such as Allen Bradley 1492-W16S, or Weidmuller WD 35. The terminal blocks for incoming 120 VAC power and 120 VAC power distribution shall provide separation between Control/Instrumentation power and enclosure utility power, with separate termination points for each. Enclosure utilities include convenience accessories, cooling fans, and heaters.

All terminal blocks shall be identified by a unique terminal block number and approved by the Buyer.

For all enclosures, each incoming power supply shall be provided with circuit protection and shall have a manually actuated electrical power disconnect device mounted on/in the enclosure in an easily accessible location. The electrical power disconnect device may be a single device or multiple devices for individual circuits.

Each device that uses 120 VAC for power shall have individual connections protected via rail mounted circuit breakers. The circuit breakers used for individual control or power circuit protection within the enclosure shall be thermal magnetic breakers such as Weidmuller CB, Allen Bradley type 1492, Phoenix Contact, or Buyer approved equal. The circuit breakers used for individual control or power circuit protection external to the enclosure shall comply with UL489. They shall be Dual-In-Line, DIN-rail mountable TS35, TS32, or equivalent. Power shall not be "daisy chained" from instrument to instrument; however, the bridge or comb jumpers may be used on the supply side of the circuit breakers. A fuse and circuit breaker directory shall be contained in a holder permanently affixed on the inside of each door or back-panel and protected by a clear window.

All internal enclosure wiring shall be neatly dressed in slotted non-metallic wireways. The wireway shall be securely fastened to the enclosure back-panel by use of Stainless Steel screws. Circuits of different voltages (service level) shall be terminated on physically separate terminal strips and clearly labeled to show the circuit voltage. Terminal blocks shall be segregated according to signal type. In the event SIS system components are included in an enclosure, the wiring shall be clearly identified and segregated from non SIS circuits.

See table 1 for the instrumentation cable schedule:

TABLE 1
Instrumentation Cable Schedule

Cable Code		Cable Desc.	Specific Cable Spec	Comments	Circuit ID	Cable General Spec (superceded by specific cable specification)
Inst. cables-analog circuits	**In SR**	**Analog signals**				
1TSPR#16	X	Single twisted pr, #16AWG, 300V, ITC, PLTC	Single twisted pair with overall foil shield	Individual instrument signals, instrument 24 vdc power	Black, White	Cables UL listed as ITC and PLTC, 300 V insulation, UL1581 listed for 70,000 BTU vertical tray flame test; 100% foil polyester/aluminum individual and overall shields with 22AWG drain wire. Each circuit shall have a minimum of 6-8 twists/ft.
2TSPR#16	X	Two twisted shielded pr #16AWG, 300V, ITC,PLTC	Individually twisted shielded pairs with overall foil shield		Black, White conductors -individual circuits numbered	
Inst. cables-thermocouple circuits	**In SR**	**Thermocouple signals**				
1JX#16	X	Single twisted pr, #16AWG, 300V, ITC, PLTC	Single twisted pair with overall foil shield	Type J thermocouple - iron (+), constantan (-)	White (+), Red (-)	Cables UL listed as ITC and PLTC, 300 V insulation, UL1581 listed for 70,000 BTU vertical tray flame test; 100% foil polyester/aluminum individual and overall shields with 18AWG or 22AWG drain wire.
1KX#20	X	Single twisted pr, #20AWG, 300V, ITC, PLTC	Single twisted pair with overall foil shield	Type K thermocouple - chromel (+), alumel (-)	Yellow (+), Red (-)	
Data communication cables	**In SR**	**Foundation Fieldbus**				
1TSPR#18FF	X	Single twisted shielded pair, Foundation Fieldbus	Foundation Fieldbus Type ER crush resistant cable, orange jacket, preset lengths with Pepperl-Fuchs connectors	Pepperl-Fuchs FieldConnex mini cordsets, Belden 3076F	Blue (-) pin 1; Orange (+) pin 2; Shield pin 3; not used pin 4	Cable UL 1581 listed for 70,00 BTU vertical tray flame test, 100% foil polyester/aluminum overall shield with 20 AWG drain wire
Instrument cables-digital circuits	**X**	**Discrete I/O**				
use 1TSPR#16 above	X	Single Twisted pr #16AWG, 300V, ITC, PLTC	Single twisted pair with overall foil shield	Individual instrument signals, instrument 24 vdc power		Cables UL listed as ITC and PLTC, 300 V insulation, UL1581 listed for 70,000 BTU vertical tray flame test; 100% foil polyester/aluminum individual and overall shields with 22AWG drain wire. Each circuit shall have a minimum of 6-8 twists/ft.
2TPR#16	X	Two twisted pr #16AWG, 300V, ITC, PLTC	Individually twisted pairs with overall foil shield	Valve limit switches, process switches	Black, White conductors -individual circuits numbered	

AC power shall be routed through separate wireways or separated with a divider from 24 VDC discrete and analog instrument signals within enclosures. Power and signal cabling shall not be run in parallel, except in separate wireways, and should cross at a 90-degree angle only.

The interior of each Freestanding, floor-mounted enclosure shall be equipped a 120 VAC light and switch. The enclosure shall be equipped with a 120 VAC duplex receptacle. Route wiring within the enclosure for convenience power receptacles, cooling fans (where approved), and space heater (if required) in accordance with standard industrial practice. The Supplier shall derive power for these components from the Buyer provided 480 VAC power supply. If a 480 VAC power supply is not available, the Buyer will provide the 120 VAC supply. Control and instrumentation power sources shall be separate from utility power sources.

All instrument signal cables shall be of the type and specification as listed in Table 1– Instrumentation Cable Schedule. Power cable, wire size and type shall be in accordance with NFPA 70 - 1999.

All wires and cables external to an enclosure shall be of the instrument tray cable (ITC) type, flame-retardant (passes IEEE 1202 vertical flame test), and have a 90 °C continuous rating in wet or dry locations. All cable insulation and jacket material shall be resistant to heat, moisture, impact, ozone, and meet or exceed the following requirements:

300 V rated for low voltage instrument cables (up to 120 VAC and 125 VDC)

600 V rated for power/motor control cables (up to 480 VAC and 250 VDC)

The wire insulation color for power wiring shall be of the following:

Black	Ungrounded conductors more than 50 VAC
White	Grounded conductors more than 50 VAC
Green	Equipment grounding wire
Green/Yellow tracer	Isolated instrument grounding wire
Light Blue	Ungrounded supply voltage less than 50 V (DC or AC)
Violet	Switched ungrounded voltage less than 50 V (DC or AC)
White/Blue tracer	Grounded or return supply voltage less than 50 V (DC or AC)

3.6.7 Accessibility and Maintenance

The enclosures shall be designed so that tools and test equipment may be used to accomplish all necessary adjustments, maintenance, cleaning, testing, and calibration. If specialized tools are needed for adjustments, maintenance, cleaning, testing, and calibration the Supplier shall provide two sets per order to Buyer upon delivery. Test points and calibration areas shall be accessible, clearly identified, and labeled. Adequate space shall be provided for removal and replacement of individual instruments or components located inside the enclosure. Equipment mounted in the rear of the enclosure shall be positioned to facilitate removal and replacement from the front of the enclosure.

3.6.8 Enclosure Nameplates, Labels, and Wire Markers

Where one end of the wire is provided by the original equipment manufacturer, connected to the component, in a pigtail configuration, and identifiable by other means such as color coding, only the

end of the pigtail that is provided un-terminated by the original equipment manufacturer is required to be identified by the mean described in this section.

The Buyer will provide the enclosure name, service description as detailed in section 8.1, and wire marker syntax and name/number.

External enclosure nameplate shall be constructed from 2-ply laminated plastic with white surface and black core. Letters shall be engraved through the white surface to the black core. Enclosure nameplate shall be engraved with the equipment tag number and a very brief service description. The nameplate shall be a minimum of 1/8 inch thick with beveled edges. The nameplates shall be attached to the enclosure either with an industrial adhesive appropriate for the tag and enclosure materials or by using stainless steel drive screws without violating the NEMA rating of the enclosure. The minimum character height for enclosure name/number shall be no less than 5/8 inch. The minimum character height for service description shall be no less than 1/4 inch.

Internal enclosure nameplates shall be provided for instruments, instrument accessories, switches, relays, terminal strips, lamps and equipment with a field wiring connection. Nameplates shall be visible from the front of the cabinet with the doors open. The nameplates shall be constructed from 3-ply laminated plastic with white surface and black core. Internal enclosure nameplates shall be attached using epoxy if it is compatible with the mating materials, causes no detrimental effects, and will not cause any structural damage. For a viewing distance of 3 feet, the minimum character height shall be no less than 1/8 inch.

Safety Labels shall not be attached to removable items that could be replaced in a different orientation.

Each wire shall be clearly identified with a wire marker at each end by means of heat shrinkable plastic sleeves or other Buyer approved permanent type wire marker in black text on white background. Open markers or "C" type sleeves that can be applied after a conductor is terminated will not be accepted. Minimum character size for wire marker shall be no less than 3/32 inch. The wire markers shall be attached within a maximum of 2 inches from the termination of the wire. Orientation of the wire marker shall be such that its identification is visible when viewed from the front of the enclosure looking in.

3.6.9 Human Factors

Controls, indicators, and the similar type devices shall be mounted between 36 and 70 inches above the floor.

3.7 Equipment Electrical Requirements

Refer to Attachment EKP0 for any additional electrical requirements.

3.7.2 Discrete Interfaces

The Supplier shall provide isolated, dry contacts where hardwired signals from controls or monitoring equipment on Supplier's packaged equipment is required by the Buyer's control system. The interfaces are distinct from control systems communications interfaces described in paragraph 3.4.

3.7.3 Analog or Continuous Signal Interfaces

The Supplier shall provide current loop isolators where a continuous signal in the Supplier's system is required to be monitored by the Buyer's control system.

3.7.4 Surge Protection

The Supplier shall provide surge protectors for solid-state equipment, if not inherent in the equipment design, to prevent damage from the effect of lightning strikes or other electrical transients.

3.7.5 Arc Suppression

The Supplier shall provide and install a suitable arc suppression device or kickback diode across switched loads unless the switching component includes inherent arc suppression. Kickback diodes shall be supplied and installed on all inductive DC loads.

3.7.6 Emergency Stop and Reset

All machinery Equipment Control Panels shall be provided with an emergency stop (E-stop) independent of software or electronic logic. Where physical injury is credible, E-stops will be provided local to the machine. In addition, where mechanical handling equipment is controlled remotely, E-stops shall be provided at such control points. In order to prevent a subsequent restart, while the dangerous condition exists, the emergency stop circuit shall remain in the shutdown state until the circuitry is reset.

For machinery equipment which has no communication with the Buyer's control system, the E-Stop circuits shall provide a local indication of the status of the E-Stop when activated. Local indication of E-Stop status may be provided by either a local indicating light and/or a physically depressed E-Stop button/switch.

Machinery equipment in communication with the Buyer's control system shall provide status of all E-Stop circuits which shall be individually monitored in the Buyer's control system. This will be achieved by additional contacts on the switch wired directly to the Buyer's control system. Contacts wired from motor control relays will not be accepted.

3.7.7 Conduit and cable

Exposed conduit for process power and instrumentation shall be rigid, galvanized steel (RGS) and supported with corrosive resistant hardware. As a minimum, single pair instrumentation cable shall be 18 AWG, multiple pair instrumentation cable shall be 20 AWG, and control and instrument power circuits (120 VAC/125 VDC) shall be 14 AWG.

3.7.7.3 Separation

AC power shall be routed through separate raceways or separated with a divider from 24 V DC discrete and analog instrument signals within enclosures. Power and signal cabling shall not be run in parallel, except in separate raceways or wireways, and should only cross at a 90-degree angle. This includes wiring to door mounted instruments contained in spiral wrap. A minimum of 1/4" separation shall be maintained between power & instrumentation / signal wiring.

Internal enclosure wiring shall be neatly dressed in slotted non-metallic wireways. The wireway shall be securely fastened to the enclosure back-panel. Non-metallic wireways shall be provided on the opposite sides of the field terminations to be used by the Buyer. Adequate space shall be provided around terminal blocks to allow the Buyer to install, route and terminate cables. The field side wireway shall be designed for multi-core field cables with a minimum conductor size of #14 AWG.

Circuits of different voltages (service level) shall be terminated on physically separate terminal strips and clearly labeled to show the circuit voltage. Terminal blocks shall be segregated according to signal type. If safety instrument system components are installed in an enclosure, the wiring shall be clearly identified and segregated from non-safety instrumentation systems.

Power supplies will be provided from separate sources for safety and non-safety instrument use. The Supplier shall design and provide a physically and electrically separate power supply distribution and circuitry, as required, for safety instrumentation systems and non-safety instrumentation systems in accordance with IEEE 384.

Instrumentation cables shall be terminated in separate junction boxes from the power and control cables.

3.7.8 Wire and Cable Markers

Where one end of the wire is provided by the original equipment manufacturer, connected to the component, in a pigtail configuration, and identifiable by other means such as color coding, only the end of the pigtail that is provided un-terminated by the original equipment manufacturer is required to be identified by the mean described in this section.

All Supplier provided wiring shall be identified at each end with a numbering system that is cross-referenced on all appropriate drawings. The wire-numbering scheme shall be proposed by the Supplier with the Buyer's concurrence. Ferrules or wire markers shall be indelibly and clearly marked in black on white plastic, heat shrinkable sleeves. Open markers or "C" type sleeves that can be applied after a conductor is terminated will not be accepted. Junction box (JB) terminals shall have adequate space between them and the JB internal walls so connected cables and individual wire numbers can be easily read without disturbing the wiring within the JBs.

All cables provided by the Supplier shall be clearly identified with a heat shrink type label.

3.8 Process Connections, Tubing and Instrument Mounting

3.8.1 Instrument Process Connections

The preferred orientation of process connections in horizontal piping is shown in Appendix A. The purpose, for all pipe runs for instrumentation use, is to avoid gas pockets in liquid and vapor sensing lines and to avoid liquid pockets in gas sensing lines. Sensing lines for gas measurements shall slope downward toward the process at least 1/4" per foot. Sensing lines for liquid shall slope downward toward the instrument at least 1/4" per foot. Measurement of pressure or flow in steam lines or condensable vapor lines shall be provided with condensate pots to ensure known liquid fill level in sensing lines.

Piping specifications are generally as required in the process piping section of the primary equipment specification. Pressure measurement connections shall be ¾ inch except where the process piping is ½ inch or less. If the process piping is ½ inch or less, the instrument connection shall be ½ inch. Instruments mounted in-line or tanks shall be installed per manufacturer's requirements. Welded process connections shall be socket or butt welded per the requirements of the piping specification in the primary equipment specification.

Generally provide connections on piping and vessels for instruments in accordance with the following:

Type of Measurement	Screwed	Socket Welded	Flanged
Analyzer	¾"	-	1 ½"
Flow			
Orifice Tap	½"	¾"	2"
Flow Tube Tap	¾"	¾"	2"
Level			
Differential Type			
Standard	½"	¾"	2"
Flange Mounted	-	-	3"
Ball Floated			
External Cage	1 ½"	1 ½"	1 ½"
Vessel Mounted	-	-	4"
Capacitance	1"	1"	3"
Radar	-	-	6"
Ultrasonic	1"	1"	3"
Purged Tube	½"	½"	6"
Bridle (Standpipe)	3"	3"	3"
Pressure			
Piping	¾"	¾"	-
Vessels	¾"	-	1 ½"
With Seals	-	-	3"
Temperature			
In Piping	1"	1"	1 ½"
In Vessels/Tanks	-	-	1 ½"

3.8.2 Instrument Isolation Valves at the Instrument

To allow isolation of pressure sensing instruments, each pressure-sensing instrument shall have a shutoff valve, or a 2-valve manifold for transmitters, that is close to the instrument and is readily accessible. The Supplier shall, however, provide bleed valves on direct connected pressure gauges and pressure switches. Individual isolation or bleed valves shall be Swagelok instrument ball valve series 40 or Buyer approved equal with either screwed or compression end fittings as appropriate. All remote mounted pressure instruments shall have an integral manifold (block and bleed). All differential pressure instruments shall have integral five valve manifolds. All instrument valve manifolds shall be of 316 SS construction with Viton O-ring seals unless otherwise specified in the primary equipment specification. Other materials shall be required depending on ambient radiation conditions. The Supplier shall propose alternate materials for instruments as appropriate for the Buyer's review and concurrence.

3.8.3 Thermowells

Thermowells shall be provided for each temperature sensor. Wake frequency calculation shall be performed using ASME PTC 19.3 to ensure that the velocity-induced frequency is not more than 80 percent of the critical frequency during all modes of operation. Protective tubes in lieu of thermowells are acceptable for HVAC air duct applications.

All thermowells shall have sufficient extension to preclude interference with process pipe or vessel lagging (insulation).

The following are standard thermowell length, insertion (U) length and Lagging (T) length proposed for the project:

A. Threaded Thermowells

Line Size	"U" Length	Stem Length	Remarks
≤ 2"	2 1/2"	4"	Line swage or elbolet installation
3" & 4"	4 1/2"	6"	Elbolet or latrolet installation
4"	2 1/2"	4"	
6 & 8"	4 1/2"	6"	
10 & 12"	7 1/2"	9"	
≥14"	10 1/2"	12"	

Insulation Thickness	"T" Length	Remarks
2" & less	None	
3"	3 1/2"	
4"	4 1/2"	
5"	5 1/2"	
6"	6 1/2"	

B. Flanged Thermowells

Line Size	"U" Length	Stem Length	Insulation Thickness
3"			See note below
4"			See note below
6"		9"	See note below
			See note below
		12"	See note below

Note: Approximately 6" clearance between the top of line and the top of well flange face available for insulation.

Thermowells shall not be installed in the minimum straight run of pipe, upstream or downstream of a flow element.

3.8.4 Sensing Tubing

Sensing lines shall be kept as short as possible and shall have a continuous slope to promote them being kept free of liquid, as appropriate. Slope shall be 1/4 inch per foot minimum. Slope instrument impulse lines toward the process to prevent the accumulation of condensable liquid in gas lines.

Tubing runs shall be properly supported in tube clamps or channel and protected from mechanical loads. Expansion bends shall be provided if necessary to allow for movement of supporting structures or change of length due to temperature caused expansion or contraction. Tubing runs shall not prevent access to equipment or instruments for operation or maintenance. Tubing bends will be provided to allow easy removal of instruments.

Use air or liquid purges, chemical seals, or other suitable means to ensure low maintenance, trouble-free operation for instruments in particulate and/or chemical service. Purges shall be provided such that purge velocity is greater than process velocity. Process leads filled with a special liquid shall not be used.

Tubing runs that can contain high temperature fluids shall be covered with insulation or screens where necessary for personnel protection. Prefabricated heat-tracing bundle is preferred for condensing gasses.

3.8.5 Pneumatic Supply and Signal Lines

Pneumatic piping and tubing shall be grouped and supported in parallel runs. Unless otherwise specified all pneumatic tubing shall be seamless 316 SS as a minimum. To facilitate installation by the Buyer at site, all incoming/outgoing air connections shall terminate at clearly identified bulkhead fittings. Instrument tubing shall be identified at the bulkhead terminal connection with a suitable tag indicating the instrument tag number or an identifier used on the Supplier's piping/tubing diagrams.

Where the Supplier requires instrument air, the Buyer's instrument air supply headers will be connected to the Supplier's package at one location. The Supplier shall provide filtration and pressure reduction as necessary for air utilization. Where pressure reduction is necessary, The Supplier shall provide two pressure regulators and two filters piped in parallel with the necessary valving to allow removal and maintenance of either regulator or either filter without impacting operation of the supplied equipment.

Provide isolation valves and calibration connections on impulse and pneumatic signal lines to permit in-place calibration. When two or more instruments or accessories are connected through fittings to the same bulkhead connection, needle type shutoff valves shall be located at each instrument or accessory.

Where pressure switches are provided as secondary devices for alarm initiation, a plugged tee shall be installed between the isolating valve and the switch to facilitate testing.

3.8.8 Instrument Location and Mounting

Instrument mounting locations shall be selected with consideration of both function operation and accessibility requirements for maintenance. Instrumentation should not be mounted on vibrating equipment or light duty support. Instruments shall not be mounted on handrails or safety railings. Instrument mounting bolting and hardware shall be 316 SS. Mounting brackets and stands for SS instrumentation shall be qualified to the seismic requirements specified by the primary equipment specification.

3.8.8.1 Operability Requirements

The location of pressure sensing instruments shall be selected to minimize the need for purged leads and special seals to achieve satisfactory operation.

3.8.8.2 Accessibility Requirements

Each instrument shall be installed so as to allow adequate safe access for both operation and maintenance.

4 Materials

4.1 General

Selection of material shall be based on fluid properties, environmental conditions, or as specified on the primary equipment specification and/or material requisition, to which this specification is attached.

4.1.1 Instrument Impulse Tubing and Tube Fitting

Instrument impulse lines shall generally be 3/8 inch OD x 0.035 inch wall, seamless, annealed, ASTM A269, Grade TP316 SS with a carbon content of less than 0.03% and an RB80 hardness. Instrument tubing shall be marked in accordance with the ASTM material specification, which shall indicate as a minimum, the type and grade of material.

All compression fittings shall be machined or forged from 316 SS with carbon content less than 0.03% or 316L SS. Other tube fitting materials may be used (with Buyer's approval) as required for the service applications and the environmental conditions. All tube compression fittings shall be of the two ferrule, flareless design, gageable, and maintain a leak tight connection after 20 remakes (minimum) per fitting manufacturer's remake instructions on any recommended tubing. All components of the fitting shall carry the manufacturer's name and trademark. The Supplier shall only supply tube fittings from one product line of a single manufacturer. Materials for flareless compression type stainless steel tube fittings shall be ASTM A182 for forgings and ASTM A276 for parts machined from bar stock.

Tubing within radiation areas such as process cells or canyons shall be fusion welded and fabricated from 316L SS. Any tubing fittings within these process cells or canyons shall be butt welded tube fittings fabricated from 316L SS.

Manufacturers of tube and fittings shall also have tubing and fittings available in 316 stainless steel, Alloy 400, Alloy 20, Alloy C-276, Alloy 600, titanium, and carbon steel.

4.1.2 Instrument Manifold Valves

Integral 2-valve manifolds shall be supplied with pressure transmitters. Integral 5-valve manifolds shall be supplied with differential pressure transmitters. The manifolds shall be fabricated of 316 SS. These manifolds shall be manufactured by Anderson Greenwood or Buyer approved equal.

4.1.3 Enclosures, Panels, Cabinets, and Racks

In areas where radioactive contamination is likely, only stainless steel enclosures, panels, and cabinets shall be used.

The Rack structural components and all mounting material shall be constructed entirely with stainless steel. This includes bolts, nuts, washers, screws, retainer springs, and clips.

4.2 Prohibited Materials

Mercury containing instruments or devices such as mercury wetted switch contacts; mercury thermometers or capillary systems using mercury shall not be used.

4.3 Special Requirements

Where a conduit enters a junction box, a bushing shall be provided to protect the wire insulation from damage due to sharp metal edges.

4.4 Painting Requirements

In general, instrument manufacturer's standard painting color and finish shall apply. However, Supplier shall also follow the project Shop applied special protective coating as required by the parent specification.

4.5 Storage of Special Materials

The Supplier shall cover or plug all openings on equipment, tubes, pipes, and instruments prior to shipment and/or for storage.

5 Fabrication

Platforms, ladders, or other means of access shall be provided for instrumentation or components that require maintenance or adjustment which are not accessible from a floor or a major structure.

8 Identification

8.1 Nameplate

Each instrument shall have nameplate information that includes following:

Applicable to ALL Instrumentation

- Manufacturer's Name
- Manufacturer's model and serial number
- Buyer's Purchase Order No.
- Buyer's Item No.
- Buyer's Tag Number

Applicable to PROCESS Instrumentation

- Nominal Pipe size, inches
- Body material
- Size
- Minimum and Maximum flowrate
- Meter Factor
- Pressure and Temperature rating
- Flow direction arrow and/or words IN and OUT on the piping connections

Applicable to ELECTRONIC Components

- Power rating
- Electrical Area Classification
- Approvals and Listings per NEC

Where the combination of manufacturer's standard nameplate and instrument body stampings are unable to accommodate all of the required and applicable information, a separate stainless steel nameplate shall be provided to include the Buyer's tag number, PO number, and all of the applicable missing information. This separate stainless steel nameplate shall have the information impressed, stamped, or etched directly on the stainless steel surface. The nameplate, where physically possible, shall be secured to the body of the instrument by corrosion resistant screws tapped into a low stress area of the assembly, so the structural integrity and functional capability of the assembly are not impaired. If it is not physically possible to secure the nameplate to the body of the instrument, then the nameplate shall be attached using a stainless steel wire.

8.2 Panel Mounted Instrument Nameplate

In addition to the nameplate requirements for instruments, each panel mounted instrument shall be identified by tag number (Buyer provided tag number) engraved as specified in section 3.6.8. Letter shall be a minimum of 1/8 inch in height. Nameplates shall be attached as specified in section 3.6.8.

10 Training

Then Supplier shall include training courses and durations as required to train the Buyer's engineering, maintenance and operation personnel in system overview, system architecture, hardware maintenance, software engineering, software maintenance, operation, troubleshooting, etc. for the supplied instrumentation system.

11 Documentation and Submittals

Refer to Part 2, Drawings and Data Requirements of the Material Requisition to which this specification is attached and the following for specific requirement of each instrument.

11.1 Instrument Tagging

Instrument tag numbers will be assigned and provided by the Buyer to the Supplier. The Supplier shall incorporate these tag numbers into the design documents and shall comply with instrument identification requirements.

11.2 Drawings and Data

11.2.1 Instrument Data Sheets

Process instrument data sheet forms will be supplied for some equipment by the Buyer and shall be completed by the Supplier for field mounted process instrumentation.

11.2.2 Instrument List

The Supplier shall provide an equipment instrument list, which lists each instrument and is arranged in numerical order. The fields required are as follows:

- Instrument tag number
- Supplier's referenced tag number if applicable
- Service description
- Instrument type
- Signal type
- P&ID number
- Data sheet number
- Location drawing number
- Instrument installation details
- Manufacturer name
- Model number
- Calibration range of instrument
- Set point
- Wiring diagram number
- Schematic drawing number
- Device address of serial communication link data
- I/O address of serial communication link data
- Shipped loose

In addition, where applicable, a separate list of instruments designated as Safety Significant shall be maintained and provided. See Section 3.1.14 for detailed information.

The list shall include:

The performance specifications for normal operation and under conditions existing during and following accidents.

The load, pressure, voltage, frequency, and other characteristics, as appropriate, for which the performance specified can be ensured.

11.2.3 Panel, Cabinet, Enclosure Outline and Dimensional Drawings

Outline and dimensional drawings shall show the size and location of electrical, pneumatic and service connections and information necessary to locate and mount the equipment, if it is to be mounted by the Buyer.

A dimensional layout drawing shall show the location of electrical and control equipment. This drawing will include the dimensioned outline of the required electrical working space boundary around electrical and control enclosures. Electrical and control equipment enclosures shall be installed so that they comply with NFPA 70-1999, section 110-26 and sections 110-32 through 110-34. Include the working space boundary required for all outward facing (facing out from the skid) electrical and control enclosures.

The outline and dimensional drawings shall also include the enclosure weights and approximate location of the enclosure center of gravity with all instruments and components installed. This drawing or a separate drawing shall include dimensional and material information for the enclosure base, including bolt location and size for permanent attachment of the enclosure(s) to the building structure.

Outline and dimensional drawings shall be provided for all instruments shipped loose for Buyer's installation. The drawing shall include the instrument tag number.

11.2.4 Installation Details

Deleted

11.2.5 Wiring Diagrams

Point to point wiring diagrams provided by the Supplier shall include, but not be limited to the following features:

- Identify all devices with the Buyer's tag numbers, where applicable
- Identify grounding method for incoming cable shields
- Be relative to the equipment or panel terminals
- Show devices and their terminals in relative location
- Include contact developments for control switches, pushbuttons and relays.

11.2.6 Electrical Schematics

Schematics shall be provided for all motor controls. Motor Control Center interfaces with Supplier's provided motors shall be clearly shown with all wiring interfaces shown in schematic form.

11.2.7 Instrument Loop Diagrams

Loop diagrams depicting the wiring between components of electronic analog loops and discrete (on/off) loops shall be provided. These drawings shall contain, as a minimum all the information required by ISA S5.4 Figure 3 with notes and drawing references. The interface between Supplier's and Buyer's equipment, wiring and instruments shall be shown in detail, including terminal and wire identification. Electronic loop diagrams shall show Supplier's grounding and shielding provisions.

In the case of bussed network instruments, network segment drawings shall be provided in lieu of loop diagrams.

11.2.8 Pneumatic Piping or Interconnection Diagram

Diagrams depicting the signal tubing and air source interconnections between pneumatic devices shall be provided. The interface between the Supplier's and the Buyer's devices and air source shall be shown in detail.

11.2.9 Control Diagrams

Control diagrams consisting of schematics showing the equipment functional controls shall be provided for the Buyer's review. These drawings shall show in detail all the control circuits and their relationship with other components within the Supplier's package and the interface between the Buyer and Supplier provided controls. If the Buyer is to implement the Supplier's control on a Buyer provided control system, the controls necessary to operate the Supplier's equipment will be based upon these drawings.

11.2.10 Software Documents

Documentation as defined within this specification shall be provided. These will be used for the design development, quality assurance, verification review, approval, and validation testing of all the software supplied by the Supplier and/or its subcontractor. They shall be in accordance with all the requirements depicted in this specification and industrial standards.

11.2.11 Cable Block Diagrams

Cable Block diagrams shall identify the relationship of all cabling with cable numbers that interconnect between panels, junction boxes and components. These diagrams shall identify the size and number of conductors in each cable. Preliminary versions of these diagrams shall be made available for 50% design review. The formal submittal shall be submitted prior to fabrication. Cables that will be provided and installed by the Buyer will be identified on the cable block diagram. The Supplier shall identify at the 50% design review the equipment breakdown for shipping that identifies those cables that need disconnecting for shipment. The Buyer will provide tag numbers for all junction boxes and panels that the Buyer has to terminate to.

11.2.12 Manufacturer's Technical Literature

The Supplier shall provide manufacturer's technical literature for all technical components and instrumentation provided within the Supplier's package.

11.3 Procedures

11.3.1 Site Storage and Handling Procedure

The Supplier shall provide site storage and handling procedures in accordance with Part 2 of the Material Requisition to which this specification is attached. Procedures shall be issued to the Buyer nine-months prior to shipment. One copy of the procedure shall be attached to each shipping container. The Supplier is responsible for stipulating any site storage requirements necessary to maintain any implied or stated equipment warranty including shelf life for spare parts. Refer to Engineering Specifications for Packaging, Handling, and Storage Requirements, 24590-WTP-3PS-G000-T0003 for additional requirements.

11.3.2 Functional Test Procedure

The Supplier shall submit equipment functional test procedures that will be used to demonstrate to the Buyer's satisfaction that the equipment will function in accordance with the specified requirements. Procedures shall be submitted for the Buyer's review in accordance with the Part 2 of the Material Requisition to which this specification is attached. Procedures shall be submitted at

least one month prior to scheduled performance of the functional demonstration to be witnessed by the Buyer's engineer(s). Scope of these tests shall be agreed to between the Buyer and Supplier via review of the proposed test procedure.

The functional test procedure shall include:

- Requirements for maintaining records of functional tests
- Description of method used to track status of testing
- Requirements for inspection prior to testing to determine test readiness
- Procedures for documenting failures and errors encountered
- Procedures for documenting agreed test modifications or procedure corrections deemed necessary to resolve a test finding
- Method of documenting final resolution of test anomalies
- Acceptance criteria

11.3.3 Operating, Startup and Shutdown Procedures

The Supplier shall provide procedures in hard copy as well as in electronic describing the method of starting, operating and shutting down the equipment package.

11.4 Calculations

Calculations shall be submitted for the Buyer's verification as indicated in Part 2, Drawings and Data Requirements, in the Material Requisition to which this specification is attached. Calculations shall be orderly, complete, and sufficiently clear to permit verification.

The body of the calculation shall include:

- A concise statement of the purpose of the calculation
- Input data, applicable criteria, and stated assumptions
- A list of references used, including drawings, codes, standards, and computer programs, indicate the version or issue date
- A discussion of the rationale used for design assumption basis
- Equations used for all computations
- Numerical calculations, including identification of units used
- A concise statement addressing the calculation results and/or recommendations
- A table of contents for complex calculations.

11.4.1 Electrical Load

The Supplier shall submit calculations showing the electrical power consumption, both peak and continuous for each power voltage level required by the Supplier to operate all equipment and instruments provided.

11.4.2 Heat Loads

The Supplier shall submit a list of all calculated and estimated control panel/cabinet heat loads.

11.4.3 Instrument and Service Air Consumption

The Supplier shall submit calculations showing the instrument and service air consumption both peak and continuous. The submittal shall identify instrument and service air consumption separately.

11.4.4 Sizing Calculations

The Supplier shall provide, for review and approval, the sizing calculations used to size modulating control valves per ISA S75.01, head producing flow elements, and pressure relieving devices per API RP 520 PT I.

11.5 Manuals

Operation and maintenance (O&M) manuals in both hard copy and electronic form shall be provided for the equipment package. The O&M manual shall include startup, operating and shutdown procedures as well as periodic and preventative maintenance procedures. The requirements for the package O&M manuals are contained in the Material Requisition.

11.6 Schedules

11.6.1 Material Schedule

A schedule of material listing all instruments and devices to be located on or supplied with the equipment package shall be provided. The schedule or bill of material shall contain the Buyer's tag numbers where applicable, manufacturer, model number, part number, description, quantity and brief material description.

11.6.2 Spare Parts List

The Supplier shall submit a recommended spare parts list covering all items within the Supplier's scope. The spare parts recommendation shall be based upon Supplier's experience with component failure, maintenance requirements, environmental conditions, as well as consideration of the total quantities of each device supplied by the Supplier. The Supplier's recommendation shall include both construction/commissioning and operating spares. Construction/commissioning spare parts are those parts to be held for use during construction, testing, and commissioning. Operating spare parts are those to be held for the first year of operation of the plant.

APPENDIX A-1 Sensing Line Process Connection Orientation

MEASURED VARIABLE	LINE FLUID: LIQUID	LINE FLUID: STEAM VAPOR OR SLURRY	LINE FLUID: AIR OR GAS
FLOW			
PRESSURE OR DIFFERENTIAL PRESSURE			
ANALYSIS	LIQUID:	STEAM, VAPOR, AIR, OR GAS:	
TEMPERATURE	ALL FLUIDS: NOTE: THIS ORIENTATION FOR TEMPERATURE INSTRUMENTS WILL NOT APPLY IF THE PIPE DIAMETER IS SMALL AND REQUIRES A TEE OR ELBOW TO BE USED.	**INSTRUMENTATION: MEASURED VARIABLE TAPPING POINTS ORIENTATION**	

ATTACHMENT EKP0

LAW TCO CUSTOMIZED EKP0

Per 24590-WTP-3PS-EKP0-T0001, Rev. 5
ENGINEERING SPECIFICATION FOR ELECTRICAL REQUIREMENTS FOR PACKAGE SYSTEMS

This attachment defines the requirements for electrical equipment, materials and installation associated with the Low Activity Waste Thermal Catalytic Oxidizer/Reducer (LAW TCO), which are provided as manufacturer standard or custom design and pre-assembled units, in accordance with the National Codes and Industry Standards. For continuity, the section numbers from the specification noted above have been retained.

1.7 Work by Others

1.7.3 Power Supply

The Buyer will provide normal power and/or Uninterruptible Power Supply (UPS) for the Supplier's instruments unless otherwise specified on the parent specification. Each source will be delivered at 120 VAC, single phase, 60 Hz, grounded system. 480 VAC, 3 phase, 60 Hz power will be provided as required for motors. All other voltages required by the Supplier shall be derived from the Buyer provided 120 VAC or 480 VAC.

2.0 Criteria for Acceptability of Electrical Equipment

- All electrical equipment for facility and equipment wiring, as defined by the National Electrical Code NFPA 70-1999, shall be Approved. Approval will be in accordance with Article 90-4, "Enforcements", Article 90-7, "Examination of Equipment for Safety," and Article 110-3, "Examination, Identification, Installation, and Use of Equipment."
- Approved means "Acceptable to the Authority Having Jurisdiction" (AHJ), as defined in Article 100 of NFPA 70-1999. Only the WTP Electrical AHJ can provide the approval.
- "Equipment" is defined by the NFPA 70 as, "A general term including material, fittings, devices, appliances, fixtures, apparatus, and the like used as a part of, or in connection with an electrical installation". As used here, the entire mechanical assembly is not considered an electrical installation, only the electrical and/or electronic components, and the interconnecting wiring.
- Listing and labeling by an OSHA Nationally Recognized Testing Laboratory (NRTL) is the primary means (Method 1 below) of obtaining WTP AHJ approval for electrical equipment, devices and materials.
- All Control Panels shall be UL labeled by a certified UL 508A shop.
- Electrical Equipment that is installed on (standard or custom fabricated) Mechanical Equipment shall comply with the requirements stated above.
- Electrical Equipment, that is part of Mechanical Packaged Equipment, where the entire mechanical skid is field-evaluated and Labeled at the factory by an NRTL is an alternate method of obtaining WTP AHJ approval.

2.1 Method 1 (Primary): Listed, Labeled or Certified (i.e. UL508A)

2.1.1 The WTP AHJ shall approve and accept electrical equipment without additional examination if it is Listed, Labeled, or Certified by a US NRTL, as recognized by OSHA under 29 CFR 1910-Subpart S and is acceptable for the application, environment and other requirements of NEC Article 110. For a listing of and Typical Registered Certification Marks of US NRTL's recognized by OSHA go to http://www.osha.gov/dts/otpca/nrtl/nrtlmrk.html.

2.2 Method 2 (Alternate): Field Evaluation by a NRTL

2.2.1 Electrical equipment that is part of an overall electrical or mechanical assembly having a NRTL safety evaluation or a field evaluation, which states the equipment has been accepted or otherwise deemed safe by the NRTL recognized by OSHA under 29 CFR 1910-Subpart S, using US standards, will be evaluated by the WTP AHJ for acceptability. If found acceptable no further examination of the equipment is required. The Supplier shall submit the NRTL safety/field evaluation report, or evidence of compliant labeling/listing of electrical equipment including UL 508A certification/labeling of control panels for the Buyer's Electrical AHJ review and approval prior to having the equipment released for shipment.

2.2.2 The Supplier shall submit all field evaluation reports completed by an OSHA recognized NRTL to the Buyer for review and approval by the AHJ. These field evaluation reports shall show compliance to the applicable USA Electrical Standard(s) recognized by OSHA that are listed on the OSHA website http://www.osha.gov/dts/otpca/nrtl/allstds.html. The NRTL Label will be as shown on the OSHA website with whatever additional markings that are necessary to indicate acceptability for use in the USA http://www.osha.gov/dts/otpca/nrtl/nrtlmrk.html.

2.2.3 The Supplier shall submit a Certificate of Compliance (C of C) document for review and approval by the AHJ that lists the USA Electrical Standard(s) that each electrical material or equipment is evaluated to for it's NRTL Listing. Only those standards that are listed on the OSHA website http://www.osha.gov/dts/otpca/nrtl/allstds.html are acceptable to the AHJ. The certification shall confirm that the NRTL Label for each electrical component will be as shown on the OSHA website including the additional markings required to indicate acceptability for use in the USA http://www.osha.gov/dts/otpca/nrtl/nrtlmrk.html.

2.3 If the Supplier is unable to meet the criteria in Method 1 or Method 2, the Supplier shall request in writing a variance by the Buyer's Electrical AHJ.

3.0 Applicable Documents

3.1 Codes and Standards

The equipment and installation shall conform to the applicable sections of the following National Codes and Industry Standards:

29 CFR 1910,	Occupational Safety and Health Standards, Electrical Sub part S
NFPA 70-1999	National Electric Code (NEC)
ANSI C80.1	Rigid Steel Conduit – Zinc Coated (GRC)
IEEE 383-1974	Standard for Type Test of Class 1E Electric Cables, Field Splices, and Connections for Nuclear Power Generating Stations *(Only Section 2.5 - Flame Tests, shall be applicable.)*
IEEE 515	Standard for Testing, Design, Installation and Maintenance of Electric Resistance Heat Tracing for Industrial Applications

IEEE 1202	Standard for Flame Testing of Cables for Use in Cable Tray in Industrial and Commercial Occupancies
NEMA ICS-1	Industrial Control and Systems General Requirements
NEMA ICS 6	Enclosures for Industrial Controls and Systems
NEMA RN1	Polyvinyl Chloride (PVC) Externally Coated Galvanized Rigid Steel Conduit and Intermediate Metallic Conduit
UL 6	Standard for Safety Electrical Rigid Metal Conduit - Steel
UL 6A	Standard for Safety for Electrical Rigid Metal Conduit - Aluminum, Red Brass, and Stainless Steel
UL 13	Standard for Power-Limited Circuit Cables
UL 2250	Standard for Safety Instrumentation Tray Cable
UL 44	Standard for Safety Thermoset Insulated Wires and Cables
UL 360	Standard for Safety Liquid Tight Flexible Steel Conduit
UL 508	Standard for Safety Industrial Control Equipment (17th Edition)
UL 514B	Standard for Safety Conduit, Tubing, and Cable Fittings
UL 1581	Safety Reference Standard for Electrical Wires, Cables, and Flexible Cords
UL 1666	Safety Test for Flame Propagation Height of Electrical and Optical-Fiber Cables Installed Vertically in Shafts
NEMA WC 55	Instrumentation Cables and Thermocouple Wire - ICEA S-82-552
NEMA WC 57	Standard for Control Cables - ICEA S-73-532
NEMA WC 70	Non-shielded Power Cables Rated 2000 Volts or Less for the Distribution of Electrical Energy - ICEA S-95-658
NFPA 262-2002	Standard Method of Test for Flame Travel and Smoke of Wires and Cables for Use in Air-Handling Spaces

3.2 WTP Project Specifications

24590-WTP-3PS-JQ00-T0004 Management of Supplier Software

3.3 Nuclear Standards for Equipment Classified as Q

In addition to the above, when required for complying with the nuclear standards for SC and SS equipment or components, the Supplier shall follow the version as called out in this specification.

Deleted	
IEEE 383-1974	Standard for Type Test of Class 1E Electric Cables, Field Splices, and Connections for Nuclear Power Generating Stations
Deleted	
IEEE 1023-1988	Guide for the Application of Human Factors Engineering to Systems, Equipment, and Facilities of Nuclear Power Generating Stations
ASME NQA-1	Quality Assurance Program Requirements for Nuclear Facilities -2000 (not applicable to this LAW TCO procurement)

3.4 Reference Documents/Drawings

Specification	Title
24590-WTP-3PS-MUMI-T0001 *(As applicable)*	Engineering Specification for Medium Voltage Induction Motors
24590-WTP-3PS-MUMI-T0002	Engineering Specification for Low Voltage Induction Motors
24590-WTP-3PS-EVV1-T0001 *(As applicable)*	Engineering Specification for Low Voltage Adjustable Speed Drives
Addendum JQ07	Engineering Addendum for Instrumentation for Package Systems
24590-WTP-3PS-JQ06-T0005 *(As applicable)*	Engineering Specification for Environmental Qualification of Control and Electrical Systems and Components

4.0 Design Requirements

•4.1 General

4.1.1 The Buyer will provide electrical service at the following voltages for Supplier's system, as applicable.

4.1.1.1 Medium voltage:

••13.8 kV, 60 Hz, 3 phase, 3 wire, low resistance grounded neutral, with the ground fault current limited to 2000 amps.

4.1.1.2 Low voltage:

••480 V, 60 Hz, 3 phase, 3 wire, solidly grounded

••208 V / 120 V, 60 Hz, 3 phase, 4 wire, solidly grounded

••120 V AC, 60 Hz, 1 phase UPS

5.0 Construction

•5.1 Motor Starters and Control

Unless otherwise stated in the primary specification, motor starters for 460 V, 3 phase motors ½ Hp and larger will be provided by the Buyer and installed remotely from the packaged unit. However, special consideration will be given to packages in which the provision of motor starters by the Supplier may be beneficial. When furnished with the packaged unit, the starters shall have the following configuration. Starter units with electronic overload shall only be used for Non-Safety applications. Electromechanical starters can be furnished for both Non-Safety and Safety applications.

5.1.1 Motor Starters with Electronic Overload

5.1.1.1 Motor starters with electronic overload protection can be supplied for SSCs classified as RRC, or Non-Safety, (i.e. CM quality level). (Note: Siemen # Simocode 3UF50 protection device is used in the Buyer's MCCs and is preferred.)

5.1.1.2 Combination starters shall be equipped with a pad-lockable disconnecting means, a magnetic contactor, a dedicated control power transformer (CPT), and a motor overload protection device.

5.1.1.3 Control panels with multiple starters may have a common disconnecting means and CPT.

5.1.1.4 When the motor control is designed for local and remote modes of operation, local controls shall be operable from the starter or control panel door, and remote control signals will be provided through the Buyer's communication network.

5.1.1.5 When furnished, the following local controls shall be available at the starter or control panel door:

1. Start/Stop function (pushbuttons or selector switch)
2. Local/remote selector switch (when local/remote mode is specified)
3. Trip reset
4. Indicating LED for Status (Green - motor stopped, Red - motor running, Amber - motor tripped)

5.1.1.6 When furnished, the electronic overload protection shall include the following features available for remote mode operation through the Buyer's communication network:

1. Start/Stop capability
2. Trip reset
3. Status indication (motor stopped, run and tripped)
4. Current monitoring of all three phases
5. Programmable parameters for the protective functions
6. Diagnostic information
7. Control voltage status
8. Other functions if available in the relay
9. Communication port to interface with the Buyer's Profibus communication network

5.1.2 Motor Starters with Thermal Overload Relay

5.1.2.1 Motor starters with thermal overload relays shall be supplied for SSCs classified as SC or SS, (i.e. QL-1 or QL-2 quality level). The Supplier may also provide thermal overload relays for SSCs classified as Non-Safety upon the Buyer's approval.

5.1.2.2 Each motor starter unit shall consist of a pad-lockable disconnecting means, a dedicated control power transformer (CPT), and a magnetic contactor with thermal overload relay including, but not limited to the following features:

1. Start/Stop function (pushbuttons)
2. Local/remote selector switch (when local/remote mode is specified)
3. Thermal overload relay (Class 20)
4. Trip Reset
5. Indicating LED for Status (Green - motor stopped, Red - motor running, Amber - motor tripped)
6. Two sets of contacts for the remote position of the selector switch shall be wired to terminal blocks for the Buyer's use
7. Spare main contactor auxiliary dry contacts (1 NO, 1 NC minimum) wired to terminal blocks for the Buyer's use

8. Auxiliary contact (1 NC) of overload relay shall be wired to terminal blocks for the Buyer's use.

9. Terminal blocks with approximately 20% spare terminals.

5.1.3 Space Heater

Where motors are supplied with space heaters, the CPT shall be sized to be the power source, and a dedicated control contact for the heater shall be provided and wired.

5.1.4 Local Disconnects

Where required, local disconnecting means shall be provided in accordance with section 430-102 and 430-113 of NFPA 70-1999.

5.1.5 Emergency Stop and Reset

Control panel for operating machinery shall be provided with an emergency stop (E-stop). Local emergency stop push buttons shall be provided on equipment where physical injury is credible. The emergency stop push button shall be readily identifiable and when depressed, shall remain depressed until it is manually reset. A spare contact shall be available for the Buyer's use. Emergency stop shall be hard-wired to the motor controller.

5.3 Power Protection and Disconnecting Means

5.3.1 Disconnecting means

Enclosures with incoming power supply shall have a manually actuated disconnecting means mounted on or close to the enclosure in an easily accessible location.

5.3.2 Overcurrent Protection

Devices in panels utilizing power shall have suitable overcurrent protection. Power shall not be "daisy chained" from device to device; however, bridge or comb jumpers may be used on the supply side of the circuit breaker or a fuse block.

5.5 Cables and Wiring

5.5.1 The Supplier shall mount, connect and wire each instrument or control device such that adjustment, maintenance, removal and replacement may be accomplished in a safe manner without interruption of service to adjacent but non-associated equipment, and without placing undue stress on installed wiring or devices. Accommodations for strain relief shall be made when routing wire to hinged enclosure doors and shall be wrapped with spiral wire wrap.

5.5.2 Other than the special cables furnished by the Supplier, cables shall be in accordance with the following:

a) Low voltage power and control cables shall be stranded copper, 600 V type XHHW-2 or Buyer-approved equivalent.

b) Internal wiring shall be stranded copper, flame-retardant, 600 V, synthetic heat resistant (SIS), or machine tool wire (MTW), or high-flexible thermoset.

c) The minimum size of conductor will be as follows (not including cabling integral to components):

Duty	External Conductor Size (AWG)	Internal Wiring in enclosures Size (AWG)
Power and Lighting (480 V and below only)	12	14

Current Transformer Wiring	10	10
Control Circuits (120 V AC / 125 V DC) and Instrument power circuits	14	16

5.5.3 Inter-connecting wiring or cabling for packaged units furnished by the Supplier, shall be terminated and tested according to this specification.

5.5.3.1 No more than two wires shall be connected to one terminal point if rated for more than one wire. Internal wiring shall be continuous from terminal to terminal without splices (except devices with pig tails). Bridge or comb jumpers are preferred to wire jumpers on terminal strips. Jumpers shall not be installed on field side of the terminal strip.

5.5.3.3 Circuits of different voltages (service level) shall be terminated on physically separate terminal strips and clearly labeled to show the circuit voltage. Terminal blocks shall be segregated according to signal type. In the event safety instrument system components are included in an enclosure, the wiring shall be clearly identified and segregated from non-safety instrument system circuits.

5.5.3.4 AC power shall be routed through separate wireways or separated with a divider from 24 VDC discrete and analog instrument signals within enclosures. Power and signal cabling shall not be run in parallel, except in separate wireways, and should cross at a 90-degree angle only.

5.5.3.5 Wires shall be tagged with the Supplier's cable designation number at both ends with (heat shrinkable or non-shrinkable) plastic sleeve type wire markers.

5.5.4 The Supplier shall furnish terminal boxes or control panels as follows:

5.5.4.1 Instrumentation cables shall be terminated in separate junction boxes from the power and control cables.

5.5.4.2 Where cables supplied and installed by the Buyer are run to the package unit, the Supplier shall provide space for installing and terminating the cables.

5.5.4.3 Approximately 25% of spare terminals shall be included in the terminal blocks.

5.5.5. Wiring for electronic, instrument, communication and signal cables shall be segregated from both power and control cables.

5.5.6 Terminal blocks shall be selected to accommodate the function and electrical requirements associated with each wiring application. They shall incorporate the following features:

a) Screw clamp wire connection
b) Single level configuration
c) Integral test points
d) DIN-rail mounted

5.6 Raceway System

5.6.1 Conduit System

5.6.1.1 Wiring shall be installed in metal conduit. Minimum conduit size shall be ¾ inch. ½ inch conduit is allowed when connecting to devices with ½ inch hubs.

5.6.1.2 Liquid-tight flexible metallic conduit shall preferably be used to isolate the transmission of vibration to the conduit system, and for connection to equipment which may be periodically removed.

5.6.1.3 Liquid-tight flexible metallic conduit shall be supported within 12 inches of each box, cabinet, conduit body, or other conduit termination and shall be secured at intervals not to exceed 4½ ft.

5.6.1.5 Conduit connections to junction boxes shall be made using watertight threaded hubs or factory threaded hubs.

5.6.4 Enclosures shall be designed for front access only unless otherwise specified. All components and equipment in enclosure shall be accessible and removable from the front. Enclosures shall be suitably rated for the environment specified.

5.7 Grounding

5.7.1 Non-current carrying metallic parts of electrical equipment shall be bonded together and made electrically continuous. Two grounding pads shall be furnished at diagonally opposite corners at the edge of skids for connection by the Buyer to the area ground grid.

5.7.2 Electrical equipment on the packaged unit shall be bonded to the package unit skid.

9.0 Documentation and Submittals

- **9.1 General**

The Supplier shall furnish the following documents as per form G-321E and G-321V in the subcontract or primary mechanical packaged equipment material requisition or purchase order (all drawings and data shall be in U.S. units):

9.1.1 Functional description of the electrical operation of the package.

9.1.2 Overall Single line diagram showing all electrical equipment.

9.1.3 Overall layout showing location of electrical items.

9.1.4 Interconnection diagram and cable schedule showing details of all internal connections and Buyer external connections. The Supplier's furnished cable schedule shall include service voltage and Class of Circuit per NEC Articles 725, 760 and 800 for each cable.

9.1.5 Individual equipment schematic diagrams, wiring diagrams, general arrangement drawings, foundation details and junction/terminal box details.

9.1.6 Material list with specific model number, manufacturer and catalogue cut sheets shall be submitted as part of the product data.

9.1.7 The SELLER shall include a list of all the electrical loads in the package, their individual consumption (in kW) and voltage level (in volts).

9.1.8 Recommended Spare Parts List

9.1.8.1 The Supplier shall provide a list of recommended spare parts as follows:

a) Startup/warranty spare parts – are those parts that may be required at any time during equipment installation, startup, testing and unit operation through the warranty period.

b) Operational spare parts – are those parts that required replacement at regular intervals to maintain continuous operation of the supplied equipment and/or system.

c) Capital spare parts – are major parts or equipment that provide reliable equipment operation throughout the plant life and having a significant lead time for manufacturer and delivery.

9.1.8.2 The spare parts list shall include pricing and delivery information valid for one year after delivery of the equipment.

9.1.9 Test reports as required by the primary specification.

9.1.10 In addition to the above, when required for complying with the nuclear standards for SS equipment or components, the Supplier shall submit the qualification documentation as required by the primary specification, material requisition and purchase order.

ATTACHMENT NN00

LAW TCO CUSTOMIZED NN00

Per 24590-WTP-3PS-NN00-T0001, Rev. 2
ENGINEERING SPECIFICATION FOR THERMAL INSULATION FOR MECHANICAL SYSTEMS

This attachment defines the minimum thermal insulation requirements for piping and mechanical equipment associated with the Low Activity Waste Thermal Catalytic Oxidizer/Reducer (LAW TCO) where insulation is specified on drawings, specifications, data sheets, and associated lists. This attachment does not address insulation that is designated as "Safety" or quality level 1 or 2, nor does it cover proprietary tank insulation systems, cryogenic insulation systems, or the insulation of furnaces and buildings. For continuity and maintaining configuration control, the section numbers from the specification noted above have been retained.

1.3 Material and Services Required

SELLER shall provide all insulation materials with associated cements, compounds, jacketing, fasteners/securements, personnel protection guards, and other necessary items for complete insulation systems as defined herein, as well as all services necessary for complete installation of insulation on piping and equipment identified on specified drawings, specifications, data sheets, and lists.

1.4 Conflicts

Instructions on specified equipment drawings and piping isometric drawings, including notes, shall supersede any conflicting requirements of this specification. At the time of quotation, the BUYER shall be notified of all conflicts between this specification and any other documents such as the referenced codes and standards, P&ID, or other procurement documents. Discrepancies, errors, or omissions shall be resolved in writing with the BUYER before the work is started.

2.0 Applicable Documents

Work shall be done in accordance with the referenced codes, standards, and documents listed below, which are an integral part of this specification. When specific chapters, sections, parts, or paragraphs are listed following code, industry standard, or reference document, only those chapters, sections, parts, or paragraphs of the document are applicable and shall be applied. If a date or revision is not listed, the latest issue, including addenda, at the time of Request for Quote (RFQ) shall apply. When more than one code, standard, or referenced document covers the same topic, the requirements for all must be met with the most stringent governing.

2.1 American Society for Testing and Materials (ASTM)

A 240 Standard Specification for Heat Resisting Chromium and Chromium-Nickel Stainless Steel Plate, Sheet, and Strip for Pressure Vessels

B 209 Standard Specification for Aluminum and Aluminum-Alloy Sheet and Plate

C 167 Standard Test Methods for Thickness and Density of Blanket or Batt Thermal Insulations

C 195 Standard Specification for Mineral Fiber Thermal Insulating Cement

C 302 Standard Test Methods for Density of Preformed Pipe Covering Type Insulation

C 303 Standard Test Method for Density of Preformed Block-Type Thermal Insulation

C 449 Specification for Mineral Fiber Hydraulic-Setting Thermal Insulating and Finishing Cement

C 533 Standard Specification for Calcium Silicate Block and Pipe Thermal Insulation

C 547 Standard Specification for Mineral Fiber Pipe Insulation

C 552 Standard Specification for Cellular Glass Thermal Insulation

C 585 Standard Practice for Inner and Outer Diameters of Rigid Thermal Insulation for Nominal Sizes of Pipe and Tubing

C 592 Standard Specification for Mineral Fiber Blanket Insulation and Blanket-Type Pipe Insulation (Metal-Mesh Covered)(Industrial Type)

C 610 Standard Specification for Expanded Perlite Block and Pipe Thermal Insulation

C 612 Standard Specification for Mineral Fiber Block and Board Thermal Insulation

C 692 Standard Test Method of Evaluating the Influence of Wicking-Type Thermal Insulations on the Stress Corrosion Cracking Tendency of Austenitic Stainless Steel

C 795 Standard Specification for Wicking-Type Thermal Insulation for Use Over Austenitic Stainless Steel

C 871 Standard Test Methods for Chemical Analysis of Thermal Insulation Materials for Leachable Chloride, Fluoride, Silicate, and Sodium Ions

C 1136 Standard Specification for Flexible, Low Permeance Vapor Retarders for Thermal Insulation

D 312 Standard Specification for Asphalt Used in Roofing

2.2 Process Industry Standards

INIH1000 Hot Insulation Installation Details

2.3 Occupational Safety and Health Administration

29 CFR 1910.144 Safety Color Code For Marking Physical Hazards

29 CFR 1910.1200 Hazard Communication

3.0 General Requirements

3.1 Insulation Systems

The following insulation codes are used to identify the functions of thermal insulation on mechanical pipe and equipment:

- Hot services
  - HC: heat conservation
  - PS: process stability
  - PP: personnel protection
  - HF: hot and fire protection
  - PG personnel protection guards
- No insulation
  - NI: no insulation

Insulation for cold services shall be cellular glass. Contraction joints and a vapor barrier covering are not required for cellular glass. Joint sealant shall be used in all insulation joints and to provide vapor stops at insulation terminations.

Insulation for hot services shall be as follows:

- Vertical Equipment
  - Shell mineral fiber semi-rigid board
  - Top head expanded perlite block, or calcium silicate
  - Bottom head mineral fiber blanket
- Horizontal Equipment
  - Shell expanded perlite block, or calcium silicate
  - Heads mineral fiber blanket
- Piping
  - All surfaces expanded perlite block, or calcium silicate

Cellular glass, mineral fiber, or calcium silicate materials may be used for hot services, if approved by the BUYER, but only in the allowable temperature ranges specified in Section 4.2.

The Component Information System (CIS) and associated lists identify the appropriate insulation function code(s) for piping. Piping isometric drawings show the extent of insulation for piping and associated components. Equipment general arrangement drawings and equipment data sheets specify the extent of insulation for equipment. Piping and instrument diagrams (P&IDs) indicate where insulation is required.

If several insulation function codes are applicable, the most stringent requirements shall govern. For example, surfaces above 140°F that can be readily touched by operating or maintenance personnel require personnel protection (code PP). Where other insulation functions may be specified, the most stringent thickness requirement shall apply. In situations where insulation is not practical or appropriate, expanded metal guards (designated as code PG) shall be used for personnel protection rather than insulation.

All thermal insulation shall be protected by aluminum or stainless steel sheet metal jacketing unless specified otherwise. Jacketing shall support the insulation, protect it from damage, and provide weather protection (prevent ingress of water).

3.2 Extent

Removable and reusable insulation should be used in areas requiring periodic access for maintenance.

PP insulation shall be used on surfaces that are accessible to personnel if the maximum temperature exceeds 140°F, with guards (code PG) installed where insulation is not practical or appropriate. Accessible areas include those where personnel perform anticipated operations or maintenance, and include surfaces up to 7 ft above grade, floors, or platforms, and 3 ft horizontally from the periphery of platforms, walkways, or ladders.

Table 3.2 defines the extent of thermal insulation for other function codes.

Table 3.2, Extent of Insulation for Functions Other Than AS and PP

Surfaces to be Insulated	Insulation Function Codes		
	HC	PS	HF, ET, ST, PF
Straight or bent pipe; socketweld, threaded or buttweld pipe fittings, and valves.	YES	YES	YES
Pipe unions	NO[2]	NO[2]	NO[1]
Steam traps, related strainers	NO[2]	NO[2]	NO[1]
Flanged valves (except relief and control valves), flanged orifice sets, piping flanges connected to equipment nozzles	YES[3]	NO[1,3]	YES[3]
Primary piping for instrument connections, sample piping, vent and drain piping.	NO[1]	NO[1]	YES
Expansion or rotation joints, slide valves, etc.	NO[2]	NO[2]	YES[3]
Instruments and associated tube	NO	NO	YES
Relief valves	NO	NO	NO
Control valves, flanged pipe fittings	NO[1,3]	NO[1,3]	YES[3]
Tee and inline strainers	NO[1,3]	NO[1,3]	YES[3]
Heat exchangers, shell side, tube side, excluding body flanges	YES	YES	NA
Heat exchanger body flanges	NO[1,3]	NO[1,3]	NA
Pump casings	NO[1,3]	NO[1,3]	YES[3]
Compressors	[3]	NO[1]	NA
Blowers, fans	[3]	YES[2]	NA

[1] Insulate or guard only where required for personnel protection.
[2] Provide removable metal guards or barriers where required for personnel protection.
[3] Removable and reusable covers should be considered.
[4] Insulation should not be used in inaccessible areas where maintenance is infeasible (e.g., high radiation areas).

Removable, reusable insulation shall be used in areas where insulation may be removed more frequently than once every 20 months (e.g., for flanges or other components requiring periodic maintenance).

3.3 Thickness

Insulation shall be applied in one layer with the thickness per Appendix A unless specified otherwise. Insulation thickness depends on the insulation function (insulation code), normal or maximum operating temperature, and item diameter.

4.0 Materials

4.1 General

4.1.1 The BUYER only shall judge equivalency of materials. The SELLER shall submit complete details with any request for substitution or deviation from this specification.

4.1.2 All insulation and non-metallic accessory materials shall contain no asbestos.

4.1.3 All expanded perlite, calcium silicate, mineral fiber insulation, and mineral fiber cement or other proposed substitution products shall be qualified for use on austenitic stainless steel in accordance with ASTM C 795 by conforming to the pre-production test requirements of ASTM C 692 and the confirming quality control requirements for chemical analysis of ASTM C 871.

4.1.4 Deleted

4.1.5 Mineral fiber insulation materials shall have less than 30% cumulative shot content as determined by ASTM C 612 Annex A1. Density of mineral fiber products shall be determined by ASTM C 612, C 302, or C 303, as appropriate. "Delivered density" based on 40% shot content calculated per ASTM C 612 shall not be used.

4.1.6 All mastics, cements, caulks, compounds, kraft paper, and other materials used in insulation systems for stainless steel piping and equipment shall be free of leachable lead, bismuth, zinc, mercury, antimony, cadmium, and tin. The inorganic halogen content shall be less than 200 ppm; sulfur content shall not exceed 400 ppm. The low melting elements mentioned above shall be less than 1 percent by weight with mercury less than 50 ppm.

4.2 Insulation

4.2.1 Table 4.2 lists insulation materials and the allowable temperatures and functions for each material.

Table 4.2, Insulation Materials

Material	Description	ASTM Standard	Allowable Process Fluid Temperatures	Allowable Functions
Calcium Silicate	Block and Pipe Covering	C533	320°F to 1130°F	HC, PS, PP, HF
Cellular Glass	Block and Pipe Covering	C552	-355°F to 320°F	All
Mineral Fiber	Preformed Pipe Insulation	C547	230°F to 1130°F [1]	HC, PS, PP (see Note 1)
Mineral Fiber	Blanket	C592	230°F to 1130°F	HC, PS, PP
Mineral Fiber	Semi-Rigid Board	C612	230°F to 1130°F	HC, PS, PP
Expanded Perlite	Block and Pipe Covering	C610	77°F to 1130°F	HC, PS, PP, HF, ET, ST, PF

[1] Although not preferred, mineral fiber insulation material may be used in cold services (codes AS, ET, ST, and PF) at fluid temperatures down to 32°F with BUYER's approval if suitable ASTM C1136 vapor barriers are provided on all insulation surfaces and vapor stops are provided at insulation terminations to prevent water intrusion.

4.2.2 Mineral fiber board, rigid and semi-rigid, used for vertical equipment surfaces shall meet the requirements of ASTM C 612, Class 4 and be suitable for continuous service at system operating temperatures, and shall have a nominal density of 8 lbs/ft^3.

4.2.3 Mineral fiber blanket insulation used for bottom heads of vertical equipment and heads of horizontal equipment shall meet the requirements of ASTM C 592 Class II with the following exceptions:

- Nominal density shall be 8 lbs/ft^3
- One side shall be faced with stainless steel hexagonal mesh

4.2.4 Molded mineral fiber insulation piping ell covers suitable for operating temperatures may be used for all hot applications.

4.2.5 Expanded perlite block and pipe covering used for all piping, horizontal equipment, and vertical equipment top heads shall meet the requirements of ASTM C 610, Type II only, and shall exhibit water repellency up to a service temperature of 410°F.

4.2.6 Cellular glass insulation shall meet the requirements of ASTM C 552. For operating temperatures above 185°F, fabrication of piping insulation and curved radius segments shall be laminated using gypsum cement, not hot asphalt.

4.2.7 Calcium silicate block and pipe insulation shall meet the requirements of ASTM C 533 Type I and shall be marked continuously to designate that no asbestos is present.

4.3 Insulation Form

4.3.1 Shop-fabricated rigid insulation segments used for all elliptical, conical, torispherical, flanged and dished, or hemispherical top heads of vertical equipment shall be fabricated from cellular glass, rigid expanded perlite block, or calcium silicate. Both inside and outside surfaces shall be cut to match the compound curvature of the head. Each of the four sides shall be machined at the necessary bevel angle and radius to match the adjoining courses. Blocks shall be individually numbered and supplied with an assembly map to indicate the relative location of the numbered pieces.

4.3.2 Curved cellular glass sections used for equipment shells and pipe insulation shall be of a density between 7 and 8 lb/ft^3 in accordance with ASTM C 552, "Cellular Glass Block and Pipe Thermal Insulation". Acceptable materials are Pittsburgh-Corning Corporation "Foamglas" or approved equal. Thermal conductivity at 50°F shall be less than 4.6×10^{-4} Watts cm/cm^2 °C (0.32 BTU in/hr ft^2 °F). Curved sections for equipment shells and piping insulation shall be manufactured from billets assembled with ASTM D 312 Type III hot asphalt. A factory coating of ASTM D 312 Type II or III hot asphalt shall be applied on the exterior curved surfaces and interior bore. For operating temperatures above 185°F, gypsum cement should be used instead of hot asphalt per section 4.2.6.

4.3.3 Flat stock insulation materials that are grooved to fit cylindrical surfaces for equipment shells and pipe sizes above 12 inches shall be vee-cut so that the cuts close completely along their entire length when the insulation is installed. Materials used for fabrication shall conform to the requirements of this specification. Dimensions of the installed product shall conform to ASTM C 585 for pipe insulation. Backing and adhesives are subject to review and approval by the BUYER.

4.3.4 Loose fill material and cushioning blanket for service temperatures to 680°F shall contain no asbestos, have a density greater than 8 lbs/ft^3, and be glass fiber needled together to form a mat without the use of binders. The following materials are acceptable:

- Alpha Associates "Filomat D"
- Burlington Glass Fabrics "Burlglass 1200"

4.4 Mastics and Cements

4.4.1 Mineral fiber thermal insulating cement shall meet the requirements of ASTM C 195. Insulating and finishing cement shall meet the requirements of ASTM C 449. Reinforcing wire mesh shall be 1 inch hex x 0.023 inch three twist Monel or 18-8 SS wire.

4.4.2 Caulking compound for temperatures up to 365°F sealant shall be silicone rubber, Dow Corning 999 Silicone Rubber, or equal. Compound exposed to temperatures between 365°F and 680°F shall be Childers CP-79 or equal.

4.4.3 Reinforced weatherproofing compound shall be acrylic or vinyl acrylic water base emulsion and reinforced with a Dynel, nylon, or polyester leno weave or knitted fabric with 10 x 10 mesh per inch and a weight of 2 oz/yd^2.

4.4.4 Heat transfer cement shall be appropriate for the tracer temperature and process temperature. The cement shall be compatible with the surface coating system or steel substrate. Preformed flexible heat transfer cement may be used. On carbon steel pipe, steel channel to cover tracer shall be galvanized. For coupling vessel walls with plate heat coils, a non-hardening heat transfer cement shall be used. If required, insulation tape shall be 2 inches wide x 1/8 inch thick plain weave, suitable for operating temperatures to 1000°F.

4.4.5 Joint sealant for cellular glass at all temperatures, and vapor stop sealant for temperatures above 5°F for cellular glass shall be Foster Sealant 95-50. Below 5°F, sealant for vapor stops shall be Foster 90-66. Reinforcement for vapor stops (and weather barrier) shall be synthetic cloth equal to Pittsburgh-Corning PC Fabric 79, or BUYER-approved equal.

4.5 Jacketing

4.5.1 Aluminum jacketing shall be ASTM B 209 Alloy, 1100, 3103, 3105 or 5005 with an H14 temper. Jacketing for piping size 28 inches and below shall be flat, smooth. Jacketing for horizontal equipment shells and piping sizes above 28 inches shall be stucco embossed sheet. Jacketing for vertical equipment shells shall be furnished 1 1/4 inch corrugated. The corrugations shall be 1/4 inch deep. Jacketing for exposed equipment heads shall be gores fabricated from stucco embossed sheet.

Nominal thickness shall be 0.016 inch for piping and 0.024 inch for equipment.

Jacketing shall have a factory applied moisture barrier that is continuously heat-sealed to the aluminum. The moisture barrier shall consist of a 3 mil high density polyethylene, Poly-Surlyn film, or one layer of 40 lb virgin kraft paper laminated with a one mil polyethylene adhesive.

If specified by the BUYER, jacketing shall be supplied with a polyvinylidene fluoride (PVDF) or acrylic exterior coating and the specific color shall be approved by the BUYER. Otherwise all metal jacketing shall be the natural color of the jacketing material.

4.5.2 Stainless jacketing shall be ASTM A 240 Type 304 flat, smooth sheet 0.016 inch thick furnished in the annealed or soft condition with a regular 2B mill finish and have a factory applied moisture barrier as specified for aluminum jacketing.

4.5.3 Die formed two-piece aluminum ell covers shall be used for NPS 12 and smaller pipe sizes. Die formed four piece aluminum ell covers or molded fiberglass covers shall be used for sizes above NPS 14. Aluminum covers shall be deep drawn from 0.024 inch thick aluminum alloy 1100-0. Fiberglass covers shall be 0.040 inch thick flame retardant polyester.

Aluminum covers shall have a factory applied moisture barrier coating such as PVDF or Poly-Surlyn on the inner surface. The external surface of aluminum covers shall be coated or not coated to match the adjacent pipe jacket. Vapor barriers used with fiberglass insulation or other mineral fiber insulation for cold services shall comply with ASTM C1136.

4.5.4 If available, stainless steel die formed covers with a factory applied moisture barrier shall be furnished for ells and tees. Gored segments or stove-pipe construction of 304 stainless steel may be substituted.

4.5.5 Gored segmented aluminum or stainless steel covers shall be used over welded tees. The metal thickness and coating shall be the same as adjacent pipe jacketing. The seams shall shed water and keep the insulation dry. Flanged tees shall be insulated with flexible removable covers and shall not have metal covers.

4.6 PP Guards (Code PG)

4.6.1 Personnel protection guards shall be fabricated from perforated or expanded metal. For hot stainless steel pipe or equipment to be protected, the expanded metal guard shall be Type 304 stainless steel. For carbon steel surfaces, galvanized steel shall be used. Support may be provided by structural steel anchored at the equipment foundation or by clips banded to the piping or equipment. Support clips shall be designed to locate the expanded metal a minimum of 3 inches from the hot surface, and shall be the same or compatible material as the pipe or equipment.

4.6.2 Guards on flanged connections and equipment shall be designed for convenient removal for maintenance access. Individual section shall not weigh more than 40 lbs.

4.6.3 Typical design sketches for metal shields shall be submitted by the SELLER and shall be approved by the BUYER prior to fabrication or installation.

4.7 Insulation and Jacketing Securement

4.7.1 Tie wire, lacing wire, and lacing hair pins shall be 16 gauge Type 304 soft annealed SS wire.

4.7.2 Tape for fastening cellular glass pipe insulation shall be 3/4 inch wide fiberglass reinforced filament tape. The tape shall not be applied to stainless steel unless it conforms to the halogen content requirements of Section 4.1.6.

4.7.3 Bands shall be 0.020 inch thick by 0.50 inch or 0.75 inch wide as required by Sections 4.0, 5.0, and 6.0 and conform to ASTM A 240 Type 302 or 304 stainless steel. Seals shall be heavy-duty wing type or crimp (closed) type fabricated from 0.032 inch thick ASTM A 240 Type 302 or 304 stainless steel. Crimp (closed) type seals are required with spring tensioned banding.

4.7.4 Springs for securement of jacketing on piping and rigid insulation on equipment shall be Type 302 stainless steel limited expansion type. Springs for securement of jacketing on vessels and tanks with diameters exceeding 10 feet shall be compression type.

4.7.5 Sheet metal screws shall be #8 x 1/2 inch 18-8 SS self-tapping screws with elastomeric gaskets.

4.7.6 Stainless Steel "S", "J", or "U" Clips for supporting metal jacket courses or banding shall be 0.020 inch thick by 0.75 inch wide ASTM A 240 Type 302 or 304 stainless steel.

5.0 General Installation Requirements

5.1 Safety

5.1.1 All surface preparation, materials, and work shall comply with all applicable environmental and safety provisions, laws, regulations, ordinances, etc., of the city, county, state, province, or nation pertaining to the work being performed and the materials being used. Work being performed in the United States shall also be in strict accordance with federal (OSHA Standard 29 CFR 1910.144), state, and local safety and environmental requirements.

5.1.2 SELLER shall comply fully with OSHA Hazard Communication Standard 29 CFR 1910.1200 or the applicable country code. Material Safety Data Sheets (MSDS) shall be provided by the materials Supplier and available at the place of application for review.

5.1.3 The volatile organic compound (VOC) content of all materials shall meet federal, state, and local or other regulatory requirements.

5.2 Weather Protection

All insulation and necessary materials shall be protected from moisture during storage and installation. Temporary polyethylene sheeting shall protect insulation in wet weather conditions until the final application of the permanent jacketing. Wet insulation is unacceptable and must be replaced with dry materials. Expanded perlite and cellular glass that has been exposed to the rain or other moisture shall be dried to the BUYER's satisfaction. Mineral fiber and calcium silicate that becomes wet shall be removed from the site and not used.

5.3 Conditions of Surfaces to be Insulated

5.3.1 All surfaces to be insulated shall be clean and dry.

5.3.2 Because corrosion is more aggressive to insulated surfaces than uninsulated surfaces operating in the temperature ranges just above ambient, all carbon steel normally operating at temperatures up to 300°F will be coated with epoxy.

5.3.3 No insulation shall be installed until completion of any stress relieving, chemical cleaning, coating application, pressure testing, tracer installation, and release of the surfaces in writing by the BUYER's site representative.

5.4 Insulation Fit-Up

5.4.1 All voids and cracks (larger than 3/32 inch) in hot insulation shall be pointed and filled with the insulating cement. Thickness of cement on irregular surfaces shall equal the thickness of the adjacent preformed insulation. Cracks larger than 5/16 inch shall be corrected by re-fitting the insulation unless filling is accepted by the BUYER.

For anti-sweat insulation, all joints shall be fitted up to be 1/16 inch or less or the insulation removed and remachined. All joints shall be completely filled with joint sealant from interior to exterior surface.

5.4.2 For rigid insulation materials, a 1 inch gap adjacent to support rings, tie bars, or piping ells shall be provided as an expansion joint. The joint shall be filled with loose fill material. Piping ells insulated with preformed mineral fiber do not require expansion joints.

5.4.3 Flanged fittings, flanged valves, flanged pumps, flanged blinds and single flange pairs on piping and equipment including manways and nozzles, if insulated, shall be insulated last, after the completion of all testing, and insulation of adjacent pipe or equipment surfaces.

5.5 Multi-Layer Insulation

Where possible, insulation shall be applied in a single layer as indicated in the insulation thickness tables of Appendix A. When multi-layer construction is used, joints of the top two layers shall be offset at least 1.5 inches from each other using staggered layer techniques to ensure all joints in each layer are offset.

5.6 Jacketing and Compound

5.6.1 Unless specified otherwise, aluminum jacketing shall be used for all insulation except for function HF, which shall have stainless steel jacketing.

5.6.2 Reinforced mastic weather coating compound may be used on surfaces of complex shapes that cannot be fitted with aluminum and do not require fire resistance as for function HF. It shall be used only on calcium silicate and perlite insulation. The emulsion-type weather coating shall not be applied when atmospheric precipitation or condensation may wet the finished surface within 24 hours after application.

The mastic weather coating shall be applied as follows for most applications:

- Apply a layer of finishing cement over the insulation to provide a smooth, even surface
- Apply mastic to 1/8 inch wet thickness
- While still wet, wrap with reinforcing fabric. Lap joints 2 inches
- Apply finish coat of mastic to completely cover fabric. The total dry film thickness shall be a minimum of 1/8 inch

5.6.3 Jacketing shall prevent entry of liquid water into the insulation under all normal weather conditions and wash down operations. The design of the jacketing shall be such that joints shed water and do not depend on organic caulks to prevent the ingress of water. All penetrations through the metal jacketing shall be flashed to lap the penetration and jacketing a minimum of 3 inches, banded, and sealed with caulk.

5.7 Fireproofing Insulation

For fireproofing insulation, function HF, the metal jacket on piping and equipment shall be stainless steel rather than aluminum or mastic coating. Insulation for function HF shall be cellular glass or calcium silicate. HF insulation thickness shall be as specified on applicable drawings, data sheets, and/or other specifications, but shall be 2.5 inches minimum thickness. For both piping and cylindrical equipment, the insulation as well as the jacketing shall be circumferentially banded with 1/2-inch stainless steel bands on 6 inch centers.

5.8 Installation Details

Typical insulation details are provided in Process Industry Practices INIH1000 and INIC1000. The SELLER may submit alternate sketches for BUYER approval.

5.9 Piping Versus Equipment Installation Methods

Heat exchanger and cylindrical equipment shells less than 24 inches in diameter shall be insulated in the same manner as piping. Piping larger than 48 inches shall be insulated by the methods specified for equipment. Heads on equipment less than 24 inches diameter shall be insulated with a flat disk of block butted against extended cylindrical shell insulation.

6.0 Specific Installation Requirements for Piping

6.1 Insulation Placement

6.1.1 On traced lines, the preformed pipe covering shall be of a larger insulation size or used in combination with straight block insulation as required to enclose the trace line without grooving the insulation.

6.1.2 Circumferential joints of pipe insulation sections shall be offset or staggered between top and bottom sections by a section half length. Longitudinal joints shall be nearly horizontal, and in multi-layer construction, shall not coincide with the longitudinal joints of previous (or subsequent) layers. The offset distance between staggered joints shall be at least 1.5 inches. Hinged vee-grooved pipe covering is permitted on hot piping insulation sizes larger than 12 inches. If hinged vee-grooved insulation sections are used, the hinge shall be located on top to shed any encroaching water. Only the second and third layers may be combined into a composite block for application as a unit.

6.1.3 Where insulation terminates on pipe runs, insulation will be stopped short a minimum 1.25 times the bolt length from the face of the flange or sufficient distance to remove flange bolts without disturbing the insulation and jacketing.

6.1.4 Hot welded and screwed fittings and valves 3 inches and smaller can be insulated with wire mesh reinforced combination insulating and finishing cement applied in 0.5 inch layers to achieve the thickness of the adjacent pipe insulation.

6.2 Insulation Support

6.2.1 Insulation and jacketing on vertical piping shall be supported on an approved bolt-on support ring supplied and installed by the SELLER. Carbon steel rings shall be installed on carbon steel pipe and stainless steel rings shall be installed on chrome steel (Cr-Mo), austenitic stainless steel, Inconel, and Hastelloy piping.

6.2.2 Ring supports shall be installed at the bottom of the pipe run and above interruptions in the pipe run such as at flanges and valves; however, maximum spacing shall be 13 feet. Support rings are not required for vertical rises less than 6 feet when measured from the bottom of a pipe run or from a support at an interruption.

6.2.3 Rings shall be sized to support all layers of insulation but smaller than the insulation diameter. A 0.5 inch gap shall be maintained between the insulation jacketing and the outside edge of the support ring.

6.3 Hot Insulation Expansion Joints

6.3.1 Periodically, circumferential joints shall be filled with loose glass fill or mineral fiber blanket to make an expansion joint in the rigid insulation covering. The fill shall be compressed 50% during installation to yield a joint 1 inch wide. The joint shall be filled completely to the full layer thickness of the insulation.

6.3.2 The expansion joints shall be spaced equally between pipe supports or pipe anchors but shall not exceed the distance between expansion joints listed in Table 6.3.

Table 6.3, Expansion Joint Spacing

OPERATING TEMPERATURE	MAXIMUM DISTANCE
Below 320°F	33 feet
320°F to 500°F	26 feet
Above 500°F	16 feet

6.4 Insulation Securement

6.4.1 Each individual pipe insulation section shall have a minimum of two securements.

6.4.2 Cellular glass shall be secured with adhesive tape on 9 inch centers before jacketing is banded in place.

6.4.3 Each layer of expanded perlite and calcium silicate insulation shall be secured to pipe using tie wire, 0.5 inch wide stainless steel bands, or adhesive tape on 9 inch or 12 inch spacing according to Table 6.4.

Table 6.4, Securement Spacing

PIPE SIZE (inches)	NUMBER OF LAYERS	OUTER LAYER SECUREMENT / SPACING (inches)	INNER LAYER SECUREMENT / SPACING (inches)
Below 12	1, 2 or 3	Wire/9	Wire/12
12 to 28	1	Wire/9	N.A.
12 to 28	2 or 3	Bands/12	Wire/9
Above 28	1	Bands/9	N.A.
Above 28	2 or 3	Wire/9	Wire/9

6.5 Jacketing Securement

6.5.1 On horizontal pipe insulation, metal jacketing shall overlap 3 inches both longitudinally and circumferentially. Seams shall be arranged to shed water, i.e., the upper shall overlap the lower sheet. Longitudinal seams shall be located at the 3:00 or 9:00 position on the pipe circumference. Securement of the metal jacket shall be by 0.5-inch wide bands placed on the circumferential overlaps and on 12-inch centers.

6.5.2 On vertical pipe insulation, metal jacketing shall overlap 2 inches for circumferential seams and 3 inches for longitudinal seams. Jacketing shall be supported from insulation support rings or from jacketing below using 3 or more stainless steel "S" clips. Circumferential joints shall be lapped to shed water. The longitudinal seam shall be located on the leeward side from the prevailing storm wind direction if possible. In any case, the joints shall be located so they are easily accessible for caulking. Securement of the metal jacket shall be by 0.5 inch bands placed on the circumferential overlaps and by screws on 3 inch centers along the longitudinal over-laps. Screws shall be placed in the longitudinal over-laps so that circumferential joints are free to accommodate expansion and contraction movements. Longitudinal seams of vertical pipe jacketing shall be caulked.

6.5.3 Expansion springs shall be fitted to bands that secure jacketing over multi-layer insulation on piping larger than 28 inches. Bands shall not be located adjacent to jacketing laps. Springs shall be extended 1.3 times their original length when tensioned.

6.5.4 Die formed covers shall have their heel and throat fastened with screws on 4-inch maximum centers. The cover sections shall overlap themselves and the pipe jacketing at least 2 inches. Bands 0.5-inch wide shall secure each end of the cover to the pipe jacketing.

6.6 Caulking

A heavy fillet of heat resistant caulk shall be applied around flashing at all protrusions through the jacketing. Protrusions must rely on flashing to keep water out. Other jacket-to-jacket seams not waterproof by virtue of their design shall be caulked with silicone rubber sealant.

7.0 Specific Installation Requirements for Vessels and Heat Exchangers

7.1 Insulation Placement

7.1.1 Unless otherwise approved by the BUYER, expanded perlite or calcium silicate rigid block insulation shall be used as the single layer on all shells of horizontal equipment. Semi-rigid mineral fiber board shall be used as the single layer on vertical equipment shells.

7.1.2 Joints shall not align between the top two layers of multi-layer insulation but shall be offset at least 1.5 inches.

7.1.3 Heads on equipment 24 inches diameter and less shall be insulated with a flat disk of block butted against extended cylindrical shell insulation.

7.1.4 Top heads and heads not protected by a skirt on vertical equipment larger than 24 inches diameter shall be insulated with shop fabricated rigid insulation segments. Machine cut rigid block for heads shall be installed in the locations indicated by the manufacturer's map.

7.1.5 Heads protected by a skirt and heads on horizontal equipment larger than 24 inches shall be insulated with mineral fiber blanket applied over steel surfaces operating below 680°F. For horizontal equipment shells, rigid blocks shall be installed with the long axis of the insulation block parallel to the equipment axis. The first course of block applied around the equipment shell circumference shall be applied with every other block cut to a half length so that circumferential joints are broken or staggered between adjacent blocks of the first and subsequent courses.

7.1.6 Cut and bevel blocks as necessary to obtain joints no wider than 7/32 inch at the outside surface of the insulation. Rigid block lengths shall be at least 18 inches. Acceptable maximum rigid block widths are as follows in Table 7.1.

Table 7.1, Rigid Block Widths

EQUIPMENT SIZE	MAXIMUM BLOCK WIDTH
Up to 39 inch diameter	3 inch vee-cut block or pipe covering
39 to 79 inch diameter	4 inch vee-cut block
79 to 118 inch diameter	6 inch vee-cut block
Above 118 inch diameter	9 inch vee-cut block

7.1.7 For Vertical Equipment shells, semi-rigid board shall be installed in vee-grooved sections for diameters less than 13 feet. For shell diameters larger than 13 feet, flat board is acceptable.

7.2 Insulation Securement

7.2.1 Adhesives shall not be used to hold insulation on equipment.

7.2.2 Cellular glass, if used, shall be secured with 0.75 inch wide fiberglass tape on 9 inch centers before jacketing is banded in place.

7.2.3 Each layer of rigid insulation shall be secured to equipment shells using 0.5 inch wide stainless steel bands. Where required, insulation shall be coped to accommodate expansion springs below the profile of the insulation. Expansion springs and securement shall be according to the Table 7.2.

Table 7.2, Expansion Springs and Securements

EQUIPMENT DIAMETER	NUMBER OF INSULATION LAYERS	OUTER LAYER SECUREMENT	INNER LAYERS SECUREMENT	EXPANSION SPRINGS PER BAND
39 to 118 inches	1, 2 or 3	Bands	Bands	None
Above 118 inches	1	Bands	N.A.	1
Above 118 inches	2 or 3	Bands	Bands	2, 180° Apart

7.2.4 Each layer of mineral fiber semi-rigid board insulation shall be secured with bands 0.75 inch wide. Expansion springs are not required.

7.2.5 Secure shell insulation by banding each layer on 12 inch maximum centers. For longer block or board lengths, 18 inch maximum centers may be used, but secure every block or board with a minimum of two bands.

7.2.6 Extend head bands radially from a central floating ring, and space them to provide at least one band per block at extreme circumference of the head. Bands shall be applied and sealed under tension by machine.

7.2.7 Where projections prevent a continuous band, secure the band at the projection by a bridle ring. Tie wire may be used to hold the blocks where projections prevent the use of continuous bands, e.g., between platform or ladder support brackets.

7.2.8 Insulating cement shall be used to fill up any voids or cracks flush with the block surface. See Section 4.4.

7.2.9 Expansion joints are required on horizontal vessels operating above 320°F or having a tangent length greater than 20 feet. An expansion joint shall be provided for each 10 feet of length and be equally spaced along the length. Fill expansion joints with loose mineral fiber or glass fiber.

7.2.10 Removable blanket insulation, where designated for manways, heads, and flanges shall be installed after all permanent insulation work is completed.

7.3 Jacketing Securement

7.3.1 Corrugated covering on vertical equipment shall be installed with corrugations running vertically with a minimum of 2.5 corrugations overlap. The edge of the sheet shall terminate in a valley. Circumferential overlap shall be 4 inches.

7.3.2 For stucco embossed jacketing on horizontal equipment, longitudinal and circumferential joints shall be lapped 3 inches and arranged to shed water.

7.3.3 Each section of metal jacketing shall be supported from the next lower section with "S" clips. The bottom section of covering shall be supported by "J" clips attached to the insulation support.

7.3.4 The covering shall be banded with 3/4 inch wide bands over circumferential laps with intermediate bands on 12 inch maximum centers. For resistance to high winds, band spacing shall be 9 inches with 2 bands located on circumferential overlaps.

7.3.5 Bands over rigid insulation and jacketing without corrugations shall have expansion devices as specified for the outer layer of insulation in Table 7.2.

7.3.6 Bands without springs shall be tensioned sufficiently to remove all slack.

7.3.7 Bands shall be supported by a minimum of two "S", "U", or "J" clips with a maximum spacing of 6 feet between supports. Springs, if present, shall be located away from jacketing laps.

7.3.8 On vertical vessels, metal screws shall be installed on 6 inch maximum centers in longitudinal seams. For resistance to high winds, screws shall be installed on 4 inch maximum centers.

7.3.9 Head gore segments shall be fastened to each other with screws on 6 inch centers and bands placed over each gore. For resistance to high winds, screws shall be installed on 4 inch maximum centers.

7.3.10 Flashing and a heavy fillet of silicone caulk shall be used to seal around all projections through the jacketing and all longitudinal seams. Jacketing shall be cut to fit tightly around all penetrations while allowing adequate room for expansion and contraction over the operating temperature range. All penetrations must be designed and flashed so that water will not enter.

10.0 Documentation and Submittals

10.1 SELLER shall submit detailed installation procedures complete with detailed sketches showing methods of applying insulation, particularly for valves, flanges, fittings, expansion joints, and metal jacketing.

10.2 All materials used must be completely described as to manufacturer and type. The SELLER shall furnish a certificate from the manufacturer confirming compliance with all requirements of Sections 2.0 and 3.0.

10.3 SELLER's procedures must describe how materials will be stored, handled, mixed, and used in accordance with the manufacturer's printed instructions.

10.4 SELLER shall maintain a copy of their procedures properly revised and used by site supervision to control the execution of the work. The procedures and revisions thereof must be submitted for the BUYER's review and authorization to proceed prior to use.

11.0 Inspection

The BUYER reserves the right to inspect the insulation prior to and after jacketing installation. The SELLER shall replace or correct any materials or installations that do not meet the requirements of this specification and reference drawings.

Appendix A
Insulation Thickness Tables

Table A-1

Insulation Thickness for Heat Conservation (HC), Process Stability (PS), Electric Traced (ET), and Steam Traced (ST) Function Codes

Pipe Size (inches)	Normal Operating Temperature of Process Fluid (°F)						
	≤ 140	140-230[1]	231-320	321-410	411-500	501-590	591-680
	Insulation Thickness (inches) [1]						
0.5	1.0	1.0	1.0	1.5	1.5	2.0	2.5
0.75	1.0	1.5	2.0	2.5	2.5	3.0	3.0
1	1.0	1.5	2.0	2.5	2.5	3.0	3.0
1.25	1.0	2.0	2.0	2.5	3.0	3.0	3.0
1.5	1.0	2.0	2.0	2.5	3.0	3.0	3.0
2	1.5	2.0	2.5	2.5	3.0	3.0	4.0
3	1.5	2.5	2.5	3.0	3.0	4.0	4.0
4	1.5	2.5	3.0	3.0	3.0	4.0	4.0
6	1.5	2.5	3.0	4.0	4.0	4.0	4.0
8	1.5	2.5	3.0	4.0	4.0	4.0	4.0
10	1.5	2.5	3.0	4.0	4.0	4.0	4.0
12	1.5	2.5	4.0	4.0	4.0	4.0	4.0
14	2.0	3.0	4.0	4.0	4.0	4.0	4.0
16	2.0	3.0	4.0	4.0	4.0	4.0	4.0
18	2.0	3.0	4.0	4.0	4.0	4.0	4.0
20	2.0	3.0	4.0	4.0	4.0	4.0	4.0
24	2.0	3.0	4.0	4.0	4.0	4.0	6.0
30	1.5	3.0	4.0	4.0	4.0	4.0	6.0
36	1.5	3.0	4.0	4.0	4.0	6.0	6.0
48	1.5	3.0	4.0	4.0	4.0	6.0	6.0
Flat	2.0	4.0	4.0	4.0	6.0	6.0	6.0

[1] HC insulation is not required for normal process fluid temperatures below 70°F (for outdoor or unheated locations) and 100°F (for indoor, heated locations).

Table A-2

Insulation Thickness for Personnel Protection (PP) Function Code

Pipe Size (inches)	Maximum Operating Temperature of Process Fluid (°F)					
	140-230[1]	231-320	321-410	411-500	501-590	591-680
	Insulation Thickness (inches) [1]					
0.5	0.5	0.5	0.5	1.0	1.0	1.5
0.75	1.0	1.0	1.0	1.5	1.5	2.0
1	1.0	1.0	1.0	1.5	1.5	2.0
1.25	1.0	1.0	1.0	1.5	2.0	2.0
1.5	1.0	1.0	1.0	1.5	2.0	2.0
2	1.0	1.0	1.0	1.5	2.0	2.5
3	1.0	1.0	1.5	2.0	2.0	2.5
4	1.0	1.5	1.5	2.0	2.5	3.0
6	1.0	1.5	1.5	2.0	3.0	3.5
8	1.5	1.5	2.0	2.5	3.0	3.5
10	1.5	1.5	2.0	2.5	3.5	4.0
12	1.5	1.5	2.0	2.5	3.5	4.5
14	1.5	1.5	2.0	3.0	3.5	4.5
16	1.5	1.5	2.5	3.0	4.0	5.0
18	1.5	1.5	2.5	3.0	4.0	5.0
20	1.5	1.5	2.5	3.5	4.0	5.0
24	1.5	2.0	2.5	3.5	4.0	5.0
30	1.5	2.0	2.5	3.5	4.5	5.5
36	1.5	2.0	3.0	3.5	4.5	6.0
48	1.5	2.0	3.0	4.0	5.0	6.0
Flat	1.5	2.5	3.5	4.5	6.0	7.5

[1] Insulation thickness is based on maintaining 140°F jacket temperature; for process fluid temperatures below 140°F, insulation is not required for personnel protection (PP).

ATTACHMENT PS02

LAW TCO CUSTOMIZED PS02

Per 24590-WTP-3PS-PS02-T0001, Rev. 10
ENGINEERING SPECIFICATION FOR SHOP FABRICATION OF PIPING

This attachment defines the requirements and the work necessary for fabrication of piping subassemblies (pipe spools) in accordance with the requirements of ASME B31.3, Process Piping, other codes and standards, and documents as referenced in this specification. This specification applies to all quality levels as specified by the purchase order. For continuity and maintaining configuration control, the section numbers from the specification noted above have been retained.

1.2 Work Included

1.2.1.14 Perform Positive Material Identification (PMI) on completed fabrication in accordance with specification 24590-WTP-3PS-G000-T0002, *Engineering Specification for Positive Material Identification (PMI) for Shop Fabrication.*

1.4 Codes and Standards

1.4.1 ASME B321.3-1996; *Process Piping,* is the piping code for the WTP Project.

For Q applications, the editions of reference codes, standards and specifications shown in Appendix E of ASME B31.3-1996 listed below, and those listed in 24590-WTP-3PS-PB01-T0001, *Engineering Specification for Technical Supply Conditions for Pipe, Fittings, and Flanges,* are acceptable for use. If the Supplier wants to use a later edition or addenda of a reference code, standard, or specification then the Supplier shall submit an SDDR.

When using ASTM material specifications for commercial material (CM) items, any version more recent than the ASTM version listed in Appendix E of ASME B31.3 1996 is acceptable. An SDDR is not required for these commercial material (CM) item ASTM material specification edition changes.

ASME materials identified in ASME Boiler & Pressure Vessel Code, Section II Material Specifications as being identical to the ASME B31.3, Appendix E listed ASTM Material Specifications, for the year, alloy, type and / or grade, (if applicable), are acceptable for use.

See Specification 24590-WTP-3PS-PB01-T0001, Section 2.1 for ASTM Material Specifications table for acceptable years.

1.4.1.1 The American Society of Mechanical Engineers (ASME)

ASME B16.11-1991; *Forged Fittings, Socket-Welding and Threaded*

ASME B16.25-1986; *Buttwelding Ends*

ASME B16.28-1986; *Wrought Steel Buttwelding Short Radius Elbows and Returns*

ASME B16.36-1988; *Orifice Flanges*

ASME B16.47-1990; *Large Diameter Steel Flanges NPS 26 through NPS 60*

ASME B16.5-1988; *Pipe Flanges and Flanged Fittings NPS 1/2 through NPS 24 Metric/Inches*

ASME B16.9-1986; *Factory-Made Wrought Buttwelding Fittings*

ASME B36.10M-1985; *Welded and Seamless Wrought Steel Pipe*

ASME B36.19M-1985; *Stainless Steel Pipe*

1.4.1.2 ASME Boiler and Pressure Vessel Code (B & PV)

ASME B & PV Code Section V- latest edition, *Nondestructive Examination*

ASME B & PV Code Section VIII, Division 1, latest edition, *Rules for Construction of Pressure Vessels*

ASME B & PV Code Section IX- latest edition, *Welding and Brazing Qualifications*

1.4.1.3 American Society for Testing and Materials (ASTM) Material Specifications

For ASTM material designations, refer to 24590-WTP-3PS-PB01-T0001, *Engineering Specification for Technical Supply Conditions for Pipe, Fittings, and Flanges*

1.4.1.4 Pipe Fabrication Institute (PFI) Standards

ES-7 - 1962 (R1984), *Minimum Length and Spacing for Welded Nozzles*

1.4.1.5 Manufacturers Standardization Society

MSS SP-25-1978 (R1988), *Standard Marking System for Valves, Fittings, Flanges, and Unions*

MSS SP-83-1987, *Class 3000 Steel Pipe Unions Socket Welding and Threaded*

MSS SP-95-1986 (R1991), *Swaged Nipples and Bull Plugs*

MSS SP-97-1987, *Integrally Reinforced Forged Branch Outlet Fittings*

1.4.2 Other Standards

The following standards are not reference standards of ASME B31.3, 1996, but are acceptable for use to facilitate ASME B31.3 piping fabrication, or are used for pipe fabrication that is not within the scope of ASME B31.3.

1.4.2.1 Pipe Fabrication Institute (PFI) Standards

ES - 3, Fabricating Tolerance

ES - 5, Cleaning of Fabricated Piping

ES - 16, (Deleted)

ES - 24, Pipe Bending Methods, Tolerances, Process, and Material Requirements

ES - 31, Standard for Protection of Ends of Fabricated Piping Assemblies

1.4.2.2 International Association of Plumbing & Mechanical Officials

Uniform Plumbing Code (UPC), 1997 Edition

1.4.3 In case of a conflict between the requirements of the referenced codes, standards, specifications, regulations, and procedures, the Supplier shall submit a recommended resolution to the BUYER via a Supplier Deviation Disposition Request (SDDR) for review and permission to proceed prior to implementation.

1.5 Reference Documents and Drawings

The entire list of documents below may or may not apply in all cases. Refer to the purchase order for a listing of those documents that are applicable.

1.5.1 24590-WTP-3PS-PB01-T0001, *Engineering Specification for Technical Supply Conditions for Pipe, Fittings, and Flanges*

1.5.3 24590-WTP-3PS-NWP0-T0001, *Engineering Specification for General Welding and NDE Requirements for Supplier Fabricated Piping*

1.5.9 24590-WTP-3PS-G000-T0002, *Engineering Specification for Positive Material Identification (PMI) for Shop Fabrication*

1.7 Cleaning and Coating

See Attachment AFPS for additional clarification.

1.7.1 Cleaning

1.7.1.1 Perform cleaning after fabrication has been completed. Cleaned piping shall be free of loose rust or mill scale, blisters, grease, sand, oil, dirt, and other foreign materials.

1.7.1.2 Fabricated spools shall be cleaned in accordance with the standard cleaning method described in PFI-ES-5.

1.7.1.3 Clean austenitic stainless steel, nickel alloy, and titanium piping in a protected area that is free from airborne chloride contamination. Prevent contamination from non-stainless steel, non-nickel alloy or non-titanium particles such as machine chips, grinding dust, weld spatter, and other debris during fabrication by shielding or other suitable means.

1.7.1.4 Only austenitic stainless steel brushes not previously used on other material may be used on austenitic stainless steel piping.

Stainless steel wire brushes that have not been used on other materials shall be used to clean nickel alloy or titanium.

1.7.1.5 Where solvent is required to remove grease or oil from austenitic stainless steel piping, acetone, or alcohol (ethyl, methyl, or isopropyl) shall be used. Alternatively, a detergent flush may be used in lieu of solvent cleaning with prior permission to proceed from BUYER.

- Cleaning solvents used for cleaning titanium materials are methyl alcohol, acetone, or other chlorine-free solvents.
- Titanium weld preparation includes removing any oil, grease, dirt, or grinding dust from surfaces to be joined. Steam cleaning or an alkali dip in a dilute solution of sodium hydroxide can remove most of these contaminants. To remove the last remaining organic compounds just before welding, use a lint-free glove and methyl alcohol, acetone, or other chlorine-free solvent.

1.7.1.6 Final cleaning materials in contact with austenitic stainless steel shall contain less than 200 ppm chlorides. If detergent cleaning is used, rinse austenitic stainless steel with potable water having no more than 100 ppm chloride content. After rinsing, the piping shall be drained out completely such that no standing pockets/puddles of water remain that may later concentrate by evaporation. Removal of excess rinse water may be augmented by swabbing, use of a "squeegee," or air blowing.

1.7.1.7 After cleaning, blow dry the interior surfaces of all piping with clean, filtered, oil-free air.

1.7.3 External Surface Coating

1.7.3.1 Apply external surface coating in accordance with Attachment AFPS, Appendix D, Number 8.20, System Code D.

1.7.3.4 Do not paint the gasket seating surface of flange faces. The gasket seating surface of flange faces shall be cleaned and coated with a one of the following rust preventives:

1.7.3.4.1 Grease (manufacturer's standard)

1.7.3.4.2 Lectra Shield and SP-400, CRC Industries

1.7.3.4.3 Mobilarma 247, Mobil

1.7.3.4.4 Any preservative listed in Attachment AFPS

1.8 Packaging, Storage, Handling, and Protection

Packaging, handling, and storage of pipe spools are as list below. These requirements are based on the applicable requirements listed in Specification 24590-WTP-3PS-G000-T0003.

1.8.1 Sealing Openings

1.8.1.1 Comply with the minimum end protection requirements criteria outlined in PFI-ES-31 to protect all openings and/or as required in the purchase order. The BUYER must provide review and give permission to proceed prior to use of each specific type of desiccant material. Fabrications must be clearly marked indicating desiccant inside.

1.8.1.2 Cover all pipe openings with metal, polyethylene, or nonmetallic end caps, flange protectors, or plugs. Polyethylene or nonmetallic end caps and plugs shall be friction fit, (e.g., Niagara series) or secured by other means. At a minimum, one of the caps or plugs on each spool shall be provided with a 1/8-inch max diameter vent hole to preclude the buildup of internal pressure. Avoid placing the cap or plug with the vent hole on a spool that is oriented in an upward, vertical position. Tape shall not be used to secure end caps or plugs. Clamps used for securing end caps, on stainless steel or alloy spools, shall be made of stainless material.

1.8.2 Marking

1.8.2.3 Any marking material and packing tape used on stainless steel or alloy material is required to be made from low chloride (less than 200 ppm) and low sulfur (less than 400 ppm) type material. The Supplier shall provide a chemical analysis report of the marker/tape for each lot or typical representative sample. The chemical analysis report shall be submitted for BUYER's review and permission to proceed. A copy of the report is not required with each shipment of pipe spools.

2.1.2 Material Traceability

2.1.2.1 Material traceability (such as identification of the item to applicable material specification, heat, batch, lot, part, or serial number or specified inspection, test, or other records) also includes transferring material identification mark(s) prior to subdividing material for all piping material. Traceability is being able to trace the piping material to the applicable MTR. All piping material, regardless of quality level, requires traceability.

2.1.5 Positive Material Identification (PMI)

To ensure material is correctly supplied as specified, the Supplier shall perform Positive Material Identification (PMI) tests in accordance with Specification 24590-WTP-3PS-G000-T0002. The Supplier shall submit their PMI test procedure for BUYER's review and permission to proceed. Note that PMI is not applicable for carbon steel materials and titanium materials. PMI is not to be performed on BUYER furnished valves unless otherwise stated in the purchase order.

2.1.6 Material Commitment

The Supplier shall submit to the BUYER a complete itemized listing of all materials purchased or reserved from the Supplier's inventory for each project. The Supplier shall also provide, upon request, the current status of pre-bought or BUYER-furnished material.

2.1.7 Material Substitutions

All materials shall be in accordance with the BUYER-furnished drawings, the purchase order, and specifications, unless written permission to proceed is granted by the BUYER via the SDDR in accordance with the purchase order requirement.

2.1.8 Material Identification and Marking

2.1.8.1 All materials shall be marked with the information and using marking materials required by the specific ASTM or ASME material specification.

2.1.8.2 Labeling with a marking pen on stainless steel and nickel based alloy material shall be done by any permanent method that will neither result in harmful contamination or sharp discontinuities, nor infringe upon the minimum wall thickness. All marking materials other than material manufacturer's marks shall be of the low chloride (less than 200 ppm) and low sulfur (less than 400 ppm) type. It is acceptable to use a rounded, low stress, vibro-etch tool for this marking.

2.1.8.3 Weld identification symbols must be recorded on detailed spool sheets and extended spool sheets (as applicable) with a cross-reference to any NDE report numbers.

2.1.8.4 Any piece of material not readily identifiable during fabrication shall be rejected, including other components welded thereto.

2.1.8.5 Deleted

2.1.9 Damaged Materials

2.1.9.4 The Supplier shall not make any base metal material repairs using welding.

3 Execution

3.1 Fabrication

3.1.2 Weld Joint Preparation

3.1.2.2 Do not use backing rings.

3.1.7 Flanges

Furnish flanges for flanged connections in accordance with the piping material classes and as shown on design drawings.

3.1.7.1 All slip-on flanges shall be double welded in accordance with paragraph 328.5.2 of ASME B31.3 unless directed otherwise by design document(s).

3.1.10 Valves

3.1.10.1 Install all valves in accordance with the manufacturer's recommended instructions and design drawings. BUYER shall furnish valve manufacturer's installation/disassembly instructions for Supplier's use and reference. The Supplier shall notify the BUYER if they have not been sent the applicable valve manufacturer's installation/disassembly instructions.

3.1.10.2 In addition to manufacturer's instructions, the following apply for valve installation:

3.1.10.2.1 Valve stems shall be positioned in accordance with the isometric and is normally not be inclined below the horizontal. Also, flow arrows, when present on the valve, must align with the flow arrow shown on the isometric.

3.1.10.2.2 Before conducting any welding on diaphragm valves or other soft-seated valves, the bonnet assembly and diaphragm, and any other heat-sensitive components shall be disassembled and valve body cooled, if required by vendor instructions. Particularly for stainless steel valves, care shall be exercised to ensure that contact with cooling medium (e.g., water-soaked wick) is not harmful. Water used for cooling of stainless steel valves shall have a maximum chloride content of 200 ppm.

3.1.10.2.3 To prevent damage or distortion to valve seat and disc, follow the vendor's instructions with respect to position of the valve stem and the disc during installation and welding.

3.1.10.2.4 If disassembly beyond the vendor's standard installation instruction is required, valves and actuators shall be disassembled and reassembled only after documented concurrence has been obtained from the BUYER that doing so will not compromise the warranty and performance of the valve.

3.1.10.2.5 Manual valves shall be disassembled and reassembled, if required, in accordance with the manufacturer's disassembly and reassembly procedures.

3.1.10.2.6 Valves shall be handled and supported with care to preclude damage to handwheels and appurtenances. Lifting lugs shall be used whenever they are provided on a valve. In no case shall a valve be picked up by the valve actuator.

3.1.11 Rework of Fabricated Spools

3.1.11.1 Reworked spools being shipped to the jobsite shall be provided with a Certificate of Conformance (C of C) stating the spools identified are the same spool number(s) originally delivered and received. The C of C shall state that the re-worked spools are in strict accordance and fully comply with the purchase order and all procedures and specifications. The C of C shall also state the re-work performed on each spool.

If additional materials are added, or if additional documentation is provided (NDE reports, MTRs, etc.) a complete documentation package for that spool shall be furnished.

3.2 Inspection and Testing

3.2.1 General

3.2.1.1 The Supplier is responsible for nondestructive examination and testing of piping furnished under this specification.

3.2.1.2 All examination, inspection, and testing shall be in accordance with this specification and other governing codes and standards, as applicable. This includes nondestructive examination of the piping spools in accordance with the requirements for Normal Fluid Service piping in ASME B31.3-96.

3.2.1.3 BUYER's representative shall be provided free access to the Supplier's and Supplier's subcontractor's or Supplier's facilities, to witness, inspect, and report progress of work.

3.2.1.4 Note: No sub-supplier shall perform NDE work without prior submittal of the sub-supplier's NDE procedure and BUYER's review and permission to proceed.

3.2.2 Examination of Fabrication Welds

3.2.2.1 Examine all completed pressure boundary welds in accordance with the ASME B31.3-96 and/or standard, including the requirements listed below, as applicable. Weld repair shall be examined according to the requirements used for the original weld.

3.2.2.2 Perform and evaluate examinations in accordance with procedures and acceptance standards prepared in accordance with the ASME B31.3-96 and/or standard, and the *ASME Boiler & Pressure Vessel Code*, Section V.

Summary Table of Non-Destructive Examinations (NDE) of Pipe & Tubing Shop Welds

Table 2 Piping Weld Examination Requirements

See sections 3.2.2.2 for applicable shop weld NDE, inspection, and acceptance criteria requirements.

Type of Weld	**Piping Outside Black Cells and Hard-To-Reach areas**
All Girth and Miter Welds	100% VT 5% RT or 5% UT
All Pipe and Integral Attachment Fillet Shop Welds - including thermowell socket welds, integral support welds, non pressure & non load bearing piping attachment welds	100% VT
All integrally reinforced forged branch fittings welded to main piping run.	100% VT

Legend: VT = Visual Examination per ASME B31.3 para 344.2
RT = Radiographic Examination per ASME B31.3 para 344.5
UT = Ultrasonic Examination per ASME B31.3 para 344.6
PT = Liquid Penetrant Examination per ASME B31.3 para 344.4
MT = Magnetic Particle Examination per ASME B31.3 para 344.3

ATTACHMENT AFPS

LAW TCO CUSTOMIZED AFPS

Per 24590-WTP-3PS-AFPS-T0001, Rev. 4

ENGINEERING SPECIFICATION FOR SHOP APPLIED SPECIAL PROTECTIVE COATINGS FOR STEEL ITEMS AND EQUIPMENT

Only the sections and appendices contained in this Attachment AFPS apply to the LAW Thermal Catalytic Oxidizer/Reducer (TCO). For continuity and maintaining configuration control, the section numbers from the AFPS specification noted above have been retained. Additional clarifications have been added to Sections 1.1 and 6.4.1, identified by an asterisk.

1 Scope

1.1 This specification defines the minimum requirements for Special Protective Coating (SPC) materials/coating systems, surface preparation, application, and inspection of protective coatings to be shop applied. Items and surfaces to be coated shall be coated in accordance with Appendix D of this specification. Unless indicated otherwise in the base technical specification/material requisition or purchase order, all coats will be shop applied. Finish color shall be *ANSI 70 Gray unless indicated otherwise in Section 2.0 of the Material Requisition (MR).

1.2 All Special Protective Coatings (SPC's) are designated as Commercial Grade (CM) and non-safety.

2 General

2.1 Responsibility

2.1.1 The SELLER shall supply all personnel, coating materials and all necessary surface preparation, application, inspection and other equipment as required.

2.1.2 The SELLER shall unload, inspect, and store all inbound steel items and equipment scheduled for coating when manufactured by others. Items found to be damaged or otherwise unsuitable for coating shall be identified and segregated for evaluation by the SELLER.

2.1.3 The SELLER shall store all coating materials, perform surface preparation, coating application and inspection in accordance with this specification and Buyer reviewed procedures. The coating systems and associated coating materials used shall be in accordance with Appendix D Coating Schedule or the Material Requisition (MR) when coatings are specifically identified.

2.1.4 The SELLER shall perform all inspections and tests contained in this specification as necessary prior to verification by the BUYER.

2.1.5 The SELLER shall provide application and inspection documentation for all coating Work in accordance with this specification.

2.1.6 The SELLER shall provide environmental control equipment as necessary for coating application and curing.

2.1.7 The SELLER shall provide erection marking. Marks for color-coding of bulk materials and erection marking shall be fully compatible with the coating system specified.

2.1.8 The SELLER shall touch-up and repair defective or damaged coating in accordance with procedures submitted and reviewed by the BUYER.

2.1.9 The SELLER shall protect all coated surfaces prior to shipment and provide suitable coverings, padding and strapping to protect coated items during shipment.

2.1.10 The SELLER shall only use inspection equipment that is currently (in date) calibrated.

2.2 Surfaces Not To Be Coated

2.2.1 Hold back coating from weld areas-

2.2.1.2 Three (3) to Four (4) inches for **shop** welds when using epoxy or other types of organic coatings

2.2.1.4 Note - The above coating hold back dimensions are only for items previously coated prior to welding. These coating hold back dimensions do not apply to shop welds that will be coated after welding is completed. This Section of the shop coating spec does not have anything to do with coating cold back requirements associated with visual inspection of welds during hydro testing. Coating hold back requirements associated with weld inspection must come from the prevailing code.

2.2.1.6 The coating hold back shall be sufficient to expose the entire shop weld for visual inspection on items fabricated prior to coating.

2.2.2 Name and instruction plates, etc.

2.2.3 Rubber or similar nonmetallic parts.

2.2.4 Machined surfaces.

2.2.5 Non-Ferrous metals unless otherwise specified.

2.2.6 Stainless Steel surfaces, unless specifically required by the BUYER (areas where stainless steel is welded to carbon steel the coating overlap onto the stainless steel shall be approximately 1" or as otherwise specified.)

2.3 Definitions

2.3.1 Batch- A quantity of coating made in one production run. A unique batch number is assigned for each production run of the coating material, curing agent, zinc powders, fillers and thinner.

2.3.3 Dry Film Thickness (DFT)- The thickness of an applied coating, once dry or cured. Usually expressed in mils (each mil is 1/1000 of an inch).

2.3.4 Fish Eyes (cratering)- Formation of holes or visible depression in the coating film. Usually from a contaminated particle on the surface prior to applying the coating.

2.3.5 Holiday- A Pinhole, skip, discontinuity, or void in the applied coating film.

2.3.7 Mfg. Std. Coating- A manufacturers standard coatings system applied to off the shelf items or standard line items of routine manufacture that are not specifically manufactured for the WTP project.

2.3.8 NIST- National Institute of Standards and Technology.

2.3.10 Pinholes- Minute holes visible in the applied coating without magnification that appears to penetrate one or more layers of the coating film.

2.3.11 Profile- The surface roughness resulting from surface preparation by abrasive blasting or other authorized methods. (Refer to Section -7.3.6).

2.3.13 Sag- The running of freshly applied coating on a vertical surface due to being applied too thick. (Same definition for runs and drips)

2.3.16 Training and Certification- Training shall include an understanding of the specification, work procedures and manufacturers published instructions. Certification shall include a documented performance test demonstrating quality work verifiable by the BUYER. (Refer to Sections 4.8, 5.1.7, 7.1.2, and 8.1.1.1)

2.4 Safety

2.4.2 The SELLER shall comply fully with OSHA Hazard Communication Standard 29CFR 1910. Material Safety Data Sheets (MSDS) for all materials, including thinners and cleaning solvents, shall be obtained from the materials manufacturer and upon request made available, at the place and time of Work, for review.

2.4.3 The Volatile Organic Compound (VOC) content of all materials shall comply with Federal, State and Local or other Regulatory requirements.

3 Applicable Documents

3.1 Codes and Standards

The latest applicable edition of the following codes, standards, specifications or WTP procedures form a part of this specification.

3.1.1 American Society for Testing and Materials (ASTM)

ASTM E337- R96; 02	Test for Relative Humidity by Wet-and-Dry Bulb Psychrometer
ASTM D3276- 00; 05	Standard Guide for Painting Inspectors (Metal Substrates)
ASTM D4285- 99	Test Method for Indicating Oil or Water in Compressed Air
ASTM D4417- 99; 03	Field Measurement of Surface Profile of Blast Cleaned Steel
ASTM D4537- 96; 04; 04a	Standard Guide for Establishing Procedures to Qualify and Certify Inspection Personnel for Coating Work Inspectors in Nuclear Facilities.
ASTM D4940- 98; 03	Test for Conductimetric Analysis of Water Soluble Ionic Contaminants of Blasting Abrasives
ASTM D5064-01	Standard Practice for Conducting a Patch Test to Assess Coating Compatibility

3.1.2 The Society for Protective Coatings (SSPC)

SSPC-AB1 6/1/97;7/1/07	Mineral Slag Abrasive
SSPC-PA2 5/1/04	Measurement of Dry Paint Thickness with Magnetic Gages
SSPC-SP1 11/1/82;11/1/04	Solvent Cleaning
SSPC-SP10 11/1/04	Near White Metal Blast Cleaning
SSPC-SP11 11/1/87; 11/1/04	Power Tool Cleaning to Bare Metal
SSPC-VIS 1 6/1/02; 11/1/04	Guide and Reference Photographs for Steel Surfaces Prepared by Dry Abrasive Blast Cleaning

3.1.3 Occupational Safety and Health Administration (OSHA)

OSHA 29 CFR 1910	Occupational Safety and Health Standards

4 Submittals

4.1 SELLER shall prepare detailed written procedures for material receiving, marking, storage, handling, surface preparation, environmental control, application, curing, inspection, testing, touch-up/repair, application personnel qualification, inspector qualification, (G321- E, category 28.0) and proposed documentation forms as described within this specification. The final procedure and documentation forms shall be submitted and

reviewed with BUYER's permission to proceed prior to the start of coating Work. (G321-E category 15.0). Submittal requirements for manufacturers standard coating are found in Section 6.0.

4.2 The SELLER shall submit all procedures and verification documents in accordance with the purchase order (e.g., Appendix J, Form G-321-E. & V, Exhibit "D" located in the purchase order.).

4.4 The SELLER shall identify the specific products by manufacturer and catalog number and shall submit the coating manufacturer's latest published product data sheet, application instructions and Material Safety Data Sheets (MSDS). Conflicts, if any, between the SELLER's normal procedures, the coating manufacturer's recommendations, and this specification shall be brought to the attention of the BUYER for resolution and written permission to proceed. (G321-E category 11.0)

4.5 The SELLER shall submit original or copies of original Coating Manufacturer's Product Identity Certification Records for each and every batch of coating material used on the WTP project (Appendix F). (Refer to G321V category 13.0)

4.6 The SELLER shall submit a daily inspection record as part of the Work procedures that includes all the elements provided in Appendix G as a minimum. An entry for Wet Bulb is not required when the accepted device used to measure humidity and dew point does not require a wet bulb. (Refer to Section 8.1.9 and 10.2) (G321V category 15.0)

4.8 The SELLER shall provide a personnel training and certification plan for applicators and inspectors. (Refer to Section 2.3.16, 5.1.7, 7.1.2 and 8.1.1.1.).

5 Quality Plan

5.1 General

5.1.1 The SELLER shall control the quality of items and services to meet the requirements of this specification, applicable codes and standards, associated procurement documents, referenced herein. The SELLER shall prepare and maintain documentation to provide evidence of compliance with reviewed procedures and this specification. A copy of the coating inspection documentation shall be included in the shipping documentation.

5.1.2 The SELLER, including any lower-tier organizations engaged by him, shall be subject to surveillance inspection by the BUYER representative until completion or termination of the procurement. This surveillance inspection does not relieve the SELLER from the responsibility for conformance to the requirements of procurement documents, this specification and authorized procedures.

5.1.4 The BUYER representative shall be provided with a work activity schedule and shall be notified of all required inspection points prior to the scheduled date for coating activities (Refer to MR Section 5.0).

5.1.5 If the SELLER's proposed Work plan or procedures differ from the requirements of this specification, the SELLER shall specifically identify and explain all differences in writing and submit them to the BUYER for review and verification prior to the start of Work (e.g., Supplier Deviation Disposition Request-SDDR).

5.1.6 All pre-established witness and hold points shall be witnessed by the BUYER unless a written waiver has been issued.

5.1.7 The SELLER's coating inspectors shall have previous experience in coating inspection and shall receive documented training in the specific project coating requirements, ASTM standards and other relevant standards including the reviewed work procedures. All coating inspectors working on steel items or equipment shall be trained and qualified meeting the requirements of Section 8.1.1.1.

6 Materials

6.1 Coating Materials

6.1.2 Coating materials including the primer, intermediate and finish coat on a given item, shall all be from the same manufacturer. One exception to this rule is when upgrading a Manufacturer's Standard (Mfg. Std.) coating using a compatible epoxy tie-coat and suitable topcoat coating system (refer to Section 6.2).

6.1.3 Appendix D Coating Schedule and Appendix C Tables contain the specified Special Protective Coatings for the WTP project. Appendix C contains the generic coating systems and approved coating materials.

6.1.4 Repair materials shall be the same as those originally used. Repair materials shall be in pre-measured units, and only complete kits shall be mixed. Splitting or breaking down pre-measured units of multi-component coating materials may be considered if the SELLER prepares a procedure that requires accurate measurement of all materials and Seller's QC inspector monitoring/verification of each and every mix. This procedure must be submitted to the BUYER for review and permission to proceed.

6.2 Manufacturer's Standard Coating

6.2.1 Components and equipment which are normally mass-produced, inventoried, and supplied from stock generally have been coated with the Manufacturer's Standard Coating (Mfg. Std.) system. Included are small valves, pumps and rotating equipment, filters and electrical equipment such as switchgear, control panels, instrumentation, motors, transformers and electrical enclosures. Items and equipment which are specifically fabricated for the WTP project shall be coated per this specification unless the item is shown to be too delicate to properly coat per Appendix D or the specific requirements contained in the MR.

6.2.1.1 The SELLER may submit an alternate coating to the specified or Mfg. Std. System, by identifying the coating materials, surface preparation, application and inspection on Appendix H including the coating material's latest published technical data sheet and MSDS, to the BUYER for review and permission to proceed.

6.2.1.2 All Mfg. Std. coatings must be identified on an Appendix H and submitted to the BUYER along with technical data sheets and MSDS'. A small, easily replaceable item where coating touch-up is not practical (e.g., very small, too delicate, low cost and easily replaceable) and can only be purchased with the manufacturer's standard coating, an Appendix H Manufacturer's Standard Coating Data Sheet is not required.

6.2.1.3 Deleted

6.3 Machined-Surfaces Coating

6.3.1 Machined surfaces not specified to be coated with a specific coating system shall be protected with a solvent cutback asphalt temporary preservative (Daubert Chemical Tectyl 891, EF Houghton Chemical Rust Veto 342 or authorized equivalent). Temporary preservative applied to carbon steel that is overlapped onto stainless steel must meet the same chemical requirements as listed in Section 6.4. All equivalents must be identified on an Appendix H form and submitted along with the manufacturer's latest published data sheet and MSDS for review and permission to proceed by the BUYER.

6.4 Coating Over Stainless Steel

6.4.1 All coating materials, thinners, solvents and cleaning materials used on SS shall be shown to comply with the following requirements:

Leachable halogen content shall not exceed 200 ppm

The total sulfur content shall not exceed 400 ppm

The total of low melting point metals such as lead, zinc, copper, tin, antimony and mercury shall not exceed one (1) percent. Of this, mercury should not exceed 50 ppm. These low melting metals shall not be intentionally added during the manufacture of the coating.

* (ADDED for LAW TCO MR): Sherwin Williams Macropoxy 646 and Carboline Carboguard 890 have been tested and meet the requirements above. Only these materials are approved for direct contact with stainless steel.

6.5 Batch Information

6.5.1 Each container of coating material used by the SELLER shall be marked with the following:

- The manufacturer's name
- The product designation
- Batch or lot number
- Location and date of manufacture
- The shelf life expiration date

6.6 Abrasives

6.6.1 Abrasives for blast cleaning shall be clean, free of oil or contaminants, and dry. The particle size shall be capable of producing the specified surface profile. Mineral and slag abrasives shall meet the requirements of SSPC AB-1. The first batch/lot of bulk, non-packaged, abrasives shall be tested for water-soluble contaminants and the conductivity shall not exceed 500 micro siemens/cm when tested in accordance with ASTM D4940. As an alternate, a chloride ion test kit, such as the Chlor*Test "A" manufactures by Chlor Rid International Inc, or BUYER accepted equal may be used. The maximum allowable chloride level is 200ppm.

6.6.2 When using reclaimed steel grit/shot abrasive, the particle size shall be capable of producing the specified angular surface profile (minimum 50% steel grit in original mix and all adds shall be 100% steel grit). Reclaimed abrasives already in use and the first batch/lot of new abrasive shall be tested for water-soluble contaminants and conductivity. Conductivity shall not exceed 500 micro siemens/cm when tested in accordance with ASTM D 4940. As an alternate, a chloride ion test kit, such as the Chlor*Test "A" manufactures by Chlor Rid International Inc, or BUYER accepted equal may be used. The maximum allowable chloride level is 200ppm.

7 Application

7.1 General

7.1.1 It shall be the SELLER's responsibility to stop the surface preparation and coating at any time when conditions exist that might adversely affect the quality. The BUYER representative may reject any prepared or coated surfaces not in compliance with this specification.

7.1.2 All painters (e.g., surface preparation personnel and paint/coating material application personnel), shall be individually qualified and certified in accordance with the SELLER's written description that includes classroom training and capability demonstration using the WTP project specification, and the SELLER's procedures as reviewed by the BUYER.

7.1.3 Care shall be taken to avoid blasting or grinding away critical markings, which identify welders, joint numbers, or other markings, which identify the item. Where such data appears in the area to be coated, it shall be protected. SELLER's are responsible for assuring their Sub-Suppliers are instructed concerning these requirements.

7.2 Pre-Surface Preparation

7.2.1 Prior to mechanical cleaning, the surfaces to be coated shall be cleaned in accordance with SSPC SP1 to remove oil, grease, dirt, and other foreign matter that can interfere with the proper bonding of the coating. Any remaining sharp edges, weld spatter, or burrs found after the start of coating Work shall be completely removed by grinding or other means. Pneumatic tools shall not be used unless they are fitted with effective oil and water traps on the exhaust air. If the steel items or equipment was shipped or stored so that the surface could have been contaminated with soluble salts (e.g., above deck ship transport, truck transport on dirt roads close to ocean, storage), the area shall be pressure water washed (2,000-5000psi) with demineralized water to remove as much soluble salt contamination as possible prior to abrasive blasting.

7.3 Surface Preparation

7.3.1 Prior to the start of Work, the SELLER shall examine all surfaces to be coated to determine their acceptability for the specified coating application. If the surfaces are found to be unacceptable, the SELLER shall return the surface to an acceptable condition. Coating work shall not commence until corrective action has been taken. Commencement of coating work prior to the taking of correctable action shall preclude any subsequent claim by the SELLER. The BUYER may require corrective action at the SELLER's expense.

7.3.2 Prior to blast cleaning items to be coated, they shall be visibly dry with the surface temperature of at least 5°F above the dew point. When using automatic blasting equipment that recycles steel abrasive, the steel need only be visibly dry.

7.3.3 All surfaces to be coated shall be pre-cleaned per SSPC SP 1 where oil, grease, and other contaminants are present.

7.3.4 Abrasives shall meet the requirements of Section 6.6.

7.3.5 Surfaces to be coated shall be blast cleaned in accordance with the surface preparation requirements specified in Appendix D (e.g., SSPC SP10). Where abrasive blasting will damage the items or is impractical, SSPC-SP11 Power Tool Cleaning to bare Metal may be substituted only in limited areas and only with BUYER's permission to proceed (e.g. SDDR).

7.3.6 Abrasive blasting carbon steel shall result in an angular surface profile 1.5 to 3.0 mils deep as measured using a profile comparator or Testex Press-O-Film replication tape, in accordance with ASTM D4417 method A or C.

7.3.6.1 Methods established for measuring surface profile produced by abrasive blast cleaning are not valid or conclusive on surfaces that are excessively rough prior to blast cleaning (e.g. rough mill finishes, heavy rusting or pitting [SSPC-VIS 1 Condition D or rougher], cast surfaces, weld beads or physically damaged surfaces). Therefore, to accurately determine the surface profile produced by blast cleaning, profile measurements shall be taken in areas exhibiting the least surface roughness. For example, SSPC-VIS 1 pre-blast Conditions A, B or C typically result in a blasted surface that is acceptable for surface profile measurement.

7.3.6.2 If excessive surface roughness covers the entire item, then a smooth, clean ASTM A36 steel plate (e.g., SSPC-VIS 1 Condition A, B or C), approximately 6" square and at least 1/4" thick, shall be blasted using the identical abrasive, pressure, nozzle, blasting equipment and method used on the actual item. The surface profile measured on the smooth plate is regarded as an accurate measurement of the profile produced by that blasting method, and shall be recorded as the surface profile for the actual item. A new plate shall be blasted and measured at a frequency accepted in the SELLER'S procedures (refer to Section 8.1.9).

7.3.7 Recycled abrasive blasting using a steel grit/shot mix is acceptable. The maximum amount of shot in the original mix shall be 50%. All additions of abrasive shall be steel grit. The stabilized working mix shall be maintained by frequent small additions of new grit abrasive commensurate with consumption.

Infrequent large additions of grit shall be avoided. Steel grit or shot is not acceptable for use on stainless steel surfaces.

7.3.7.1 The working abrasive mix shall be maintained clean of contaminants by continuous effective operations of cleaning machine scalping and air wash separators. Reclaimed grit used for abrasive cleaning shall be tested for the presence of oil/grease by immersing a sample in clean tap water and checking for oil flotation. Tests shall be made at the start of blasting and at a minimum of every four (4) hours thereafter. If oil is evident, the contaminated abrasive shall be cleaned or replaced. All surfaces blasted since the last successful test shall be completely cleaned of contamination then re-blasted using clean abrasive.

7.3.8 Blast cleaning shall not be performed in the immediate area where coating or curing of coated surfaces is in progress. All surfaces and equipment, which are not to be coated, shall be suitably protected from blast cleaning.

7.3.9 Burrs, slivers, scabs, lamination, and weld spatter which become visible after blasting shall be removed. The tools and manner employed to remove weld defects and sharp edges shall not burnish or destroy the profile. If the profile or roughness is reduced, it shall be re-blasted to produce the profile and roughness as required. The exhaust of pneumatic grinders shall not impinge on the cleaned surface. If the surface becomes contaminated, it shall be cleaned of contamination and re- blasted. Carbon steel tools or implements specifically employed for coating surface preparation shall not be used on stainless steel surfaces.

7.3.10 If visible rust occurs or if the cleaned surface becomes wet or otherwise contaminated, these surfaces shall be re-cleaned to the degree specified. Cleaned surfaces remaining uncoated overnight shall be visually reinspected 100% for required cleanliness prior to coating or shall be re-cleaned to the specified cleanliness prior to applying the coating.

7.3.11 After surface preparation is complete and before coating, pressurized air or a vacuum shall be used to remove all dust and abrasive residue. The air shall be clean and dry as verified in accordance with Section 8.1.6 so as not to contaminate the prepared surface.

7.3.12 Machined surfaces shall be wiped with clean solvent before the application of coating and shall be protected from damage due to blasting and coating operations.

7.3.13 Machined portions of pipe flanges and other machined mating faces which will not be exposed after final fit-up shall be masked or covered and protected from surface preparation and coating activities. The remaining part of the flange face and exposed surfaces shall then be blasted and coated (bolt holes need only to be sufficiently coated for visible coverage. No dry film thickness required.).

7.3.14 Equipment shall have all openings plugged, masked, and/or blinded sufficiently to protect internals before abrasive blasting. After the coating operation is complete all internals shall be blown clean and/or vacuumed to remove any dust or abrasive blast media that may have entered the coated equipment.

7.3.15 The abrasive mixture and the compressed air shall be clean, dry and oil free. Moisture traps, in addition to oil and water extractors mounted on the compressor, shall be used in compressed air lines to remove oil and moisture from air close to the point of use. (Refer to Section 7.3.7.1 and 8.1.6)

7.3.16 All valves, valve actuators and motors that will be shop coated shall be blasted and coated prior to assembly. Areas of assembled items that are not coated prior to assembly and subject to damage during blasting must be carefully protected from abrasive damage or abrasive contamination.

7.4 Coating Application

7.4.1 The coating shall be applied in accordance with reviewed procedures (refer to Section 4.1). The coating manufacturer's recommendations for the application temperature and the curing temperature and times (between coats and after last coat) of the specified material shall become a part of this specification.

Application and curing temperatures above or below the limits allowed by this specification (Refer to Section 7.4.4) shall be submitted to the BUYER for review (e.g., SDDR).

7.4.2 Coatings shall be applied using properly sized and type of equipment for the size & complexity of the item being coated. The equipment shall be clean with all components in good working order.

7.4.3 Surfaces that will become inaccessible shall be coated before assembly, tagging, fitting, or welding. Inaccessible surfaces includes lap joint flanges, nozzle necks, lap joint stub ends, lap rings, bolt holes, flanges for exchangers and vessels, and welded joints that become inaccessible after assembly.

7.4.4 Coatings shall be applied only when the surface to be coated is clean and dry. The substrate temperature shall be a minimum of 5°F above the dew point during coating application and until the applied coating is no longer moisture sensitive per the coating manufacturer's published data or written recommendations. The substrate and air temperature during coating application and curing shall be a minimum of 50°F (Inorganic zinc primers 40°F) and a maximum of 110°F. The relative humidity during coating application shall not exceed 85 percent. Measure humidity in accordance with ASTM E 337 (Sections 1.0-19.0) or using an alternate method reviewed and accepted by the BUYER. Deviations from the above listed minimum and maximum substrate/air temperature and humidity limits may be allowed when in accordance with the coating manufacturer's published or written recommendations and are accepted by the BUYER. The one firm limit is that the minimum substrate or air temperature shall not be less than 35 °F regardless of the coating manufacturer's published or written recommendations.

7.4.5 The SELLER shall record all batch numbers for each coating component used along with other information necessary for the BUYER to relate the batch to the item for which it was applied. (Refer to Appendix G)

7.4.6 All coatings shall be thoroughly mixed until they are smooth and free from lumps, then strained through a screen of at least 30 mesh. Zinc filled coatings shall be continuously agitated from the time initially mixed and while being applied. Other coating materials shall be mixed in accordance with the coating manufacturer's published recommendations. All multi-component coating materials shall be in pre-measured units. Splitting or breaking down pre-measured units is not permitted. See Section 6.1.4 for requirements for mixing repair materials.

7.4.7 Alternating coats shall have a visible color difference to insure full coverage over previous coats. Touch-up of individual small spots < 6 sq. in, do not require a visible color difference when individually marked for repair and the mark remains in place until the repair is accepted.

7.4.8 Dry film thickness of each coating shall be in accordance with Appendix C/Table 1 Acceptable Coating Materials or as specified in the MR. (Refer to Section 8.3.2 & 8.3.3).

7.4.9 Relative to the ambient and surface temperatures the minimum and maximum drying times between coats shall be in strict accordance with the coating manufacturer's latest published technical data sheets.

7.4.10 Runs, sags, voids, drips, overspray, loss of adhesion, bubbling, peeling, or inadequate cure are not permitted. Where possible, defects shall be corrected as detected during application of the coating.

7.4.11 Spray equipment, brushes and rollers shall be cleaned using only manufacturer recommended solvents/cleaners.

7.5 Remedial Work

7.5.1 The completed coating on each item shall have the correct dry film thickness and shall be free of damage and visible defects.

7.5.2 Repair of Dry Film Thickness (DFT) deficiencies

7.5.2.1 Defects such as runs, sags, overspray and embedded particles shall be corrected by sanding to remove the defect. When the defects are in the finish coat, all areas sanded must be overcoated with the finish coat. If the DFT of primer or intermediate coat is reduced to less than the specified

minimum, the area shall be abraded with 80 grit sand paper or flapper wheel and an additional layer of coating shall be applied until sufficient thickness is achieved. If noticed during application, the sags or runs may be brushed out.

7.5.3 Repair of Damage

7.5.3.1 All damaged and loosely adhering coating shall be removed and the surface thoroughly cleaned using 80 grit sanding disc, 80-grit flapper wheel or 3M Clean-N-Strip. Edges of the breaks shall be feathered and the resulting surfaces shall be roughened. The designated number of prime and finish coats shall be applied.

7.5.4 Loss of adhesion, delamination blisters, bubbling and fish eyes in the applied coating require the coating to be removed and reapplied in accordance with this specification.

8 Inspection

8.1 General

8.1.1 The SELLER shall have the full responsibility for the coating application quality in accordance with this specification and shall be responsible for stopping Work activities when conditions develop that could adversely affect the quality of the completed work. All Work is subject to the BUYER's inspection surveillance.

8.1.1.1 All coating Work inspection personnel shall be trained, qualified and certified in accordance with the SELLER's reviewed procedures. The inspectors shall meet or exceed the minimum capability requirements for a Level I coatings inspector as described in ASTM D4537 Section 6.2. The SELLER's inspector training, qualification and certification procedures and plan shall include classroom training on the WTP project specification, and the SELLER's reviewed procedures using the guidelines provided in ASTM D5498. The SELLER's inspector must demonstrate his/her capability of using the inspection equipment and performing all the required inspections. Additional coating work inspection guidance is found in ASTM D3276 and ASTM D6237 which may also be used in developing procedures for training and certifying coating work inspectors.

8.1.2 The BUYER representative shall be the final authority on the specification compliance for surface preparation and material application. Any coating, which in the BUYER representative's judgment, has not been applied in conformance with this specification, shall be rejected.

8.1.3 The BUYER representative shall have access to each part of the process and shall have the right and opportunity to witness any of the Quality Control Tests.

8.1.4 The SELLER shall furnish the necessary testing and inspection instruments, properly calibrated and maintained. If equipment is suspected of being out of calibration, it shall be re-calibrated and certificates made available for verification to the BUYER. Such equipment shall be available for use by the BUYER in conducting surveillance of the work. Calibration of testing and Inspection instruments shall be traceable to NIST or Buyer authorized alternative standards.

8.1.5 The SELLER shall halt the coating Work and make corrections to the procedures, as necessary to correct repetitive faults found in the Work.

8.1.6 Prior to using compressed air, the quality of the air downstream of the separator shall be tested in accordance with the requirements of ASTM D4285 by blowing the air onto a clean white blotter or cloth for two (2) minutes at a distance of no more than (12) inches to check for any contamination, oil, or moisture. "This test shall be performed at the start of work and every 4 hours thereafter". The test shall also be made after any interruption of the air compressor operation or as required by the BUYER. The air shall be used only if the test indicates no visible contamination, oil, or moisture. If contaminants are evident, the equipment deficiencies shall be corrected and the air stream shall be re-tested. Moisture separators shall be bled continuously. All lines shall be tested individually prior to use. Surfaces

determined to have been blown down or blasted with contaminated air shall be cleaned of all contamination then re-blasted with clean air and abrasive. Coatings determined to have been applied using contaminated air shall be removed and reapplied using clean air.

8.1.7 Inspection points shall be established as follows:

- Prior to the start of Work.
- Immediately following the surface preparation
- Immediately prior to the coating application
- Following the application of each coat
- Following the curing of the coating
- Final inspection and sign-off, in accordance with the project requirements

8.1.8 Any defects disclosed by inspection shall be re-inspected after correction.

8.1.9 The SELLER shall keep the records indicated below, and submit these records to the BUYER (refer to Section 4.6 and Appendix G). The following lists the frequencies:

Coating/Inspection Step		Required Frequency
1.	Pre-Surface Prep Surface Preparation Profile	100% visual on Pre- Surface 100% on Surface Prep/Cleanliness Profile first item of each type per shift and every 20 items thereafter or other frequency as BUYER accepted in SELLER's procedures.
2.	Environmental/Air Quality	At the start of each work and every 4 hours thereafter or more often during changing conditions.
3.	Recirculated Abrasive	At the start of work and every 4 hours thereafter
4.	Thickness Per SSPC PA2	On large items five (5) spot reading per 100 sq.ft. On items < 100 sq.ft. four (4) spot readings On items less than 4" (valves, fittings, components, etc) two (2) spot readings, For repair spots < 6 sq. inches and > 1 sq. inch. Two (2) spot readings For repair spots < 1 sq. inch one (1) spot reading For small chips/nicks/scratches and pinhole size repair spots need only a visual. For complex surfaces such as structural steel (steel beams) the frequency of dry film thickness readings shall be in accordance with SSPC-PA2 Appendix 3 section A3.4.1 excluding any readings on the flange toes. In accordance with figure A.3 "The Surface of a Steel Beam" the following locations are acceptable for the test readings- 1, 3, 4, 5, 7, 9, 10 and 11; and the following locations are excluded from test readings- 2, 6, 8, 12. For beams less than 20'-0" two (2) sets of 8 spot readings shall be taken.

		For beams 20'-0" thru 60'-0" three (3) sets of 8 spot readings shall be taken.
5.	Visual on Applied Coating.	100% of all items

8.2 Surface Preparation Inspection

8.2.1 Verify environmental conditions and compressed air quality (refer to Section 7.3.2, 8.1.6).

8.2.2 Verify recirculated grit is grease and oil free (refer to Section 7.3.7).

8.2.3 Verify surface cleanliness and profile (refer to Sections 7.3.5, 7.3.6 and 8.1.9).

8.2.4 Grease free chalk shall be used to mark local areas, which do not meet the specified requirements (e.g., soapstone and crayons are not acceptable).

8.3 Coating Application

8.3.1 Environmental conditions and compressed air quality shall be verified per Sections 7.3.2, 7.4.4, 8.1.6 and 8.1.9.

8.3.2 Dry coating thickness (DFT) shall be measured with a magnetic film thickness gage such as an Elektro-Physik "Mikrotest" or Positector 2000, Positector 6000 or BUYER authorized equal in accordance with SSPC PA2. The number and location of dry film thickness readings shall be in accordance with section 8.1.9.4.

8.3.2.1 The gage shall have an appropriate range that is suitable to measure the thickness expected and record calibration accuracy in accordance with SSPC PA 2 at the start of work, against certified coating thickness calibration standards for non-magnetic coating of steel, traceable to NIST or BUYER authorized alternative standards. The calibration standards shall be in date, and 1.5 mil to 20.0 mil range, unless otherwise specified.

8.3.3 Any surface with a measured thickness outside of the limits described in Section 7.4.8 shall be rejected. These areas shall be reworked or re-cleaned and re-coated at the SELLER's expense. The average of the required number of readings shall be within the specified dry film thickness range. Any of the required spot readings may be as low as 80% of the minimum specified or 120% of the maximum specified as long as the average of all the readings is within the specified range. An individual spot reading that conforms to this criteria conforms to the specified dry film thickness.

9 Storage, Handling and Shipping

9.1 Coating Materials

9.1.1 Coating materials shall not be stored in direct sunlight or exposed to inclement weather (e.g. rain, snow, sleet, freezing rain, dew point condensation, see also Section 9.1.5). Materials shall remain under cover until ready to use.

9.1.3 Coating material shall be delivered in manufacturer's original unopened containers. Each container shall be clearly identified with the manufacturer's name, product designation, batch number, date of manufacture and shelf life expiration date.

9.1.4 The maximum shelf life allowed for coating materials used on the WTP project is 24 months from the date of their manufacture. Coating materials that are older than 24 months or that exceed the manufacturer's published shelf life, if less than 24months, shall not be used and shall be placed on HOLD and segregated from other coating materials. A one-time shelf life extension of no less than three (3) months and no more than six (6) months, may be issued by the coating manufacturer. The shelf life extension shall be based on

laboratory testing of retain samples taken at the time of manufacture or by testing a sample provided from the actual coating material in question. Where testing verifies an outdated coating material still complies with its original design criteria, it is acceptable for shelf life extension. Expiration date stickers, provided by the coating manufacturer, shall be affixed to each container prior to release from HOLD. The stickers shall include the product number, batch/lot number, the new expiration date and suitably marked to indicate that they came from the coating manufacturer. A new Appendix F shall be provided by the coating manufacturer that includes the test results and specifically indicates it was provided to document shelf life extension including new expiration date. Coating materials that have not been stored or handled in accordance with Sections 9.1.5, 9.1.6, 9.1.7 and 9.1.8, may not have their shelf life extended.

9.1.5 Coating material shall be protected from moisture, direct sunlight and temperatures below 40°F or above 100°F unless otherwise allowed by the coating manufacturer's latest published instructions and verified by the BUYER.

9.1.6 Coating material containers where the airtight seal has been broken or any of the contents are lost, shall not be used and shall be clearly marked and segregated from useable coating material.

9.1.7 Coating material containers shall not be opened except for immediate use.

9.1.8 Unused material shall be returned to storage as soon as possible at the end of each Workday. Materials left out for more than eight (8) hours in an uncontrolled storage area (areas without environmental controls that are exposed to ambient weather) shall not be used and shall be clearly marked and segregated from useable coating material.

9.1.9 All required coating material certifications (Appendix F forms) for each batch of material delivered to the SELLER shall be available at the time of material receipt. Materials delivered to the shop without the required documentation shall not be used and the SELLER shall tag and place discrepant materials into a hold area clearly separated from acceptable material. Once required documentation is received or otherwise corrected and found to be acceptable, the discrepant material may then be taken off hold status and used.

9.2 Steel Items and Equipment

9.2.1 The SELLER shall be solely responsible for the condition of the steel items and equipment from the time they are received until they have been delivered to the BUYER.

9.2.2 All booms, hooks, clamps, forks, supports, and skids used in handling or storing coated items shall be designed and maintained in such a manner as to prevent any damage to the items or to the coating and shall be reviewed by the BUYER's representative. Chains and wire rope in direct contact with the coated items are not acceptable. Fabric lifting and tie down straps shall be used.

9.2.3 The SELLER shall inspect all items upon receipt for shipping and handling damage. Any visible damage observed at this point shall be noted on the receipt inspection report.

9.2.4 All coated steel items and equipment shall be stored on padded supports as necessary to preclude damage to the coating. The supports shall be properly spaced and leveled.

9.2.5 The BUYER's representative will have authority to stop any storage or handling activity, if there is a possibility of damage to the coating.

9.2.6 All steel items and equipment damaged by the SELLER shall be repaired in accordance with the specification at the SELLER's expense. Only repair procedures reviewed by the BUYER shall be used.

10 Documentation

10.1 The SELLER shall provide a record of all materials used (related to individual batch number- refer to Appendix F).

10.2 The SELLER shall provide a record of all required daily inspections (Example- Appendix G) that includes pre-surface preparation, compressed air cleanliness, environmental conditions, surface preparation and roughness, location of field repairs coated, application, visual inspection, dry film thickness, holiday testing and all touch-up/repair. This record shall include the coating and thinner materials used and the ID of the items coated to provide traceability.

10.3 All quality documentation shall be available for review by the BUYER representative within 24 hours from the time it is generated.

10.4 SELLER documentation forms or the way that the actual Work will be documented shall be provided by the SELLER as part of the procedures submittal for review by the BUYER.

10.5 Documentation shall be submitted in accordance with the requirements listed in Section 3 of the Material Requisition (MR).

APPENDIX C
Coating Materials/Coating Systems

TABLE 1 - PREQUALIFIED COATING PRODUCTS

Coating Number	Generic Products	Dry Film Thickness (mils)	Ameron	Carboline	Devoe	Dudick	Inter-national	Sherwin Williams
P02	Organic Zinc Epoxy Primer	3.0-5.0	Amercoat 68HS	Carbozinc 859	313	None	Interzinc 52	Zinc Clad IV
P04	High Build Epoxy	4.0-6.0	Amercoat 385	Carboguard 890	224HS	Protecto-Coat 330 or 300	Intergard 475HS	Macropoxy 646

NOTES to Table 1, Appendix C:

1) All versions of the above coating materials shall comply the WTP project VOC requirements of 3.8 lbs./gal and shall also comply with more restrictive local VOC requirements where the work is being performed. In the event the listed coating materials or acceptable versions of the listed coating materials do not meet the local VOC requirements an alternate VOC compliant material may be submitted for review.

TABLE 2 – COATING SYSTEM CODES

SYSTEM CODE	D
COAT 1	P02
COAT 2	P04
COAT 3	P04
COAT 4	

NOTES to Table 2, Appendix C:

1) The surface preparation for all coating systems shall be SSPC SP10 Near White Blast with a surface profile of 1.5 to 3.0 mils unless otherwise noted in this specification or the material requisition.

Appendix D
Coating Schedule

No.	Item – Component	System Code	Surface Prep. SSPC		1st Coat	DFT in mils	2nd Coat	DFT in mils	3rd Coat	DFT in mils	Color
			Initial	Repair							
7.0	**Skid Mounted Equipment**										
7.10	Skid Mounted Equipment-interior	All items on the skid shall be individually coated.									
8.0	**Miscellaneous Steel Items and Equipment**										
8.20	Miscellaneous Mechanical Equipment-Interior	D	SP10	SP11	P02	3.0-5.0	P04	4.0-6.0	P04	4.0-6.0	ANSI 70 GRAY

NOTES TO APPENDIX D

5. Flange surface (except gasket surfaces) & boltholes shall be cleaned and coated the same as the adjacent component.
8. Individual components of skid-mounted units shall be coated as noted for each individual item listed in Appendix D.
9. Complete details of the Manufacturer's Standard coating system shall be submitted for review. Refer to Section 6.2.
18. To minimize the potential of cracking or chipping where bolts are torqued onto precoated surfaces and within the bolted connection itself, a three coat coating system may be reduced to the prime coat and one finish coat directly under the bolt head, washer and nut up to 1/2" beyond.

Appendix F

Coating Manufacturer's Product Identity Certification Record

Project Name: _____ Coating Manufacturer: _____
Project Number: _____ Purchase Order Number: _____
Project Location: _____ Contract Number: _____
Coating Applicator: _____ Generic Coating Type: _____
Product Name: _____ Product Number: _____

(For multi-component products, provide data for all components on one or more Appendix F forms).
(Provide the standard range and actual batch values for each test)

TEST RESULTS		**Component A Batch No.**		**Component B Batch No.**	
Test	**Test Method Used**	**Standard Range**	**Batch Actual**	**Standard Range**	**Batch Actual**
Weight per Gallon					
Viscosity					
Flash Point (Typical)					
% Solids by Volume (Typical)					
Cure to recoat time @ 50F, 70F, & 90F (typical)					
Batch Size					
Date of Mfg.					
Shelf Life					
Expiration Date					

COMMENTS:

I hereby certify that the coating materials described above were manufactured with the same formulation, raw materials, production methods, and quality control standards as the coating materials originally tested and/or accepted for use at the River Protection Project-Waste Treatment Plant (WTP) Project site, located in the 200 East Area of the Hanford Site in Washington State in accordance with the requirements of WTP specification 24590-WTP-3PS-AFPS-T0001, 24590-WTP-3PS-AFPS-T0003,24590-WTP-3PS-AFPS-T0004, 24590-WTP-3PS-AFPS-T0006 and 24590-WTP-3PS-PX04-T0004.

Signed: _____ Date: _____
Title: _____ Company: _____

Appendix G
Surface Preparation and Coating Inspection Form

Page __ of ___

REPORT NO:_____ DATE: _____
PROJECT:_____ DAY: M T W T F S S
SUBCONTRACTOR/SELLER:_____ SHIFT: _____
EQUIPMENT/AREA:_____ INSPECTOR: _____
SUBSTRATE: STEEL/CONCRETE/OTHER-_____ COATING SPEC NO/REV:_____
ENVIRONMENTAL CONDITIONS:

WORK ACTIVITY						
TIME						
DRY BULB TEMP. °F						
WET BULB TEMP. °F						
RH %						
DEW POINT °F						
SURFACE TEMP. °F						
BLOTTER TEST						

PRE-SURFACE PREPARATION:
SP-1:_____ MASKING/PROTECTION:_____ SURFACE DEFECTS:_____

SURFACE PREPARATION:
METHOD:_____ ABRASIVE TYPE/SIZE/STORAGE:_____
CLEANLINESS SPEC:_____ ACTUAL:_____PROFILE SPEC:_____ ACTUAL:_____
EQUIPMENT:_____

COATING MATERIALS & MIXING:
PRODUCT(S)_____
BATCH NO(S)/QUANTITIES/EXPIRATION DATE:_____/_____/_____
THINNERS/THINNING RATIO:_____/_____/_____
STORAGE:_____ MIXING: _____ INDUCTION TIME:_____
MATERIAL TEMPERATURE:_____ POT LIFE EXPIRATION TIME:_____
COATING/LINING APPLICATION START TIME:_____ FINISH TIME:_____
COAT: PRIMER/PRIMER T.U./SECOND/SECOND T.U./THIRD/THIRD T.U./OTHER
METHOD:_____ WFT:_____ RECOAT TIME/TEMP:_____ CURE TIME/TEMP:_____
EQUIPMENT:_____

APPLIED COATING:
VISUAL INSPECTION (FILM IMPERFECTIONS):_____
DRY FILM THICKNESS: SPEC:_____ ACTUAL:_____ METHOD:_____
HOLIDAY TEST:_____ METHOD:_____ OTHER TESTING:_____ METHOD:_____
TOUCH-UP AND REPAIR:_____ FINAL CURE:_____

COMMENTS: (*Use reverse side or attach extra pages*)

_____/_____
INSPECTOR'S SIGNATURE/DATE

Appendix H
Manufacturer's Standard Coating Data Sheet

The SELLER proposes the following Manufacturer's Standard (Mfg. Std.) or alternate coating system that is suitable for the exposure conditions of steel items and equipment in radiation and non-radiation areas.

1. **^Equipment Description:** _____
   A. Tag Number _____
   B. Part(s) i.e. skirt, shell, channels, lugs, etc.* _____
   C. Design/Operating Temperatures, designate °F or °C .... _____ °F _____ °C
   D. Does Equipment Receive Steam out (Yes/No), Temperature _____ °F _____ °C
   E. Insulated/Uninsulated _____
   F. Fireproofing (Yes/No) _____
   ^G. Carbon Steel (CS), Stainless Steel (SS), other (List) _____
2. **^Seller:** _____
3. **^Surface Preparation:** SSPC No./Profile _____ / _____
4. **Coating System Designation:** (Code)

	First Coat	Second Coat	Third Coat
^A. Type of Coating			
^B. Coating Mfg./No.**			
^C. Dry Film Thickness (Min/Max in mils)/(μm) ...			
D. Wet/Film Thickness (Min/Max in mils)/(μm)			
E. Curing Method			
^F. Color			
G. Dry to Recoat			
H. Pot Life			
L. Thinner / %			

5. **Total DFT of System:** (Mils/μm)(Min/Max) ..... _____ / Min. _____ / Max.
6. **Material Storage:** Temperature Requirements (Min/Max) _____ / _____
7. **Shelf Life:** _____ Months
8. **Application Environmental Limits:**
   A. Temperature Ambient and Surface (Min/Max) ..... _____ / _____ _____ / _____
   B. Humidity (Min/Max) ..... _____ / _____
   C. Surface Temp ≥5°F above Dew Point temp. (Yes/No) ..... _____
9. **Protection of surfaces that will be inaccessible after equipment installation (such as underside of base plates, interior of fans, vessels or equipment housings)** _____
10. **Rust Preventative for machined faces:** (**Mfg./No.) _____
11. **Quantity of touch-up coating supplied:** ***None***
12. **Additional information:** (attach extra page as necessary) _____

* Use additional copies of this form for each part described in 1 above that requires a different coating system. A completed copy of this data sheet shall be submitted to CONTRACTOR/BUYER with the initial vendor data submittal.

** Include manufacturer's technical data sheets and MSDS for each proposed coating & preservative.

^ Mandatory data entry. Other entries should be completed where information is available from sub vendor or from coating material technical data sheets.

ATTACHMENT EEQ

LAW TCO CUSTOMIZED EEQ GUIDANCE

Environmental Equipment Qualification Requirements for SS-Chemical Toxicity Equipment in the LAW Facility

Environmental Equipment Qualification Requirements for SS-Chemical Toxicity Equipment

1. The equipment shall be designed under applicable codes and standards to withstand the effects of its environmental and process conditions and perform its safety function under the applicable Design Basis Event (DBE) conditions.

2. The Seller shall establish and document the ability of the supplied safety equipment to perform its safety function under the most severe environmental and process conditions to which it is subject during its installed life.

   The evaluation necessary for this purpose may be based on testing, analyses or operating experience. The necessary data shall have been obtained under quality assurance requirements imposed elsewhere in the procurement documents.

   The environmental service conditions considered shall be those contained in the Equipment Qualification Datasheets (EQD) applicable to the supplied equipment and are provided as part of the procurement documents. The process conditions considered shall be those stated in the equipment datasheets or elsewhere in the procurement documents.

   Testing performed to establish adequate performance under Design Basis Event (DBE) conditions, including Seismic testing, need not be performed on an aged test specimen.

3. The Seller shall consider the aging effects of the environmental and process conditions.

   The Seller shall consider the effects of temperature (thermal aging), radiation and wear as aging mechanisms. For radiation exposure evaluations, a total radiation dose of less than 1.0E03 Rad is not a significant radiation aging mechanism for electronic components. A total dose of less than 1.0E04 Rad is not a significant radiation aging mechanisms for organic compounds.

   The results of the aging evaluation shall be documented as recommended maintenance, replacement and/or surveillance actions which are required in response to the aging effects.

   The desired qualified life for the supplied equipment for the WTP is 40 years. However, if agreed to by the BUYER, the equipment/component qualified life may be less than 40 years.

4. Components not involved in the equipment's safety function(s) may be excluded from the Seller's qualification process if it can be shown, through a documented means such as analysis that assumed failures, including spurious operation, have no adverse effect on the stated safety function(s) or by way of interfaces, on the safety function(s) of other equipment.

5. The results of the qualification evaluations required above shall be specific to the equipment items supplied to WTP. Any modifications made to the equipment after the evaluations are complete shall also be evaluated in accordance with the above requirement and the results shall be similarly documented.. Modifications to the equipment include changes in its design, materials, manufacturing process, clearances, lubricant, or mounting conditions.

6. Documentation of Qualification

    a. The Seller shall provide a signed Certificate of Conformance to the specified performance requirements. The certificate shall be in the form shown in Attachment 11 of the primary specification 24590-LAW-3PS-MBTV-T0001, *Engineering Specification for LAW Thermal Catalytic Oxidizer/Reducer.*

    b. Passive Equipment

        i. The Seller shall provide a documented evaluation confirming that the applicable bounding normal, abnormal, accident and post accident environmental and process conditions will not degrade non-metallic component/subcomponent performance in such a manner as to prevent the equipment from performing its required passive safety function(s).

    c. Active Equipment (including all electrical, instrumentation and controls equipment)

    d. The Seller shall either: a) document recommended replacement (whole equipment or parts) or maintenance actions which are required in response to the aging effects and include a specific statement that the recommended replacement (whole equipment or parts) or maintenance actions are based on the aging considerations, or b) provide a statement that no maintenance / components replacements are required due to aging considerations if the equipment is not susceptible to aging,

    e. All qualification documentation shall be submitted to WTP under document category 35 of BNI Form G-321-E.

34.0 ANSI K61.1, American National Standard Safety Requirements for the Storage and Handling of Anhydrous Ammonia

Revision: 1999

Sponsoring Organization: Compressed Gas Association, Inc.

WTP Specific Tailoring

The following tailoring of ANSI K61.1 is required for use by the WTP project as an implementing standard for the safety related systems design.

Page 9; Section 5.1 Equipment and systems

Revise Section 5.1 as follows:

Not Applicable

Justification: Section allows the continued use or reinstallation of containers and systems designed and installed under earlier versions of codes and ANSI standards. WTP does not plan on using previously installed or design equipment. Therefore, Section 5.1 of this standard will not be implemented for this project.

Page 11; Section 5.2 Requirements for new construction and original test, repair, and alterations of containers (including DOT portable tanks), other than refrigerated storage tanks

Revise the first sentence of Section 5.2.2.2 as follows:

Steels used in fabricating pressure containing parts of a container shall not exceed a specified ASME Code Minimum Yield Strength of 70 ksi (483 MPa) (does not apply to Sections 8, 9, and 10).

Justification: Section 5.2.2 states that containers designed and construction in accordance with the ASME Code shall comply with the following requirements. In the wording of Section 5.2.2.2, the term "shall not exceed a specified tensile strength of 70 000 psi" is ambiguous.

ANSI K61.1 - 1989, paragraph 5.2.2.2 states that "Steels used in fabricating pressure-containing parts of a container shall have a tensile strength no greater than a nominal 70,000 psi (480 MPa) (does not apply to Sections 8, 9, and 10)." This paragraph is interpreted to mean that materials with a tensile strength range of 65,000 to 80,000 psi or 70,000 to 95,000 psi would be suitable for this fabrication. A material with a tensile strength range of 80,000 to 105,000 would not be acceptable.

CGA-2 - 1995, paragraph 18.2.1 states that "Steels used to fabricate the pressure-retaining parts of a container must not exceed 70,000 ksi **minimum specified tensile strength** in order to minimize the

potential for the development of stress corrosion cracks during service". Again, this paragraph is interpreted to mean that a material with a specified range of 70,000 to 95,000 psi would be acceptable for this fabrication.

ANSI K61.1 - 1999 / CGA G-2.1 - 1999, paragraph 5.2.2.2, states "Steels used in fabricating pressure containing parts of a container shall not exceed a specified tensile strength of 70,000 psi (483 MPa) (does not apply to Sections 8, 9, and 10)." Exception: Implements of husbandry may be fabricated from steel having a specified tensile strength of 75,000 psi (517 MPa)".

From the sequence of the code issue dates, it appears that the CGA recognized the ambiguity of the word "nominal" when referring to the tensile strength in ANSI K61.1 - 1989, Section 5.2.2.2, and corrected it in CGA-2 - 1995 to indicate the minimum specified tensile strength. In ANSI K61.1 - 1999 / CGA G-2.1 - 1999, Section 5.2.2.2, it appears that the CGA revised its terminology to be more consistent with the terminology used in the ASME codes for the specified tensile strength, which are the minimum tensile strengths. The purpose of tailoring Section 5.2.2.2 is to remove any ambiguity and provided consistency between the ASME Code and ANSI K61.1 -1999.

This tailoring is per DOE Letter 10-NSD-068 dated September 24, 2010 (CCN 225818).

Page 19; Section 6.3 Pressure relief devices

Revise Section 6.3.2 as follows:

Not Applicable

Justification: Section specifies relief valve design for underground containers. WTP does not plan to install underground containers. Therefore, Section 6.3.2 of this standard will not be implemented for this project.

Revise Section 6.3.3 as follows:

Not Applicable

Justification: Section specifies manhole design for relief for underground containers. WTP does not plan to install underground containers. Therefore, Section 6.3.3 of this standard will not be implemented for this project.

Page 19; Section 6.4 Installation of storage containers

Revise Section 6.4.4 as follows:

Not Applicable

Justification: Section specifies design requirements for the installation of underground containers. WTP does not plan to install underground containers. Therefore, Section 6.4.4 of this standard will not be implemented for this project.

Revise Section 6.4.5 as follows:

Not Applicable

Justification: Section specifies design requirements for the installation of underground containers. WTP does not plan to install underground containers. Therefore, Section 6.4.5 of this standard will not be implemented for this project.

Revise Section 6.4.6 as follows:

Not Applicable

Justification: ANSI K61.1 requires both above and below ground containers greater than 1200 gallons to be at least 5 ft. apart. However, OSHA 1910.111, *Storage and Handling of Anhydrous Ammonia*, only implements this requirement for underground containers; OSHA 1910.111(c)(5)(vii) states: "The distance between underground containers of over 2,000 gallons capacity shall be at least 5 feet." CGA G-2 (1995) addresses the safety requirements for the storage and handling of anhydrous ammonia and in Section 18.11.3 States: "Horizontal Clearance. The horizontal clearance between containers shall provide adequate access for emergencies, inspections, and maintenance." WTP's ammonia facility is aboveground, pier mounted, and monitored for ammonia releases and the installed platform provides access for personnel to facilitate operations, maintenance, inspections, and egress, therefore ANSI K61.1 Section 6.4.6 is not applicable.

Revise Section 6.4.7 as follows:

Not Applicable

Justification: Section specifies design requirements for the installation of underground storage systems. WTP does not plan to install underground storage system. Therefore, Section 6.4.7 of this standard will not be implemented for this project.

Revise Section 6.4.8 as follows:

Not Applicable

Justification: Section specifies design requirements for the installation of underground tanks. WTP does not plan to install underground tanks. Therefore, Section 6.4.8 of this standard will not be implemented for this project.

Page 20; Section 6.5 Reinstallation of containers

Revise Section 6.5 as follows:

Not Applicable

Justification: Section specifies requirements for reinstallation of containers. WTP does not plan to use previously used containers. Therefore, Section 6.5 of this standard will not be implemented for this project.

Pages 21-26; Section 7 Refrigerated storage

Revise Section 7 as follows:

Not Applicable

Justification: This section establishes design requirements for system using tanks for the storage of anhydrous ammonia under refrigerated conditions. WTP does not plan on a system using tanks for the storage of anhydrous ammonia under refrigerated conditions. Therefore, Section 7 of this standard will not be implemented for this project.

Pages 26-28; Section 8 Systems mounted on railcar structures (tank cars), other than DOT class 106A, for transportation of ammonia

Revise Section 8 as follows:

Not Applicable

Justification: This section establishes design requirements for tank cars for the rail transportation of ammonia. WTP does not plan to receive anhydrous ammonia by rail car. Therefore, Section 8 of this standard will not be implemented for this project.

Pages 31-32; Section 10 Systems using DOT portable tanks and cylinders

Revise Section 10 as follows:

Not Applicable

Justification: This section establishes requirements for cylinders (less than 1000 pounds), DOT portable tanks and DOT containers. WTP does not plan to receive anhydrous ammonia by container or cylinder. Therefore, Section 10 of this standard will not be implemented for this project.

Pages 32-34; Section 11 Systems mounted on farm wagons (implements of husbandry) for the transportation of ammonia

Revise Section 11 as follows:

Not Applicable

Justification: This section establishes requirements for equipment mounted on farm wagons for the transportation of ammonia. WTP does not plan to use farm wagons for the transportation of ammonia. Therefore, Section 11 of this standard will not be implemented for this project.

Pages 34-35; Section 12 **Systems mounted on farm wagons (implements of husbandry) for the application of ammonia**

Revise Section 12 as follows:

Not Applicable

Justification: This section establishes requirements for equipment mounted on farm wagons for the application of ammonia. WTP does not plan to use farm wagons for the application of ammonia. Therefore, Section 12 of this standard will not be implemented for this project.

Pages 35-37; Section 13 **References**

The references listed shall be constrained to the approved versions listed in the SRD or approved changes and equivalencies.

The following references shall be excluded:

ANSI/ASHRAE 15, American National Standard Safety Code for Mechanical Refrigeration

ANSI/IIAR 2, American National Standard for Equipment, Design and Installation of Ammonia Mechanical Refrigeration Systems

ANSI/ASME B31.5, American National Standard for Refrigeration Piping

ANSI/SAE J1513f, Refrigeration Tube Fittings

API Standard 620, Design and Construction of Large Welded Low-Pressure Storage Tanks

Justification: The above references are for the design of refrigerated storage systems. WTP does not plan to use a refrigerated anhydrous ammonia storage system. Therefore, these references will not be implemented for this project. The exception is ANSI/ASME B31.5 which provides a basis for utilizing certain materials in lower temperature applications considered compliant with the intent of ANSI K61.1 requirements for Piping, Tubing, and Fittings.

Limitations of Tailoring: The use of ASME B31.5 in WTP systems required to be compliant with ANSI K61.1 is limited to isolation valves on the ammonia storage vessels. ASTM A536 material is considered compliant with the intent of ANSI K61.1 paragraph 5.6.6, but its use is limited to ammonia storage vessel isolation valve bonnets.

The following references shall be excluded:

40 CFR Part 280, Technical standards and corrective action requirements for owners and operators of underground storage tanks (UST)

Justification: The above reference is for underground storage tanks. WTP does not plan to use underground storage tanks for anhydrous ammonia. Therefore, these references will not be implemented for this project.

The following references shall be excluded:

CGA G-7, Guide to the Preparation of Precautionary Labeling and Marking of Compressed Gas Containers

ANSI/CGA V-1, American National Standard Compressed Gas Association Standard for Compressed Gas Cylinder Valve Outlet and Inlet Connections

Justification: The above references are for the use of cylinders and small (less than 1 ton) containers. WTP does not plan to use cylinders or small containers for anhydrous ammonia storage. Therefore, these references will not be implemented for this project.

The following references shall be excluded:

ANSI/ASAE S276, Slow Moving Vehicle Identification Emblem

ANSI/ASAE S338.2, Safety Chain for Towed Equipment

Justification: The above references are for the use of ammonia systems mounted on farm equipment. WTP does not plan to use farm equipment for anhydrous ammonia storage. Therefore, these references will not be implemented for this project.

26.0 ASME B31.3-1996, Process Piping

Revision: 1996

Sponsoring Organization: ASME

WTP Specific Tailoring

The following tailoring of ASME B31.3, *Process Piping*, is required for use by the WTP contractor as an Implementing Standard for: (1) the fabrication and installation of those portions of the C5V ductwork that are being embedded in concrete, (2) the use of ASME B31.3-2010, Appendix P, Alternative Rules for Evaluating Stress Range for evaluating stress ranges due to pressure cycling and operational load cycling, (3) the use of ASME B16.9 welding tees in accordance with ASME B31.3-2002, (4) use of vacuum box leak testing, (5) the ASME B31.3-1998, paragraph 345.2.3(c), allowance for not leak testing closure welds outside of a closed cell (black cell) and/or hard-to-reach area, (6) the test pressure that is used for piping systems subjected and designed to HPAV events, and (7) design for HPAV Detonation/Deflagration loads and associated thermal gradients.

- The tailored sections of ASME B31.3 applicable to embedded ductwork will only be utilized to the extent that it will cover the fabrication, installation, and inspection (and associated testing) of Category D fluid service piping being used as C5 ductwork. Air testing requirements for this ductwork will be compliant with ASME AG-1. Below is a description of those portions of ASME B31.3 that apply to fabrication, installation, and inspection of Category D fluid service piping and the sections of the SRD that they will apply to.
- The tailored sections of ASME B31.3 applicable to welding tees will only be used for ASME B16.9 welding tees. As long as the stress intensification factors from ASME B31.3-2002 are used in the stress analysis for the welding tees, welding tees fabricated to either the 1996 or the 2002 edition of ASME B31.3 can be used. Below is a description of those portions of ASME B31.3, Appendix D, Table D300, that apply to welding tees and the section of the SRD to which they will apply.
- The tailored paragraphs of ASME B31.3 applicable to vacuum box leak testing, in lieu of hydrostatic or pneumatic leak testing, will only be used to leak test full penetration circumferential piping field butt welds inside a closed cell (black cell) and/or hard-to-reach area as defined in Appendix M, out to the first isolation component outside the closed cell (black cell) and/or hard-to-reach area. Further, if the 100 % volumetric inspection using ultrasonic examination per ASME B31.3 paragraph 344.6, is conducted for welds to be vacuum box tested, then the ultrasonic examination shall be conducted using a method that creates and maintains a reproducible computerized image(s) of the entire weld in the axial and radial direction.
- The tailored paragraphs of ASME B31.3 adopting the provisions of ASME B31.3 (c) - 1998 Addendum paragraph 345.2.3(c) are applicable to all ASME B31.3 piping in all facilities except for closure welds in closed cells (black cell) and/or hard-to-reach areas.

Piping providing a confinement function in accordance with SRD 4.4-3 and 5.1-2 will comply with the following sections of ASME B31.3-1996, *Process Piping*. These sections of ASME B31.3 are applicable for embedded ductwork.

Chapter 3, Materials

Chapter 5, Fabrication

Table 341.3.2, Visual acceptance criteria for Category D fluid service piping

Justification: Due to wall thickness requirements of duct embedded in concrete, piping materials are required. ASME B31.3 will apply to materials, fabrication, and inspection standards as appropriate. Testing requirements for nuclear air treatment systems will be consistent with ASME AG-1.

Piping providing a confinement function in accordance with SRD 4.4-2 will comply with the following sections of ASME B31.3-1996, *Process Piping* with the following modification.

ASME B31.3-2010 Appendix P: Alternative Rules for Evaluating Stress Range will be used to evaluate stress ranges due to pressure cycling and operational load cycling to address ASME B31.3-1996 Section 301.10: Cyclic Effects.

Justification: ASME B31.3-1996 Section 301.10 specifies that fatigue due to pressure cycling, thermal cycling, and other cyclic loadings shall be considered in the design of piping. No additional methodology is provided by code of record. Therefore, consideration of cyclic loading other than displacement controlled loading shall be achieved through the alternative rules provided in ASME B31.3-2010 Appendix P. This alternate rule does not apply to HPAV affected confinement piping systems as addressed separately in this Appendix to the SRD.

Piping providing a confinement function in accordance with SRD 4.2-2 will comply with ASME B31.3-1996, *Process Piping*, with the following modification:

In Table D300, the description of welding tee per ASME B16.9 shall be revised so it is consistent with that shown in Table D300 of ASME B31.3-2002:

		Stress Intensification Factor [Notes (2), (3)]			
Description	**Flexibility Factor k**	**Out-of-Plane, i_o**	**In-Plane i_i**	**Flexibility Characteristic, h**	**Sketch**
Welded tee per ASME B16.9 [Notes (2), (4), (6), (11), (13)]	1	$\frac{0.9}{h^{2/3}}$	$3/4\ i_o + 1/4$	$3.1\frac{\overline{T}}{r_2}$	Same as ASME B31.3-1996

This means that for welding tees per ASME B16.9, note 11 in Table D300 is also changed to:

(11) If $r_x \geq 1/8D_b$ and $T_c \geq 1.5\overline{T}$, a flexibility characteristic of $4.4\,\overline{T}/r_2$ may be used.

Justification: The use of a lower flexibility characteristic for welding tees per ASME B.16.9 in accordance with ASME B31.3-2002 will increase both the out-of-plane and in-plane stress intensification factors. The increased stress intensification factors will reduce the allowable out-of-plane and in-plane

moments that can be applied to the welding tee and keep the calculated stress below the stresses allowable by ASME B31.3-1996.

Safety piping within the scope of SRD 4.2-2 shall comply with ASME B31.3-1996, Chapter V, Paragraph 345, using the following approach for vacuum box leak testing. Vacuum box leak testing, in lieu of hydrostatic or pneumatic leak testing, may be used to leak test full penetration circumferential piping, field butt welds inside a closed cell (black cell) and/or hard-to-reach area as defined in Appendix M, out to the first isolation component outside the closed cell (black cell) and/or hard-to-reach area, only under the following conditions:

Vacuum Box Leak Test Method - The vacuum box leak test shall be in accordance with a Bubble Test - Vacuum Box Technique method specified in ASME BPV Code, Section V, Article 10, Appendix II, subject to the requirements listed below:

(a) Sensitivity of the test shall be demonstrated to be not less than 1E-3 atm-ml/sec at 15 psig.

(b) The test pressure shall be a partial vacuum of at least 7 psi below atmosphere, applied to the outside of the weld.

(c) The required partial vacuum shall be maintained for at least 20 sec examination time.

In addition, the following limitations and restrictions shall apply to the application of vacuum box leak testing in lieu of a hydrostatic or a pneumatic leak test:

- Vacuum box leak testing will only be used to leak test circumferential piping field welds inside a closed cell (black cell) and/or hard-to-reach area (as defined in SRD Appendix M). This includes any welds in extensions of piping systems contained or originating in accessible areas between the closed cell (black cell) and/or hard-to-reach area boundary and the first isolation valve or device beyond the closed cell (black cell) and/or hard-to-reach area boundary;
- It shall only be used for piping field welds where required to avoid damage to components, ensure the safety to construction workers, perform leak tests of field welds where physical limitations prevent hydrostatic or pneumatic leak testing as prescribed in ASME B31.3-1996 paragraph 345.4 and paragraph 345.5 respectively;
- Pipe welds that are to be vacuum box leak tested will be assessed for suitability. The number of welds to be vacuum box leak tested shall be limited to a maximum of three welds between termination points (two termination or closure welds and one intermediate weld) on a given pipe system except where physical limitations prevent examination by hydrostatic or pneumatic leak testing. DOE will be informed of such exceptions, and may at its discretion and within 48 hours of being informed, respond to BNI on the suitability of the use of vacuum box leak testing for such instances. Termination points may be tanks, vessels, valves, etc. (Specifically excluded from the definition of termination points are junctions where the piping changes design class). This could be either the last two closure welds in a closed cell (black cell) and/or hard-to-reach area or the last closure weld in the closed cell (black cell) and/or hard-to-reach area and the last closure weld outside the closed cell (black cell) and/or hard-to-reach area. In addition, vacuum box leak testing would be permitted for the connection welds between construction modules if this is limited to one module-to-module weld per piping run within the cells. This is in addition to termination welds on the piping run. A module is defined as a pre-leak-tested subassembly containing multiple pipe spools;
- Vacuum box leak testing shall be limited to full penetration girth butt welds, on straight pipe or between straight pipe and pipe components of the same nominal pipe size and same wall thickness on

both sides of the weld at the weld location. The following configurations are candidates for vacuum box testing:

(a) Straight pipe to straight pipe connection butt welds

(b) Straight pipe to 90° elbow connection butt welds

(c) Straight pipe to 45° elbow connection butt welds

(d) Straight pipe to concentric reducer connection butt welds

(e) Straight pipe to eccentric reducer connection butt welds

(f) Straight pipe to butt welding tee connection butt welds

(g) Straight pipe to butt welding reduced outlet tee connection butt welds

(h) Straight pipe to valve nozzle connection butt welds

(i) Straight pipe to tank or vessel nozzle connection welds

(j) Straight pipe to safe-end of a weldolet connection butt welds - full penetration butt welded connection only

(k) Straight pipe to pipe cap connection butt welds

Prior to the application of vacuum box testing using any of the candidate configurations on piping butt welds at the WTP, the Contractor must successfully demonstrate to the DOE, for the candidate configuration, that (1) all portions of the weld to be inspected are visible and can be inspected in accordance with the ASME Boiler and Pressure and Vessel Code, Section V, Article 10, Appendix II - 1995; (2) the vacuum box can adequately maintain a partial vacuum of 7 psid; and (3) vacuum box leak testing can be accomplished in the time limits and other requirements established by this procedure. The DOE shall be advised at least 7 days in advance of any demonstration to qualify a new weld configuration so that they can witness the demonstration. The Contractor shall document any demonstration relied upon to justify the use of vacuum box leak testing on a new configuration. Further, vacuum box leak testing shall be conducted with a vacuum box that completely encapsulates the weld, at the test location;

- All welds shall be 100 % volumetrically inspected in accordance with ASME B31.3-1996, paragraphs 344.5 or 344.6. If the 100 % volumetric inspection is conducted using ultrasonic examination per ASME B31.3-1996 paragraph 344.6, then the ultrasonic examination shall be conducted using a method that creates and maintains a reproducible computerized image(s) of the entire weld in the axial and radial direction;
- It shall be limited to welds made using the Orbital welding machines. The only exception is that vacuum leak box testing may be used on manual welds if the 100 % volumetric inspection was conducted by radiography per ASME B31.3-1996 paragraph 344.5;
- The piping systems and or components on both sides of the weld to be vacuum box leak tested shall have been subjected to a hydrostatic leak test in accordance with ASME B31.3-1996 paragraph 345.4, a pneumatic test in accordance with ASME B31.3-1996 paragraph 345.5, a combination pneumatic-hydrostatic leak test in accordance with ASME B31.3-1996 paragraph 345.6, or in the case of components, leak tested in accordance with the Code or Standard applicable to the design of the component;
- At a minimum, a flexibility analysis in accordance with ASME B31.3-1996 paragraphs 319.4.2 (a) and (b) shall be required on any piping systems that contain welds that are to be vacuum leak box tested. In addition, a comprehensive flexibility analysis in accordance with ASME B31.3-1996 paragraphs 319.4.2 (c) and (d) shall be performed on any piping systems that contain welds that are to

be vacuum box leak tested when the piping systems have a design temperature greater than or equal to 150 °F;

- For manual welds, the requirements of ASME B31.3-1996 paragraph 344.7.1 (a) through (g) shall be invoked on any weld to be vacuum box leak tested with the exception that the requirement of subparagraph 344.7.1 (e) "... aided by liquid penetrant or magnetic particle examination when specified in the engineering design" shall not be required. For welds made using Orbital welding machines, the requirements of ASME B31.3-1996 paragraph 344.7.1 (a), (b), (c), (d), and (g) shall be invoked. The requirements of 344.7.1 (e) and (f) shall not be required. The implementation of these requirements shall be documented in the weld inspection report;
- Pipe welds and the associated line numbers that are to be vacuum leak box tested shall be identified in advance of the testing. This identification shall be documented in the controlled document Weld List, which must include this information prior to the initiation of any vacuum box leak testing associated with those welds and line numbers. It is understood that the controlled document Weld List may need to be revised and updated periodically through the construction phase of the WTP Project; and
- The following special requirements shall be placed on the training programs used to certify the technicians that will be conducting the vacuum box leak tests:
  1. The BNI Construction Manager shall pre-approve the technician qualifying examination(s) for vacuum box leak testing;
  2. The BNI Construction Manager shall pre-approve the qualifications of each Level III technician preparing or giving the examinations for vacuum box leak testing;
  3. DOE ORP at their discretion shall reserve the right to observe any and/or all practical leak test examinations and review of the results of any and/or all written vacuum box leak test examinations;
  4. The minimum topical content of each Level II examination shall be specified by BNI, and approved by DOE;
  5. The 80 % correct criteria for passing the examination shall apply to each part of the three part examinations that are to be given;
  6. BNI shall provide reasonable assurance that they will take adequate measures to assure the integrity of written examination is maintained; and
  7. There shall be several versions of each examination in use to assure Level II knowledge and ability concerning vacuum box leak testing is confirmed.

Justification: The requirement for the vacuum box leak test sensitivity is consistent with the ASME B31.3 requirement for a sensitive leak test as given in ASME B31.3-1996 paragraph 345.8 and for at least 7 psi vacuum and an examination time of at least 20 seconds. The limitations in using vacuum box leak testing better define when this method can be used. DOE ORP may further change the definition and application of these special vacuum box leak testing criteria based on the Contractor's experience with their use, or the Contractor's request for a change.

Piping system closure welds outside of a closed cell (black cell) and/or hard-to-reach area as defined in SRD Appendix M, shall comply with the requirements of ASME B31.3-1998, subparagraph 345.2.3(c). When ASME B31.3-1998, subparagraph 345.2.3(c) is invoked the following restrictions shall apply:

- It shall not be invoked on any closure welds on piping systems in a closed cell (black cell) and/or hard-to-reach area as defined in SRD Appendix M. This includes any welds in extensions of piping

systems contained or originating in a closed cell (black cell) and/or hard-to-reach area, between the closed cell (black cell) and/or hard-to-reach area boundary and the first isolation valve, or device beyond the closed cell (black cell) and/or hard-to-reach area boundary;

- It shall only be invoked on full penetration butt welds in straight pipe, full penetration butt welds at the safe-end of an equipment nozzle, or full penetration butt welds at the safe-end of branch connections. [The safe-end is defined as the piping to equipment nozzle connecting weld or the branch connection to branch piping connecting welds.];
- The requirements of ASME B31.3(c) - 1998, subparagraph 345.2.3 (c) shall be met;
- The piping systems and or components on both sides of the closure weld shall have been subjected to a hydrostatic leak test in accordance with ASME B31.3-1996 paragraph 345.4, a pneumatic leak test in accordance with ASME B31.3-1996 paragraph 345.5, a combination pneumatic-hydrostatic leak test in accordance with ASME B31.3-1996 paragraph 345.6, or in the case of components leak tested in accordance with the Code or Standard applicable to the design of the component;
- For manual welds, the requirements of ASME B31.3-1996 paragraph 344.7.1 (a) through (g) shall be invoked with the exception that the requirement of subparagraph 344.7.1 (e) "...aided by liquid penetrant or magnetic particle examination when specified in the engineering design" shall not be required. For welds made using the Orbital welding machines, the requirements of ASME B31.3 -1996 paragraph 344.7.1 (a), (b), (c), (d), and (g) shall be invoked. The implementation of these requirements shall be documented in the weld inspection report;
- Piping welds and the associated line numbers for which the closure weld classification is invoked shall be documented in a controlled document Weld List;
- Piping components may include mechanical elements other than piping; and
- In addition, BNI shall incorporate these requirements into the appropriate specification. DOE-ORP may further change the definition and application on the use of closure welds based on the Contractor's experience with their use or the Contractor's request for a change.

Justification: This change does not change the safety function of any pressure boundary components. The requirement to leak test pressure boundary field welds is primarily to ensure the reliability of the welds in addition to the reliability provided by the other required examinations. The exception allowed by ASME B31.3-1998, paragraph 345.2.3 that the final weld connecting piping systems or components which have been successfully tested in accordance with paragraph 345 need not be leak tested provided the weld is examined in-process in accordance with paragraph 344.7 (a), (b), (c), (d), and (g) and passes with 100 % radiographic examination in accordance with paragraph 344.5 or 100 % ultrasonic examination in accordance with paragraph 344.6 provides adequate assurance that the weld is reliable and leak tight. The change continues to provide adequate safety since it requires that all piping closure welds that are not leak tested are in-process examined and 100 % volumetrically examined which exceeds the requirements of ASME B31.3-1996 for closure welds that are leak tested. The inability to hydrostatically or pneumatically leak test these closure welds does not affect the soundness of the welds.

Exception to B31.3 Paragraph 302.2.4

Piping subjected to HPAV events, as defined in Appendix A, Section 5.4, and designed to withstand those events without controls will be leak tested at a pressure equal to the system design pressure (from the Mechanical line list) multiplied by the applicable factors in Section 345 of ASME B31.3-1996, *Process*

Piping. The HPAV pressure will be permitted to exceed the test pressure, which is an exception to Paragraph 302.2.4.

Justification: ASME B31.3 does not address highly impulsive pressure loading, and does permit the designer to perform detailed analysis for unusual situations, as indicated in Paragraph 304.7.2 for Unlisted Components. The design rules developed in Report 24590-WTP-RPT-ENG-07-011, Revision 2, ensure that the piping system will maintain pressure boundary under all conditions.

Design for Hydrogen Detonation/Deflagration Loads and Thermal Gradients

This section provides design criteria to determine the acceptable responses of piping systems and components to occasional loads that may result from HPAV events. Piping routes that fail to meet these criteria require preventive controls. The development of such criteria is permitted by B31.3 and is, therefore, not a deviation from it.

A best-estimate design tool may be used to determine the number of cycles for defined classes of HPAV events that differ in applicable structural design considerations for their accommodation subject to the following constraints to ensure consistency with safety analysis expectations:

1. The route specific factors that affect the potential for significant quantities of combustible gases to accumulate must be considered, including the maximum expected waste characteristics (i.e., combustible gas generation rate, temperature, viscosity), the proposed configuration of the route, and the related human and equipment failure rates.
2. An ignition probability of one is to be assumed at each maximum bubble size unless a technical basis for a lower probability is submitted to DOE-ORP and receives their concurrence.
3. The design tool shall not be used to exclude limiting events such as PRC-DDT that can occur for credible gas configuration conditions.
4. A defined class of events may be designated as structurally insignificant provided the included events are shown not to affect compliance with these Appendix C, B31.3 tailoring provisions.
5. Documentation of the model must be provided including the process for its application, the defined event classes, the parameters chosen, and the results.

For HPAV events, analysis will use 100/sec strain-rate dependent stress-strain curves for austenitic stainless steels (SS 304, 304L, 316 and 316L), which are used in the construction of WTP piping systems. Strain rate dependent properties will be developed based on a literature survey of academic, National Laboratory and industry information, covering the range of experimental test data to which the material in question will be subjected in service. Specifically, the experimental data requirements shall provide:

(a) A lower-bound estimate for strength over the strain rate and temperature regime of interest,

(b) Variation of yield strength with strain-rate and temperature,

(c) Variation of the rate of strain-hardening with strain-rate,

(d) Determination of a loading path-dependence to both the quasi-static (QS) and rate-dependent yield behavior,

(e) A loading path-dependence to both the quasi-static (QS) and rate-dependent strain-hardening behavior, and

(f) Development of an equation (or mathematical model) that describes the strength properties over the regime of interest.

(g) Scaled to the ASME Boiler and Pressure Vessel Code, Section VIII, Division 2, static, room temperature true stress-true strain curve.

Events Affecting Piping Located in Black Cells or Designated as Hard-To-Reach

Deflagrations events must meet the criteria of ASME B31.3-1996, *Process Piping*, and B31.3 Code Case 178, with appropriate consideration of deflagration pressure, sustained loads, and thermal gradients.

In evaluating Code Pressure Boundary for detonation events (including deflagration to detonation [DDT] transitions and reflected DDTs [PRC-DDT]), the straight pipe equivalent through-wall average strain will be limited to 0.2 % plastic strain using the 100/sec strain-rate dependent stress-strain curves, finite element time-history analysis, and end-of-life wall thickness.

For bends fabricated from straight pipe, the equivalent through-wall average strain will be limited to 0.2 % plastic strain using the 100/sec strain-rate dependent stress-strain curves, finite element time-history analysis, and end-of-life wall thickness.

Fittings (tees, elbows, reducers) manufactured in accordance with B31.3 Paragraph 303 and the standards listed in B31.3 Table 326.1 are considered to be as strong as the matching pipe, due to the burst test requirements of the standards. BNI will verify that burst test methods (in lieu of calculation methods) have been used to validate representative fitting designs.

Fatigue damage from high frequency oscillations, bar waves, thermal gradients, pressure changes, and traveling detonation waves must be evaluated.

B31.3 302.3.5 limits the sum of longitudinal stresses due to pressure, weight, and other sustained loads to S_h, the basic Code allowable at maximum temperature. Combining only longitudinal stresses, as is done in B31.3 paragraph 302.3.6, does not consider the possible combination of hoop and longitudinal (axial) effects. For highly dynamic pressures during a traveling wave detonation event, the axial and hoop effects due to pressure are not necessarily both tensile, so a departure from the normal B31.3 methods (sum of longitudinal stresses) must be made to allow for the possible combination of hoop and axial effects. Therefore, for traveling wave detonation events, the combination of hoop and axial effects must be considered without exceeding the 100/sec strain-rate dependent yield; the dynamic interaction ratio added to the dead weight interaction ratio shall not exceed 1. Since DDT and PRC-DDT events are point events, the requirement to combine hoop and axial effects does not apply.

Events Affecting Piping Not Located in Black Cells or Designated as Hard-To-Reach

Except as noted below, all HPAV requirements in the BC/HTR apply. The criteria below are limited to affected piping systems and components located in the HLW Process Cells, or in the Pretreatment facility Hot Cell and C3 area bulges that serve as extensions of the Hot Cell.

For HPAV events that are anticipated to result in a PRC-DDT, detonation, or DDT, the maximum pressure that produces a straight pipe (or 3D bend, whichever is limiting) equivalent through-wall average strain of 0.2 % plastic strain, as determined above for the BC/HTR, will be permitted to be 1.5 times higher. This results in a plastic through-wall average strain estimated to be less than 2.5 %.

Other Components

Stresses in the nozzle/vessel intersection or in the dipped line due to the traveling detonation wave loading will be combined with stresses due to normal loads (PJM operation, if applicable, thermal expansion, internal pressure, weight) and the primary results limited to 1.2 times the normal condition allowable stress for that type of stress, as permitted by the ASME Boiler and Pressure Vessel Code, Sections VIII-1 and VIII-2, for occasional loads.

Stresses in pipe supports inside BC/HTR areas under combined weight, thermal expansion, and detonation loading will be limited to B31.3 allowable stress (if a catalog support) or the AISC allowable stress (if a structural shape), for occasional loads.

Stresses in pipe supports outside BC/HTR areas under combined weight, thermal expansion, and detonation loading will be limited to 1.6 times the B31.3 or AISC normal condition allowable stress. The basis for the 1.6 is AISC N690, Table Q1.5.7.1 for extreme and higher loading.

In-line instrumentation, such as pressure transducers, will be shown to be acceptable up to DDT loading by limiting the maximum pressure to the maximum rated pressure of the instrumentation pressure boundary. Since these items are replaceable, i.e., there are none in Black Cells, their possible failure to function after a PRC-DDT is acceptable.

Components such as jumper connectors, valves, jet pump pairs, etc., whose function cannot be demonstrated by analysis alone may be qualified by a combination of analysis and test as follows:

1. Analyses per the criteria above as applicable for the component boundary.
2. Demonstrate other significant design aspects such as leak tightness of jumper connectors or valve operability, closure function and stem leakage by performing a bounding impulsive load test. Provide test acceptance criteria similar to those that would be used for the same functions in a seismic test.

Justification: ASME B31.3 does not address detonation pressure loading, but does permit the designer to perform detailed analysis for unusual situations, as indicated in Paragraphs 300(c)(3) and 304.7.2. The purpose of the criteria described above is to implement that provision.

ATTACHMENT 3

Deleted

ATTACHMENT 4

LAW SKID INTERFACE CONNECTIONS

SERVICE	NOZZLE	SIZE	INTERFACE
LVP-SKID-00002			
PROCESS GAS IN	N01	18"	FLG WN, A182-F316/316L, CL150, RF
PROCESS GAS OUT	N02	18"	FLG WN, A182-F316/316L, CL150, RF
AMMONIA/AIR IN	N03	8"	FLG WN, A182-F316/316L, CL300, RF
LVP-SKID-00003			
AMMONIA/AIR OUT	N04	8"	FLG WN, A182-F316/316L, CL 300, RF
AMMONIA GAS IN	N05	2"	FLG SW, A350LF2, CL300, XS, RF
C3 DUCT AIR IN	N01	8"	FLG WN, A182-F316/316L, CL150, SCH 10, RF
C3 DUCT AIR IN	N02	8"	FLG WN, A182-F316/316L, CL150, SCH 10, RF

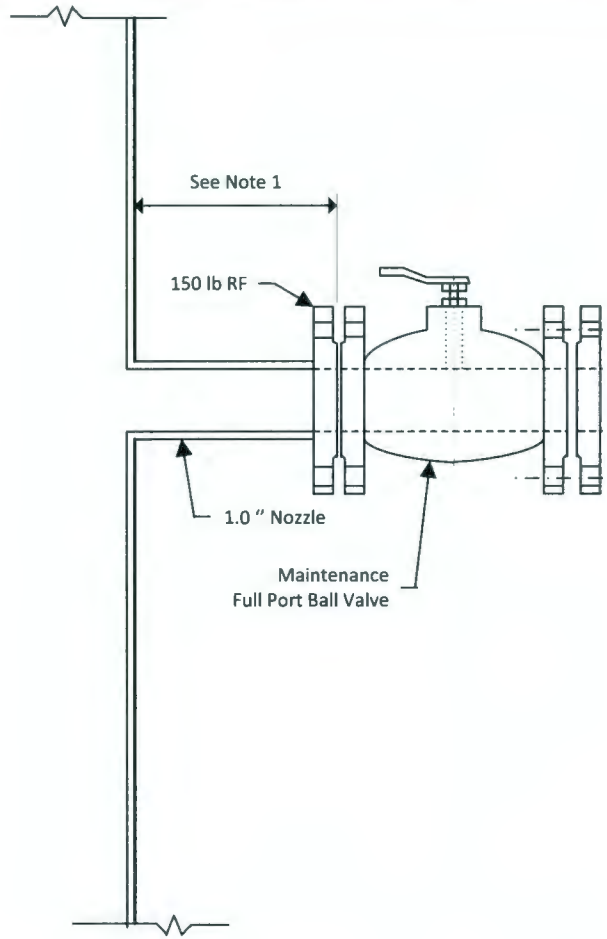

Note 1: *Nozzle length shall be at least 6 inches (- tolerance).
*There shall be at least 3 inches (- tolerance) of clearance, for tightening bolts, between the surface of the insulation jacketing and the underside of the flange.

Scale: None

Connection for Non-Routine Sample Extraction

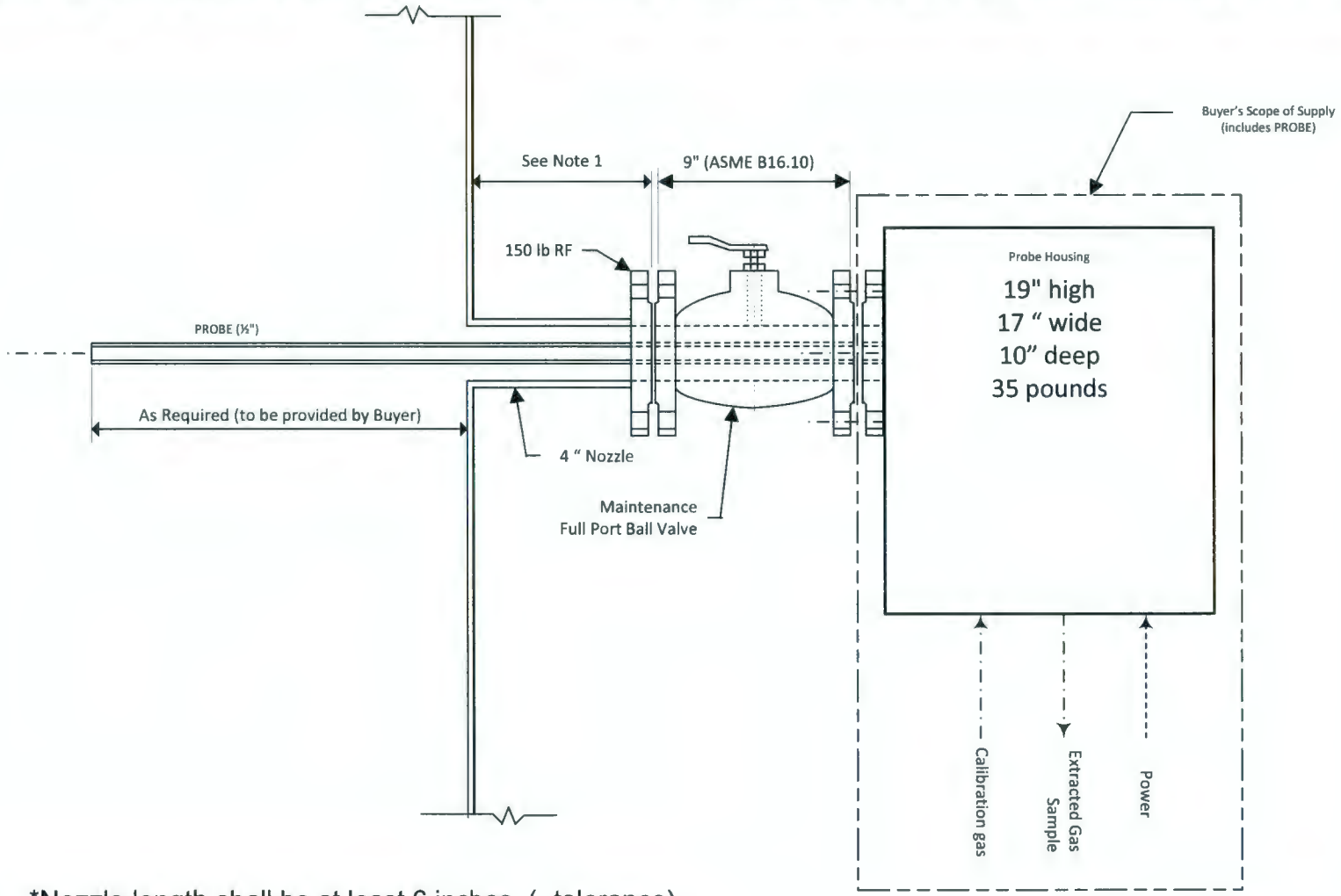

Note 1: *Nozzle length shall be at least 6 inches (- tolerance).
*There shall be at least 3 inches (- tolerance) of clearance, for tightening bolts, between the surface of the insulation jacketing and the underside of the flange.

Scale: None
Connection for Sample Extraction-Permanent Typical
Secondary Offgas Flange Connection for Gas Monitor Probe with Ball Valve for Maintenance
Gas Extraction Connection

Attachment 7

Certificate of Analysis for BASF Catalysts, LLC (VOCat 300S)

This Certificate of Analysis (COA) for VOCat 300S is representative of VOCat 300S catalyst used by Catholic Vitreous State Laboratory (VSL). Seller's use of the COA is described in Section 10.2.5.3.

Form #0697
Rev. 1

BASF
The Chemical Company

BASF
ENVIRONMENTAL CATALYST GROUP
9800 KELLNER ROAD
HUNTSVILLE, ALABAMA 35824
Main Phone # (256) 772-9373

CERTIFICATE OF ANALYSIS

LOT CONTROL NO: 3642401500 HSV PART NO: 166204-001 Customer Part Numt N/A

PART SIZE: 5.91 X 5.91 X 3 CPSI: A200 Customer P/O Numt **CUA-0000016866**

THIS IS TO CERTIFY THAT CATALYSTS DELIVERED MEET REQUIREMENTS OF:

CATALYST DRAWING: **PS - 1118** REV. **3** SPECIFICATION: **PS - 057** REV. **8**

FINAL INSPECTION PROC. **SOP - 0231** REV. **8**

PRECIOUS METAL CONCENTRATION (SAMPLE OF ALL) IN g/ft3

TOTAL PM CONCENTRATION	SPEC	SAMPLE
MAX. AVERAGE	NR	
MIN. AVERAGE	32.51	35.53
MIN AVERAGE TPM	NR	NR
MIN INDIVIDUAL TPM	28.31	33.88

DRY GAIN	SPEC	SAMPLE
MAX. AVERAGE	2.15	
MIN. AVERAGE	1.29	1.72

DIMENSIONAL (AS PER AQL) IN INCHES

WASHCOAT ADHESION (% LOSS)

SAMPLE OF 1	SPEC	SAMPLE
MAX. INDIVIDUAL	2.0	1.0

BET SURFACE AREA IN mm2/cc

SAMPLE OF 1	SPEC	SAMPLE
MIN. INDIVIDUAL	4.0	11.9

MIN. FLOW (AFCM)

	SPEC	SAMPLE
MIN. INDIVIDUAL	TBD	381

CATALYTIC ACTIVITY IN DEG F

SAMPLE OF 1	SPEC	SAMPLE
MAX HEXANE T 20	289	200.0
MAX HEXANE t 50	387	347.0
MIN HEXANE CONV. @ 450c	92	98.0

VISUAL (AT 1.5 AQL): ALL REQUIREMENTS FOR FLATNESS, CHIPS, WORKMANSHIP, GOUGES, CRACKS, WEB DEFECTS, AND PASSAGE DEFECTS HAVE BEEN MET OR EXCEEDED AS DEFINED ON THE APPROPRIATE DRAWING.

COMMENTS:

PROCESS QUALITY REPRESENTATIVE 6-1-09 DATE

5 Attachment 8

LAW TCO ~~& Ammonia/Air Dilution Skid~~ Embed As-Built Elevations

[Reference Drawing 24590-LAW-DB-S13T-00135]

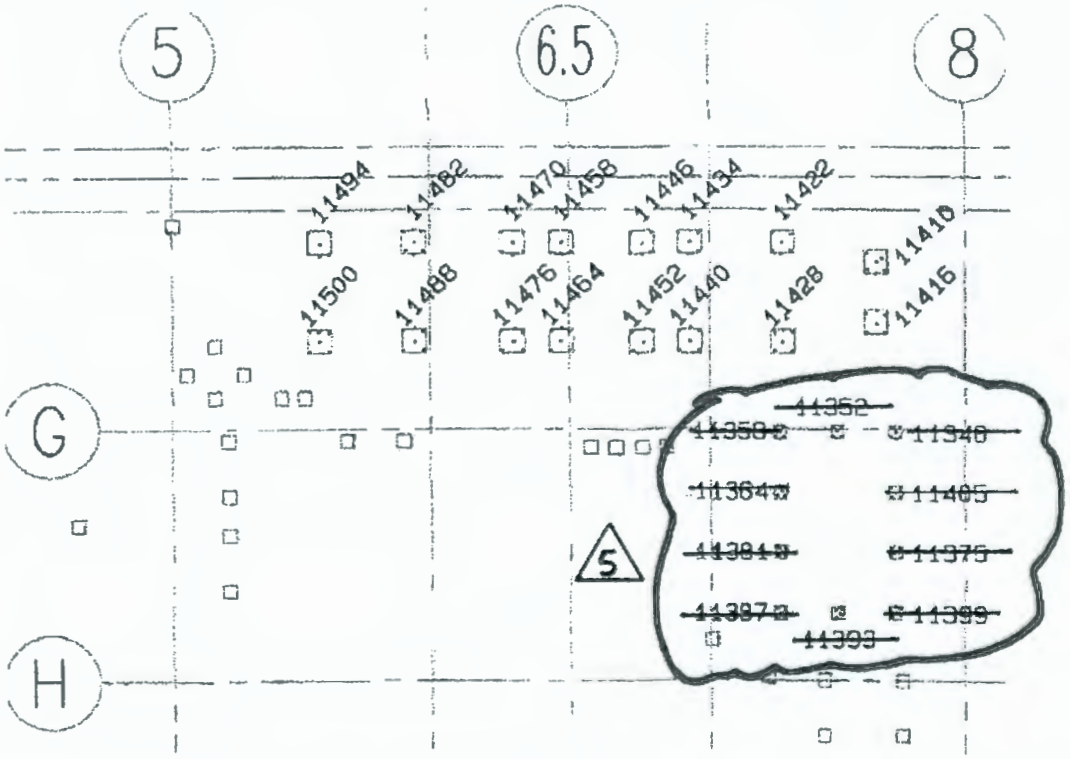

Embed #	Elevation	Embed #	Elevation
~~11346~~	~~47.984~~	11434	47.978
~~11352~~	~~47.986~~	11440	47.993
~~11358~~	~~47.898~~	11446	47.976
~~11364~~	~~47.994~~	11452	47.992
11375	47.991	11458	47.969
~~11381~~	~~47.993~~	11464	47.967
~~11387~~	~~47.985~~	11470	47.964
~~11393~~	~~47.978~~	11476	47.972
~~11399~~	~~47.986~~	11482	47.969
11410	47.963	11488	47.976
11416	47.973	11494	47.976
11422	47.963	11500	47.967
11428	47.973		

5

ATTACHMENT 9

Deleted

ATTACHMENT 10

Deleted

ATTACHMENT 11

SAMPLE Certificate of Conformance

I (Signer's Name) , (Signer's Title) of (SELLER), being duly authorized by (SELLER) to make this certification, do hereby certify that:

1) The (Equipment descriptive name - Example: Pressure Transmitter), Model No.(s) (or Equivalent Identification), supplied to the WTP Project for application as Nuclear Safety item(s) under (MR /P.O. No., or equivalent Buyer's purchase document no.) is (are) environmentally and seismically qualified in accordance with the requirements in the standards, specifications, data sheets and technical notes in said purchase documents and will meet the acceptance criteria stated for its safety function.

2) The said environmental and seismic qualification are based on the tests, analyses and results documented in: (List of documents establishing Environmental and Seismic Qualification to WTP requirements)

3) The particular items (Equipment descriptive name(s), Model (Model designation(s) and List of serial numbers or other identification of the particular items supplied for Nuclear Safety application to the WTP project) supplied for Nuclear Safety application at the WTP Project are identical to, or have been shown to be sufficiently similar to, the test sample(s) subjected to qualification testing/analyses documented in the qualification documents listed above, such that the data and results in the said documents are specifically applicable to the particular items supplied to the WTP project. (If necessary) Sufficient similarity between the test sample(s) and the safety related items supplied to WTP is documented in (Document title).

4) All modifications to the test sample and manufacturing methods which were necessary to establish qualification have been effected in the particular items supplied to the WTP Project.

5) All maintenance, surveillance requirements necessary to maintain the qualified status of the equipment in the installed configuration and service conditions at the WTP Project are stated in (Document Title).

6) All replacements of parts necessary to maintain the qualified status of the equipment in the installed configuration and service conditions at the WTP Project are stated in (Document Title).

Seller (Company name) _____

Signature of Authorized Representative _____

_____
Date Signed

Name of Authorized Representative _____

Title of Authorized Representative _____

ATTACHMENT 12

Deleted

ATTACHMENT 13

Deleted

Table III.10.E.B – LAW Vitrification Plant Tank Systems Description

Dangerous and/or Mixed Waste Tank Systems Name	Unit Designation	Engineering Description (Drawing Nos, Specification Nos, etc.)	Narrative Description, Tables & Figures	Maximum Capacity (gallons)
LAW Concentrate Receipt Process System LCP-VSL-00001 (LAW Melter 1 Concentrate Receipt Vessel) LCP-VSL-00002 (LAW Melter 2 Concentrate Receipt Vessel)	LCP	**24590-LAW** -M5-V17T-P0001, Rev 0 -M5-V17T-P0002, Rev 0 -M6-LCP-00001002, Rev 0 -M6-LCP-00001003, Rev 0 -M6-LCP-00002003, Rev 0 -M6-LCP-00002004, Rev 0 -MV-LCP-P0001, Rev 0 -MV-LCP-P0002, Rev 0 -MVD-LCP-P0004, Rev 1 -MVD-LCP-P0005, Rev 1 -N1D-LCP-P0001, Rev 1 -P1-P01T-00002, Rev 7	Section 4E.2.1; Tables 4-3 and 4-6; and Figures C1-1 and C1-3 of Operating Unit Group 10, Addendum C of this Permit.	LCP-VSL-00001 = 18,130 LCP-VSL-00002 = 18,130
LAW Melter Feed Process System LFP-VSL-00001 (Melter 1 Feed Preparation Vessel) LFP-VSL-00002 (Melter 1 Feed Vessel) LFP-VSL-00003 (Melter 2 Feed Preparation Vessel)	LFP	**24590-LAW** -M5-V17T-P0001, Rev 0 -M5-V17T-P0002, Rev 0 -M6-LFP-00001001, Rev 0 -M6-LFP-00001002, Rev 0 -M6-LFP-00001003, Rev 0 -M6-LFP-00001004, Rev 0 -M6-LFP-00001005, Rev 0 -M6-LFP-00001006, Rev 0 -M6-LFP-00003001, Rev 0 -M6-LFP-00003002, Rev 0	Section 4E.2.1; Tables 4-3 and 4-6; and Figures C1-1 and C1-3 of Operating Unit Group 10, Addendum C of this Permit.	LFP-VSL-00001 = 9,123 LFP-VSL-00002 = 9,123 LFP-VSL-00003 = 9,123 LFP-VSL-00004 = 9,123

Table III.10.E.B – LAW Vitrification Plant Tank Systems Description

Dangerous and/or Mixed Waste Tank Systems Name	Unit Designation	Engineering Description (Drawing Nos, Specification Nos, etc.)	Narrative Description, Tables & Figures	Maximum Capacity (gallons)
LFP-VSL-00004 (Melter 2 Feed Vessel)		-M6-LFP-00003003, Rev 0 -M6-LFP-00003004, Rev 0 -M6-LFP-00003005, Rev 0 -M6-LFP-00003006, Rev 0 -MV-LFP-P0001, Rev 0 -MV-LFP-P0002, Rev 0 -MV-LFP-P0004, Rev 0 -MV-LFP-P0005, Rev 0 -MVD-LFP-P0007, Rev 1 -MVD-LFP-P0008, Rev 1 -MVD-LFP-P0010, Rev 1 -MVD-LFP-P0011, Rev 1 -P1-P01T-00002, Rev 7 -N1D-LFP-00004, Rev 2 -N1D-LFP-00006, Rev 0		
LAW Secondary Off-gas/Vessel Vent Process System LVP-TK-00001 (LAW Caustic Collection Tank)	LVP	**24590-LAW** -M5-V17T-P0011, Rev 1 -P1-P01T-00004, Rev 5 ~~-VDCN M-13-00001~~MT-LVP-00005001, Rev 0 -MTD-LVP-00001, Rev 1 -N1D-LVP-00002, Rev 2	Section 4E.4.2.2; Tables 4-3 and 4-6; and Figures C1-1 and C1-3 of Operating Unit Group 10, Addendum C of this Permit.	LVP-TK-00001= 14,232
LAW Primary Off-gas Process System	LOP	**24590-LAW** -M5-V17T-P0007, Rev 0	Section 4E.4.2.1; Tables 4-3 and 4-6; and Figures C1-1 and C1-3 of	LOP-VSL-00001 = 9,056

Table III.10.E.B – LAW Vitrification Plant Tank Systems Description

Dangerous and/or Mixed Waste Tank Systems Name	Unit Designation	Engineering Description (Drawing Nos, Specification Nos, etc.)	Narrative Description, Tables & Figures	Maximum Capacity (gallons)
LOP-VSL-00001 (LAW Melter 1 SBS Condensate Vessel) LOP-VSL-00002 (LAW Melter 2 SBS Condensate Vessel)		-M5-V17T-P0008, Rev 0 -M6-LOP-P0001, Rev 2 -M6-LOP-P0002, Rev2 -MV-LOP-P0001, Rev 0 -MV-LOP-P0002, Rev 0 -MVD-LOP-00004, Rev 6 -MVD-LOP-00005, Rev 6 -N1D-LOP-00002, Rev 3 -P1-P01T-00002, Rev 7	Operating Unit Group 10, Addendum C of this Permit.	LOP-VSL-00002 = 9,056
LAW Vitrification Plant Radioactive Liquid Waste Disposal System RLD-VSL-00003 (Plant Wash Vessel) RLD-VSL-00004 (C3/C5 Drains/Sump Collection Vessel) RLD-VSL-00005 (SBS Condensate Collection Vessel)	RLD	**24590-LAW** -M5-V17T-P0014, Rev 2 -M6-RLD-00001001, Rev 0 -M6-RLD-00001002, Rev 0 -M6-RLD-00001003, Rev 0 -M6-RLD-00001004, Rev 0 -M6-RLD-00001005, Rev 0 -M6-RLD-00001006, Rev 0 -M6-RLD-00002001, Rev 1~~0~~ -M6-RLD-00002002, Rev 0 -M6-RLD-00002003, Rev 0 -M6-RLD-00002004, Rev 0 -M6-RLD-00002005, Rev 0 -M6-RLD-00003001, Rev 0	Section 4E.2.3; Tables 4-3 and 4-6; and Figures C1-1 and C1-3 of Operating Unit Group 10, Addendum C of this Permit.	RLD-VSL-00003 = 25,780 RLD-VSL-00004 = 7696 RLD-VSL-00005 = 25,780

Table III.10.E.B – LAW Vitrification Plant Tank Systems Description

Dangerous and/or Mixed Waste Tank Systems Name	Unit Designation	Engineering Description (Drawing Nos, Specification Nos, etc.)	Narrative Description, Tables & Figures	Maximum Capacity (gallons)
		-M6-RLD-00003002, Rev 2 -M6-RLD-00003003, Rev 2 -MVD-RLD-P0001, Rev 1 -MVD-RLD-P0006, Rev 2 -MVD-RLD-P0007, Rev 2 -MV-RLD-P0001, Rev 2 -MV-RLD-P0002, Rev 1 -MV-RLD-P0003, Rev 1 -P1-P01T-00001, Rev 4 -P1-P01T-00002, Rev 7 -N1D-RLD-00001, Rev 5 -N1D-RLD-00002, Rev 3 -N1D-RLD-00005, Rev 4		

Table III.10.H.A - LAW Plant Miscellaneous Unit System Description

Sub-system Description	Sub-system Designation	Engineering Description (Drawing Nos., Specification Nos., etc.)	Narrative Description, Tables and Figures
LAW Melter Process System LMP-MLTR-00001 (LAW Melter 1) LMP-MLTR-00002 (LAW Melter 2)	LMP	**24590-LAW** -CM-HC4-HXYG-00240-02-00014. Rev/ - -M0D-LMP-00001, Rev. 3 -M0D-LMP-00002, Rev. 3 -M6-LMP-00001001, Rev 0 -M6-LMP-00002001, Rev 0 -M6-LMP-00002002, Rev 0 -M6-LMP-00031001, Rev 0 -M6-LMP-00032001, Rev 0 -M6-LMP-00032002, Rev 0 -MF-LMP-00001, Rev. 0 -MF-LMP-00002, Rev. 0 -MF-LMP-00003, Rev. 0 -MF-LMP-00004, Rev. 0 -3PS-AE00-T0001, Rev. 6 -3PN-LMP-00002 -N1D-LMP-00001, Rev. 1 -P1-P01T-00002, Rev 7	Section 4E.2.2, Table C-8, and Figures C1-1, C1-3 and C1-21 in Operating Unit Group 10, Addendum C of this Permit.
LAW Primary Offgas Process System LOP-FCLR-00001 (Melter 1 Primary Film Cooler) LOP-FCLR-00002 (Melter 1 Standby Film Cooler No. 2) LOP-FCLR-00003 (Melter 2 Primary Film Cooler)	LOP	**24590-LAW** -P1-P01T-00002, Rev 7 -M6-LOP-00004001, Rev 0 -M6-LOP-00004002, Rev 0 -M6-LOP-00005001, Rev 0 -M6-LOP-00005002, Rev 0	Section 4E.4.2.1, Table C-8, and Figures C1-1, C1-3 and C1-21 in Operating Unit Group 10, Addendum C of this Permit.

Table III.10.H.A - LAW Plant Miscellaneous Unit System Description

Sub-system Description	Sub-system Designation	Engineering Description (Drawing Nos., Specification Nos., etc.)	Narrative Description, Tables and Figures
LOP-FCLR-00004 (Melter 2 Standby Film Cooler)			
LAW Primary Offgas Process System (Cont.) LOP-SCB-00001 (Melter 1 Submerged Bed Scrubber) LOP-SCB-00002 (Melter 2 Submergered Bed Scrubber)	LOP	**24590-LAW** -M5-V17T-P0007, Rev 0 -M5-V17T-P0008, Rev 0 -M6-LOP-00001001, Rev 0 -M6-LOP-00002001, Rev 0 -MK-LOP-P0001001, Rev 0 -MK-LOP-P0001002, Rev 0 -MK-LOP-P0001003, Rev 0 ~~-MKD-LOP-P0008, Rev 0~~MKD-LOP-00008, Rev 2 -NID-LOP-P0001, Rev 1 -P1-P01T-00002, Rev 7	Section 4E.4.2.1, Table C-8, and Figures C1-1 and C1-3 in Operating Unit Group 10, Addendum C of this Permit.
LAW Primary Offgas Process System (Cont.) LOP-WESP-00001 (Melter 1 Wet Electrostatic Precipitator - WESP) LOP-WESP-00002 (Melter 2 Wet Electrostatic Precipitator -WESP)	LOP	**24590-LAW** -M5-V17T-P0007, Rev 0 -M5-V17T-P0008, Rev 0 -M6-LOP-00001004, Rev 1 -M6-LOP-00002004, Rev 1 -NID-LOP-00003, Rev 3 -P1-P01T-00002, Rev 7 **24590-WTP** -3PS-MKE0-T0001, Rev 5	Section 4E.4.2.1, Table C-8, and Figures C1-1 and C1-3 in Operating Unit Group 10, Addendum C of this Permit.
LAW Secondary Offgas/Vessel Vent Process System	LVP	**24590-LAW** -M5-V17T-00010, Rev 4	Section 4E.4.2.2, Table C-8, Figures C1-1 and

Table III.10.H.A - LAW Plant Miscellaneous Unit System Description

Sub-system Description	Sub-system Designation	Engineering Description (Drawing Nos., Specification Nos., etc.)	Narrative Description, Tables and Figures
LVP-HEPA-00001A (Melter Offgas HEPA Filter) LVP-HEPA-00001B (Melter Offgas HEPA Filter) LVP-HEPA-00002A (Melter Offgas HEPA Filter) LVP-HEPA-00002B (Melter Offgas HEPA Filter) LVP-HEPA-00003A (Melter Offgas HEPA Filter)		-M6-LVP-00001003, Rev 0 -P1-P01T-00005, Rev 6	C1-3 in Operating Unit Group 10, Addendum C of this Permit.
LAW Secondary Offgas/Vessel Vent Process System (Cont.) LVP-SCO-00001 (Thermal Catalytic Oxidizer – located on LVP-SKID-00002)	LVP	**24590-LAW** -M6-LVP-00005002, Rev 3	Section 4E.4.2.2, Table C-8, Figures C1-1 and C1-3 in Operating Unit Group 10, Addendum C of this Permit.
LAW Secondary Offgas/Vessel Vent Process System (Cont.) LVP-SCR-00001 (NOx Selective Catalytic Reduction Unit – located on LVP-SKID-00002) LVP-HX-00001 (Catalytic Oxidizer Heat Exchanger – located on LVP-SKID-00002) LVP-HTR-00002 (Catalytic Oxidizer Electric Heater – located on LVP-SKID-00002)	LVP	**24590-LAW** -M6-LVP-00005002, Rev 3	Section 4E.4.2.2, Table C-8, and Figures C1-1 and C1-3 in Operating Unit Group 10, Addendum C of this Permit.
LAW Secondary Offgas/Vessel Vent Process System (Cont.) LVP-ADBR-00001A (Offgas Mercury Adsorber – located on LVP-SKID-00001)	LVP	**24590-LAW** -M5-V17T-00011, Rev 5 -M6-LVP-00004003, Rev 0 -P1-P01T-00005, Rev 6	Section 4E.4.2.2, Table C-8, and Figures C1-1 and C1-3 in Operating Unit Group 10, Addendum C of this Permit.

Table III.10.H.A - LAW Plant Miscellaneous Unit System Description

Sub-system Description	Sub-system Designation	Engineering Description (Drawing Nos., Specification Nos., etc.)	Narrative Description, Tables and Figures
LVP-ADBR-00001B (Offgas Mercury Adsorber – located on LVP-SKID-00001)			
LAW Secondary Offgas/Vessel Vent Process System (Cont.) LVP-SCB-00001 (Melter Offgas Caustic Scrubber)	LVP	**24590-LAW** -P1-P01T-00005, Rev 6 -M6-LVP-00002002, Rev 0	Section 4E.4.2.2, Table C-8, and Figures C1-1 and C1-3 in Operating Unit Group 10, Addendum C of this Permit.
LAW Secondary Offgas/Vessel Vent Process System (Cont.) LVP-HTR-00001A (Melter Offgas HEPA Preheater) LVP-HTR-00001B (Melter Offgas HEPA Preheater)	LVP	**24590-LAW** -M5-V17T-00010, Rev 4 -M6-LVP-00001002, Rev 0 -P1-P01T-00005, Rev. 6	Section 4E.4.2.2, Table C-8, and Figures C1-1 and C1-3 in Operating Unit Group 10, Addendum C of this Permit.
LAW Secondary Offgas/Vessel Vent Process System (Cont.) LVP-EXHR-00001A (Melter Offgas Exhauster) LVP-EXHR-00001B (Melter Offgas Exhauster) LVP-EXHR-00001C (Melter Offgas Exhauster)	LVP	**24590-LAW** -M5-V17T-00010, Rev 4 -M6-LVP-00001004, Rev 0 -M6-LVP-00001005, Rev 0 -M6-LVP-00001006, Rev 0 -P1-P01T-00005, Rev 6	Section 4E.4.2.2, Table C-8, and Figures C1-1 and C1-3 in Operating Unit Group 10, Addendum C of this Permit.

Table III.10.J.A – HLW Plant Miscellaneous Unit System Description

Sub-system Description	Sub-system Designation	Engineering Description (Drawing Nos., Specification Nos., etc.)	Narrative Description, Tables, and Figures
HLW Melter Process System HMP-MLTR-00001 (HLW Melter 1) HMP-MLTR-00002 (HLW Melter 2)	HMP	-M6-HMP-00001001, Rev 0 -M6-HMP-00001002, Rev 1 -M6-HMP-00003001, Rev 0 -M6-HMP-00004001, Rev 1 -M6-HMP-00006001, Rev 1 -M6-HMP-00006002, Rev 0 -M6-HMP-00007001, Rev 0 -M6-HMP-00008001, Rev 0 -M6-HMP-00013002, Rev 1 -M6-HMP-00013003, Rev 0 -M6-HMP-20001001, Rev 0 -M6-HMP-20001002, Rev 0 -M6-HMP-20003001, Rev 0 -M6-HMP-20004001, Rev 0 -M6-HMP-20006001, Rev 0 -M6-HMP-20008001, Rev 0 -M6-HMP-20013002, Rev 0 -M6-HMP-20013003, Rev 0 -M5-V17T-P0002, Rev 1 -M5-V17T-P20002, Rev 1 -M0D-HMP-00001, Rev 2 -M0D-HMP-00002, Rev 2 -MF-HMP-00001, Rev 0 -MF-HMP-00002, Rev 0 -MF-HMP-00003, Rev 0 -N1D-HMP-P0001, Rev 0 -P1-P01T-00002, Rev 7 -3PS-AE00-T0001, Rev 5	Section 4F.2.2; Table C-8; and Figures C1-1, C1-4, C1-27 and C1-54 in Operating Unit Group 10, Addendum C of this Permit.
Melter Offgas Treatment Process System HOP-FCLR-00001 (Melter 1 Offgas Film Cooler) HOP-FCLR-00002 (Melter 2 Offgas Film Cooler)	HOP	**24590-HLW** -M5-V17T-P0002, Rev1 -M5-V17T-P20002, Rev 1 -M6-HMP-00002001, Rev 0 -M6-HMP-00002002, Rev 0 -M6-HMP-20002001, Rev 0 -M6-HMP-20002001, Rev 0	Section 4F.4.2; Table C-8; and Figures C1-1, C1-4 and C1-27-in Operating Unit Group 10, Addendum C of this Permit.

Table III.10.J.A – HLW Plant Miscellaneous Unit System Description

Sub-system Description	Sub-system Designation	Engineering Description (Drawing Nos., Specification Nos., etc.)	Narrative Description, Tables, and Figures
HOP-FCLR-00003 (Melter 1 Standby Offgas Insert) HOP-FCLR-00004 (Melter 2 Standby Offgas Insert)		-3YD-HOP-00001[a]	
<u>Melter Offgas Treatment Process System (Cont.)</u> HOP-SCB-00001 (Melter 1 Submerged Bed Scrubber, SBS) HOP-SCB-00002 (Melter 2 Submerged Bed Scrubber, SBS)	HOP	**<u>24590-HLW</u>** -M5-V17T-P0003, Rev 1 -M5-V17T-P20003, Rev 1 -M6-HOP-00001001, Rev 0 -M6-HOP-00001002, Rev 0 -M6-HOP-00001003, Rev 0 -M6-HOP-20001001, Rev 0 -M6-HOP-20001002, Rev 0 -M6-HOP-20001003, Rev 0 -MKD-HOP-P0016, Rev 0 -MK-HOP-P0001001, Rev 0 -MK-HOP-P0001002, Rev 0 -MK-HOP-P0001003, Rev 0 -MK-HOP-P0001004, Rev 0 -N1D-HOP-P0010, Rev 0 -P1-P01T-00002, Rev 7 -3YD-HOP-00001[a] **<u>24590-WTP</u>** -3PS-MV00-T0001, Rev 5 -3PS-MV00-T0002, Rev 3 -3PS-MV00-T0003, Rev 3	Section 4F.4.2; Table C-8; and Figures C1-1 and C1-4 in Operating Unit Group 10, Addendum C of this Permit.
<u>Melter Offgas Treatment Process System (Cont.)</u> HOP-WESP-00001 (Melter 1 Wet Electrostatic Precipitator, WESP) HOP-WESP-00002 (Melter 2 Wet Electrostatic Precipitator, WESP)	HOP	**<u>24590-HLW</u>** -M5-V17T-P0003, Rev 1 -M5-V17T-P20003, Rev 1 -M6-HOP-00002, Rev 5 -M6-HOP-20002, Rev 6 -N1D-HOP-P0002, Rev 0 -P1-P01T-00004, Rev 7 -P1-P01T-00005, Rev 6 -3YD-HOP-00001[a]	Section 4F.4.2; Table C-8; and Figures C1-1 and C1-4 in Operating Unit Group 10, Addendum C of this Permit.

Table III.10.J.A – HLW Plant Miscellaneous Unit System Description

Sub-system Description	Sub-system Designation	Engineering Description (Drawing Nos., Specification Nos., etc.)	Narrative Description, Tables, and Figures
		24590-WTP -3PS-MKE0-T0001, Rev 5	
Melter Offgas Treatment Process System (Cont.) HOP-HEPA-00001A (Melter 1 Primary Offgas HEPA Filter) HOP-HEPA-00001B (Melter 1 Primary Offgas HEPA Filter) HOP-HEPA-00002A (Melter 1 Secondary Offgas HEPA Filter) HOP-HEPA-00002B (Melter 1 Secondary Offgas HEPA Filter) HOP-HEPA-00007A (Melter 2 Primary Offgas HEPA Filter) HOP-HEPA-00007B (Melter 2 Primary Offgas HEPA Filter) HOP-HEPA-00008A (Melter 2 Secondary Offgas HEPA Filter) HOP-HEPA-00008B (Melter 2 Secondary Offgas HEPA Filter)	HOP	**24590-HLW** -M5-V17T-P0003, Rev 1 -M5-V17T-P20003, Rev 1 -M6-HOP-00010, Rev 3 -M6-HOP-20010, Rev 4 -MAD-HOP-00010, Rev 5 -MAD-HOP-00011, Rev 5 -MAD-HOP-00012, Rev 5 -MAD-HOP-00013, Rev 5 -MAD-HOP-00014, Rev 5 -MAD-HOP-00015, Rev 5 -MAD-HOP-00016, Rev 5 -MAD-HOP-00017, Rev 5 -P1-P01T-00002, Rev 7 -3YD-HOP-00001[a] **24590-WTP** -3PS-MKH0-T0002, Rev 4	Section 4F.4.2; Table C-8; and Figures C1-1 and C1-4 in Operating Unit Group 10, Addendum C of this Permit.
Melter Offgas Treatment Process System (Cont.) HOP-ADBR-00001A (Melter 1 Activated Carbon Adsorber – located on Activated Carbon Adsorber Skid HOP-ADBR-00001) HOP-ADBR-00001B (Melter 1 Activated Carbon Adsorber – located	HOP	**24590-HLW** -M5-V17T-00004, Rev 5 -M5-V17T-20004, Rev 1 -M6-HOP-00003001, Rev 0 -M6-HOP-00003002, Rev 0 -M6-HOP-20003001, Rev 0 -M6-HOP-20003002, Rev 0 -MVD-HOP-00015, Rev 3 -MVD-HOP-00016, Rev 3	Section 4F.4.2; Table C-8; and Figures C1-1 and C1-4 in Operating Unit Group 10, Addendum C of this Permit.

Table III.10.J.A – HLW Plant Miscellaneous Unit System Description

Sub-system Description	Sub-system Designation	Engineering Description (Drawing Nos., Specification Nos., etc.)	Narrative Description, Tables, and Figures
on Activated Carbon Adsorber Skid HOP-ADBR-00001) HOP-ADBR-00002A (Melter 2 Activated Carbon Adsorber – located on Activated Carbon Adsorber Skid HOP-ADBR-00002) HOP-ADBR-00002B (Melter 2 Activated Carbon Adsorber – located on Activated Carbon Adsorber Skid HOP-ADBR-00002)		-N1D-HOP-00003, Rev 1 -P1-P01T-00002, Rev 7 **24590-WTP** -3PS-MWK0-T0001, Rev 5	
Melter Offgas Treatment Process System (Cont.) HOP-HEME-00001A (Melter 1 High Efficiency Mist Eliminator, HEME) HOP-HEME-00001B (Melter 1 High Efficiency Mist Eliminator, HEME) HOP-HEME-00002A (Melter 2 High Efficiency Mist Eliminator, HEME) HOP-HEME-00002B (Melter 2 High Efficiency Mist Eliminator, HEME)	HOP	**24590-HLW** -M5-V17T-P0003, Rev 1 -M5-V17T-P20003, Rev 1 -M6-HOP-00009001, Rev 0 -M6-HOP-00009002, Rev 0 -M6-HOP-20009001, Rev 0 -M6-HOP-20009002, Rev 0 -MVD-HOP-00007, Rev 5 -MV-HOP-P0002001, Rev 0 -MV-HOP-P0002002, Rev 0 -MV-HOP-P0002003, Rev 0 -N1D-HOP-P0001, Rev 0 -P1-P01T-00002, Rev 7 -3YD-HOP-00001[a]	Section 4F.4.2; Table C-8; and Figures C1-1 and C1-4 in Operating Unit Group 10, Addendum C of this Permit.
Melter Offgas Treatment Process System (Cont.) HOP-SCO-00001 (Thermal Catalytic Oxidizer – located on Catalyst SkidHOP-SKID-00005) HOP-SCO-00004 (Thermal Catalytic Oxidizer – located on Catalyst Skid HOP-SKID-00007)	HOP	**24590-HLW** -M5-V17T-00004, Rev 5 -M5-V17T-20004, Rev 1 -M6-HOP-00008001,Rev 0 -M6-HOP-00008002,Rev 0 -M6-HOP-00008003,Rev 0 -M6-HOP-20008001, Rev 0 -M6-HOP-20008002, Rev 0 -M6-HOP-20008003, Rev 0 -MKD-HOP-P0019, Rev 0 -MKD-HOP-P0020, Rev 0	Section 4F.4.2; Table C-8; and Figures C1-1 and C1-4 in Operating Unit Group 10, Addendum C of this Permit.

Table III.10.J.A – HLW Plant Miscellaneous Unit System Description

Sub-system Description	Sub-system Designation	Engineering Description (Drawing Nos., Specification Nos., etc.)	Narrative Description, Tables, and Figures
		-N1D-HOP-00004, Rev 5 -NID-HOP-00005, Rev 5 -P1-PO1T-00002, Rev 7 -3PS-MBTV-T0002, Rev 1 **24590-LAW** -3PS-MBTV-T0001, Rev 6~~5~~	
Melter Offgas Treatment Process System (Cont.) HOP-SCR-00001 (NOx Selective Catalytic Reducer – located on Catalyst Skid HOP-SKID-00005) HOP-SCR-00002 (NOx Selective Catalytic Reducer – located on Catalyst Skid HOP-SKID-00007)	HOP	**24590-HLW** -M5-V17T-00004, Rev 5 -M5-V17T-20004, Rev 1 -M6-HOP-00008001, Rev 0 -M6-HOP-00008002, Rev 0 -M6-HOP-00008003, Rev 0 -M6-HOP-20008001, Rev 0 -M6-HOP-20008002, Rev 0 -M6-HOP-20008003, Rev 0 -MKD-HOP-P0019, Rev 0 -MKD-HOP-P0020, Rev 0 -N1D-HOP-00004, Rev 5 -N1D-HOP-00005, Rev 5 -P1-PO1T-00002, Rev 7 -3PS-MBTV-T0002, Rev 1 **24590-LAW** -3PS-MBTV-T0001, Rev 6~~5~~	Section 4F.4.2; Table C-8; and Figures C1-1 and C1-4 in Operating Unit Group 10, Addendum C of this Permit.
Melter Offgas Treatment Process System (Cont.) HOP-HX-00001 (Catalyst Skid Preheater – located on Catalyst Skid HOP-SKID-00005) HOP-HX-00003 (Catalyst Skid Preheater – located on Catalyst Skid HOP-SKID-00007)	HOP	**24590-HLW** -M5-V17T-00004, Rev 5 -M5-V17T-20004, Rev 1 -M6-HOP-00008001, Rev 0 -M6-HOP-00008002, Rev 0 -M6-HOP-00008003, Rev 0 -M6-HOP-20008001, Rev 0 -M6-HOP-20008002, Rev 0 -M6-HOP-20008003, Rev 0 -MKD-HOP-P0019, Rev 0 -MKD-HOP-P0020, Rev 0 -N1D-HOP-00008, Rev 2 -P1-PO1T-P0002, Rev 7	Section 4F.4.2; Table C-8; and Figures C1-1 and C1-4 in Operating Unit Group 10, Addendum C of this Permit.

Table III.10.J.A – HLW Plant Miscellaneous Unit System Description

Sub-system Description	Sub-system Designation	Engineering Description (Drawing Nos., Specification Nos., etc.)	Narrative Description, Tables, and Figures
		-3PS-MBTV-T0002, Rev 1 **24590-LAW** -3PS-MBTV-T0001, Rev 6~~5~~	
Melter Offgas Treatment Process System (Cont.) HOP-HTR-00001 (Catalyst Skid Electric Heater – located on Catalyst Skid HOP-SKID-00005) HOP-HTR-00007 (Catalyst Skid Electric Heaters – located on Catalyst Skid HOP-SKID-00007)	HOP	**24590-HLW** -M5-V17T-00004, Rev 5 -M5-V17T-20004, Rev 1 -M6-HOP-00008001, Rev 0 -M6-HOP-00008002, Rev 0 -M6-HOP-00008003, Rev 0 -M6-HOP-20008001, Rev 0 -M6-HOP-20008002, Rev 0 -M6-HOP-20008003, Rev 0 -MKD-HOP-P0019, Rev 0 -MKD-HOP-P0020, Rev 0 -P1-PO1T-00002, Rev 7 -3PS-MBTV-T0002, Rev 1 -N1D-HOP-00011, Rev 0 **24590-LAW** -3PS-MBTV-T0001, Rev 6~~5~~	Section 4F.4.2; Table C-8; and Figures C1-1 and C1-4 in Operating Unit Group 10, Addendum C of this Permit.
Melter Offgas Treatment Process System (Cont.) HOP-ABS-00002 (Silver Mordenite Column) HOP-ABS-00003 (Silver Mordenite Column)	HOP	**24590-HLW** -M5-V17T-00004, Rev 5 -M5-V17T-20004, Rev 1 -M6-HOP-00008001, Rev 0 -M6-HOP-00008002, Rev 0 -M6-HOP-00008003, Rev 0 -M6-HOP-20008001, Rev 0 -M6-HOP-20008002, Rev 0 -M6-HOP-20008003, Rev 0 -MKD-HOP-00014, Rev 5 -MKD-HOP-00017, Rev 7 -NID-HOP-P0006, Rev 1 -P1-P01T-00001, Rev 9 -3PS-MBT0-TP001, Rev 2	Section 4F.4.2; Table C-8; and Figures C1-1 and C1-4 in Operating Unit Group 10, Addendum C of this Permit.

Table III.10.J.A – HLW Plant Miscellaneous Unit System Description

Sub-system Description	Sub-system Designation	Engineering Description (Drawing Nos., Specification Nos., etc.)	Narrative Description, Tables, and Figures
Melter Offgas Treatment Process System (Cont.) HOP-HTR-00001B (HEPA Preheater) HOP-HTR-00002A (HEPA Preheater) HOP-HTR-00005A (HEPA Preheater) HOP-HTR-00005B (HEPA Preheater)	HOP	**24590-HLW** -M5-V17T-P0003, Rev 1 -M5-V17T-P20003, Rev 1 -M6-HOP-00010, Rev 3 -M6-HOP-20010, Rev 4 -MED-HOP-00013, Rev 4 -3PS-MEE0-T0001, Rev 1	Section 4F.4.2; Table C-8; and Figures C1-1 and C1-4 in Operating Unit Group 10, Addendum C of this Permit.
Melter Offgas Treatment Process System (Cont.) HOP-HX-00002 (Silver Mordenite Preheater) HOP-HX-00004 (Silver Mordenite Preheater)	HOP	**24590-HLW** -M5-V17T-00004, Rev 5 -M5-V17T-20004, Rev 1 -M6-HOP-00003001, Rev 0 -M6-HOP-00003002, Rev 0 -M6-HOP-20003001, Rev 0 -M6-HOP-20003002, Rev 0 -N1D-HOP-00007, Rev 1 -P1-P01T-00002, Rev 7	Section 4F.4.2; Table C-8; and Figures C1-1 and C1-4 in Operating Unit Group 10, Addendum C of this Permit.
Melter Offgas Treatment Process System (Cont.) HOP-FAN-00001A (Booster Extraction Fan) HOP-FAN-00001B (Booster Extraction Fan) HOP-FAN-00001C (Booster Extraction Fan) HOP-FAN-00009A (Booster Extraction Fan)	HOP	**24590-HLW** -M5-V17T-00004, Rev 5 -M5-V17T-20004, Rev 1 -M6-HOP-00003001, Rev 0 -M6-HOP-00003002, Rev 0 -M6-HOP-20003001, Rev 0 -M6-HOP-20003002, Rev 0 -MAD-HOP-P0018, Rev 2 -P1-P01T-00001, Rev 9 **24590-WTP** -3PS-MACS-TP004, Rev 0	Section 4F.4.2; Table C-8; and Figures C1-1 and C1-4 in Operating Unit Group 10, Addendum C of this Permit.

Table III.10.J.A – HLW Plant Miscellaneous Unit System Description

Sub-system Description	Sub-system Designation	Engineering Description (Drawing Nos., Specification Nos., etc.)	Narrative Description, Tables, and Figures
HOP-FAN-00009B (Booster Extraction Fan) HOP-FAN-00009C (Booster Extraction Fan)			
Melter Offgas Treatment Process System (Cont.) HOP-FAN-00008A (Stack Extraction Fan) HOP-FAN-00008B (Stack Extraction Fan) HOP-FAN-00008C (Stack Extraction Fan) HOP-FAN-000010A (Stack Extraction Fan) HOP-FAN-000010B (Stack Extraction Fan) HOP-FAN-000010C (Stack Extraction Fan)	HOP	**24590-HLW** -M5-V17T-00004, Rev 5 -M5-V17T-20004, Rev 1 -M6-HOP-00008001, Rev 0 -M6-HOP-00008002, Rev 0 -M6-HOP-00008003, Rev 0 -M6-HOP-20008001, Rev 0 -M6-HOP-20008002, Rev 0 -M6-HOP-20008003, Rev 0 -MAD-HOP-00038, Rev 5 -P1-P01T-00005, Rev 6 **24590-WTP** -3PS-MACS-TP004, Rev 0	Section 4F.4.2; Table C-8; and Figures C1-1 and C1-4 in Operating Unit Group 10, Addendum C of this Permit.
Melter Offgas Treatment Process System (Cont.) HLW Stack	HOP	**24590-HLW** -M5-V17T-00004, Rev 5 -M5-V17T-20004, Rev 1 -M6-HOP-00008001, Rev 0 -M6-HOP-00008002, Rev 0 -M6-HOP-00008003, Rev 0 -M6-HOP-20008001, Rev 0 -M6-HOP-20008002, Rev 0 -M6-HOP-20008003, Rev 0	Section 4F.4.2; and Figures C1-1 and C1-4 in Operating Unit Group 10, Addendum C of this Permit.
Pulse Jet Ventilation System PJV-HTR-00002 (Pulse Jet Ventilation HEPA Electric Preheater)	PJV	**24590-HLW** -M6-PJV-00001001, Rev 0 -M6-PJV-00002001, Rev 0	

Table III.10.J.A – HLW Plant Miscellaneous Unit System Description

Sub-system Description	Sub-system Designation	Engineering Description (Drawing Nos., Specification Nos., etc.)	Narrative Description, Tables, and Figures
PJV-HEPA-00004B (PJV System HEPA Filter (Standby Primary)) PJV-HEPA-00005B (PJV System HEPA Filter (Standby Secondary)) PJV-HEPA-00004A (PJV System HEPA Filter (Primary)) PJV-HEPA-00005A (PJV System HEPA Filter (Secondary)) PJV-FAN-00002A (Pulse Jet Vent Extraction Fan) PJV-FAN-00002B (Pulse Jet Vent Extraction Fan)			
Process Vessel Vent Extraction System PVV system contains ancillary equipment only.	PVV	**24590-HLW** -M6-PVV-00001, Rev 4 -M6-PVV-20001, Rev 2	

[a]System Descriptions are maintained in the Administrative Record, and are listed here for information only.

Quarter Ending Dec 31, 2017 24590-LAW-PCN-ENV-17-011

Hanford Facility RCRA Permit Modification Notification Form
Part III, Operating Unit 10
Waste Treatment and Immobilization Plant

Index

Page 2 of 3: Hanford Facility RCRA Permit, Part III, Operating Unit 10, Waste Treatment and Immobilization Plant

The purpose of this Class 1 Prime Permit Modification is to update Table III.10.H.G of the Dangerous Waste Permit (DWP) with three new LAW Penetration Seal Locations

Submitted by Co-Operator:

Roger J. Landon 12/5/17
Roger J. Landon Date

Reviewed by ORP Program Office:

J. F. Grindstaff 1/4/18
J. F. Grindstaff Date

Quarter Ending Dec 31, 2017

24590-LAW-PCN-ENV-17-011

Hanford Facility RCRA Permit Modification Notification Form	
Unit:	Permit Part:
Waste Treatment and Immobilization Plant	**Part III, Operating Unit 10**

Description of Modification:

This Class 1 prime modification requests Ecology approval and incorporation of updated information into DWP Permit Table: III.10.H.G

DWP Permit Table III.10.H.G

Add	Penetration Seal Locations:	To Update	Table III.10.H.G LAW Plant Penetration Seal Location

Room Number	Sequence Number
L-0124	01410
L-0125	01428
L-0126	01454

This PCN updates information in the DWP Permit Conditions to reflect current penetration seal locations at the LAW Facility, and updates room numbers in Table III.10.H.G to reflect the General Arrangement drawings in the DWP.

WAC 173-303-830 Modification Class:	Class 1	Class 1	Class 2	Class 3
Please mark the Modification Class:		X		

Enter relevant WAC 173-303-830, Appendix I Modification citation number:
Enter wording of WAC 173-303-830, Appendix I Modification citation:

In accordance with WAC 173-303-830(4)(d)(i), this modification notification is requested to be reviewed and approved as a Class 1 modification. WAC 173-303-830(4)(d)(ii)(A) states. "Class 1 modifications apply to minor changes that keep the permit current with routine changes to the facility or its operation. These changes do not substantially alter the permit conditions or reduce the capacity of the facility to protect human health or the environment. In the case of Class 1 modifications, the director may require prior approval."

Modification Approved/Concur: ☑ Yes ☐ Denied (state reason below)

Reason for denial:

Reviewed by Ecology:

S. Dahl 2/14/18 Date

Permit, except Permit Condition III.10.H.5.e.i., which will be incorporated into Operating Unit Group 10, Chapter 6 of this Permit. All information provided under this permit condition must be consistent with information provided pursuant to Permit Conditions III.10.H.5.b., c., d., e., and f., III.10.C.3.e. and III.10.C.11.b., as approved by Ecology:

III.10.H.5.e.i Integrity assessment program and schedule for the LAW Vitrification System will address the conducting of periodic integrity assessments on the LAW Vitrification System over the life of the system, as specified in Permit Condition III.10.H.5.b.ix. and WAC 173-303-640(3)(b), in accordance with WAC 173-303-680, and descriptions of procedures for addressing problems detected during integrity assessments. The schedule must be based on past integrity assessments, age of the system, materials of construction, characteristics of the waste, and any other relevant factors [WAC 173-303-640(3)(b), in accordance with WAC 173-303-680 and WAC 173-303-806(4)(i)(i)(B)].

III.10.H.5.e.ii Detailed plans and descriptions, demonstrating the leak detection system is operated so that it will detect the failure of either the primary or secondary containment structure or the presence of any release of dangerous and/or mixed waste or accumulated liquid in the secondary containment system within twenty-four (24) hours [WAC 173-303-640(4)(c)(iii)]. Detection of a leak of at least 0.1 gallons per hour within twenty-four (24) hours is defined as being able to detect a leak within twenty-four (24) hours. Any exceptions to this criteria must be approved by Ecology in accordance with WAC 173-303-680, WAC 173-303-640(4)(c)(iii), and WAC 173-303-806(4)(i)(i)(b).

A. Dangerous waste pipe penetrations that require a penetration seal in accordance with the International Building Code (IBC) and DOE-STD-1066, DOE Standard for Fire Protection Design Criteria, or meet ventilation sealing requirements identified in Table III.10.H.G, are not required to meet the 0.1 gallons per hour within twenty-four (24) hours leak detection rate for those sections of piping that are in contact with approved silicone or equivalent low-permeability seal material.

B. Piping on either side of the penetration seal must meet the requirements of III.10.H.5.e.ii.

C. Revisions (including additions or deletions) to Table III.10.H.G will be submitted to Ecology for review and approval pursuant to Conditions III.10.C.2.e and III.10.C.2.f. Addition of penetration seal locations to Table III.10.H.G. will be approved by Ecology prior to installation of the penetration seal.

Table III.10.H.G LAW Plant Penetration Seal Location

Row Number	Room Number	Orientation	Discipline	Sequence Number
1.	L-~~000~~0112	E	PD	02097
2.	L-~~000~~0123	E	PD	01823
3.	L-~~000~~0123	E	PD	01834
4.	L-~~000~~0123	E	PD	01828
5.	L-~~000~~0123	E	PD	01837
6.	L-~~000~~0123	E	PD	01822
7.	L-~~000~~0123	E	PD	01824

Row Number	Room Number	Orientation	Discipline	Sequence Number
8.	L-0000123	E	PD	01826
9.	L-0000123	E	PD	01821
10.	L-0000123	E	PD	01825
11.	L-0000123	E	PD	01827
12.	L-0000123	E	PD	01836
13.	L-0000123	E	PD	01820
14.	L-0000123	E	PD	01832
15.	L-0000123	S	PD	01797
16.	L-0000124	E	PD	01843
17.	L-0000124	E	PD	01844
18.	L-0000124	E	PD	01845
19.	L-0000124	E	PD	01842
20.	L-0000124	E	PD	01847
21.	L-0000124	E	PD	01841
22.	L-0000124	E	PD	01846
23.	L-0000124	E	PD	01850
24.	L-0000124	E	PD	01848
25.	L-0000124	E	PD	01852
26.	L-0000124	E	PD	01840
27.	L-0000124	E	PD	01839
28.	L-0000124	E	PD	01849
29.	L-0000124	S	PD	01801
30.	L-0000125	E	PD	01858
31.	L-0000125	E	PD	01859
32.	L-0000125	E	PD	01860
33.	L-0000125	E	PD	01857
34.	L-0000125	E	PD	01862
35.	L-0000125	E	PD	01856
36.	L-0000125	E	PD	01861
37.	L-0000125	E	PD	01865
38.	L-0000125	E	PD	01863
39.	L-0000125	E	PD	01867
40.	L-0000125	E	PD	01855
41.	L-0000125	E	PD	01854
42.	L-0000125	E	PD	01864
43.	L-0000126	S	PD	01807
44.	L-0000201	F	PD	02405
45.	L-0000201	S	PD	02406
46.	L-0000202	F	PD	02495

Row Number	Room Number	Orientation	Discipline	Sequence Number
47.	L-0000216	W	PD	02674
48.	L-0000220	E	PD	02709
49.	L-0000301	F	PD	03319
50.	L-0000301	S	PD	03437
51.	L-0000301	S	PD	04149
52.	L-0000301	S	PD	04141
53.	L-000101A	F	PD	01291
54.	L-000101A	F	PD	01292
55.	L-000101A	W	PD	01971
56.	L-000226B	F	PD	02445
57.	L-000226B	F	PD	02444
58.	L-000304F	F	PD	03278
59.	L-000304F	F	PD	03277
60.	L-B00001B	E	EQ	80908
61.	L-B00001B	S	PD	00196
62.	L-B00001B	S	PD	00201
63.	LC000201	F	PD	02430
64.	L-0124	W	PD	01410
65.	L-0125	W	PD	01428
66.	L-0126	W	PD	01454

III.10.H.5.e.iii Detailed operational plans and descriptions, demonstrating that spilled or leaked waste and accumulated liquids can be removed from the secondary containment system within twenty-four (24) hours [WAC 173-303-806(4)(i)(i)(B)].

III.10.H.5.e.iv Descriptions of operational procedures demonstrating appropriate controls and practices are in place to prevent spills and overflows from the LAW Vitrification System or containment systems in compliance with WAC 173-303-640(5)(b)(i) through (iii), in accordance with WAC 173-303-680 and WAC 173-303-806(4)(i)(i)(B);

III.10.H.5.e.v Description of procedures for investigation and repair of the LAW Vitrification System [WAC 173-303–640(6) and WAC 173-303-640(7)(e) and (f), in accordance with WAC 173-303-680, WAC 173-303-320, WAC 173-303-806(4)(a)(v), and WAC 173-303-806(4)(a)(ii)(B)].

III.10.H.5.e.vi Updated Chapter 4, Narrative Description, Tables and Figures as identified in Permit Tables III.10.H.A and III.10.H.B, as modified pursuant to Permit Condition

Hanford Facility RCRA Permit Modification Notification Forms

Part VI, POST-Closure Unit Group 1 (PCU-1)

300 AREA PROCESS TRENCHES

Index

Page 2 of 4: Part VI, PCU-1, Unit Specific Conditions

Page 3 of 4 Part VI, PCU-1, Chapter 3.0, Groundwater Monitoring Plan

Reviewed by DOE Program Office:

Alison B Carter 3-12-18

DOE Program Office Name Date

Hanford Facility RCRA Permit Modification Form	
Unit: 300 Area Process Trenches	Permit Part Part VI, PCU-1, Unit Specific Conditions

Description of Modification:

Page 3

Update the chapter change history information regarding Chapter 3.0.

WAC 173-303-830 Modification Class	Class 1	Class 1	Class 2	Class 3
Please mark the Modification Class:	X			

Enter relevant WAC 173-303-830, Appendix I Modification citation number:
A.1. Administrative and informational changes

Modification Concurrence: ☒ Yes ☐ No

Reason for non-concurrence:

Reviewed by Ecology:

S. L. Dahl-Crumpler 3/15/18 Date

Hanford Facility RCRA Permit Modification Form	
Unit: 300 Area Process Trenches	Permit Part Part VI, PCU-1, Chapter 3.0, Groundwater Monitoring Plan

Description of Modification:

Page 43

The GW Monitoring chapter refers documents outside of the Permit (external documents) for information on inspection, maintenance, and training requirements. The proposed change replaces the external references with new references. The new references correspond to documents within the Permit.

WAC 173-303-830 Modification Class	Class 1	Class 1	Class 2	Class 3
Please mark the Modification Class:		X		

The permittees request that proposed changes be reviewed and approved as a Class 1-prime modification pursuant to WAC 173-303-830(4)(d)

Modification Approved: ☒ Yes ☐ No

Reason for denial:

Reviewed by Ecology:

S. L. Dahl-Crumpler 3/15/18 Date

Revise the Following Pages:

Revise CUG-1, Unit Specific Conditions as shown herein.
Revise CUG-1, Chapter 3.0 as shown herein.