SGW-60778
Revision 0

300-FF-5 Operable Unit Stage B Uranium Sequestration System Installation Report

Prepared for the U.S. Department of Energy
Assistant Secretary for Environmental Management

Contractor for the U.S. Department of Energy
under Contract DE-AC06-08RL14788

CH2MHILL
Plateau Remediation Company

P.O. Box 1600
Richland, Washington 99352

Approved for Public Release;
Further Dissemination Unlimited

SGW-60778
Revision 0

300-FF-5 Operable Unit Stage B Uranium Sequestration System Installation Report

Date Published
January 2019

Prepared for the U.S. Department of Energy
Assistant Secretary for Environmental Management

Contractor for the U.S. Department of Energy
under Contract DE-AC06-08RL14788

CH2MHILL
Plateau Remediation Company
P.O. Box 1600
Richland, Washington 99352

APPROVED
By Lynn M. Ayers at 1:29 pm, Jan 24, 2019

Release Approval | Date

Approved for Public Release;
Further Dissemination Unlimited

TRADEMARK DISCLAIMER

Reference herein to any specific commercial product, process, or service by tradename, trademark, manufacturer, or otherwise, does not necessarily constitute or imply its endorsement, recommendation, or favoring by the United States Government or any agency thereof or its contractors or subcontractors.

This report has been reproduced from the best available copy.

Printed in the United States of America

Contents

1 Introduction 1-1

1.1 Purpose 1-1
1.2 Site Description 1-3
1.3 Objectives 1-5
1.4 Sequestration System Overview 1-5

2 Sequestration System Design and Installation 2-1

2.1 Injection Wells 2-1
2.1.1 Unexpected Conditions 2-17
2.2 Monitoring Wells 2-20
2.2.1 Unexpected Conditions 2-27
2.2.2 Summary 2-27
2.3 Decommissioned Wells 2-28
2.3.1 Chemical Mixing Skids 2-29
2.3.2 Site Infrastructure 2-32
2.3.3 Unexpected Conditions 2-34
2.3.4 Summary 2-34
2.4 River Pumps 2-34
2.4.1 Unexpected Conditions 2-36
2.4.2 Summary 2-37
2.5 Chemical Tanks 2-37
2.5.1 Unexpected Conditions 2-38
2.5.2 Summary 2-38
2.6 Electrical Resistivity Tomography Network 2-39
2.6.1 Unexpected Conditions 2-42
2.6.2 Summary 2-42
2.7 Sample Collection System 2-42
2.7.1 Unexpected Conditions 2-43
2.7.2 Results 2-44
2.8 Data Loggers 2-44
2.8.1 Unexpected Conditions 2-44
2.8.2 Results 2-44

3 Summary and Lessons Learned 3-1

3.1 Summary of Installation Duration and Resources 3-1
3.2 Post-Job Review 3-1
3.2.1 Define Work Scope 3-1
3.2.2 Hazard Identification and Work Planning 3-2

3.2.3 Work Packages and Hazard Control 3-2
3.2.4 Work Processes and Execution 3-2
3.2.5 Feedback 3-3
4 References 4-1

Appendix

A Site Layout Plans and Equipment Design Sheets ..... A-i

Figures

Figure 1-1. 300 Area Industrial Complex and the Stage A and Stage B Enhanced Attenuation Areas 1-2
Figure 1-2. Cross Section of the General Geologic Features of the 300 Area Industrial Complex 1-4
Figure 2-1. Injection Wells and Injection Zones in the Stage B Treatment Area 2-2
Figure 2-2. Terra Sonic™ Drill Rig in the 300 Area 2-3
Figure 2-3. Collecting Soil Samples 2-3
Figure 2-4. Monitoring Drill Cuttings 2-4
Figure 2-5. Geophysical Logging 2-6
Figure 2-6. Injection Well Construction Detail without ERT Electrodes 2-8
Figure 2-7. Injection Well Construction Detail with ERT Electrodes 2-10
Figure 2-8. Monitoring Wells for the Stage B Uranium Sequestration 2-21
Figure 2-9. Well Vault for a Monitoring Well Equipped with Electrical Resistivity Tomography Electrodes 2-24
Figure 2-10. 2009 Infiltration Wells to be Decommissioned Chemical Mixing Skids and Site Infrastructure 2-28
Figure 2-11. Chemical Mixing Skids in the 300 Area 2-30
Figure 2-12. Inline Filter Packs for Chemical Mixing Skids 2-30
Figure 2-13. Aerial Photograph of Color-Coded Injection hoses 2-31
Figure 2-14. Aerial Photograph of the Stage B Treatment Area 2-33
Figure 2-15. Submersible Pump, Fish Screen, and Mounting Skidplate 2-35
Figure 2-16. Installation of Submersible Pump and Skidplate 2-36
Figure 2-17. River Pump Hose Flaws Discovered after CCD Testing 2-36
Figure 2-18. Chemical Storage Tanks 2-38
Figure 2-19. ERT Monitoring Zones and ERT-Fitted Wells in the Stage B Treatment Area 2-40
Figure 2-20. Electrode Installation Detail (Not to Scale) 2-41
Figure 2-21. ERT Electrode Installed on the Well Casing 2-41
Figure 2-22. ERT-Fitted Well Casing as it is Lowered into the Borehole 2-42
Figure 2-23. Sampling System Manifold 2-43
Figure 2-24. Data Logger Setup for Groundwater Monitoring Wells 2-44

Tables

Table 2-1. Injection Boreholes with Continuous Soil Sampling 2-5
Table 2-2. Injection Boreholes with Opportunistic Soil Sampling 2-5
Table 2-3. Construction Specifications for Typical Injection Well without ERT Electrodes 2-7
Table 2-4. Construction Specifications for Typical Injection Well with ERT Electrodes 2-9
Table 2-5. Injection Well Development Summary 2-12
Table 2-6. Stage B Injection Wells 2-14
Table 2-7. Monitoring Wells Geophysically Logged 2-22
Table 2-8. Construction Specifications for Typical Monitoring Wells without ERT Electrodes 2-22
Table 2-9. Construction Specifications for Typical Monitoring Wells with ERT Electrodes 2-22
Table 2-10. Periodically Rewetted Zone Monitoring Wells Development Summary 2-24
Table 2-11. Aquifer Monitoring Well Development Summary 2-25
Table 2-12. Stage B PRZ Monitoring Wells 2-25
Table 2-13. Stage B Aquifer Monitoring Wells 2-26
Table 2-14. Summary of Project Resources Needed for the Injection and Monitoring Wells 2-27
Table 2-15. Well Construction Summary for the 300-FF-5 OU PVC Wells to be Decommissioned 2-28
Table 2-16. Summary of Project Resources Needed for the Chemical Mixing Skids and Site Infrastructure 2-34
Table 2-17. Summary of Project Resources Needed for the River Pumps 2-37
Table 2-18. Summary of Project Resources Needed for the Chemical Storage Tanks 2-38
Table 2-19. Summary of Project Resources Needed for the Electrical Resistivity Tomography Network 2-42
Table 3-1. Summary of Installation Duration and Resources by Component 3-1

This page intentionally left blank.

Terms

AFD	adjustable-frequency drive
bgs	below ground surface
CERCLA	*Comprehensive Environmental Response, Compensation, and Liability Act of 1980*
CAT	construction acceptance test
CCD	construction completion document
DOE	U.S. Department of Energy
EA	enhanced attenuation
ERT	electrical resistivity tomography
ID	identification
IH	industrial hygiene
LEL	lower explosive limit
OU	operable unit
PNNL	Pacific Northwest National Laboratory
POD	plan of the day
PRZ	periodically rewetted zone
PVC	polyvinyl chloride
RCT	radiological control technician
Rlm	Ringold Formation member of Wooded Island – lower mud unit
RMA	radioactive material area
ROD	record of decision
Rwie	Ringold Formation member of Wooded Island – unit E
RWP	radiological work permit
USFWS	U.S. Fish and Wildlife Service
VOC	volatile organic compound
WBS	work breakdown structure

This page intentionally left blank.

1 Introduction

The 300 Area encompasses approximately 105 km^2 (40 mi^2) adjacent to the Columbia River in the southeastern portion of the Hanford Site. Within the 300 Area is the smaller 300 Area Industrial Complex that was home to uranium fuel production as well as experimental and laboratory facilities. Solid waste generated from uranium fuel fabrication and laboratory processes was placed in burial grounds and shallow landfills while large volumes of liquid waste were discharged to ponds and trenches designed for infiltration to the underlying soil. One outcome of these past activities was uranium contamination within the soil and groundwater. Most of the 300 Area Industrial Complex wastes sites have been remediated, but a persistent uranium groundwater plume remains.

Under the *Comprehensive Environmental Response, Compensation, and Liability Act of 1980* (CERCLA), the 300 Area is divided into three operable units (OUs) for remedial actions: two soil sources (300-FF-1 and 300-FF-2) and one groundwater source (300-FF-5). The 300-FF-5 OU encompasses groundwater contamination from the 300-FF-1 OU and 300-FF-2 OU waste sites and does not include groundwater contamination that migrates into the 300 Area from other areas. The remedial actions for source and groundwater OUs are presented in the 300 Area record of decision (ROD) (EPA and DOE, 2013, *Hanford Site 300 Area Record of Decision for 300-FF-2 and 300-FF-5, and Record of Decision Amendment for 300-FF-1*). One of the selected remedies common to the 300-FF-1, 300-FF-2, and 300-FF-5 OUs is enhanced attenuation (EA) of uranium using sequestration in the lower vadose zone, periodically rewetted zone (PRZ), and top of the aquifer. Uranium sequestration is intended to reduce the mobility of uranium and is planned for the location deemed the highest source of contamination to the uranium groundwater plume.

The uranium sequestration remedy required by the ROD for 1.2 ha (3 ac) of the 300 Area Industrial Complex was planned in two stages (Stage A and Stage B) per DOE/RL-2014-13-ADD2, *Remedial Design Report/Remedial Action Work Plan Addendum for the 300 Area Groundwater*. Stage A was completed in November 2015 and consisted of infiltration and injection of polyphosphate solutions within an approximately 0.3 ha (0.75 ac) area. Sample data collected during and after the Stage A applications indicated a high likelihood of treatment effectiveness; therefore, Stage B is being performed in a similar manner in an adjacent area of approximately 0.9 ha (2.25 ac). Figure 1-1 is an aerial view of the 300 Area Industrial Complex showing the Stage A and Stage B EA areas. The figure also shows the adjacent waste disposal facilities that contributed to the underlying contamination.

1.1 Purpose

The purpose of this report is to document the final design and installation of the Stage B uranium sequestration system. This report also provides information and lessons learned on the installation of the Stage B system. The system is designed to inject polyphosphate solutions in the lower vadose zone and PRZ to sequester mobile uranium. System design and installation criteria are found in SGW-60243, *300-FF-5 Operable Unit Stage B Uranium Sequestration Functional Requirements*. Site layout plans and equipment design sheets are contained in Appendix A. Sequestration activities were performed in accordance with requirements established in the remedial design report/remedial action work plan (DOE/RL-2014-13-ADD2); the sampling and analysis plan (DOE/RL-2014-42, *300-FF-5 Operable Unit Remedy Implementation Sampling and Analysis Plan*); and the sampling and analysis plan addendum for Stage B (DOE/RL-2014-42-ADD1, *300-FF-5 Operable Unit Remedy Implementation Sampling and Analysis Plan Addendum for Stage B Uranium Sequestration*).

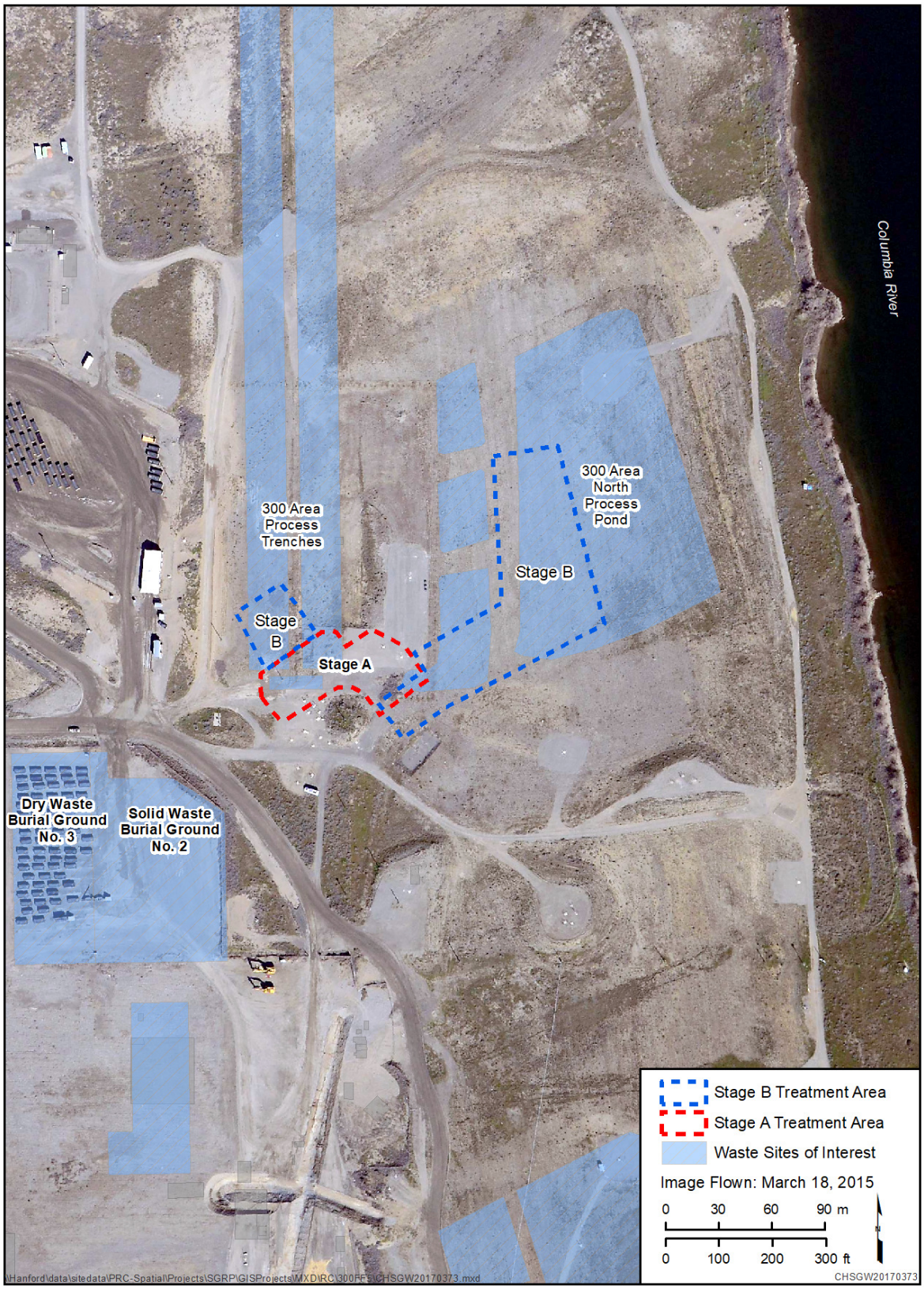

Figure 1-1. 300 Area Industrial Complex and the Stage A and Stage B Enhanced Attenuation Areas

1.2 Site Description

This section provides a general summary of site geology and hydrogeology. This information will help explain the technologies and methods that were used to install the Stage B uranium sequestration system.

Figure 1-2 shows a cross section of the general geologic features in the 300 Area Industrial Complex. The ground surface in the 300 Area Industrial Complex is relatively flat, except for a steep slope on the east down to the Columbia River, which is the only surface water feature in the area. The surface elevation for the 300 Area Industrial Complex is approximately 115 m (377 ft).

The vadose zone comprises backfill materials and unconsolidated sand and gravels of the Hanford formation. In the 300 Area Industrial Complex, the average thickness of the vadose zone is 10 m (33 ft). However, the vadose zone thickness varies with the seasonal stages of the Columbia River and distance inland from the river.

The unconfined aquifer occurs in the highly permeable, gravel dominated Hanford formation and in the underlying, less permeable sands and gravels of the Ringold Formation member of Wooded Island – unit E (Rwie). In some parts of the 300 Area, a low permeability, fine-grained interval occurs at the top of the Rwie. It is common to find these fine-grained sediments reworked in the overlying Hanford formation as rip-up clasts of clays and silts. The rip-up clasts range in size from a pebble to several feet in diameter and thickness. Below the Rwie, the Ringold Formation member of Wooded Island – lower mud unit (Rlm) is a confining layer characterized by very low permeability, fine-grained sediment. This hydrologic unit prevents further downward movement of groundwater contamination to the deeper aquifers. The thickness of the unconfined aquifer along the Columbia River shoreline is about 25 m (80 ft).

Seasonal variations in Columbia River stage cause changes in groundwater elevations in the aquifer resulting in variable saturation of the vadose zone. These fluctuating groundwater elevations create the PRZ shown in Figure 1-2. Generally, wells adjacent to the river within the 300 Area Industrial Complex show higher variation in response to river stage changes than wells located at increasing distance from the shoreline. The PRZ in the 300 Area Industrial Complex ranges from 0.32 to 2.2 m (1.0 to 7.2 ft) in thickness, depending upon operations of Priest Rapids Dam upriver and McNary Dam downriver from the Hanford Site.

In the 300 Area Industrial Complex, the vadose zone, PRZ, and upper part of the unconfined aquifer occur within the unconsolidated sands and gravels of the Hanford formation. Groundwater flow velocities through the upper aquifer in the Hanford formation are rapid, up to 18 m/d (59 ft/d). The groundwater flow direction changes in response to changes in the river stage. Groundwater flow direction beneath the 300 Area Industrial Complex is predominantly to the south-southeast when the river stage is low (typical throughout most of the year). However, when the river stage is high (typically late spring and early summer), groundwater flow direction may change to south-southwest.

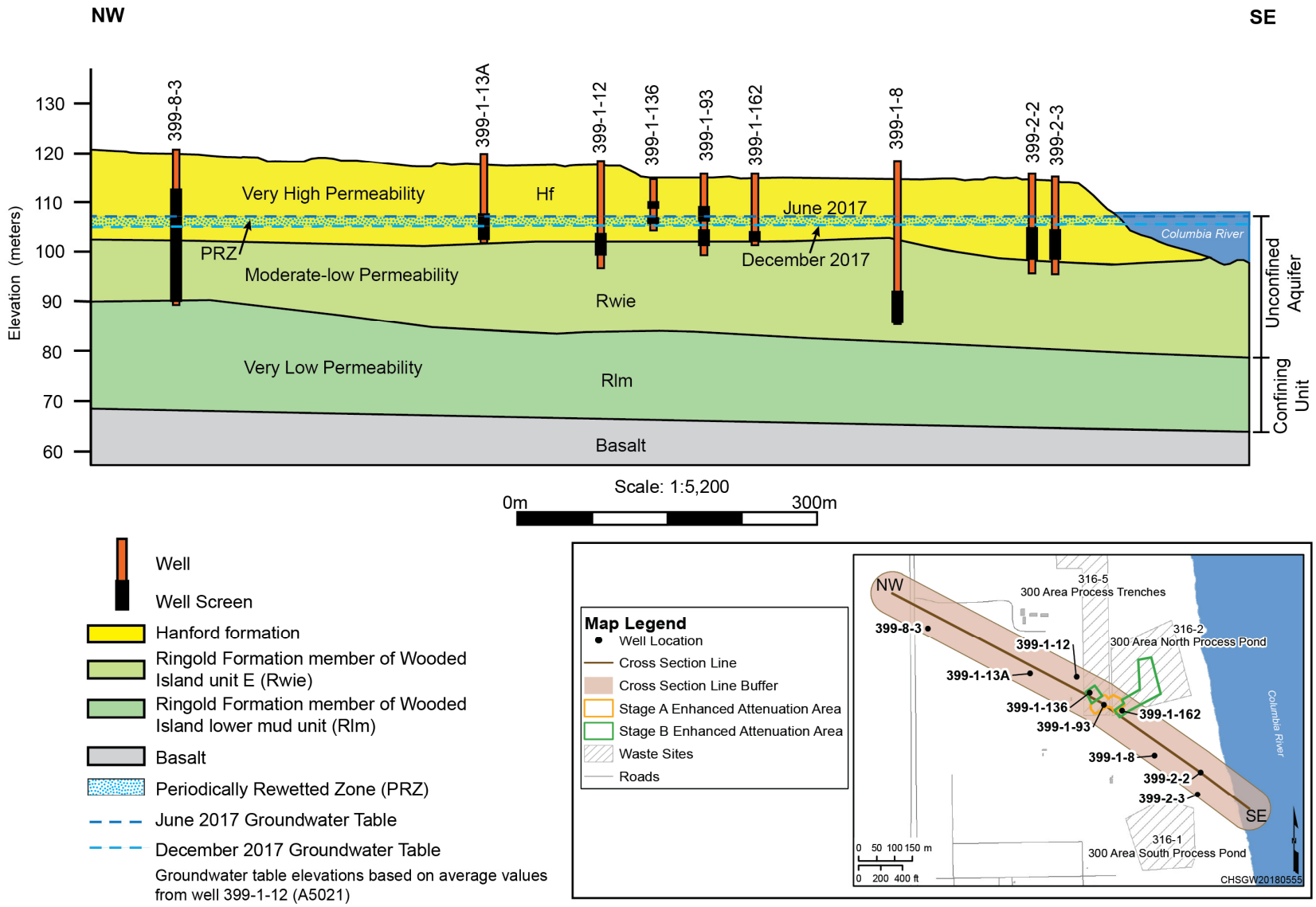

Note: 5x vertical exaggeration. Geologic solids model generated using Hanford South Geologic Framework Model surfaces. Wells are projected onto Cross Section.

CHSGW20180555

Figure 1-2. Cross Section of the General Geologic Features of the 300 Area Industrial Complex

1.3 Objectives

The objective of uranium sequestration using polyphosphate solutions is to reduce the mobility of uranium in the vadose zone and PRZ that is the primary source of contamination in groundwater. The specific objective of the Stage B polyphosphate applications includes the following (DOE/RL-2014-42-ADD1): deliver three pore volumes of polyphosphate solution uniformly to the lower vadose zone and the PRZ to sequester uranium.

1.4 Sequestration System Overview

EA using uranium sequestration is being implemented in a 1.2 ha (3 ac) area in two stages, A and B. The Stage A EA treated a 0.3 ha (0.75 ac) area, while the Stage B EA treated the remaining 0.9 ha (2.25 ac) area. The purpose of Stage A was to perform the remedy on a small area, evaluate effectiveness in meeting the goals of the ROD (EPA and DOE, 2013), and establish a baseline from which to refine operations for the larger Stage B area. Based on an evaluation of Stage A results, which included a series of data quality objective meetings, the implementation process has been refined for Stage B (Section 2.1.1 of DOE/RL-2014-42-ADD1).

The Stage B treatment area consists of two segments where injections will be conducted: a small western segment and a larger eastern segment (Figure 1-1). The segments are equipped with 48 injection wells, 24 monitoring wells instrumented with data loggers, and an electrical resistivity tomography (ERT) network. Injection and monitoring wells are constructed with permanent casing and well screens. The injection wells are drilled to an elevation of 101 m (328.3 ft), with a lower screened interval nominally from elevations of 105 to 106.5 m (341.3 to 346.1 ft) and an upper screened interval nominally from elevations of 108 to 109.5 m (351 to 355.9 ft) separated by a 1.5 m (5 ft) long blank section of casing.

The monitoring wells located in the Stage B treatment area are designed as monitoring pairs: one screened in the PRZ and the other screened in the aquifer. Downgradient monitoring wells located outside the treatment area are screened in the aquifer. The PRZ monitoring wells have a screened interval nominally from elevations of 104.5 to 106.0 m (339.6 to 344.5 ft). The aquifer monitoring wells have a screened interval nominally from elevations of 102.5 to 104 m (333.1 to 338 ft).

Eighteen injection and monitoring wells were completed with ERT electrodes attached along the outside of the well casing. ERT will be used to monitor the advancement of the injectant-wetting front in the vadose zone and PRZ. Groundwater monitoring will be conducted using 24 new and existing monitoring wells in and around the treatment area, along with other nearby wells in the 300 Area Industrial Complex that may be affected, to assess changes in uranium concentrations and the lateral spread of phosphate. A sample collection system was constructed to facilitate collection of the groundwater samples.

This page intentionally left blank.

2 Sequestration System Design and Installation

This chapter describes the design and installation of infrastructure required for the Stage B uranium sequestration system, which is composed of the following components:

- Injection wells
- Monitoring wells
- Decommissioned wells
- Chemical mixing skids and other site infrastructure
- Submersible pumps placed in the Columbia River
- Chemical storage tanks
- ERT network
- Sample collection system with purge water storage tanks
- Data loggers

Each of these components was installed as a separate part of the work breakdown structure (WBS) for the project in accordance with SGW-60243. The following sections focus on design and installation of each component of the system.

2.1 Injection Wells

The following subsections describe drilling and construction of injection wells within the Stage B EA area. The wells were installed in accordance with SGW-60287, *Description of Work for the Installation of Forty Eight Injection Wells and Nineteen Monitoring Wells in the 300-FF-5 Groundwater Operable Unit*, *FY17*.

The Stage B injection system consists of 48 combination lower vadose zone/PRZ injection wells. Each injection well is constructed with two screened intervals, with one screen in the lower portion of the vadose zone and one screen in the PRZ. The screens are separated by a bentonite or grout seal to allow isolated injection (using inflatable packers) into either the lower vadose zone or the PRZ. Figure 2-1 shows the location of the 48 injection wells within the Stage B treatment area.

The injection wells were drilled using a Terra Sonic™ 150 cc sonic drill rig. Figure 2-2 shows the drill rig onsite in the Stage B area. The 48 injection wells were drilled between February 1 and May 23, 2017. A summary of the drilling and well construction details is contained in SGW-61092, *Borehole Summary Report for the Installation of Forty Eight Injection wells and Nineteen Monitoring Wells at the 300-FF-5 Operable Unit, FY 2017*.

The target drilled depth of the injection well boreholes was approximately 10.8 m (35.0 ft) below ground surface (bgs) for the wells without ERT electrodes and 13.6 m (44.2 ft) bgs for the wells with ERT electrodes. Geologic archive samples were collected at 1.5 m (5 ft) intervals (or at changes in lithology) and placed in pint jars and chip trays. Archive samples were not collected at depths where high radiological contamination was present, or where drill cuttings were interpreted as backfill. Figure 2-3 shows drillers collecting a soil sample.

™Terra Sonic is a registered trademark of Terra Sonic International, Marietta, Ohio.

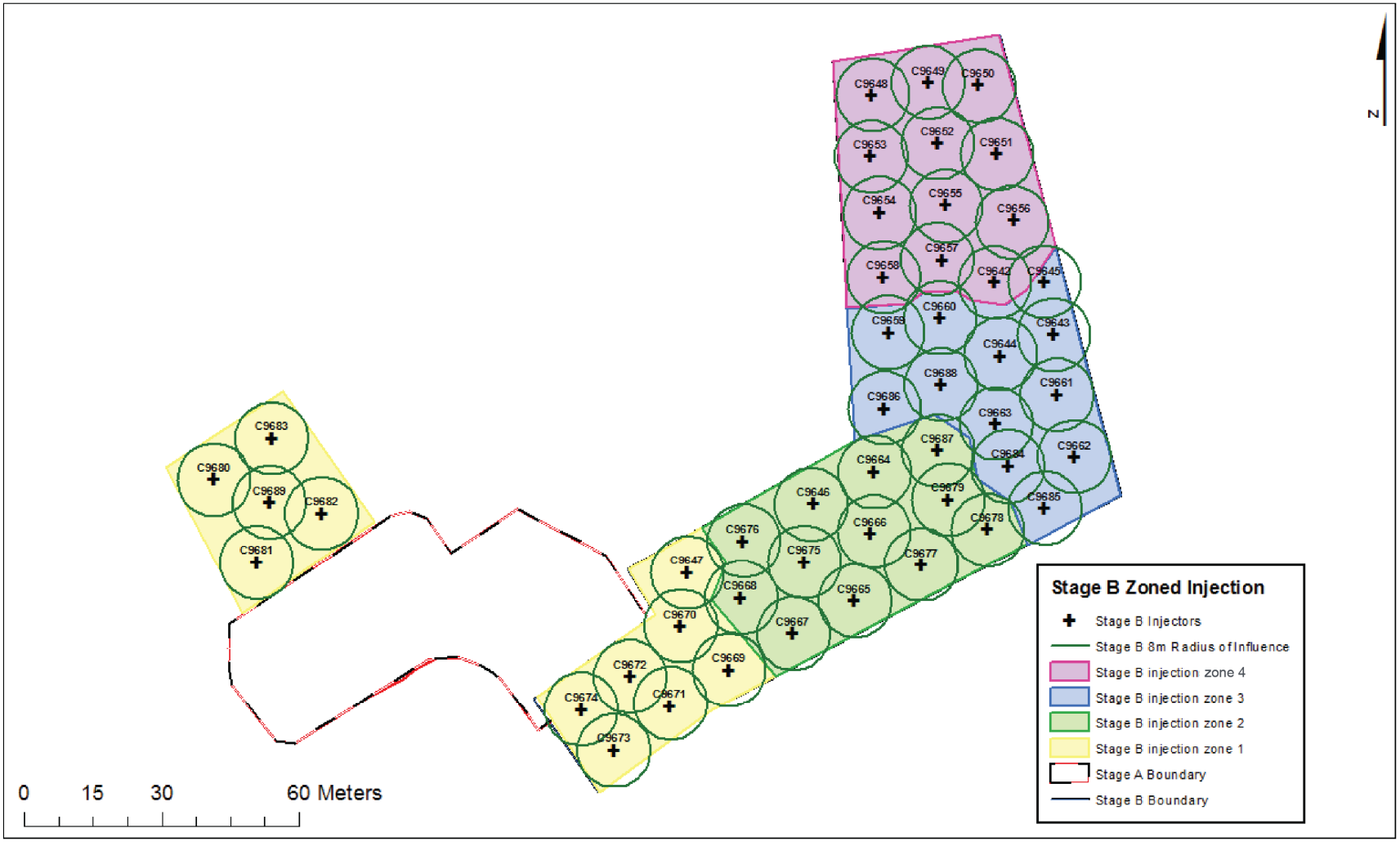

Figure 2-1. Injection Wells and Injection Zones in the Stage B Treatment Area

Figure 2-2. Terra Sonic™ Drill Rig in the 300 Area

Figure 2-3. Collecting Soil Samples

Drilling activities for all injection and monitoring wells and decommissioning activities for the pre-existing wells were evaluated and designated as low radiological hazard with specific controls based on the site histories, sampling of nearby waste sites, and existing wells. Continuous radiological control support under a radiological work permit (RWP) was implemented during drilling activities. Industrial hygiene (IH) monitoring for volatile organic compounds, lower explosive limit (LEL), sulfur dioxide, and ammonia (NH_3) was conducted twice daily (AM/PM) during drilling activities. Figure 2-4 shows drill cuttings being screened.

Figure 2-4. Monitoring Drill Cuttings

Continuous soil samples were collected in 19 preselected injection boreholes from approximately 3.1 m (20 ft) bgs to 10 m (33 ft) bgs (SGW-60287). Continuous soil samples also were collected in one preselected monitoring well (Section 2.2.). Continuous samples were collected in plastic sleeves from the core barrel. The boreholes were then completed to the final depth. The samples were characterized in accordance with DOE/RL-2014-42-ADD1. Table 2-1 shows the injection borehole identification (ID)/well names with continuous soil sampling. During drilling, opportunistic soil grab samples were collected at the direction of project scientists to capture fugitive data. Table 2-2 shows the 14 injection borehole ID/well names with opportunistic soil sampling, sample depths, and reasoning for collection of samples. Opportunistic soil samples also were collected at three monitoring wells (Section 2.2).

Opportunistic groundwater samples were collected at four injection wells: C9662/399-1-118, C9649/399-1-105, C9673/39-1-129, and C9683/399-1-139. Groundwater samples also were collected at two monitoring wells (Section 2.2).

Table 2-1. Injection Boreholes with Continuous Soil Sampling

Borehole ID/Well Name				
C9642/399-1-98	C9649/399-1-105	C9662/399-1-118	C9673/399-1-129	C9682/399-1-138
C9643/399-1-99	C9651/399-1-107	C9663/399-1-119	C9677/399-1-133	C9683/399-1-139
C9646/399-1-102	C9653/399-1-109	C9667/399-1-123	C9679/399-1-135	C9686/399-1-142
C9647/399-1-103	C9655/399-1-111	C9672/399-1-128	C9681/399-1-137	

ID = identification

Table 2-2. Injection Boreholes with Opportunistic Soil Sampling

Borehole ID/Well Name	Depth (m/ft)	Reasoning
C9650/399-1-106	5.8/19.0	Rip-up clast
C9651/399-1-107	5.8/19.0	Stratigraphic change
C9653/399-1-109	5.8/19.0	Rip-up clast
C9656/399-1-112	5.0-5.3/16.5-17.5	--
	6.4/21.0	Rip-up clasts
C9657/399-1-113	5.5/18.0	Contamination at borehole
C9658/399-1-114	5.6/18.5	Contamination at borehole
C9659/399-1-115	3.9/13	Black sediments
	4.2/14	Contamination at borehole
	6.1/20	Rip-up clast
C9660/399-1-116	5.8-6.1/19.0-20.0	Rip-up clast
	12.6-13.5/41.5-44.5	Orange-rust color wood present
C9661/399-1-117	6.1-6.5/20.0-21.5	Rip-up clast
C9662/399-1-118	5.5-5.8/18.0-19.0	Rip-up clast
C9664/399-1-120	5.5-5.8/18.0-19.0	Contamination at borehole
C9670/399-1-126	8.4/27.5	Rip-up clasts
	9.1/30.0	
	10.6/35.0	
	12.1/40.0	
C9680/399-1-136	4.8-6.1/16.0-20.0	Contamination at borehole
C9685/399-1-141	6.7-7.0/22.0-23.0	Rip-up clasts

ID = identification

Geophysical logging was performed on selected boreholes to produce a geophysical log of the entire length of the borehole. Geophysical logging included neutron moisture logging and high-resolution, spectral gamma ray to support determination of the depth of the upper unconfined aquifer, provide information supporting well completion, and screen for gamma-emitting radionuclides. One injection well, C9683/399-1-139, was geophysically logged and eight monitoring wells were geophysically logged, Section 2.2. Figure 2-5 shows the geophysical logging equipment at one of the wells.

Table 2-3 and Figure 2-6 presents the construction specifications for the 36 injection wells without ERT electrodes. Table 2-4 and Figure 2-7 presents the construction specifications for the 12 injection wells fitted with ERT electrodes. All injection wells were constructed using 15 cm (6 in.) diameter Schedule 80 polyvinyl chloride (PVC) flush joint pipe for the sumps and risers. Each well has two 50-slot screened intervals: one in the lower portion of the vadose zone, and the other in the PRZ, with 1.5 m (5.0 ft) of blank casing in between.

Figure 2-5. Geophysical Logging

Table 2-3. Construction Specifications for Typical Injection Well without ERT Electrodes

Construction Parameter	Specification
Estimated depth to water, low river stage (bgs)	10.2 m (33 ft)
Drill depth (bgs)	10.8 m (35 ft)
Screen and casing diameter	15 cm (6. in)
Concrete well pad interval	0.15 m (0.5 ft)
Cement grout surface seal interval	2.9 m (9.5 ft)*
Bentonite pellet seal interval	0.9 m (3 ft)*
PRZ filter pack interval	2.9 m (9.5 ft)
Upper screen length	1.5 m (5. ft)
Bentonite pellet seal interval	0.6 m (2 ft)
Blank casing length	1.5 m (5 ft)
Aquifer filter pack interval	3.2 m (9.5 ft)*
Lower screen length	1.5 m (5 ft)
Sump length	0.9 m (3 ft)

Reference: SGW-60287, *Description of Work for the Installation of Forty Eight Injection Wells and Nineteen Monitoring Wells in the 300-FF-5 Groundwater Operable Unit, FY17*.

*Interval may vary, depending on site conditions.

bgs = below ground surface

ERT = electrical resistivity tomography

PRZ = periodically rewetted zone

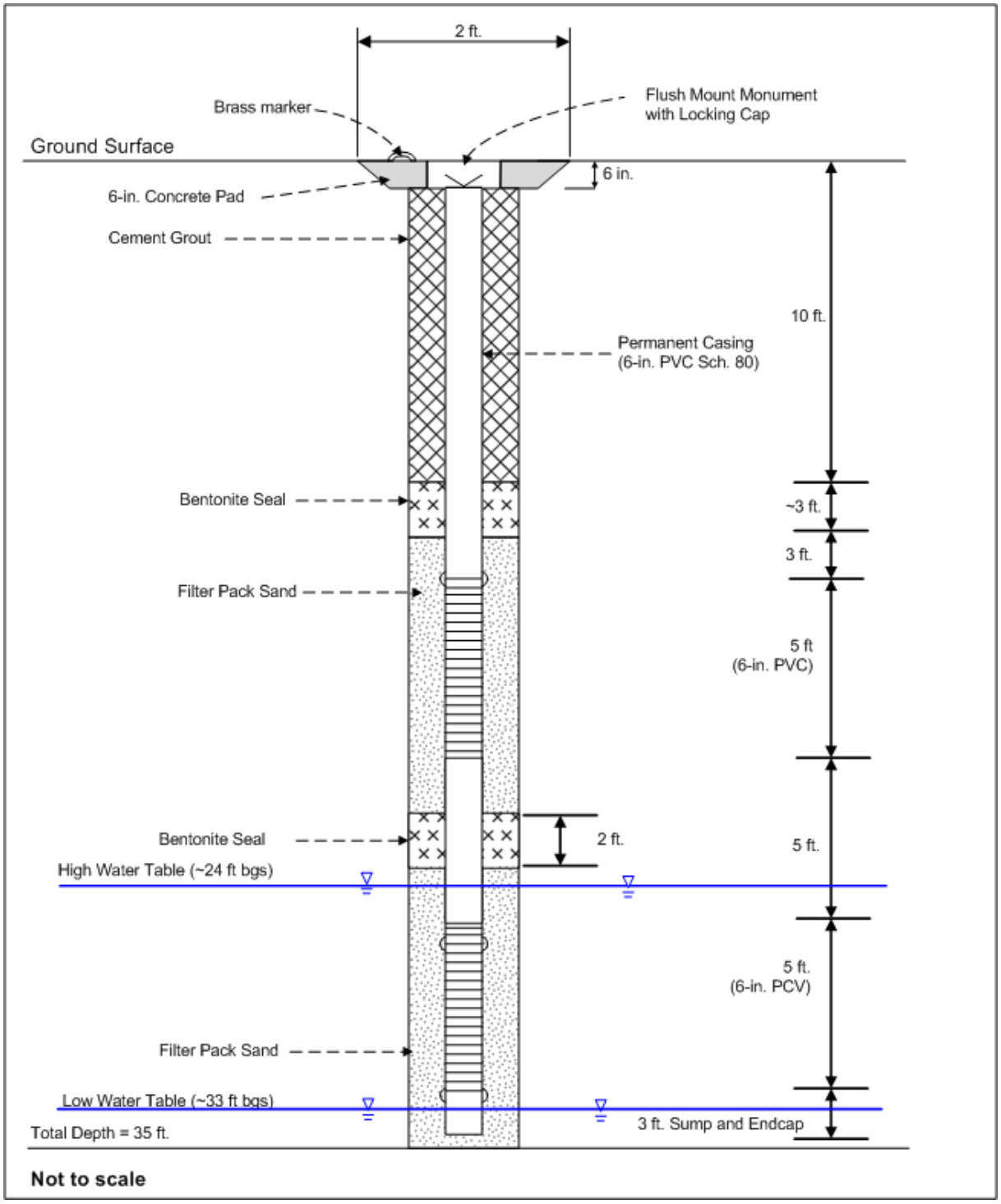

Figure 2-6. Injection Well Construction Detail without ERT Electrodes

Table 2-4. Construction Specifications for Typical Injection Well with ERT Electrodes

Construction Parameter	Specification
Estimated depth to water, low river stage (bgs)	10.2 m (33 ft)
Drill depth (bgs)	13.6 m (44.2 ft)
Screen and casing diameter	15 cm (6 in.)
Concrete well pad interval	0.3 m (1 ft)
Cement grout surface seal interval	3.8 m (12.5 ft)*
Upper filter pack interval	2.9 m (9.5 ft)
Upper screen length	1.5 m (5 ft)
Cement grout seal interval	0.6 m (2 ft)
Blank casing length	2.5 m (5 ft)
Lower filter pack interval	2.9 m (10.5 ft)*
Lower screen length	1.5 m (5 ft)
Blank casing length	2.5 m (8 ft)
Sump length	0.9 m (3 ft)
Bottom filter pack interval	3.0 m (10.8 ft)

Reference: SGW-60287, *Description of Work for the Installation of Forty Eight Injection Wells and Nineteen Monitoring Wells in the 300-FF-5 Groundwater Operable Unit, FY17.*

*Interval may vary, depending on site conditions.

bgs = below ground surface

ERT = electrical resistivity tomography

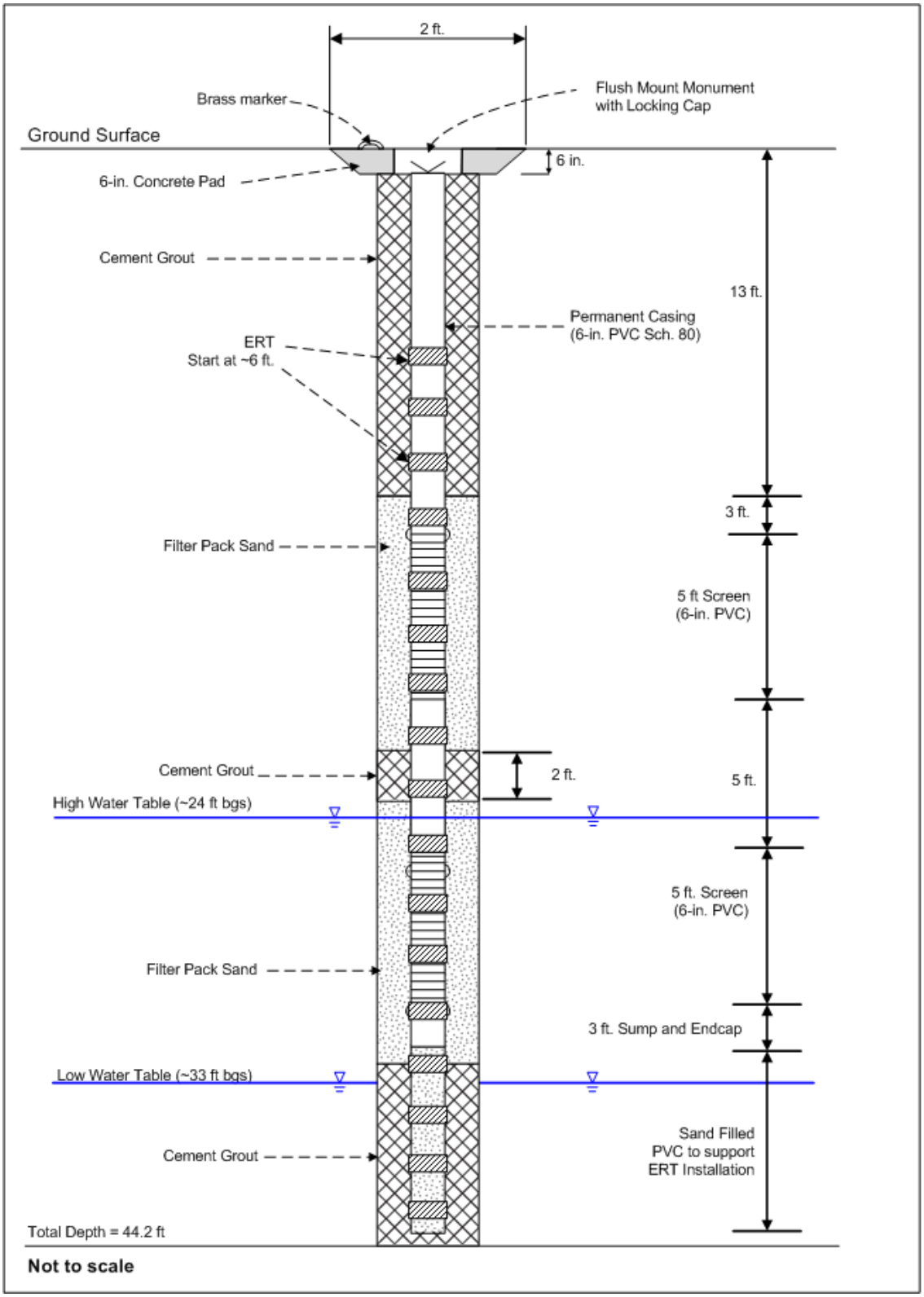

Figure 2-7. Injection Well Construction Detail with ERT Electrodes

The annular fill for injection wells not fitted with ERT electrodes consists of clean, rounded Colorado silica sand placed from total depth to about 0.46 m (1.5 ft) above the top of the lower screen. Bentonite (approximately 0.6 m [2 ft] thick) was placed between the screened intervals, coincident with the blank section of casing in between screens to prevent communication between injection intervals. Then clean, rounded Colorado silica sand was placed from the top of the bentonite seal (0.46 m [1.5 ft] below the upper screen) extending to no less than 0.9 m (3 ft) above the top of the upper screen. Then pelletized bentonite, no less than 0.9 m (3 ft) thick, was placed atop the sand pack followed by a neat cement grout surface seal, approximately 3 m (10 ft) thick, that was placed to approximately 0.2 m (0.5 ft) bgs.

The annular fill for injection wells fitted with ERT electrodes consists of clean, rounded Colorado silica sand from total depth to approximately 0.61 m (2 ft) above the top of the lower screen. The injection wells and monitoring wells fitted with ERT equipment did not use bentonite for sealing. A variance was procured to use a nonbentonite grout seal to prevent interference with the ERT measurements (Appendix G of SGW-61092). Bentonite grout has a high electrical conductivity that interferes with ERT measurements; instead, a low-conductivity low-permeability grout (preferably lower conductivity than the formation) was used for the ERT system design. The wells were sealed with a high-strength, low-permeability, and low-conductivity cement, approximately 0.3 m (1 ft) thick, placed between the screened intervals, coincident with the blank section of casing in between screens to prevent communication between injection intervals. The grout mixture was 32% type 1 Portland cement and 68% DS-325 Hess Pozzolan (Pumice) at a 0.5 water to cement ratio. Pacific Northwest National Laboratory (PNNL) tested the mixture to ensure optimal ERT system measurements. Clean rounded Colorado silica sand was placed from the top of the grout seal (0.45 m [1.5 ft] below the upper screen) extending to no less than 0.9 m (3 ft) above the top of the upper screen, and pumice grout surface seal approximately 3.5 m (11.5 ft) thick was placed to approximately 0.15 m (0.5 ft) bgs.

The surface completions of the injection wells consist of dual opposing steel plates 1.3 cm (0.5 in.) thick, which serve as landing plates to support the injection pipes, connection ports, and packers. The well packer is 1.2 m (4 ft) long and positioned in the well with top of packer at 6.4 m (21 ft) bgs to coincide with the top of the blank section of casing between the two screened intervals. The PRZ injection pipe passes through the packer with the pipe outlet at approximately 8.2 m (27 ft) bgs. The lower vadose zone injection pipe outlet is approximately 0.9 m (3 ft) bgs and empties on top of the packer. The packer is inflated with a 0.6 cm (0.25 in.) diameter airline extending to an air compressor. The injection pipes rest on the landing plate supported by pipe coupling that extends the pipe to a tee where a 15.2 cm (6 in.) pipe nipple is connected to a 5 cm (2 in.) female camlock fitting. A camlock assembly with a pressure indicator gauge is connected to injection pipe to measure the pressure within injection well. A 5 cm (2 in.) male camlock is connected to a 7.6 cm (3 in.) double-jacket fire hose chemical supply line extending from the chemical mixing skids.

Well heads were capped using a 0.3 by 0.3 m (1 by 1 ft) weatherproof flush-mounted well vault placed in a 0.6 by 0.6 m (2 by 2 ft) concrete pad set approximately 2.5 cm (1 in.) above ground surface. The well name, well identification number, and finish date were embossed on a bronze marker placed in the concrete pad on the north side of the well. Washington State Department of Ecology unique well identification tags were installed on the well casing inside the well vault.

Final well development was conducted by over pumping to obtain maximum flow rates. The upper screens of injection wells were not developed because the upper screens are located above the seasonal low water mark and were dry. Drawdown and recovery tests were monitored using a level TROLL® 700 pressure transducer/data logger. Well development information can be found in Table 2-5.

®TROLL is a registered trademark of In-Situ Inc., Fort Collins, Colorado.

Table 2-5. Injection Well Development Summary

Borehole ID/Well Name	Date Developed	Initial Water Level (m/ft bgs)	Duration Pumped (min)	Total Volume Pumped (L/gal)
C9642/399-1-98	5/1/2017	8.10/26.8	51	483.8/128.0
C9643/399-1-99	5/1/2017	8.00/26.5	57	495.1/131.0
C9644/399-1-100	5/2/2017	8.10/26.9	65	567/150
C9645/399-1-101	5/1/2017	8.00/26.6	52	491.4/130.0
C9646/399-1-102	5/30/2017	7.30/24.2	41	389.3/103.0
C9647/399-1-103	5/31/2017	7.4/24.5	32	302.4/80
C9648/399-1-104	4/25/2017	8.2/27.2	42	396.9/105
C9649/399-1-105	4/25/2017	8.1/27	43	408.2/108
C9650/399-1-106	4/25/2017	8.2/27.1	43	438.4/116
C9651/399-1-107	4/26/2017	8.0/26.7	56	529.2/140
C9652/399-1-108	4/26/2017	8.1/26.8	38	359.1/95
C9653/399-1-109	4/25/2017	8.2/27.3	38	359.1/95
C9654/399-1-110	4/26/2017	8.1/26.8	48	453.6/120
C9655/399-1-111	4/26/2017	8.1/26.9	45	427.1/113
C9656/399-1-112	4/26/2017	8.0/26.7	28	264.6/70
C9657/399-1-113	4/26/2017	8.1/26.8	45	427.1/113
C9658/399-1-114	4/26/2017	13./44.6	53	502.7/133
C9659/399-1-115	5/1/2017	8.2/27.1	51	442.2/117
C9660/399-1-116	5/1/2017	8.1/27	52	491.4/130
C9661/399-1-117	5/3/2017	8.3/27.5	44	381.7/101
C9662/399-1-118	5/3/2017	8.2/27.3	53	461.1/122
C9663/399-1-119	5/2/2017	8.3/27.4	24	389.3/103
C9664/399-1-120	5/31/2017	7.4/24.5	24	226.8/60
C9665/399-1-121	5/30/2017	7.5/24.8	27	257.0/68
C9666/399-1-122	5/30/2017	7.4/24.6	25	238.1/63
C9667/399-1-123	5/30/2017	7.2/24	27	257.0/68
C9668/399-1-124	5/31/2017	7.4/24.6	32	302.4/80
C9669/399-1-125	5/31/2017	7.4/24.7	19	181.4/48

Table 2-5. Injection Well Development Summary

Borehole ID/Well Name	Date Developed	Initial Water Level (m/ft bgs)	Duration Pumped (min)	Total Volume Pumped (L/gal)
C9670/399-1-126	5/31/2017	7.3/24.4	20	189/50
C9671/399-1-127	5/31/2017	7.5/25	21	196.5/52
C9672/399-1-128	5/31/2017	7.5/24.9	14	132.3/35
C9673/399-1-129	5/31/2017	7.6/25.2	24	226.8/60
C9674/399-1-130	5/31/2017	7.4/24.7	17	162.5/43
C9675/399-1-131	5/30/2017	7.3/24.4	18	170.1/45
C9676/399-1-132	5/31/2017	7.4/24.5	19	181.4/48
C9677/399-1-133	5/30/2017	7.4/24.6	25	238.1/63
C9678/399-1-134	5/30/2017	7.4/24.5	23	219.2/58
C9679/399-1-135	5/30/2017	7.4/24.5	25	238.1/63
C9680/399-1-136	5/31/2017	7.3/24.4	21	200.3/53
C9681/399-1-137	6/1/2017	7.3/24.3	23	219.2/58
C9682/399-1-138	6/1/2017	7.3/24.2	41	389.3/103
C9683/399-1-139	5/31/2017	7.1/23.7	20	189/50
C9684/399-1-140	5/3/2017	8.3/27.7	39	340.2/90
C9685/399-1-141	5/3/2017	8.3/27.6	34	294.8/78
C9686/399-1-142	5/2/2017	8.2/27.2	106	1001.0/265
C9687/399-1-143	5/2/2017	8.3/27.5	50	434.7/115
C9688/399-1-144	5/2/2017	8.1/27	75	653.9/173
C9689/399-1-145	6/1/2017	7.3/24.3	22	207.9/55

Reference: SGW-61092, *Borehole Summary Report for the Installation of Forty Eight Injection wells and Nineteen Monitoring Wells at the 300-FF-5 Operable Unit, FY 2017.*

bgs = below ground surface

ID = identification

Table 2-6 provides a summary of the injection wells installed for the Stage B uranium sequestration system. The table includes the well ID/borehole number, construction date, surveyed coordinates, total depth, screened interval in the lower vadose zone, and screened interval in the PRZ for each well. Grout seal, bentonite seals, and sand filter pack were installed in accordance with the specifications in Tables 2-3 and 2-4. Additional information on construction and completion of the wells is contained in SGW-61092.

Table 2-6. Stage B Injection Wells

Borehole ID/ Well Name	Construction Date	Coordinates (NAD83 State Plane)		Total Depth (m/ft) bgs	Vadose Zone Screened Interval (m/ft) bgs		PRZ Screened Interval (m/ft) bgs		ERT Well
		Northing (m)	Easting (m)		Top	Bottom	Top	Bottom	
C9642/399-1-98	3/7/2017	116547.75	594247.39	10.6/35.2	4.8/16.06	6.3/21.05	7.8/26.04	9.4/31.04	--
C9643/399-1-99	3/28/2017	116536.22	594260.30	10.6/35.3	4.8/15.96	6.3/20.96	7.8/25.96	9.3/30.96	--
C9644/399-1-100	3/27/2017	116531.61	594248.84	10.6/35.1	4.8/15.97	6.3/20.97	7.8/25.97	9.3/30.97	--
C9645/399-1-101	3/8/2017	116547.69	594258.35	10.6/35.1	4.9/16.25	6.4/21.25	7.9/26.24	9.4/31.24	--
C9646/399-1-102	4/24/2017	116499.21	594207.57	10.6/35	5.0/16.59	6.5/21.57	8.0/26.55	9.5/31.53	--
C9647/399-1-103	5/31/2017	116484.13	594180.09	13.7/45.5	4.7/15.78	6.2/20.76	7.7/25.73	9.3/30.71	Yes
C9648/399-1-104	2/6/2017	116588.94	594220.71	10.7/35.4	4.7/15.74	6.2/20.73	7.7/25.72	9.3/30.71	--
C9649/399-1-105	2/7/2017	116591.73	594232.97	10.7/35.4	4.8/16.01	6.3/21	7.8/26	9.3/31	--
C9650/399-1-106	2/8/2017	116591.27	594243.83	10.6/35	4.8/15.98	6.3/20.98	7.8/25.98	9.3/30.98	--
C9651/399-1-107	2/22/2017	116575.95	594247.99	10.6/35	4.8/15.97	6.3/20.93	7.8/25.93	9.3/30.93	--
C9652/399-1-108	2/17/2017	116578.29	594234.98	10.6/35.3	4.8/15.84	6.3/20.83	7.8/25.83	9.3/30.82	--
C9653/399-1-109	2/15/2017	116575.47	594220.42	10.6/35	4.7/15.68	6.2/20.67	7.7/25.66	9.2/30.65	--
C9654/399-1-110	3/1/2017	116563.10	594222.25	10.7/35.4	4.8/16.01	6.3/21.01	7.8/26.01	9.3/31	--
C9655/399-1-111	2/23/2017	116564.75	594236.83	10.6/35	4.8/15.95	6.3/20.95	7.8/25.95	9.3/30.95	--
C9656/399-1-112	3/2/2017	116561.45	594251.76	10.6/35.2	4.8/16.06	6.3/21.05	7.8/26.05	9.4/31.05	--
C9657/399-1-113	3/20/2017	116552.72	594236.09	13.8/45.7	4.7/15.77	6.2/20.77	7.8/25.77	9.3/30.77	Yes
C9658/399-1-114	3/16/2017	116548.72	594223.06	13.4/44.5	4.8/16.04	6.3/21.04	7.8/26.03	9.4/31.03	Yes
C9659/399-1-115	3/22/2017	116536.63	594224.23	13.6/45	4.8/15.97	6.3/20.97	7.8/25.97	9.3/30.97	Yes
C9660/399-1-116	3/23/2017	116539.77	594235.61	13.4/44.5	4.8/15.9	6.3/20.9	7.8/25.9	9.3/30.9	Yes

Table 2-6. Stage B Injection Wells

Borehole ID/ Well Name	Construction Date	Coordinates (NAD83 State Plane)		Total Depth (m/ft) bgs	Vadose Zone Screened Interval (m/ft) bgs		PRZ Screened Interval (m/ft) bgs		ERT Well
		Northing (m)	Easting (m)		Top	Bottom	Top	Bottom	
C9661/399-1-117	3/30/2017	116523.12	594261.17	10.4/34.5	4.8/15.96	6.3/20.96	7.8/25.96	9.3/30.96	--
C9662/399-1-118	3/30/2017	116509.49	594265.06	10.6/35.3	4.8/15.98	6.3/20.98	7.8/25.98	9.3/30.98	--
C9663/399-1-119	4/6/2017	116516.74	594247.68	10.6/35.1	4.8/15.96	6.3/20.96	7.8/25.95	9.3/30.95	--
C9664/399-1-120	4/24/2017	116506.25	594221.00	10.6/35	5.1/16.86	6.6/21.83	8.1/26.81	9.6/31.78	--
C9665/399-1-121	4/17/2017	116477.76	594216.60	10.4/34.4	4.8/15.98	6.3/20.95	7.8/25.93	9.3/30.89	--
C9666/399-1-122	4/19/2017	116492.61	594220.37	10.3/34.2	4.9/16.39	6.4/21.36	7.9/26.34	9.4/31.31	--
C9667/399-1-123	4/13/2017	116470.97	594203.53	10.5/34.9	4.8/16	6.3/20.97	7.8/25.95	9.3/30.92	--
C9668/399-1-124	5/2/2017	116478.38	594191.78	13.7/45.4	4.9/16.25	6.4/21.22	7.9/26.19	9.4/31.16	Yes
C9669/399-1-125	4/5/2017	116462.68	594189.31	10.4/34.6	4.9/16.19	6.4/21.16	7.9/26.13	9.4/31.1	--
C9670/399-1-126	4/18/2017	116472.30	594178.65	13.8/45.7	4.9/16.44	6.4/21.41	7.9/26.38	9.5/31.35	Yes
C9671/399-1-127	4/3/2017	116454.87	594176.32	13.3/44.1	4.8/16.08	6.3/21.06	7.8/26.03	9.3/31	--
C9672/399-1-128	4/4/2017	116461.04	594167.64	10.4/34.6	4.8/15.93	6.3/20.9	7.8/25.87	9.3/30.84	--
C9673/399-1-129	3/22/2017	116445.21	594163.93	10.4/34.5	4.7/15.64	6.2/20.62	7.7/25.58	9.2/30.55	--
C9674/399-1-130	3/21/2017	116454.09	594156.99	10.7/35.4	4.9/16.32	6.4/21.29	7.9/26.26	9.4/31.22	--
C9675/399-1-131	4/11/2017	116486.39	594205.66	10.4/34.4	4.8/16	6.3/20.97	7.8/25.95	9.3/30.92	--
C9676/399-1-132	5/23/2017	116490.94	594192.26	13.8/45.8	4.9/16.22	6.4/21.2	7.9/26.18	9.4/31.15	Yes
C9677/399-1-133	4/18/2017	116485.77	594231.37	10.9/36	4.8/16	6.3/20.97	7.8/25.94	9.3/30.91	--
C9678/399-1-134	4/12/2017	116493.68	594245.94	13.6/45	4.8/15.89	6.3/20.86	7.8/25.84	9.3/30.81	Yes
C9679/399-1-135	4/13/2017	116500.00	594237.24	13.6/45.1	4.8/15.85	6.3/20.82	7.8/25.79	9.3/30.76	Yes

Table 2-6. Stage B Injection Wells

Borehole ID/ Well Name	Construction Date	Coordinates (NAD83 State Plane)		Total Depth (m/ft) bgs	Vadose Zone Screened Interval (m/ft) bgs		PRZ Screened Interval (m/ft) bgs		ERT Well
		Northing (m)	Easting (m)		Top	Bottom	Top	Bottom	
C9680/399-1-136	5/9/2017	116504.34	594076.51	10.4/34.4	4.7/15.8	6.2/20.78	7.8/25.76	9.3/30.74	--
C9681/399-1-137	5/16/2017	116486.36	594085.92	10.2/33.8	4.8/15.95	6.3/20.92	7.8/25.89	9.3/30.86	--
C9682/399-1-138	5/17/2017	116497.09	594100.13	10.3/34	5.0/16.55	6.5/21.52	8.0/26.5	9.5/31.47	--
C9683/399-1-139	5/16/2017	116513.50	594089.10	10.3/34.3	4.7/15.79	6.2/20.76	7.7/25.73	9.3/30.7	--
C9684/399-1-140	4/7/2017	116507.43	594250.34	13.7/45.5	4.7/15.83	6.3/20.83	7.8/25.83	9.3/30.83	Yes
C9685/399-1-141	4/11/2017	116498.16	594258.47	13.4/44.4	4.8/15.86	6.3/20.86	7.8/25.86	9.3/30.86	Yes
C9686/399-1-142	4/4/2017	116520.04	594223.43	10.6/35.2	4.8/15.95	6.3/20.95	7.8/25.95	9.3/30.95	--
C9687/399-1-143	4/5/2017	116510.90	594235.08	10.6/35.3	4.8/16.07	6.3/21.06	7.8/26.06	9.4/31.06	--
C9688/399-1-144	4/5/2017	116525.43	594235.72	10.6/35.3	4.9/16.17	6.4/21.16	7.9/26.15	9.4/31.14	--
C9689/399-1-145	5/15/2017	116499.45	594088.7	10.3/34.3	4.7/15.59	6.2/20.55	7.7/25.51	9.2/30.46	--

References: NAD83, North America Datum of 1983.

SGW-61092, *Borehole Summary Report for the Installation of Forty Eight Injection wells and Nineteen Monitoring Wells at the 300-FF-5 Operable Unit, FY 2017*.

bgs = below ground surface

ERT = electrical resistivity tomography

ID = identification

PRZ = periodically rewetted zone

2.1.1 Unexpected Conditions

The following sections document unexpected conditions encountered during installation and testing of the injection wells.

2.1.1.1 Issues with Installation of Injection Well C9643/399-1-99

Monday, March 27, 2017 – During drilling operations, the driller had advanced the borehole to approximately 6 m (20 ft) bgs when the IH technician measured volatile organic compound (VOC) readings of 829 ppm. Work was temporarily halted but resumed after subsequent testing indicated decreased VOC readings. No optional grab soil sample was taken. All drilling, construction, and installation activities were concluded in the afternoon.

2.1.1.2 Issues with Installation of Injection Well C9647/399-1-103 with ERT

Wednesday, May 17, 2017 – In the afternoon, the drill crew/rig set up on borehole C9647. During continuous monitoring, the radiological control technician (RCT) recorded readings of 4,000 dpm at 2.3 m (7.5 ft) bgs and 6,000 dpm at 4.5 m (15 ft) bgs. The sample from 4.5 to 5.2 m (15 to 17 ft) bgs was double bagged and isolated in a radioactive material area (RMA). All downhole work was concluded for the day at 6.1 m (19.9 ft) bgs.

Thursday, May 18, 2017 – In the morning, the geologist consulted with the project scientist to discuss optional grab samples for the contaminated cores from the day before. No optional sample was collected for the high radiation core samples. Drillers advanced the borehole to 9.1 m (30 ft) bgs and the RCT surveys continued to record high gamma/beta readings from the core samples (3000 to 4000 dpm). Grab samples were not collected from 6 to 9.1 m (20 to 30 ft) bgs due to the radiation contamination. No representative sieve samples were collected from 7.9 to 9.5 m (26 to 31 ft) bgs. Total depth for the borehole was reached in late morning and the drillers began well construction and installation. Drillers installed the first grout seal and concluded construction activities for the day.

2.1.1.3 Issues with Installation of Injection Well C9657/399-1-113 with ERT

Tuesday, March 7, 2017 – In the afternoon, the drill crew/rig set up on borehole C9657. The crew advanced the borehole from 0 to 3 m (0 to 10 ft) bgs. The core barrel hit a boulder (approximately 0.6 m [2ft] in diameter) at 0.6 m (2 ft) bgs. The drill string was successfully advanced through the boulder; however, the boulder acted to kick out the drill string, moving it significantly off-center.

Wednesday, March 8, 2017 – In the morning, the drill crew excavated and removed the boulder, backfilled the hole, and resumed drilling. The borehole had elevated IH readings at 6 m (20 ft) bgs: 500+ ppm VOC and 3 ppm NH_3. The borehole was advanced to 12.9 m (42.5 ft) bgs and the casing was installed with ERT sensors/electrodes and cable attached. The bottom sand pack was installed (no grout).

Thursday, March 9, 2017 – During discussions of the previous day's activities at the morning plan of the day (POD), it was discovered that the uppermost ERT sensor/electrode was positioned at 1.2 m (3.9 ft) bgs, not the required 1.8 m (6 ft) bgs per Section 6.1.9 of SGW-60243. The well casing with ERT was pulled and the boring advanced an additional 0.6 m (2 ft) bgs (total depth 13.7 m [45 ft] bgs). The 15 cm (6 in.) casing was re-installed with the uppermost ERT sensor at 1.8 m (6 ft) bgs per SGW-60243, which specifies that:

> "The ERT system shall be designed and installed to prevent hazard to the workers by ensuring that surface operations may be conducted with potential for hazardous energy exposure from the ERT system remaining below the level that would require hazardous energy controls (i.e., the uppermost ERT probe will be located deeper than 1.8 m [6 ft] below ground surface)."

The sand filter pack was installed up to the level of lowermost pumice grout seal.

In conjunction with the increased total depth requirement to facilitate placing the uppermost electrode/sensor at 1.8 m (6 ft) bgs, the bottom well-centralizer was incorporated as part of the electrode, resulting in a deeper ERT installation.

Monday, March 13, 2017 – The 0.3 m (1 ft) thick pumice grout seal between the upper and lower injection screens was installed and the temporary casing backpulled. The grout needed to set overnight before adding the upper screen filter pack and additional pumice/grout seal.

Tuesday, March 14, 2017 – When starting to backpull the temporary casing for continuing with filter pack installation, the temporary casing became stuck in approximately 5 cm (2 in.) of the pumice/grout seal; consequently, the permanent casing was raised approximately 0.8 m (2.7 ft). The permanent well casing was removed and the boring advanced to 13.7 m (45 ft) bgs. The 15 cm (6 in.) permanent casing was reinstalled with sufficient sand pack to hold the well casing in place.

A camera was lowered into the annulus between the temporary and permanent casing to ensure that the temporary casing would be backpulled completely above the pumice/grout seal while also limiting the amount of open hole.

Thursday, March 16, 2017 – The 20-40 mesh Colorado silica sand was installed to 7 m (23 ft) bgs, and the 0.3 m (1 ft) thick pumice grout seal between the upper and lower injection screens was installed. The temporary casing was backpulled to 6.4 m (21 ft) bgs, and a camera lowered into the annular space to confirm that the temporary casing was above the grout seal.

2.1.1.4 Issue with Installation of Injection Well C9659/399-1-115 with ERT

Tuesday, March 21, 2017 – In the morning, the drill crew/rig set up on borehole C9659. Drillers advanced the borehole to approximately 1.5 m (5 ft) bgs and encountered a boulder that caused the drill string to kick out. Drilling was successful, and a basalt core was retrieved from the borehole that was advanced 3.9 m (13 ft) bgs. During a cleanout run, the IH technician recorded VOCs at 669 ppm. Work was temporarily stopped to assess conditions in the breathing zone near the borehole. The lithology at 3.9 m (13 ft) bgs was the suspected source of contamination, and the project scientist directed the field geologist to grab supplemental soil samples at 3.9 m, 4.3 m, and 6.1 m (13 ft, 14 ft, 20 ft) bgs to ensure capture of the contaminated zone. After the IH technician confirmed that there were no VOCs in the breathing zone, drilling was resumed and concluded in the afternoon, after which well construction commenced.

2.1.1.5 Issues with Installation of Injection Well C9660/399-1-116 with ERT

Wednesday, March 22, 2017 – During construction of well C9660/399-1-116, drillers had difficulty setting the permanent casing at the bottom of the borehole without risking damage to the well and electrode assembly. These construction issues caused the permanent casing to protrude above the ground surface by 0.04 m (0.13 ft). During installation of the filter pack and annular seal from 7.7 m (25.4 ft) bgs to 6.9 m (22.9 ft) bgs, the geologist noted that the annulus was taking in sand and grout very quickly. A borehole camera survey confirmed that there was an open cavity in the Hanford gravels from 6.9 to 6.7 m (22.93 ft to 22.1 ft) bgs.

2.1.1.6 Issues with Installation of Injection Well C9664/399-1-120

Thursday, April 20, 2017 – In the morning, the drill crew/rig set up on borehole C9664. Drillers advanced the borehole to approximately 6.1 m (20 ft) bgs where the RCT recorded readings of 9000 dpm from drilling samples. No grab samples were collected at this interval, and the RCT ordered the plastic sleeve to remain sealed. This interval was not included in the sieve analysis for the borehole. Total depth was reached, and drilling activities concluded.

2.1.1.7 Issues with Installation of Injection Well C9666/399-1-122

Wednesday, April 19, 2017 – In the morning, the drill crew/rig set up on borehole C9666. Drillers advanced the borehole to approximately 6.1 m (20 ft) bgs. At this depth, the IH technician detected VOCs at 158.7 ppm and 11% LEL at the core barrel. A temporary stop work was called to allow the core barrel to cool. Drilling was resumed after the VOC and LEL concentrations decreased, and the borehole reached total depth at 10.4 m (34.2 ft) bgs. During installation of the permanent casing, stick up was measured at 0.36 m (1.2 ft) above ground surface. Next, the permanent casing was removed. The project scientist authorized drillers to flush the hole with approximately 378 L (100 gal) of water to move the silty soil away from the bottom of the borehole. After flushing with water, the borehole was tagged at a depth of 10.5 m (34.5 ft) bgs. The permanent casing was re-installed flush with ground surface. Construction and installation activities concluded in the afternoon.

2.1.1.8 Issues with Installation of Injection Well C9668/399-1-124 with ERT

Monday, May 1, 2017 – In the morning, the drill crew/rig set up on borehole C9668. Drillers advanced the borehole to approximately 6.1 m (20 ft) bgs in the afternoon. During recovery and clean out of the borehole at 3 to 6 m (10 to 20 ft) bgs, the RCT detected 7500 dpm of radiation contamination in the clean out run. Drilling activities were immediately concluded.

Tuesday, May 2, 2017 – In the morning, the RCT conducted a smear test on the sample liner from 7 m (23 ft) bgs. The smear test results indicated 50 dpm of alpha contamination. Gamma/beta readings indicated 6000 dpm at this depth for the liner as well. Grab samples were collected at 4 to 5 m (13 to 17 ft) bgs but could only be visually described for the borehole log records due to gamma/beta contamination. No grab sample was collected at 7 m (23 ft) bgs, but the sediments were visually described for the borehole log. Total depth for the borehole reached 13.8 m (45.4 ft) bgs.

2.1.1.9 Issues with Installation of Injection Well C9673/399-1-129

Wednesday, March 22, 2017 – In the morning, the drill crew/rig set up on borehole C9673 and advanced to 10.5 m (34.5 ft) bgs. During collection of continuous core samples, the RCT recorded 6300 dpm radiation contamination at approximately 9.4 m (31 ft) bgs. No archive samples were collected after 9.1 m (30 ft) bgs due to contamination. Drillers concluded drilling, construction, and installation activities in the afternoon.

2.1.1.10 Issues with Installation of Injection Well C9676/399-1-132 with ERT

Monday, May 22, 2017 – In the morning, the drill crew/rig set up on borehole C9676 and advanced to approximately 6.1 m (20 ft) bgs. During drilling, the RCT recorded 3000 to 7000 dpm on sediments from 4.3 to 6.1 m (14 to 20 ft) bgs. Samples from 4.5 to 5.2 m (15 to 17 ft) bgs had the highest radiation contamination readings and were tagged and sent to an RMA. Due to radiation contamination, no archive samples were collected from 4.9 to 6.4 m (16 to 21 ft) bgs. The IH technician found contamination near the core barrel at 6.1 m (20 ft) and 9.1 m (30 ft) bgs. Drillers reached total depth in the afternoon and started construction and installation activities.

2.1.1.11 Issues with Installation of Injection Well C9680/399-1-136

Monday, May 8, 2017 – In the morning, the drill crew/rig set up on borehole C9680 and advanced to 6.1 m (20 ft) bgs. At approximately 4.8 to 6.1 m (16 to 20 ft) bgs, the RCT detected beta/gamma contamination of 10,000 dpm. Samples retrieved from 6.1 to 9.1 m (20 to 30 ft) bgs had beta/gamma contamination of 2000 dpm. The contamination was non-transferrable, and the samples were taken to an RMA. No grab samples were collected from 4.8 to 9.1 m (16 to 30 ft) bgs due to contamination. Total depth for the borehole was reached in the afternoon.

2.2 Monitoring Wells

The following describes drilling and construction of PRZ and aquifer monitoring wells within the Stage B EA area. The wells were installed in accordance with SGW-60287.

There are 24 monitoring wells consisting of nine collocated well pairs (including one existing well pair from Stage A) and six downgradient wells that make up the monitoring system for the Stage B EA area. For each well pair, one well is screened in the PRZ and one well is screened in the aquifer to enable monitoring of each discrete zone. The six downgradient wells are composed of three existing wells and three new wells screened in the aquifer. Figure 2-8 shows the locations of the 24 monitoring wells and 6 downgradient wells.

The PRZ and aquifer monitoring wells were drilled using a Terra Sonic™ 150 cc sonic drill rig. The 19 new monitoring wells were drilled between January 24 and May 25, 2017. A summary of the drilling and well construction details is contained in SGW-61092. The boreholes were drilled to allow construction of 10 cm (4 in.) diameter monitoring wells.

Eight PRZ monitoring wells were drilled and completed between February 13 and May 25, 2017. All of the PRZ boreholes were drilled from ground surface to approximately 11.1 m (36 ft) bgs. Eight aquifer monitoring wells were drilled and completed between February 8 and May 25, 2017. The aquifer boreholes were drilled from ground surface to approximately 13.6 m (44.2 ft) bgs. Three downgradient monitoring wells were drilled and completed between January 24 and March 13, 2017. The downgradient boreholes were drilled from ground surface to approximately 13.6 m (44.2 ft) bgs. For each borehole, geologic archive samples were collected at 1.5 m (5 ft) intervals, and at changes in lithology, and were placed in pint jars and chip trays. Archive samples were not collected at depths where high radiological contamination was present or where drill cuttings were interpreted as backfill.

Drilling activities were evaluated and designated as low radiological hazard with specific controls based on the site histories, sampling of nearby waste sites, and existing wells. Continuous radiological control support under an RWP was implemented during drilling activities. IH monitoring for VOCs, LEL, sulfur dioxide, and NH_3 was conducted twice daily (in the morning and the afternoon) during drilling activities.

Geophysical logging was performed along the entire length of eight boreholes. Geophysical logging included neutron moisture logging and high-resolution, spectral gamma ray to support determination of the depth of the upper unconfined aquifer, provide information supporting well completion, and screen for gamma-emitting radionuclides. Table 2-7 lists the borehole IDs and well names of the monitoring boreholes that were geophysically logged.

Continuous soil samples were collected from one pre-selected PRZ borehole C9694 (well 399-1-150) from approximately 3.1 m (20 ft) bgs to 10 m (33 ft) bgs (SGW-60287). The borehole was then completed to the final depth. The samples were characterized in accordance with DOE/RL-2014-42-ADD1. Opportunistic soil samples also were collected at 3 monitoring wells: C9694/399-1-150, C9705/399-1-161, and C9706/399-1-162.

Opportunistic groundwater samples were collected at 2 monitoring wells: C9709/399-1-165 and C9710/399-1-166.

Table 2-8 presents the construction specifications for the 13 monitoring wells without ERT electrodes, and Table 2-9 presents the construction specifications for the six monitoring wells constructed with ERT electrodes. All of the monitoring wells were constructed using 10 cm (4 in.) diameter Schedule 40 PVC pipe with 1.5 m (5 ft) long screens. All monitoring wells have 0.9 m (3 ft) long sumps with threaded end caps.

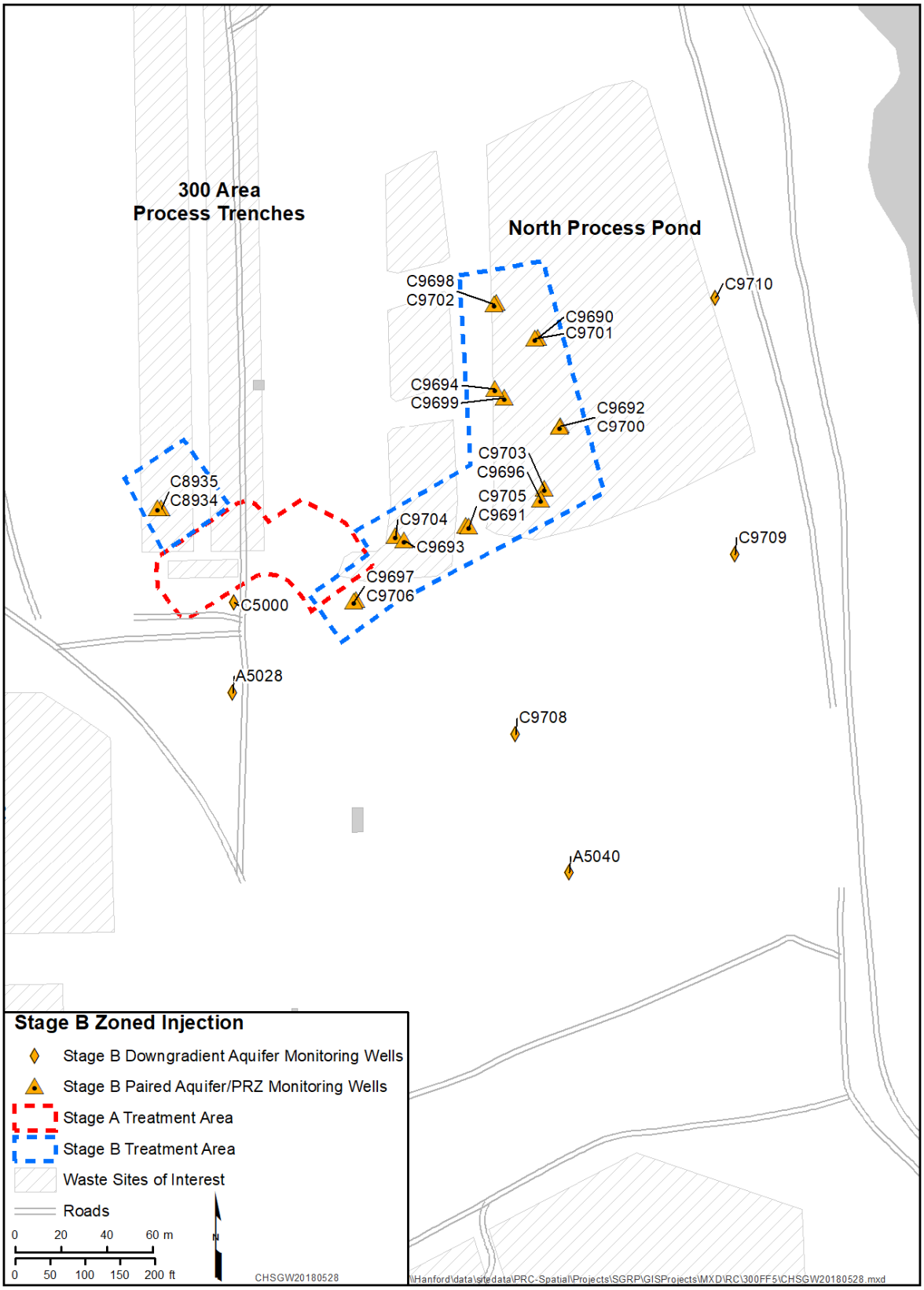

Figure 2-8. Monitoring Wells for the Stage B Uranium Sequestration

Table 2-7. Monitoring Wells Geophysically Logged

Borehole ID/Well Name			
C9694/399-1-150	C9701/399-1-157	C9703/399-1-159	C9705/399-1-161
C9700/399-1-156	C9702/399-1-158	C9704/399-1-160	C9706/399-1-162

ID = identification

Table 2-8. Construction Specifications for Typical Monitoring Wells without ERT Electrodes

Construction Parameter	Specification	
	PRZ Well	Aquifer Well
Estimated depth to low water (bgs)	10.2 m (33 ft)	10.2 m (33 ft)
Estimated drill depth (bgs)	11.1 m (36 ft)	13.6 m (44.2 ft)
Screen and casing diameter	10.2 cm (4 in.)	10.2 cm (4 in.)
Concrete well pad interval	0.2 m (0.5 ft)	0.2 m (0.5 ft)
Cement grout surface seal interval	2.9 m (9.5 ft)	2.9 m (9.5 ft)
Bentonite chips interval	3.9 m (12.8 ft)*	5.8 m (19 ft)*
Bentonite pellet seal interval	0.9 m (3 ft)	0.9 m (3 ft)
Filter pack interval	3.1 m (10.2 ft)*	3.8 m (12.2 ft)*
Screen length	1.5 m (5 ft)	1.5 m (5 ft)
Sump length	0.9 m (3 ft)	0.9 m (3 ft)

Reference: SGW-60287, *Description of Work for the Installation of Forty Eight Injection Wells and Nineteen Monitoring Wells in the 300-FF-5 Groundwater Operable Unit, FY17*.

*Interval may vary, depending on site conditions.

bgs = below ground surface

ERT = electrical resistivity tomography

PRZ = periodically rewetted zone

Table 2-9. Construction Specifications for Typical Monitoring Wells with ERT Electrodes

Construction Parameter	Specification	
	PRZ Well	Aquifer Well
Estimated depth to low water (bgs)	10.2 m (33 ft)	10.2 m (33 ft)
Estimated drill depth (bgs)	13.6 m (44.2 ft)	13.6 m (44.2 ft)
Screen and casing diameter	10.2 cm (4 in.)	10.2 cm (4 in.)
Concrete well pad interval	0.3 m (1 ft)	0.3 m (1 ft)
Cement grout surface seal interval	7.7 m (25 ft)	9.5 m (31 ft)

Table 2-9. Construction Specifications for Typical Monitoring Wells with ERT Electrodes

Construction Parameter	Specification	
	PRZ Well	Aquifer Well
20-40 filter pack interval	0.48 m (1.6 ft)*	0.61 m (2. ft)*
Screen length	1.5 m (5 ft)	1.5 m (5 ft)
Blank riser length	2.5 m (8 ft)	--
Sump length	0.9 m (3 ft)	0.9 m (3 ft)
10-20 filter pack interval	6.1 m (20 ft)	3.9 m (13 ft)

Reference: SGW-60287, *Description of Work for the Installation of Forty Eight Injection Wells and Nineteen Monitoring Wells in the 300-FF-5 Groundwater Operable Unit, FY17.*

*Interval may vary, depending on site conditions.

bgs = below ground surface

ERT = electrical resistivity tomography

PRZ = periodically rewetted zone

The annular fill for PRZ and aquifer monitoring wells not fitted with ERT electrodes consists of clean, rounded Colorado silica sand placed from total depth to approximately 0.9 m (3 ft) above the top of the screen. Bentonite (approximately 0.9 m [3 ft] thick) was placed atop the sand pack. Granular bentonite was placed atop the 0.9 m (3 ft) bentonite seal that extends to the base of the cement surface seal and neat cement grout surface seal (approximately 3 m [10 ft] thick) was placed to 0.1 m (0.5 ft) bgs.

The annular fill for PRZ and aquifer monitoring wells fitted with ERT electrodes consists of clean, rounded Colorado silica sand from total depth to approximately 0.6 m (2 ft) above the top of the screen followed by cement grout to 0.3 m (1 ft) bgs (Section 2.1).

The surface completions of the monitoring wells have a steel landing plate designed to support the dedicated submersible pump and pipe as well as provide access for datalogger/transducer cable and pump power cable. The PRZ monitoring well pumps are 9.8 m (32 ft) bgs connected to surface by pipe that passes through landing plate, where it is held in place by coupler connected to a tee and fitted with a groove coupler for connection with Tygon® flex tubing that extends to the sample rack. The aquifer monitoring wells are similar in construction however the well pump is connected to the surface by 11.3 m (37 ft) of pipe.

Well heads were capped using a 0.3 by 0.3 m (1 by 1 ft) weatherproof flush-mount well vault placed in a 0.6 by 0.6 m (2 by 2 ft) concrete pad set approximately 2.5 cm (1 in.) above ground surface (Figure 2-9).

Final well development of all the monitoring wells was performed using a 0.5 hp submersible pump capable of pumping up to 56.7 L/min (15 gal/m). The PRZ monitoring wells were developed using a 12 V submersible pump capable of pumping 8 L/min (2 gal/min). The actual pumping rate was approximately 59.8 L/min (15.8 gal/min) for aquifer monitoring wells and 9.5 L/min (2.5 gal/min) for PRZ aquifer monitoring wells. Development was considered complete when the purge water was visibly clear. Well development information for the PRZ monitoring wells and aquifer monitoring wells can be found in Tables 2-10 and 2-11, respectively.

®Tygon is a registered trademark of the Saint-Gobain Performance Plastics Corporation, Solon, Ohio.

Figure 2-9. Well Vault for a Monitoring Well Equipped with Electrical Resistivity Tomography Electrodes

Table 2-10. Periodically Rewetted Zone Monitoring Wells Development Summary

Borehole ID/ Well Name	Date Developed	Initial Water Level (m/ft) bgs	Duration Pumped (min)	Total Volume Pumped (L/gal)
C9690/399-1-146	5/23/2017	7.38/24.38	41	2324.7/615
C9691/399-1-147	5/24/2017	7.41/24.48	33	1871.1/495
C9692/399-1-148	5/8/2017	7.83/25.87	40	2388.96/632
C9693/399-1-149	4/27/2017	7.5/24.75	51	2891.7/765
C9694/399-1-150	5/9/2017	7.87/26	45	2687.58/711
C9696/399-1-152	5/24/2017	7.39/24.4	40	2268/600
C9697/399-1-153	5/25/2017	7.48/24.7	51	2891.7/765
C9698/399-1-154	5/23/2017	7.4/24.42	49	2778.3/735

Reference: SGW-61092, *Borehole Summary Report for the Installation of Forty Eight Injection wells and Nineteen Monitoring Wells at the 300-FF-5 Operable Unit, FY 2017.*

bgs = below ground surface

ID = identification

Table 2-11. Aquifer Monitoring Well Development Summary

Borehole ID/ Well Name	Date Developed	Initial Water Level (m/ft) bgs	Duration Pumped (min)	Total Volume Pumped (L/gal)
C9699/399-1-155	5/15/2017	7.31/24.15	75	4479.3/1185
C9700/399-1-156	5/8/2017	7.82/25.81	53	2785.8/737
C9701/399-1-157	5/15/2017	7.60/25.1	53	3144.9/832
C9702/399-1-158	5/23/2017	7.42/24.5	37	3144.9/832
C9703/399-1-159	5/24/2017	7.39/24.4	43	2438.1/645
C9704/399-1-160	4/25/2017	7.50/24.78	26	1474.2/390
C9705/399-1-161	5/24/2017	7.39/24.4	74	4195.8/1110
C9706/399-1-162	5/25/2017	7.66/25.3	20	1134/300
C9708/399-1-164	3/13/2017	9.54/31.5	22	138.72/36.7
C9709/399-1-165	3/13/2017	9.65/31.85	26	245.7/65
C9710/399-1-166	3/13/2017	9.27/30.6	111	138.87/36.74

Reference: SGW-61092, *Borehole Summary Report for the Installation of Forty Eight Injection wells and Nineteen Monitoring Wells at the 300-FF-5 Operable Unit, FY 2017.*

bgs = below ground surface

ID = identification

Table 2-12 lists the eight PRZ monitoring wells installed for the Stage B uranium sequestration system and the one existing well used as part of the PRZ monitoring system. Table 2-13 lists the eleven aquifer monitoring wells installed for Stage B uranium sequestration system and the four existing wells that are being used as part of the aquifer monitoring system. The tables include the borehole ID and well name, construction date, surveyed coordinates, total depth, and screened interval for each well. Additional information on the wells is contained in SGW-61092.

Table 2-12. Stage B PRZ Monitoring Wells

Borehole ID/ Well Name	Construction Date	Coordinates (NAD83 State Plane)		Total Depth (m/ft) bgs	Screened Interval (m/ft) bgs		ERT Well
		Northing (m)	Easting (m)		Top	Bottom	
C9690/399-1-146	2/22/2017	116568.33	594245.11	11.1/36.5	8.48/28	9.99/32.99	--
C9691/399-1-147	4/25/2017	116486.15	594216.11	11.0/36.4	8.52/28.14	10.0/33.03	--
C9692/399-1-148	3/28/2017	116530.19	594256.22	11.1/36.6	8.47/27.96	9.98/32.96	--
C9693/399-1-149	5/1/2017	116480.20	594187.89	13.7/45.4	8.43/27.84	9.95/32.84	Yes
C9694/399-1-150	3/21/2017	116546.42	594227.52	13.5/44.5	8.49/28.04	10.0/33.04	Yes
C9696/399-1-152	5/8/2017	116498.04	594247.64	13.7/45.3	8.46/27.92	9.97/32.92	Yes

Table 2-12. Stage B PRZ Monitoring Wells

Borehole ID/ Well Name	Construction Date	Coordinates (NAD83 State Plane)		Total Depth (m/ft) bgs	Screened Interval (m/ft) bgs		ERT Well
		Northing (m)	Easting (m)		Top	Bottom	
C9697/399-1-153	4/10/2017	116453.37	594166.08	10.9/36.2	8.48/28	9.99/32.97	--
C9698/399-1-154	2/13/2017	116583.27	594227.29	11.0/36.3	8.40/27.75	9.92/32.75	--
C8935/399-1-73*	8/6/2015	116494.22	594081.69	12.20/40.0	8.62/28.27	10.14/33.27	--

References: NAD83, North America Datum of 1983.
SGW-61092, *Borehole Summary Report for the Installation of Forty Eight Injection wells and Nineteen Monitoring Wells at the 300-FF-5 Operable Unit, FY 2017.*

*Indicates existing well used for PRZ monitoring system

bgs = below ground surface

ERT = electrical resistivity tomography

ID = identification

PRZ = periodically rewetted zone

Table 2-13. Stage B Aquifer Monitoring Wells

Borehole ID/ Well Name	Construction Date	Coordinates (NAD83 State Plane)		Total Depth (m/ft) bgs	Screened Interval (m/ft) bgs		ERT Well
		Northing (m)	Easting (m)		Top	Bottom	
C9699/399-1-155	2/27/2017	116542.84	594231.85	13.6/44.9	10.3/34.04	11.8/39.03	Yes
C9700/399-1-156	3/30/2017	116529.8	594255.68	14.2/47.0	10.3/33.99	11.8/38.99	--
C9701/399-1-157	3/1/2017	116568.62	594246.17	13.8/45.5	10.3/34.16	11.8/39.16	--
C9702/399-1-158	2/15/2017	116583.86	594228.26	13.7/45.2	10.3/34.2	11.8/39.2	--
C9703/399-1-159	5/4/2017	116502.68	594249.07	13.6/45.0	10.4/34.53	11.9/39.53	Yes
C9704/399-1-160	4/27/2017	116481.98	594183.95	13.6/45.0	10.1/33.6	11.6/38.6	Yes
C9705/399-1-161	4/25/2017	116486.63	594214.9	13.6/45.0	10.4/34.34	11.9/39.33	--
C9706/399-1-162	4/6/2017	116454.04	594167.02	13.6/45.0	11.0/36.4	12.5/41.38	--
C9708/399-1-164	2/1/2017	116395.64	594236.47	13.5/44.7	10.2/33.91	11.7/38.91	--
C9709/399-1-165	1/31/2017	116474.08	594332.45	13.6/44.8	10.2/33.92	11.7/38.92	--
C9710/399-1-166	1/31/2017	116586.27	594323.65	13.6/44.8	10.3/34.18	11.8/39.17	--
A5028/399-1-17A*	11/13/1986	116413.787	594112.87	12.65/41.5	7.62/25.0	12.19/40.0	--
A5040/399-1-7*	2/25/1985	116335.09	594260.06	17.53/57.5	7.62/25.0	17.53/57.5	--
C5000/399-1-23*	4/21/2006	116453.15	594113.51	35.35/116.0	7.60/24.94	15.22/49.95	--
C8934/399-1-72*	8/6/2015	116494.16	594080.16	14.78/48.5	12.09/39.67	13.62/44.67	--

Table 2-13. Stage B Aquifer Monitoring Wells

Borehole ID/ Well Name	Construction Date	Coordinates (NAD83 State Plane)		Total Depth (m/ft) bgs	Screened Interval (m/ft) bgs		ERT Well
		Northing (m)	Easting (m)		Top	Bottom	

References: NAD83, North America Datum of 1983.
SGW-61092, *Borehole Summary Report for the Installation of Forty Eight Injection wells and Nineteen Monitoring Wells at the 300-FF-5 Operable Unit, FY 2017*.

*Existing well locations used for groundwater monitoring.

bgs = below ground surface
ERT = electrical resistivity tomography
ID = identification

2.2.1 Unexpected Conditions

The following sections document unexpected conditions encountered during installation and testing of the monitoring wells.

2.2.1.1 Issues with Installation of Monitoring Well C9694/399-1-150

Thursday, March 16, 2017 – In the morning, the drill crew/rig set up on borehole C9694. Drillers advanced the borehole and retrieved the core barrel from 3 to 6.1 m (10 to 20 ft) bgs. The RCT discovered contamination at 500 cpm on the sediment at 3.6 m (12 ft) bgs. The geologist and RCT decided to allow a 30 minute decay period. The sample from 3.0 to 3.9 m (10 to 13 ft) bgs did not decay after 30 minutes and remained at 400 to 600 cpm. An optional sample was taken from 3 to 3.8 m (10 to 12.5 ft) bgs. Total depth of 13.7 m (45 ft) bgs was reached in the afternoon and all drilling activities concluded.

2.2.1.2 Issues with Installation of Monitoring Well C9705/399-1-161

Thursday, April 20, 2017 – In the morning, the drill crew/rig set up on borehole C9705. Drillers advanced the borehole and retrieved the core barrel from 3 to 6.1 m (10 to 20 ft) bgs. The RCT discovered contamination at 5000 dpm. One optional sample was collected at 4.8 to 5.2 m (16 to 17 ft) bgs and the rest of the sediment was moved to an RMA. No grab samples were collected at 4.5 m (15 ft) bgs due to contamination. Total depth was reached, and all drilling activities concluded.

2.2.2 Summary

Table 2-14 provides a summary of the resources required for installing and developing the injection and monitoring wells and the duration of the activity.

Table 2-14. Summary of Project Resources Needed for the Injection and Monitoring Wells

Stage B Project Phase	Description	Resource Quantity (hr)*	Duration* (days)	
			Installation	Developing
Injection wells	Drilling, installation, construction, and development of wells	550	Injection wells – 50	Injection wells – 5
Monitoring wells	Drilling, installation, construction, and development of wells	400	Monitoring wells – 31	Monitoring wells – 9

*Based on a 4-day work week.

2.3 Decommissioned Wells

Fifteen PVC groundwater wells installed in 2009 as part of the polyphosphate infiltration treatability test will be decommissioned in accordance with WAC 173-160, "Minimum Standards for Construction and Maintenance of Wells," and the decommissioning profile provided by CH2M HILL Plateau Remediation Company (Figure 2-10). Well construction summary information for the 15 wells is presented in Table 2-15. The need to decommission these 15 wells was identified in SGW-60243. These wells are not *Washington Administrative Code* compliant and present a safety hazard to operators and laborers.

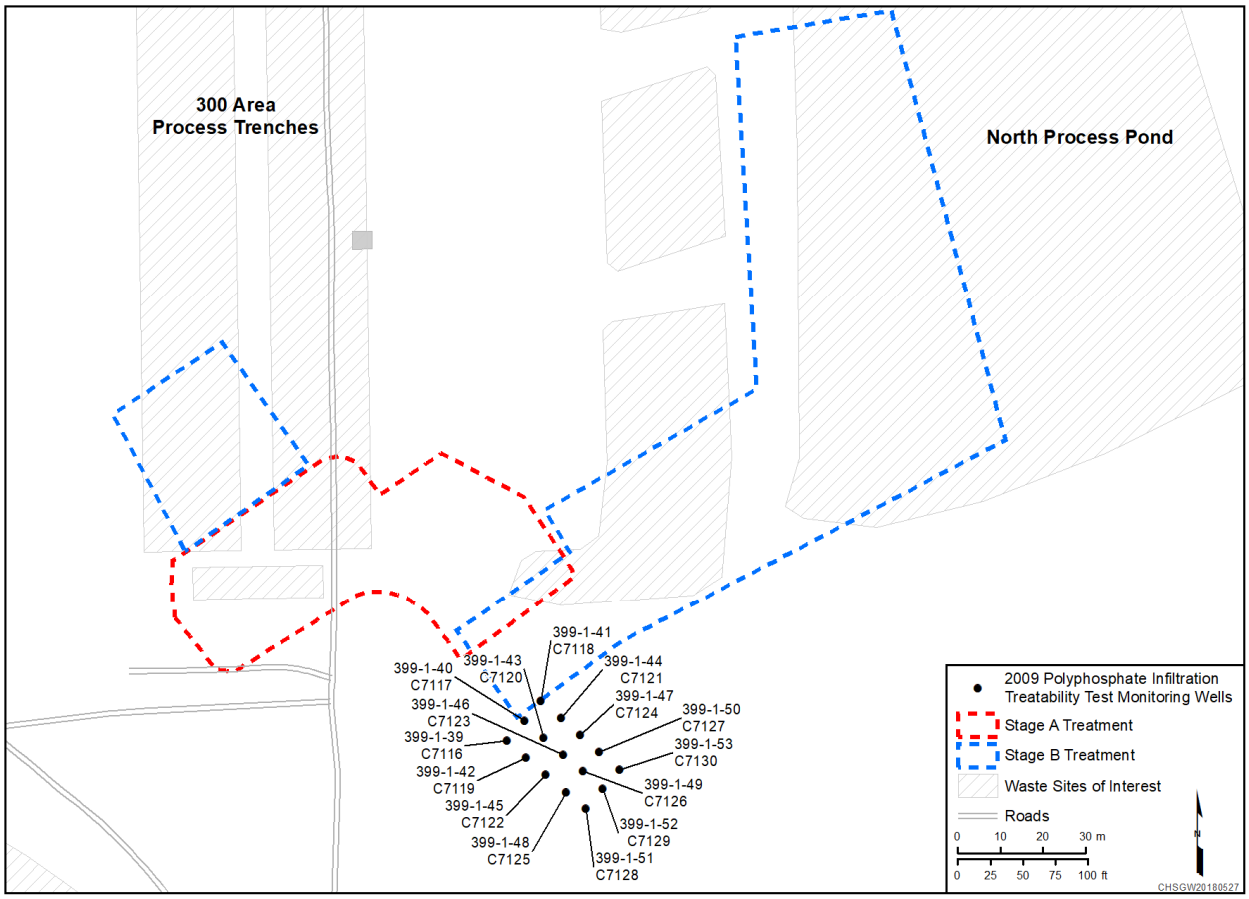

Figure 2-10. 2009 Infiltration Wells to be Decommissioned Chemical Mixing Skids and Site Infrastructure

Table 2-15. Well Construction Summary for the 300-FF-5 OU PVC Wells to be Decommissioned

Well		Total Depth (m/ft) bgs	Screen and Casing Diameter (cm/in.)	Construction Depth (m/ft) bgs	Screened Interval (m/ft) bgs
ID	Name				
C7116	399-1-39	12.87/37	10/4.0	10.94/35.91	10.07-10.83/33.05-35.55
C7117	399-1-40	12.70/36.5	10/4.0	10.95/35.94	10.08-10.84/33.08-35.58
C7118	399-1-41	13.05/37.5	10/4.0	10.90/35.79	10.04-10.79/32.94-35.43
C7119	399-1-42	12.87/37	10/4.0	10.95/35.93	10.08-10.84/33.08-35.57

Table 2-15. Well Construction Summary for the 300-FF-5 OU PVC Wells to be Decommissioned

Well		Total Depth (m/ft) bgs	Screen and Casing Diameter (cm/in.)	Construction Depth (m/ft) bgs	Screened Interval (m/ft) bgs
ID	Name				
C7120	399-1-43	12.87/37	10/4.0	10.92/35.85	10.06-10.81/33.01-35.49
C7121	399-1-44	12.70/36.5	10/4.0	10.95/35.95	10.08-10.84/33.09-35.59
C7122	399-1-45	13.75/39.5	10/4.0	10.95/35.93	10.07-10.83/33.07-35.55
C7123	399-1-46	12.87/37	10/4.0	10.93/35.89	10.08-10.83/33.08-35.55
C7124	399-1-47	12.70/36.5	10/4.0	11.01/36.14	10.14-10.90/33.28-35.78
C7125	399-1-48	12.87/37	10/4.0	10.94/35.9	10.07-10.83/33.05-35.54
C7126	399-1-49	12.90/37.08	10/4.0	10.94/35.91	10.07-10.83/33.06-35.55
C7127	399-1-50	12.87/37	10/4.0	10.94/35.9	10.07-10.83/33.05-35.54
C7128	399-1-51	13.74/39.5	10/4.0	10.96/35.97	10.09-10.85/33.11-35.61
C7129	399-1-52	12.94/37.2	10/4.0	10.92/35.84	10.05-10.81/33-35.49
C7130	399-1-53	12.84/36.9	10/4.0	10.92/35.83	10.05-10.81/32.98-35.47

References: NAD83, North America Datum of 1983.

SGW-41618, *Borehole Summary Report for the Installation of Fifteen Polyphosphate Treatability Test Wells in the 300-FF-5 Operable Unit, FY 2009*.

bgs = below ground surface
ID = identification
OU = operable unit
PVC = polyvinyl chloride

The following subsections describe installation and testing of the chemical mixing skids and other site infrastructure in the Stage B treatment area in accordance with SGW-60243.

2.3.1 Chemical Mixing Skids

Two remediation skids were designed and constructed as part of the apatite permeable reactive barrier remedy for the 100-NR-2 OU (DOE/RL-2010-29, *Design Optimization Study for Apatite Permeable Reactive Barrier Extension for the 100-NR-2 Operable Unit*). The remediation skids were used for the 300-FF-5 OU EA remedy in Stage A and Stage B. Each remediation skid is capable of delivering polyphosphate solution at a targeted flow rate of up to 1,135 L/min (300 gal/min). Feed water from the Columbia River is transferred via aboveground hoses to the remediation skids, where it is blended with the polyphosphate concentrate in a static inline mixing chamber. Following mixing, a manifold distributes the diluted polyphosphate solutions to transfer hoses for distribution to the injection well network.

The two chemical mixing skids arrived onsite at the 300 Area on May 22, 2018, and were installed on June 20, 2018. The two chemical mixing skids were tested on August 20, 2018. Figure 2-11 shows the mixing skids set up in the Stage B area.

Figure 2-11. Chemical Mixing Skids in the 300 Area

Two 75 kVA generators rented for the duration of the project supplied power for each mixing skid. Each mixing skid was connected to a portable filter bank composed of inline filters to remove particulates and debris from river water prior to distribution to the mixing skids. Mixing skid #1 was connected to a six-pack filter bank and mixing skid #2 was connected to a nine-pack filter bank (Figure 2-12).

Figure 2-12. Inline Filter Packs for Chemical Mixing Skids

River water distribution components included a submersible river hose and an upland river supply hose. The submersible river hose and upland river supply hose are 10 cm (4 in.) diameter fire hoses connected by camlocks. A total length of 76.2 m (250 ft) of submersible river hose and 150 m (981 ft) of upland river supply hose was used for each of the two skids for a total of 226.2 m (1,231 ft) of 10 cm (4 in.) diameter hose.

The polyphosphate injection well hoses are 7.6 cm (3 in.) diameter fire hoses connected to the 48 injection wells. The total length of hose needed to supply all 48 injection wells was approximately 7010 m (23,000 ft). Each mixing skid can be connected to six wells at a time, so the 48 injection wells were divided into four injection zones, each consisting of 12 wells (Figure 2-1). The color-coded injection hoses (Figure 2-13) were selected to match the injection zone color on Figure 2-1. When the schedule required injection into a different injection zone, the appropriate set of injection hoses was connected to the chemical mixing skids.

The mixing skids were tested using filtered river water on August 20, 2018. The chemical mixing system and polyphosphate injection hoses were also connected and tested. The tests included functional checks of flow meters, pressure gauges, programmable logic controllers, variable frequency drives, and injection connections. River water from the tests was injected via injection wells into the lower vadose zone.

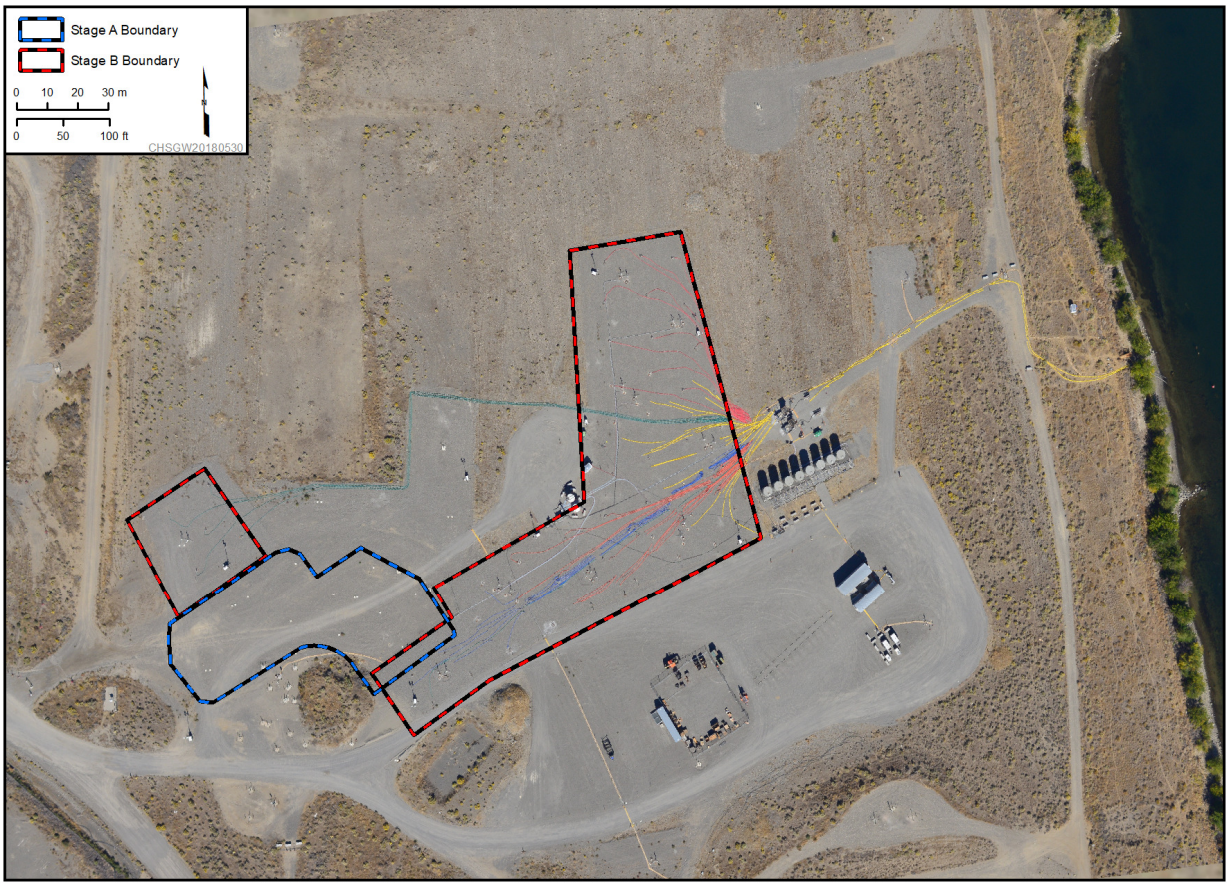

Figure 2-13. Aerial Photograph of Color-Coded Injection hoses

2.3.2 Site Infrastructure

Support equipment was provided to ensure a safe and manageable work environment. Support infrastructure included personnel accommodations, power supply, lighting, and equipment laydown area.

On December 28, 2016, a mobile office trailer and a restroom trailer were brought onsite to provide facilities for the workers. The mobile office was equipped with computers including Hanford Local Area Network access along with printing, fax/scan, and photocopy capability. The work site was equipped with a small trailer to support ERT operations. A 12 m (40 ft) long CONEX box was placed at the site to provide secure equipment storage adjacent to a fenced laydown area. Two 75 kVA generators were used to provide power for operations on the site.

A gravel road was constructed from the Stage B treatment area to the shoreline access point to accommodate hose and power installation. Gravel roads were constructed to provide access to the chemical storage tanks and the operations trailers. Gravel pads were constructed for the mixing skids, chemical tanks, purge water storage tanks, central sampling system racks, injection and monitoring wells, parking lot, laydown area, and for the office, restroom, and ERT trailer.

Seven light plants were arranged to provide lighting to all main operation areas during low-light conditions. Light plants were staged one each at the chemical tanks, the sample manifold, at the north central and southern areas of the Stage B EA area to provide adequate lighting of the injection and monitoring wells within the area.

The following components of the project require power sources:

- Mixing skids/river pumps
- ERT system
- Office trailer
- Work area lighting
- Monitoring well submersible pumps
- Additional items, such as portable emergency shower/eye wash station and heat blankets
- Air compressors for well packers

Lighting was supplied for the following site areas and components:

- Office trailer
- Sampling manifold
- Site area
- Chemical tanks

Figure 2-14 is an aerial view of the Stage B uranium sequestration system showing the location of the river pumps, chemical mixing skids, chemical storage tanks, and the general location of the Stage B treatment area. The injection wells and color-coded injection hoses can be seen within the Stage B treatment area.

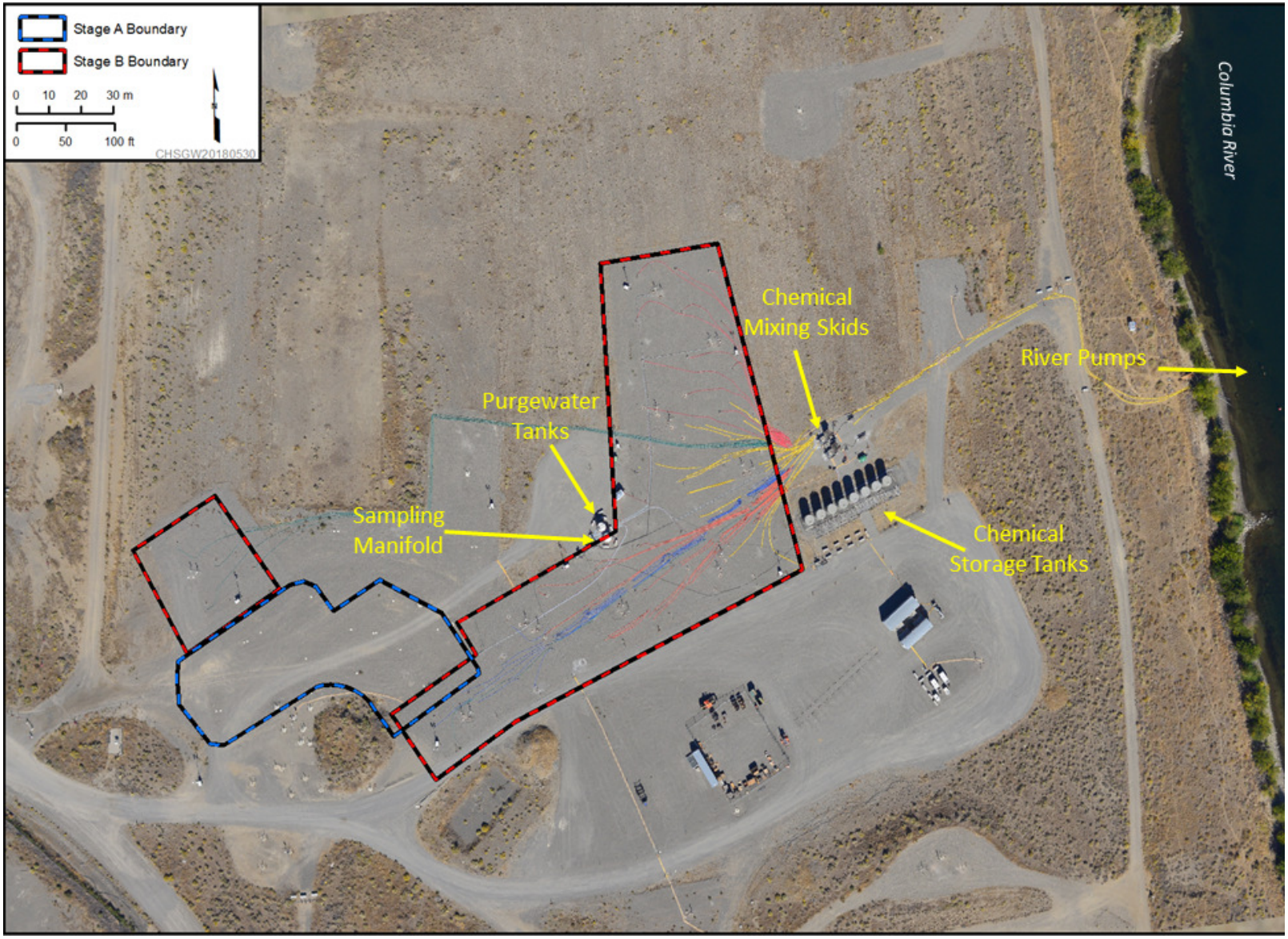

Figure 2-14. Aerial Photograph of the Stage B Treatment Area

2.3.3 Unexpected Conditions

The following issue documents an unexpected condition encountered during installation and testing of the mixing skids and site infrastructure.

Monday, July 23, 2018 – During construction acceptance testing (CAT) for the construction completion document (CCD), suspect or counterfeit bolts were discovered to be in use on the mixing skid filter banks and the two portable filter skids. A stop work was issued, and the suspect bolts were tagged. The proper replacement parts were obtained and installed on the mixing filter skids banks and the portable filter skids. The filter skids and banks were inspected and released for use by engineering.

2.3.4 Summary

Table 2-16 provides a summary of the resources required for installation and testing of the chemical mixing skids, site infrastructure, and duration of the activities.

Table 2-16. Summary of Project Resources Needed for the Chemical Mixing Skids and Site Infrastructure

Stage B Project Phase	Description	Resource Quantity (hr)*	Duration* (days)	
			Installation	Testing
Chemical mixing skids	Set up mixing skids on site and connect hoses.	20	1	1
Site infrastructure	Install light plants, compressors, safety showers, roadwork, set up trailers, set up electrical associated with skids and sampling system.	210	21	0

*Based on a four-day work week.

2.4 River Pumps

Feed water for the polyphosphate solutions is obtained using two separate submersible pumps (Grundfos™ No. 385S200-3A), each capable of supplying up to 1,135 L/min (300 gal/min). Feed water is piped from the Columbia River to the chemical mixing skids. A 10 cm (4 in.) diameter hose conveyed water from the water source approximately 150 m (490.5 ft) to the chemical mixing skids.

Withdrawal of water from the Columbia River and injection of polyphosphate solution during the uranium sequestration process has the potential to affect three fish species listed under the *Endangered Species Act of 1973* and/or their critical habitat.

On April 14, 2015, U.S. Department of Energy (DOE) requested written concurrence that pumping water from the Columbia River in the 300 Area to support the EA is not likely to have adverse effects on two species listed as threatened or endangered or critical habitats designated under the *Endangered Species Act of 1973*. Based on analysis (WCR-2015-2480, "Endangered Species Act Section 7(a)(2) Concurrence Letter for Installation and Operations of a Uranium Sequestration Groundwater Treatment System near the Shoreline of the Columbia River at the 300 Area of the Hanford Site, Benton Country, Washington [HUC 170200160602] City of Richland-Columbia River"), the National Marine Fisheries Service concurred with DOE that the proposed action is not likely to have adverse effects on upper Columbia

™Grundfos is a registered trademark of Grundfos Holding A/S Corporation, Bjerringbro, Denmark.

River spring-run Chinook salmon and steelhead and designated critical habitats. Similarly, informal consultation for the federally listed as threatened bull trout (*Salvelinus confluentus*) was initiated with the U.S. Fish and Wildlife Service (USFWS). In Letter 01EWFW00-2015-I-0567, USFWS (2015) concurred with DOE that the proposed action is not likely to have adverse effects on bull trout and its designated critical habitat.

A cultural resources survey of the proposed location of aboveground water lines and EA area was conducted on May 27, 2014, and documented in MSA-1502630, "Ecological and Cultural Clearance for Columbia River Access and Submersible Pumps in the Columbia River for the 300 Area Sequestration Remedial Activities, Hanford Site, Benton Country, Washington (HCRC# 2014-300-004, ECR-2015-303)." The survey did not identify any previously unrecorded cultural material. Based on the cultural resources survey, a pipe route for the water lines from the river pumps was selected to avoid known cultural resources.

On July 19, 2017, three (two primary and one spare) platform-mounted submersible pumps with fish screens were placed in the Columbia River to feed river water through a filter bank to each chemical mixing skid. The submersible pumps, mounted on skid plates, were transferred to the approved pumping location by boat and set into the river one at a time. Figure 2-15 shows a submersible pump on the mounting skidplate.

Figure 2-15. Submersible Pump, Fish Screen, and Mounting Skidplate

The river pumps were loaded onto a boat at Leslie Groves boat launch in north Richland, then transported to the 300 Area shoreline at the designated river access point. Upon arrival at the river, shoreline electricians and pipefitters had power cables and 10 cm (4 in.) diameter river hoses ready to connect to the pump skids. After connections were made, the river pumps, connected power cable, and feed hose were transported into the river channel.

The pumps were set in the river approximately 9.2 m (30 ft) apart using a boat mounted hoist in approximately 2.4 m (8 ft) of water and approximately 30.8 m (100 ft) from shore. Each pump was tethered upstream with a 30.8 m (100 ft) long anchor line and a 15.4 m (50 ft) long metal winch line attached to a 15.4 m (50 ft) long sinking rope line as a leader. When the pumps are removed from the river at the conclusion of the project, a grapple will be used to retrieve this line, and the pumps will be winched into the boat. Figure 2-16 shows a submersible pump and skidplate assembly being lowered into the Columbia River near the 300 Area.

Figure 2-16. Installation of Submersible Pump and Skidplate

2.4.1 Unexpected Conditions

The following issue documents unexpected conditions during installation and testing of the river pumps.

Monday, July 23, 2018 – On Monday morning, during CAT testing for the CCD, the river pumps were turned on for testing. A large hole in the submersible river hose connecting the river pumps to the upland river water supply fire hose was discovered and a discharge of river water to the river occurred (Figure 2-17). Upon review, it was discovered that the engineered equivalent used in place of the required hose was not equivalent and subsequently failed. It was determined that the hose would be replaced with the required hose. The river pump hose was changed during the last week of July 2018.

Figure 2-17. River Pump Hose Flaws Discovered after CCD Testing

Associated with this incident there was a subsequent stop work; it was reported that during river pump installation in the river, when the third and final pump skid was being placed in river (in the furthermost upstream position) the anchor line failed to "catch" on river bottom causing the third pump to travel downstream and scrape across the previously installed pumps (#1 and #2). The stop work was in response to worker concerns that the electrical supply lines to the pump(s) may have been damaged. The resistance of the insulation on the electrical supply lines was tested (meggered) on multiple occasions both prior to and during injection operations to ensure the wire insulation remained uncompromised.

2.4.2 Summary

Table 2-17 provides a summary of the resources required for installation and testing of river pumps and the duration of the activity.

Table 2-17. Summary of Project Resources Needed for the River Pumps

Stage B Project Phase	Description	Quantity (hr)	Duration* (days)	
			Installation	Testing
Set river pumps	Set up river pumps along riverbank and connect hoses and cables	20	1	1

*Based on a four-day work week

2.5 Chemical Tanks

Polyphosphate chemicals are delivered to the site in concentrated liquid form. Concentrated polyphosphate solutions were delivered as a mixture of sodium and potassium orthophosphate (NaH2PO4 and KH2PO4) and sodium pyrophosphate (Na4P2O7) with the pH in the range of 7 to 7.5. The contract specification required preparing a single mixture of orthophosphate (at 83,000 mg/L PO4) and pyrophosphate (at 12,226 mg/L of Na4P2O7). The concentrated mixed solutions have combined phosphorus (total P) concentration of about 30,000 mg/L (27,100 mg/L from orthophosphate and 2,850 from pyrophosphate), which is equivalent to about 91,700 mg/L of phosphate (as PO4) concentration. At these concentrations, the estimated volume of concentrated polyphosphate solution required for Stage B is about 1,461,300 L (386,590 gal). Concentrated polyphosphate solutions were delivered to the 300 Area in tanker trucks during the injection phase and stored in seven 30,283 L (8,000 gal) chemical storage tanks. Prior to injection these concentrated solutions were diluted with river water to achieve the target injected phosphate (PO4) concentration of about 8,000 mg/L with pH between 7 – 7.5.

Eight 30,283 L (8,000 gal) storage tanks were moved from the Stage A EA location and installed at the Stage B EA area on May 30, 2018. The tanks are equipped with sight tubes for level indication and 7.62 cm (3 in.) male inlet and outlet ports. Tanks were positioned on spill pads, which are on a 5 to 10.1 cm (2 to 4 in.) thick layer of sand. The chemical tanks were located to accommodate chemical delivery truck access and spill control.

The tank configuration included seven tanks containing polyphosphate solution. Once in place, a chemical distribution header was made using suction resistant 7.6 cm (3 in.) diameter clear flexible hose. The header was configured to allow for flow of polyphosphate solutions to both skids, resulting in four chemical feed lines traversing the EA from the chemical tanks to the mixing skids. Figure 2-18 shows the tanks and spill protection. The length of 7.6 cm (3 in.) diameter chemical feed hose required to connect the header to the mixing skids was approximately 30 m (100 ft) for each feed line for a total of 122 m (400 ft).

The tanks were leak tested on July 11, 2018, by filling each to a height of approximately 1.2 m (4 ft) with river water. The tanks were then emptied on July 11, 2018; river water from the tests was injected into the lower vadose zone. One of the tanks was known to leak and was removed from use during the project.

In preparation for chemical receipt, a portable safety shower and eyewash station was brought onsite and set up at the chemical tank and mixing skid areas.

Photo Credit: Andrea Starr | Pacific Northwest National Laboratory

Figure 2-18. Chemical Storage Tanks

2.5.1 Unexpected Conditions

The following issue documents an unexpected condition encountered during installation and testing of the chemical feed tanks.

July 11, 2018 – Tank #8 was known to leak, and it was determined that a repair to the leaking tank was not feasible. This tank was administratively removed from the system and will not be used for holding chemicals. The tank was mechanically disconnected on August 21, 2018.

2.5.2 Summary

Table 2-18 provides a summary of the resources required for installation and testing of chemical storage tanks and the duration of the activity.

Table 2-18. Summary of Project Resources Needed for the Chemical Storage Tanks

Stage B Project Phase	Description	Quantity (hr)	Duration* (days)	
			Installation	Testing
Chemical storage tanks	Set up and install chemical storage tanks on protective spill pad constructed	30	2	1

*Based on a four-day work week.

2.6 Electrical Resistivity Tomography Network

Dispersal of the polyphosphate solutions into the soil is expected to increase electrical conductivity significantly in the lower vadose zone and PRZ by increasing both saturation and pore fluid specific conductance. These changes enable use of timelapse ERT for remote monitoring of the advancement of the wetting front of the injectant solution through the lower vadose zone and PRZ.

Eighteen wells, composed of 12 injection wells and 6 monitoring wells, were fitted with downhole ERT electrodes. The electrodes enable crosshole ERT imaging near the instrumented wells for both pre-injection geologic characterization and time-lapse monitoring of the treated zone during and after treatment. The ERT-fitted wells are arranged in three clusters with four injection wells and two monitoring wells in each cluster. The injection area is divided into four zones with 12 injection wells per zone; the ERT clusters were positioned along the margin of two zones to bridge zones (e.g., cluster 1 bridges injection zones 1 and 2; cluster 2 bridges zones 2 and 3; and cluster 3 bridges zones 3 and 4). This design facilitated determining the radius of influence for individual injection wells as well as chronicling the coalescence between injection zones. Figure 2-19 shows the location of the ERT monitoring zones and the ERT-fitted wells within the Stage B treatment area.

ERT network installation commenced on February 27, 2017, coinciding with completion of each injection and monitoring well selected as part of the ERT network. Installation of each ERT instrumented well occurred with close coordination between PNNL personnel and the drilling operators, in the following sequence:

1. Drilling operators completed drilling the borehole to total depth.
2. PNNL personnel prepared the electrodes and custom cable for installation on the well casing sections.
3. PNNL and drilling personnel lowered each section of well casing in sequence into the borehole, connecting casing length section by section. As each length of casing was positioned at top of borehole, the electrodes and cable were attached then lowered. PNNL personnel attached cable take-outs to the electrodes.
4. Drilling operator’s backfilled the annulus according to specifications.
5. The surface completion of each instrumented well included an oversized well box to accommodate storage and protection of additional cable length and cable plug end.

Sixteen electrodes were installed on the outer wall of the PVC casing of each ERT-fitted well (Figure 2-20). The electrodes consist of wire mesh wrapped around the casing and secured in place at the upper and lower margins with a low profile band clamp. Each electrode wraps the entire circumference of the casing. Figure 2-21 shows an ERT electrode installed on the well casing. Figure 2-22 shows an ERT-fitted well casing as it is lowered into the borehole.

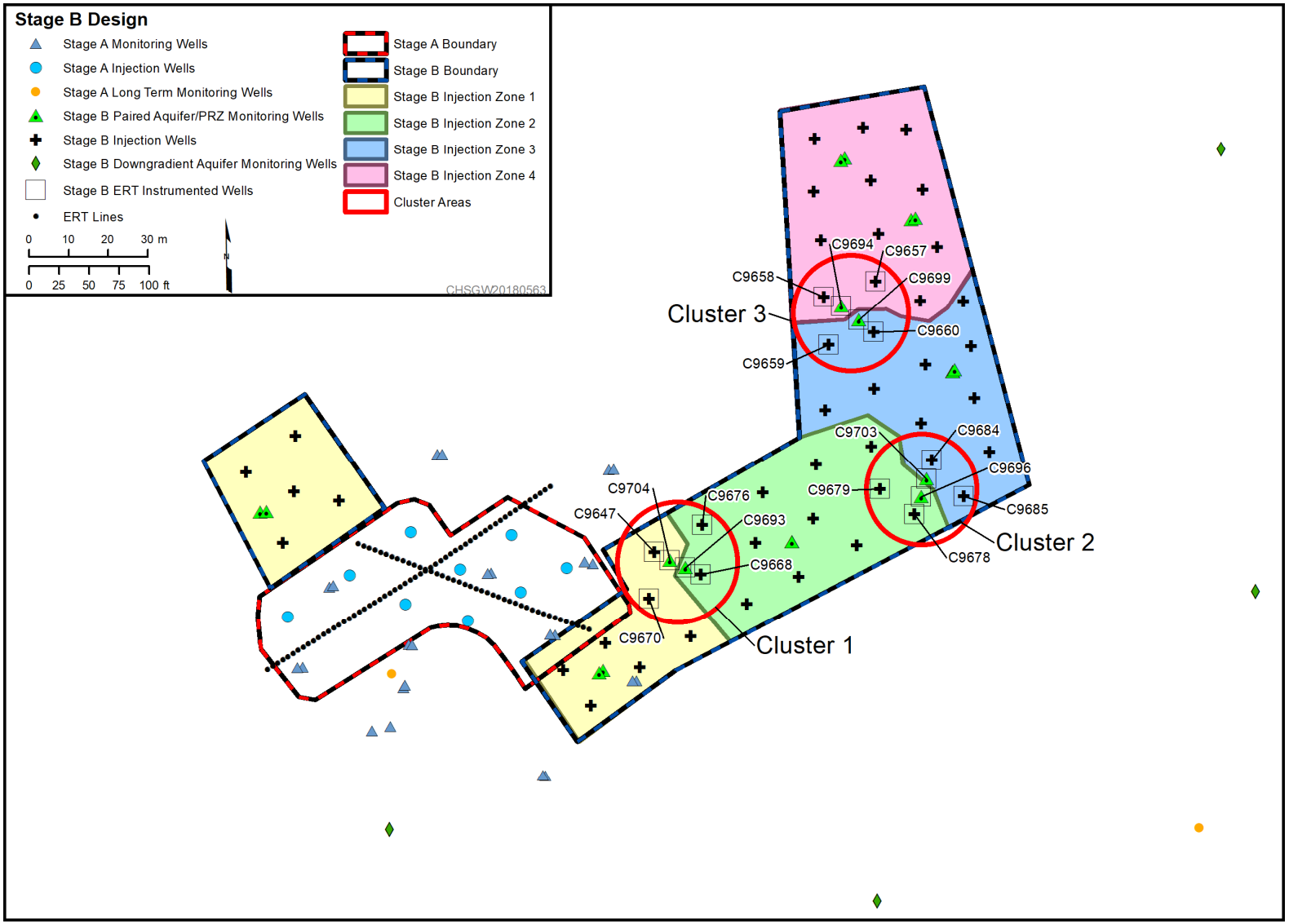

Figure 2-19. ERT Monitoring Zones and ERT-Fitted Wells in the Stage B Treatment Area

Electrode	top m (bgs)	bottom m (bgs)	top ft (bgs)	bottom ft (bgs)
1	1.90	2.00	6.31	6.56
2	2.65	2.75	8.77	9.02
3	3.40	3.50	11.23	11.48
4	4.15	4.25	13.69	13.94
5	4.90	5.00	16.15	16.40
6	5.65	5.75	18.61	18.86
7	6.40	6.50	21.08	21.33
8	7.15	7.25	23.54	23.79
9	7.90	8.00	26.00	26.25
10	8.65	8.75	28.46	28.71
11	9.40	9.50	30.92	31.17
12	10.15	10.25	33.38	33.63
13	10.90	11.00	35.84	36.09
14	11.65	11.75	38.30	38.55
15	12.40	12.50	40.76	41.01
16	13.15	13.25	43.22	43.47

Figure 2-20. Electrode Installation Detail (Not to Scale)

Figure 2-21. ERT Electrode Installed on the Well Casing

Figure 2-22. ERT-Fitted Well Casing as it is Lowered into the Borehole

2.6.1 Unexpected Conditions

Section 2.1.1.3 details issues with installing the ERT electrodes for well C9657/399-1-113.

2.6.2 Summary

Table 2-19 provides a summary of the resources required for installation and testing of the ERT network and the duration of the activity.

Table 2-19. Summary of Project Resources Needed for the Electrical Resistivity Tomography Network

Stage B Project Phase	Description	Quantity (hr)	Duration* (days)	
			Installation	Testing
Install ERT network	Install ERT electrodes on injection and monitoring well assemblies	200	19	1

*Based on a four-day work week.

ERT = electrical resistivity tomography

2.7 Sample Collection System

Twenty-one of the 24 monitoring wells in the groundwater sampling network were connected to a central sampling manifold. The central sampling manifold is configured to purge each individual monitoring well and facilitate filling the sample containers at one central location. Each of the 21 monitoring wells is equipped with a dedicated submersible pump that is controlled by an adjustable-frequency drive (AFD) for regulating and adapting the flow and pressure to match formation groundwater recharge. Tygon tubing extends from the wellhead to a central location where it connects to a manifold facilitating sampling each

individual monitoring well by opening a dedicated valve. Purge volumes are calculated for each monitoring well based on well volumes plus the volume of tubing. The system includes a sample station consisting of Unistrut® valves and rigid piping. The system includes purge water storage capacity equivalent to the volume of purge water generated in two days of sampling. The purge water will be transferred from storage tanks to tank trucks for shipment to ModuTanks™. Figure 2-23 shows the sampling system manifold and the purge water storage tanks.

Figure 2-23. Sampling System Manifold

2.7.1 Unexpected Conditions

The following sections document unexpected conditions encountered during installation and use of the sampling collection system.

2.7.1.1 Compatibility Issues with Pumps and AFDs

Monday, July 9, 2018 – On Monday morning during the CAT for the CCD, it was discovered that the Grundfos SQE05-90 and SQE05-140 pumps installed in the monitoring wells are single-phase pumps while the AFDs installed to control the pumps are three-phase and would not work for varying the speed of the pumps. The Design Authority remedy was to install an On/Off switch resulting in the pumps operating at full speed in the ON position, which bypasses the need for an adjustable speed feature.

2.7.1.2 Monitoring Well Issues

Tuesday, August 28, 2018 – On Tuesday afternoon, three monitoring wells that repeatedly tripped breakers were disconnected from the central sample collection system and added to list of wells requiring manual sampling. The three monitoring wells are 399-1-165, 399-1-166, and 399-1-7. Problems occurred because the tubing for well 399-1-165 followed an extremely lengthy, circuitous route that included sharp corners; the screen for well 399-1-166 was positioned in the Ringold Formation, which exhibits lower transmissivity; and the sample pump in well 399-1-7 was not placed deep enough into the aquifer.

®Unistrut is a registered trademark of Atkore International, Inc., Harvey, IL
™ModuTank is a trademark of ModuTanks, Inc., Long Island City, NY

2.7.2 Results

The number of monitoring wells sampled at the central sampling manifold was reduced to 18.

2.8 Data Loggers

Each of the 24 groundwater monitoring wells in the Stage B EA was instrumented with downhole transducers equipped with multiple sensors to measure specific conductance, pH, water level, and temperature for continuous measurements. The data was stored on dataloggers installed near each well,as shown in Figure 2-24. The data loggers are manually downloaded weekly in the field by technicians, and project scientists process the files for use in assessment of uranium and phosphate migration. The downhole instrumentation and data loggers were installed in 2017 and recorded data for one year before implementation of the Stage B injections.

Figure 2-24. Data Logger Setup for Groundwater Monitoring Wells

2.8.1 Unexpected Conditions

The following topic documents an unexpected condition during use of the data logger systems.

Monday, August 6, 2018 – During a review of the data logger downloads, it was determined that the dissolved oxygen sensors for the data logger transducers installed in 2017 would expire before the completion of Stage B operations.

2.8.2 Results

The dissolved oxygen sensors were replaced and calibrated during the week of August 6, 2018.

3 Summary and Lessons Learned

Installation of the final component of the Stage B uranium sequestration system was completed on July 19, 2018. The project startup review was completed on August 20, 2018, and the operating work control package was approved on August 27, 2018. The Stage B uranium sequestration system was accepted and verified for operation on August 27, 2018.

The following sections provide a summary of project duration, resources, and cost, and a review of the lessons learned.

3.1 Summary of Installation Duration and Resources

Table 3-1 provides a summary by WBS element of the duration and resources used for installation of the Stage B uranium sequestration system in the 300 Area. Durations and resources for each WBS element have been brought forward from the summary tables in Chapter 2.

Table 3-1. Summary of Installation Duration and Resources by Component

WBS Element	Duration[a] (days)	Resources (hr)
Injection and monitoring wells	95	950
Mixing skids and infrastructure	2	20
	21	210
River pumps	2	20
Chemical tanks	3	30
ERT	20	200
Total installation and testing	143[b]	1430

a. Includes installation and testing.

b. Duration from beginning of first (well installation) to end of last (ERT) activity; some activities overlapped.

ERT = electrical resistivity tomography

WBS = work breakdown structure

3.2 Post-Job Review

Post-job review meetings covering the 300-FF-5 OU Stage B uranium sequestration activities were held on September 26, 2018. Representatives of the groups and disciplines that supported and executed installation of the Stage B system participated in the meetings. The following subsections summarize the findings from the post-job review meetings. Each subsection corresponds to one of the five core functions of the Integrated Safety Management System.

3.2.1 Define Work Scope

The objective of this core function is to define the work activities necessary to achieve the goals of the project in a safe and environmentally sound manner. The following findings were identified during the Stage B post-job review meetings:

- The sampling and analysis plan (DOE/RL-2014-42-ADD1) required collection of groundwater samples from monitoring wells during injection. Due to the sample pump breakers being too small, operations was unable to control the speed of the well pumps. This caused some breakers for wells to trip and other wells to run dry during purging, which prevented sampling. Due to this issue, some wells were disconnected from the sampling manifold system and manually sampled, as described in Section 2.7.1.1.

3.2.2 Hazard Identification and Work Planning

Objectives of this core function are to identify potential hazards and determine appropriate actions to mitigate the hazards. This information is then integrated into work planning. The following findings were identified during the Stage B post-job review meetings:

- Hazards for the tanker trucks delivering chemicals were not adequately identified and addressed in the work planning documents. This included the over pressurization of a chemical tanker truck, which caused a pressure relief value to lift. The work package was modified to address this hazard (Section 3.2.3).
- Issues with fall protection for the chemical delivery truck operators were identified. Fall protection training and use of a rolling ladder to allow access to the top of these trucks provided adequate responses to address the issues of inadequate fall protection.
- One bug bite was reported and treated with appropriate first aid measures. This hazard was adequately addressed and identified in the work planning documents.

3.2.3 Work Packages and Hazard Control

The objective of this core function is to develop and implement work control documents that implement hazard controls tailored to the type of work being conducted. The following findings were identified during the Stage B post-job review meetings:

- Controls were required to be added to the work packages to prevent over pressurization of the tanker trucks delivering chemicals.
- More rigorous controls of the sampling manifold station were added to the work package to independently verify that sample pumps are turned off at the end of a work evolution.

3.2.4 Work Processes and Execution

Objectives of this core function are to implement work processes and safety controls, confirm readiness before starting work, and perform work within the controls (e.g., procedures, pre-job briefings, lockout/tagout, and stop work authority), when needed. The following findings were identified during Stage B post-job review meetings:

- More rigorous testing and verification of flow meter samples at the skids should be performed.
- Electrical problems with the ERT persisted as a result of removing the uninterruptible power supply and splitting the loads.
- Configurations management issues were identified with breakers, six and nine pack filter banks, and the eighth chemical storage tank. These elements all required the following temporary changes to the work processes:

  - Issues with the breakers arose due to tubing lengths and routes to wells, incompatibilities with single-phase pumps being run with three-phase AFDs, location of well screens in low transmissivity formations, and improperly placed pumps (Section 2.7.1.2). The remedy chosen by the Design Authority was to install an On/Off switch for the pumps and to remove some wells from the sampling manifold system.
  - Suspect or counterfeit bolts were discovered in use on the six and nine pack filter banks during CAT testing, Section 2.3.3. A stop work was issued to address this and the counterfeit parts were replaced with the required parts.
  - The eighth chemical storage tank was known to leak and was administratively and mechanically disconnected from the system, Section 2.5.1.
- A stop work order was used when a chemical tanker truck became over pressurized and a pressure relief valve was lifted.
- The following positive items were identified during the post-job review:
  - Color-coded hoses unique to each injection zone worked extremely well.
  - Verification of the startup valve line-up each morning was useful and prevented potential problems.
  - Detailed system operation explanations during the job hazard analyses and having operations heavily involved during the CAT familiarized personnel working with the equipment. This activity saved time and labor from potentially delaying operations.
  - Incorporation of Stage A lessons learned were well integrated into Stage B and reduced labor requirements for operations.

3.2.5 Feedback

The objective of this core function is continual improvement through feedback processes to ensure that operating experience and lessons learned are applied to current and future work. The following findings and recommendations were identified during the post-job review and project scientist review of the Stage B system:

- During injection of the polyphosphate solution it was determined that the polyphosphate solution would begin to precipitate at temperatures below 3-4°C (37-39°F). It is recommended that future injections using polyphosphate solutions implement heat traces on the skids and tank lines to monitor this or move the injection schedule so that it occurs during August.
- All instruments in the totalizer panel should be replaced with high visibility versions.
- Alternative soil moisture collection systems should be considered for PRZ wells for future vadose zone injections and groundwater sampling.

This page intentionally left blank.

4 References

Comprehensive Environmental Response, Compensation, and Liability Act of 1980, Pub. L. 107-377, as amended, 42 USC 9601, et seq., December 31, 2002. Available at: https://www.csu.edu/cerc/researchreports/documents/CERCLASummary1980.pdf.

DOE/RL-2010-29, 2010, *Design Optimization Study for Apatite Permeable Reactive Barrier Extension for the 100-NR-2 Operable Unit*, Rev. 0, U.S. Department of Energy, Richland Operations Office, Richland, Washington. Available at: http://pdw.hanford.gov/arpir/index.cfm/viewDoc?accession=1010051004.

DOE/RL-2014-13-ADD2, 2015, *Remedial Design Report/Remedial Action Work Plan Addendum for the 300 Area Groundwater*, Rev. 0, U.S. Department of Energy, Richland Operations Office, Richland, Washington. Available at: http://pdw.hanford.gov/arpir/index.cfm/viewDoc?accession=0081151H.

DOE/RL-2014-42, 2015, *300-FF-5 Operable Unit Remedy Implementation Sampling and Analysis Plan*, Rev. 0, U.S. Department of Energy, Richland Operations Office, Richland, Washington. Available at: http://pdw.hanford.gov/arpir/index.cfm/viewDoc?accession=0079669H.

DOE/RL-2014-42-ADD1, 2016, *300-FF-5 Operable Unit Remedy Implementation Sampling and Analysis Plan Addendum for Stage B Uranium Sequestration*, Rev. 0, U.S. Department of Energy, Richland Operations Office, Richland, Washington. Available at: https://pdw.hanford.gov/arpir/index.cfm/viewDoc?accession=0071642H.

Endangered Species Act of 1973, Pub. L. 93-205, as amended, 16 USC 1531, et seq. Available at: https://www.gpo.gov/fdsys/pkg/STATUTE-87/pdf/STATUTE-87-Pg884.pdf.

EPA and DOE, 2013, *Hanford Site 300 Area Record of Decision for 300-FF-2 and 300-FF-5, and Record of Decision Amendment for 300-FF-1*, U.S. Environmental Protection Agency and U.S. Department of Energy, Richland, Washington, Richland, Washington. Available at: http://pdw.hanford.gov/arpir/index.cfm/viewDoc?accession=0087180.

MSA-1502630, 2015, "Ecological and Cultural Clearance for Columbia River Access and Submersible Pumps in the Columbia River for the 300 Area Sequestration Remedial Activities, Hanford Site, Benton Country, Washington (HCRC# 2014-300-004, ECR-2015-303)" (letter to R.M. Hermann, CHPRC, from A.L. Johnson), Mission Support Alliance, Richland, Washington, June 16. Available at: https://pdw.hanford.gov/arpir/index.cfm/viewDoc?accession=0077173H.

NAD83, 1991, *North American Datum of 1983*, as revised, National Geodetic Survey, Federal Geodetic Control Committee, Silver Spring, Maryland. Available at: https://www.ngs.noaa.gov/datums/horizontal/north-american-datum-1983.shtml.

SGW-41618, 2010, *Borehole Summary Report for the Installation of Fifteen Polyphosphate Treatability Test Wells in the 300-FF-5 Operable Unit, FY 2009*, Rev. 0, CH2M HILL Plateau Remediation Company, Richland, Washington. Available at: https://pdw.hanford.gov/arpir/index.cfm/viewDoc?accession=0064113H.

SGW-60243, 2016, *300-FF-5 Operable Unit Stage B Uranium Sequestration Functional Requirements*, Rev. 0, CH2M HILL Plateau Remediation Company, Richland, Washington. Available at: https://pdw.hanford.gov/arpir/index.cfm/viewDoc?accession=0074257H.

SGW-60287, 2016, *Description of Work for the Installation of Forty Eight Injection Wells and Nineteen Monitoring Wells in the 300-FF-5 Groundwater Operable Unit, FY17*, Rev. 0, CH2M HILL Plateau Remediation Company, Richland, Washington. Available at: https://pdw.hanford.gov/arpir/index.cfm/viewDoc?accession=0064954H.

SGW-61092, 2017, *Borehole Summary Report for the Installation of Forty Eight Injection wells and Nineteen Monitoring Wells at the 300-FF-5 Operabl*e *Unit, FY 2017*, Rev. 0, CH2M HILL Plateau Remediation Company, Richland, Washington. Available at: https://pdw.hanford.gov/arpir/index.cfm/viewDoc?accession=0064960H.

USFWS, 2015, Letter from USFWS, Wenatchee, WA to DOE-Richland Operation Office, Richland, WA. May 5, 2015. USFWS Reference 01EWFW00-2015-I-0567.

WAC 173-160, "Minimum Standards for Construction and Maintenance of Wells," *Washington Administrative Code*, Olympia, Washington. Available at: http://apps.leg.wa.gov/WAC/default.aspx?cite=173-160.

WCR-2015-2480, 2014, "Endangered Species Act Section 7(a)(2) Concurrence Letter for Installation and Operations of a Uranium Sequestration Groundwater treatment System near the Shoreline of the Columbia River at the 300 Area of the Hanford Site, Benton Country, Washington (HUC 170200160602) City of Richland-Columbia River" (letter to K. Flynn, U.S. Department of Energy, Richland, Washington from W.W. Stelle, Jr.), National Marine Fisheries Service, U.S. Department of Commerce, Seattle, Washington, June 9. Available at: https://pdw.hanford.gov/arpir/index.cfm/viewDoc?accession=0077174H.

Appendix A

Site Layout Plans and Equipment Design Sheets

This page intentionally left blank.

Contents

300 Area Chemical Injection Site B Civil Layout (ECR-16-001223)..... A-1

300 Area FF-5 Chemical Injection and Monitoring Well Sample System for Site B (ECR-18-001444) A-13

This page intentionally left blank.

300 Area Chemical Injection Site B Civil Layout

(ECR-16-001223)

This page intentionally left blank.

CHPRC ENGINEERING CHANGE REQUEST/FACILITY MODIFICATION PACKAGE (ECR/FMP)

ECR No: ECR-16-001223

ECR/FMP Title: 300 AREA CHEMICAL INJECTION SITE B CIVIL LAYOUT

1.0 MODIFICATION DESCRIPTION

Request and Justification:
Provide a chemical injection system to be used in the 300 Area Industrial Complex, Site B, to sequester the uranium for the remediation of ground water per SGW-60243, 300-FF-5 Operable Unit Stage B Uranium Sequestration Functional Requirements. This ECR provides only the civil layout to allow early civil work and placement of trailer to support construction.
9R 12/6/16

RELEASE ☐ Radiological Record

DATE: Dec 08, 2016 HANFORD RELEASE

Work Package No./ Project No.:
GW-16-6064

Area:	Facility:	Building:	System ID:
300	N/A	N/A	GRW-MISC GRW-OPS-APAT

☐ Work Complete
☐ Not Approved/Archive Only

RW Whitlock — Design Authority: Print Name | Signature | Date

Change Description and Scope:

- Pump water out of the river using two submersible pumps. (future) 9R 12/6/16
- Pump water to two remediation skids that were previously designed and used on the apatite injection project. (future) 12/6/16
- Pump phosphate solution from chemical tanks to remediation skids to be mixed with river water. (future) 12/6/16
- Minor changes to existing chemical injection skids. (future) 12/6/16

2.0 PACKAGE INDEX

Action	Document No.	Rev. No.	E/S/R	FMP Section Description	FMP Page No.	Release to Work?
RWC	H-3-317678 001	0	S	CHEMICAL INJECTION SYSTEM CIVIL SITE PLAN	4/5	Yes
RWC	H-3-317679 001	0	S	CHEMICAL INJECTION SYSTEM CIVIL ENLARGED SITE PLAN	6/7	Yes
RWC	H-3-317680 001	0	S	CHEMICAL INJECTION SYSTEM CIVIL ENLARGED SITE PLAN	8/9	Yes
N	SGW-60293	0	R	300-FF-5 PART B PUMP CALCULATION	—	Yes

3.0 DESIGN REQUIREMENTS

Functional Requirements:

- Functional requirements are listed in SGW-60243, 300-FF-5 Operable Unit Stage B Uranium Sequestration Functional Requirements.
- MSA-1604905 (Reissue) Ecological and Cultural Clearance for Columbia River access and submersible pumps in the Columbia River for the 300 Area Sequestration remedial activities.

Design Criteria:

- SGW-60243.

Hazard Analysis/Requirements:
The only hazards associated with the products are contact/dermal. PPE will be required and listed in the Operation procedure.

Other Analysis/Requirements:
SGW-48737 Apatite Injection System Civil/Structural Calculations
SGW-57336 Apatite Tank Tie-Down Analysis
SGW-48737 Apatite Injection System Civil/Structural Calculations

CHPRC ENGINEERING CHANGE REQUEST/FACILITY MODIFICATION PACKAGE (ECR/FMP)

ECR No: ECR-16-001223
ECR/FMP Title: 300 AREA CHEMICAL INJECTION SITE B CIVIL LAYOUT

4.0 ACCEPTANCE CRITERIA and METHODS

Acceptance Criteria	Acceptance Method
None Required	☐ Inspection ☐ Testing

5.0 AFFECTED and RELATED ECR/FMPs

Action	ECR/FMP No.	ECR/FMP Title
	NONE SLR 12/8/16	

6.0 OTHER AFFECTED DOCUMENTS

Document Type	Document No.	Rev. No.	Owning Organization	Technical Authority
Operations Procedure	SGRP-PRO-OP-53038	0	SGRP Operations	E. Bertrand

7.0 DESIGN VERIFICATION

Verification by: ☒ Peer Review ☐ Formal Design Review ☐ Alternate Calculations ☐ Qualification Testing ☐ Not Required

Design Verification Checklist:

a.	Are the Functional Requirements and Design Criteria appropriately selected for the modification?	☒ Yes	☐ No	☐ NA
b.	Does the design meet the specified Functional Requirements and Design Criteria?	☒ Yes	☐ No	☐ NA
c.	Were the design inputs correctly incorporated into the design?	☒ Yes	☐ No	☐ NA
d.	Is the design output reasonable compared to the design inputs?	☒ Yes	☐ No	☐ NA
e.	Have suitable materials, parts, and processes been specified?	☐ Yes	☐ No	☒ NA
f.	Have suitable acceptance, inspection, and testing criteria been specified?	☐ Yes	☐ No	☒ NA
g.	Have constructability, maintenance, and operability been adequately addressed in the design?	☐ Yes	☐ No	☒ NA
h.	Are all affected design documents identifies and appropriately changed?	☐ Yes	☒ No	☐ NA

Additional Design Verification Documentation Prepared? ☐ Yes ☐ No
NOTE: Identify additional Design Verification Documentation in Section 2.0 Package Index.

A review of the design has been performed. The selected Functional Requirements and Design Criteria meet the stated Engineering Request. Design Verification performed by the method(s) identified has confirmed that the design documented by this FMP is adequate and meets the stated Functional Requirements and Design Criteria

KA Hedquist — **Design Verifier:** Print Name | Signature | 12/6/16 Date

8.0 REVIEWS

USQ: _____ ☐ USQ ☐ GCX No.: _____ ☒ Not Required

Jeff Riddelle — **Reviewer:** Print Name | Signature | 12/8/16 Date

Environmental: EASF ☒ Screened Ref: 7-10-15 ☐ Not Required

RW Oldham — **ECO:** Print Name | Signature | 12.6.16 Date

A-6004-683 (REV 7)

CHPRC ENGINEERING CHANGE REQUEST/FACILITY MODIFICATION PACKAGE (ECR/FMP)

ECR No: ECR-16-001223

ECR/FMP Title: 300 AREA CHEMICAL INJECTION SITE B CIVIL LAYOUT

9.0 APPROVALS and DISTRIBUTION

Approvals

	Print Name	Signature	Date
ECR/FMP Author:	DL Deaton per email for	RWhitlock	12/6/16
Design Authority:	RW Whitlock	RWhitlock	12/5/16
Engineering Manager:	JG Riddelle	Jeff Riddelle	
Project Lead:	PA Baynes	Patrick A Baynes	12/5/16
Operations:	PJ Sheely	Philip Sheely	12/5/2016
Fire Protection:	LE Anderlini Approved per email dated 12/7/16	Jeff Riddelle for L. Anderlini	12/7/16
Safety:	EM Baldwin	[illegible]	12/5/16
Industrial Hygiene:	JA Herber	[illegible]	12/7/16
Civil Design Authority:	RG Hollenbeck per email for	RWhitlock	12/5/16

Distribution

HID	Name	HID	Name
H5767788	DL Deaton	H0072915	PA Baynes
H0038443	JG Riddelle	H0511610	JA Herber
H6926136	AR HaWaaboo	H3464477	EP Bertrand
H8293029	CJ Ayres	H0032654	LE Anderlini
H0091888	KA Hedquist	H5540866	JC Cook
H0083398	RW Whitlock	H0072523	PJ Sheely
H0004025	RG Hollenbeck	H6265451	RM Hermann
H0005843	GB Chronister	H7104115	BM Cunningham

This page intentionally left blank.

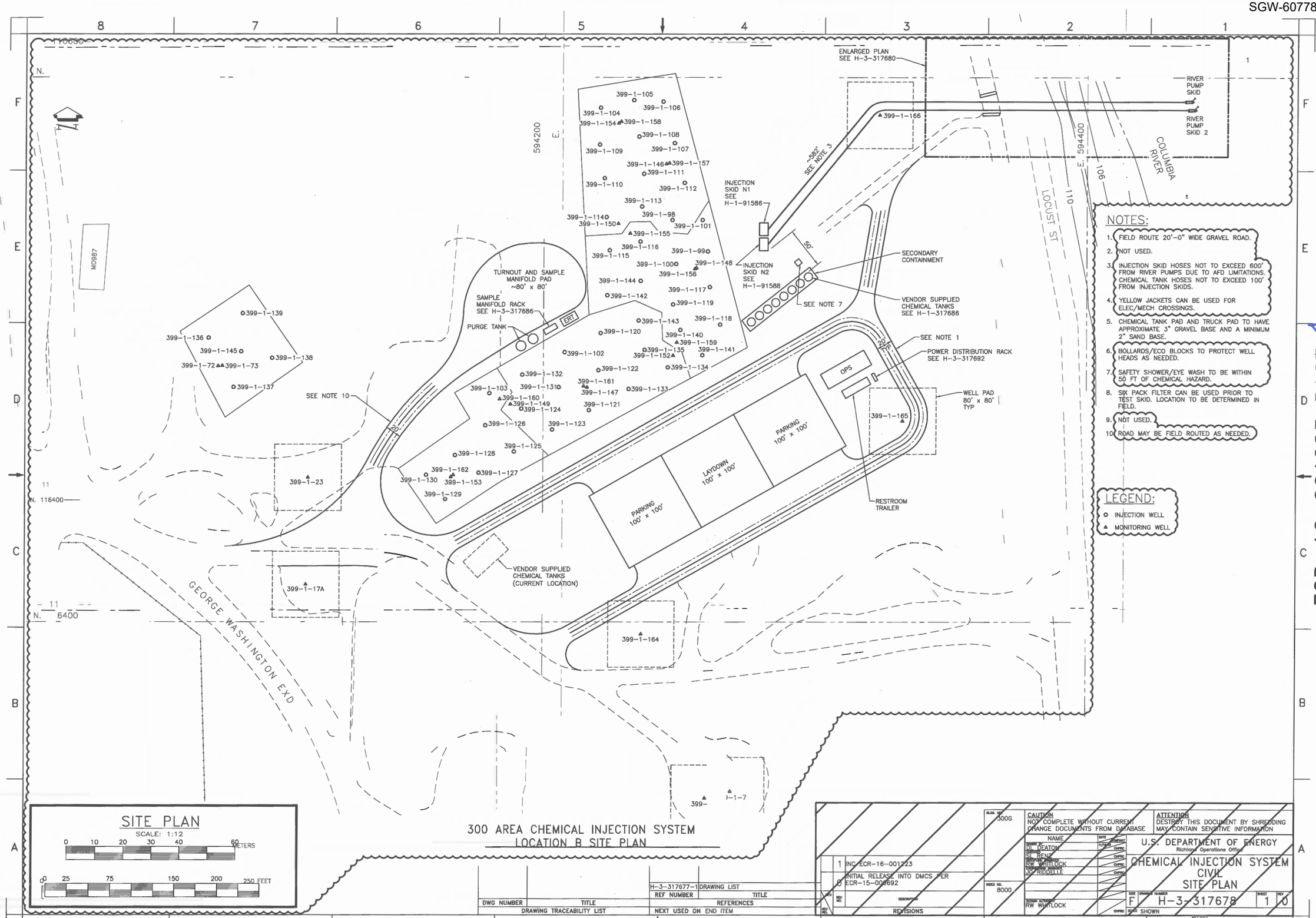

NOTES:

1. FIELD ROUTE 20'-0" WIDE GRAVEL ROAD.
2. NOT USED.
3. INJECTION SKID HOSES NOT TO EXCEED 600' FROM RIVER PUMPS DUE TO AFD LIMITATIONS. CHEMICAL TANK HOSES NOT TO EXCEED 100' FROM INJECTION SKIDS.
4. YELLOW JACKETS CAN BE USED FOR ELEC/MECH CROSSINGS.
5. CHEMICAL TANK PAD AND TRUCK PAD TO HAVE APPROXIMATE 3" GRAVEL BASE AND A MINIMUM 2" SAND BASE.
6. BOLLARDS/ECO BLOCKS TO PROTECT WELL HEADS AS NEEDED.
7. SAFETY SHOWER/EYE WASH TO BE WITHIN 50 FT OF CHEMICAL HAZARD.
8. SIX PACK FILTER CAN BE USED PRIOR TO TEST SKID. LOCATION TO BE DETERMINED IN FIELD.
9. NOT USED.
10. ROAD MAY BE FIELD ROUTED AS NEEDED.

SITE PLAN

SCALE: 1:12

0 10 20 30 40 60 METERS

0 25 75 150 200 250 FEET

300 AREA CHEMICAL INJECTION SYSTEM
LOCATION B SITE PLAN

DWG NUMBER	TITLE
DRAWING TRACEABILITY LIST	

REF NUMBER	TITLE
H-3-317677-1	DRAWING LIST
REFERENCES	
NEXT USED ON END ITEM	

REV NO.	DESCRIPTION
1	INC ECR-16-001223
0	INITIAL RELEASE INTO DMCS PER ECR-15-000692
REVISIONS	

BLDG. NO. 300G

INDEX NO. 8000

CAUTION
NOT COMPLETE WITHOUT CURRENT CHANGE DOCUMENTS FROM DATABASE

ATTENTION
DESTROY THIS DOCUMENT BY SHREDDING MAY CONTAIN SENSITIVE INFORMATION

NAME	DATE	ROUTING
DRAWN BY NJ DEATON		TUTNER
SR ENGR SE BENZ		CHRNG
ENGR RW WHITLOCK		CHRNG
NG RIDDELLE		CHRNG
DESIGN AUTHORITY RW WHITLOCK		CHRNG

U.S. DEPARTMENT OF ENERGY
Richland Operations Office

CHEMICAL INJECTION SYSTEM
CIVIL
SITE PLAN

SIZE F | DRAWING NUMBER H-3-317678 | SHEET 1 | REV 0

SCALE SHOWN

PLOTTED

DOE_TB_F.DWG (JAN 2012)

ECR-16-001223 PAGE 4

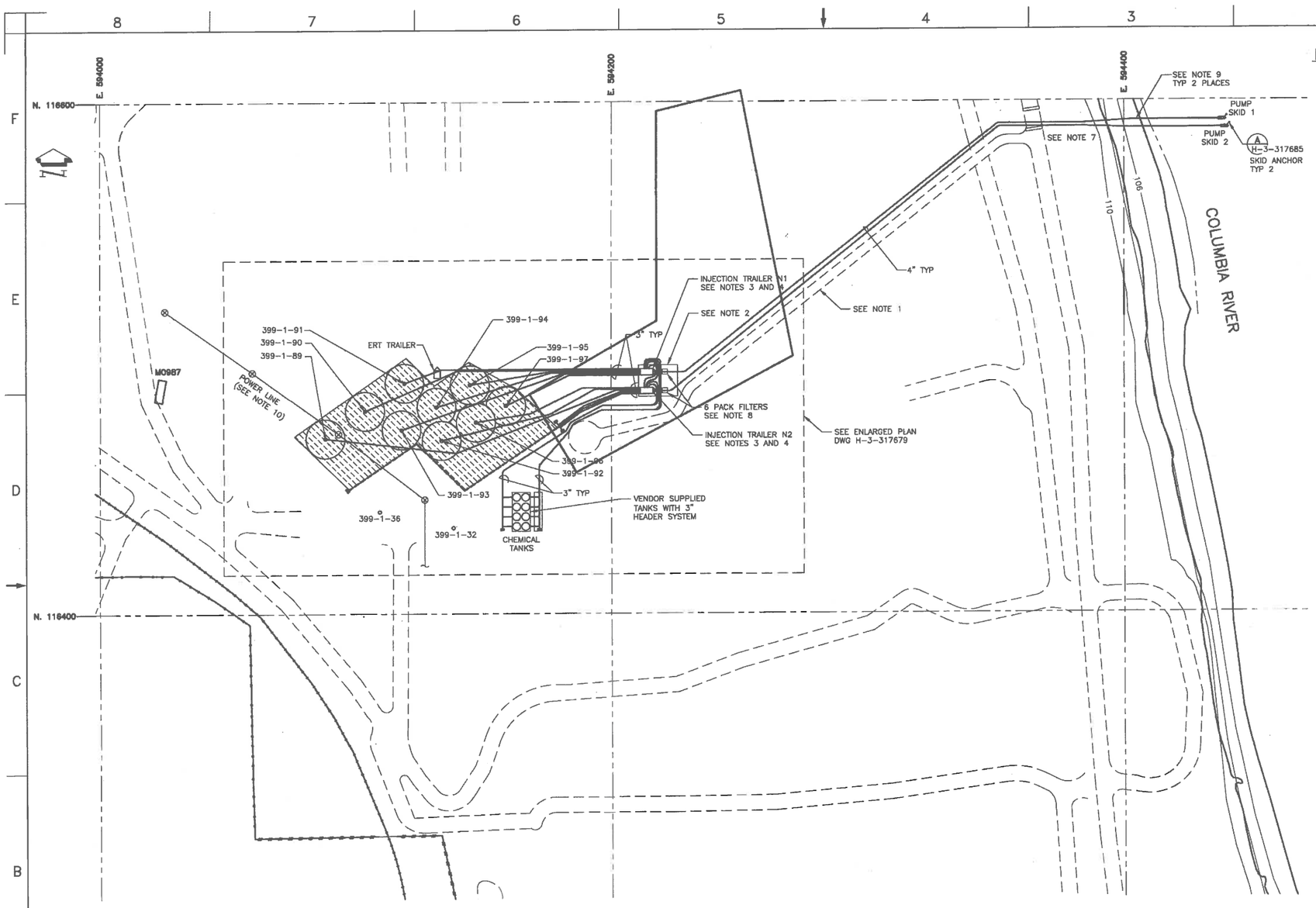

NOTES:

1. ADD 12'-0" WIDE GRAVEL ROAD FROM CORNER OF TREATMENT AREA TO RIVER ROAD.
2. ADD 40'x50' PAD FOR SKIDS, GENERATORS, 6 PACK FILTERS, AND DISCONNECTS TO TO BE PLACED UPON.
3. SKIDS CANNOT EXCEED 850' FROM RIVER PUMPS DUE TO AFD LIMITATIONS. CHEMICAL TANKS NOT TO EXCEED 400' FROM SKIDS.
4. BOTH TRAILERS CAN BE USED FOR INJECTION WELLS. CONFIGURE PIPING AS NEEDED.
5. CHEMICAL TANK PAD AND TRUCK PAD TO HAVE APPROXIMATE 3" GRAVEL BASE AND A MINIMUM 2" SAND BASE.
6. ALL SHOWN PIPE ROUTES ARE GENERAL LAYOUT, ACTUAL PIPE ROUTES MAY VARY. PIPE NEED TO STAY AS CLOSE AS POSSIBLE TO SAME LENGTHS.
7. TEMPORARY ROAD CLOSURE (BLOCKADE).
8. SIX PACK FILTER CAN BE USED PRIOR TO TEST SKID. LOCATION TO BE DETERMINED IN FIELD.
9. ECO BLOCK TO BE PLACED ON SHORE TO ASSIST IN ANCHORING OF RIVER PUMP SKID IF NEEDED.
10. OVERHEAD POWER LINE MAY BE REMOVED AND REPLACED WITH TYPE W CABLE (BY OTHERS).

300 AREA CHEMICAL INJECTION SYSTEM ENLARGED SITE PLAN

SCALE: 1:16

WAS CONDITION ECR-16-001223 PAGE 5

NOV 0 9 2016 DATE: ETA. 851 HANFORD RELEASE ID: 33

SITE PLAN

SCALE: 1:16

0 10 20 30 40 60 80 METERS

0 25 75 150 200 250 300 350 FEET

DWG NUMBER	TITLE
H-3-317677-1	DRAWING LIST

DRAWING TRACEABILITY LIST

REF NUMBER	TITLE
	REFERENCES
NEXT USED ON END ITEM	

REV NO	DESCRIPTION
RS 0	INITIAL RELEASE INTO DMCS PER ECR-15-000692

REVISIONS

BLDG. NO. 300G

INDEX NO. 8000

CAUTION NOT COMPLETE WITHOUT CURRENT CHANGE DOCUMENTS FROM DATABASE

ATTENTION DESTROY THIS DOCUMENT BY SHREDDING MAY CONTAIN SENSITIVE INFORMATION

	NAME	DATE
DRAWN BY	RW BROWN	10/20/16
DESIGNED	SL RENZ	11/8/16
DESIGN VERIFICATION	RW WHITLOCK	11-8-16
	JG RIDDELLE	11-8-16
DESIGN AUTHORITY	RW WHITLOCK	11-8-16

U.S. DEPARTMENT OF ENERGY
Richland Operations Office

CHEMICAL INJECTION SYSTEM
CIVIL
SITE PLAN

SIZE F | DRAWING NUMBER H-3-317678 | SHEET 1 | REV 0

SCALE SHOWN

24810

DOE_TS_F2ND (AN: 3015)

THIS SHEET INTENTIONALLY LEFT BLANK

INFORMATION REMOVED
NOT REQUIRED FOR SITE B

ECR-16-001223 PAGE 6

DWG NUMBER	TITLE
H-3-317677-1	DRAWING LIST

DRAWING TRACEABILITY LIST

REF NUMBER	TITLE

REFERENCES

NEXT USED ON END ITEM

REV NO.	DESCRIPTION
1	INC ECR-16-001223
0	INITIAL RELEASE INTO DMCS PER ECR-15-000692

REVISIONS

BLDG. NO. 300G

INDEX NO. 8000

CAUTION
NOT COMPLETE WITHOUT CURRENT CHANGE DOCUMENTS FROM DATABASE

ATTENTION
DESTROY THIS DOCUMENT BY SHREDDING
MAY CONTAIN SENSITIVE INFORMATION

	NAME	DATE	
DRAWN BY	DJ DEATON	11/20/15	COMPANY
REV. BY	RW WHITLOCK		CHPRC
APPR. BY	RW WHITLOCK		CHPRC
CHECKED BY	NC RIDDELLE		CHPRC
DESIGN AUTHORITY	RW WHITLOCK		CHPRC

U.S. DEPARTMENT OF ENERGY
Richland Operations Office

CHEMICAL INJECTION SYSTEM
CIVIL
ENLARGED SITE PLAN

SIZE F | DRAWING NUMBER H-3-317679 | SHEET 1 | REV 0

SCALE AS SHOWN

PLOTID

DOE_TB_F.DWG (JAN 2012)

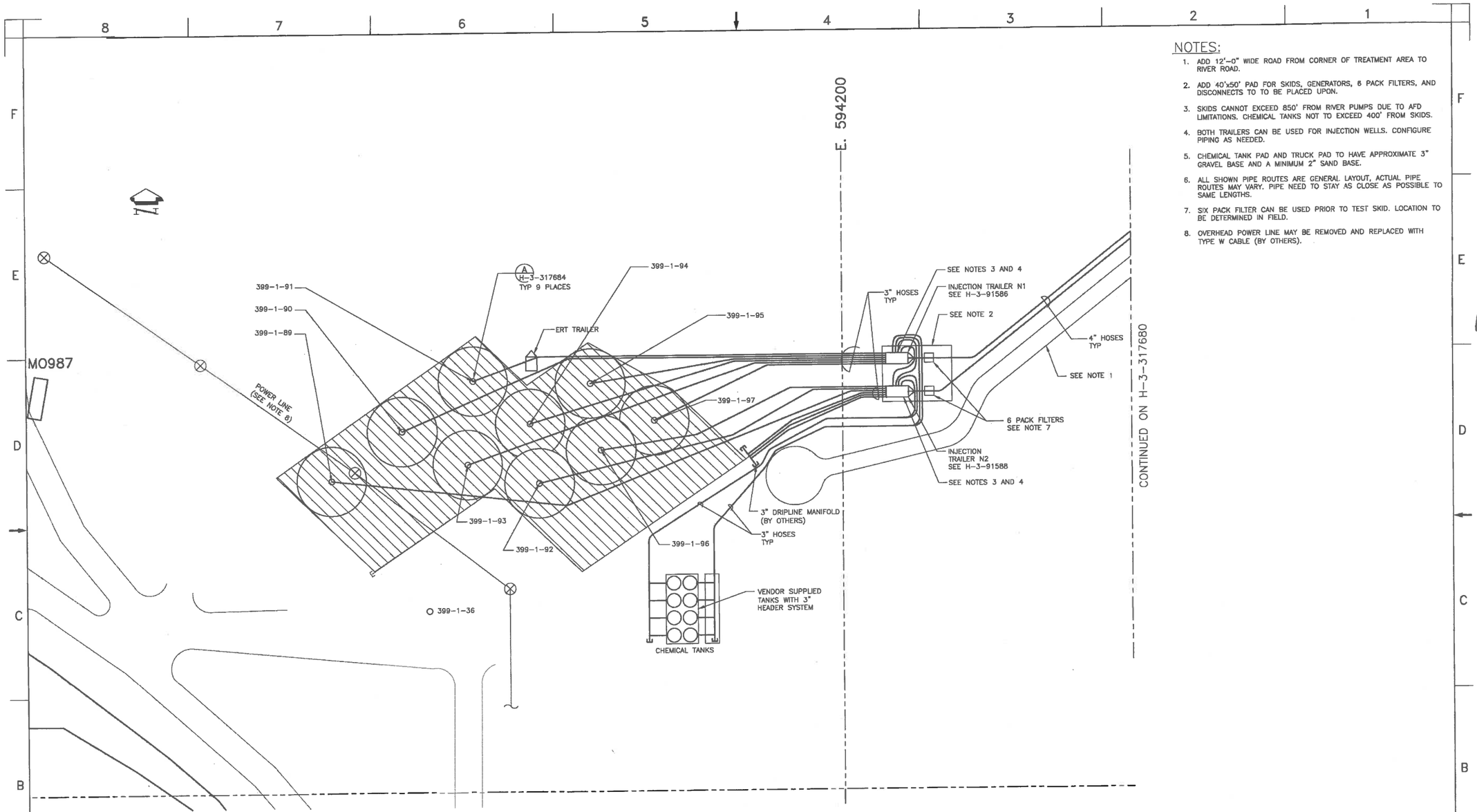

NOTES:

1. ADD 12'-0" WIDE ROAD FROM CORNER OF TREATMENT AREA TO RIVER ROAD.
2. ADD 40'x50' PAD FOR SKIDS, GENERATORS, 6 PACK FILTERS, AND DISCONNECTS TO TO BE PLACED UPON.
3. SKIDS CANNOT EXCEED 850' FROM RIVER PUMPS DUE TO AFD LIMITATIONS. CHEMICAL TANKS NOT TO EXCEED 400' FROM SKIDS.
4. BOTH TRAILERS CAN BE USED FOR INJECTION WELLS. CONFIGURE PIPING AS NEEDED.
5. CHEMICAL TANK PAD AND TRUCK PAD TO HAVE APPROXIMATE 3" GRAVEL BASE AND A MINIMUM 2" SAND BASE.
6. ALL SHOWN PIPE ROUTES ARE GENERAL LAYOUT, ACTUAL PIPE ROUTES MAY VARY. PIPE NEED TO STAY AS CLOSE AS POSSIBLE TO SAME LENGTHS.
7. SIX PACK FILTER CAN BE USED PRIOR TO TEST SKID. LOCATION TO BE DETERMINED IN FIELD.
8. OVERHEAD POWER LINE MAY BE REMOVED AND REPLACED WITH TYPE W CABLE (BY OTHERS).

300 AREA CHEMICAL INJECTION SYSTEM ENLARGED SITE PLAN
SCALE: 1:8

WAS CONDITION ECR-16-001223 PAGE 7

NOV 0 9 2016 DATE: STA: 851 HANFORD RELEASE ID: 33

DWG NUMBER	TITLE
DRAWING TRACEABILITY LIST	

REF NUMBER	TITLE
H-3-317677-1	DRAWING LIST
REFERENCES	
NEXT USED ON END ITEM	

REV NO.	DESCRIPTION
RS 0	INITIAL RELEASE INTO DMCS PER ECR-15-000692
REVISIONS	

BLDG. NO. 300G
INDEX NO. 8000

CAUTION
NOT COMPLETE WITHOUT CURRENT CHANGE DOCUMENTS FROM DATABASE

ATTENTION
DESTROY THIS DOCUMENT BY SHREDDING MAY CONTAIN SENSITIVE INFORMATION

NAME	DATE	COMPANY
DRAWN BY BW BROWN	10/19/16	CHPRC
CHECKED SL RENZ	10/21/16	CHPRC
DESIGN VERIFIER BW WHITLOCK	11-2-16	CHPRC
DESIGN AUTHORITY JG RIDDELLE	11-2-16	CHPRC
DESIGN AUTHORITY RW WHITLOCK	11-2-16	CHPRC

U.S. DEPARTMENT OF ENERGY
Richland Operations Office

CHEMICAL INJECTION SYSTEM
CIVIL
ENLARGED SITE PLAN

SIZE F | DRAWING NUMBER H-3-317679 | SHEET 1 | REV 0
SCALE AS SHOWN
16177

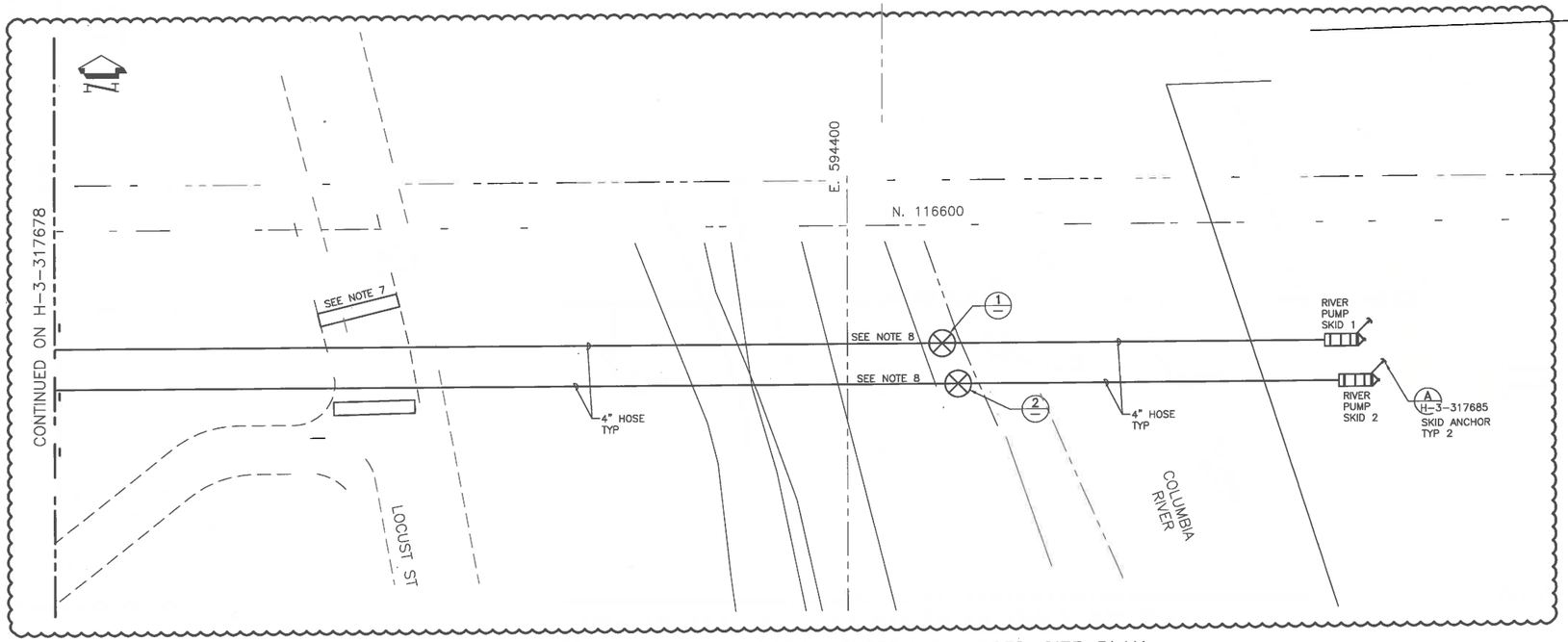

300 AREA CHEMICAL INJECTION SYSTEM ENLARGED SITE PLAN
SCALE: 1:4

NOTES:

1. NOT USED.
2. NOT USED.
3. NOT USED.
4. NOT USED.
5. NOT USED.
6. NOT USED.
7. TEMPORARY ROAD CLOSURE (BLOCKADE) IF REQUIRED.
8. ECOLOGY BLOCK(S) TO BE PLACED ON SHORE TO ASSIST IN ANCHORING OF RIVER PUMP SKID IF NEEDED.
9. VALVES TO BE OPENED TO DRAIN RIVER WATER FROM HOSE.

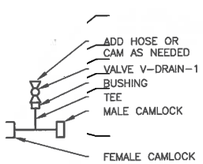

1 DETAIL
SCALE: 1:4
SEE NOTE 9

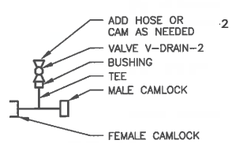

2 DETAIL
SCALE: 1:4
SEE NOTE 9

DWG NUMBER	TITLE
DRAWING TRACEABILITY LIST	

H-3-317677-1	DRAWING LIST
REF NUMBER	TITLE
REFERENCES	
NEXT USED ON END ITEM	

REV NO.	REV DEL.	DESCRIPTION
1	INC ECR-16-001223	
0	INITIAL RELEASE INTO DMCS PER ECR-15-000692	

REVISIONS

BLDG. NO. 300G

INDEX NO. 8000

CAUTION
NOT COMPLETE WITHOUT CURRENT CHANGE DOCUMENTS FROM DATABASE

ATTENTION
DESTROY THIS DOCUMENT BY SHREDDING MAY CONTAIN SENSITIVE INFORMATION

	NAME	DATE	COMPANY
DRAWN BY	DL DEATON		CHPRC
DES	RW WHITLOCK		CHPRC
DWN REVIEWER	RW WHITLOCK		CHPRC
DES REVIEWER	RW WHITLOCK		CHPRC
IC	JC RIDDELLE		CHPRC
DESIGN AUTHORITY	RW WHITLOCK		CHPRC

U.S. DEPARTMENT OF ENERGY
Richland Operations Office

CHEMICAL INJECTION SYSTEM
CIVIL
ENLARGED SITE PLAN

SIZE	DRAWING NUMBER	SHEET	REV
F	H-3-317680	1	0

SCALE AS SHOWN

PLOTID

DOE_TB_F.DWG (JAN 2012)

ECR-16-001223 PAGE 8

NOTES:

1. ADD 12'-0" WIDE ROAD FROM CORNER OF TREATMENT AREA TO RIVER ROAD.
2. ADD 40'x50' PAD FOR SKIDS, GENERATORS, 6 PACK FILTERS, AND DISCONNECTS TO TO BE PLACED UPON.
3. SKIDS CANNOT EXCEED 850' FROM RIVER PUMPS DUE TO AFD LIMITATIONS. CHEMICAL TANKS NOT TO EXCEED 400' FROM SKIDS.
4. BOTH TRAILERS CAN BE USED FOR INJECTION WELLS. CONFIGURE PIPING AS NEEDED.
5. CHEMICAL TANK PAD AND TRUCK PAD TO HAVE APPROXIMATE 3" GRAVEL BASE AND A MINIMUM 2" SAND BASE.
6. ALL SHOWN PIPE ROUTES ARE GENERAL LAYOUT, ACTUAL PIPE ROUTES MAY VARY. PIPE NEED TO STAY AS CLOSE AS POSSIBLE TO SAME LENGTHS.
7. TEMPORARY ROAD CLOSURE (BLOCKADE).
8. ECO BLOCK TO BE PLACED ON SHORE TO ASSIST IN ANCHORING OF RIVER PUMP SKID IF NEEDED.

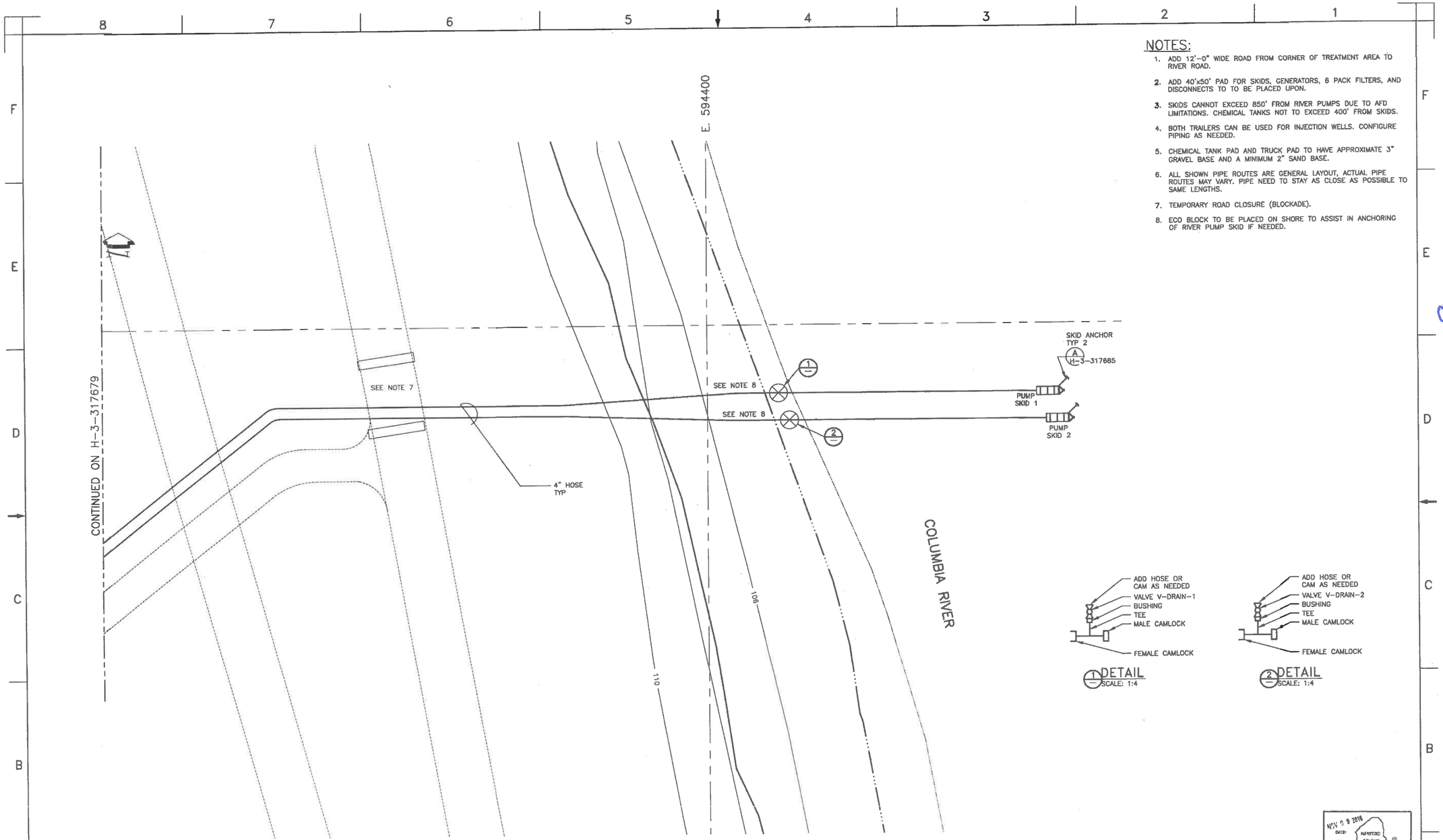

300 AREA CHEMICAL INJECTION SYSTEM ENLARGED SITE PLAN
SCALE: 1:4

DWG NUMBER	TITLE
	DRAWING TRACEABILITY LIST

REF NUMBER	TITLE
H-3-317677-1	DRAWING LIST
	REFERENCES
	NEXT USED ON END ITEM

REV NO.	DESCRIPTION
0	INITIAL RELEASE INTO DMCS PER ECR-15-000692
	REVISIONS

BLDG. NO. 300G

BADGE NO. 8000

CAUTION
NOT COMPLETE WITHOUT CURRENT CHANGE DOCUMENTS FROM DATABASE

ATTENTION
DESTROY THIS DOCUMENT BY SHREDDING MAY CONTAIN SENSITIVE INFORMATION

	NAME		
DRAWN BY	HW BROWN	10/31/16	CHKRD
DESIGNED	SL BENZ		CHKRD
	RW WHITLOCK	11/16/16	CHKRD
	JG RIDDELLE	11/16/16	CHKRD
DRAWING ACCEPTED	RW WHITLOCK	11-17-16	CHKRD

U.S. DEPARTMENT OF ENERGY
Richland Operations Office

CHEMICAL INJECTION SYSTEM
CIVIL
ENLARGED SITE PLAN

SIZE	DRAWING NUMBER	SHEET	REV
F	H-3-317680	1	0

SCALE AS SHOWN

30858

DOE_TB_F.DWG (JAN 2010)

WAS CONDITION ECR-16-001223 PAGE 9

300 Area FF-5 Chemical Injection and Monitoring Well Sample System for Site B

(ECR-18-001444)

This page intentionally left blank.

CHPRC ENGINEERING CHANGE REQUEST/FACILITY MODIFICATION PACKAGE (ECR/FMP)

ECR No: ECR-18-001444

ECR/FMP Title: 300-FF-5 Chemical Injection & Monitoring Well Sample System for Site B

1.0 MODIFICATION DESCRIPTION

Request and Justification:
Upon completion of construction of the 300-FF-5 project, all redlines require being combined into one document, to cover both the installation of an chemical injection system in the 300 area site B and a 24 port well sampling system previously identified in FMPs ECR-18-000692, ECR-16-001471 & ECR-17-000112.
Site B is to sequester the uranium for the remediation of ground water per SGW-60243, 300-ff-5 Operable Unit Stage B Uranium Sequestration functional requirements. Sample station is needed to facilitate timely daily sampling after injection process.

Work Package No./ Project No.:
GW-17-1898 / 2145 (CAT)

Area:	Facility:	Building:	System ID:
300	N/A	N/A	GRW-MISC GRW-OPS-APAT

RELEASE ☐ Radiological Record

DATE: Aug 28, 2018 HANFORD RELEASE

Aug 30, 2018 35

☒ Work Complete
☐ Not Approved/Archive Only

CJ Ayres — Design Authority: Print Name — Signature — 8/29/18 Date

Change Description and Scope:
The purpose of this FMP is to install the 300 Area, Site B Chemical Injection System which includes; (48) injection wells, (8) chemical tanks, tank inlet and outlet piping, (2) injection skids, and (3) river pump skids. In addition, Type W cables shall be routed from the Power Distribution Rack to each Chemical Injection Skid (N1 & N2) and from each River Pump Skid (#1, #2 & #3) to each Chemical Injection Skid (N1 & N2). Locations for Electrical/Mechanical Road Crossings will be identified on the plans. Air vents shall be installed on each Chemical Injection Skid (N1 & N2). A Safety Shower/Eyewash to be installed near the Chemical Tanks. Construct a valve manifold to as a sample station for 24 wells, 2 holding tanks and associated equipment.

This FMP supersedes ECR-16-001471 & ECR-17-000112, ecr-18-000692 in their entirety.

- Install Chemical Injection Skid N1 & N2 and assemble (Grounding, Lights, and Disconnect Rack Mods).
- Install Chemical Tank Inlet & Outlet Piping.
- Prepare Injection Wells with downhole piping, packers, landing plates, packer air tubing, and above grade fittings.
- Route hoses from River Pump Skids to Injection Skids.
- Route hoses from Injection Skids to Chemical Tanks.
- Route hoses from Injection Skids to Injection Wells.
- Install Road Crossings.
- Route 1" tubing and type W cable to each well from sample manifold rack.
- Each sampling well will have a pump and monitoring instrumentation.
- All the pumps will be controlled by 1 AFD for every 6 pumps, for a total of 4 AFDs and pumps individually protected by breakers located inside the SS-PMP-BRKR-ENCL one for each group.
- Power for well sampling pumps and ERT trailer to be supplied by a disconnect switch at the power distribution rack located near operations trailer.
- Route (1) Type W Cable from the Power Distribution Rack to each Chemical Injection Skid (N1 & N2).
- Route (1) Type W Cable from each River Pump Skid (#1 & #2) to each Chemical Injection Skid (N1 & N2).
- Replace labels on existing equipment.
- Install air vents on Chemical Injection Skid N1 & N2.
- Install Safety Shower/Eyewash.
- Install barricades (ECO blocks) to protect racks.

The following FMPs are shown in the drawing background and may not be work complete:
ECR-16-001223, ECR-16-001457, ECR-17-000853, ECR-17-000875

2.0 PACKAGE INDEX

Action	Document No.	Rev. No.	E/S/R	FMP Section Description	FMP Page No.	Release to Work?
RWC	H-3-317677-001	00	S	CHEMICAL INJECTION SYSTEM DRAWING LIST	6	Yes
RWC	H-3-317678-001	00	S	CHEMICAL INJECTION SYSTEM CIVIL SITE PLAN	7	Yes
RWC	H-3-317680-001	00	S	CHEMICAL INJECTION SYSTEM CIVIL ENLARGED SITE PLAN	8	Yes
NWC	H-3-317681-001	0NEW	S	SAMPLE SYSTEM CIVIL SITE PLAN	9	Yes
NWC	H-3-317681-002	0NEW	S	SAMPLE SYSTEM CIVIL EQUIPMENT LOCATIONS	10	Yes

CHPRC ENGINEERING CHANGE REQUEST/FACILITY MODIFICATION PACKAGE (ECR/FMP)

ECR No: ECR-18-001444

ECR/FMP Title: 300-FF-5 Chemical Injection & Monitoring Well Sample System for Site B

NWC	H-3-317683-001	0NEW	E	SAMPLE SYSTEM STATION P&ID	11	Yes
RWC	H-3-317684-001	00	S	CHEMICAL INJECTION SYSTEM MECHANICAL WELL TABLE	12	Yes
RWC	H-3-317685-001	00	S	CHEMICAL INJECTION SYSTEM MECHANICAL RIVER PUMP SKID DETAIL	13	Yes
NWC	H-3-317686-001	0NEW	S	SAMPLE SYSTEM WELL HEAD DETAILS	14	Yes
NWC	H-3-317686-002	0NEW	S	SAMPLE SYSTEM TK-1 FILL SYSTEM STRUCT	15	Yes
NWC	H-3-317686-003	0NEW	S	SAMPLE SYSTEM TK-1 FILL SYSTEM PIPE	16	Yes
NWC	H-3-317686-004	0NEW	S	SAMPLE SYSTEM TK-2 FILL SYSTEM STRUCT	17	Yes
NWC	H-3-317686-005	0NEW	S	SAMPLE SYSTEM TK-2 FILL SYSTEM PIPE	18	Yes
NWC	H-3-317686-006	0NEW	S	SAMPLE SYSTEM STATION STRUCT	19	Yes
NWC	H-3-317686-007	0NEW	S	SAMPLE SYSTEM STATION PIPE	20	Yes
NWC	H-3-317686-008	0NEW	S	SAMPLE SYSTEM MATERIALS LIST	21	Yes
NWC	H-3-317687-001	0NEW	S	CHEMICAL INJECTION SYSTEM MECHANICAL CHEMICAL TANK PLAN	22	Yes
NWC	H-3-317688-001	0NEW	S	CHEMICAL INJECTION SYSTEM MECHANICAL CHEMICAL TANK DETAILS	23	Yes
NWC	H-3-317689-001	0NEW	S	CHEMICAL INJECTION SYSTEM MECHANICAL CHEMICAL PIPING DETAILS	24	Yes
RWC	H-3-317690-001	00	S	CHEMICAL INJECTION SYSTEM ELECTRICAL SITE PLAN	25	Yes
RWC	H-3-317691-001	00	S	CHEMICAL INJECTION SYSTEM ELECTRICAL ENLARGED SITE PLAN	26	Yes
NWC	H-3-317691-002	0NEW	S	CHEMICAL INJECTION SYSTEM ELECTRICAL ENLARGED SITE PLAN	27	Yes
NWC	H-3-317691-003	0NEW	S	CHEMICAL INJECTION SYSTEM ELECTRICAL ENLARGED SITE PLANS	28	Yes
RWC	H-3-317692-001	00	S	CHEMICAL INJECTION SYSTEM ELECTRICAL DETAILS	29	Yes
NWC	H-3-317692-002	0NEW	S	CHEMICAL INJECTION SYSTEM ELECTRICAL DETAILS	30	Yes
RWC	H-3-317693-001	01	E	CHEMICAL INJECTION SYSTEM ELECTRICAL ONELINE DIAGRAM	31	Yes
NWC	H-3-317693-002	0NEW	E	CHEMICAL INJECTION SYSTEM ELECTRICAL PANEL SCHEDULES	32	Yes
NWC	H-3-317694-001	0NEW	S	SAMPLE SYSTEM ELECTRICAL SITE PLAN	33	Yes
NWC	H-3-317694-002	0NEW	S	SAMPLE SYSTEM ELECTRICAL DETAILS	34	Yes
NWC	H-3-317694-003	0NEW	S	SAMPLE SYSTEM ELECTRICAL MATRL LIST CABLE SCH & NP LEGEND	35	Yes
NWC	H-3-317694-004	0NEW	S	SAMPLE SYSTEM RACK MATERIAL ASSEMBLY	36	Yes
NWC	H-3-317695-001	0NEW	E	SAMPLE SYSTEM ELECTRICAL ONE LINE DIAG & PANEL SCH	37	Yes
RWC	H-1-91584-001	07	E	CHEMICAL INJECTION SYSTEM P & ID INJECTION TRAILER N1	38	Yes
RWC	H-1-91585-001	06	E	CHEMICAL INJECTION SYSTEM P & ID INJECTION TRAILER N2	39	Yes
RWC	H-1-91586-001	05	S	CHEMICAL INJECTION SYSTEM MECHANICAL INJECTION TRAILER N1	40	Yes
RWC	H-1-91587-001	04	S	CHEMICAL INJECTION SYSTEM MECHANICAL TRAILER N1 SECTIONS	41	Yes
RWC	H-1-91588-001	05	S	CHEMICAL INJECTION SYSTEM MECHANICAL INJECTION TRAILER N2	42	Yes
RWC	H-1-91589-001	04	S	CHEMICAL INJECTION SYSTEM MECHANICAL TRAILER N2 SECTIONS	43	Yes
RWC	H-1-91593-001	03	S	CHEMICAL INJECTION SYSTEM ELEC/CTRL TRLR N1 PLANS & DETAILS	44	Yes
RWC	H-1-91593-002	02	S	CHEMICAL INJECTION SYSTEM ELEC/CTRL TRLR N1 PLANS & DETAILS	45	Yes
RWC	H-1-91594-001	02	E	CHEMICAL INJECTION SYSTEM ONE LINE & PNLBD SCH TRLR N1	46	Yes
RWC	H-1-91595-001	03	S	CHEMICAL INJECTION SYSTEM ELEC/CTRL TRLR N2 PLANS & DETAILS	47	Yes
RWC	H-1-91595-002	02	S	CHEMICAL INJECTION SYSTEM ELEC/CTRL TRLR N2 PLANS & DETAILS	48	Yes

CHPRC ENGINEERING CHANGE REQUEST/FACILITY MODIFICATION PACKAGE (ECR/FMP)

ECR No: ECR-18-001444

ECR/FMP Title: 300-FF-5 Chemical Injection & Monitoring Well Sample System for Site B

RWC	H-1-91596-001	02	E	CHEMICAL INJECTION SYSTEM ONE LINE & PNLBD SCH TRLR N2	49	Yes
I	H-6-16781-001	00	S	P&ID FILTER SKID SIX PACK SKID 1	50	Yes
RWC	H-6-16781-002	00	S	P&ID FILTER SKID SIX PACK SKID 2	51	Yes

3.0 DESIGN REQUIREMENTS

Functional Requirements:

- Functional requirements are listed in SGW-60243, 300-FF-5 Operable Unit Stage B Uranium Sequestration Functional Requirements.
- MSA-1604905 (Reissue) Ecological and Cultural Clearance for Columbia River access and submersible pumps in the Columbia River for the 300 Area Sequestration remedial activities.
- River and Chemical pumps to be tested to ensure operability.
- Construct a portable monitoring well sampling station / valve manifold, which will allow 24 wells, in groups of 6, to be purged and sampled.
- Sample pumps will be controlled & powered by Adjustable Frequency Drives (AFD).
- Each AFD will control 6 pumps at one time.
- Project intention is to replace system with manual sampling prior to freezing.

Design Criteria:

- All piping and equipment shall meet ASME B31.3 including section 302.2.3 unlisted components. Unlisted hoses were successfully used in comparable conditions in phase A. Hose pressure ratings are greater than pump deadhead. River pump deadhead = 111psi, chemical pump deadhead at 39 psi.
- Electrical installations will comply with NEC.
- System design pressure is 113 psi

Hazard Analysis/Requirements:

The only hazards associated with the products are contact/dermal. PPE will be required and listed in the Operation procedure.

The system has been evaluated for safeguards per Appendix G of ASME B313.3-2016. Work boundaries have been established and yellow jacket has been identified as safeguarding.

Tubing has been evaluated and determined to be acceptable for sampling.(will not contaminate sample.)

Other Analysis/Requirements:

SGW-48737 Apatite Injection System Civil/Structural Calculations
SGW-57336 Apatite Tank Tie-Down Analysis

CHPRC ENGINEERING CHANGE REQUEST/FACILITY MODIFICATION PACKAGE (ECR/FMP)

ECR No: ECR-18-001444
ECR/FMP Title: 300-FF-5 Chemical Injection & Monitoring Well Sample System for Site B

4.0 ACCEPTANCE CRITERIA and METHODS

Acceptance Criteria	Acceptance Method
Verify the electrical systems meet the requirements of NFPA 70, the National Electric Code (NEC); Inspection and acceptance of the electrical system by the Electrical Inspector; Document successful completion in the work package	☒ Inspection ☐ Testing
Initial service leak test ASME B31.3. Document successful completion in the work package	☐ Inspection ☒ Testing
Successful continuity and megger testing of 480VAC circuits; Successful continuity testing and verification conductors are not unintentionally grounded for 120VAC circuits; Successful continuity testing of instrument and control circuits. Document successful completion in the work package	☐ Inspection ☒ Testing
Verify electrical & mechanical racks are protected from vehicle strikes	☒ Inspection ☐ Testing

5.0 AFFECTED and RELATED ECR/FMPs

Action	ECR/FMP No.	ECR/FMP Title
REL	ECR-16-001223	300 AREA CHEMICAL INJECTION SITE B CIVIL LAYOUT
REL	ECR-16-001457	300 Area Site B Electrical Power Drop
S	ECR-16-001471	300 AREA FF-5 MONITORING WELL SAMPLE SYSTEM STATION
S	ECR-17-000112	300-FF-5 Area Chemical Injection System Installation - Site B
S	ECR-18-000692	300-FF-5 Chemical Injection & Monitoring Well Sample System at Site B

6.0 OTHER AFFECTED DOCUMENTS

Document Type	Document No.	Rev. No.	Owning Organization	Technical Authority
Operations Procedure	SGRP-PRO-OP-53038	0	SGRP Operations	E. Bertrand

7.0 DESIGN VERIFICATION

Verification by: ☒ Peer Review ☐ Formal Design Review ☐ Alternate Calculations ☐ Qualification Testing ☐ Not Required

Design Verification Checklist:

a.	Are the Functional Requirements and Design Criteria appropriately selected for the modification?	☒ Yes	☐ No	☐ NA
b.	Does the design meet the specified Functional Requirements and Design Criteria?	☒ Yes	☐ No	☐ NA
c.	Were the design inputs correctly incorporated into the design?	☒ Yes	☐ No	☐ NA
d.	Is the design output reasonable compared to the design inputs?	☒ Yes	☐ No	☐ NA
e.	Have suitable materials, parts, and processes been specified?	☒ Yes	☐ No	☐ NA
f.	Have suitable acceptance, inspection, and testing criteria been specified?	☒ Yes	☐ No	☐ NA
g.	Have constructability, maintenance, and operability been adequately addressed in the design?	☒ Yes	☐ No	☐ NA
h.	Are all affected design documents identifies and appropriately changed?	☒ Yes	☐ No	☐ NA

Additional Design Verification Documentation Prepared? ☐ Yes ☒ No
NOTE: Identify additional Design Verification Documentation in Section 2.0 Package Index.

A review of the design has been performed. The selected Functional Requirements and Design Criteria meet the stated Engineering Request. Design Verification performed by the method(s) identified has confirmed that the design documented by this FMP is adequate and meets the stated Functional Requirements and Design Criteria

Design Verifier:	Print Name	Signature	Date
	AL Esparza (Mechanical)	SL Remy for AL Esparza per telecom	8/27/18
	JM Snider (Electrical)	SL Remy for JM Snider per telecom	8/27/18

8.0 REVIEWS

USQ: ☐ USQ ☐ GCX No.: ☒ Not Required

Reviewer:	Print Name	Signature	Date
	Jeff Riddelle	Jeff Riddelle	8/27/18

Environmental: EASF ☒ Screened Ref: 7-10-15 ☐ Not Required

ECO:	Print Name	Signature	Date
	SS Sexton	[signature]	8/27/18

CHPRC ENGINEERING CHANGE REQUEST/FACILITY MODIFICATION PACKAGE (ECR/FMP)

ECR No: ECR-18-001444

ECR/FMP Title: 300-FF-5 Chemical Injection & Monitoring Well Sample System for Site B

9.0 APPROVALS and DISTRIBUTION

Approvals

	Print Name	Signature	Date
ECR/FMP Author:	SL Renz	Susan Renz	8/27/18
Design Authority:	CJ Ayres		8/27/18
Engineering Manager:	JG Riddelle		8/28/18
Operations:	DO Neshem		8/27/18
Electrical Design Authority:	CJ Ayres		8/27/18
Safety:	~~EM Baldwin~~ PJ VOPALENSKY	SLRenz for PJ Vopalensky per telecom	8/27/18
Industrial Hygiene:	JA Herber		8/27/18
Project Manager:	BM Cunningham		8.27.18

Distribution

HID	Name	HID	Name
H0023632	SL Renz	H0511610	JA Herber
H0038443	JG Riddelle	H3464477	EP Bertrand
H8293029	CJ Ayres	H5540866	JC Cook
		H6285202	DO Neshem
		H6265451	RM Hermann
		H7104115	BM Cunningham
		H0090549	JR Lapointe

This page intentionally left blank.

PROJECT TITLE:

300 AREA FF-5 CHEMICAL INJECTION SYSTEM

BY:

CHPRC

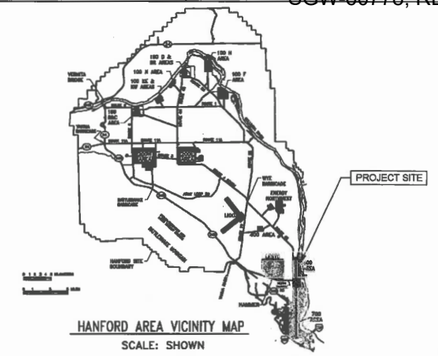

HANFORD AREA VICINITY MAP
SCALE: SHOWN

DRAWING LIST

GENERAL NOTES:

1. ABBREVIATIONS IN ACCORDANCE WITH ASME Y1.1.
2. FOR CONSTRUCTION SPECIFICATION SEE NOTES ON DRAWING.

CIVIL/STRUCTURAL

SHEET	DESCRIPTION
H-3-317677-1	CHEMICAL INJECTION SYSTEM DRAWING LIST
H-3-317678-1	CHEMICAL INJECTION SYSTEM CIVIL SITE PLAN
H-3-317679-1	CHEMICAL INJECTION SYSTEM CIVIL ENLARGED SITE PLAN
H-3-317680-1	CHEMICAL INJECTION SYSTEM CIVIL ENLARGED SITE PLAN
H-3-317681-1	SAMPLE SYSTEM CIVIL SITE PLAN
H-3-317681-2	SAMPLE SYSTEM CIVIL EQUIPMENT LOCATIONS
H-3-317682-1	SPARE
H-1-91580-1	CHEMICAL INJECTION SYSTEM STRUCTURAL PLAN & NOTES
H-1-91581-1	CHEMICAL INJECTION SYSTEM STRUCTURAL SECTIONS & DETAILS
H-1-91582-1	CHEMICAL INJECTION SYSTEM STRUCTURAL SECTIONS & DETAILS
H-1-91583-1	CHEMICAL INJECTION SYSTEM STRUCTURAL SECTIONS & DETAILS
H-1-91583-2	CHEMICAL INJECTION SYSTEM STRUCTURAL SECTIONS & DETAILS

P&ID

SHEET	DESCRIPTION
H-3-317683-1	SAMPLE SYSTEM STATION P&ID
H-1-91584-1	CHEMICAL INJECTION SYSTEM P & ID INJECTION TRAILER N1
H-1-91585-1	CHEMICAL INJECTION SYSTEM P & ID INJECTION TRAILER N2

MECHANICAL

SHEET	DESCRIPTION
H-1-91586-1	CHEMICAL INJECTION SYSTEM MECHANICAL INJECTION TRAILER N1
H-1-91587-1	CHEMICAL INJECTION SYSTEM MECHANICAL TRAILER N1 SECTIONS
H-1-91588-1	CHEMICAL INJECTION SYSTEM MECHANICAL INJECTION TRAILER N2
H-1-91589-1	CHEMICAL INJECTION SYSTEM MECHANICAL TRAILER N2 SECTIONS
H-3-317684-1	CHEMICAL INJECTION SYSTEM MECHANICAL INJECTION WELL DETAILS
H-3-317685-1	CHEMICAL INJECTION SYSTEM MECHANICAL PIPE & TUBE SCH DETAIL
H-3-317686-1	SAMPLE SYSTEM WELL HEAD DETAILS
H-3-317686-2	SAMPLE SYSTEM TK-1 FILL SYS STRUCT
H-3-317686-3	SAMPLE SYSTEM TK-1 FILL SYS PIPE
H-3-317686-4	SAMPLE SYSTEM TK-2 FILL SYS STRUCT
H-3-317686-5	SAMPLE SYSTEM TK-2 FILL SYS PIPE
H-3-317686-6	SAMPLE SYSTEM SAMPLING STATION STRUCT
H-3-317686-7	SAMPLE SYSTEM SAMPLING STATION PIPE
H-3-317686-8	SAMPLE SYSTEM MATERIALS LIST
H-3-317687-1	CHEMICAL INJECTION SYSTEM MECHANICAL CHEMICAL TANK PLAN
H-3-317688-1	CHEMICAL INJECTION SYSTEM MECHANICAL CHEMICAL TANK DETAILS
H-3-317689-1	CHEMICAL INJECTION SYSTEM MECHANICAL CHEMICAL PIPING DETAILS

ELECTRICAL/CONTROL

SHEET	DESCRIPTION
H-3-317690-1	CHEMICAL INJECTION SYSTEM ELECTRICAL SITE PLAN
H-3-317691-1	CHEMICAL INJECTION SYSTEM ELECTRICAL ENLARGED SITE PLAN
H-3-317691-2	CHEMICAL INJECTION SYSTEM ELECTRICAL ENLARGED SITE PLAN
H-3-317691-3	CHEMICAL INJECTION SYSTEM ELECTRICAL ENLARGED SITE PLANS
H-3-317692-1	CHEMICAL INJECTION SYSTEM ELECTRICAL DETAILS
H-3-317692-2	CHEMICAL INJECTION SYSTEM ELECTRICAL DETAILS
H-3-317692-3	CHEMICAL INJECTION SYSTEM ELECTRICAL DETAILS
H-3-317692-4	CHEMICAL INJECTION SYSTEM ELECTRICAL DETAILS
H-3-317693-1	CHEMICAL INJECTION SYSTEM ELECTRICAL ONELINE DIAGRAM
H-3-317694-1	SAMPLE SYSTEM ELECTRICAL SITE PLAN
H-3-317694-2	SAMPLE SYSTEM ELECTRICAL DETAILS
H-3-317694-3	SAMPLE SYSTEM ELECTRICAL MATRL LIST CABLE SCH & NP LEGEND
H-3-317694-4	SAMPLE SYSTEM ELECTRICAL RACK MATRL ASSEMBLY
H-3-317695-1	SAMPLE SYSTEM ELECTRICAL ONELINE DIAGRAM & PANEL SCH
H-1-91593-1	CHEMICAL INJECTION SYSTEM ELEC/CTRL TRLR N1 PLANS & DETAILS
H-1-91593-2	CHEMICAL INJECTION SYSTEM ELEC/CTRL TRLR N1 PLANS & DETAILS
H-1-91593-3	CHEMICAL INJECTION SYSTEM ELEC/CTRL TRLR N1 PLANS & DETAILS
H-1-91594-1	CHEMICAL INJECTION SYSTEM ONE LINE & PNLBD SCH TRLR N1
H-1-91595-1	CHEMICAL INJECTION SYSTEM ELEC/CTRL TRLR N2 PLANS & DETAILS
H-1-91595-2	CHEMICAL INJECTION SYSTEM ELEC/CTRL TRLR N2 PLANS & DETAILS
H-1-91595-3	CHEMICAL INJECTION SYSTEM ELEC/CTRL TRLR N2 PLANS & DETAILS
H-1-91596-1	CHEMICAL INJECTION SYSTEM ONE LINE & PNLBD SCH TRLR N2
H-1-91600-1	CHEMICAL INJECTION SYSTEM CONTROL ENCLOSURE #1 ASSEMBLY
H-1-91600-2	CHEMICAL INJECTION SYSTEM CONTROL ENCLOSURE #1 WIRING DIAGRAM
H-1-91600-3	CHEMICAL INJECTION SYSTEM CONTROL ENCLOSURE #1 WIRING DIAGRAM
H-1-91601-1	CHEMICAL INJECTION SYSTEM CONTROL ENCLOSURE #2 ASSEMBLY
H-1-91601-2	CHEMICAL INJECTION SYSTEM CONTROL ENCLOSURE #2 WIRING DIAGRAM
H-1-91601-3	CHEMICAL INJECTION SYSTEM CONTROL ENCLOSURE #3 WIRING DIAGRAM
H-3-317696-1	SPARE
H-3-317697-1	SPARE
H-3-317698-1	SPARE
H-3-317699-1	SPARE
H-3-317700-1	SPARE
H-3-317701-1	SPARE

DWG NUMBER	TITLE	REF NUMBER	TITLE
DRAWING TRACEABILITY LIST		REFERENCES	
		NEXT USED ON	

REV NO.	DESCRIPTION
1	REVISED PER ECR-16-001457, ECR-18-001444

REVISIONS

BLDG NO. 300G
INDEX NO. 8600

CAUTION
NOT COMPLETE WITHOUT CURRENT CHANGE DOCUMENTS FROM DATABASE

ATTENTION
DESTROY THIS DOCUMENT BY SHREDDING MAY CONTAIN SENSITIVE INFORMATION

	NAME	DATE	COMPANY
DRAWN BY	SL RENZ	4/26/18	CHPRC
DESIGN	AL ESPARZA		CHPRC
PROJECT ENGINEER			CHPRC
PROJECT MANAGER	JG RIDDLE		CHPRC
DESIGN AUTHORITY	AL ESPARZA		CHPRC

U.S. DEPARTMENT OF ENERGY
Richland Operations Office

CHEMICAL INJECTION SYSTEM DRAWING LIST

SIZE E | DRAWING NUMBER H-3-317677 | SHEET 1 | REV 0

SCALE NONE

XXXX PLOTID XXXX

ECR-18-001444 PAGE 6

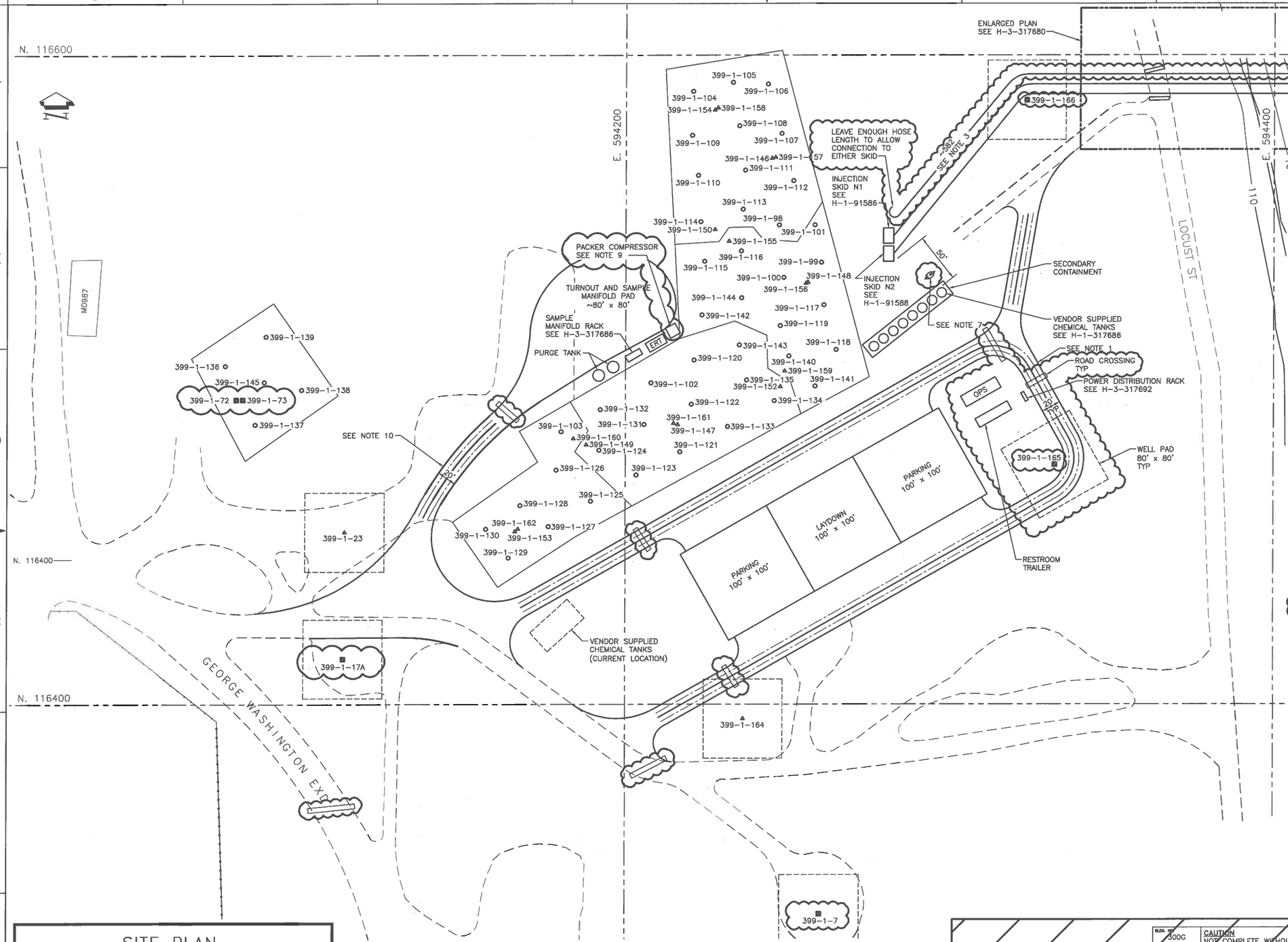

NOTES:

1. FIELD ROUTE 20'-0" WIDE GRAVEL ROAD.
2. NOT USED.
3. INJECTION SKID HOSES NOT TO EXCEED 600' FROM RIVER PUMPS DUE TO AFD LIMITATIONS. CHEMICAL TANK HOSES NOT TO EXCEED 100' FROM INJECTION SKIDS.
4. YELLOW JACKETS CAN BE USED FOR ELEC/MECH CROSSINGS. FIELD TO DETERMINE LOCATION. YELLOW JACKET TO BE RATED FOR 20,000LBS GVWR.
5. CHEMICAL TANK PAD AND TRUCK PAD TO HAVE APPROXIMATE 3" GRAVEL BASE AND A MINIMUM 2" SAND BASE.
6. BOLLARDS/ECO BLOCKS TO PROTECT WELL HEADS AS NEEDED.
7. SAFETY SHOWER/EYEWASH TO BE WITHIN 50 FT OF CHEMICAL HAZARD AND SHALL BE PORTABLE STYLE, HUGHES NORTH AMERICA MODEL STD-MH-P-2000 OR ENGINEERING APPROVED EQUAL.
8. SIX PACK FILTER CAN BE USED PRIOR TO INJECTION SKID. LOCATION TO BE DETERMINED IN FIELD.
9. ROUTE PACKER AIR TUBING AS NEEDED TO SERVICE ALL INJECTION WELLS.
10. ROAD MAY BE FIELD ROUTED AS NEEDED.

LEGEND:

- INJECTION WELL
- SAMPLE WELL
- TO BE SAMPLED MANUALLY

SITE PLAN

SCALE: 1:12

0 10 20 30 40 60 METERS

0 25 75 150 200 250 FEET

300 AREA CHEMICAL INJECTION SYSTEM LOCATION B SITE PLAN

DWG NUMBER	TITLE
DRAWING TRACEABILITY LIST	

REF NUMBER	TITLE
H-3-317677-1	DRAWING LIST
REFERENCES	
NEXT USED ON END ITEM	

REV NO.	REV DEL	DESCRIPTION
1		INC ECR-16-001223, ECR-18-001444
0		INITIAL RELEASE INTO DMCS PER ECR-15-008692

REVISIONS

BLDG. NO. 300G

INDEX NO. 8000

CAUTION: NOT COMPLETE WITHOUT CURRENT CHANGE DOCUMENTS FROM DATABASE

ATTENTION: DESTROY THIS DOCUMENT BY SHREDDING MAY CONTAIN SENSITIVE INFORMATION

	NAME	DATE	COMPANY
DRAWN BY	SR RENZ	4/12/18	CHPRO
DESIGN BY	AL ESPARZA		CHPRO
TECH REVIEW	RD BOWER		CHPRO
APPROVED	JG MADELLE		CHPRO

U.S. DEPARTMENT OF ENERGY
Richland Operations Office

CHEMICAL INJECTION SYSTEM
CIVIL
SITE PLAN

DESIGN AUTHORITY: AL ESPARZA

SIZE: F | DRAWING NUMBER: H-3-317678 | SHEET: 1 | REV: 0

SCALE: NOT SHOWN

PLOTID

DOC_TB_F.DWG (JAN 2012)

ECR-18-001444 PAGE 7

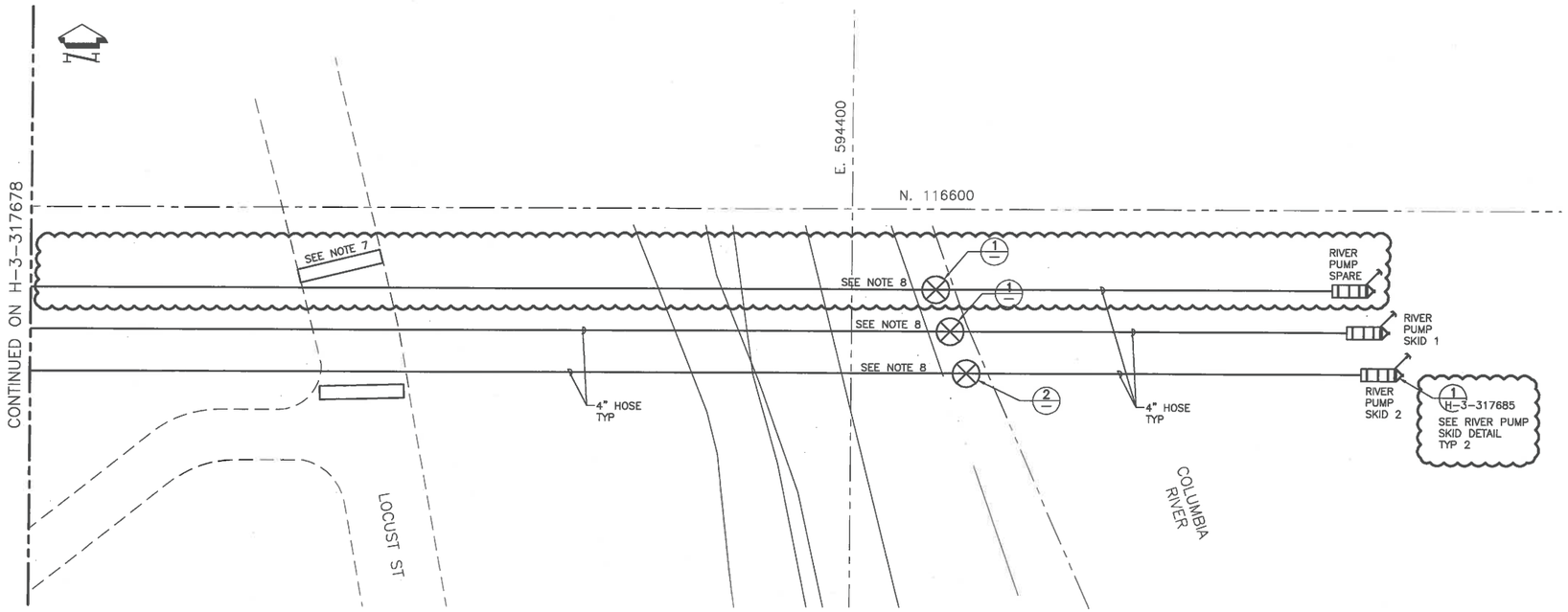

300 AREA CHEMICAL INJECTION SYSTEM ENLARGED SITE PLAN

SCALE: 1:4

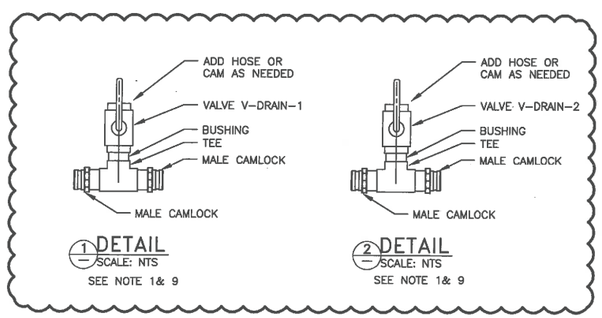

1 DETAIL
SCALE: NTS
SEE NOTE 1& 9

2 DETAIL
SCALE: NTS
SEE NOTE 1& 9

NOTES:

1. DETAIL 1 & 2 4" INSIZE OR APPROVED ENGINEERING EQUAL.
2. NOT USED.
3. NOT USED.
4. NOT USED.
5. NOT USED.
6. NOT USED.
7. TEMPORARY ROAD CLOSURE (BLOCKADE) IF REQUIRED.
8. ECO BLOCK(S) TO BE PLACED ON SHORE TO ASSIST IN ANCHORING OF RIVER PUMP SKID IF NEEDED.
9. VALVES TO BE OPENED TO DRAIN RIVER WATER FROM HOSE.

DWG NUMBER	TITLE
DRAWING TRACEABILITY LIST	

REF NUMBER	TITLE
H-3-317677-1	DRAWING LIST
REFERENCES	
NEXT USED ON END ITEM	

REV NO.	REV DEL.	DESCRIPTION
1		INC ECR-16-001223, ECR-18-001444
0		INITIAL RELEASE INTO DMCS PER ECR-15-000692

REVISIONS

BLDG. NO. 300G

INDEX NO. 8000

CAUTION
NOT COMPLETE WITHOUT CURRENT CHANGE DOCUMENTS FROM DATABASE

ATTENTION
DESTROY THIS DOCUMENT BY SHREDDING MAY CONTAIN SENSITIVE INFORMATION

	NAME	DATE	COMPANY
DRAWN BY	SL RENZ	4/17/18	CH2MHC
DESIGNED	AL ESPARZA		CH2MHC
CHECKED	JC RIDDELLE		CH2MHC
DESIGN AUTHORITY	AL ESPARZA		CH2MHC

U.S. DEPARTMENT OF ENERGY
Richland Operations Office

CHEMICAL INJECTION SYSTEM
CIVIL
ENLARGED SITE PLAN

SIZE	DRAWING NUMBER	SHEET	REV
F	H-3-317680	1	0

SCALE: AS SHOWN

PLOTTED

DOE_TEL_F.DWG (JAN 2012)

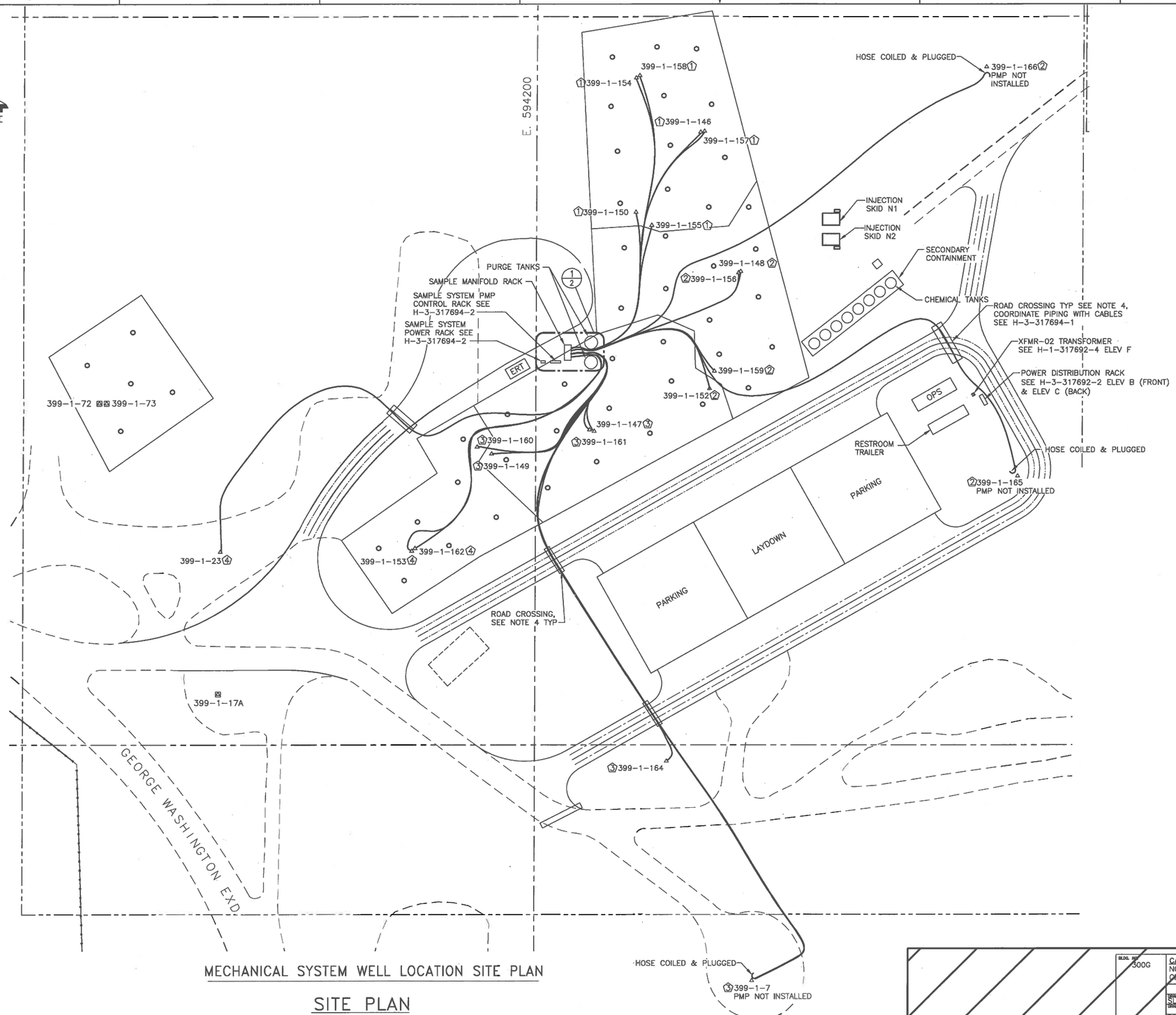

MECHANICAL SYSTEM WELL LOCATION SITE PLAN

SITE PLAN

SCALE: 1:11

NOTES:

1) SEE H-3-317686-1 FOR TYPICAL SAMPLE WELL-HEAD CONSTRUCTION
2) FIELD ROUTE TUBING FROM WELL HEAD TO SAMPLE STATION; CONNECTION INFORMATION SHOWN ON H-3-317686-7
3) FOR TUBING SPLICE INFORMATION SEE H-3-317686-3, DETAIL 2.
4) YELLOW JACKETS CAN BE USED FOR ELECTRICAL & MECHANICAL CROSSINGS. FIELD TO FINALIZE LOCATION. YELLOW JACKET SHALL BE RATED FOR 20,000 GVWR OR GREATER

LEGEND:

- INJECTION WELL
- SAMPLING WELL
- SAMPLE STATION GROUP
- TO BE MANUALLY SAMPLED

DWG NUMBER	TITLE
H-3-317677-1	DRAWING LIST

DRAWING TRACEABILITY LIST

REF NUMBER	TITLE
	REFERENCES

NEXT USED ON

REV NO.	REV BY	DESCRIPTION
B		INITIAL RELEASE INTO DMCS PER ECR-18-001444

REVISIONS

BLDG. NO. 300G

INDEX NO. 8000

CAUTION: NOT COMPLETE WITHOUT CURRENT CHANGE DOCUMENTS FROM DATABASE

ATTENTION: DESTROY THIS DOCUMENT BY SHREDDING MAY CONTAIN SENSITIVE INFORMATION

	NAME	DATE	COMPANY
DRAWN BY	SL RENZ	9/13/18	CHPRC
DRAWING CHECKED			CHPRC
ENGINEERING MANAGER	JG RIDDELLE		CHPRC
DESIGN AUTHORITY	AL ESPARZA		CHPRC

U.S. DEPARTMENT OF ENERGY
Richland Operations Office

SAMPLE SYSTEM CIVIL SITE PLAN

SIZE F | DRAWING NUMBER H-3-317681 | SHEET 1 | REV 0

SCALE SHOWN

PLOTID

DOE_TB_F.DWG (JAN 2012)

ECR-18-001444 PAGE 9

NOTES:

1) FIELD ROUTE TUBING FROM WELL HEAD TO SAMPLE STATION, SEE H-3-317686 SH-7 DET-D FOR TUBING CONNECTION LOCATION AND H-3-317686 SH-3 DET-1 & DET-2 FOR TUBING CONNECTION DETAILS.
2) CONNECTIONS FROM TANK TO DRAIN HOSE SHALL BE DETERMINED AND CREATED IN THE FIELD.
3) SEE H-3-317686-8 FOR MATERIALS LIST.
4) AREA IN FRONT OF ELECTRICAL RACKS TO BE KEPT CLEAR OF EQUIPMENT OR ROUTING, (MINIMUM 36 INCHES).
5) TOLERANCES (UNLESS NOTED OTHERWISE)
   EQUIPMENT LOCATIONS: ± 3"
   PIPE LOCATIONS: ± 3"
   METAL FABRICATIONS:
      FRACTIONAL ± 1/8"
      DECIMAL: ± 0.01"
      ANGULAR: ± 1°

LEGEND:

- INJECTION WELL
- SAMPLING WELL
- SAMPLE STATION GROUP
- TIE-DOWN STRAP
- 1" TUBING

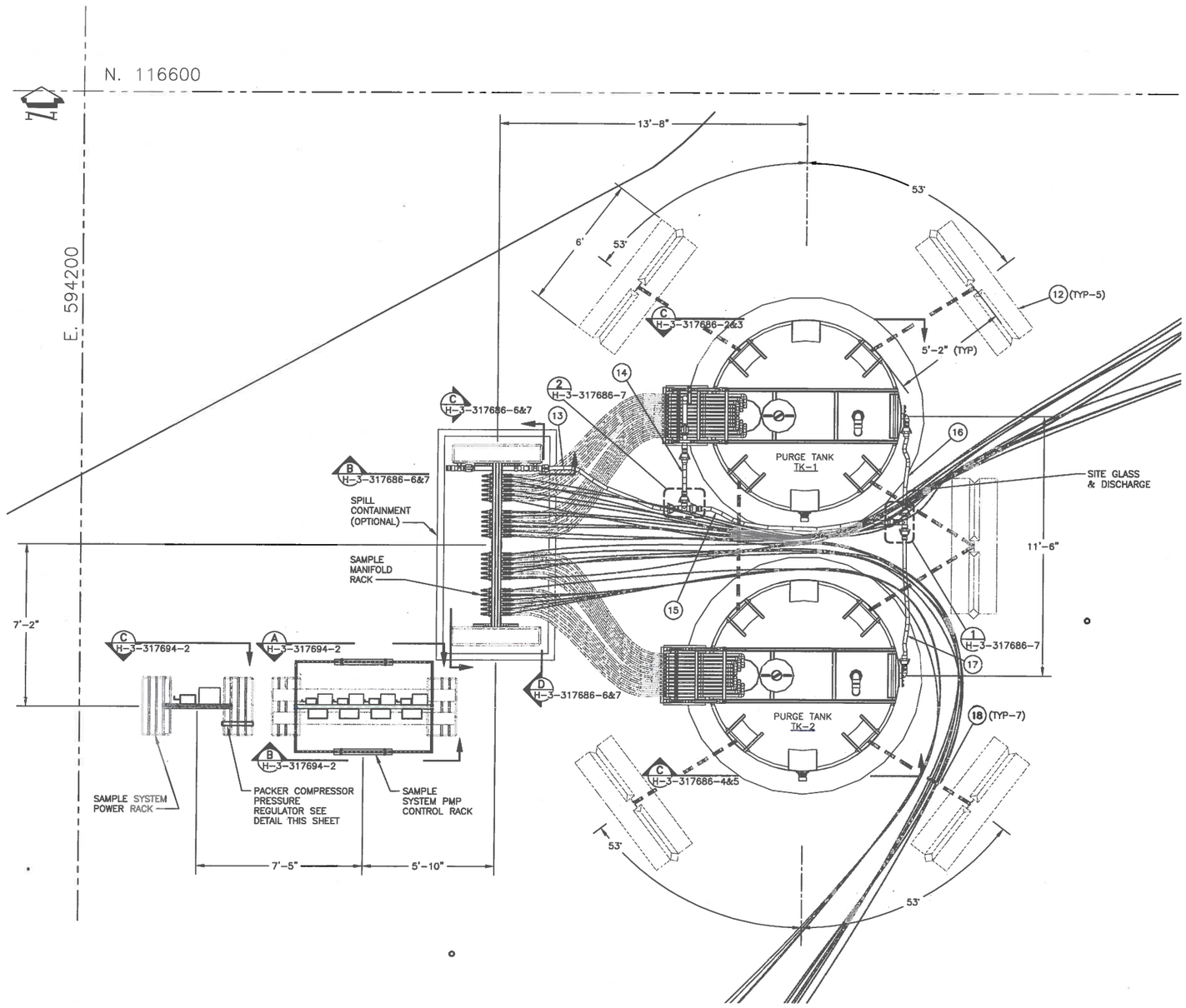

SAMPLE SYSTEM EQUIPMENT LOCATION

1 ENLARGED PLAN
H-3-317681-01

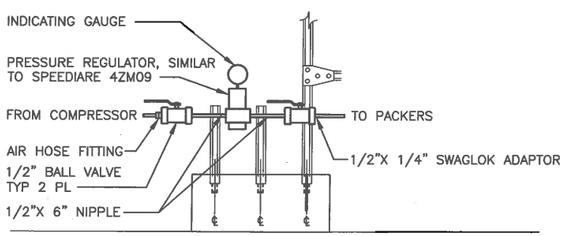

PACKER COMPRESSOR REGULATOR DETAIL

DWG NUMBER	TITLE
DRAWING TRACEABILITY LIST	

REF NUMBER	TITLE
H-3-317677-1	DRAWING LIST
REFERENCES	
NEXT USED ON	

REV NO.	REV BY	DESCRIPTION
0		INITIAL RELEASE INTO DMCS PER ECR-18-001444

REVISIONS

BLDG. NO. 300G

INDEX NO. 8000

CAUTION
NOT COMPLETE WITHOUT CURRENT CHANGE DOCUMENTS FROM DATABASE

ATTENTION
DESTROY THIS DOCUMENT BY SHREDDING MAY CONTAIN SENSITIVE INFORMATION

	NAME	DATE	COMPANY
DRAWN BY	SL RENZ	4/11/18	CH2M
ENGINEERING REVIEW	JG RIDDELLE		CH2M
			CH2M
DESIGN AUTHORITY	AL ESPARZA		CH2M

U.S. DEPARTMENT OF ENERGY
Richland Operations Office

SAMPLE SYSTEM
CIVIL
EQUIPMENT LOCATIONS

SIZE F | DRAWING NUMBER H-3-317681 | SHEET 2 | REV 0

SCALE SHOWN

PLOTID

DOC_TB_F.DWG (JAN 2012)

ECR-18-001444 PAGE 10

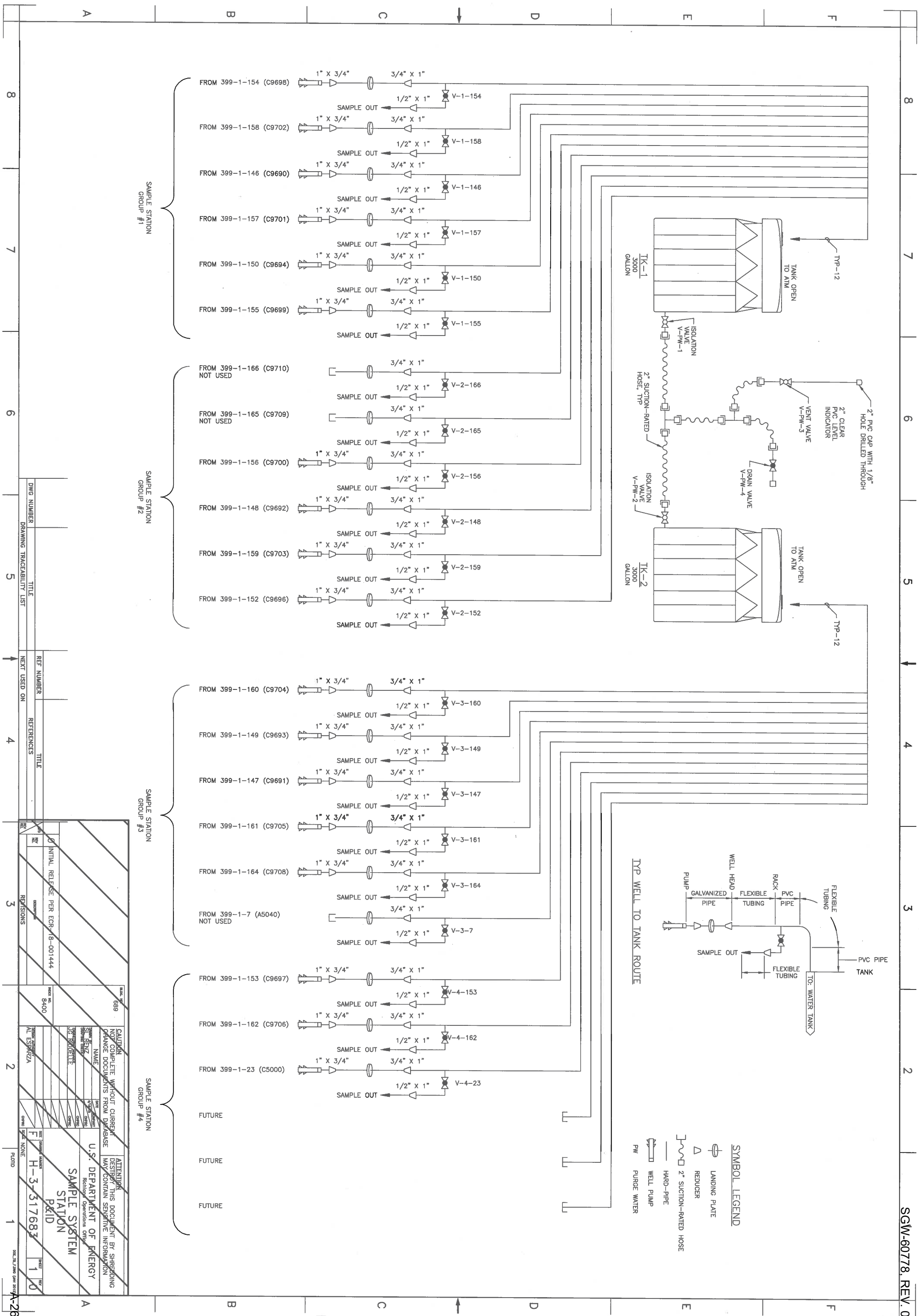
SAMPLE STATION GROUP #1
FROM 399-1-154 (C9698)
FROM 399-1-158 (C9702)
FROM 399-1-146 (C9690)
FROM 399-1-157 (C9701)
FROM 399-1-150 (C9694)
FROM 399-1-155 (C9699)
1" X 3/4"
3/4" X 1"
1/2" X 1"
SAMPLE OUT
V-1-154
V-1-158
V-1-146
V-1-157
V-1-150
V-1-155
SAMPLE STATION GROUP #2
FROM 399-1-166 (C9710) NOT USED
FROM 399-1-165 (C9709) NOT USED
FROM 399-1-156 (C9700)
FROM 399-1-148 (C9692)
FROM 399-1-159 (C9703)
FROM 399-1-152 (C9696)
V-2-166
V-2-165
V-2-156
V-2-148
V-2-159
V-2-152
SAMPLE STATION GROUP #3
FROM 399-1-160 (C9704)
FROM 399-1-149 (C9693)
FROM 399-1-147 (C9691)
FROM 399-1-161 (C9705)
FROM 399-1-164 (C9708)
FROM 399-1-7 (A5040) NOT USED
V-3-160
V-3-149
V-3-147
V-3-161
V-3-164
V-3-7
SAMPLE STATION GROUP #4
FROM 399-1-153 (C9697)
FROM 399-1-162 (C9706)
FROM 399-1-23 (C5000)
V-4-153
V-4-162
V-4-23
FUTURE
TK-1 3000 GALLON
TK-2 3000 GALLON
TANK OPEN TO ATM
TYP-12
ISOLATION VALVE V-PW-1
ISOLATION VALVE V-PW-2
2" SUCTION-RATED HOSE, TYP
VENT VALVE V-PW-3
DRAIN VALVE V-PW-4
2" CLEAR PVC LEVEL INDICATOR
2" PVC CAP WITH 1/8" HOLE DRILLED THROUGH
TYP WELL TO TANK ROUTE
PUMP
WELL HEAD
RACK
GALVANIZED PIPE
FLEXIBLE TUBING
PVC PIPE
FLEXIBLE TUBING
SAMPLE OUT
PVC PIPE
TANK
FLEXIBLE TUBING
TO: WATER TANK
SYMBOL LEGEND
LANDING PLATE
REDUCER
2" SUCTION-RATED HOSE
HARD-PIPE
WELL PUMP
PW PURGE WATER
DWG NUMBER
TITLE
DRAWING TRACEABILITY LIST
REF NUMBER
TITLE
REFERENCES
NEXT USED ON
REV NO
REV DEL
DESCRIPTION
REVISIONS
0 INITIAL RELEASE PER ECR-18-001444
CAUTION
NOT COMPLETE WITHOUT CURRENT CHANGE DOCUMENTS FROM DATABASE
ATTENTION
DESTROY THIS DOCUMENT BY SHREDDING MAY CONTAIN SENSITIVE INFORMATION
NAME
DATE
DRAWN
CHKD
U.S. DEPARTMENT OF ENERGY
Richland Operations Office
SAMPLE SYSTEM STATION P&ID
SIZE F
DRAWING NUMBER H-3-317683
SHEET 1
REV 0
SCALE NONE
PLOTTED
DOE_TB_F.DWG (JAN 2010)
A-26
SGW-60778, REV. 0

TABLE #1		
DEPTH OF INTERVAL	DISTANCE	
	A	0'–21.0'
	PACKER	21.0'–25.0'
	B	25.0'–32.0'

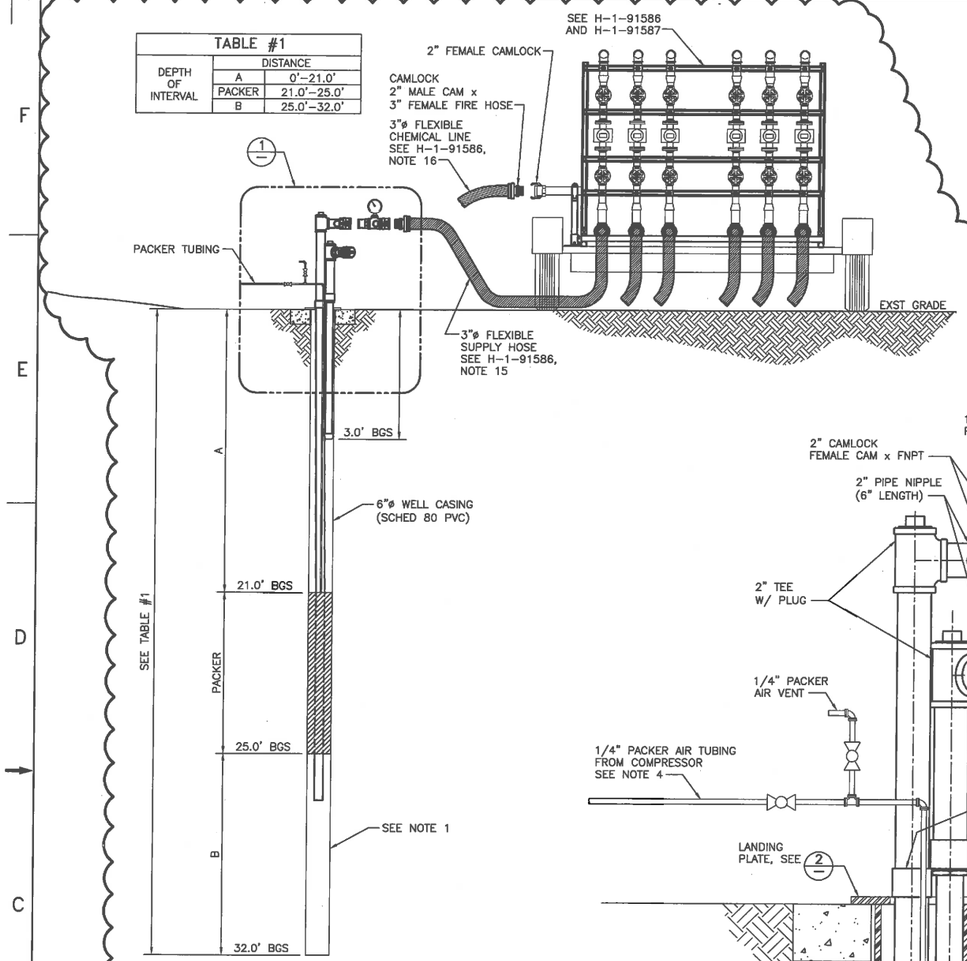

TYPICAL INJECTION WELL SECTION
SCALE: NONE

MISCELLANEOUS PIPE LENGTHS		
START POINT	END POINT	APPROXIMATE PIPE LENGTH (FT)
RIVER PUMP SKID 1	SHORE	110
RIVER PUMP SKID 2	SHORE	110
SHORE	INJECTION SKID N1	472
SHORE	INJECTION SKID N2	472
INJECTION SKID N1	CHEMICAL TANKS	85–121
INJECTION SKID N2	CHEMICAL TANKS	72–102

PIPE LENGTHS
SCALE: NONE

SKID LOCATIONS (APPROXIMATE)		
SKID (CENTER)	NORTHING (m)	EASTING (m)
INJECTION SKID N1	116544.44	594280.95
INJECTION SKID N2	116538.89	594280.95

SKID LOCATIONS
SCALE: NONE

NOTES:

1. PIPING BELOW PACKER DOES NOT REQUIRE HOLES OR CAP. WATER CAN DUMP DIRECTLY OUT OF END OF PIPE.
2. PACKERS: RST INSTRUMENTS MODEL # P5-9, PART # BP0224
3. COMPRESSOR: OPERATING PRESSURE 0–200 PSI MAX.
4. PIPE, FITTINGS, TUBING, AND HOSE MATERIAL SHALL BE AS FOLLOWS:
   PIPE: GALVANIZED SCHED 40 ASTM A53
   FITTINGS: GALVANIZED MALLEABLE IRON (GMI)
   PACKER TUBING: NYLON (OR EQUIVALENT) MIN 200 PSI
   SUPPLY HOSE: 125 PSI, DOUBLE JACKET FIRE HOSE
   OR ENGINEERING APPROVED EQUIVALENT

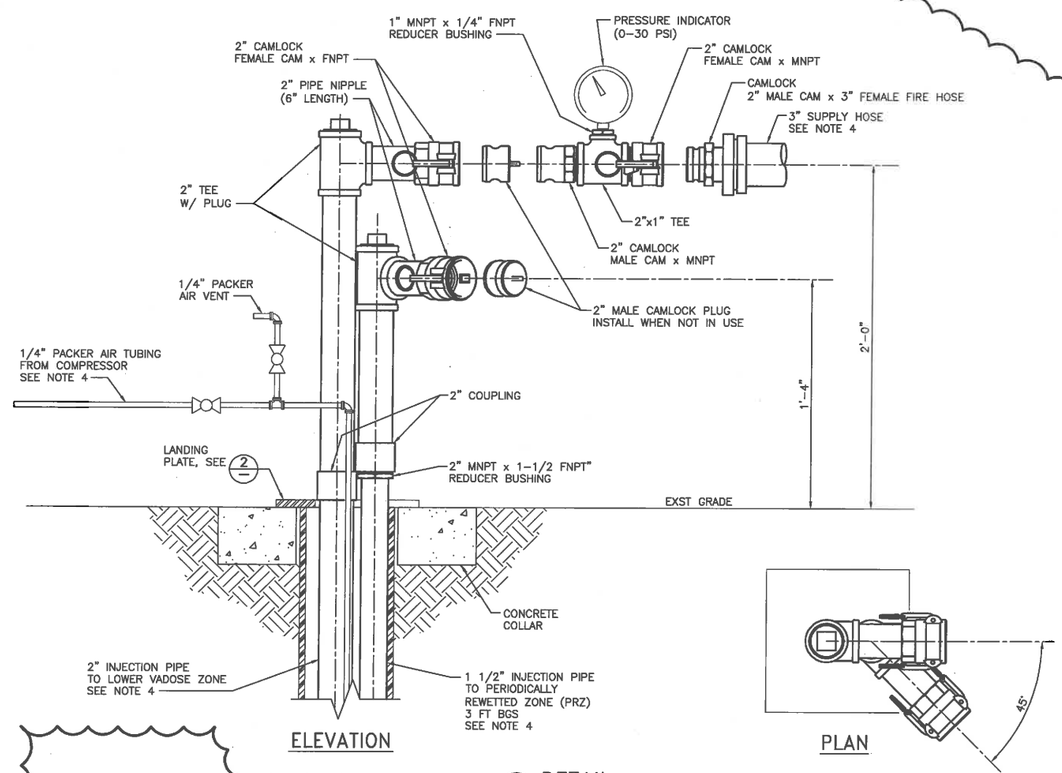

ELEVATION

1 DETAIL
SCALE: 1 1/2"=1'-0"

PLAN

WELL TABLE (INJECTION)				
WELL NAME	WELL ID	NORTHING (m)	EASTING (m)	PIPE LENGTH (ft) +20%
399-1-98	C9642	116548	594247	130
399-1-99	C9643	116536	594260	76
399-1-100	C9644	116532	594249	125
399-1-101	C9645	116548	594258	86
399-1-102	C9646	116499	594208	325
399-1-103	C9647	116484	594180	449
399-1-104	C9648	116589	594221	384
399-1-105	C9649	116592	594233	332
399-1-106	C9650	116591	594244	265
399-1-107	C9651	116576	594248	204
399-1-108	C9652	116578	594235	280
399-1-109	C9653	116575	594220	331
399-1-110	C9654	116563	594222	283
399-1-111	C9655	116565	594237	226
399-1-112	C9656	116561	594252	144
399-1-113	C9657	116553	594236	179
399-1-114	C9658	116549	594223	227
399-1-115	C9659	116537	594224	222
399-1-116	C9660	116540	594236	176
399-1-117	C9661	116523	594261	95
399-1-118	C9662	116509	594265	126
399-1-119	C9663	116517	594248	152
399-1-120	C9664	116506	594221	266
399-1-121	C9665	116478	594217	360
399-1-122	C9666	116493	594220	299
399-1-123	C9667	116471	594203	420
399-1-124	C9668	116478	594192	424
399-1-125	C9669	116463	594189	484
399-1-126	C9670	116472	594179	481
399-1-127	C9671	116455	594176	544
399-1-128	C9672	116461	594168	542
399-1-129	C9673	116445	594164	605
399-1-130	C9674	116454	594157	593
399-1-131	C9675	116486	594206	361
399-1-132	C9676	116491	594192	395
399-1-133	C9677	116486	594232	294
399-1-134	C9678	116494	594246	229
399-1-135	C9679	116500	594237	226
399-1-136	C9680	116505	594077	817
399-1-137	C9681	116486	594086	796
399-1-138	C9682	116497	594100	728
399-1-139	C9683	116514	594089	769
399-1-140	C9684	116507	594250	167
399-1-141	C9685	116498	594259	176
399-1-142	C9686	116520	594223	234
399-1-143	C9687	116511	594235	208
399-1-144	C9688	116525	594236	181
399-1-145	C9689	116500	594089	772

WELL LOCATION INFORMATION
SCALE: NONE

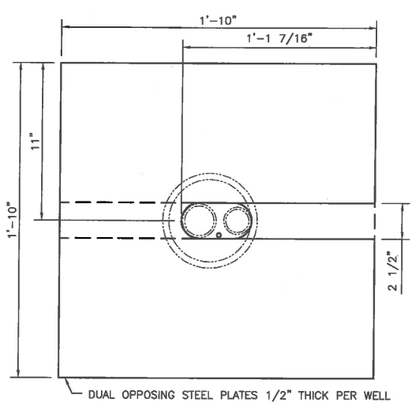

LANDING PLATE DETAIL
2
SCALE: 3"=1'-0"

DWG NUMBER	TITLE
DRAWING TRACEABILITY LIST	

REF NUMBER	TITLE
H-3-317677-1	DRAWING LIST
REFERENCES	
NEXT USED ON	

REV NO.	DESCRIPTION
1	INC ECR-18-001444
0	INITIAL RELEASE INTO DMCS PER ECR-15-000692

REVISIONS

BLDG. NO. 300G

INDEX NO. 8000

CAUTION
NOT COMPLETE WITHOUT CURRENT CHANGE DOCUMENTS FROM DATABASE

ATTENTION
DESTROY THIS DOCUMENT BY SHREDDING MAY CONTAIN SENSITIVE INFORMATION

	NAME	DATE	COMPANY
DRAWN BY	DL DEATON	5/15/18	CH2MHC
DESIGNED	RW WHITLOCK		CH2MHC
ENGINEERING CHANGE	JG RIODELTE		CH2MHC
DESIGN AUTHORITY	RW WHITLOCK		CH2MHC

U.S. DEPARTMENT OF ENERGY
Richland Operations Office

CHEMICAL INJECTION SYSTEM MECHANICAL
INJECTION WELL DETAILS

SIZE F | DRAWING NUMBER H-3-317684 | SHEET 1 | REV 0

SCALE SHOWN

PLOTID

DOE_TB_F.DWG (JAN 2012)

ECR-18-001444 PAGE 12

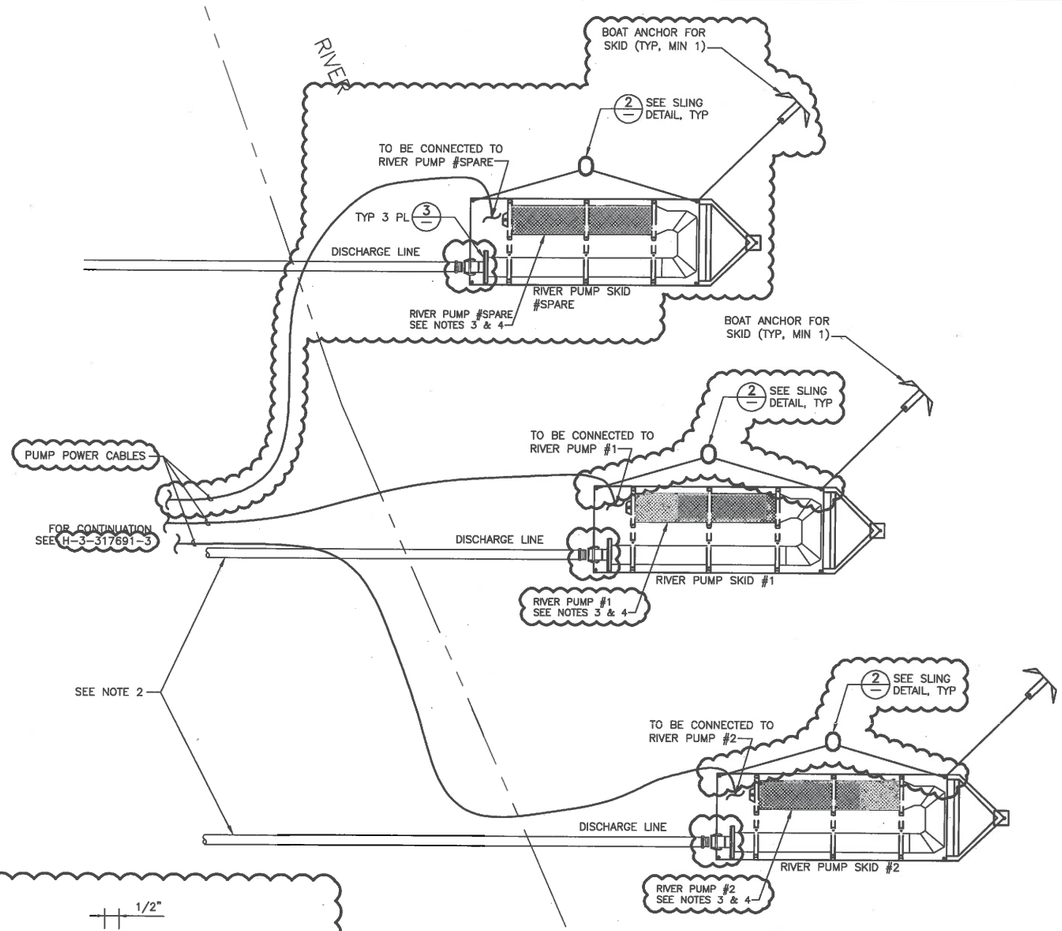

1 RIVER PUMP SKID DETAIL
H-3-317680-1 SCALE: NONE

NOTES:

1. ECO BLOCK MAY BE PLACED ON SHORE TO ASSIST IN ANCHORING OF RIVER PUMP SKID IF NEEDED.
2. HOSE FROM SUBMERSIBLE PUMP TO BE GOODYEAR PLICORD HD WATER DISCHARGE 150 PSI RATED. THIS HOSE IS REQUIRED FROM PUMP TO GRADE. THIS IS FOR PROTECTION FROM ROCKS, ETC. OTHER HOSE ENGINEERING APPROVED EQUIVALENT. FOR SUBMERSIBLE PUMPS HOSES SIMILAR HD, WATER DISCHARGE, 150 PSI, RIGID SUCTION RATED, ENGINEERING APPROVED ALTERNATES WILL BE INDICATED BY NAME IN AUTHORIZING WORK DOCUMENT.
3. PUMPS TO BE TESTED PRIOR TO RIVER PLACEMENT.
4. PUMPS TO BE 50–150 FT FROM SHORE IN APPROXIMATELY 8 FT OF WATER.

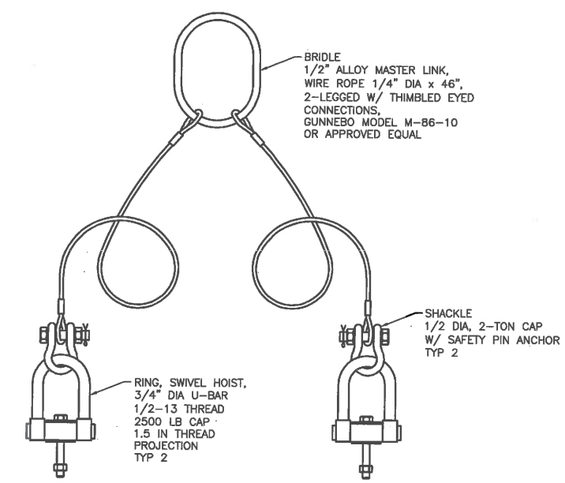

2 SLING DETAIL
SCALE: NONE

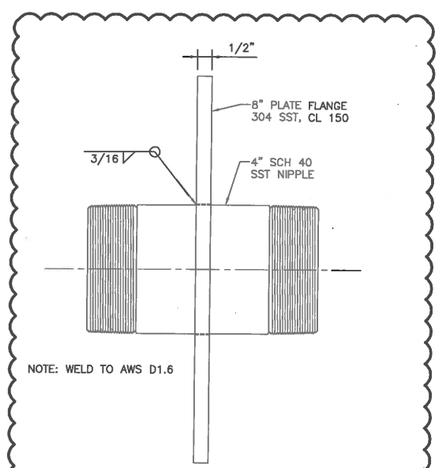

3 END FLANGE DETAIL
SCALE: NONE

DWG NUMBER	TITLE
DRAWING TRACEABILITY LIST	

REF NUMBER	TITLE
H-3-317677-1	DRAWING LIST
REFERENCES	
NEXT USED ON	

REV NO.	DESCRIPTION
1	INC ECR-18-001444
0	INITIAL RELEASE INTO DMCS PER ECR-15-000692
REVISIONS	

BLDG. NO. 300G

INDEX NO. 8000

CAUTION
NOT COMPLETE WITHOUT CURRENT CHANGE DOCUMENTS FROM DATABASE

ATTENTION
DESTROY THIS DOCUMENT BY SHREDDING MAY CONTAIN SENSITIVE INFORMATION

	NAME	DATE	COMPANY
DRAWN BY	DL DEATON	2/13/13	CHPRC
REVIEWED	RW WHITLOCK		CHPRC
ENGINEERING APPROVED	JG RODELLE		CHPRC
DESIGN AUTHORITY	RW WHITLOCK		CHPRC

U.S. DEPARTMENT OF ENERGY
Richland Operations Office

CHEMICAL INJECTION SYSTEM
MECHANICAL
RIVER PUMP SKID DETAIL

SIZE F | DRAWING NUMBER H-3-317685 | SHEET 1 | REV 0

SCALE SHOWN

PLOTID

DOE_TB_F.DWG (JAN 2012)

ECR-18-001444 PAGE 13

NOTES:

1) SEE H-317681-2 FOR TOLERANCES.
2) SEE H-3-317686-8 FOR MATERIALS LIST.

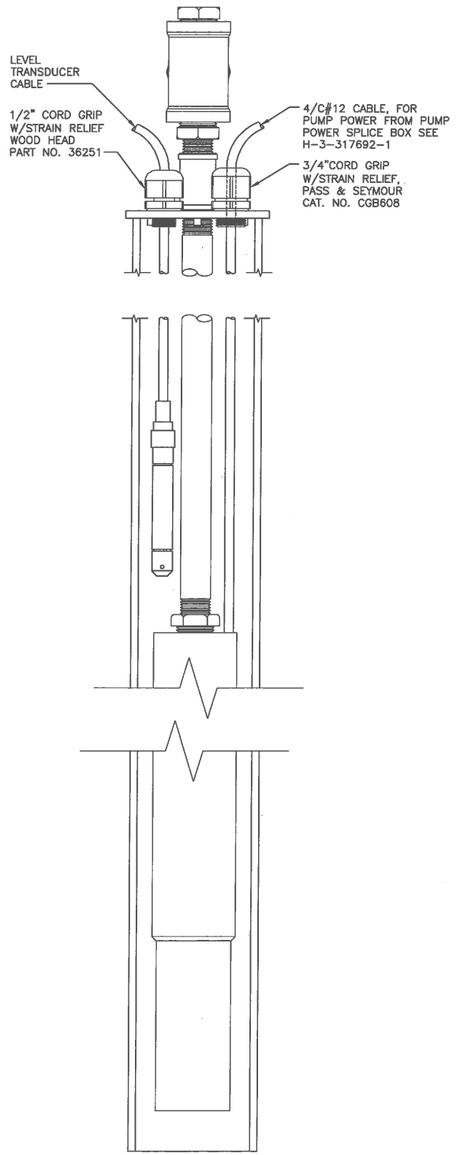

B SECTION
SCALE: 6"=1'-0"

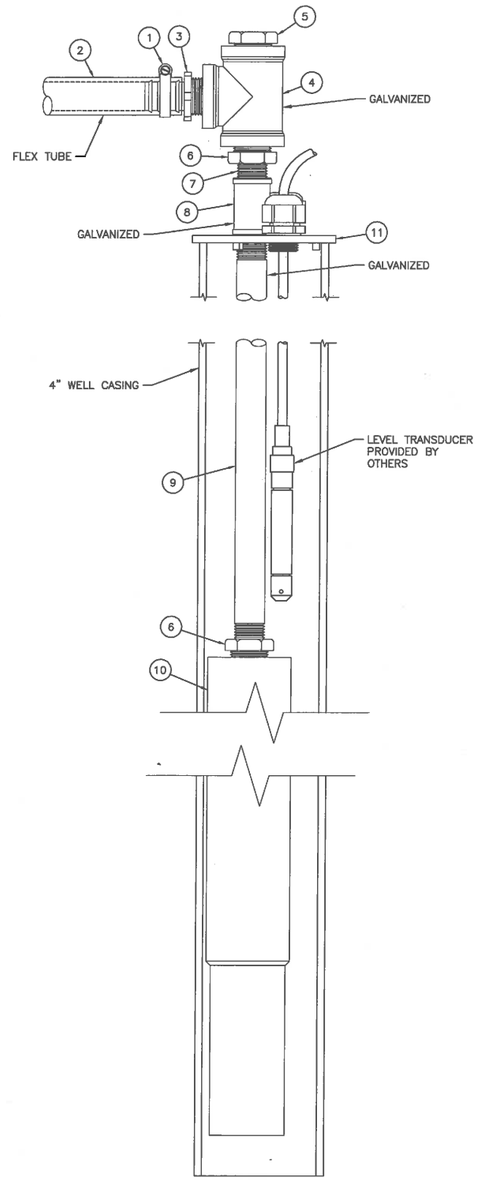

A SECTION
SCALE: 6"=1'-0"

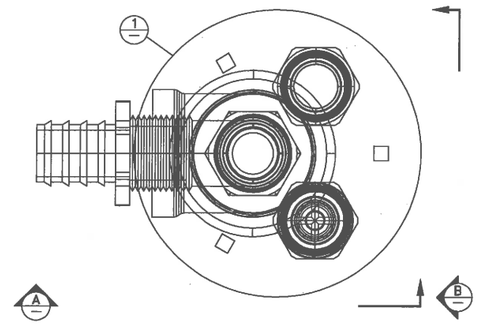

1 TYPICAL SAMPLE WELL-HEAD ARRANGEMENT
H-3-317681-1 SCALE: 1'-0"=1'-0"

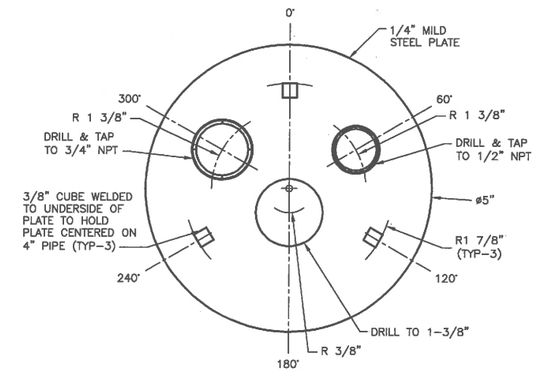

1 LANDING PLATE DETAIL
SCALE: 1'-0"=1'-0"

MONITORING WELL TABLE

	WELL NAME	WELL ID	NORTHING (m)	EASTING (m)	TUBING LENGTH (ft) +20%	SAMPLE PUMP DEPTH (ft bgs)
	399-1-146	C9690	116568	594245	205	32
	399-1-147	C9691	116486	594216	91	32
	399-1-73	C8935	116494	594082	–	–
*	399-1-72	C8934	116494	594080	–	–
*	399-1-148	C9692	116530	594256	149	32
	399-1-149	C9693	116480	594188	152	32
	399-1-150	C9694	116546	594228	137	32
	399-1-152	C9696	116498	594248	137	32
	399-1-153	C9697	116453	594166	251	32
	399-1-154	C9698	116583	594227	233	32
	399-1-155	C9699	116543	594232	129	37
	399-1-156	C9700	116530	594256	147	37
	399-1-157	C9701	116569	594246	208	37
	399-1-158	C9702	116584	594228	233	37
	399-1-159	C9703	116503	594249	126	37
	399-1-160	C9704	116482	594184	162	37
	399-1-161	C9705	116487	594215	88	37
	399-1-162	C9706	116454	594167	238	37
*	399-1-17A	A5028	116414	594113	–	–
	399-1-164	C9708	116396	594237	347	37
*	399-1-165	C9709	116474	594333	403	37
*	399-1-166	C9710	116586	594324	373	37
	399-1-23	C5000	116453	594114	401	36
*	399-1-7	A5040	116335	594260	581	45

WELL LOCATION INFORMATION
SCALE: NONE

* TO BE MANUALLY SAMPLED

DWG NUMBER	TITLE	REF NUMBER	TITLE
DRAWING TRACEABILITY LIST		NEXT USED ON	REFERENCES

REV NO.	REV DEL	DESCRIPTION
B		INITIAL RELEASE INTO DMCS PER ECR-18-001444
REVISIONS		

BLDG. NO. 0000
INDEX NO. 0000

CAUTION
NOT COMPLETE WITHOUT CURRENT CHANGE DOCUMENTS FROM DMDATABASE

ATTENTION
DESTROY THIS DOCUMENT BY SHREDDING MAY CONTAIN SENSITIVE INFORMATION

	NAME	DATE
DRAWN BY	SI RENZ	4/26/18
ENGINEERING MANAGER	JG RIDDELLE	
DESIGN AUTHORITY	AL ESPARZA	

U.S. DEPARTMENT OF ENERGY
Richland Operations Office

SAMPLE SYSTEM WELL HEAD DETAILS

SIZE F | DRAWING NUMBER H-3-317686 | SHEET 1 | REV 0
SCALE SHOWN
PLOTTED

ECR-18-001444 PAGE 14

NOTES:

1. TORQUE 1/2"-16 STRUCTURAL BOLTS TO 50 FT/LBS.
2. TANK SPECIFICATIONS:
   OUTSIDE DIAMETER = 102.00 in
   HEIGHT = 143.28 in
   VOLUME = 3000 gal
3. SEE H-3-317681-2 FOR TOLERANCES.
4. SEE H-3-317686-8 FOR MATERIALS LIST.

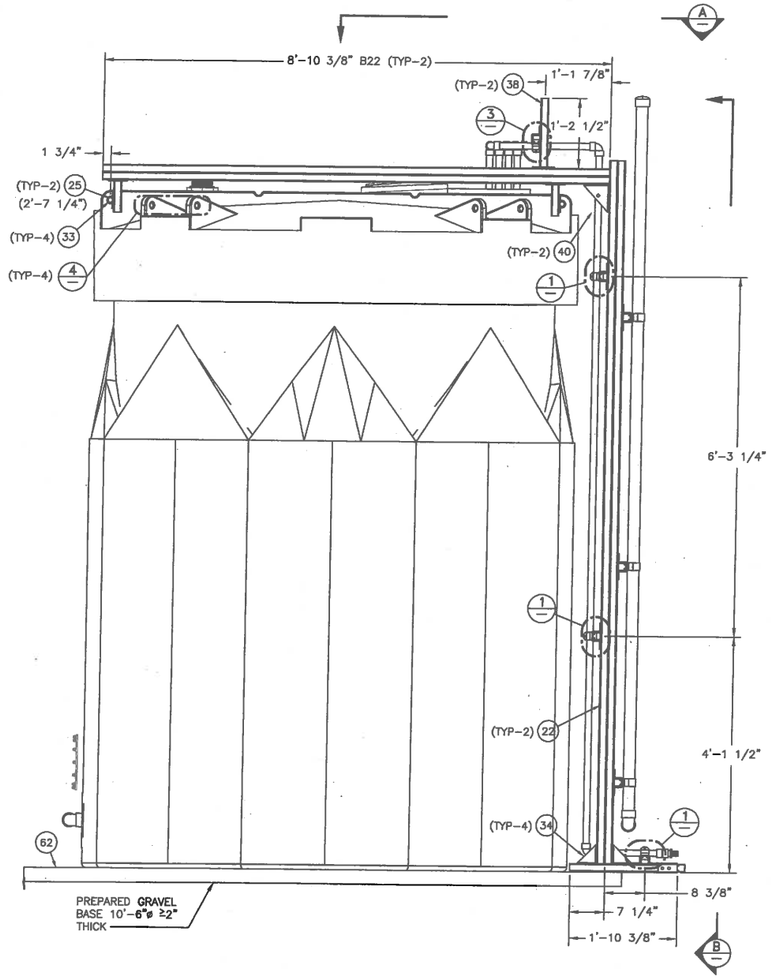

C TK-1 STRUCT SIDE
H-3-317681-2 SCALE: 1"=1'-0"

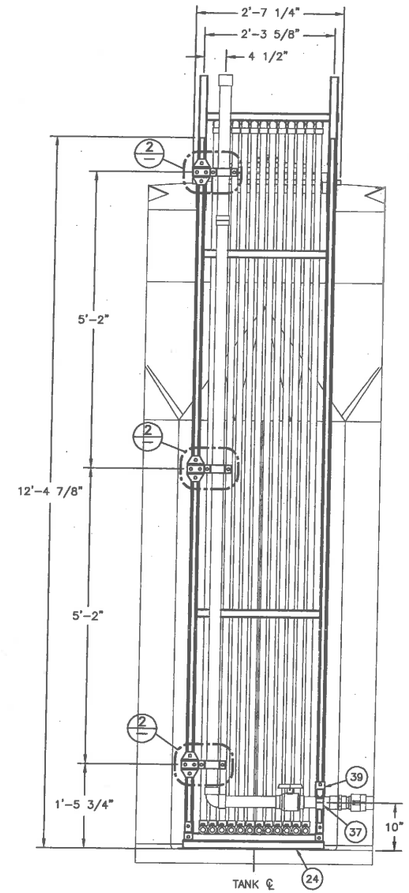

B TK-1 STRUCT FRONT
SCALE: 1"=1'-0"

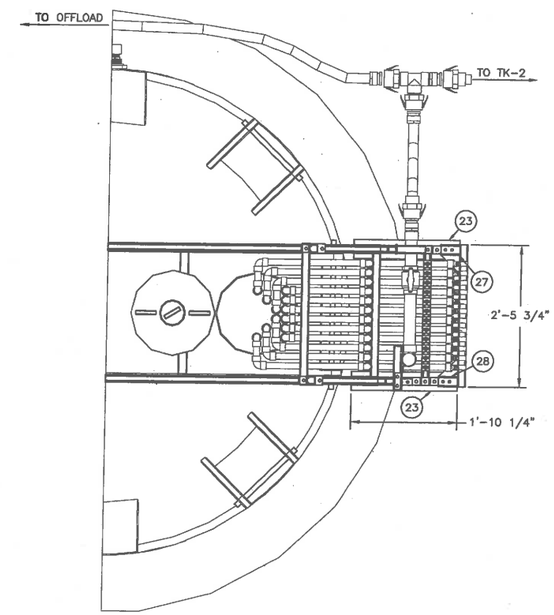

A TK-1 STRUCT TOP
SCALE: 1"=1'-0"

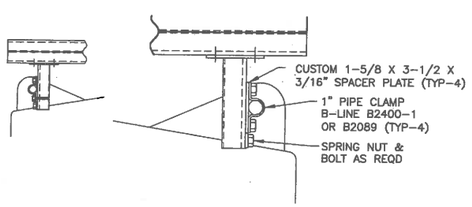

5 PIPE SUPPORT DETAIL
SCALE: NONE

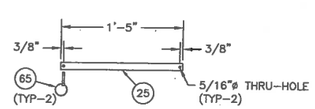

4 TIE-DOWN BAR DET
SCALE: 1 1/2"=1'-0"

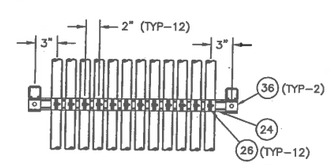

3 PIPE SPRT DETAIL
SCALE: 1 1/2"=1'-0"

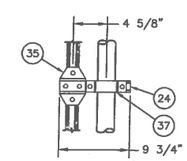

2 PIPE SPRT DETAIL
SCALE: 1 1/2"=1'-0"

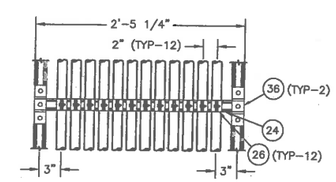

1 PIPE SPRT DETAIL
SCALE: 1 1/2"=1'-0"

DWG NUMBER	TITLE	REF NUMBER	TITLE
DRAWING TRACEABILITY LIST		REFERENCES	
		NEXT USED ON	

REV NO.	REV DATE	DESCRIPTION
0		INITIAL RELEASE INTO DMCS PER ECR-18-001444
REVISIONS		

BLDG. NO. 0000

INDEX NO. 0000

CAUTION
NOT COMPLETE WITHOUT CURRENT CHANGE DOCUMENTS FROM DATABASE

ATTENTION
DESTROY THIS DOCUMENT BY SHREDDING
MAY CONTAIN SENSITIVE INFORMATION

	NAME	DATE	COMPANY
DRAWN BY	SL RENZ	4/18/18	CHPRC
DRAWING CHECK			CHPRC
TECH. REVIEW	JG BODELLE		CHPRC
			CHPRC
DESIGN AUTHORITY	AL ESPARZA		CHPRC

U.S. DEPARTMENT OF ENERGY
Richland Operations Office

SAMPLE SYSTEM
TK-1 FILL SYS
STRUCT

SIZE F | DRAWING NUMBER H-3-317686 | SHEET 2 | REV 0

SCALE SHOWN

PLOTID

DOE_RL_F2003 (JAN 2012)

ECR-18-001444 PAGE 15

NOTES:

1. ALL THREADED PIPE CONNECTIONS SHALL USE TEFLON TAPE OR EQUIVALENT PRODUCT THAT IS COMPATIBLE WITH PIPING AND WATER AND APPROPRIATELY TIGHTENED
2. SEE THIS DETAIL-1, THIS SHEET FOR TYPICAL TUBING CONNECTION DETAIL
3. PVC PRIMER AND CEMENT SHALL BE USED IN ACCORDANCE WITH MANUFACTURER INSTRUCTIONS FOR ALL GLUED PVC JOINTS
4. SEE H-3-317681.2 FOR TOLERANCES.
5. SEE H-3-317686-8 FOR MATERIALS LIST.

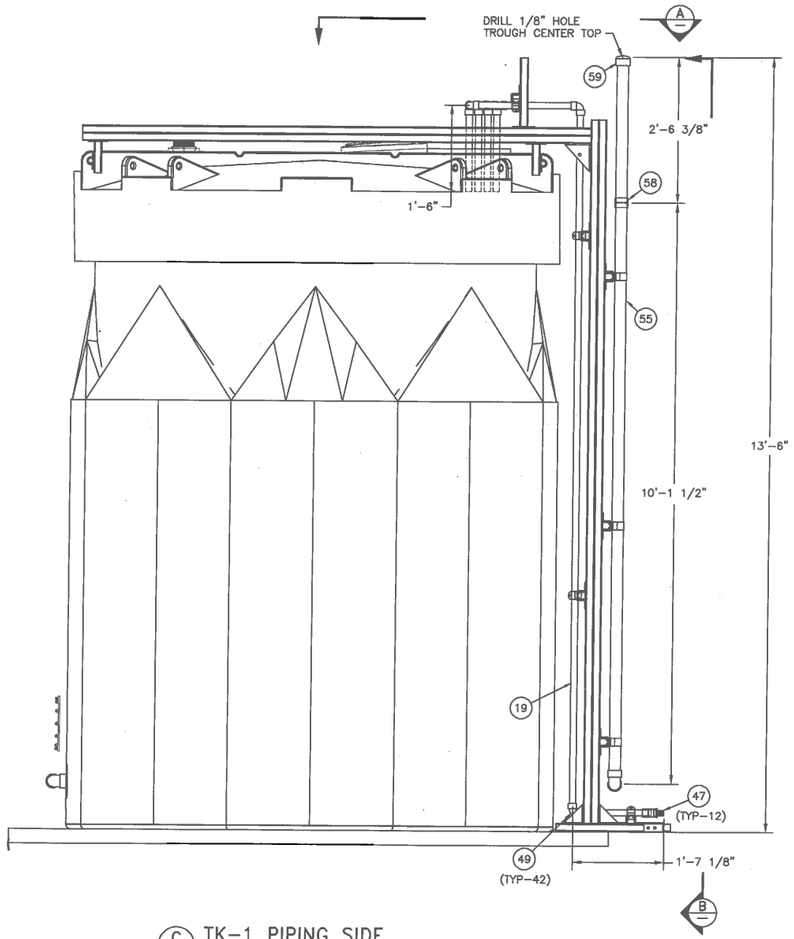

C TK-1 PIPING SIDE
H-3-317682-1 SCALE: 1"=1'-0"

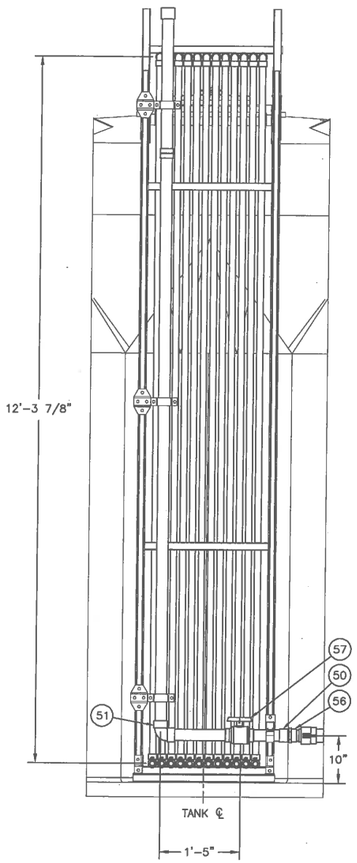

B TK-1 LEVEL IND FRONT
SCALE: 1"=1'-0"

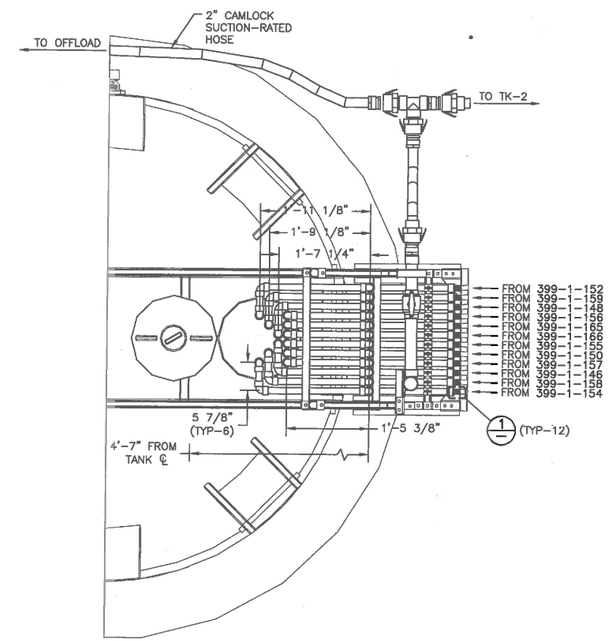

A TK-1 PIPING TOP
SCALE: 1"=1'-0"

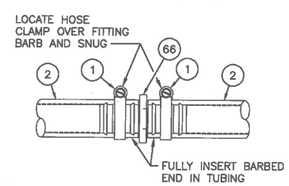

2 TYP HOSE SPLICE
SCALE: 6"=1'-0"

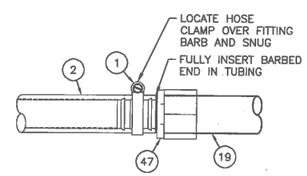

1 TYP TUBING & PIPE CONN
SCALE: 6"=1'-0"

DWG NUMBER	TITLE
DRAWING TRACEABILITY LIST	

REF NUMBER	TITLE
REFERENCES	
NEXT USED ON	

REV NO.	DESCRIPTION
0	INIDAL RELEASE INTO DMCS PER ECR-18-001444
REVISIONS	

BLDG. NO. 0000
SHEET NO. 0000

CAUTION
NOT COMPLETE WITHOUT CURRENT CHANGE DOCUMENTS FROM DATABASE

ATTENTION
DESTROY THIS DOCUMENT BY SHREDDING
MAY CONTAIN SENSITIVE INFORMATION

	NAME	DATE	COMPANY
DRAWN BY	JL RENZ	4/18/18	CHPRC
DRAFTING CHECK			CHPRC
ENGINEERING ANALYSIS	JG BIODELLE		CHPRC
			CHPRC
DESIGN AUTHORITY	JL ESPARZA		CHPRC

U.S. DEPARTMENT OF ENERGY
Richland Operations Office

SAMPLE SYSTEM
TK-1 FILL SYS
PIPE

SIZE F | DRAWING NUMBER H-3-317686 | SHEET 3 | REV 0
SCALE: SHOWN
PLOTID
DOE_TB_F.DWG (JAN 2012)

ECR-18-001444 PAGE 16

NOTES:

1. TORQUE 1/2"-16 STRUCTURAL BOLTS TO 50 FT/LBS.
2. SEE H-3-317681-2 FOR TOLERANCES.
3. SEE H-3-317686-8 FOR MATERIALS LIST.

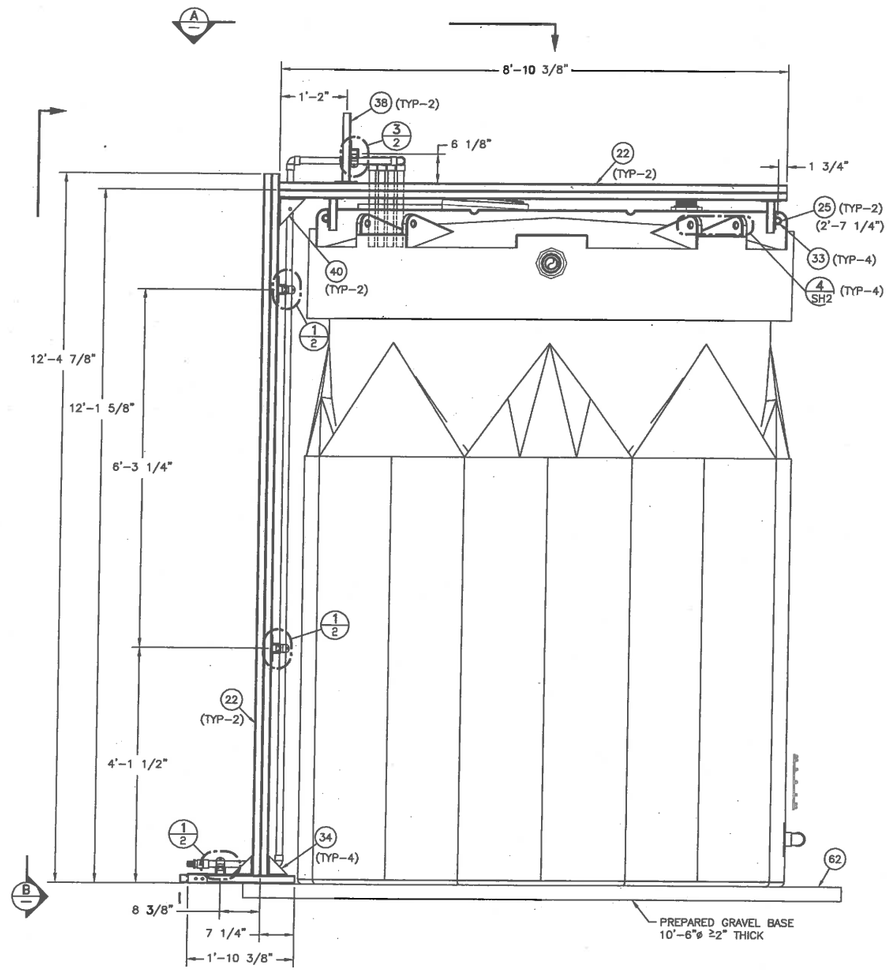

C TK-2 STRUCT SIDE
H-3-317681-2 SCALE: 1"=1'-0"

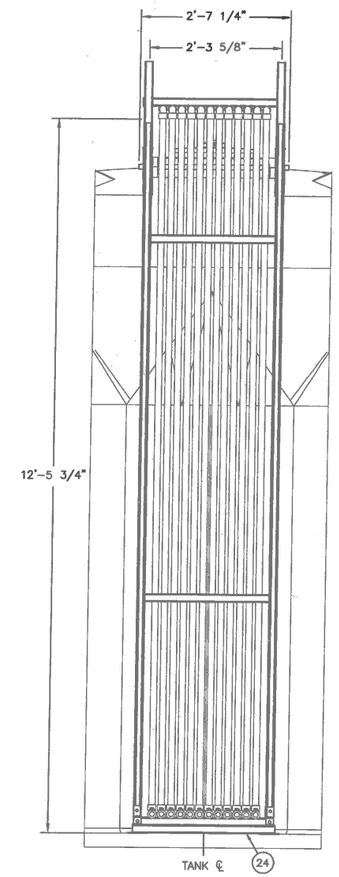

B TK-2 VIEW FRONT
SCALE: 1"=1'-0"

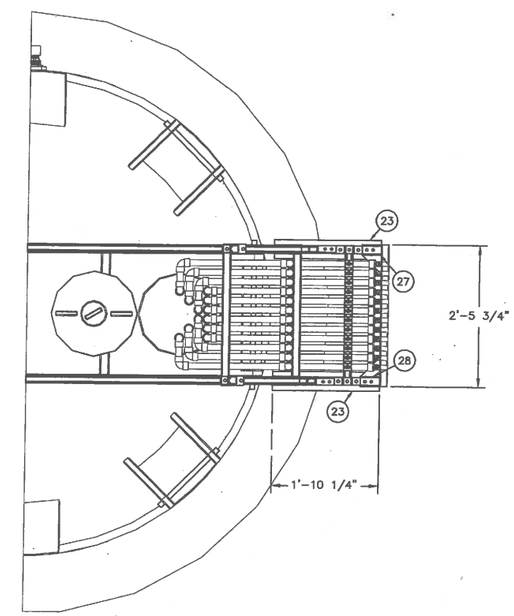

A TK-2 STRUCT TOP
SCALE: 1"=1'-0"

DWG NUMBER	TITLE
DRAWING TRACEABILITY LIST	

REF NUMBER	TITLE
REFERENCES	
NEXT USED ON	

REV NO.	DESCRIPTION
0	INITIAL RELEASE INTO DMCS PER ECR-18-001444
REVISIONS	

BLDG. NO. 0000

INDEX NO. 0000

CAUTION
NOT COMPLETE WITHOUT CURRENT CHANGE DOCUMENTS FROM DATABASE

ATTENTION
DESTROY THIS DOCUMENT BY SHREDDING MAY CONTAIN SENSITIVE INFORMATION

	NAME	DATE
DRAWN BY	SL RENZ	
CHECKED		
TECHNICALLY APPROVED	JG RIDDELLE	
DESIGN AUTHORITY	AL ESPARZA	

CHRG:

U.S. DEPARTMENT OF ENERGY
Richland Operations Office

SAMPLE SYSTEM
TK-2 FILL SYS
STRUCT

SIZE F | DRAWING NUMBER H-3-317686 | SHEET 4 | REV 0

SCALE 1" = 1'-0"

PLOTID

DOE_TB_F.DWG (JAN 2012)

ECR-18-001444 PAGE 17

NOTES:

1. ALL THREADED PIPE CONNECTIONS SHALL USE TEFLON TAPE OR EQUIVALENT PRODUCT THAT IS COMPATIBLE WITH PIPING AND WATER AND APPROPRIATELY TIGHTENED.
2. SEE H-3-317686-3 DETAIL-1, FOR TYPICAL TUBING CONNECTION DETAIL.
3. APPROVED PVC PRIMER AND CEMENT SHALL BE USED IN ACCORDANCE WITH MANUFACTURER INSTRUCTIONS FOR ALL GLUED PVC JOINTS.
4. SEE H-3-317681-2 FOR TOLERANCES.
5. SEE H-3-317686-8 FOR MATERIALS LIST.

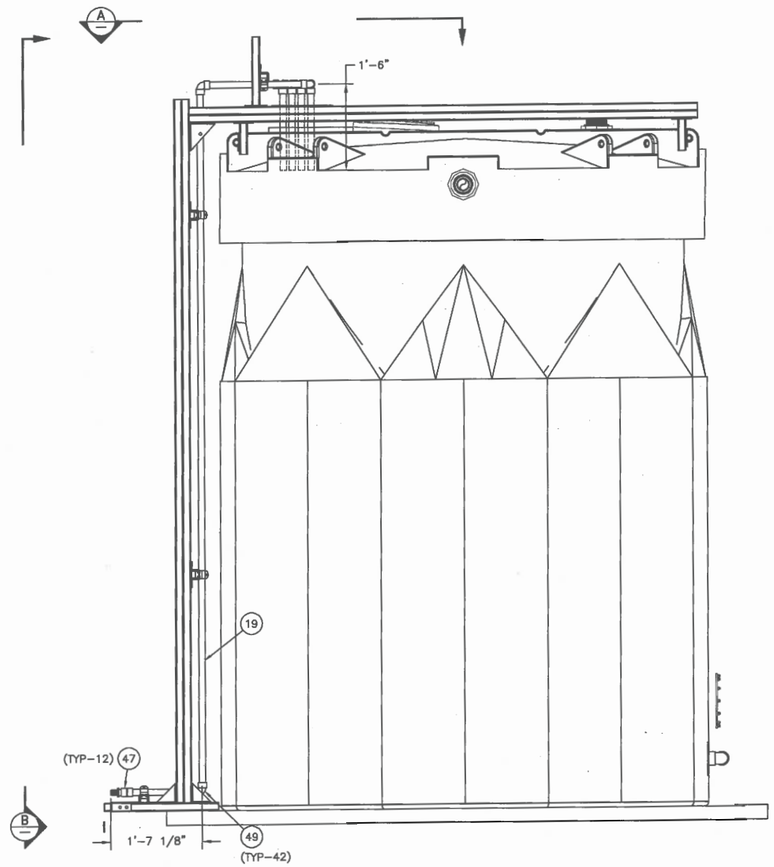

C TK-2 PIPING SIDE
H-3-317681-2 SCALE: 1"=1'-0"

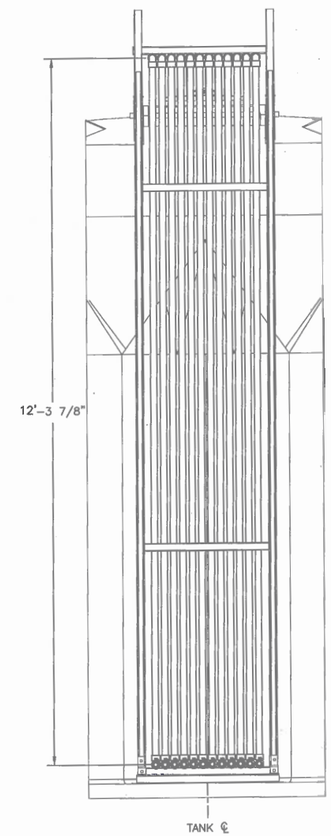

B TK-2 PIPING FRONT
SCALE: 1"=1'-0"

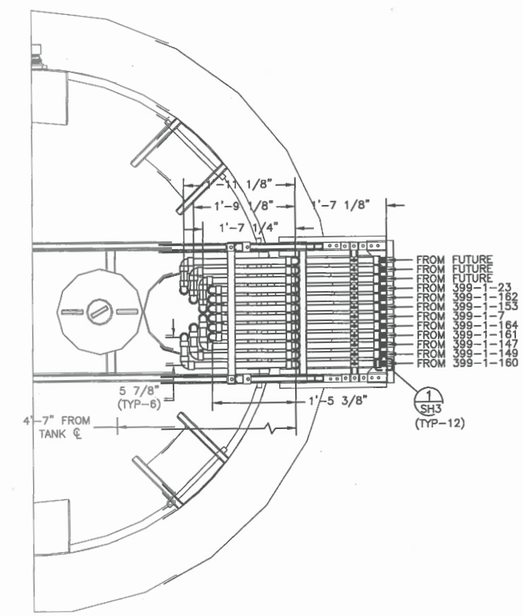

A TK-2 PIPING TOP
SCALE: 1"=1'-0"

DWG NUMBER	TITLE
DRAWING TRACEABILITY LIST	

REF NUMBER	TITLE
REFERENCES	
NEXT USED ON	

REV NO.	REV DEL.	DESCRIPTION
B		INITIAL RELEASE INTO DMCS PER ECR-18-001444
REVISIONS		

BLDG. NO. 0000

INDEX NO. 0000

CAUTION
NOT COMPLETE WITHOUT CURRENT CHANGE DOCUMENTS FROM DATABASE

ATTENTION
DESTROY THIS DOCUMENT BY SHREDDING MAY CONTAIN SENSITIVE INFORMATION

	NAME	DATE
DRAWN BY	SL RENZ	4/18/18
ENGINEERING REVIEWER	JG RIDDELLE	
DESIGN AUTHORITY	AL ESPARZA	

U.S. DEPARTMENT OF ENERGY
Richland Operations Office

SAMPLE SYSTEM
TK-2 FILL SYS
PIPE

SIZE F | DRAWING NUMBER H-3-317686 | SHEET 5 | REV 0

SCALE 1" = 1'-0"

PLOTID

DOE_7B_F.DWG (JAN 2012)

~~ECR-18-000692~~ PAGE 18
ECR-18-001444
b/s rvk per tdecon 8/28/18

NOTES:
1) SPILL CONTAINMENT SYSTEM IS OPTIONAL.
2) SEE H-3-317681-2 FOR TOLERANCES.
3) SEE H-3-317686-8 FOR MATERIALS LIST.

SYMBOL LEGEND:

FORK TRUCK LIFTING POINT- UNIT NOT DESIGNED TO BE LIFTED WITH BLOCK ANCHOR

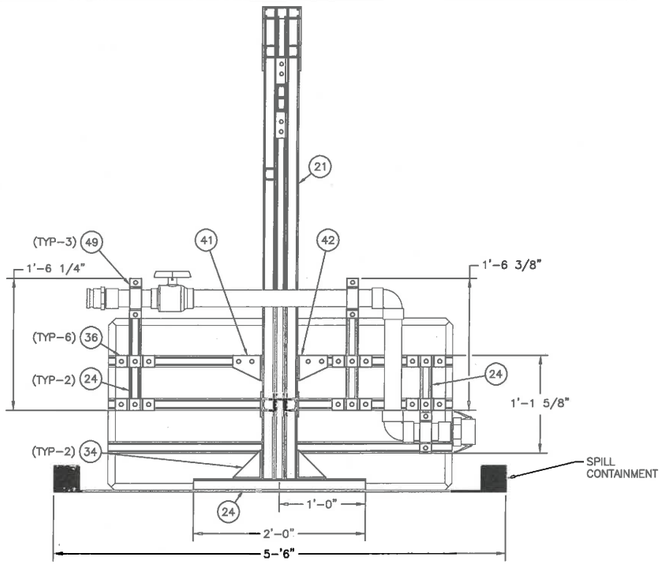

B RACK CONNECTION END
H-3-317681-2 SCALE: 1"=1'-0"

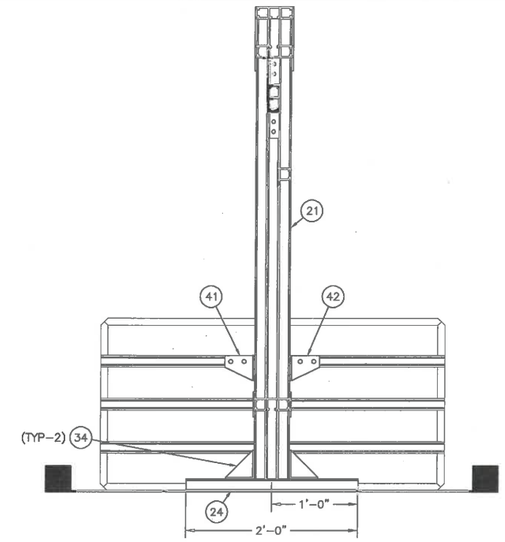

A RACK CONNECTION END
SCALE: 1"=1'-0"

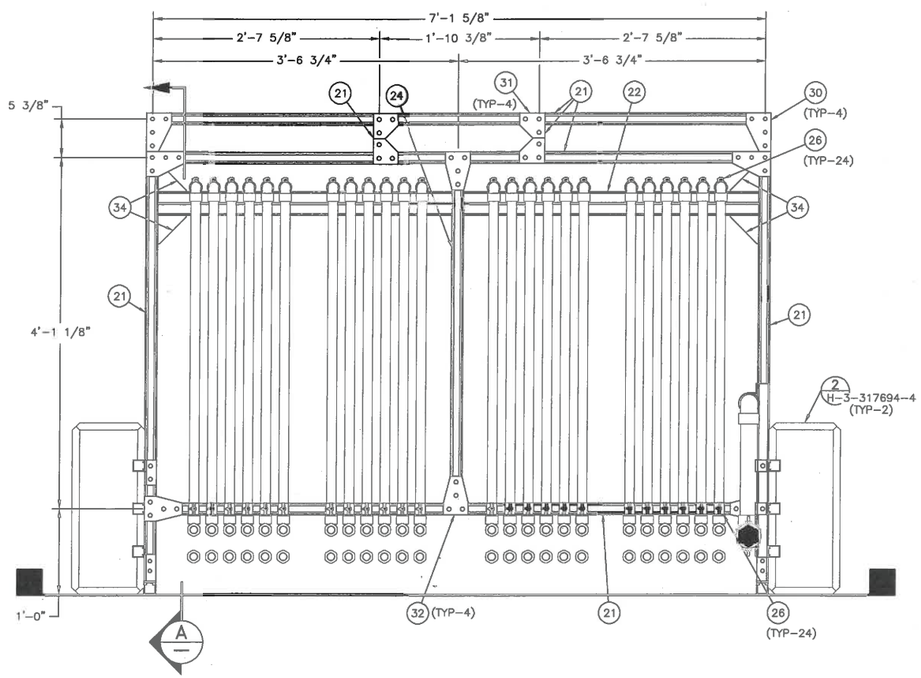

D SAMPLE RACK REAR
H-3-317681-2 SCALE: 1"=1'-0"

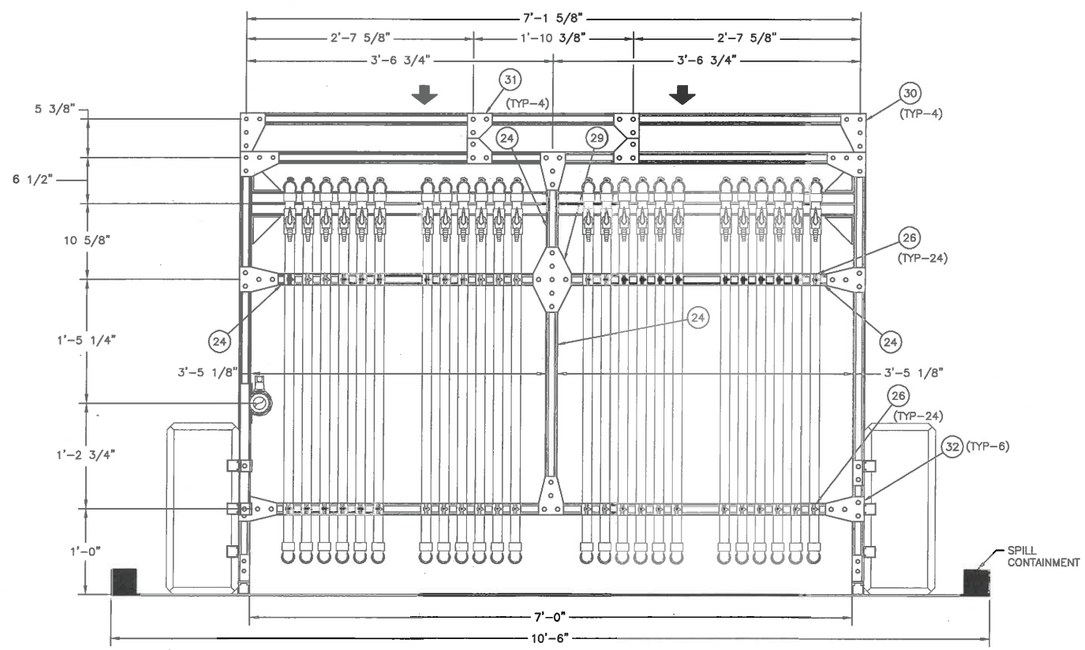

C SAMPLE RACK FRONT
H-3-317681-2 SCALE: 1"=1'-0"

DWG NUMBER	TITLE
DRAWING TRACEABILITY LIST	

REF NUMBER	TITLE
REFERENCES	
NEXT USED ON	

REV NO.	REV DA.	DESCRIPTION
0		INITIAL RELEASE INTO DMCS PER ECR-18-001444
REVISIONS		

BLDG. NO. 0000

INDEX NO. 0000

CAUTION
NOT COMPLETE WITHOUT CURRENT CHANGE DOCUMENTS FROM DATABASE

ATTENTION
DESTROY THIS DOCUMENT BY SHREDDING
MAY CONTAIN SENSITIVE INFORMATION

	NAME	DATE
DRAWN BY	SL RENZ	4/18/18
DRAFTING CHECK		CHPRC
ENGINEERING DESIGNED	JG RODELLE	CHPRC
ENGINEERING CHECK		CHPRC
DESIGN AUTHORITY	AL ESPARZA	CHPRC

U.S. DEPARTMENT OF ENERGY
Richland Operations Office

SAMPLE SYSTEM
SAMPLING STATION
STRUCT

SIZE F | DRAWING NUMBER H-3-317686 | SHEET 6 | REV 0

SCALE SHOWN

PLOTID

DOE_TB_F.DWG (JAN 2012)

ECR-18-001444 PAGE 19

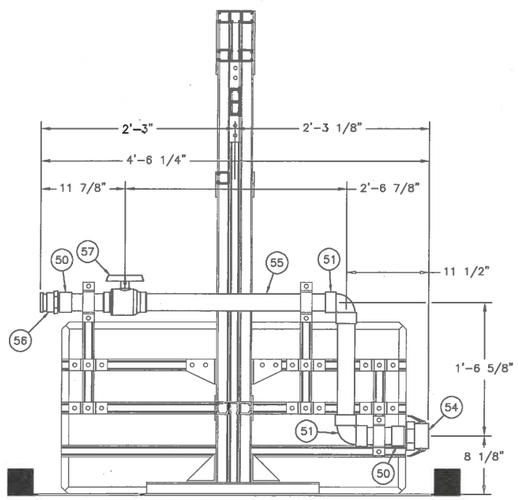

B SYSTEM DRAIN PIPING
H-3-317681-2 SCALE: 1 1/2"=1'-0"

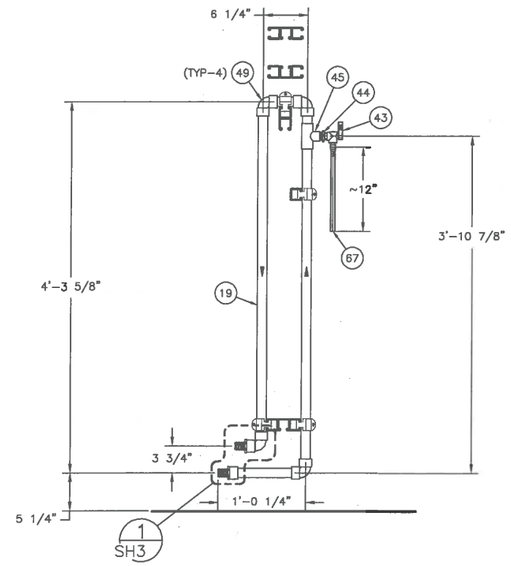

3 TYPICAL SAMPLE PIPE ROUTING
SCALE: 1 1/2"=1'-0"

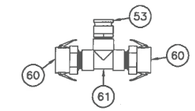

1 2" CAM & GROOVE TEE
H-3-317681-2 SCALE: 1 1/2"=1'-0"

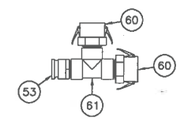

2 2" CAM & GROOVE TEE
H-3-317681-2 SCALE: 1 1/2"=1'-0"

NOTES:

1. ALL THREADED PIPE CONNECTIONS SHALL USE TEFLON TAPE OR EQUIVALENT PRODUCT THAT IS COMPATIBLE WITH PIPING AND WATER AND APPROPRIATELY TIGHTENED.
2. SEE H-3-317686-3 DET-1 FOR TYPICAL TUBING CONNECTION DETAIL.
3. PVC PRIMER AND CEMENT SHALL BE USED IN ACCORDANCE WITH MANUFACTURER INSTRUCTIONS FOR ALL GLUED PVC JOINTS.
4. SEE H-3-317681-2 FOR TOLERANCES.
5. SEE H-3-317686-8 FOR MATERIALS LIST.

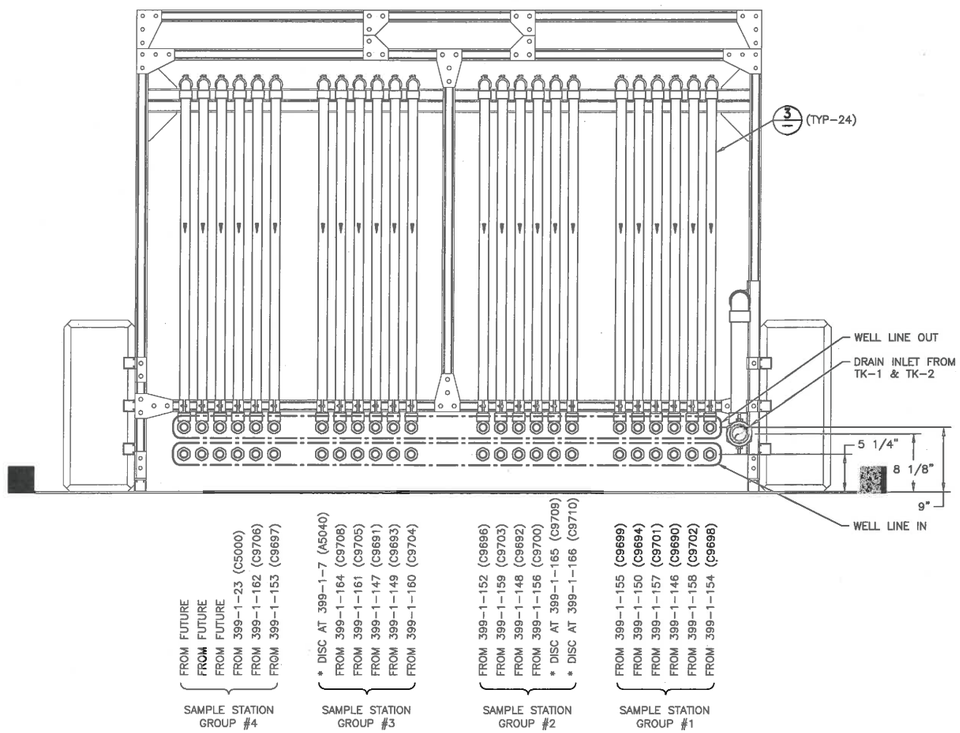

D SAMPLE RACK REAR
H-3-317681-2 SCALE: 1 1/2"=1'-0"

* LABEL "DISCONNECTED"

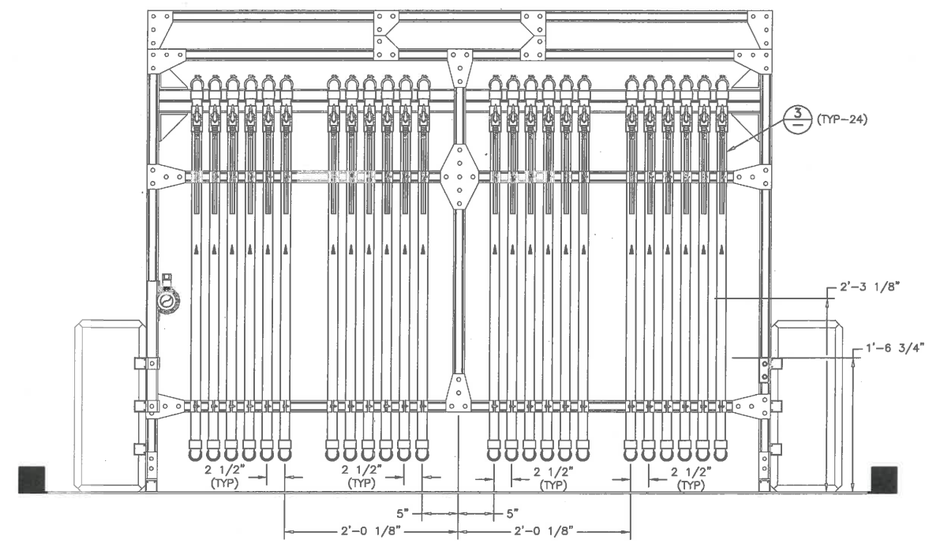

C SAMPLE RACK FRONT
H-3-317681-2 SCALE: 1 1/2"=1'-0"

DWG NUMBER	TITLE	REF NUMBER	TITLE
DRAWING TRACEABILITY LIST		NEXT USED ON	REFERENCES

REV REL	REV NO.	DESCRIPTION
	0	INITIAL RELEASE INTO DMCS PER ECR-18-001444

REVISIONS

BLDG. NO. 0000

INDEX NO. 0000

CAUTION
NOT COMPLETE WITHOUT CURRENT CHANGE DOCUMENTS FROM DATABASE

ATTENTION
DESTROY THIS DOCUMENT BY SHREDDING MAY CONTAIN SENSITIVE INFORMATION

	NAME	DATE	COMPANY
DRAWN BY	SL RENZ	4/18/18	CH2M
ENGINEERING CHANGE	JG RIDDELLE		CH2M
DESIGN AUTHORITY	AL ESPARZA		CH2M

U.S. DEPARTMENT OF ENERGY
Richland Operations Office

SAMPLE SYSTEM
SAMPLING STATION
PIPE

SIZE F | DRAWING NUMBER H-3-317686 | SHEET 7 | REV 0

CHPRC SCALE SHOWN

PLOTID

DOE_TB_F.DWG (JAN 2012)

ECR-18-001444 PAGE 20

PARTS & MATERIALS LIST

QTY REQD -020	QTY REQD -010	PARTS / DASH NUMBERS	NOMENCLATURE/ DESCRIPTION	MATERIAL/ REFERENCE	SHEET	ITEM NO
–	–	–	–	–	–	120
–	–	–	–	–	–	121
–	–	–	–	–	–	122
–	–	–	–	–	–	123
–	–	–	–	–	–	124
–	–	–	–	–	–	125
–	–	–	–	–	–	126
–	–	–	–	–	–	127
–	–	–	–	–	–	128
–	–	–	–	–	–	129
–	–	–	–	–	–	130
–	–	–	–	–	–	131
–	–	–	–	–	–	132
–	–	–	–	–	–	133
–	–	–	–	–	–	134
–	–	–	–	–	–	135
–	–	–	–	–	–	136
–	–	–	–	–	–	137
–	–	–	–	–	–	138
–	–	–	–	–	–	139
–	–	–	–	–	–	140
–	–	–	–	–	–	141
–	–	–	–	–	–	142
–	–	–	–	–	–	143
–	–	–	–	–	–	144
–	–	–	–	–	–	145
–	–	–	–	–	–	146
–	–	–	–	–	–	147
–	–	–	–	–	–	148
–	–	–	–	–	–	149
–	–	–	–	–	–	150
–	–	–	–	–	–	151
–	–	–	–	–	–	152
–	–	–	–	–	–	153
–	–	–	–	–	–	154
–	–	–	–	–	–	155
–	–	–	–	–	–	156
–	–	–	–	–	–	157
–	–	–	–	–	–	158
–	–	–	–	–	–	159

PARTS & MATERIALS LIST

QTY REQD -020	QTY REQD -010	PARTS / DASH NUMBERS	NOMENCLATURE/ DESCRIPTION	MATERIAL/ REFERENCE	SHEET	ITEM NO
–	–	–	–	–	–	80
–	–	–	–	–	–	81
–	–	–	–	–	–	82
–	–	–	–	–	–	83
–	–	–	–	–	–	84
–	–	–	–	–	–	85
–	–	–	–	–	–	86
–	–	–	–	–	–	87
–	–	–	–	–	–	88
–	–	–	–	–	–	89
–	–	–	–	–	–	90
–	–	–	–	–	–	91
–	–	–	–	–	–	92
–	–	–	–	–	–	93
–	–	–	–	–	–	94
–	–	–	–	–	–	95
–	–	–	–	–	–	96
–	–	–	–	–	–	97
–	–	–	–	–	–	98
–	–	–	–	–	–	99
–	–	–	–	–	–	100
–	–	–	–	–	–	101
–	–	–	–	–	–	102
–	–	–	–	–	–	103
–	–	–	–	–	–	104
–	–	–	–	–	–	105
–	–	–	–	–	–	106
–	–	–	–	–	–	107
–	–	–	–	–	–	108
–	–	–	–	–	–	109
–	–	–	–	–	–	110
–	–	–	–	–	–	111
–	–	–	–	–	–	112
–	–	–	–	–	–	113
–	–	–	–	–	–	114
–	–	–	–	–	–	115
–	–	–	–	–	–	116
–	–	–	–	–	–	117
–	–	–	–	–	–	118
–	–	–	–	–	–	119

PARTS & MATERIALS LIST

QTY REQD -020	QTY REQD -010	PARTS / DASH NUMBERS	NOMENCLATURE/ DESCRIPTION	MATERIAL/ REFERENCE	SHEET	ITEM NO
–	4	B888W	B–LINE B888W GALV UNIVERSAL SHELF BRACKET, WELDED	–	–	40
–	2	B234R	B–LINE FOUR HOLE (RIGHT HAND) CORNER GUSSET	–	–	41
–	2	B234L	B–LINE FOUR HOLE (LEFT HAND) CORNER GUSSET	–	–	42
–	24	–	BALL VALVE 1/4" MNPT X BARB PVC 90°	–	–	43
–	24	2PMJ4	1/2" MNPT X 1/4" FNPT PVC REDUCING BUSHING	GRAINGER	–	44
–	24	22FK83	1" SOCKET X 1/2" FNPT PVC REDUCING TEE	GRAINGER	–	45
–	–	–	NOT USED	–	–	46
–	72	474–010G	1" SOCKET X BARB ADAPTER	LASCO	–	47
–	24	22FJ85	1" ELBOW– STREET, SPIGOT X SOCKET	GRAINGER	–	48
–	156	–	1" SOCKET X SOCKET 90° ELBOW	–	–	49
–	3	436–020L	2" MNPT X SOCKET CLEAR PVC ADAPTER	SPEARS	–	50
–	3	406–020L	2" SOCKET X SOCKET CLEAR PVC 90° ELBOW	SPEARS	–	51
–	2	807–020	2" SOCKET X FNPT GRAY SCH–80 PVC 90°	GRAINGER	–	52
–	4	1DPP2	2" MNPT X CAM & GROOVE POLYPROPYLENE, TYPE–F	GRAINGER	–	53
–	1	1DPN8	2" FNPT X CAM & GROOVE POLYPROPYLENE TYPE–D	GRAINGER	–	54
–	2	PL–020	2" X 10' TRANSLUCENT PVC PIPE	SPEARS	–	55
–	2	1DPN4	2" FNPT X CAM & GROOVE POLYPROPYLENE, TYPE–A	GRAINGER	–	56
–	2	20RK14	2" SOCKET X SOCKET GRAY PVC COMPACT BALL VALVE	GRAINGER	–	57
–	1	429–020L	2" SOCKET X SOCKET CLEAR PVC COUPLER	SPEARS	–	58
–	1	447–020L	2" PVC SOCKET CLEAR PVC CAP	SPEARS	–	59
–	4	1DPN5	2" MNPT X CAM & GROOVE POLYPROPYLENE, TYPE–B	GRAINGER	–	60
–	2	6NF98	2" FNPT X FNPT X FNPT GRAY SCH–80 PVC TEE	GRAINGER	–	61
–	1	–	1 1/2 YARDS SAND SPREAD OVER 2 TANK BASE	–	–	62
–	400	N228	B–LINE, B22 SPRING NUT 1/2–16	UNKNOWN	–	63
–	1	38WR58	1/2–16 X 1–1/4" LONG HEX HEAD CAP SCREW STRUT BOLTS 450/PKG	GRAINGER	–	64
–	3	49EV03	1–9/16 X 1/4" LYNCH PIN	GRAINGER	–	65
–	60	3ELF3	1" BARBED COUPLING PVC GRAY SPEARS	GRAINGER	–	66
–	1	4VUR7	PVC TUBING SAE 1/2" ID 5/8" OD 50'/ROLL	GRAINGER	–	67
–	1	29FJ04	OATEY HEAVY DUTY CLEAR PVC CEMENT 16OZ *HAZMAT*	GRAINGER	–	68
–	1	39AN84	OATEY CLEAR PRIMER FOR PVC *HAZMAT*	GRAINGER	–	69
–	–	–	–	–	–	70
–	–	–	–	–	–	71
–	–	–	–	–	–	72
–	–	–	–	–	–	73
–	–	–	–	–	–	74
–	–	–	–	–	–	75
–	–	–	–	–	–	76
–	–	–	–	–	–	77
–	–	–	–	–	–	78
–	–	–	–	–	–	79

PARTS & MATERIALS LIST

QTY REQD -020	QTY REQD -010	PARTS / DASH NUMBERS	NOMENCLATURE/ DESCRIPTION	MATERIAL/ REFERENCE	SHEET	ITEM NO
–	40	5CYZ8	HOSE CLAMP 10/PKG 301SST. 3/4" – 2 1/4"	GRAINGER	–	1
–	64	4HM07	1" ID PVC TUBING 100'/ROLL 125 PSI @70°F	GRAINGER	–	2
–	24	5357K48	1" BARB X MNPT ALUMINUM	MCMASTER–CARR	–	3
–	24	5P846	1" NPT GALV TEE	GRAINGER	–	4
–	24	1MPL7	1" NPT GALV PLUG	GRAINGER	–	5
–	48	25CG61	3/4" X 1" GALV REDUCER BUSHING	GRAINGER	–	6
–	24	6P804	3/4" X CLOSE GALV NIPPLE	GRAINGER	–	7
–	72	2KME9	3/4" GALV COUPLER	GRAINGER	–	8
–	72	?	3/4" GALV PIPE, 20' LENGTH	UNKNOWN	–	9
–	24	5SQE05–90	GRUNDFOSS SUBMERSIBLE PUMP	GRAINGER	–	10
–	24	N/A	LANDING PLATE, CUSTOM, SEE H–3–317686 SH–1, DET–1	CUSTOM	–	11
–	5	–	ECO–BLOCK	UNKNOWN	–	12
–	1	–	7' X 2"ø, MALE/FEMALE CAM & GROOVE, SUCTION–RATED HOSE	UNKNOWN	–	13
–	1	–	3' X 2"ø, MALE/FEMALE CAM & GROOVE, SUCTION–RATED HOSE	UNKNOWN	–	14
–	1	–	9' X 2"ø, MALE/FEMALE CAM & GROOVE, SUCTION–RATED HOSE	UNKNOWN	–	15
–	1	–	7' X 2"ø, MALE/FEMALE CAM & GROOVE, SUCTION–RATED HOSE	UNKNOWN	–	16
–	1	–	5' X 2"ø, MALE/FEMALE CAM & GROOVE, SUCTION–RATED HOSE	UNKNOWN	–	17
–	7	–	RATCHET STRAP, MIN 1–1/2" WIDTH 1000 LB WORKING LOAD	UNKNOWN	–	18
–	31	–	1" SCH–80 PVC PIPE, 20' LENGTHS	UNKNOWN	–	19
–	2	PL–020	2" X 10' TRANSLUCENT PVC PIPE	SPEARS	–	20
–	2	B22D3	B–LINE B22D3 GALV STRUT 20' LENGTH	–	–	21
–	6	B22A	B–LINE B22A GALV STRUT 20' LENGTH	–	–	22
–	1	B22PL	B–LINE B22PL GALV STRUT 10' LENGTH	–	–	23
–	3	B22	B–LINE B22 GALV STRUT 20' LENGTH	–	–	24
–	2	–	1"ø GALV ROUND–BAR, 20' LENGTH	–	–	25
–	192	B2010	B–LINE 1.375"OD GALV PIPE CLAMP	–	–	26
–	2	B274R	B–LINE B274R GALV EIGHT–HOLE SINGLE CORNER GUSSETED CONN	–	–	27
–	2	B274L	B–LINE B274L GALV EIGHT–HOLE SINGLE CORNER GUSSETED CONN	–	–	28
–	1	B334	B–LINE B334 GALV SEVEN–HOLE CROSS GUSSET PLATE	–	–	29
–	12	B142	B–LINE B142 GALV 4–HOLE CORNER GUSSET PLATE	–	–	30
–	9	B135	B–LINE B135 GALV THREE–HOLE CORNER GUSSET PLATE	–	–	31
–	8	B136	B–LINE B136 GALV FOUR–HOLE TEE GUSSET PLATE	–	–	32
–	8	B2400–3/4	B–LINE B2400–3/4 ZINC PIPE STRAP	–	–	33
–	16	B844W	B–LINE B844W GALV UNIVERSAL SHELF BRACKET, WELDED	–	–	34
–	3	B425	B–LINE B425 GALV SIX–HOLE U–SUPPORT	–	–	35
–	22	B107	B–LINE B107 GALV FIVE–HOLE U–SUPPORT	–	–	36
–	7	B2400–3	B–LINE B2400–2 ZINC PIPE STRAP	–	–	37
–	4	B409–18	B–LINE B409–18 GALV SINGLE CHANNEL BRACKET	–	–	38
–	1	B409–6	B–LINE B409–6 GALV SINGLE CHANNEL BRACKET	–	–	39

NOTES:

1. ALL MATERIALS SHALL BE AS LISTED OR ENGINEERING APPROVED EQUAL.
2. CAMLOCK FITTINGS SHALL BE GALVANIZED, ALUMINUM, OR ENGINEERING APPROVED EQUAL.

DWG NUMBER	TITLE
DRAWING TRACEABILITY LIST	

REF NUMBER	TITLE
REFERENCES	
NEXT USED ON SHEET 1	

REV NO.	DESCRIPTION
0	INITIAL RELEASE PER ECR–18–001444

REVISIONS

BLDG. NO. 00000

INDEX NO. 0000

CAUTION
NOT COMPLETE WITHOUT CURRENT CHANGE DOCUMENTS FROM DATABASE

ATTENTION
DESTROY THIS DOCUMENT BY SHREDDING MAY CONTAIN SENSITIVE INFORMATION

	NAME	DATE	COMPANY
DRAWN BY	SL RENZ	4/16/18	CHPRC
ENGINEERING APPROVED	JG RODELLE		CHPRC
DESIGN AUTHORITY	AL ESPARZA		CHPRC

U.S. DEPARTMENT OF ENERGY
Richland Operations Office

SAMPLE SYSTEM MATERIALS LIST

SIZE F | DRAWING NUMBER H–3–317686 | SHEET 8 | REV 0

SCALE NONE

PILOTID

DOE_TB_F.DWG (JAN 2012)

ECR–18–001444 PAGE 21

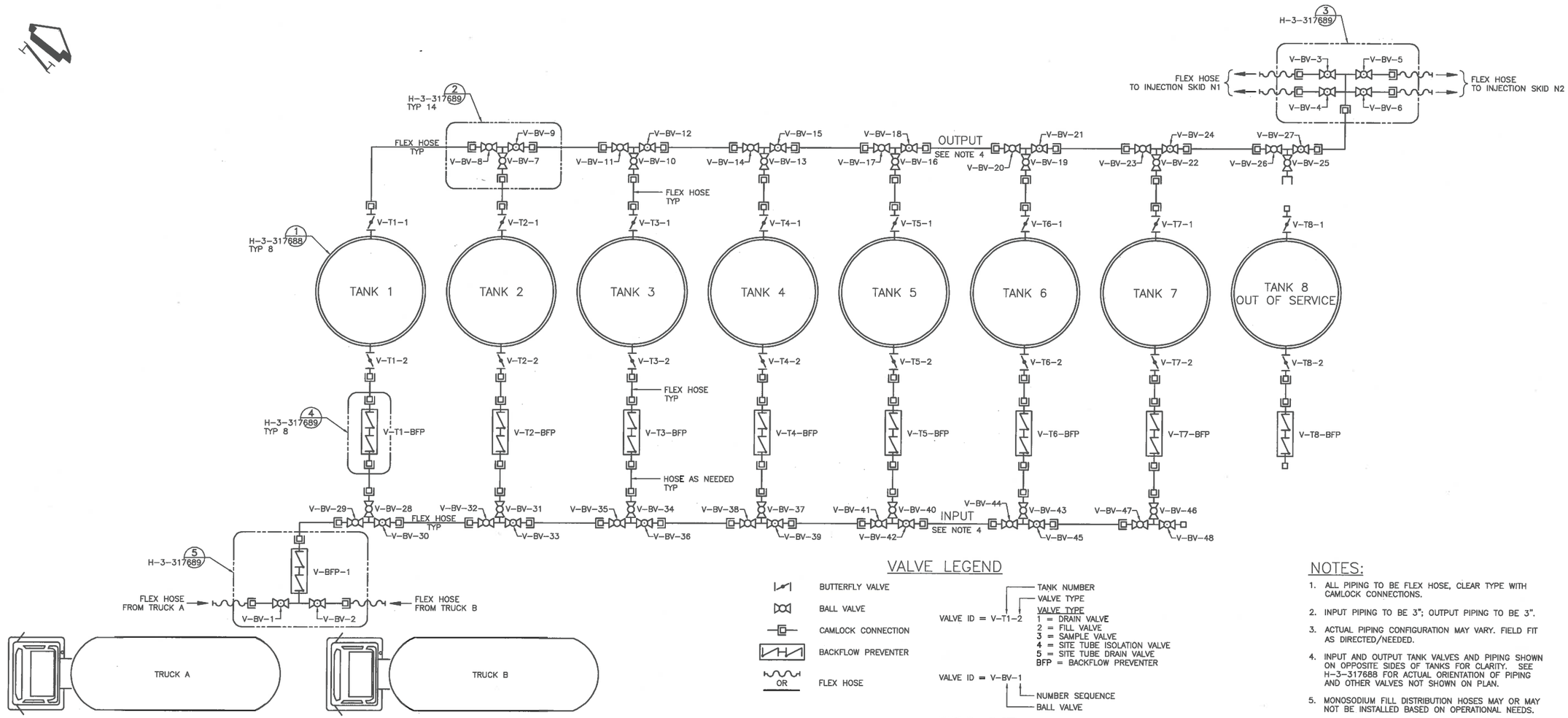

VALVE LEGEND

- BUTTERFLY VALVE
- BALL VALVE
- CAMLOCK CONNECTION
- BACKFLOW PREVENTER
- FLEX HOSE (OR)

VALVE ID = V-T1-2
- TANK NUMBER
- VALVE TYPE

VALVE TYPE
- 1 = DRAIN VALVE
- 2 = FILL VALVE
- 3 = SAMPLE VALVE
- 4 = SITE TUBE ISOLATION VALVE
- 5 = SITE TUBE DRAIN VALVE
- BFP = BACKFLOW PREVENTER

VALVE ID = V-BV-1
- NUMBER SEQUENCE
- BALL VALVE

VALVE ID = V-BFP-1
- NUMBER SEQUENCE
- BACKFLOW PREVENTER

NOTES:

1. ALL PIPING TO BE FLEX HOSE, CLEAR TYPE WITH CAMLOCK CONNECTIONS.
2. INPUT PIPING TO BE 3"; OUTPUT PIPING TO BE 3".
3. ACTUAL PIPING CONFIGURATION MAY VARY. FIELD FIT AS DIRECTED/NEEDED.
4. INPUT AND OUTPUT TANK VALVES AND PIPING SHOWN ON OPPOSITE SIDES OF TANKS FOR CLARITY. SEE H-3-317688 FOR ACTUAL ORIENTATION OF PIPING AND OTHER VALVES NOT SHOWN ON PLAN.
5. MONOSODIUM FILL DISTRIBUTION HOSES MAY OR MAY NOT BE INSTALLED BASED ON OPERATIONAL NEEDS.
6. SEE NOTE 3, DWG H-3-317678-1.
7. CHEMICAL HOSE TO BE CLEAR, VACUUM RATED AT 28 IN/hg.

CHEMICAL TANK PLAN

SCALE: NONE

DWG NUMBER	TITLE
DRAWING TRACEABILITY LIST	

REF NUMBER	TITLE
H-3-317677-1	DRAWING LIST
REFERENCES	
NEXT USED ON	

REV NO.	REV REL.	DESCRIPTION
0		INITIAL RELEASE INTO DMCS PER ECR-18-001444
REVISIONS		

BLDG. NO. 300G

INDEX NO. 8000

CAUTION
NOT COMPLETE WITHOUT CURRENT CHANGE DOCUMENTS FROM DATABASE

ATTENTION
DESTROY THIS DOCUMENT BY SHREDDING MAY CONTAIN SENSITIVE INFORMATION

	NAME	DATE
DRAWN BY	DL DEATON	2/5/97
REVIEW BY	SL REND	
REVIEW BY	RW WHITLOCK	
REVIEW BY	JC RIDDELLE	
DESIGN AUTHORITY	RW WHITLOCK	

U.S. DEPARTMENT OF ENERGY
Richland Operations Office

CHEMICAL INJECTION SYSTEM
MECHANICAL
CHEMICAL TANK PLAN

SIZE F | DRAWING NUMBER H-3-317687 | SHEET 1 | REV 0

SCALE SHOWN

PLOTID

DOE_TB_F.DWG (JAN 2012)

ECR-18-001444 PAGE 22

NOTES:

1. TORQUE VALUE FOR FIBERGLASS TANK FLANGES EQUALS 25–30 FT LBS MAX.
2. WEIGHT OF TANK (EMPTY) ≤ 3,000 LBS.

VALVE LEGEND

VALVE ID = V–T1–2

- TANK NUMBER
- VALVE TYPE

VALVE TYPE
1 = DRAIN VALVE
2 = FILL VALVE
3 = SAMPLE VALVE
4 = SITE TUBE ISOLATION VALVE
5 = SITE TUBE DRAIN VALVE

TANK VOLUMES	
LEVEL (ft)	TOTAL (gal)
1.0	25
2.0	209
3.0	538
3.5	831
4.0	1124
4.5	1417
5.0	1710
5.5	2003
6.0	2296
6.5	2589
7.0	2882
7.5	3175
8.0	3468
8.5	3761
9.0	4054
9.5	4347
10.0	4640
10.5	4933
11.0	5226
11.5	5519
12.0	5812
12.5	6105
13.0	6398
13.5	6691
14.0	6984
14.5	7277
15.0	7570
15.5	7863
16.0	8156

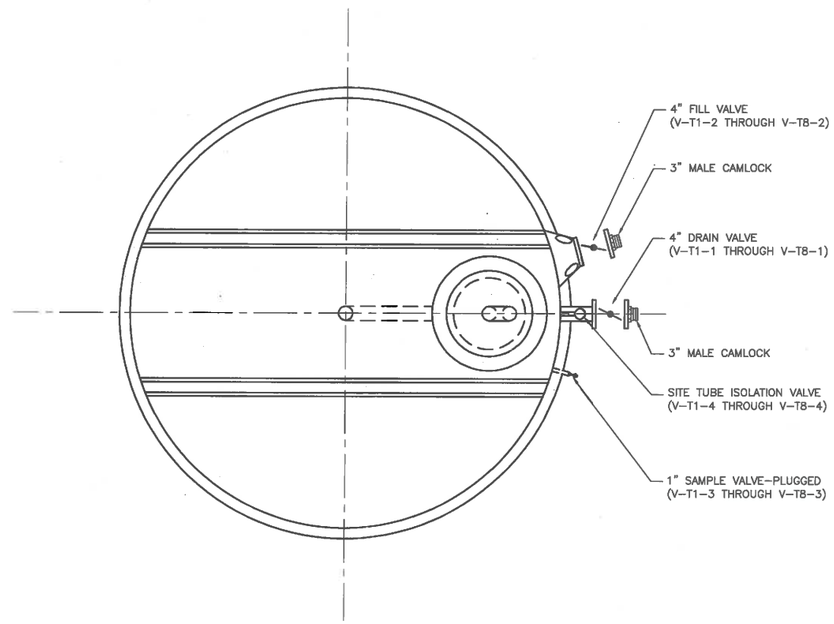

TYPICAL TANK PLAN VIEW

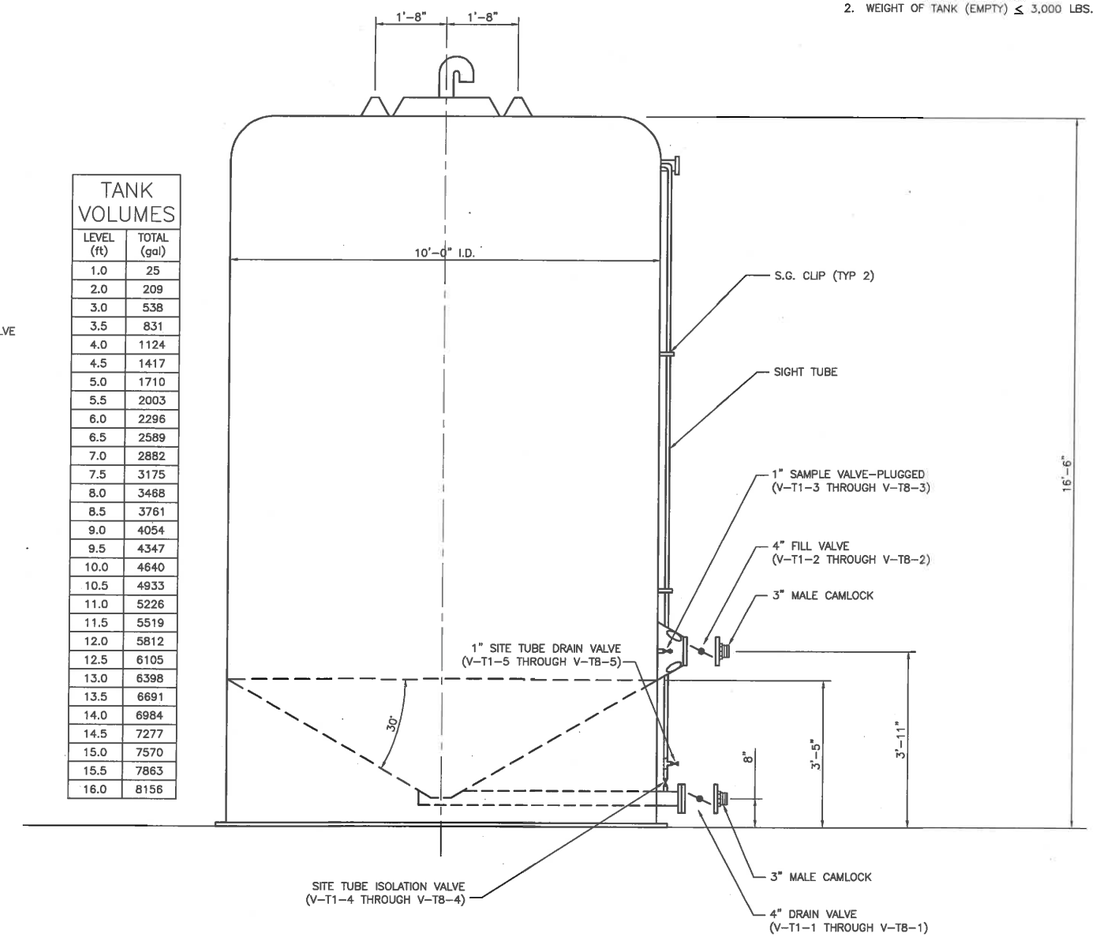

TYPICAL TANK ELEVATION

1 CHEMICAL TANK DETAIL
H–3–317687 SCALE: 3/4"=1'–0"

DWG NUMBER	TITLE
DRAWING TRACEABILITY LIST	

REF NUMBER	TITLE
H–3–317677–1	DRAWING LIST
REFERENCES	
NEXT USED ON	

REV REL	REV NO.	DESCRIPTION
	0	INITIAL RELEASE INTO DMCS PER ECR–18–001444
REVISIONS		

BLDG. NO. 300G

INDEX NO. 8000

CAUTION
NOT COMPLETE WITHOUT CURRENT CHANGE DOCUMENTS FROM DATABASE

ATTENTION
DESTROY THIS DOCUMENT BY SHREDDING
MAY CONTAIN SENSITIVE INFORMATION

	NAME	DATE	COMPANY
DRAWN BY	DL DEATON	2/9/07	CH2MHC
REVIEW BY	SD REND		CH2MHC
DESIGN AUTHORITY	RW WHITLOCK		CH2MHC
PROJECT ENGINEER	JC RIDDELLE		CH2MHC
DESIGN AUTHORITY	RW WHITLOCK		CH2MHC

U.S. DEPARTMENT OF ENERGY
Richland Operations Office

CHEMICAL INJECTION SYSTEM
MECHANICAL
CHEMICAL TANK DETAILS

SIZE F | DRAWING NUMBER H–3–317688 | SHEET 1 | REV 0

SCALE SHOWN

PLOTID

DOE_TB_F.DWG (JAN 2012)

ECR–18–001444 PAGE 23

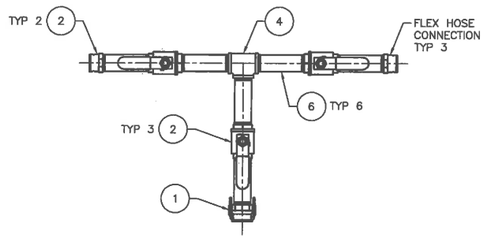

2 DETAIL
H-3-317687 SCALE: 1"=1'-0"

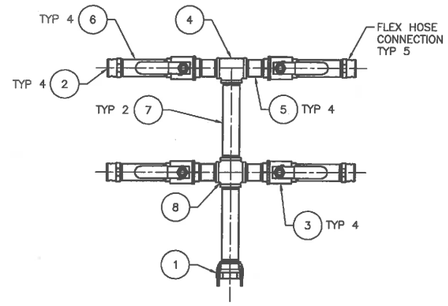

3 DETAIL
H-3-317687 SCALE: 1"=1'-0"

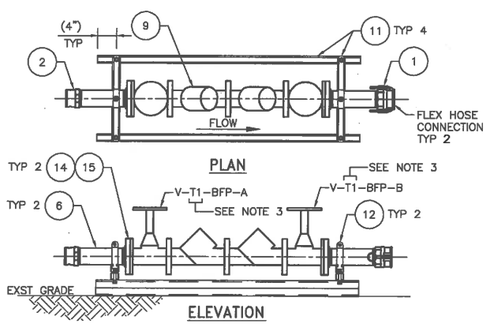

4 DETAIL
H-3-317687 SCALE: 1"=1'-0"

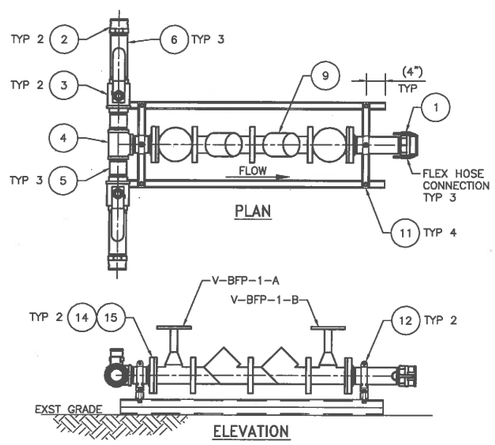

5 DETAIL
H-3-317687 SCALE: 1"=1'-0"

PARTS LIST/MATERIAL LIST

QTY	PART/CATALOG NO.	DESCRIPTION	MANUFACTURER/ DISTRIBUTOR	ITEM NO.
24	51415K27	CAMLOCK, FEMALE, 3", FNPT	McMASTER-CARR	1
42	51415K57	CAMLOCK, MALE, 3", FNPT	McMASTER-CARR	2
48	1CKDB (CAT. #4002)	BALL VALVE, 3", FNPT, BRASS	APOLLO/GRAINGER	3
16	2WJ21 (CAT. #3869)	TEE, 3", GALV, FNPT	GRAINGER	4
7	2WV46	NIPPLE, 3", GALV, 6" LG, THREADED BOTH ENDS	GRAINGER	5
107	2WV49	NIPPLE, 3", GALV, 12" LG, THREADED BOTH ENDS	GRAINGER	6
2	4499K122	NIPPLE, 3", GALV, 18" LG, THREADED BOTH ENDS	McMASTER-CARR	7
1	2WJ42	CROSS, 3", GALV, FNPT	GRAINGER	8
9	0122786	BACKFLOW PREVENTER, 3" DOUBLE CHECK VALVE, FLANGED 3LF709-OSY	WATTS	9
–		NOT USED		10
36	B22A H178 GALV	DOUBLE CHANNEL, 3-1/4" X 1-5/8", LENGTH AS REQD, GALV W/ H178 HOLE PATTERN W/ ASSOCIATED HARDWARE	B-LINE	11
18	B2015ZN	PIPE CLAMP, 3", ZINC FINISH	B-LINE	12
–		NOT USED		13
18	7551K127	FLANGE, 3", GALV, CLASS 150, THREADED	McMASTER-CARR	14
3	9774K48	GASKET, FOR 3" PIPE FLANGE, 1/8" THICK, RED RUBBER (SBR) 75 ±5 DUROMETER (QTY 6 PER PACKAGE)	McMASTER-CARR	15

NOTES:

1. ALL PARTS ARE AS LISTED OR ENGINEERING APPROVED EQUAL.
2. ALL PIPE AND CAMLOCK FITTINGS MAY BE ALUMINUM, GALVANIZED OR ENGINEERING APPROVED EQUAL.
3. VALUE VARIES FROM T1 THROUGH T8 DEPENDING ON TANK NUMBER.

ECR-18-001444 PAGE 24

DWG NUMBER	TITLE
DRAWING TRACEABILITY LIST	

REF NUMBER	TITLE
H-3-317677-1	DRAWING LIST
NEXT USED ON	REFERENCES

REV NO.	DESCRIPTION
0	INITIAL RELEASE INTO DMCS PER ECR-18-001444

REVISIONS

BLDG. NO. 300G

INDEX NO. 8000

CAUTION
NOT COMPLETE WITHOUT CURRENT CHANGE DOCUMENTS FROM DATABASE

ATTENTION
DESTROY THIS DOCUMENT BY SHREDDING MAY CONTAIN SENSITIVE INFORMATION

	NAME	DATE
DRAWN BY	SL RENZ	4/21/09
DRAFTS STANDARD		CHKRD
		CHKRD
ENGINEERING MANAGER	JG RUDELLE	CHKRD
DESIGN AUTHORITY	AL ESPARZA	CHKRD

U.S. DEPARTMENT OF ENERGY
Richland Operations Office

CHEMICAL INJECTION SYSTEM
MECHANICAL
CHEMICAL PIPING DETAILS

SIZE F | DRAWING NUMBER H-3-317689 | SHEET 1 | REV 0

SCALE SHOWN

PLOTID

DOE_TB_F.DWG (JAN 2012)

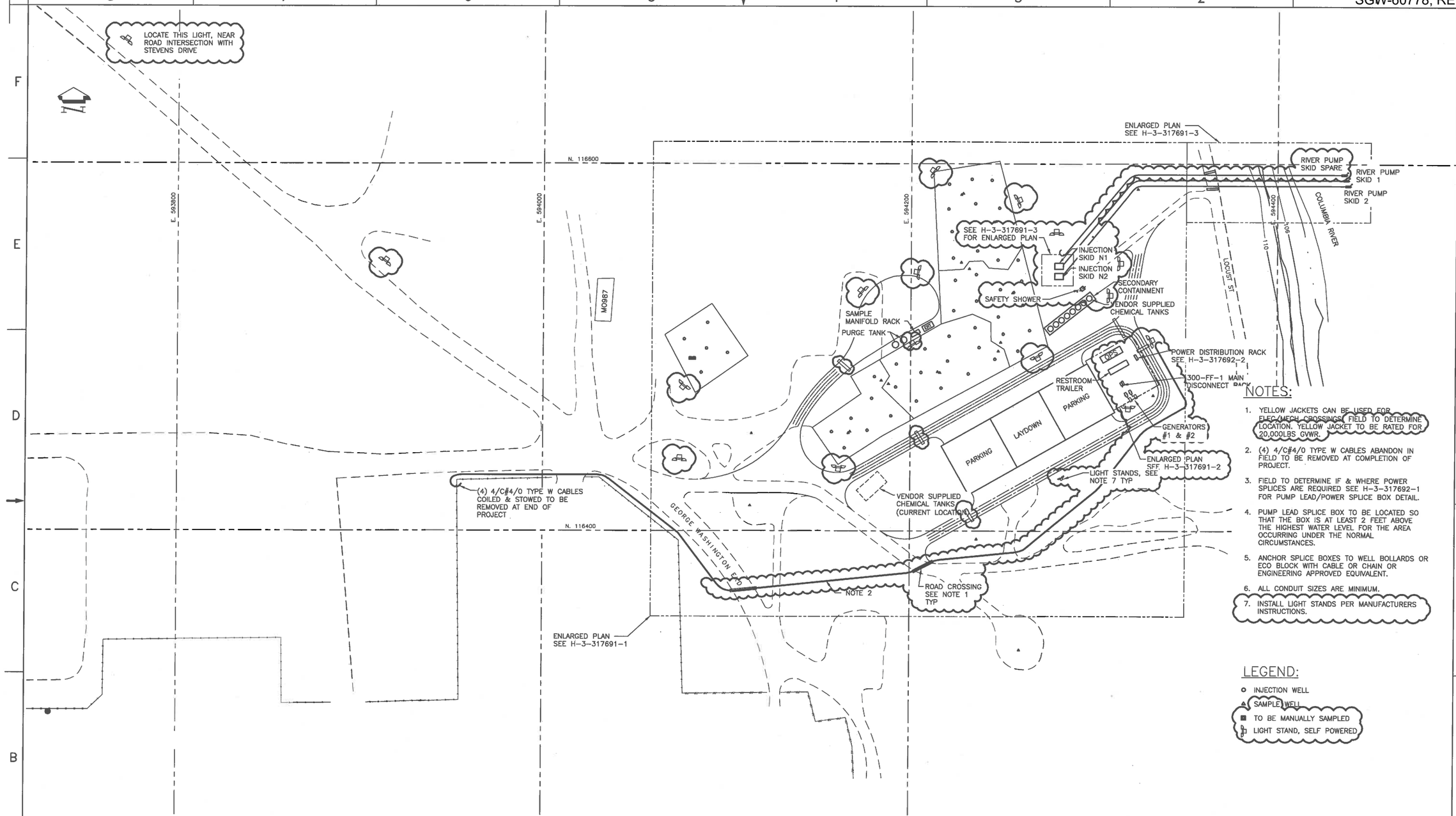

NOTES:

1. YELLOW JACKETS CAN BE USED FOR ELEC/MECH CROSSINGS. FIELD TO DETERMINE LOCATION. YELLOW JACKET TO BE RATED FOR 20,000LBS GVWR.
2. (4) 4/C#4/0 TYPE W CABLES ABANDON IN FIELD TO BE REMOVED AT COMPLETION OF PROJECT.
3. FIELD TO DETERMINE IF & WHERE POWER SPLICES ARE REQUIRED SEE H-3-317692-1 FOR PUMP LEAD/POWER SPLICE BOX DETAIL.
4. PUMP LEAD SPLICE BOX TO BE LOCATED SO THAT THE BOX IS AT LEAST 2 FEET ABOVE THE HIGHEST WATER LEVEL FOR THE AREA OCCURRING UNDER THE NORMAL CIRCUMSTANCES.
5. ANCHOR SPLICE BOXES TO WELL BOLLARDS OR ECO BLOCK WITH CABLE OR CHAIN OR ENGINEERING APPROVED EQUIVALENT.
6. ALL CONDUIT SIZES ARE MINIMUM.
7. INSTALL LIGHT STANDS PER MANUFACTURERS INSTRUCTIONS.

LEGEND:

- INJECTION WELL
- SAMPLE WELL
- TO BE MANUALLY SAMPLED
- LIGHT STAND, SELF POWERED

300 AREA CHEMICAL INJECTION SYSTEM
LOCATION B SITE PLAN

SITE PLAN
SCALE: 1:20

DWG NUMBER	TITLE
DRAWING TRACEABILITY LIST	

REF NUMBER	TITLE
H-3-317677-1	DRAWING LIST
REFERENCES	
NEXT USED ON	

REV NO.	REV INIT.	DESCRIPTION
1		INC ECR-16-001457, ECR-17-000875, ECR-18-000613, ECR-18-001444
REVISIONS		

BLDG. NO. 300G
INDEX NO. 8000

CAUTION
NOT COMPLETE WITHOUT CURRENT CHANGE DOCUMENTS FROM DATABASE

ATTENTION
DESTROY THIS DOCUMENT BY SHREDDING MAY CONTAIN SENSITIVE INFORMATION

NAME	DATE	COMPANY
DRAWN BY FR WAGNER		
CHECKED BY SC RENZ		CHPRC
TECHNICAL REVIEWER JG RIDDELLE		CHPRC
DESIGN AUTHORITY CJ AYRES		CHPRC

U.S. DEPARTMENT OF ENERGY
Richland Operations Office

CHEMICAL INJECTION SYSTEM
ELECTRICAL
SITE PLAN

SIZE F | DRAWING NUMBER H-3-317690 | SHEET 1 | REV 0
SCALE SHOWN
PLOTID
DOE_TB_F.DWG (JAN 2012)

ECR-18-001444 PAGE 25

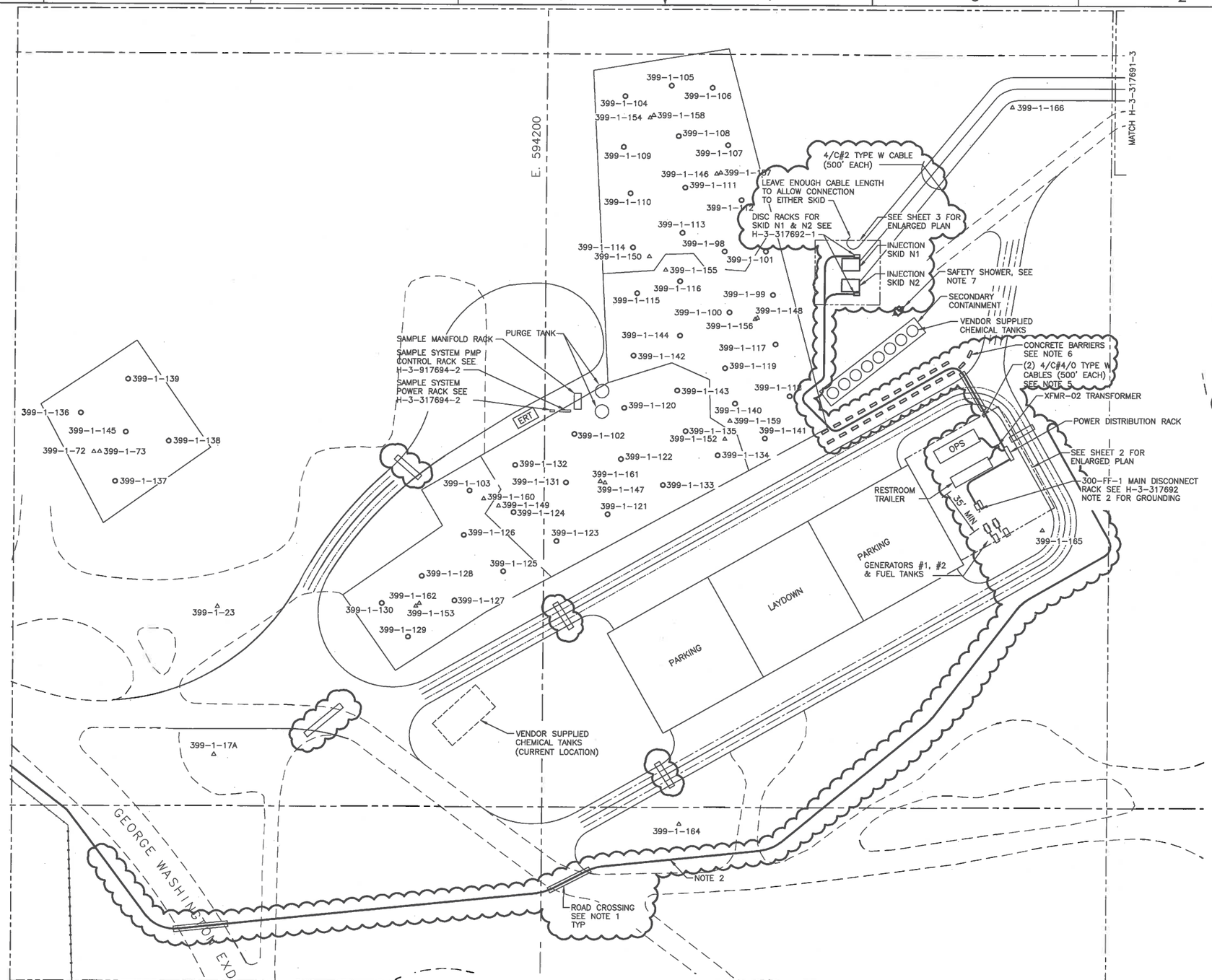

NOTES:

1. YELLOW JACKETS CAN BE USED FOR ELEC/MECH CROSSINGS. FIELD TO DETERMINE LOCATION. YELLOW JACKET TO BE RATED FOR 20,000LBS GVWR
2. (4) 4/C#4/0 TYPE W CABLES ABANDON TO BE REMOVED AT COMPLETION OF PROJECT.
3. SEE H-1-317690 FOR GENERAL NOTES
4. IF TRANSFORMER XFMR-02 & TRAILER DISCONNECT SWITCHES ARE 30 FEET OR LESS APART, CONNECT BOTH TO ONE COMMON GROUNDING ELECTRODE SYSTEMS, IF THEY ARE MORE THEN 30 FEET APART, ESTABLISH A GROUNDING ELECTRODE SYSTEM AT EACH LOCATION.
5. TYPE W CABLE TO BE SUPPORTED. WHEREVER SUBJECT TO PHYSICAL DAMAGE SUCH AS VEHICLE TRAFFIC. TYPE W CABLE WILL HAVE DELINEATORS. SUPPORTS MAY BE 3/8" PLYWOOD.
6. FIELD PLACE CONCRETE BARRIERS TO PROTECT CABLES FROM VEHICLE OR HUMAN TRAFFIC.
7. FIELD INSTALL WEATHERPROOF J-BOX ON END OF CABLES TO TRANSITION FROM #8AWG TO MIN #12AWG CONDUCTORS. INSTALL A PIGTAIL WITH CONNECTOR (FEMALE) ON END LIKE AND KIND TO MATCH PLUGS ON SAFETY SHOWER.

LEGEND:

- INJECTION WELL
- SAMPLE WELL
- TO BE SAMPLED MANUALLY

300 AREA CHEMICAL INJECTION SYSTEM LOCATION B ENLARGED SITE PLAN

H-3-317690-1

SITE PLAN

SCALE: 1:11

DWG NUMBER	TITLE
DRAWING TRACEABILITY LIST	

H-3-317677-1 DRAWING LIST

REF NUMBER	TITLE
NEXT USED ON	REFERENCES

REV NO.	REV DEL.	DESCRIPTION
1		INC ECR-16-001457, ECR-18-000613, ECR-18-001444

REVISIONS

BLDG. NO. 300G

INDEX NO. 8000

CAUTION
NOT COMPLETE WITHOUT CURRENT CHANGE DOCUMENTS FROM DATABASE

ATTENTION
DESTROY THIS DOCUMENT BY SHREDDING MAY CONTAIN SENSITIVE INFORMATION

	NAME	DATE	COMPANY
DRAWN BY	ER WAGNER		CHPRC
DESIGNED BY	JL RENZ		CHPRC
PROJECT MANAGER	JG RIDDELLE		CHPRC
DESIGN AUTHORITY	CJ AYRES		CHPRC

U.S. DEPARTMENT OF ENERGY
Richland Operations Office

CHEMICAL INJECTION SYSTEM ELECTRICAL ENLARGED SITE PLAN

SIZE	DRAWING NUMBER	SHEET	REV
F	H-3-317691	1	0

SCALE: SHOWN

PLOTID

DOE_TB_F.DWG (JAN 2012)

ECR-18-001444 PAGE 26

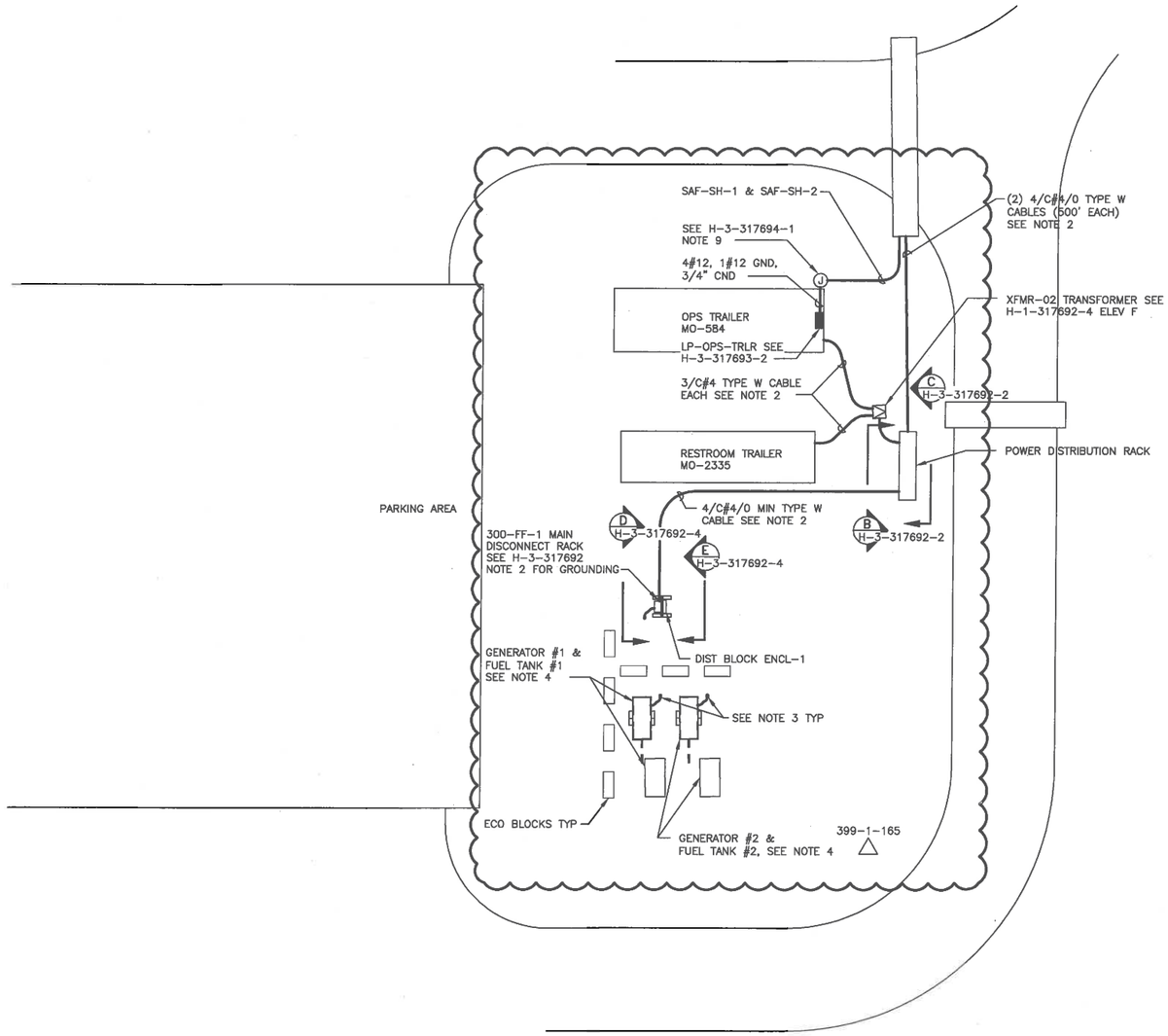

300 AREA CHEMICAL INJECTION SYSTEM
LOCATION B ENLARGED SITE PLAN
SHEET 1

SITE PLAN

SCALE: 3/32"=1'-0"

NOTES:

1. YELLOW JACKETS CAN BE USED FOR ELEC/MECH CROSSINGS.
2. TYPE W CABLES TO BE SUPPORTED WITH PLYWOOD LAID UNDERNEATH IT.
3. FIELD INSTALL PIGTAIL ON GENERATORS, USE 4/C#4/0 TYPE W CABLE WITH A 200 AMP, 4 POLE, MATING CONNECTOR, CABLE RANGE 4/0-250KCMIL SIMILAR ARKTITE CAT. #APR40428
4. DRIVE 2 5/8"X 8'-0" COPPER GROUND ROD VERTICALLY IN GROUND TO GRADE. THE MINIMUM DISTANCE BETWEEN GROUND RODS SHALL BE 10'-0" AND MAXIMUM SHALL BE 20'-0" AND BE BONDED TOGETHER.

LEGEND:

- ○ INJECTION WELL
- △ MONITORING WELL

ECR-18-001444 PAGE 27

DWG NUMBER	TITLE	REF NUMBER	TITLE
DRAWING TRACEABILITY LIST		REFERENCES	
		NEXT USED ON	

REV NO.	DESCRIPTION
0	INITIAL RELEASE INTO DMCS PER ECR-16-001457 INC ECR-17-000853, ECR-17-000875, ECR-18-000613, ECR-18-001444

REVISIONS

BLDG. NO. 300G

INDEX NO. 8000

CAUTION: NOT COMPLETE WITHOUT CURRENT CHANGE DOCUMENTS FROM DATABASE

ATTENTION: DESTROY THIS DOCUMENT BY SHREDDING MAY CONTAIN SENSITIVE INFORMATION

	NAME	DATE	COMPANY
DRAWN BY	SL RENZ	4/13/18	CHPRC
DRAWING CHECK			CHPRC
INDEPENDENT REVIEWER	JC RODELLE		CHPRC
DESIGN AUTHORITY	CJ AYRES		CHPRC

U.S. DEPARTMENT OF ENERGY
Richland Operations Office

CHEMICAL INJECTION SYS
ELECTRICAL
ENLARGED SITE PLAN

SIZE F | DRAWING NUMBER H-3-317691 | SHEET 2 | REV 0

SCALE SHOWN

PLOTID

DOE_TBLF.DWG (JAN 2012)

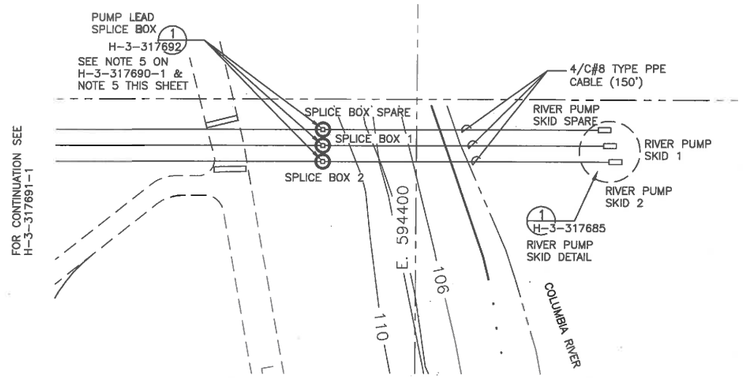

ENLARGED RIVER PUMP SITE PLAN

SCALE: 1:11

H-3-317690-1

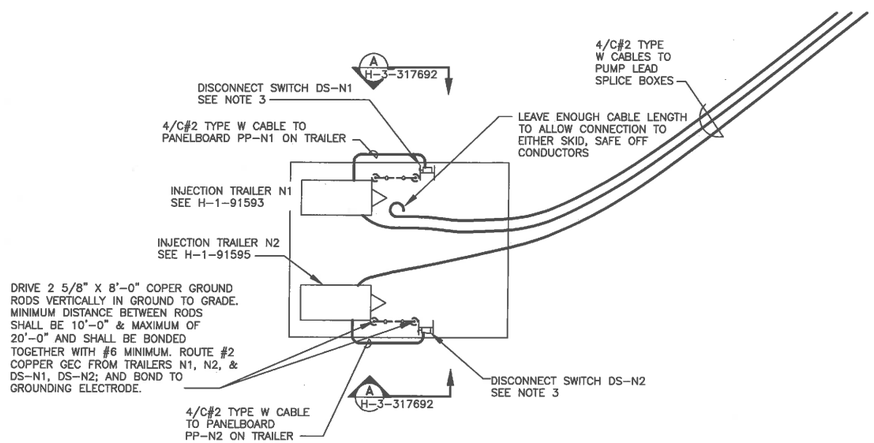

ENLARGED SKID PLAN

SCALE: 1:11

H-3-317691-1

NOTES:

1. BOND GROUNDING ELECTRODE CONDUCTOR TO EACH GROUND ROD. THE GROUNDING ELECTRODE CONDUCTOR SHALL BE CONTINUOUS OR IRREVERSIBLY SPLICED.
2. ROUTE GROUNDING ELECTRODE CONDUCTOR FROM GENERATOR NEUTRAL AND GROUND TERMINALS THROUGH GENERATOR FRAME GROUND LUG TO THE ASSOCIATED ELECTRODE SYSTEM.
3. INSTALL GROUNDING ELECTRODE CONDUCTOR FROM THE DISCONNECT GROUND TO THE ASSOCIATED ELECTRODE SYSTEM.
4. OVERHEAD POWER LINE MAY BE REMOVED AND REPLACED WITH TYPE W CABLE (BY OTHERS).
5. PUMP LEAD SPLICE BOX TO BE LOCATED SO THAT THE BOX IS AT LEAST 2 FEET ABOVE THE HIGHEST WATER LEVEL FOR THE AREA OCCURRING UNDER NORMAL CIRCUMSTANCES.
6. FOR CABLE PROTECTION, SEE H-3-317691-1 NOTE 5.

DWG NUMBER	TITLE
DRAWING TRACEABILITY LIST	

REF NUMBER	TITLE
H-3-317677-1	DRAWING LIST
REFERENCES	
NEXT USED ON	

REV. NO.	DESCRIPTION
0	INITIAL RELEASE INTO DMCS PER ECR-18-001444
REVISIONS	

BLDG. NO. 300G

INDEX NO. 8000

CAUTION
NOT COMPLETE WITHOUT CURRENT CHANGE DOCUMENTS FROM DATABASE

ATTENTION
DESTROY THIS DOCUMENT BY SHREDDING MAY CONTAIN SENSITIVE INFORMATION

	NAME	DATE	COMPANY
DRAWN BY	TR WAGNER	11/20/18	CH2MHILL
CHECKED	J BENZ		CH2MHILL
TECHNICAL REVIEWER			CH2MHILL
PROJECT ENGINEER	JG BODELLE		CH2MHILL
DESIGN AUTHORITY	CJ AYRES		CH2MHILL

U.S. DEPARTMENT OF ENERGY
Richland Operations Office

CHEMICAL INJECTION SYSTEM
ELECTRICAL
ENLARGED SITE PLANS

SIZE F | DRAWING NUMBER H-3-317691 | SHEET 3 | REV 0

SCALE SHOWN

PLOTID

DOE_TB_F.DWG (JAN 2012)

ECR-18-001444 PAGE 28

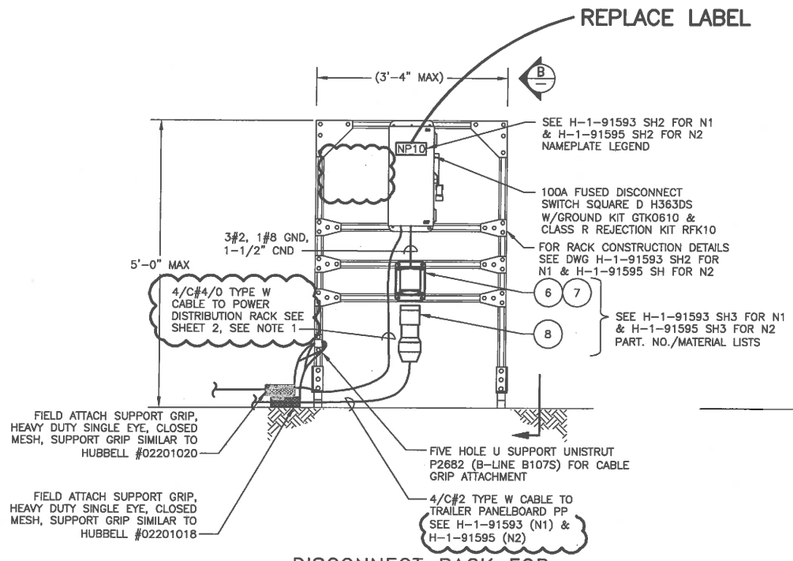

A DISCONNECT RACK FOR N1 AND N2 TRAILERS DETAIL
H-3-317691 SCALE: 1"=1'-0"

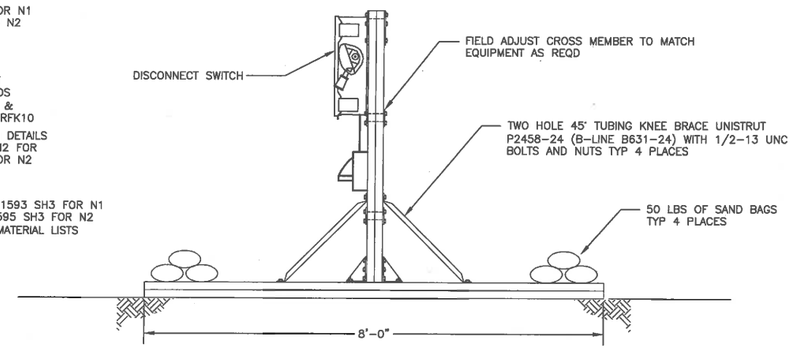

B SECTION
SCALE: NONE

NOTES:

1. DISCONNECT CANNOT ACCEPT #4/0 CONDUCTORS AND WILL REQUIRE A FIELD LOCATED SPLICE BOX SEE DETAIL 1, TO BE WITHIN 50' OF DISCONNECT AND TRANSITION TO #2 MIN CONDUCTORS.

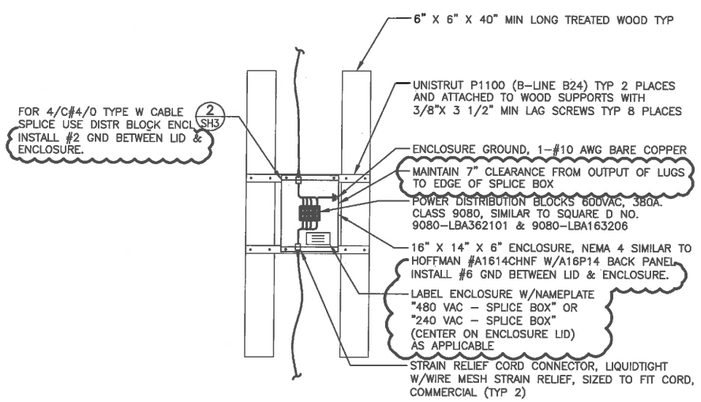

1 PUMP LEAD, POWER OR PUMP POWER SPLICE BOX DETAIL
H-3-317690 & H-3-317694 SCALE: NONE USE AS REQUIRED

DWG NUMBER	TITLE
DRAWING TRACEABILITY LIST	

REF NUMBER	TITLE
H-3-317677-1	CHEMICAL INJECTION SYSTEM DWG LIST
REFERENCES	
NEXT USED ON	

REV NO.	DESCRIPTION
1	INC ECR-16-001457, ECR-18-001444
0	INITIAL RELEASE INTO DMCS PER ECR-15-000692
REVISIONS	

BLDG. NO. 300G

INDEX NO. 8000

CAUTION
NOT COMPLETE WITHOUT CURRENT CHANGE DOCUMENTS FROM DATABASE

ATTENTION
DESTROY THIS DOCUMENT BY SHREDDING MAY CONTAIN SENSITIVE INFORMATION

	NAME	DATE
DRAWN BY	BW BROWN	11/2/15
CHECKED	SL DENZ	CHKRC
DISCIPLINE DESIGN	CJ AYRES	CHKRC
DISCIPLINE DESIGN	CJ AYRES	CHKRC
PROJECT DESIGN	JC RIDDELLE	CHKRC
DESIGN AUTHORITY	CJ AYRES	CHKRC

U.S. DEPARTMENT OF ENERGY
Richland Operations Office

CHEMICAL INJECTION SYSTEM ELECTRICAL DETAILS

SIZE F | DRAWING NUMBER H-3-317692 | SHEET 1 | REV 0
SCALE SHOWN
PLOTTED

ECR-18-001444 PAGE 29

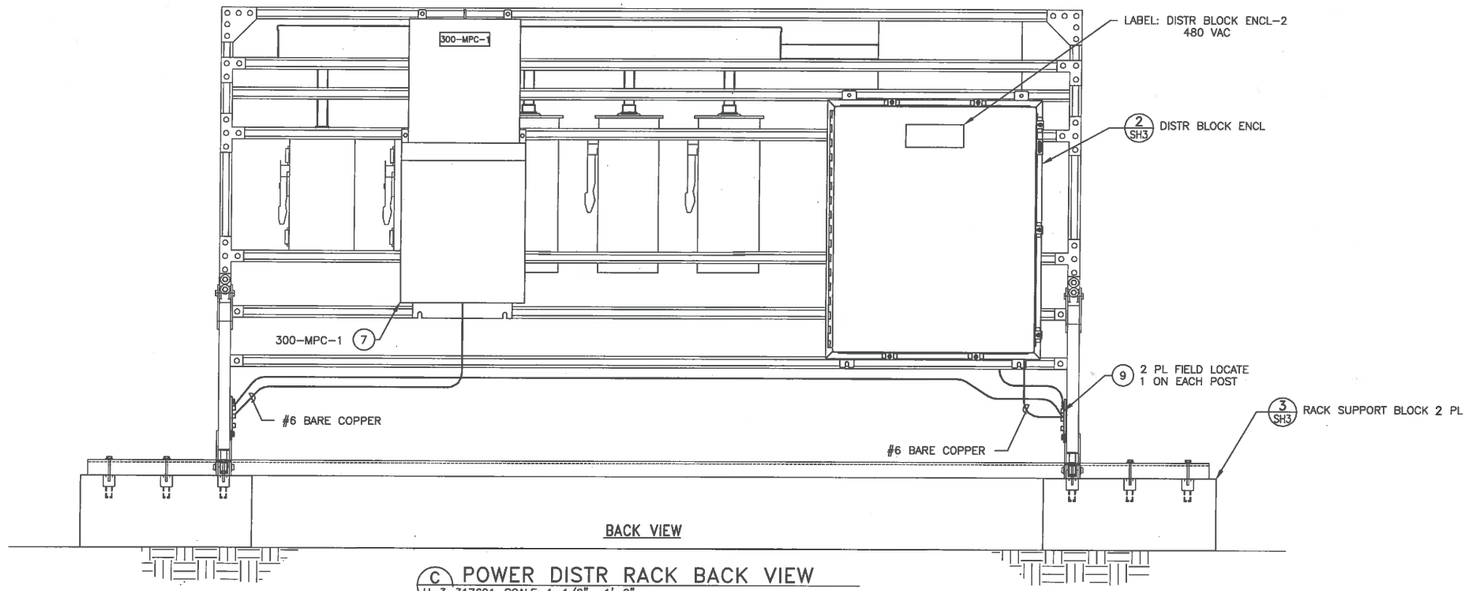

C POWER DISTR RACK BACK VIEW
H-3-317691 SH1 SCALE: 1-1/2"= 1'-0"

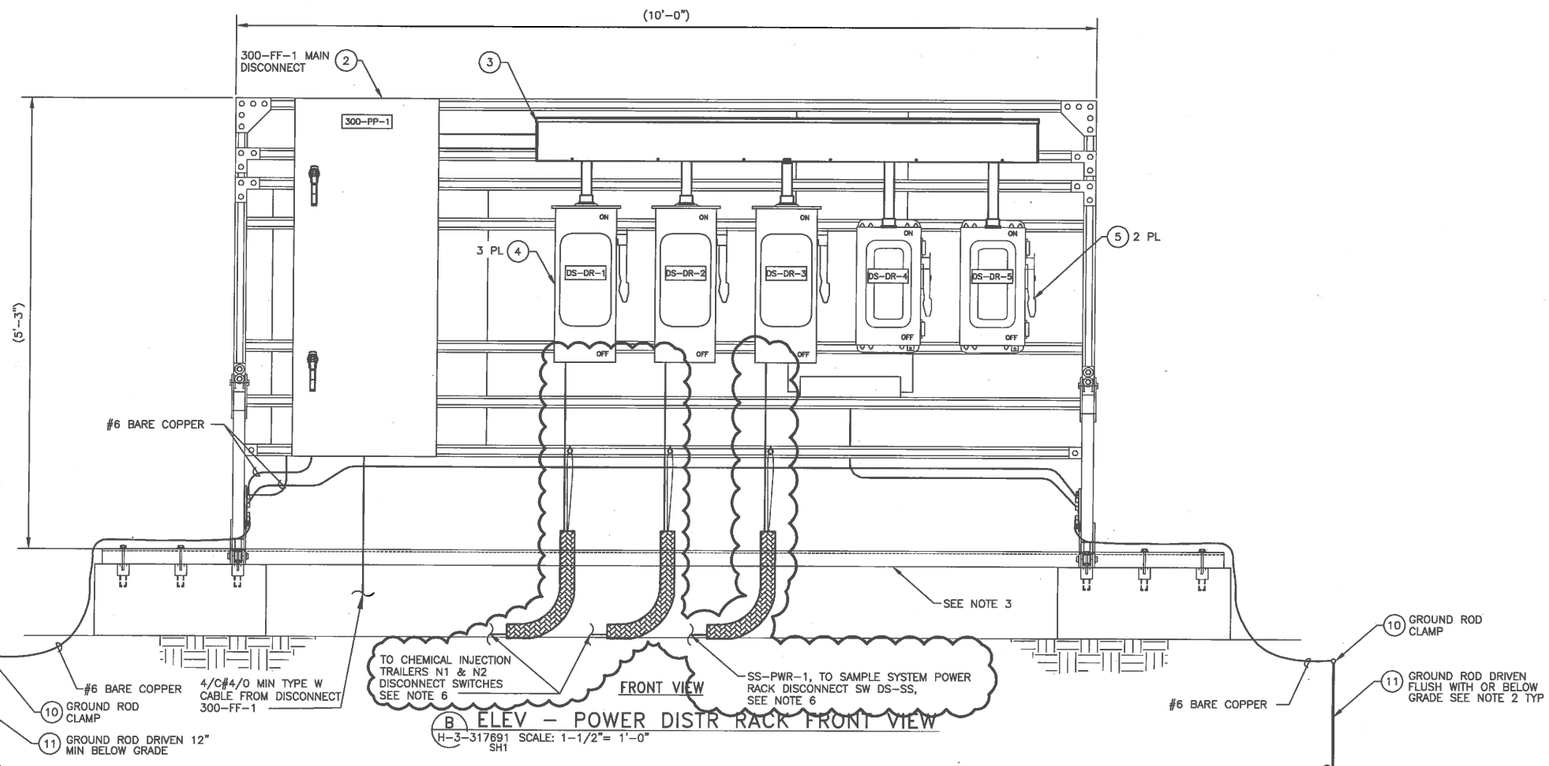

B ELEV - POWER DISTR RACK FRONT VIEW
H-3-317691 SH1 SCALE: 1-1/2"= 1'-0"

NOTES:

1. FOR THE PARTS LIST/MATERIAL LIST SEE SHEET 3.
2. LOCATING OF GROUNDING ELECTRODES AND CONDUCTORS TO BE PERFORMED AT TIME OF RACK PLACEMENT. GROUNDING ELECTRODES MAY BE PLACED HORIZONTALLY IN A 30" DEEP TRENCH WITH ENGINEERING APPROVAL GROUNDING ELECTRODES MUST BE A MINIMUM OF 6' APART IN TRENCH.
3. THE AREA BELOW RACK EQUIPMENT TO BE KEPT CLEAR, REMOVE LIFTING CHANNEL AFTER FIELD INSTALLATION.
4. RACKS ARE EXISTING AND MODIFIED FOR ADDITIONS OR RELOCATION OF EQUIPMENT. RACK MATERIALS ARE SIMILAR TO DETAIL 1 ON H-1-91142 SHEET 4.
5. CONDUIT AND CABLE ARE SHOWN DIAGRAMMATICALLY, FIELD ROUTE, SEE ONE LINE DIAGRAM H-3-317693-1 FOR CONDUCTORS AND CONDUITS NOT IDENTIFIED.
6. DISCONNECT CANNOT ACCEPT #4/0 CONDUCTORS AND WILL REQUIRE A FIELD LOCATED SPLICE BOX (SEE H-3-317692-1 DETAIL 1) TO BE WITHIN 50' OF DISCONNECT AND TRANSITION TO #2 MIN CONDUCTORS.

DWG NUMBER	TITLE
DRAWING TRACEABILITY LIST	

REF NUMBER	TITLE
H-3-317677-1	DRWING LIST
REFERENCES	
NEXT USED ON	

REV NO.	DESCRIPTION
0	INITIAL RELEASE INTO DMCS PER ECR-18-001457; INC ECR-18-000613, ECR-18-001444
REVISIONS	

PROJ. NO. 3000
INDEX NO. 5000

CAUTION
NOT COMPLETE WITHOUT CURRENT CHANGE DOCUMENTS FROM DATABASE

ATTENTION
DESTROY THIS DOCUMENT BY SHREDDING MAY CONTAIN SENSITIVE INFORMATION

	NAME	DATE
DRAWN BY	ER WAGNER	10/19/18
SUPV	SC RENZ	
SUPVR DESIGN	CJ AYRES	
SUPVR DESIGN		
SUPVR DESIGN	VG RIDDELLE	
DESIGN AUTHORITY	CJ AYRES	

U.S. DEPARTMENT OF ENERGY
Richland Operations Office

CHEMICAL INJECTION SYSTEM
ELECTRICAL
DETAILS

SIZE F | DRAWING NUMBER H-3-317692 | SHEET 2 | REV 0
SCALE SHOWN
PLOTID

ECR-18-001444 PAGE 30

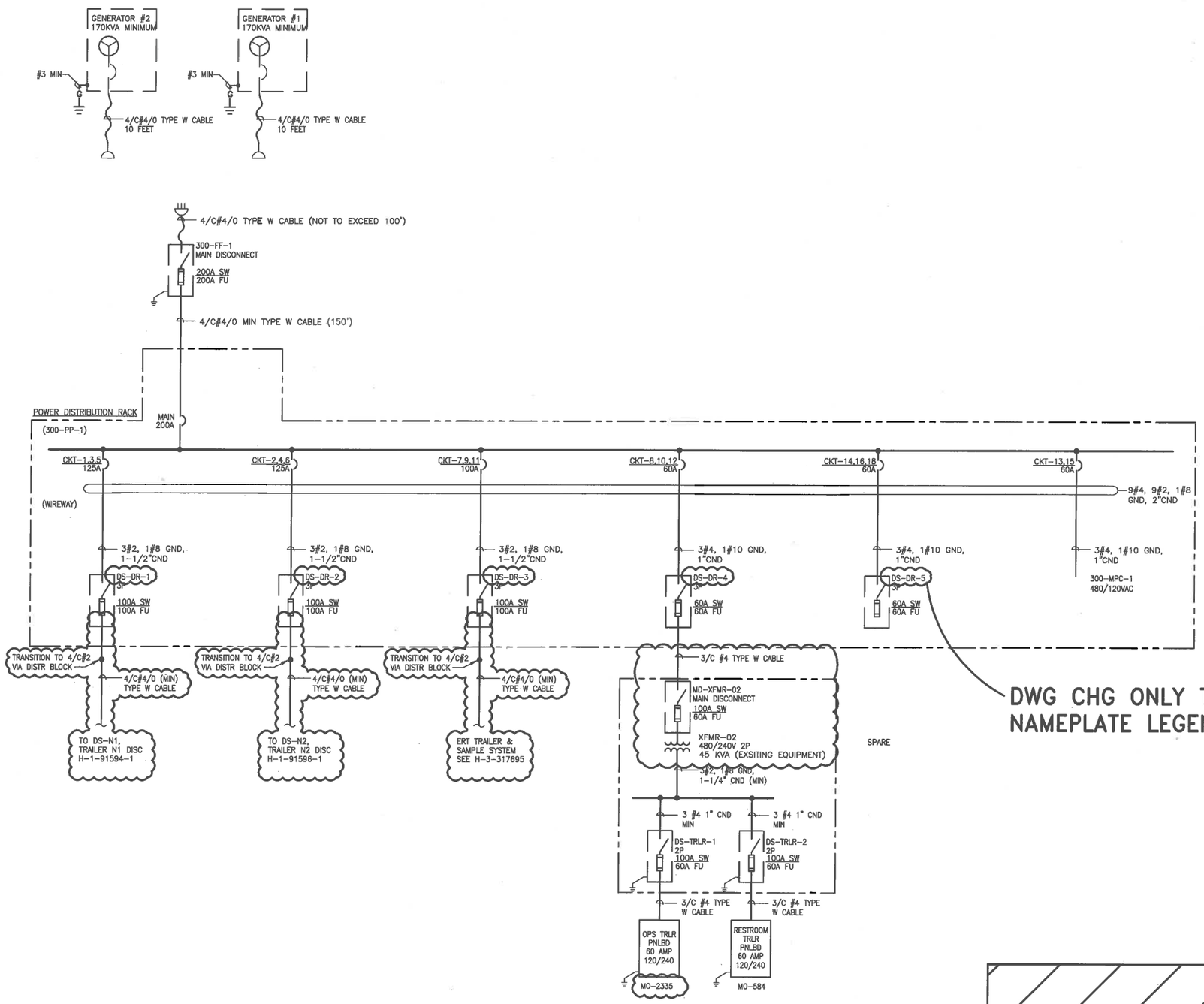

DWG NUMBER	TITLE
DRAWING TRACEABILITY LIST	

REF NUMBER	TITLE
H-2-836121	DRAWING LIST
REFERENCES	
NEXT USED ON	

REV NO.	DESCRIPTION
2	INC ECR-17-000875, ECR-18-000913, ECR-18-001444
1	INC ECR-17-000853
REVISIONS	

BLDG. NO. 300 AREA

INDEX NO. 7201

CAUTION
NOT COMPLETE WITHOUT CURRENT CHANGE DOCUMENTS FROM DATABASE

ATTENTION
DESTROY THIS DOCUMENT BY SHREDDING MAY CONTAIN SENSITIVE INFORMATION

	NAME	DATE	COMPANY
DRAWN BY	SJ RENZ	4/18/18	CH2PIC
CHECKED	CJ AYRES		CH2PIC
DESIGN REVIEWED	JG RIDDELLE		CH2PIC
DESIGN AUTHORITY	CJ AYRES		CH2PIC

U.S. DEPARTMENT OF ENERGY
Richland Operations Office

CHEMICAL INJECTION SYSTEM ELECTRICAL ONELINE DIAGRAM

SIZE F | DRAWING NUMBER H-3-317693 | SHEET 1 | REV 1

SCALE NONE

PLOTID

DOE_TB_F.DWG (JAN 2012)

ECR-18-001444 PAGE 31

PANEL NO. 300-PP-1

VOLTAGE: ☐ 120/208V,3 PHASE ☒ 480V,3 PHASE
GROUND: ☐ LUG ☒ BUS
MOUNTING: ☐ FLUSH ☒ SURFACE
MAINS: ☐ LUGS ONLY ☒ MAIN BREAKER 200 AMP ☐ TOP ☒ BOTTOM
NEUTRAL: ☐ 50 % ☒ 100 %
COVER: ☒ WITH DOOR ☐ WITHOUT DOOR ☒ WITH LOCK ☐ WITHOUT LOCK
U/L LISTED BKR INTERRUPTING RATING 18,000 RMS SYM AMPS MIN
SERVICE ENTRANCE RATED, LISTED FOR CONTINUOUS DUTY

LOCATION	LOAD (KVA)	NO.	NO.	LOAD (KVA)	LOCATION
DS-DR-1 (DS-N1 TRLR N1 DISC)	18.5	1	2	18.5	DS-DR-2 (DS-N2 TRLR N2 DISC)
	18.5	3	4	18.5	
	18.5	5	6	18.5	
DS-DR-3 (ERT TRLR RCPT & SAMPLE SYS DISC DS-SS)	15.03	7	8	28.9	DS-DR-4 (XFMR-02 & OPS & BATHROOM TRLRS)
	15.03	9	10	28.9	
	15.03	11	12	28.9	
300-MPC-1	5.0	13	14	___	DS-DR-5 (SPARE)
	5.0	15	16	___	
SPACE	---	17	18	___	
SPACE	---	19	20	---	SPACE
SPACE	---	21	22	---	SPACE
SPACE	---	23	24	---	SPACE
		25	26	---	SPACE
		27	28	---	SPACE
		29	30	---	SPACE

125A A∅ B∅ C∅ 125A; 100A; 60A; 60A

PHASE A TOTAL = 85.93 KVA PHASE B TOTAL = 85.93 KVA PHASE C TOTAL = 85.43 KVA TOTAL LOAD = 257.29 KVA

*PROVIDE GFCI CIRCUIT BREAKER
LOCATION: POWER DISTRIBUTION RACK LAST UPDATED: REV 0 H-3-317693-2

PANEL NO. LP-OPS-TRLR

VOLTAGE: ☒ 120/240V,1 PHASE ☐ 480V,3 PHASE
GROUND: ☐ LUG ☒ BUS
MOUNTING: ☒ FLUSH ☐ SURFACE
MAINS: ☐ LUGS ONLY ☒ MAIN BREAKER 200 AMP ☒ TOP ☐ BOTTOM
NEUTRAL: ☐ 50 % ☒ 100 %
COVER: ☒ WITH DOOR ☐ WITHOUT DOOR ☒ WITH LOCK ☐ WITHOUT LOCK
U/L LISTED BKR INTERRUPTING RATING 10,000 RMS SYM AMPS MIN

LOCATION	LOAD (KVA)	NO.	NO.	LOAD (KVA)	LOCATION
SPARE	---	1	2	1.50	LIGHTS
	---	3	4	1.84	RCPTS
SIGN OUTLET	.18	5	6	1.40	RCPTS
HVAC	5.76	7	8		
	5.76	9	10		
SAFETY SHOWER RCPT	3.00	11	12		
SAFETY SHOWER RCPT	1.70	13	14		
SPARE	---	15	16		
		17	18		
		19	20		

100A A∅ B∅ 20A; 20A; 20A; 50A; 20A; 15A; 20A

Phase A Total 10.54 kVA Phase B Total 10.60 kVA Total Load = 21.14 kVA

LOCATION: OPERATION TRAILER MO-2335 LAST UPDATED: _____ H-3-317693-2 REV 0

DWG NUMBER	TITLE
DRAWING TRACEABILITY LIST	

REF NUMBER	TITLE
H-2-836121	DRAWING LIST
REFERENCES	
NEXT USED ON	

REV NO.	DESCRIPTION
0	INITIAL RELEASE INTO DMCS PER ECR-18-001444
REVISIONS	

BLDG. NO. 300
INDEX NO. 7201

CAUTION
NOT COMPLETE WITHOUT CURRENT CHANGE DOCUMENTS FROM DATABASE

ATTENTION
DESTROY THIS DOCUMENT BY SHREDDING MAY CONTAIN SENSITIVE INFORMATION

NAME	DATE	
DRAWN BY SL RENZ	4/18/18	DRAWING
DRAWING CHECK		CHKRG
		CHKRG
DESIGN CONTROL CHANGE JG BODELTE		CHKRG
DESIGN AUTHORITY CJ AYRES		CHKRG

U.S. DEPARTMENT OF ENERGY
Richland Operations Office

CHEMICAL INJECTION SYSTEM
ELECTRICAL
PANEL SCHEDULES

SIZE F DRAWING NUMBER H-3-317693 SHEET 2 REV 0
SCALE NONE
PLOTID
DOE_TR_F.DWG (JAN 2013)

ECR-18-001444 PAGE 32

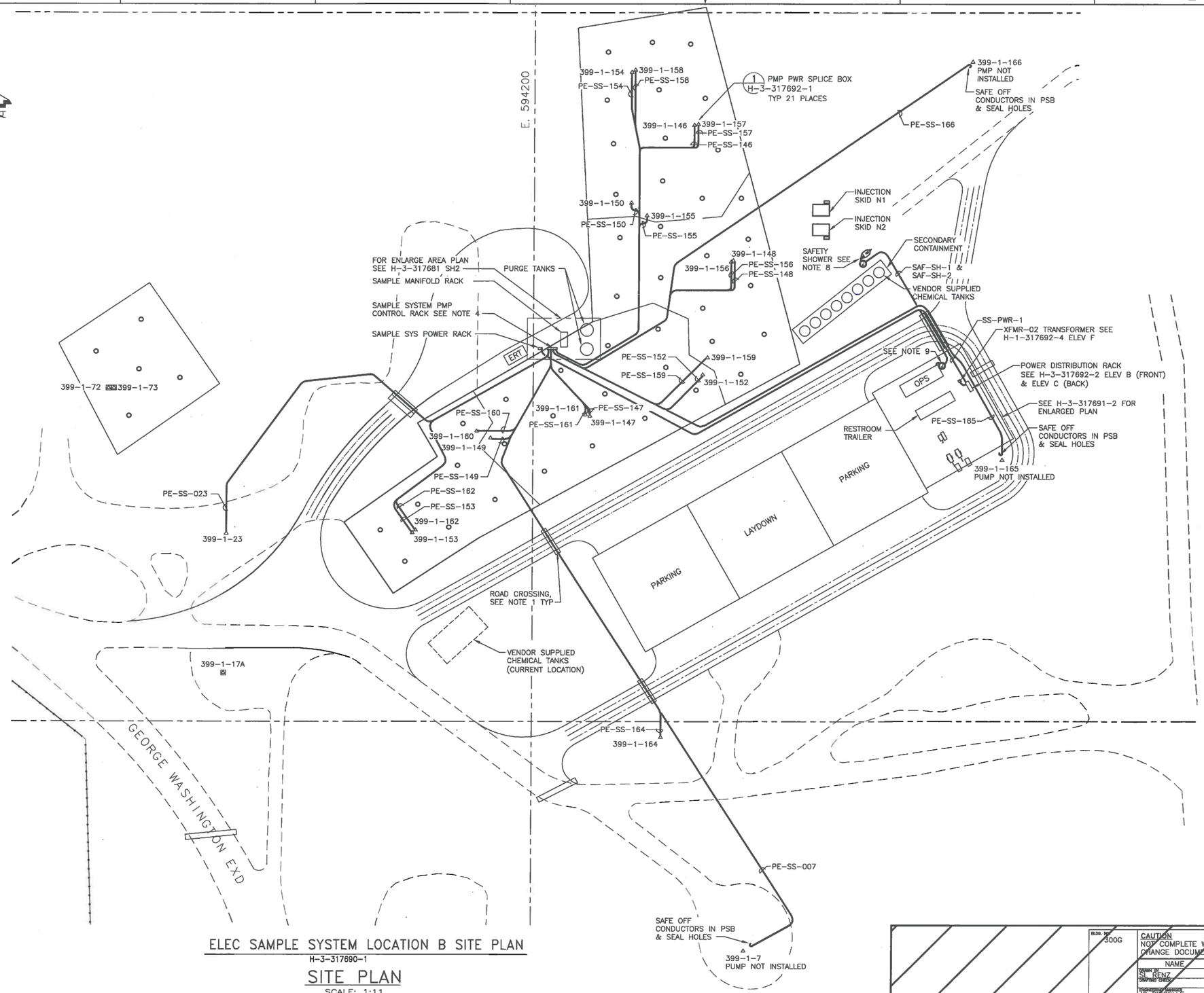

ELEC SAMPLE SYSTEM LOCATION B SITE PLAN

H-3-317690-1

SITE PLAN

SCALE: 1:11

NOTES:

1. YELLOW JACKETS CAN BE USED FOR ELEC/MECH CROSSINGS, FIELD TO DETERMINE LOCATION. YELLOW JACKET TO BE RATED FOR 20,000LBS GVWR.
2. ALL CABLES SHOWN ARE 4/C#8 TYPE W CABLES UNLESS OTHERWISE NOTED, SEE CABLE SCHEDULE ON SHEET 3.
3. CABLE ROUTINGS ARE DIAGRAMMATICALLY SHOWN AND REPRESENT CABLE LENGTHS SHOWN ON CABLE SCHEDULE ON SHEET 3, FIELD MAY CHOOSE TO ROUTE DIFFERENTLY.
4. PLACE AFD SIDE OF RACK NORTH.
5. EVERY SAMPLE WELL WILL HAVE A PUMP POWER SPLICE SEE DETAIL 1 H-1-317692 SH 1 TO TRANSITION FROM TYPE W CABLE TO 4/C#12 TRAY CABLE SIMILAR TO OLFLEX PART NO. 221204 FOR DOWN HOLE PUMP CABLE.
6. CABLES TO BE PROTECTED FROM PHYSICAL HARM. BARRIERS NATURAL OR CONSTRUCTED WILL BE USED IN AREAS WHERE CONDUCTORS OR EQUIPMENT MAY BE IN DANGER FROM PEOPLE OR VEHICLES.
7. BARRIERS WILL BE PLACED OR DESIGNATED TO ALERT PERSONNEL OF CABLE PRESENCE.
8. FIELD INSTALL WEATHERPROOF J-BOX ON END OF CABLES TO TRANSITION FROM #8AWG TO MIN. #12AWG CONDUCTORS. INSTALL A PIGTAIL WITH CONNECTOR (FEMALE) ON END LIKE AND KIND TO MATCH PLUGS ON SAFETY SHOWER.
9. FIELD INSTALL WEATHERPROOF J-BOX ON/NEAR OPS TRAILER TO TRANSITION FROM #8AWG TO MIN #12AWG CONDUCTORS FOR SAFETY SHOWER. ROUTE CONDUCTORS IN CONDUIT BETWEEN PANELBOARD IN TRAILER AND J-BOX.

DWG NUMBER	TITLE
DRAWING TRACEABILITY LIST	

H-3-317677-1 DRAWING LIST	
REF NUMBER	TITLE
REFERENCES	
NEXT USED ON	

REV REL.	REV NO.	DESCRIPTION
	B	INITIAL RELEASE INTO DMCS PER ECR-18-001444
REVISIONS		

BLDG. NO. 300G

WORK NO. 8000

CAUTION
NOT COMPLETE WITHOUT CURRENT CHANGE DOCUMENTS FROM DATABASE

ATTENTION
DESTROY THIS DOCUMENT BY SHREDDING MAY CONTAIN SENSITIVE INFORMATION

	NAME	DATE	COMPANY
DRAWN BY	SL RENZ	4/18/18	CHPRC
DRAFTING CHECK			CHPRC
TECHNICAL CHECK	JG RIDDELLE		CHPRC
			CHPRC
DESIGN AUTHORITY	CJ AYRES		CHPRC

U.S. DEPARTMENT OF ENERGY
Richland Operations Office

SAMPLE SYSTEM ELECTRICAL SITE PLAN

SIZE F | DRAWING NUMBER H-3-317694 | SHEET 1 | REV 0

SCALE SHOWN

PLOTID

DOE_7B_F.DWG (JAN 2012)

ECR-18-001444 PAGE 33

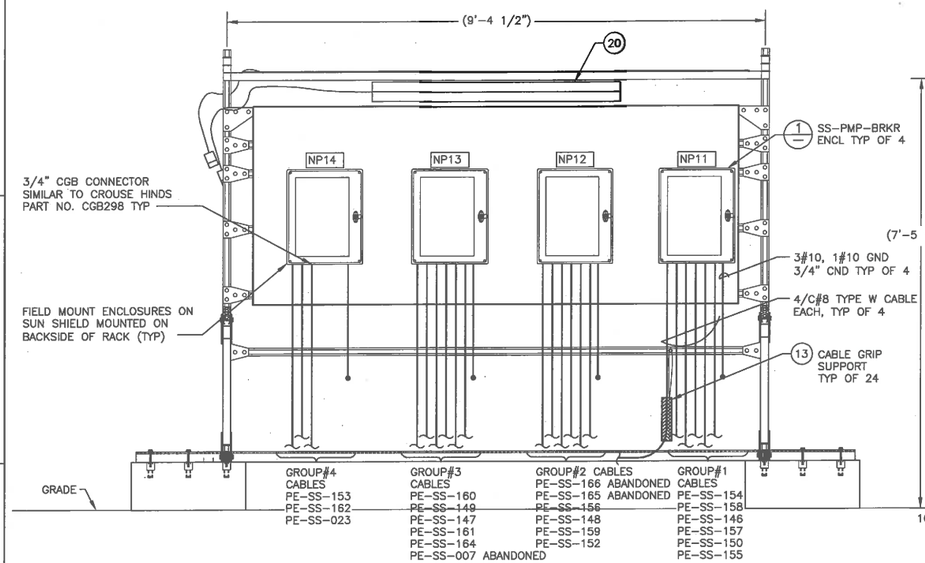

B SOUTH SIDE ELEVATION
H-3-317681 SCALE: 1"=1'-0"
SHEET 2

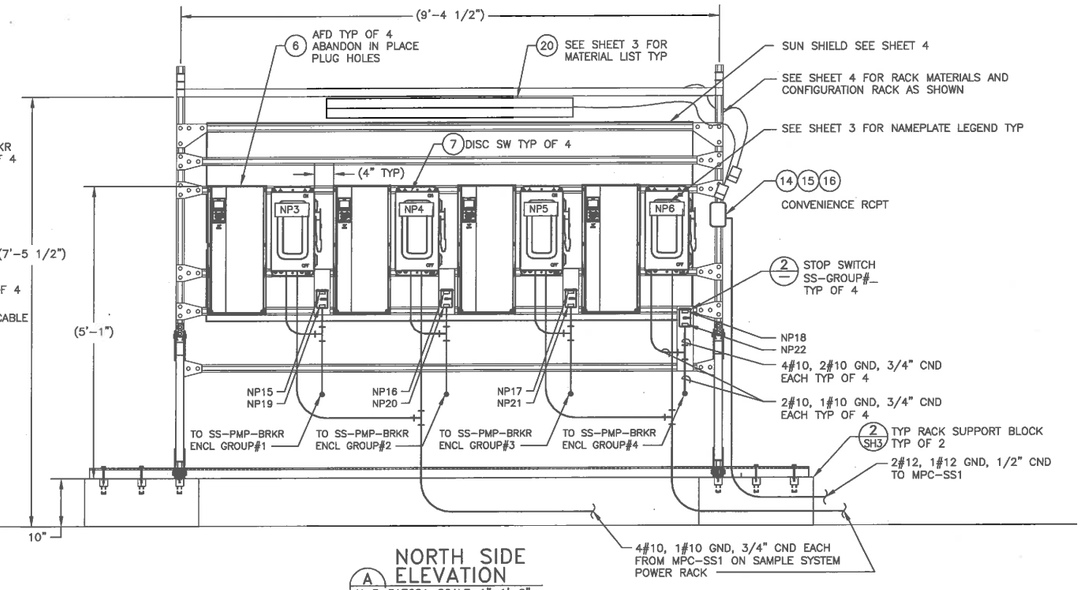

A NORTH SIDE ELEVATION
H-3-317681 SCALE: 1"=1'-0"
SHEET 2

SAMPLE SYSTEM PMP CONTROL RACK

SCALE: 1"=1'0"

SEE SHEET 3 FOR MATERIAL LIST AND NAMEPLATE LEGEND

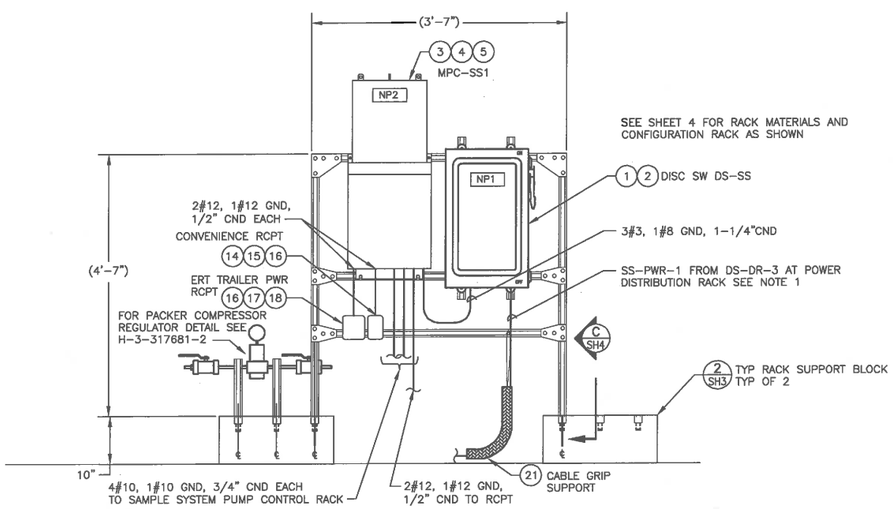

C SAMPLE SYSTEM POWER RACK
H-3-317681 SCALE: 1"=1'-0"
SHEET 2

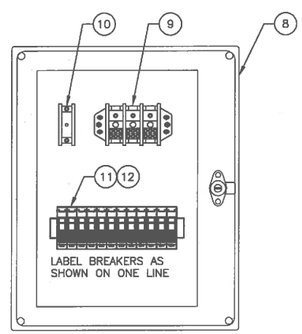

1 SS-PMP-BRKR-ENCL
SCALE: 3"=1'-0"

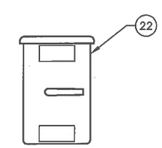

2 STOP SWITCH SS-GROUP#_ TYP
SCALE: 6"=1'-0"

NOTES:

1. DISCONNECT CANNOT ACCEPT #4/0 CONDUCTORS AND WILL REQUIRE A FIELD LOCATED SPLICE BOX (SEE H-3-317692-1 DETAIL 1) TO BE WITHIN 50' OF DISCONNECT AND TRANSITION TO #2 MIN CONDUCTORS.

DWG NUMBER	TITLE	REF NUMBER	TITLE
DRAWING TRACEABILITY LIST		REFERENCES	
		NEXT USED ON	

REV NO.	REV NO.	DESCRIPTION
0		INITIAL RELEASE INTO DMCS PER ECR-18-001444
REVISIONS		

BLDG. NO. 300G

INDEX NO. 8000

CAUTION
NOT COMPLETE WITHOUT CURRENT CHANGE DOCUMENTS FROM DATABASE

ATTENTION
DESTROY THIS DOCUMENT BY SHREDDING MAY CONTAIN SENSITIVE INFORMATION

	NAME	DATE	COMPANY
DRAWN BY	SL RENZ	4/15/18	CHPRC
DRAFTING CHECK			CHPRC
TECHNICAL CHECK	JG RODELLE		CHPRC
DESIGN AUTHORITY	CJ AYRES		CHPRC

U.S. DEPARTMENT OF ENERGY
Richland Operations Office

SAMPLE SYSTEM ELECTRICAL DETAILS

SIZE	DRAWING NUMBER	SHEET	REV
F	H-3-317694	2	0

SCALE SHOWN

PLOTID

DOE_TB_F.DWG (JAN 2012)

ECR-18-001444 PAGE 34

MATERIAL LIST

QTY	REF DES	PART/ CATALOG NO.	DESCRIPTION	MANUFACTURER	ITEM NO.
1	DS-SS	H364AWK-GL-CLR	HEAVY DUTY DISCONNECT SAFETY SWITCH, FUSED, 200 AMP, 600 VAC, 4 WIRE SINGLE THROW, NEMA 3R, WITH FACTORY INSTALLED GROUND LUG & CLASS R FUSE REJECTION KIT	SQUARE D	1
3		TRS100R	FUSE, CLASS R, TIME DELAY, 600V		2
1	MPC-SS1	MPZ25S40F WITH Q0120 & Q0220	MINI-POWER CENTER 5 KVA, 1 PHASE, WITH TYPE QO BREAKERS 1 POLE & 2 POLE SEE PANELBOARD SCHEDULE FOR QUANTITY AND ITEMS #4 & #5.	SQUARE D CLASS 7440	3
AR		Q0120 & Q0220	CIRCUIT BREAKERS, TYPE QO, 1 POLE & 2 POLE FOR USE WITH ITEMS #3 & #5	SQUARE D CLASS 7440	4
AR		Q01PAF & Q02PAF	CIRCUIT BREAKER, LOCKING FIXED ATTACHMENT 1 POLE & 2 POLE FOR USE WITH ITEMS #3 & #4	SQUARE D CLASS 7440	5
4	AFD-GROUP#1 AFD-GROUP#2 AFD-GROUP#3 AFD-GROUP#4	SEE DESCRIPTION	ADJUST FREQUENCY DRIVE, 7.5 HP, 240 VOLT, 1 PHASE, PROFIBUS, LCD KEYPAD, IP66 ENCLOSURE, UL LABELED, UL508A OR UL508C CAT. NO. FC-202P5K5S2E66H2XGXXSXSXXXXA0BXCXXXXDX	DANFOSS	6
4	DS-SS-GROUP#1 DS-SS-GROUP#2 DS-SS-GROUP#3 DS-SS-GROUP#4	H361AWK-GL-CLR	HEAVY DUTY DISCONNECT SAFETY SWITCH, FUSED, 30 AMP, 600 VAC, 4 WIRE SINGLE THROW, NEMA 3R, WITH FACTORY INSTALLED GROUND LUG & CLASS R FUSE REJECTION KIT	SQUARE D	7
4	SS-PMP-BRKR-ENCL GROUP#1 SS-PMP-BRKR-ENCL GROUP#2 SS-PMP-BRKR-ENCL GROUP#3 SS-PMP-BRKR-ENCL GROUP#4	CSD20168W	ENCLOSURE 20X16X8, NEMA 4, HINGED DOOR WITH A WINDOW AND BACK PANEL	HOFFMAN	8
1		9080LBA362106 & 9080LB23	STANDARD POWER DISTRIBUTION BLOCK, 600V, 3 POLE, (1) MAIN #14-2/0 AWG & (6) BRANCH #14-4 AWG WITH PLASTIC COVER	SQUARE D	9
1		9080LBA162101 & 9080LB21	STANDARD POWER DISTRIBUTION BLOCK, 600V, 1 POLE, (1) MAIN #14-2/0 AWG & (6) BRANCH #14-4 AWG WITH PLASTIC COVER	SQUARE D	10
6	BRKR-**	1489-M2C020	THERMAL MAGNETIC CIRCUIT BREAKER, 2 POLE, TRIP CURVE C, 2 AMP, 240VAC, UL LISTED	ALLEN BRADLEY	11
AR			DIN RAIL, 35MM X 304.8MM	COMMERICAL	12
24	PE-SS-** CABLES	2206010	SUPPORT GRIP, HEAVY DUTY, SINGLE EYE, CLOSED MESH, FOR CABLE OD .75" - .99"	HUBBELL	13
2		FD-1-50	DEVICE BOX, SINGLE GANG, CASE FD DEEP BODY, 1/2" HUB	OZ-GEDNEY	14
2		CKMUV	IN-USE WEATHER COVER USED WITH ITEM #14	RED DOT	15
4		GF20LGD	RECEPTACLE, DUPLEX, NEMA CONFIGURATION 5-20R, GFCI, GRAY	HUBBELL	16
1			DEVICE BOX, TWO GANG, CASE FD DEEP BODY 1/2" HUB		17
1			IN-USE WEATHER COVER USED WITH ITEM #17		18
			NOT USED		19
2		376T81L4120PR	LUMINARY, 4', SINGLE T8 LAMP, 120V, WET/DAMP LOCATION RATED WITH HEAVY DUTY LENS	LDPI	20
2	SS-PWR-1	02206013	SUPPORT GRIP, HEAVY DUTY, SINGLE EYE, CLOSED MESH, FOR CABLE OD 1.5" - 1.99"		21
4	SS-GROUP#_	7862R	MANUAL CONTROL SWITCH, 2 POLE, 60 AMP, 600V, NEMA 3R ENCL	PASS & SEYMOUR	22

CABLE SCHEDULE

CABLE#	TYPE W AWG *	LENGTH FT	FROM	TO
SS-PWR-1	4/C#4/0	500	DS-DR-3	DS-SS
PE-SS-154	4/C#8	340	SS-PMP-BRKR GROUP#1	PSB-SS-154
PE-SS-158	4/C#8	340	SS-PMP-BRKR GROUP#1	PSB-SS-158
PE-SS-146	4/C#8	345	SS-PMP-BRKR GROUP#1	PSB-SS-146
PE-SS-157	4/C#8	345	SS-PMP-BRKR GROUP#1	PSB-SS-157
PE-SS-150	4/C#8	220	SS-PMP-BRKR GROUP#1	PSB-SS-150
PE-SS-155	4/C#8	205	SS-PMP-BRKR GROUP#1	PSB-SS-155
PE-SS-166	4/C#8	510	SS-PMP-BRKR GROUP#2	PSB-SS-166
PE-SS-165	4/C#8	560	SS-PMP-BRKR GROUP#2	PSB-SS-165
PE-SS-156	4/C#8	240	SS-PMP-BRKR GROUP#2	PSB-SS-156
PE-SS-148	4/C#8	240	SS-PMP-BRKR GROUP#2	PSB-SS-148
PE-SS-159	4/C#8	175	SS-PMP-BRKR GROUP#2	PSB-SS-159
PE-SS-152	4/C#8	170	SS-PMP-BRKR GROUP#2	PSB-SS-152
PE-SS-160	4/C#8	120	SS-PMP-BRKR GROUP#3	PSB-SS-160
PE-SS-149	4/C#8	110	SS-PMP-BRKR GROUP#3	PSB-SS-149
PE-SS-147	4/C#8	80	SS-PMP-BRKR GROUP#3	PSB-SS-147
PE-SS-161	4/C#8	80	SS-PMP-BRKR GROUP#3	PSB-SS-161
PE-SS-164	4/C#8	420	SS-PMP-BRKR GROUP#3	PSB-SS-164
PE-SS-007	4/C#8	680	SS-PMP-BRKR GROUP#3	PSB-SS-007
PE-SS-153	4/C#8	270	SS-PMP-BRKR GROUP#4	PSB-SS-153
PE-SS-162	4/C#8	270	SS-PMP-BRKR GROUP#4	PSB-SS-162
PE-SS-023	4/C#8	430	SS-PMP-BRKR GROUP#4	PSB-SS-023
SAF-SH-1	4/C#8	500	OPS TRLR PNLBD VIA J-BOX	SAFETY SHOWER J-BOX
SAF-SH-1	4/C#8	500	OPS TRLR PNLBD VIA J-BOX	SAFETY SHOWER J-BOX

MINIMUM CONDUCTOR SIZE SHOWN

NAMEPLATE LEGEND

NP#	NAMEPLATE	TEXT SIZE
NP1	SAMPLE SYSTEM DS-SS FED FROM DS-DR-3	3/16"
NP2	MPC-SS1 FED FROM DS-SS	3/16"
NP3	DS-SS-GROUP#1	3/16"
NP4	DS-SS-GROUP#2	3/16"
NP5	DS-SS-GROUP#3	3/16"
NP6	DS-SS-GROUP#4	3/16"
NP7	NOT USED	
NP8	NOT USED	
NP9	NOT USED	
NP10	NOT USED	
NP11	SS-PMP-BRKR ENCL GROUP#1	3/16"
NP12	SS-PMP-BRKR ENCL GROUP#2	3/16"
NP13	SS-PMP-BRKR ENCL GROUP#3	3/16"
NP14	SS-PMP-BRKR ENCL GROUP#4	3/16"
NP15	SS-GROUP #1	3/16"
NP16	SS-GROUP #2	3/16"
NP17	SS-GROUP #3	3/16"
NP18	SS-GROUP #4	3/16"
NP19	GROUP #1 399-1-154 399-1-158 399-1-146 399-1-157 399-1-150 399-1-155	1/4"
NP20	GROUP #2 399-1-166 399-1-165 399-1-156 399-1-148 399-1-159 399-1-152	1/4"
NP21	GROUP #3 399-1-160 399-1-149 399-1-147 399-1-161 399-1-164 399-1-007	1/4"
NP22	GROUP #4 399-1-073 399-1-072 399-1-153 399-1-162 399-1-023 399-1-17A	1/4"

ECR-18-001444 PAGE 35

DWG NUMBER	TITLE	REF NUMBER	TITLE
DRAWING TRACEABILITY LIST		REFERENCES	
		NEXT USED ON	

REV NO. | REV DATE | DESCRIPTION
0 | INITIAL RELEASE INTO DMCS PER ECR-18-001444
REVISIONS

BLDG. NO. 7804D

CAUTION
NOT COMPLETE WITHOUT CURRENT CHANGE DOCUMENTS FROM DATABASE

ATTENTION
DESTROY THIS DOCUMENT BY SHREDDING MAY CONTAIN SENSITIVE INFORMATION

NAME | DATE | COMPANY
DRAWN BY: SL BENZ 4/19/18 CHPRC
DRAFTING CHECK: CHPRC
ENGINEERING APPROVED: JG RODELLE CHPRC
CHPRC
INDEX NO. 8001 7301
DESIGN AUTHORITY: CJ AYRES CHPRC

U.S. DEPARTMENT OF ENERGY
Richland Operations Office

SAMPLE SYSTEM
ELECTRICAL MATRL LIST
CABLE SCH & NP LEGEND

SIZE F | DRAWING NUMBER H-3-317694 | SHEET 3 | REV 0
SCALE NONE

PLOTID

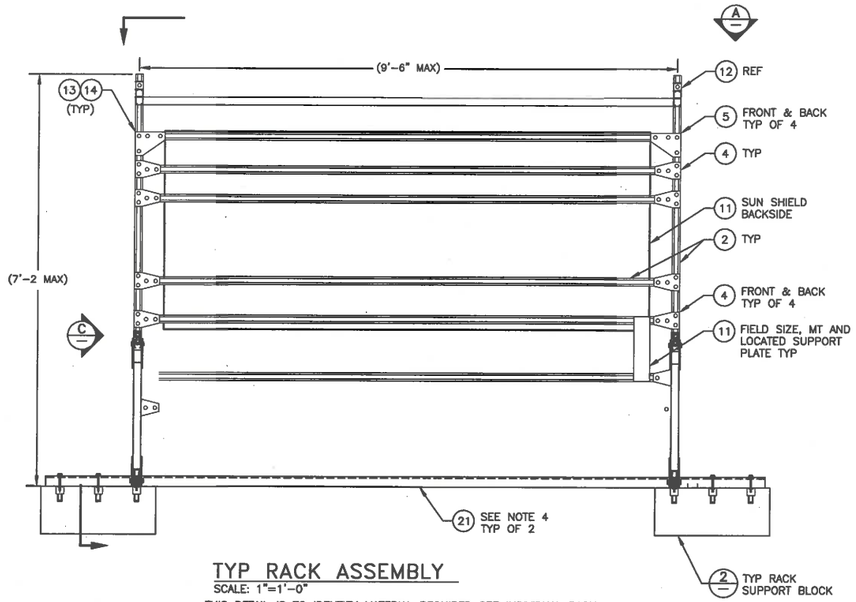

TYP RACK ASSEMBLY

SCALE: 1"=1'-0"

THIS DETAIL IS TO IDENTIFY MATERIAL REQUIRED SEE INDIVIDUAL RACK DETAILS FOR SPECIFIC CONFIGURATION.

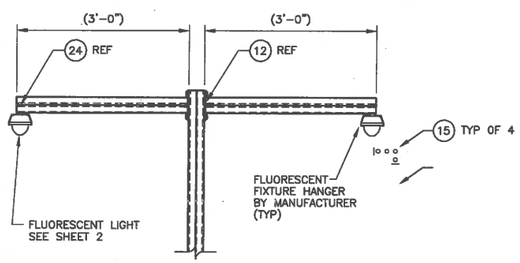

B ELEVATION

SCALE: NONE

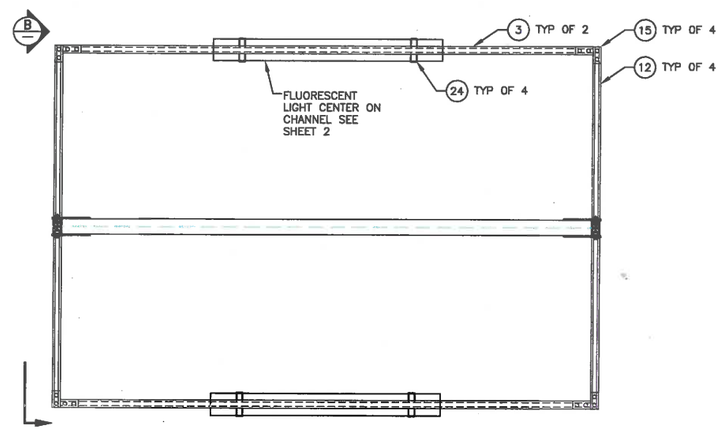

A ELEVATION

SCALE: NONE

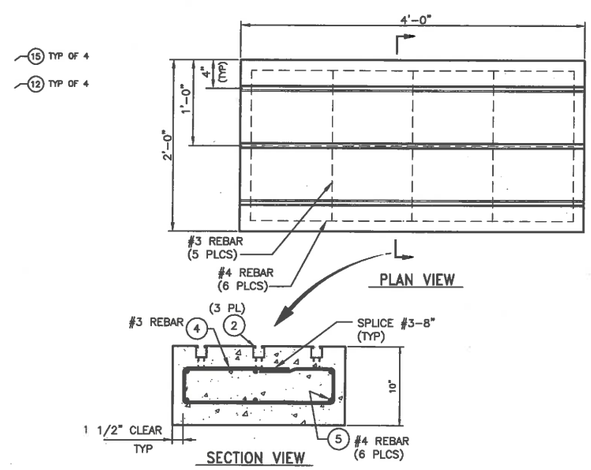

2 TYPICAL RACK SUPPORT BLOCK DETAIL

SCALE: NONE

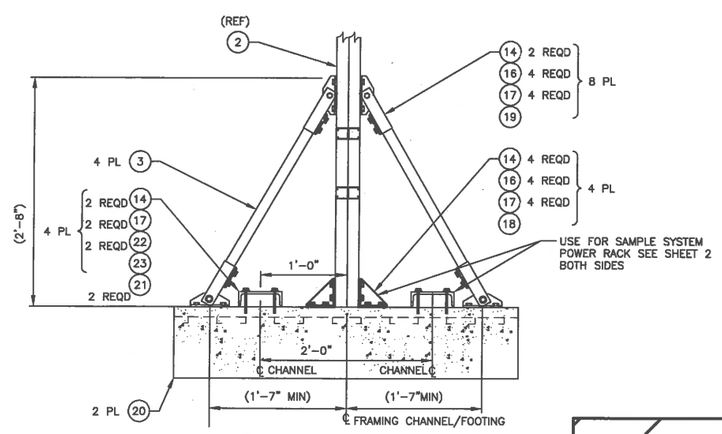

C ELEVATION

SCALE: NONE

PARTS LIST/MATERIAL LIST (CONTINUED)

QTY -010	REF DES	PARTS / DASH NUMBER	NOMENCLATURE/DESCRIPTION	MATERIAL/REFERENCE	SHEET	ITEM NO
AR		N225	SPRING NUT, 1/2-13	(B-LINE)	–	14
4		B143	FOUR HOLE CORNER PLATE	(B-LINE)	–	15
AR			BOLT, HEX HD, CAP SCREW 1/2" X 1 1/2" HHCS	(B-LINE)	–	16
AR		1/2" FW	WASHER, FLAT, 1/2"	CS, GALV	–	17
4		B844W	BASE, POST (UNIVERSAL BRACKET, WELDED)	(B-LINE)	–	18
8		B634	ADJUSTABLE BRACE, SINGLE CHANNEL	(B-LINE)	–	19
2			NOT USED		–	20
2			CHANNEL, C6X13 X 10'-2 1/2" X10"	ASTM A36 CS	–	21
8			BOLT, HEX HEAD, 1/2-13UNC X 3.5 GALVANIZED	ASTM A307	–	22
1		262	THREAD LOCK AND SEAL, RED LIQUID	LOCTITE	–	23
4		6686SS	MOUNTING BRACKET	LDPI	–	24

PARTS LIST/MATERIAL LIST

QTY -010	REF DES	PARTS / DASH NUMBER	NOMENCLATURE/DESCRIPTION	MATERIAL/REFERENCE	SHEET	ITEM NO
X			ASSEMBLY		–	1
LAR		B22A	CHANNEL, BACK TO BACK	(B-LINE)	–	2
LAR		B22	CHANNEL, SINGLE	(B-LINE)	–	3
32		B136	FOUR HOLE TEE GUSSET PLATE	(B-LINE)	–	4
4		B137	FOUR HOLE CORNER GUSSET PLATE	(B-LINE)	–	5
3		B22-I-48	INSERT, CONCRETE 4 FT, WITH STYROFOAM FILLER AND END CAPS	PRE-GALVANIZED (B-LINE)	–	6
LAR		–	REINFORCEDMENT BAR #3	ASTM A 615 GRADE 60	–	7
LAR		–	REINFORCEMENT BAR, #4	ASTM A615 GRADE 60	–	8
AR		N228	NUT, 3/8-16	(B-LINE)	–	9
AR		HHC 3/8x1 1/4 ZN	SCREW, HEX HEAD CAP, 3/8-16 x 1 1/4, GALVANIZED	(B-LINE)	–	10
AR			ALUMINUM OR STAINLESS STEEL, 16 GAGE	ASTM B209 ASTM A240 TYPE 304L	–	11
4		B297-36	DOUBLE CHANNEL BRACKET 36"	(B-LINE)	–	12
AR		HHC 1/2x1 1/4 ZN	SCREW, HEX HEAD CAP, 1/2-13 x 1 1/4, GALVANIZED	(B-LINE)	–	13

CONTINUED ABOVE ZONE F4

GENERAL NOTES:

1. FOR APPLICABLE DESIGN CODES AND STANDARDS.
   A. ASCE-7-05 AMERICAN NATIONAL STANDARD FOR MINIMUM DESIGN LOADS FOR BUILDINGS AND OTHER STRUCTURES.
   B. INTERNATIONAL BUILDING CODE, IBC 2006.
   C. NFPA 70 NATIONAL ELECTRICAL CODE.
   D. AMERICAN CONCRETE INSTITUTE (ACI) 318-95.
   E. PRC-PRO-ENG-097 – "ENGINEERING DESIGN AND EVALUATION (NATURAL PHENOMENA HAZARD), REV 4, 2006, PROJECT HANFORD MANAGEMENT SYSTEM, RICHLAND, WASHINGTON.
   F. SEE CALCULATION 0846401.04-S-001.
2. CONSTRUCTION:

   THE SUBCONTRACTOR SHALL VERIFY ALL DIMENSIONS AND CONDITIONS PRIOR TO START OF WORK AND NOTIFY THE COMPANY OF ANY DISCREPANCIES OR INCONSISTENCIES.

   CONCRETE:

   MATERIALS AND CONSTRUCTION SHALL CONFORM TO ACI SPECIFICATIONS AND AS SHOWN ON THE DRAWINGS. MATERIALS: CONCRETE MIX: F'c=4,000 psi AT 28 DAYS REINFORCING STEEL Fy=ASTM A615, DEFORMED, GRADE 60.

   STEEL:

   FABRICATION AND ERECTION: THE FABRICATION AND ERECTION OF ALL STEEL WORK SHALL BE IAW THE DRAWINGS AND AISC.

NOTES:

1. ATTACH 16 GAGE ALUMINUM OR STAINLESS SHEET METAL SUN SHIELD TO HORIZONTAL CHANNEL WITH 3/8" HEX HEAD CAP SCREWS AND SPRING NUTS.
2. 16 GAGE ALUMINUM OR STAINLESS SHEET METAL SUN SHIELD WITH 3/4" EDGES. FIELD ATTACH TO RACK LEG WITH #10 SELF TAPPING SCREWS.
3. FULL SHADES SHALL BE INSTALLED ACROSS THE TOP OF THE RACK. ALL SHADE PANELS SHALL BE SUPPORTED BY THEIR OWN FRAMING
4. STRUCTURAL CHANNEL MEMBERS USED DURING TRANSPORTATION AND LIFTING AND ARE TO BE REMOVED AFTER FINAL ON SITE PLACEMENT OF RACK.

DWG NUMBER	TITLE	REF NUMBER	TITLE
DRAWING TRACEABILITY LIST		REFERENCES	
		NEXT USED ON	

REV NO.	DESCRIPTION
0	INITIAL RELEASE INTO DMCS PER ECR-18-001444

REVISIONS

BLDG. NO. 300G

INDEX NO. 7301 7108

CAUTION: NOT COMPLETE WITHOUT CURRENT CHANGE DOCUMENTS FROM DATABASE

ATTENTION: DESTROY THIS DOCUMENT BY SHREDDING MAY CONTAIN SENSITIVE INFORMATION

	NAME	DATE
DRAWN BY	SL BENZ	4/24/18
DRAWING CHECK		CHKRQ
ENGINEERING CHECK	JG RODELTE	CHKRQ
		CHKRQ
DESIGN AUTHORITY	CJ AYRES	CHKRQ

U.S. DEPARTMENT OF ENERGY
Richland Operations Office

SAMPLE SYSTEM RACK MATERIAL ASSEMBLY

SIZE F | DRAWING NUMBER H-3-317694 | SHEET 4 | REV 0

SCALE AS SHOWN

PLOTTED

ECR-18-001444 PAGE 36

NOTES:
1. LAST THREE DIGITS MATCH THE LAST THREE DIGITS OF THE ASSOCIATED WELL.

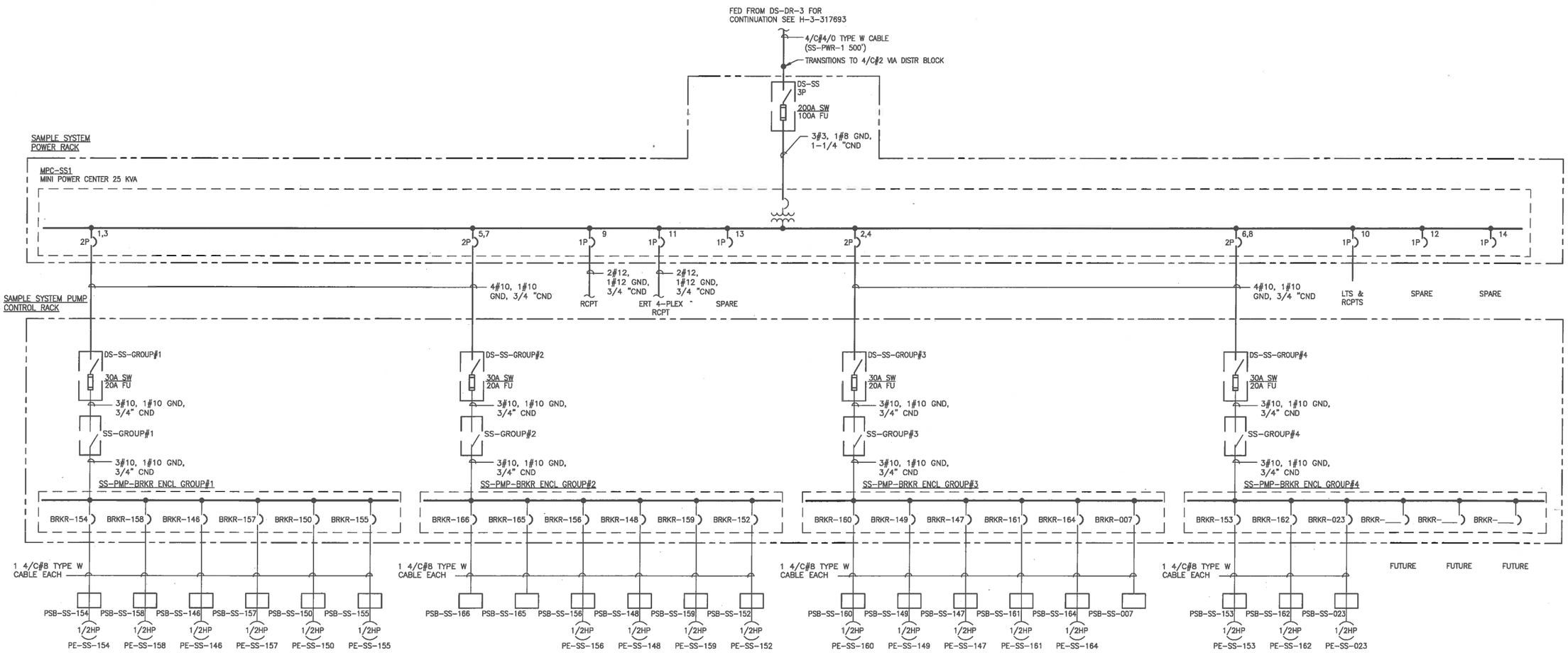

PANEL NO. MPC-SS1

VOLTAGE: ☒ 120/240V,1 PHASE ☐ 480V, 3 PHASE

GROUND: ☐ LUG ☒ BUS

MOUNTING: ☒ FLUSH ☐ SURFACE

MAINS: ☐ LUGS ONLY ☒ MAIN BREAKER 100 AMP ☒ TOP ☐ BOTTOM

NEUTRAL: ☐ 50 % ☒ 100 %

COVER: ☒ WITH DOOR ☐ WITHOUT DOOR ☒ WITH LOCK ☐ WITHOUT LOCK

U/L LISTED BKR INTERRUPTING RATING 10,000 RMS SYM AMPS MIN

100A A C PRIMARY BREAKER 18,000 AIC
25 KVA, 1 PHASE
480-240/120VAC

LOCATION	LOAD (kVA)	NO.	A#	B#	NO.	LOAD (kVA)	LOCATION
DS-SS-GROUP#1	2.88	1	20A	125A	2	---	MAIN
	2.88	3	20A	20A	4	---	
DS-SS-GROUP#2	2.88	5	20A	20A	6	2.88	DS-SS-GROUP#3
	2.88	7	20A	20A	8	2.88	
(2)CONVENIENCE RCPTS	.36	9	20A	20A	10	2.88	DS-SS-GROUP#4
4-PLEX RCPT FOR ERT TRLR	.36	11	20A	20A	12	2.88	
SPARE	---	13		20A	14	.50	LIGHT / RCPTS
SPACE	---	15		20A	16	---	SPACE
SPACE	---	17			18	---	SPARE
SPACE	---	19			20	---	SPACE
SPACE	---	21			22	---	SPACE
SPACE	---	23			24	---	SPACE
SPACE	---	25			26	---	SPACE
	---	27			28	---	SPACE

Phase A Total 12.38 kVA | Phase B Total 11.88 kVA | Total Load = 24.26 kVA

LOCATION: SAMPLE SYSTEM POWER RACK LAST UPDATED: REV 0 H-3-317695-1

DWG NUMBER	TITLE
DRAWING TRACEABILITY LIST	

REF NUMBER	TITLE
H-2-836121	DRAWING LIST
NEXT USED ON	REFERENCES

REV NO.	DESCRIPTION
0	INITIAL RELEASE INTO DMCS PER ECR-18-001444

REVISIONS

BLDG. NO. 300

INDEX NO. 7201

CAUTION: NOT COMPLETE WITHOUT CURRENT CHANGE DOCUMENTS FROM DATABASE

ATTENTION: DESTROY THIS DOCUMENT BY SHREDDING MAY CONTAIN SENSITIVE INFORMATION

	NAME	DATE	COMPANY
DRAWN BY	SL RENZ	4/18/18	CHPNC
DRAWING CHECKED			CHPNC
DESIGN ENGINEER	LG RIDDELLE		CHPNC
DESIGN AUTHORITY	CJ AYRES		CHPNC

U.S. DEPARTMENT OF ENERGY
Richland Operations Office

SAMPLE SYSTEM ELECTRICAL
ONE LINE DIAG & PANEL SCH

SIZE F | DRAWING NUMBER H-3-317695 | SHEET 1 | REV 0

SCALE NONE

PLOTID

DOE_TB_F.DWG (JAN 2013)

ECR-18-001444 PAGE 37

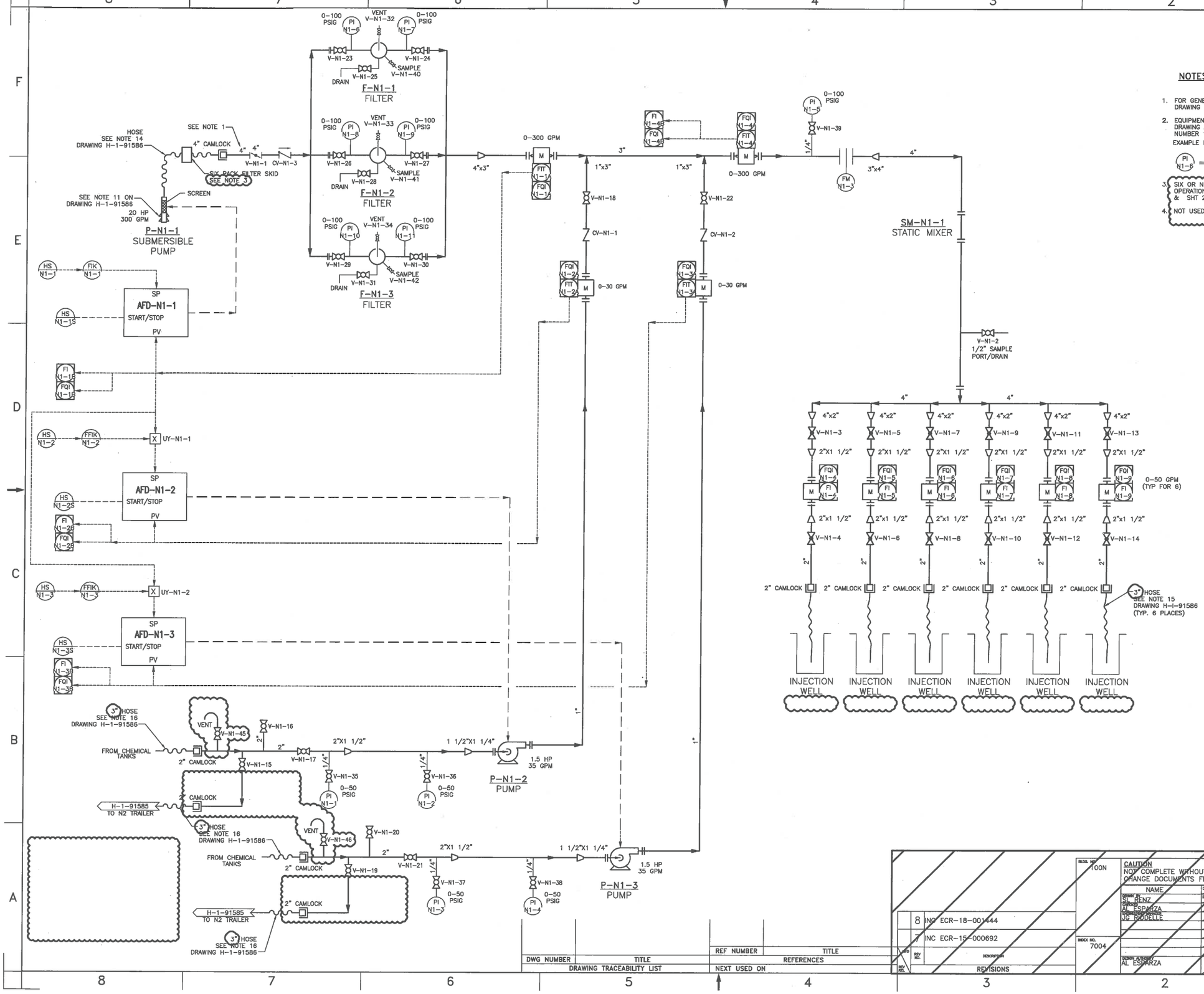

NOTES:

1. FOR GENERAL MECHANICAL NOTES FOR TRAILER NO.1 SEE DRAWING H-1-91586.
2. EQUIPMENT IDENTIFIER TAG NUMBERS SHOWN ON THIS DRAWING ARE DESIGNATED AS N1 FOR INJECTION TRAILER NUMBER 1.
   EXAMPLE EQUIPMENT TAGS:
   PI N1-6 = P1-N1-6
3. SIX OR NINE PACK FILTER SKIDS ARE OPTIONAL BASED ON OPERATIONAL NEEDS. IF REQUIRED, SEE H-6-16781 SHT 1 & SHT 2.
4. NOT USED

DWG NUMBER	TITLE
DRAWING TRACEABILITY LIST	

REF NUMBER	TITLE
NEXT USED ON	REFERENCES

NO	REV NO.	DESCRIPTION
8	INC ECR-18-001444	
7	INC ECR-15-000692	

REVISIONS

BLDG. NO. 100N

INDEX NO. 7004

CAUTION
NOT COMPLETE WITHOUT CURRENT CHANGE DOCUMENTS FROM DATABASE

ATTENTION
DESTROY THIS DOCUMENT BY SHREDDING MAY CONTAIN SENSITIVE INFORMATION

NAME	DATE
DRAWN BY RENZ	
CHECKED AL ESPARZA	
DESIGN ENGINEER JG RIDDELLE	
DESIGN AUTHORITY AL ESPARZA	

U.S. DEPARTMENT OF ENERGY
Richland Operations Office

CHEMICAL INJECTION SYSTEM
P & ID
INJECTION TRAILER N1

SIZE F | DRAWING NUMBER H-1-91584 | SHEET 1 | REV 7

SCALE NONE

PLOTTED

DOE_TB_F.DWG (JAN 2013)

ECR-18-001444 PAGE 38

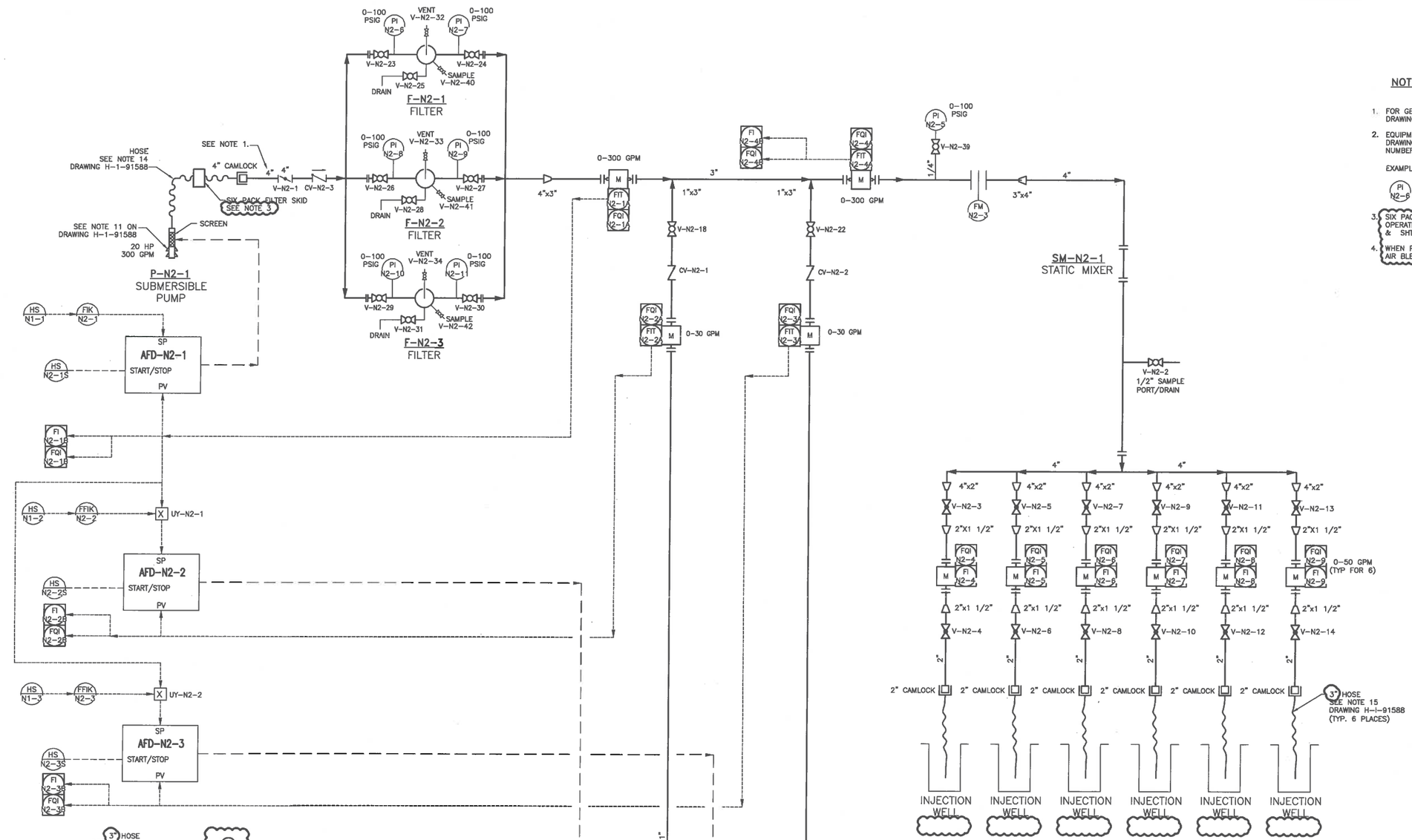

NOTES:

1. FOR GENERAL MECHANICAL NOTES FOR TRAILER NO.2 SEE DRAWING H-1-91588.
2. EQUIPMENT IDENTIFIER TAG NUMBERS SHOWN ON THIS DRAWING ARE DESIGNATED AS N2 FOR INJECTION TRAILER NUMBER 2.

   EXAMPLE EQUIPMENT TAGS:

   PI N2-6 = P1-N2-6
3. SIX PACK FILTER SKIDS ARE OPTIONAL BASED ON OPERATIONAL NEEDS. IF REQUIRED, SEE H-6-16781 SHT 1 & SHT 2.
4. WHEN PIGGYBACKING SECOND INJECTION TRAILER, CHEMICAL AIR BLEED VENT VALVE MAY BE DISCONNECTED.

DWG NUMBER	TITLE	REF NUMBER	TITLE
DRAWING TRACEABILITY LIST		REFERENCES	
		NEXT USED ON	

REV NO.	DESCRIPTION
7	INC ECR-18-001444
6	INC ECR-15-000692

REVISIONS

BLDG. NO. 100N

INDEX NO. 7004

CAUTION
NOT COMPLETE WITHOUT CURRENT CHANGE DOCUMENTS FROM DATABASE

ATTENTION
DESTROY THIS DOCUMENT BY SHREDDING MAY CONTAIN SENSITIVE INFORMATION

NAME	DATE	COMPANY
DRAWN BY SJ RENZ	4/19/18	CH2MHILL
DESIGNED AL ESPARZA		CH2MHILL
CHECKED AL ESPARZA		CH2MHILL
CHECKED JG RUDELLE		CH2MHILL
DESIGN AUTHORITY AL ESPARZA		CH2MHILL

U.S. DEPARTMENT OF ENERGY
Richland Operations Office

CHEMICAL INJECTION SYSTEM
P & ID
INJECTION TRAILER N2

SIZE F | DRAWING NUMBER H-1-91585 | SHEET 1 | REV 6

SCALE NONE

PLOTID

DOE_7B_F.DWG (JAN 2013)

ECR-18-001444 PAGE 39

XXXX PLOTID XXXX

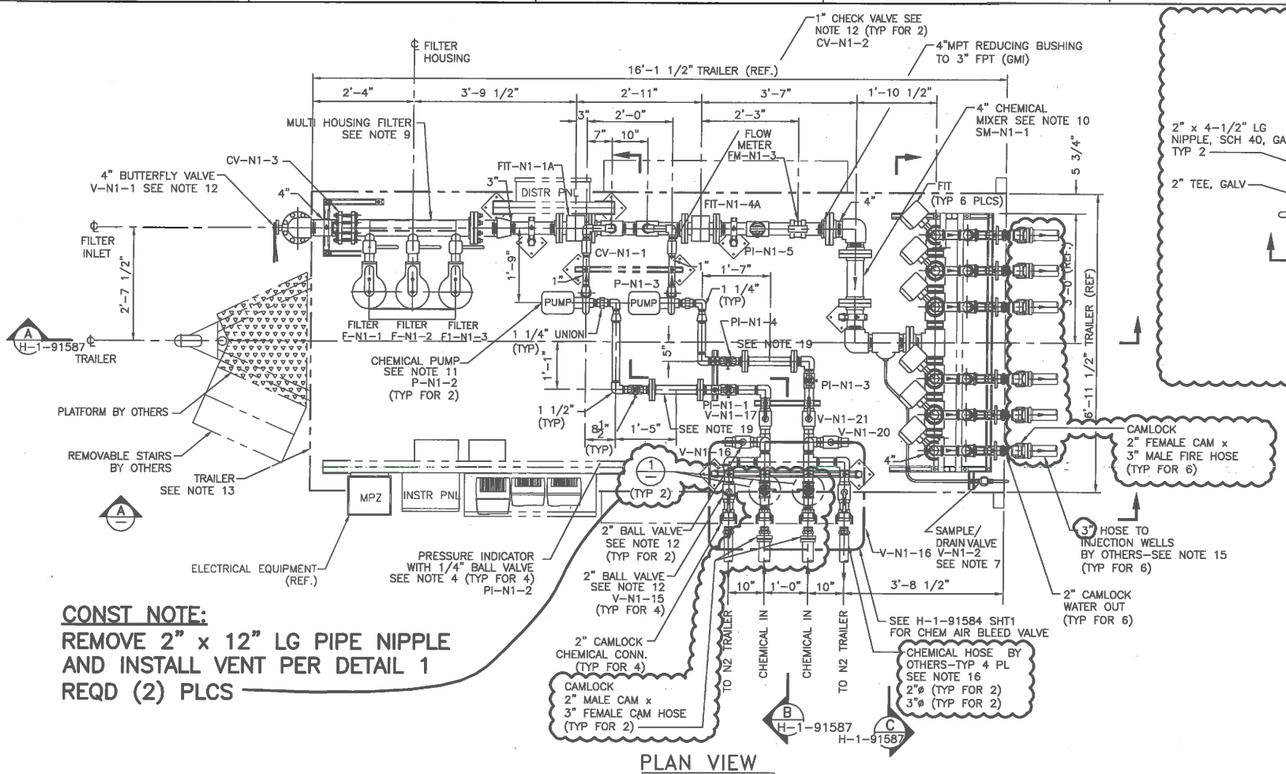

PLAN VIEW
SCALE: 3/4"=1'-0"

CONST NOTE:
REMOVE 2" x 12" LG PIPE NIPPLE AND INSTALL VENT PER DETAIL 1 REQD (2) PLCS

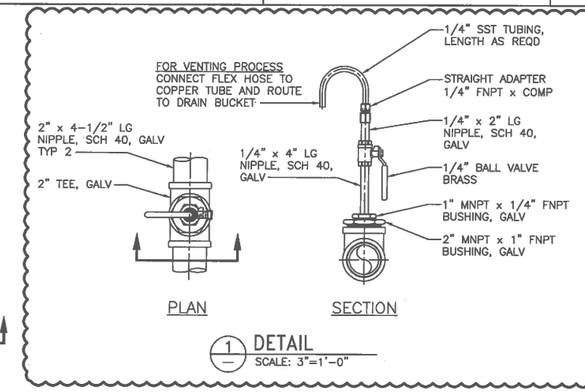

1 DETAIL
SCALE: 3"=1'-0"

NOTES:

1. FOR PIPE AND EQUIPMENT SUPPORTS SEE DRAWINGS H-I-91580, H-1-91581, H-1-91582 & H-1-91583. SEE REFERENCE DRAWING H-1-H-1-91593 FOR ELECTRICAL EQUIPMENT AND SUPPORT STRUCTURE.
2. PIPING MATERIAL SHALL BE AS FOLLOWS: (UNLESS OTHERWISE SPECIFIED)
   PIPING = GALVANIZED SCHED 40 CARBON STEEL SEAMLESS PER ASTM A53.
   PIPE FITTINGS = GALVANIZED MALLEABLE IRON (GMI)
   TUBING = 0.040" WALL, SEAMLESS COPPER, TYPE L
   TUBE FITTINGS = SWAGELOK OR APPROVED EQUAL.
3. NOT USED.
4. PRESSURE INDICATORS (PI-N1-1, THRU P1-N1-4) SHALL BE 0-50 PSIG 1/4" CONNECTION WITH 1/4" BALL VALVE
   PRESSURE INDICATORS (PI-N1-5, THRU P1-N1-11) SHALL BE 0-100 PSIG
5. MAGNETIC FLOW INDICATOR/FLOW TUBE SIZE 1 1/2" FLANGE CONNECTION (FI-N1-4 THRU FI-N1-9) SHALL BE 0-50 GPM ROSEMOUNT MODEL NO. 8705THA-015-C-1-WO-NA-B3-D1-Q4//8732EST-2-A-1-NA-DA1-D1-M4
6. MAGNETIC FLOW INDICATING TRANSMITTER/FLOW TUBE SIZE 1" FLANGE CONN. (FIT-N1-2A AND FIT-N1-3A) SHALL BE 0-30 GPM ROSEMOUNT MODEL NO. 8705TH-010-C-1-WO-NA-B3-D1-Q4//8732EST-2-A-1-NA-DA1-D1-M4

   MAGNETIC FLOW INDICATING TRANSMITTER/FLOW TUBE SIZE 3" FLANGE CONN. (FIT-N1-1A AND FIT-N1-4A) SHALL BE 0-300 GPM ROSEMOUNT MODEL NO. 8705TH-030-C-1-WO-NA-B3-D1-Q4//8732EST-2-A-1-NA-DA1-D1-M4
7. SAMPLE VALVE (NEEDLE VALVE) SHALL BE SWAGELOK 1/2" ODT NO. B-1RS-8 OR EQUAL.
8. NOT USED.
9. FILTER SHALL BE FILTRATION SYSTEMS LIQUID BAG MULTI-HOUSING WITH 50 MICRON (OR AS DETERMINED BY OPS) FILTER BAGS FILTER SYSTEM. MODEL S-324-V-150, 0-300 GPM. (F-N1-1, F-N1-2, F-N1-3) COMPLETE WITH DRAIN/VENT VALVES AND PRESSURE GAUGES.
10. STATIC IN LINE CHEMICAL MIXER SM-N1-1 SHALL BE KENICS MODEL 4-KMS-2-CS ENDS FLANGED RFSO, 300 GPM.
11. CHEMICAL PUMPS P-N1-2 AND P-N1-3 SHALL BE PRICE PUMP (PUMP INDUSTRIES) MODEL CD100ss 1 X 1 1/4 X 5, 1.5 hp 35GPM @ 40 ft TDH 3 PHASE 230/460.

    SUBMERSIBLE PUMP P-N1-1 SHALL BE GRUNDFOS NO. 385S200-3A 0-300 GPM.
12. GLOBE VALVES SHALL BE SIZE 2" NIBCO T-235-Y BRONZE WITH THREADED CONNECTIONS OR APPROVED EQUAL TYP. FOR 12.

    BALL VALVES SHALL BE SIZES 1/4", 1" AND 2" AS SHOWN, FORGED BRONZE 2 PIECE WITH THREADED CONNECTIONS.

    BUTTERFLY VALVE (V-N1-1) SHALL BE SIZE 4" LUGGED STYLE, HANDLE ACTUATED KEYSTONE # 222 OR APPROVED EQUAL.

    CHECK VALVES SHALL BE SIZE 1" BRONZE WITH FEMALE NPT CONNECTIONS. TYP. FOR 2.
13. TRAILER SHALL BE A BIG TEX MFG. CO. TANDEM AXLE MODEL NO. 60CH-16 WITH CORNER ADJUSTABLE FLOOR JACKS. TYP. FOR 2.
14. HOSE FROM SUBMERSIBLE PUMP SEE H-3-317685-1 NOTE 2.
15. HOSE TO INJECTION WELLS TO BE GOODYEAR PLICORD VERSIFLO 225, DOUBLE JACKET FIRE HOSE OR ENGINEERING APPROVED EQUIVALENT.
16. CHEMICAL HOSE TO BE CLEAR, VACUUM RATED AT 28 IN/hg.
17. SCREEN FOR SUBMERSIBLE PUMP PROVIDED BY OTHERS.
18. PARTS TO BE AS LISTED OR APPROVED EQUAL BY ENGINEERING.
19. REPLACE PRV WITH SPOOL PIECE.
20. PUMPS TO BE TESTED PRIOR TO RIVER PLACEMENT. EACH PUMP SHOULD GENERATE APPROX 260GPM.

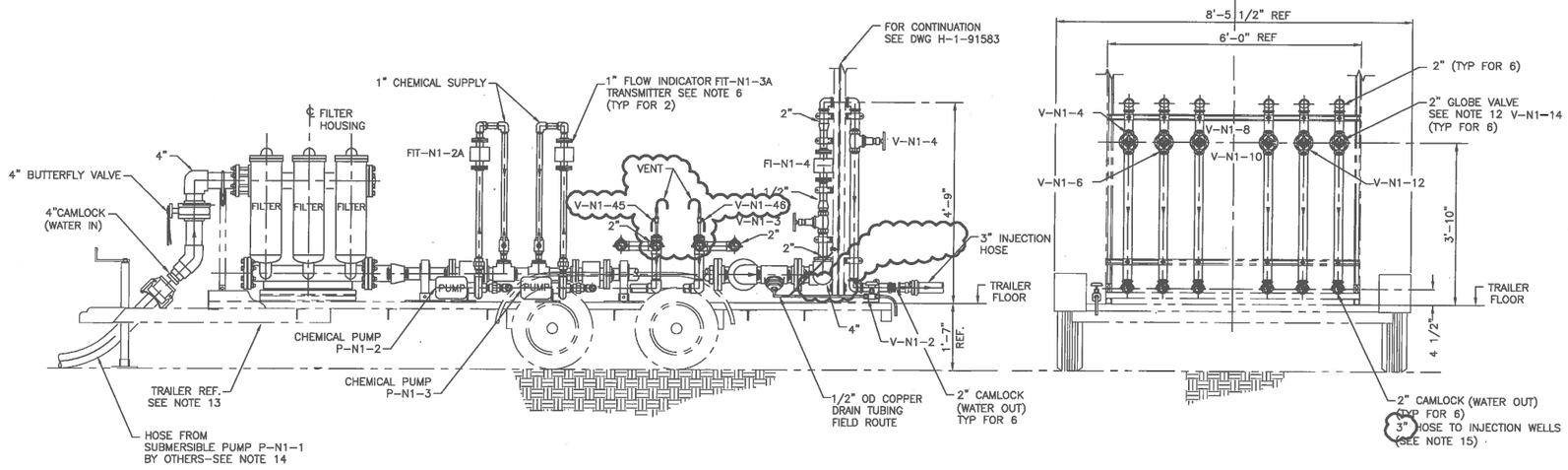

A ELEVATION
SCALE: 3/4"=1'-0"
NOTE: ELECTRICAL EQUIPMENT NOT SHOWN FOR CLARITY.

END VIEW
SCALE: 3/4"=1'-0"

DWG NUMBER	TITLE	REF NUMBER	TITLE
DRAWING TRACEABILITY LIST		NEXT USED ON	REFERENCES

REV NO.	REV INI.	DESCRIPTION
6	INC	ECR-18-001444
5	INC	ECR-15-000692

REVISIONS

BLDG. NO. 100N
INDEX NO. 8400

CAUTION
NOT COMPLETE WITHOUT CURRENT CHANGE DOCUMENTS FROM DATABASE

ATTENTION
DESTROY THIS DOCUMENT BY SHREDDING MAY CONTAIN SENSITIVE INFORMATION

	NAME	DATE	COMPANY
DRAWN BY	S. RENZ	4/17/18	CH2PRC
DESIGN	AL ESPARZA		CH2PRC
ENGINEERING			CH2PRC
ENGINEERING	JG RUDELLE		CH2PRC
DESIGN AUTHORITY	AL ESPARZA		CH2PRC

U.S. DEPARTMENT OF ENERGY
Richland Operations Office

CHEMICAL INJECTION SYSTEM
MECHANICAL
INJECTION TRAILER N1

SIZE F | DRAWING NUMBER H-1-91586 | SHEET 1 | REV 5
SCALE SHOWN

PLOTID
DOC_TBL_F.DWG (JAN 2012)

ECR-18-001444 PAGE 40

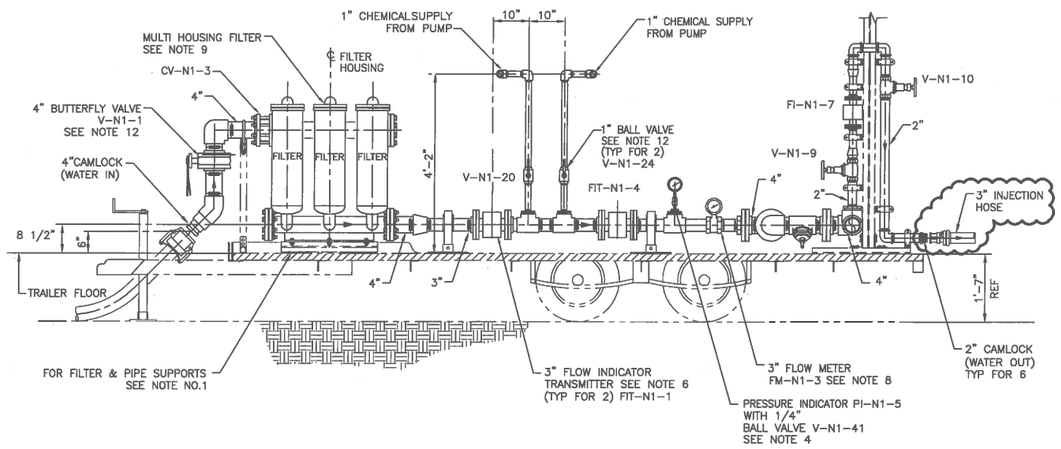

A SECTION
H-1-91586 SCALE: 3/4"=1'-0"
NOTE: ELECTRICAL EQUIPMENT NOT SHOWN FOR CLARITY.

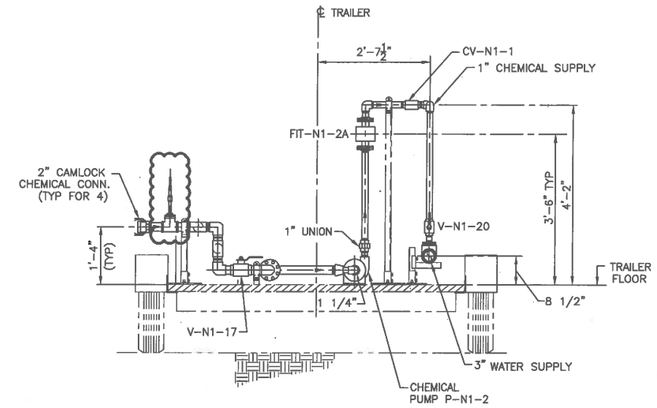

B SECTION
H-1-91586

NOTES:

1. FOR GENERAL NOTES SEE DRAWING H-1-91586

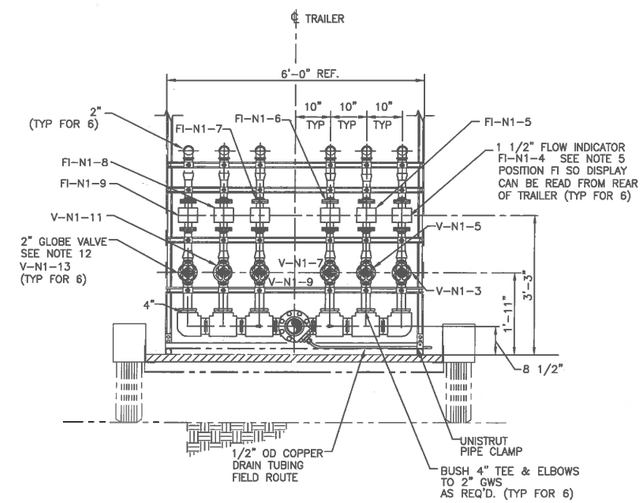

C SECTION
H-1-91586

DWG NUMBER	TITLE
DRAWING TRACEABILITY LIST	

REF NUMBER	TITLE
REFERENCES	
NEXT USED ON	

REV NO.	REV INIT.	DESCRIPTION
5	INC	ECR-18-001444
4	INC	ECR-15-000692

REVISIONS

BLDG. NO. 100N

INDEX NO. 8400

CAUTION
NOT COMPLETE WITHOUT CURRENT CHANGE DOCUMENTS FROM DATABASE

ATTENTION
DESTROY THIS DOCUMENT BY SHREDDING MAY CONTAIN SENSITIVE INFORMATION

	NAME	DATE
DRAWN BY	SL RENZ	4/12/18
CHECKED	AL ESPARZA	
ENGINEERING APPROVED	JG DOUELLE	
DESIGN AUTHORITY	AL ESPARZA	

U.S. DEPARTMENT OF ENERGY
Richland Operations Office

CHEMICAL INJECTION SYSTEM MECHANICAL TRAILER N1 SECTIONS

SIZE F | DRAWING NUMBER H-1-91587 | SHEET 1 | REV 4

SCALE NOT SHOWN

PLOTID

DOE_TBL_F.DWG (JAN 2012)

ECR-18-001444 PAGE 41

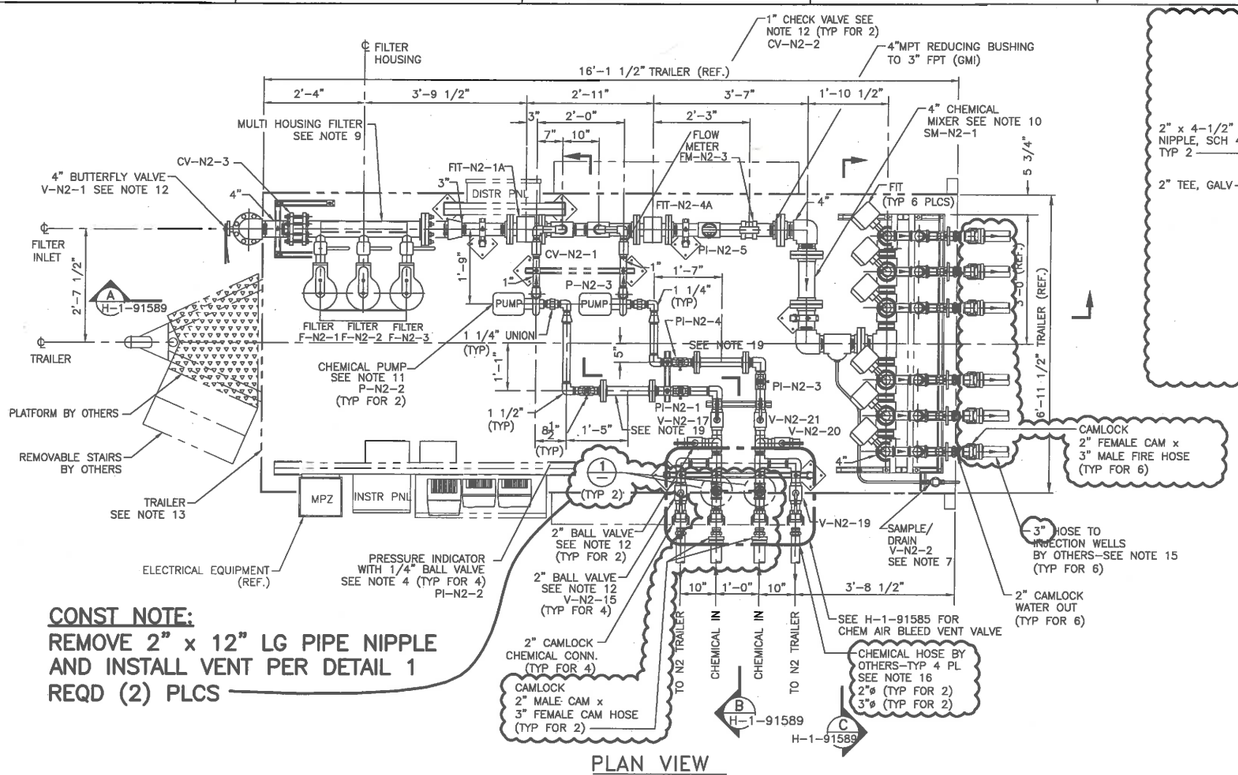

CONST NOTE:
REMOVE 2" x 12" LG PIPE NIPPLE AND INSTALL VENT PER DETAIL 1 REQD (2) PLCS

PLAN VIEW
SCALE: 3/4"=1'-0"

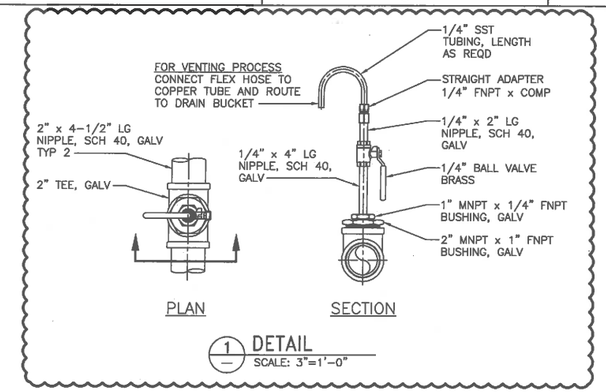

1 DETAIL
SCALE: 3"=1'-0"

NOTES:

1. FOR PIPE AND EQUIPMENT SUPPORTS SEE DRAWINGS H-I-91580, H-1-91581, H-1-91582 & H-1-91583. SEE REFERENCE DRAWING H-1-91594 FOR ELECTRICAL EQUIPMENT AND SUPPORT STRUCTURE.
2. PIPING MATERIAL SHALL BE AS FOLLOWS: (UNLESS OTHERWISE SPECIFIED)
   PIPING = GALVANIZED SCHED 40 CARBON STEEL SEAMLESS PER ASTM A53.
   PIPE FITTINGS = GALVANIZED MALLEABLE IRON (GMI)
   TUBING = 0.040" WALL, SEAMLESS COPPER, TYPE L
   TUBE FITTINGS = SWAGELOK OR APPROVED EQUAL.
3. NOT USED.
4. PRESSURE INDICATORS (PI-N2-1, THRU P1-N2-4) SHALL BE 0-50 PSIG 1/4" CONNECTION WITH 1/4" BALL VALVE
   PRESSURE INDICATORS (PI-N2-5, THRU P1-N2-11) SHALL BE 0-100 PSIG
5. MAGNETIC FLOW INDICATOR/FLOW TUBE SIZE 1 1/2" FLANGE CONNECTION (FI-N1-4 THRU FI-N1-9) SHALL BE 0-50 GPM ROSEMOUNT MODEL NO. 8705THA-015-C-1-WO-NA-B3-01-Q4//8732EST-2-A-1-NA-DA1-D1-M4
6. MAGNETIC FLOW INDICATING TRANSMITTER/FLOW TUBE SIZE 1" FLANGE CONN. (FIT-N2-2A AND FIT-N2-3A) SHALL BE 0-30 GPM ROSEMOUNT MODEL NO. 8705TH-010-C-1-WO-NA-B3-D1-Q4//8732EST-2-A-1-NA-DA1-D1-M4

   MAGNETIC FLOW INDICATING TRANSMITTER/FLOW TUBE SIZE 3" FLANGE CONN. (FIT-N2-1A AND FIT-N2-4A) SHALL BE 0-300 GPM ROSEMOUNT MODEL NO. 8705TH-030-C-1-WO-NA-B3-D1-Q4//8732EST-2-A-1-NA-DA1-D1-M4
7. SAMPLE VALVE (NEEDLE VALVE) SHALL BE SWAGELOK 1/2" ODT NO. B-1RS-8 OR EQUAL.
8. NOT USED.
9. FILTER SHALL BE FILTRATION SYSTEMS LIQUID BAG MULTI-HOUSING WITH 50 MICRON (OR AS DETERMINED BY OPS) FILTER BAGS FILTER SYSTEM. MODEL S-324-V-150, 0-300 GPM. (F-N2-1, F-N2-2, F-N2-3) COMPLETE WITH DRAIN/VENT VALVES AND PRESSURE GAUGES.
10. STATIC IN LINE CHEMICAL MIXER SM-N2-1 SHALL BE KENICS MODEL 4-KMS-2-CS ENDS FLANGED RFSO, 300 GPM.
11. CHEMICAL PUMPS P-N2-2 AND P-N2-3 SHALL BE PRICE PUMP (PUMP INDUSTRIES) MODEL CD100ss 1 X 1 1/4 X 5, 1.5 hp 35GPM @ 40 ft TDH 3 PHASE 230/460.

    SUBMERSIBLE PUMP P-N2-1 SHALL BE GRUNDFOS NO. 385S200-3A 0-300 GPM.
12. GLOBE VALVES SHALL BE SIZE 2" NIBCO T-235-Y BRONZE WITH THREADED CONNECTIONS OR APPROVED EQUAL TYP. FOR 12.

    BALL VALVES SHALL BE SIZES 1/4", 1" AND 2" AS SHOWN FORGED BRONZE 2 PIECE WITH THREADED CONNECTIONS.

    BUTTERFLY VALVE (V-N2-1) SHALL BE SIZE 4" LUGGED STYLE, HANDLEA ACTUATED KEYSTONE # 222 OR APPROVED EQUAL.

    CHECK VALVES SHALL BE SIZE 1" BRONZE WITH FEMALE NPT CONNECTIONS. TYP. FOR 2.
13. TRAILER SHALL BE A BIG TEX MFG. CO. TANDEM AXLE MODEL NO. 60CH-16 WITH CORNER ADJUSTABLE FLOOR JACKS. TYP. FOR 2.
14. HOSE FROM SUBMERSIBLE PUMP SEE H-3-317685-1 NOTE 2.
15. HOSE TO INJECTION WELLS TO BE GOODYEAR PLICORD VERSIFLO 125. DOUBLE JACKET FIRE HOSE OR ENGINEERING APPROVED EQUIVALENT.
16. CHEMICAL HOSE TO BE CLEAR, VACUUM RATED AT 28 IN/hg.
17. SCREEN FOR SUBMERSIBLE PUMP PROVIDED BY OTHERS.
18. PARTS TO BE AS LISTED OR APPROVED EQUAL BY ENGINEERING.
19. REPLACE PRV WITH SPOOL PIECE.
20. PUMPS TO BE TESTED PRIOR TO RIVER PLACEMENT. EACH PUMP SHOULD GENERATE APPROX 260GPM.

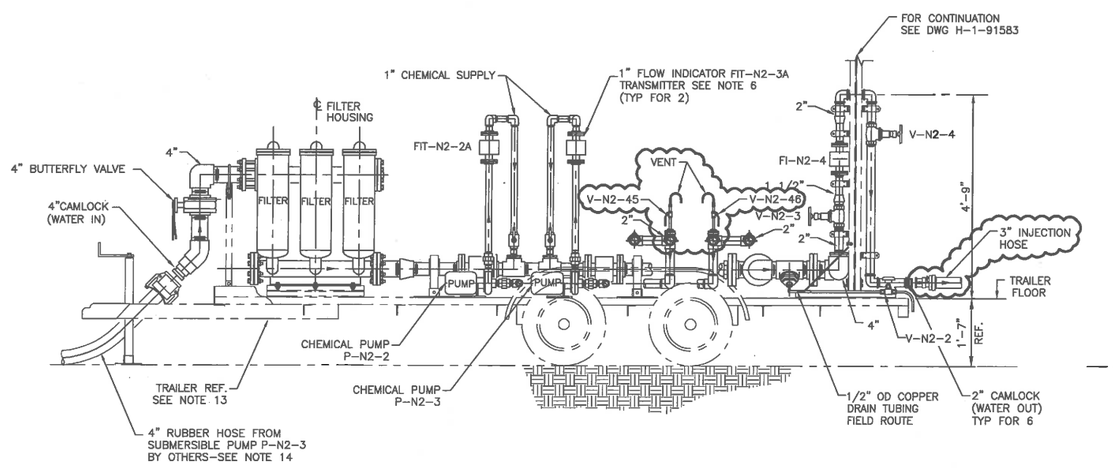

ELEVATION
SCALE: 3/4"=1'-0"
NOTE: ELECTRICAL EQUIPMENT NOT SHOWN FOR CLARITY.

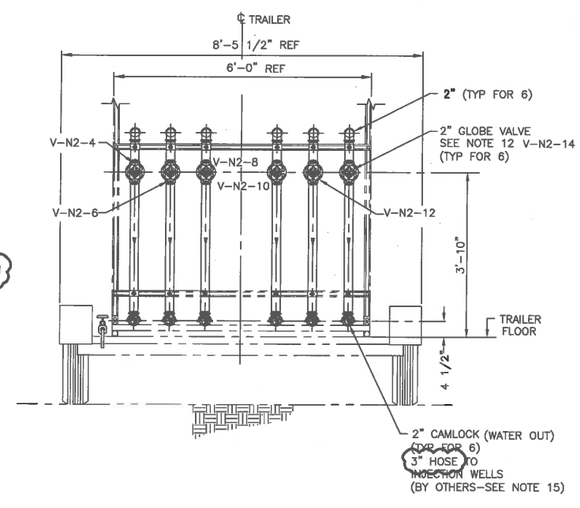

END VIEW
SCALE: 3/4"=1'-0"

DWG NUMBER	TITLE
DRAWING TRACEABILITY LIST	

REF NUMBER	TITLE
NEXT USED ON	REFERENCES

REV NO.	REV DATE	DESCRIPTION
6		INC ECR-18-001444
5		INC ECR-15-000692

REVISIONS

BLDG. NO. 100N
INDEX NO. 8400

CAUTION: NOT COMPLETE WITHOUT CURRENT CHANGE DOCUMENTS FROM DATABASE

ATTENTION: DESTROY THIS DOCUMENT BY SHREDDING MAY CONTAIN SENSITIVE INFORMATION

NAME	DATE	COMPANY
DRAWN BY: DL DEATON	3/5/97	CH2MHILL
DESIGN: RW WHITLOCK		CH2MHILL
ENGINEERING: JG RIDDELLE		CH2MHILL
DESIGN AUTHORITY: RW WHITLOCK		CH2MHILL

U.S. DEPARTMENT OF ENERGY
Richland Operations Office

CHEMICAL INJECTION SYSTEM
MECHANICAL
INJECTION TRAILER N2

SIZE F | DRAWING NUMBER H-1-91588 | SHEET 1 | REV 5
SCALE SHOWN
PLOTTED
DOE_TB_F.DWG (JAN 2012)

ECR-18-001444 PAGE 42

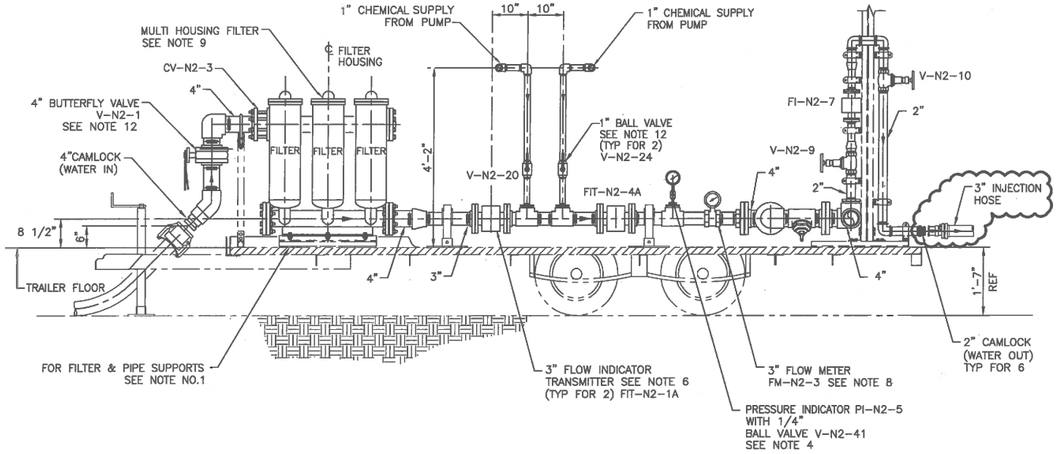

A SECTION
H-1-91588 SCALE: 3/4"=1'-0"
NOTE: ELECTRICAL EQUIPMENT NOT SHOWN FOR CLARITY.

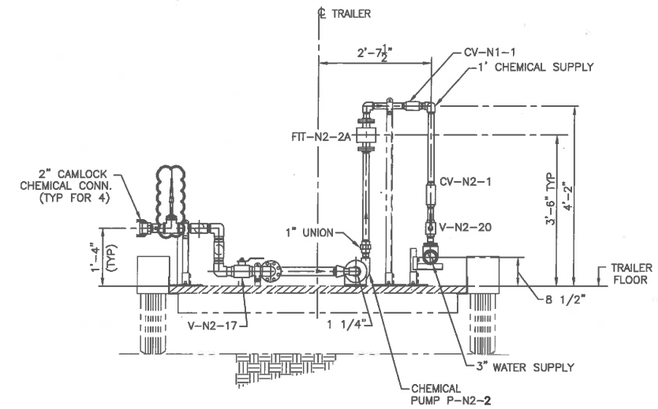

B SECTION
H-1-91588

NOTES:

1. FOR GENERAL NOTES SEE DRAWING H-1-91588

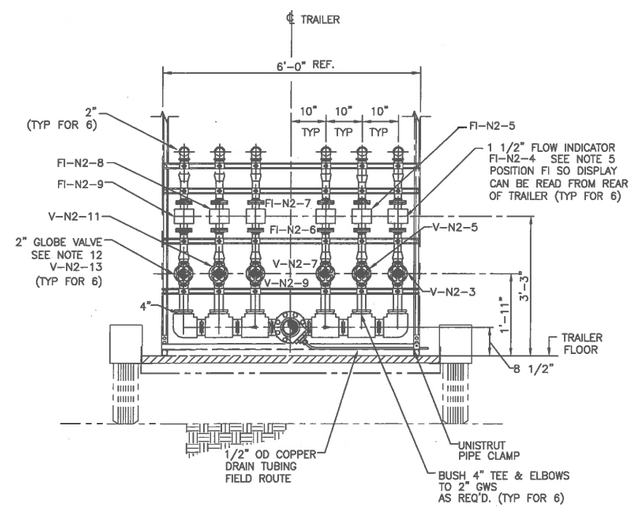

C SECTION
H-1-91588

DWG NUMBER	TITLE
DRAWING TRACEABILITY LIST	

REF NUMBER	TITLE
REFERENCES	
NEXT USED ON	

REV NO.	REV REL	DESCRIPTION
5		INC ECR-18-001444
4		INC ECR-15-000692
REVISIONS		

BLDG. NO. 100N

INDEX NO. 8400

CAUTION
NOT COMPLETE WITHOUT CURRENT CHANGE DOCUMENTS FROM DATABASE

ATTENTION
DESTROY THIS DOCUMENT BY SHREDDING MAY CONTAIN SENSITIVE INFORMATION

	NAME	DATE	COMPANY
DRAWN BY	SD RENZ	4/18/13	
DESIGNED	AL ESPARZA		CHPRC
ENGR REVIEW	AL ESPARZA		CHPRC
ENGR APPROVAL	JG RUDELLE		CHPRC
DESIGN AUTHORITY	AL ESPARZA		CHPRC

U.S. DEPARTMENT OF ENERGY
Richland Operations Office

CHEMICAL INJECTION SYSTEM
MECHANICAL
TRAILER N2 SECTIONS

SIZE	DRAWING NUMBER	SHEET	REV
F	H-1-91589	1	4

SCALE AS SHOWN

PLOTID

DOE_TB_F.DWG (JAN 2012)

ECR-18-001444 PAGE 43

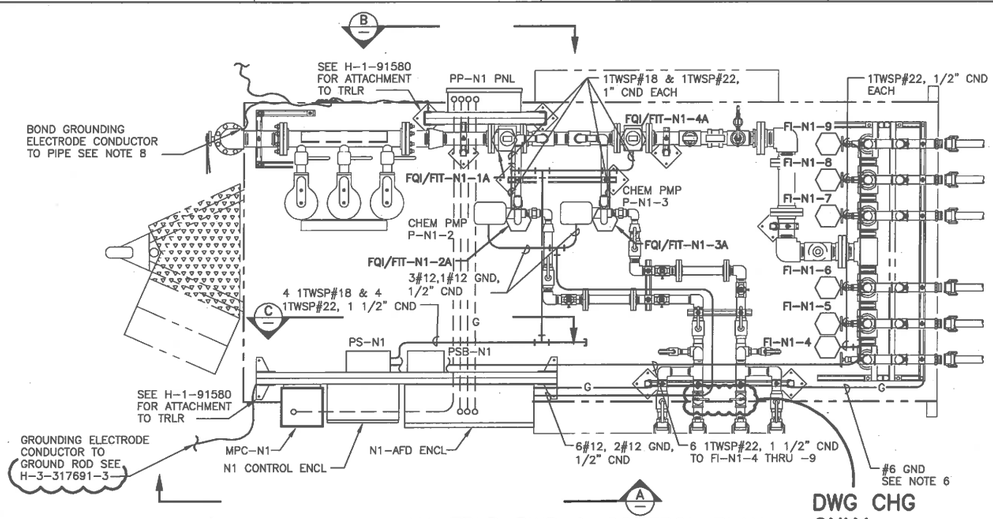

N1 TRLR PWR & CONTROL PLAN
3/4"=1'-0"
FOR INSTRUMENT AND PIPING LOCATION SEE H-1-91586
FOR SITE PLAN SEE H-1-91592

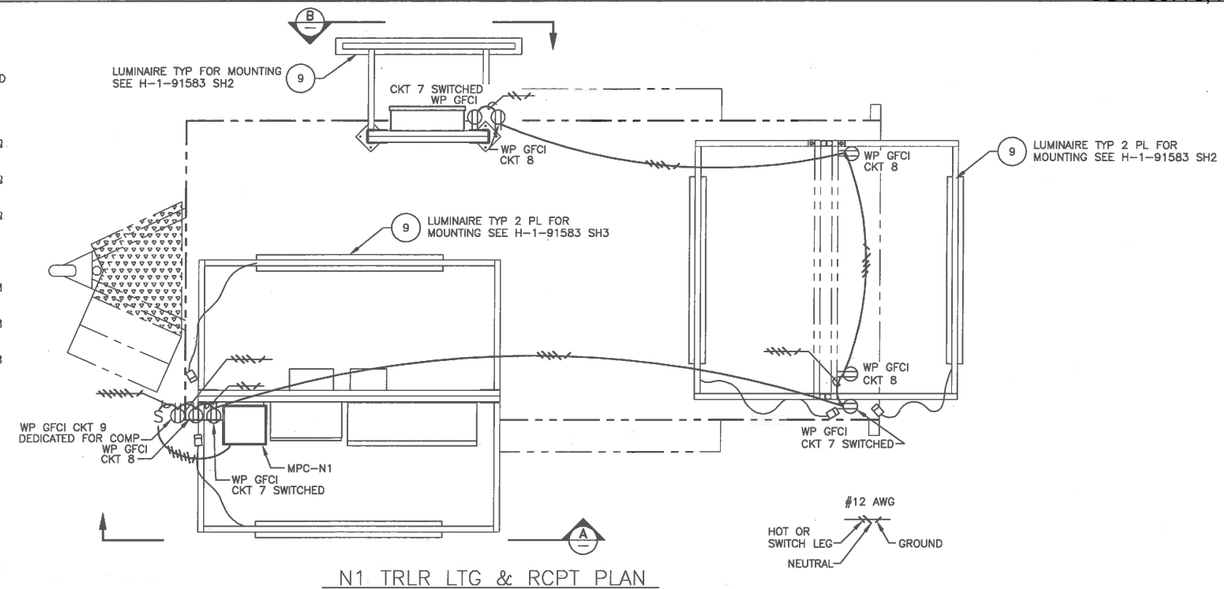

N1 TRLR LTG & RCPT PLAN
3/4"=1'-0"

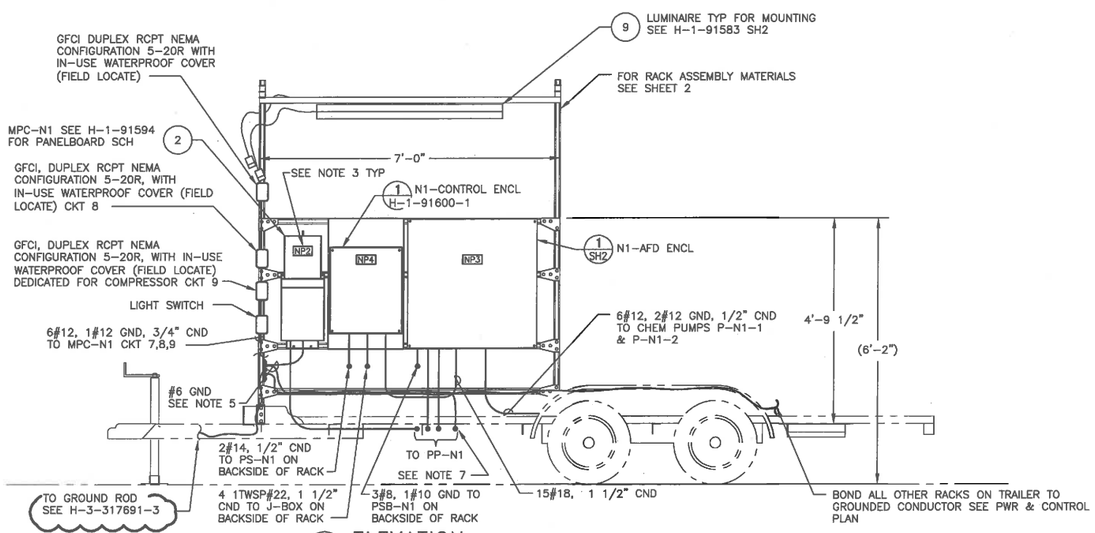

A ELEVATION
SCALE: 3/4"=1'-0"

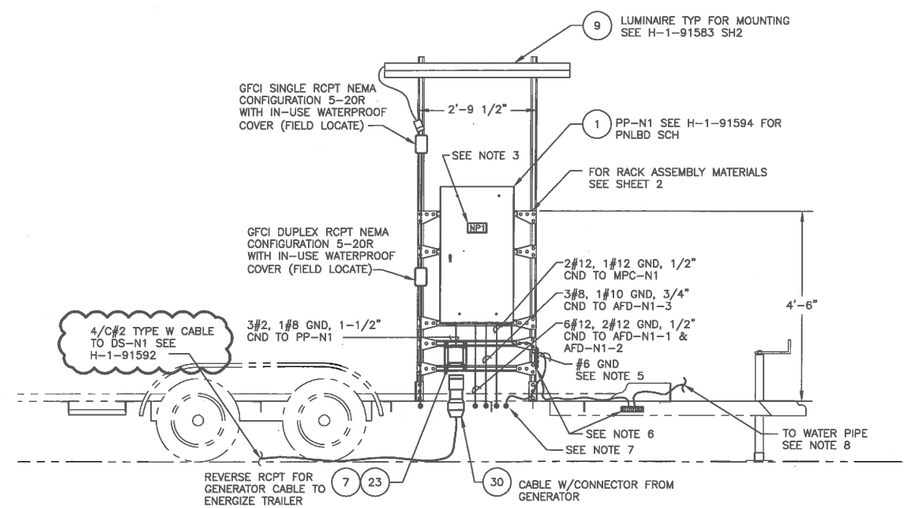

B ELEVATION
SCALE: 3/4"=1'-0"

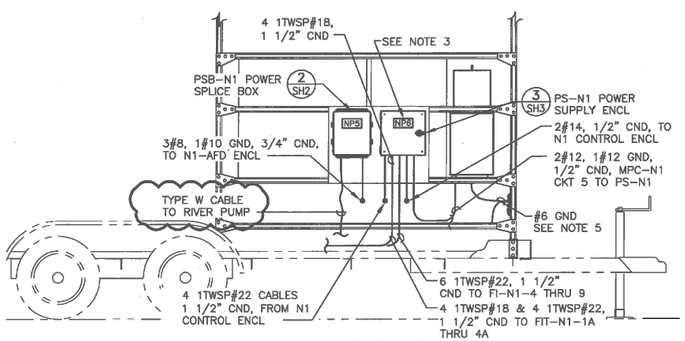

C ELEVATION
SCALE: 3/4"=1'-0"

NOTES:

1. EQUIPMENT AND CONDUIT ARE SHOWN DIAGRAMTICALY FIELD TO DETERMINE FINAL LOCATION AND ROUTING.
2. LABEL RECEPTACLES WITH PANEL AND CIRCUIT NUMBER AND "SWITCHED LIGHTING" WHEN APPLICABLE.
3. SEE SHEET 2 FOR NAMEPLATE LEGEND.
4. SEE SHEET 3 FOR PARTS/MATERIAL LIST
5. GROUNDED ELECTRODE CONDUCTOR SHALL BE CONTINOUS OR IRREVERSIBLY SPLICED FROM TRAILER BUS BAR TO PP-N1 AND MPC-N1.
6. ATTACH SQUARE D CAT# PK7GTA GROUND BUS BAR TO ELECTRICAL RACKS AND TRAILER FRAME AS SHOWN. ROUTE AND BOND GROUNDED BONDING JUMPER CONDUCTOR TO ALL OTHER RACKS.
7. ROUTE GROUNDING ELECTRODE CONDUCTOR IN 3/4" CONDUIT WHEN ROUTING UNDERNEATH TRAILER FROM PP-N1 TO MPC-N1. BOND CONDUCTOR TO CONDUIT ON BOTH SIDES OF TRAILER USING DIRECT CURRENT CAT# H75 THREADED HUB GROUND CLAMP.
8. BOND GROUNDING ELECTRODE CONDUTOR TO WATER PIPE AS SHOWN BEFORE ROUTING TO GROUND BUS BAR ON TRAILER FRAME.

DRAWING TRACEABILITY LIST			
DWG NUMBER	TITLE	REFERENCES	NEXT USED ON
H-1-91573	DRAWING LIST	REF NUMBER	TITLE

REVISIONS		
REV NO.	REV DEL.	DESCRIPTION
4	INC	ECR-18-001444
3	INC	ECR-15-000692

BLDG. NO. 100N
INDEX NO. 7301

CAUTION
NOT COMPLETE WITHOUT CURRENT CHANGE DOCUMENTS FROM DATABASE

ATTENTION
DESTROY THIS DOCUMENT BY SHREDDING MAY CONTAIN SENSITIVE INFORMATION

NAME	DATE	COMPANY
DESIGN ENGINEER S. RENZ	4/18/18	CH2M
DESIGN AUTHORITY CJ AYRES		CH2M
NON-CONFORMANCE JG RIDDELLE		CH2M
DESIGN AUTHORITY CJ AYRES		CH2M

U.S. DEPARTMENT OF ENERGY
Richland Operations Office

CHEMICAL INJECTION SYSTEM
ELEC/CTRL TRLR N1
PLANS & DETAILS

SIZE F | DRAWING NUMBER H-1-91593 | SHEET 1 | REV 3
SCALE NOT SHOWN

PLOTID
DOE_TB_F.DWG (JAN 2012)

ECR-18-001444 PAGE 44

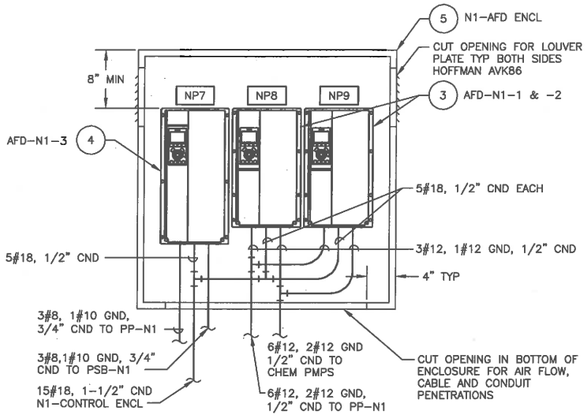

1 SH1 N1-AFD ENCL
SCALE: 1-1/2"=1'-0"

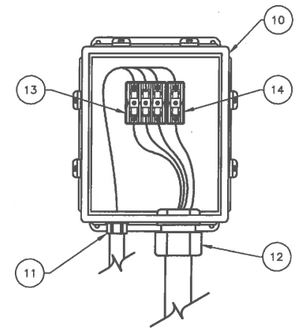

2 — PSB-N1 DETAIL
SCALE: 3"=1'-0"

NAMEPLATE LEGEND		
NP#	NAMEPLATE	TEXT SIZE
NP1	PP-N1 POWER PANEL FED FROM DS-N1	3/16"
NP2	MPC-N1 FED FROM PP-N1	3/16"
NP3	N1-AFD-ENCL	3/16"
NP4	N1-CONTROL ENCL SEE H-1-91600	3/16"
NP5	PSB-N1 POWER SPLICE BOX FED FROM AFD-N1-1	3/16"
NP6	PS-N1 POWER SUPPLY FED FROM MPC-N1, CKT 5	3/16"
NP7	AFD-N1-1 FED FROM PP-N1 CKT 1	3/16"
NP8	AFD-N1-2 FED FROM MPC-N1 CKT 2	3/16"
NP9	AFD-N1-3 FED FROM MPC-N1 CKT 8	3/16"
NP10	DS-N1 MAIN DISCONNECT SWITCH FED FROM DS-DR-1	3/16"

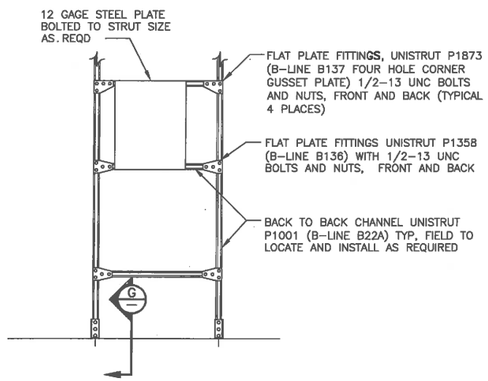

RACK ASSEMBLY
SCALE: 3/4"=1'-0"

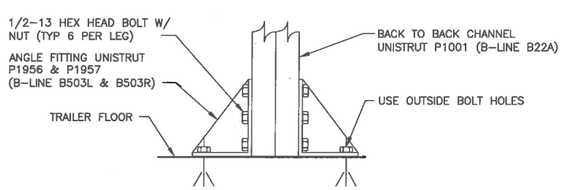

G — ELEVATION
SCALE: NONE

DWG NUMBER	TITLE	REF NUMBER	TITLE
DRAWING TRACEABILITY LIST		REFERENCES	
		NEXT USED ON	

REV NO.	DESCRIPTION
3	INC ECR-18-001444
2	INC ECR-15-000692

REVISIONS

BLDG. NO. 100N
INDEX NO. 7301

CAUTION
NOT COMPLETE WITHOUT CURRENT CHANGE DOCUMENTS FROM DATABASE

ATTENTION
DESTROY THIS DOCUMENT BY SHREDDING MAY CONTAIN SENSITIVE INFORMATION

	NAME	DATE	COMPANY
DRAWN BY	JL RENZ	4/18/05	CHPRC
DESIGN	CJ AYRES		CHPRC
DESIGN VERIFIER			CHPRC
APPROVED	JG RIDDELLE		CHPRC
DESIGN AUTHORITY	CJ AYRES		CHPRC

U.S. DEPARTMENT OF ENERGY
Richland Operations Office

CHEMICAL INJECTION SYSTEM
ELEC/CTRL TRLR N1
PLANS & DETAILS

SIZE F | DRAWING NUMBER H-1-91593 | SHEET 2 | REV 2
SCALE SHOWN
PLOTID

ECR-18-001444 PAGE 46

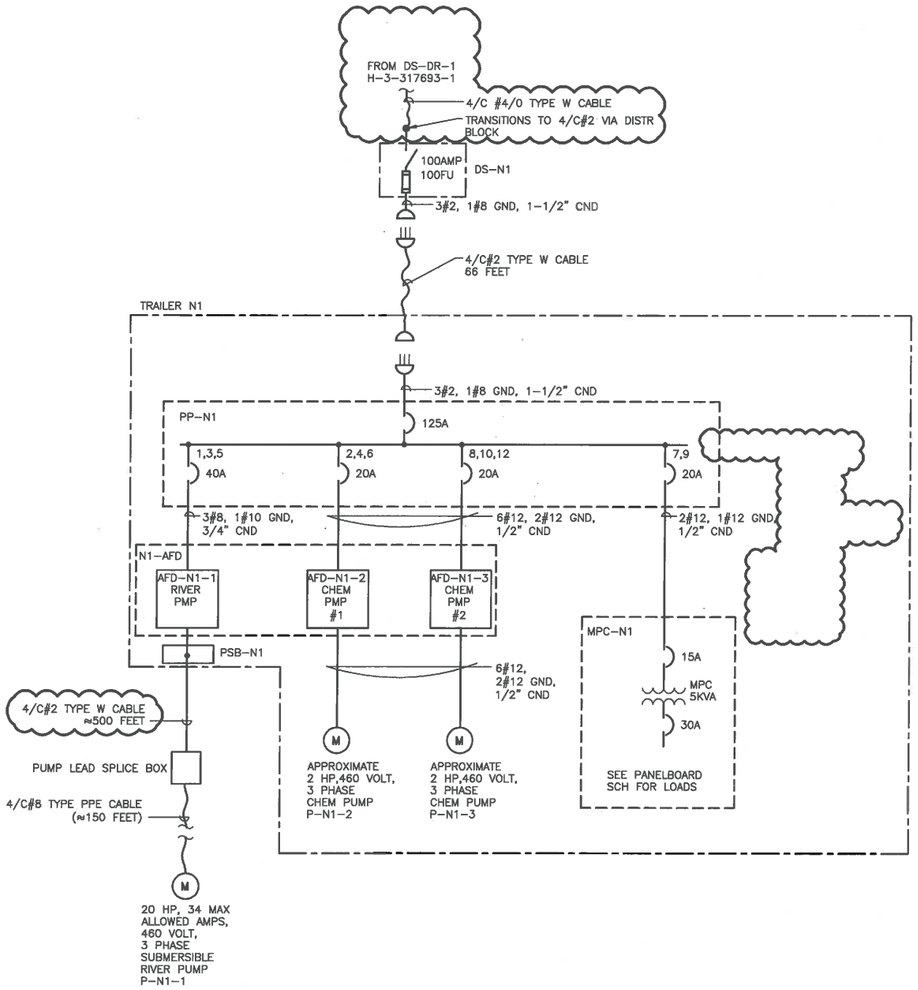

CHEMICAL INJECTION TRLR N1 ONE LINE DIAGRAM

PANEL NO. PP-N1 | VOLTAGE: ☐ 120/208V,3 PHASE ☒ 480V,3 PHASE | GROUND: ☐ LUG ☒ BUS

MOUNTING: ☐ FLUSH ☒ SURFACE | MAINS: ☐ LUGS ONLY ☒ MAIN BREAKER 125 AMP ☒ TOP ☐ BOTTOM | NEUTRAL: ☐ 50 % ☒ 100 %

COVER: ☒ WITH DOOR ☐ WITHOUT DOOR ☒ WITH LOCK ☐ WITHOUT LOCK | U/L LISTED BKR INTERRUPTING RATING 18,000 RMS SYM AMPS MIN SERVICE ENTRANCE RATED, LISTED FOR CONTINUOUS DUTY

LOCATION	LOAD (KVA)	NO.	NO.	LOAD (KVA)	LOCATION
AFD-N1-1, RIVER PUMP	8.6	1	2	.86	AFD-N1-2 CHEM PMP #1
	8.6	3	4	.86	
	8.6	5	6	.86	
MPC-N1	1.7	7	8	.86	AFD-N1-3 CHEM PMP #2
	1.7	9	10	.86	
SPARE	---	11	12	.86	
SPARE	---	13	14	---	SPARE
SPARE	---	15	16	---	SPARE
SPACE	---	17	18	---	SPARE
SPACE	---	19	20	---	SPACE
SPACE	---	21	22	---	SPACE
SPACE	---	23	24	---	SPACE
MAIN		25	26	---	SPACE
		27	28	---	SPACE
		29	30	---	SPACE

A ø B ø C ø; 40A, 20A, 125A

PHASE A TOTAL = 12.02 KVA PHASE B TOTAL = 12.02 KVA PHASE C TOTAL = 10.32 KVA TOTAL LOAD = 34.36 KVA

*PROVIDE GFCI CIRCUIT BREAKER

LOCATION: APATITE TRAILER N1 LAST UPDATED:_____ H-1-91594

PANEL NO: MPC-N1 | VOLTAGE: ☒ 120/240V, 1 PHASE ☐ 480V, 1 PHASE | GROUND: ☐ LUG ☒ BUS

MOUNTING: ☐ FLUSH ☒ SURFACE | MAINS: ☐ LUGS ONLY ☒ MAIN BREAKER 15 AMP PRI BRKR ☒ TOP ☐ BOTTOM | NEUTRAL: ☐ 50 % ☒ 100 %

COVER: ☒ WITH DOOR ☐ WITHOUT DOOR ☒ WITH LOCK ☐ WITHOUT LOCK | U/L LISTED BKR INTERRUPTING RATING 10,000 RMS SYM AMPS MIN

15A A B MAIN PRIMARY BREAKER 18,000 AIC
5 KVA 1 PHASE 480-120/240VAC

LOCATION	LOAD (KVA)	NO.	NO.	LOAD (KVA)	LOCATION
SURGE SUPPRESSOR	--	1	2	--	SECONDARY MAIN
	--	3	4	--	
POWER SUPPLY 24V PS-N1	0.3	5	6		SPARE
LIGHT RCPTS	0.5	7	8	0.7	RCPTS (3)
AIR COMPRESSER RCPT	1.5	9	10	--	SPARE
SPACE	--	11	12	--	SPACE

A ø B ø; 30A, 20A

Phase A Total 1.8 kVA | Phase B Total 1.2 kVA | Total Load = 3.0 kVA

LOCATION: APATITE INJECTION TRAILER N1 LAST UPDATED:_____ H-1-91594

DWG NUMBER	TITLE
H-1-91573	DRAWING LIST

DRAWING TRACEABILITY LIST

REF NUMBER	TITLE
NEXT USED ON	REFERENCES

REV NO.	REV INI.	DESCRIPTION
3	INC	ECR-18-001444
2	INC	ECR-15-000692

REVISIONS

BLDG. NO. 100N

CAUTION: NOT COMPLETE WITHOUT CURRENT CHANGE DOCUMENTS FROM DATABASE

ATTENTION: DESTROY THIS DOCUMENT BY SHREDDING MAY CONTAIN SENSITIVE INFORMATION

	NAME	DATE
DRAWN BY	SJ RENZ	4/18/18
REVIEWED	CJ AYRES	CHPRC
ENGINEERING MANAGER	JG RIDDELLE	CHPRC
DESIGN AUTHORITY	CJ AYRES	CHPRC

INDEX NO. 7201 7304

U.S. DEPARTMENT OF ENERGY
Richland Operations Office

CHEMICAL INJECTION SYSTEM
ONE LINE & PNLBD SCH
TRLR N1

SIZE F | DRAWING NUMBER H-1-91594 | SHEET 1 | REV 2

SCALE NONE

PLOTID

ECR-18-001444 PAGE 47

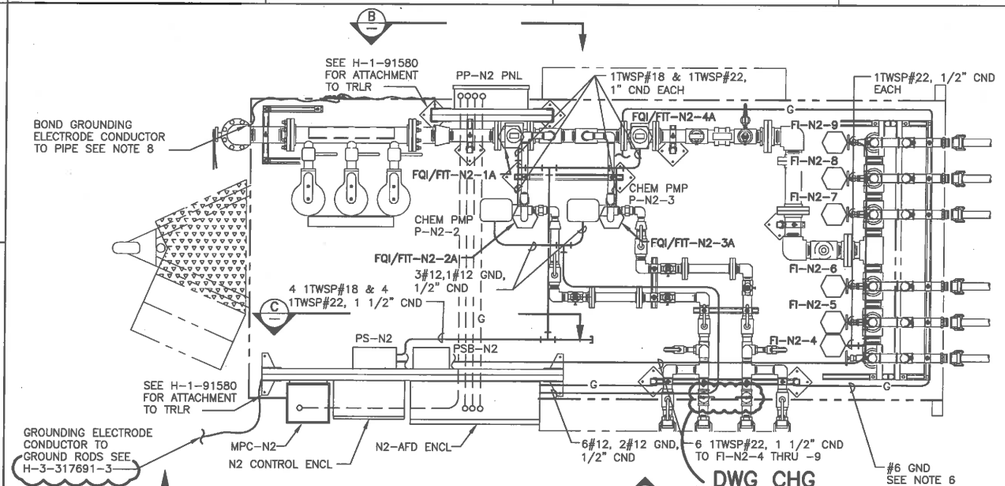

N2 TRLR PWR & CONTROL PLAN

3/4"=1'-0"

FOR INSTRUMENT AND PIPING LOCATION SEE H-1-91586
FOR SITE PLAN SEE H-1-91592

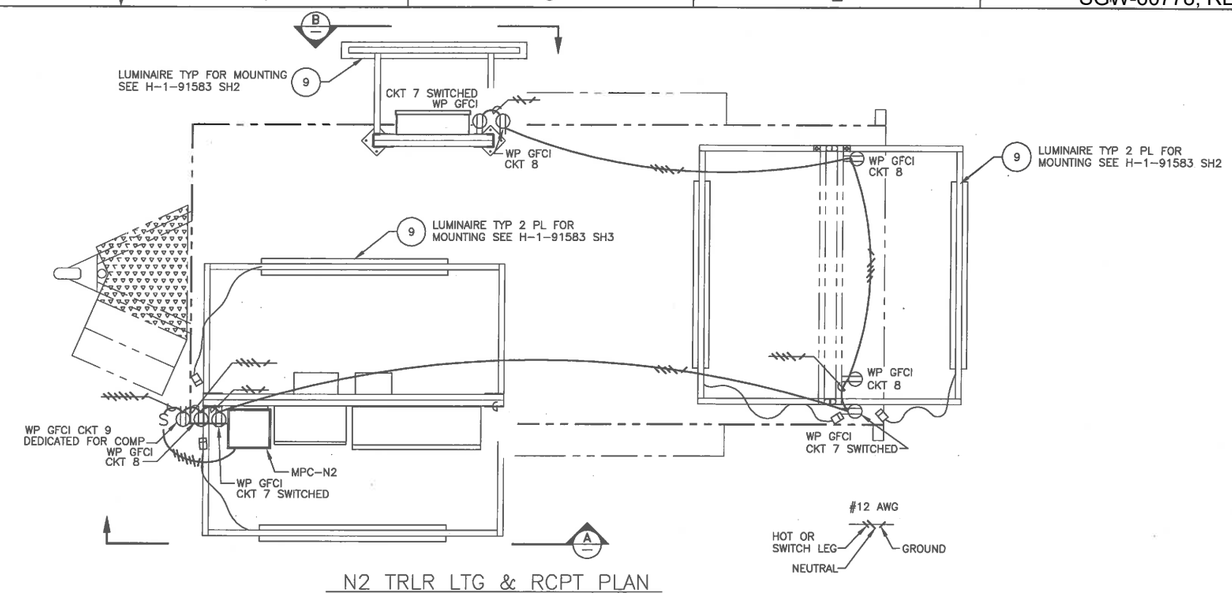

N2 TRLR LTG & RCPT PLAN

3/4"=1'-0"

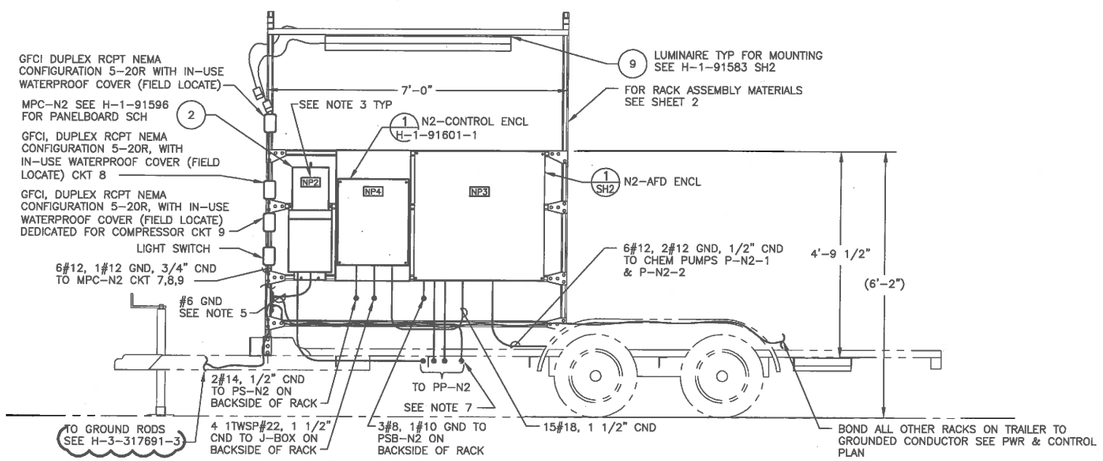

A ELEVATION

SCALE: 3/4"=1'-0"

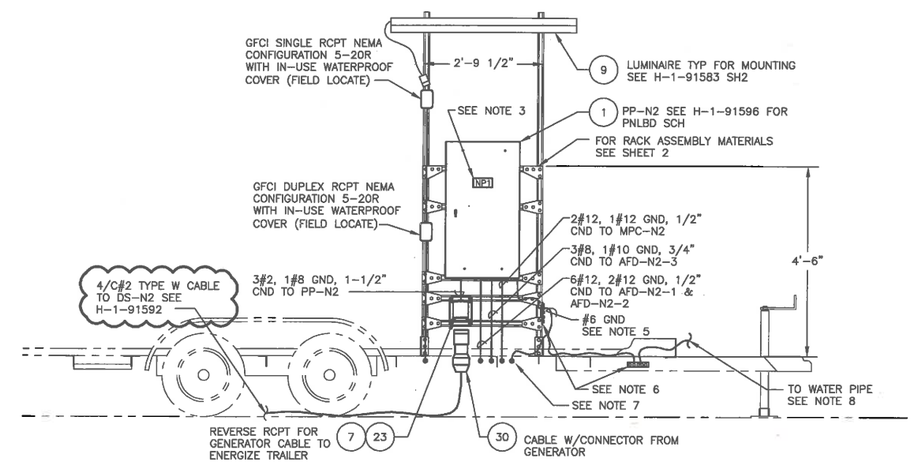

B ELEVATION

SCALE: 3/4"=1'-0"

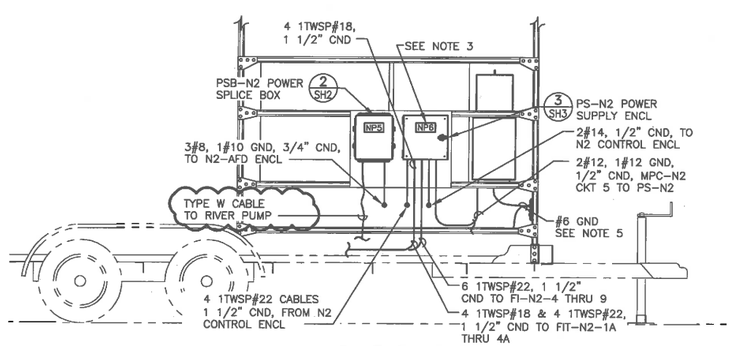

C ELEVATION

SCALE: 3/4"=1'-0"

NOTES:

1. EQUIPMENT AND CONDUIT ARE SHOWN DIAGRAMTICALY FIELD TO DETERMINE FINAL LOCATION AND ROUTING.
2. LABEL RECEPTACLES WITH PANEL AND CIRCUIT NUMBER AND "SWITCHED LIGHTING" WHEN APPLICABLE.
3. SEE SHEET 2 FOR NAMEPLATE LEGEND.
4. SEE SHEET 3 FOR PARTS/MATERIAL LIST
5. GROUNDED ELECTRODE CONDUCTOR SHALL BE CONTINOUS OR IRREVERSIBLY SPLICED FROM TRAILER BUS BAR TO PP-N2 AND MPC-N2.
6. ATTACH SQUARE D CAT# PK7GTA GROUND BUS BAR TO ELECTRICAL RACKS AND TRAILER FRAME AS SHOWN. ROUTE AND BOND GROUNDED BONDING JUMPER CONDUCTOR TO ALL OTHER RACKS.
7. ROUTE GROUNDING ELECTRODE CONDUCTOR IN 3/4" CONDUIT WHEN ROUTING UNDERNEATH TRAILER FROM PP-N2 TO MPC-N2. BOND CONDUCTOR TO CONDUIT ON BOTH SIDES OF TRAILER USING DIRECT CURRENT CAT# H75 THREADED HUB GROUND CLAMP.
8. BOND GROUNDING ELECTRODE CONDUTOR TO WATER PIPE AS SHOWN BEFORE ROUTING TO GROUND BUS BAR ON TRAILER FRAME.

DWG NUMBER	TITLE
DRAWING TRACEABILITY LIST	

REF NUMBER	TITLE
H-1-91573	DRAWING LIST
NEXT USED ON	REFERENCES

REV NO.	DESCRIPTION
4	INC ECR-18-001444
3	INC ECR-15-000692

REVISIONS

BLDG. NO. 100N

INDEX NO. 7301

CAUTION: NOT COMPLETE WITHOUT CURRENT CHANGE DOCUMENTS FROM DATABASE

ATTENTION: DESTROY THIS DOCUMENT BY SHREDDING MAY CONTAIN SENSITIVE INFORMATION

NAME	DATE
DRAWN BY SL RENZ	4/14/98
SUPERVISOR CJ AYRES	
DESIGN PROJECT ENGINEER JC RIDDELLE	
DESIGN AUTHORITY CJ AYRES	

U.S. DEPARTMENT OF ENERGY
Richland Operations Office

CHEMICAL INJECTION SYSTEM
ELEC/CTRL TRLR N2
PLANS & DETAILS

SIZE F | DRAWING NUMBER H-1-91595 | SHEET 1 | REV 3

SCALE SHOWN

PLOTID

DOC_HLD_0.DWG (JAN 2012)

ECR-18-001444 PAGE 48

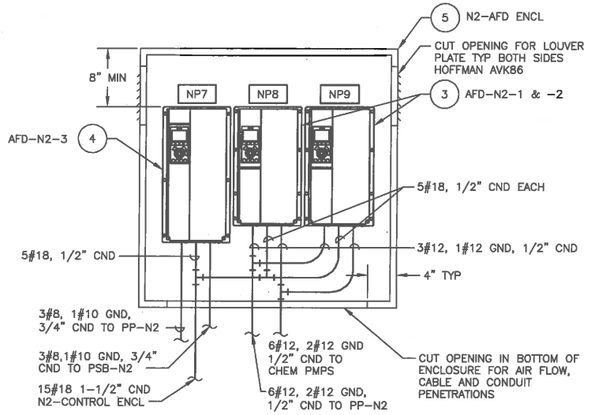

1 SH1 N2-AFD ENCL
SCALE: 1-1/2"=1'-0"

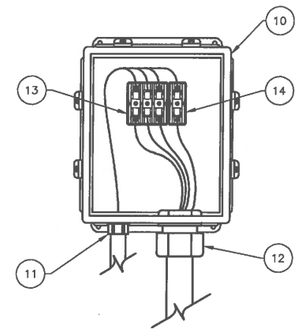

2 — PSB-N2 DETAIL
SCALE: 3"=1'-0"

NAMEPLATE LEGEND		
NP#	NAMEPLATE	TEXT SIZE
NP1	PP-N2 POWER PANEL FED FROM DS-N2	3/16"
NP2	MPC-N2 FED FROM PP-N2	3/16"
NP3	N2-AFD-ENCL	3/16"
NP4	N2-CONTROL ENCL SEE H-1-91601	3/16"
NP5	PSB-N2 POWER SPLICE BOX FED FROM AFD-N2-1	3/16"
NP6	PS-N2 POWER SUPPLY FED FROM MPC-N2, CKT 5	3/16"
NP7	AFD-N2-1 FED FROM PP-N2 CKT 1	3/16"
NP8	AFD-N2-2 FED FROM MPC-N2 CKT 2	3/16"
NP9	AFD-N2-3 FED FROM MPC-N2 CKT 8	3/16"
NP10	DS-N2 MAIN DISCONNECT SWITCH FED FROM DS-DR-2	3/16"

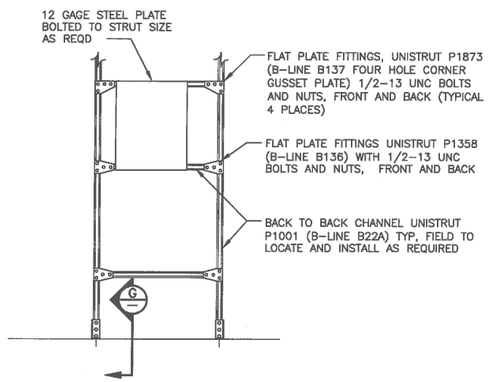

RACK ASSEMBLY
SCALE: 3/4"=1'-0"

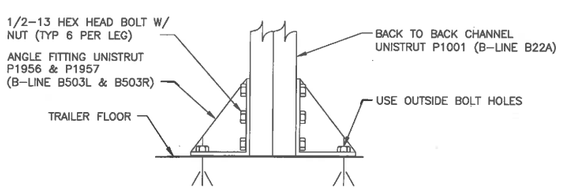

G — ELEVATION
SCALE: NONE

DWG NUMBER	TITLE	REF NUMBER	TITLE
DRAWING TRACEABILITY LIST		REFERENCES	
		NEXT USED ON	

REV	REV REL	DESCRIPTION
3	INC ECR-18-001444	
2	INC ECR-15-000692	

REVISIONS

BLDG. NO. 100N

INDEX NO. 7301

CAUTION
NOT COMPLETE WITHOUT CURRENT CHANGE DOCUMENTS FROM DATABASE

ATTENTION
DESTROY THIS DOCUMENT BY SHREDDING MAY CONTAIN SENSITIVE INFORMATION

	NAME	DATE	COMPANY
DRAWN BY	J RENZ	4/18/13	CHPRC
DESIGN BY	CJ AYRES		CHPRC
TECH REVIEWER			CHPRC
TECH REVIEWER	JG MODELLE		CHPRC
DESIGN AUTHORITY	CJ AYRES		CHPRC

U.S. DEPARTMENT OF ENERGY
Richland Operations Office

CHEMICAL INJECTION SYSTEM
ELEC/CTRL TRLR N2
PLANS & DETAILS

SIZE	DRAWING NUMBER	SHEET	REV
F	H-1-91595	2	2

SCALE SHOWN

PLOTID

ECR-18-001444 PAGE 49

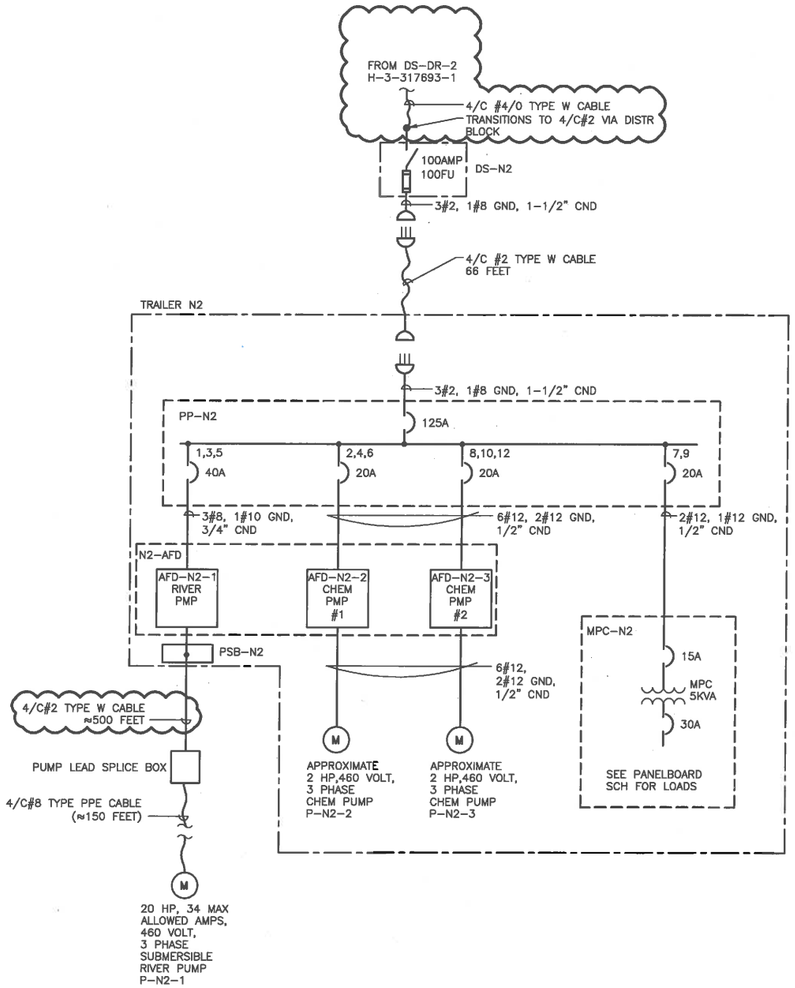

CHEMICAL INJECTION TRLR N2 ONE LINE DIAGRAM

PANEL NO. PP-N2

VOLTAGE: ☐ 120/208V,3 PHASE ☒ 480V,3 PHASE

GROUND: ☐ LUG ☒ BUS

MOUNTING: ☐ FLUSH ☒ SURFACE

MAINS: ☐ LUGS ONLY ☒ MAIN BREAKER 125 AMP

☒ TOP ☐ BOTTOM

NEUTRAL: ☐ 50 % ☒ 100 %

COVER: ☒ WITH DOOR ☐ WITHOUT DOOR

☒ WITH LOCK ☐ WITHOUT LOCK

U/L LISTED BKR INTERRUPTING RATING 18,000 RMS SYM AMPS MIN
SERVICE ENTRANCE RATED, LISTED FOR CONTINUOUS DUTY

LOCATION	LOAD (KVA)	NO.	NO.	LOAD (KVA)	LOCATION
AFD-N2-1, RIVER PUMP	8.6	1	2	.86	AFD-N2-2 CHEM PMP #1
	8.6	3	4	.86	
	8.6	5	6	.86	
MPC-N2	1.7	7	8	.86	AFD-N2-3 CHEM PMP #2
	1.7	9	10	.86	
SPARE	---	11	12	.86	
SPARE	---	13	14	---	SPARE
SPARE	---	15	16	---	SPARE
SPACE	---	17	18	---	SPARE
SPACE	---	19	20	---	SPACE
SPACE	---	21	22	---	SPACE
SPACE	---	23	24	---	SPACE
MAIN		25	26	---	SPACE
		27	28	---	SPACE
		29	30	---	SPACE

PHASE A TOTAL = 12.02 KVA PHASE B TOTAL = 12.02 KVA PHASE C TOTAL = 10.32 KVA TOTAL LOAD = 34.36 KVA

*PROVIDE GFCI CIRCUIT BREAKER

LOCATION: APATITE TRAILER N2 LAST UPDATED:_____ H-1-91596

PANEL NO: MPC-N2

VOLTAGE: ☒ 120/240V, 1 PHASE ☐ 480V, 1 PHASE

GROUND: ☐ LUG ☒ BUS

MOUNTING: ☐ FLUSH ☒ SURFACE

MAINS: ☐ LUGS ONLY ☒ MAIN BREAKER 15 AMP PRI BRKR

☒ TOP ☐ BOTTOM

NEUTRAL: ☐ 50 % ☒ 100 %

COVER: ☒ WITH DOOR ☐ WITHOUT DOOR

☒ WITH LOCK ☐ WITHOUT LOCK

U/L LISTED BKR INTERRUPTING RATING 10,000 RMS SYM AMPS MIN

15A MAIN PRIMARY BREAKER 18,000 AIC
5 KVA, 1 PHASE 480-120/240VAC

LOCATION	LOAD (kVA)	NO.	NO.	LOAD (kVA)	LOCATION
SURGE SUPPRESSOR	--	1	2	--	SECONDARY MAIN
	--	3	4	--	
POWER SUPPLY 24V PS-N2	0.3	5	6		SPARE
LIGHT RCPTS	0.5	7	8	0.7	RCPTS
AIR COMPRESSER RCPT	1.5	9	10	--	SPARE
SPACE	--	11	12	--	SPACE

Phase A Total 1.8 kVA | Phase B Total 1.2 kVA | Total Load = 3.0 kVA

LAST UPDATED:_____ H-1-91596

LOCATION: APATITE INJECTION TRAILER N2

DWG NUMBER	TITLE
DRAWING TRACEABILITY LIST	

REF NUMBER	TITLE
H-1-91573	DRAWING LIST
REFERENCES	
NEXT USED ON	

REV NO.	DESCRIPTION
3	INC ECR-18-001444
2	INC ECR-15-000692
REVISIONS	

BLDG. NO. 100N

INDEX NO. 7201 7304

CAUTION
NOT COMPLETE WITHOUT CURRENT CHANGE DOCUMENTS FROM DATABASE

ATTENTION
DESTROY THIS DOCUMENT BY SHREDDING MAY CONTAIN SENSITIVE INFORMATION

NAME	DATE	COMPANY
DRAWN BY SL RENZ	4/18/18	CHPRC
DESIGN AUTHORITY CJ AYRES		CHPRC
DESIGN AUTHORITY MG RIDDELLE		CHPRC
DESIGN AUTHORITY CJ AYRES		CHPRC

U.S. DEPARTMENT OF ENERGY
Richland Operations Office

CHEMICAL INJECTION SYSTEM
ONE LINE & PNLBD SCH
TRLR N2

SIZE F DRAWING NUMBER H-1-91596 SHEET 1 REV 2

SCALE NONE

PLOTID

ECR-18-001444 PAGE 50

NOTES:

1. INLET/OUTLET MAY BE CONFIGURED WITH 2" OR 4" CAMLOCK AND VALVES AS NEEDED.
2. LABEL TO BE VINYL OR RIGID PLASTIC, UV RATED. TEXT TO BE 1" HIGH MIN. FIELD LOCATE.

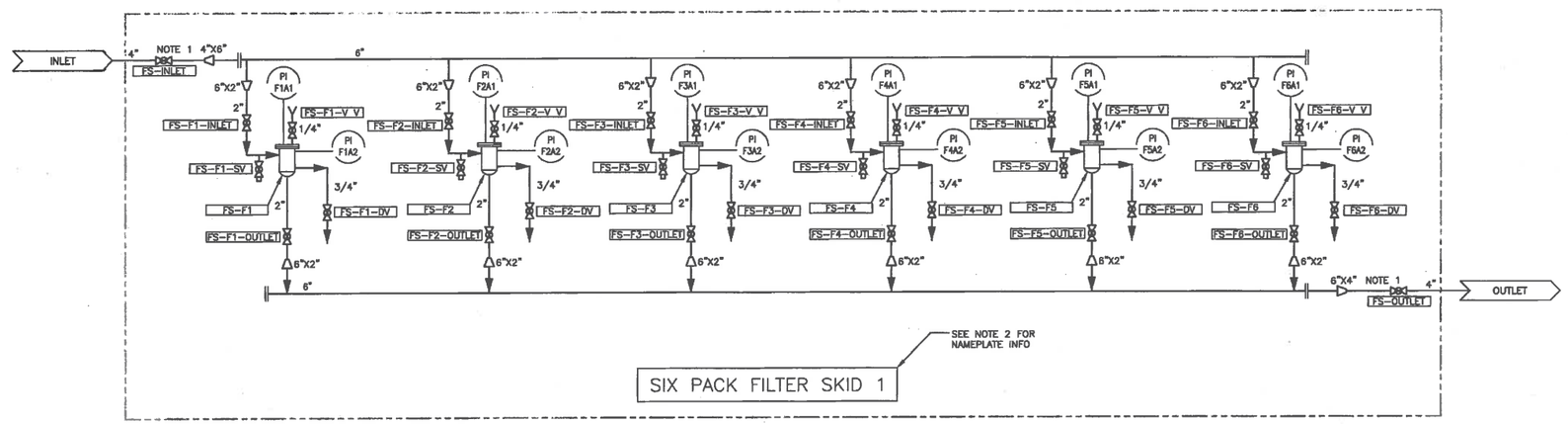

DWG NUMBER	TITLE	REF NUMBER	TITLE
DRAWING TRACEABILITY LIST		REFERENCES	
		NEXT USED ON	

REV. NO.	DESCRIPTION
0	INITIAL RELEASE INTO DMCS PER ECR-15-001005

REVISIONS

SUBJ. NO. 600G

INDEX NO. 8000

CAUTION
NOT COMPLETE WITHOUT CURRENT CHANGE DOCUMENTS FROM DATABASE

ATTENTION
DESTROY THIS DOCUMENT BY SHREDDING MAY CONTAIN SENSITIVE INFORMATION

NAME	DATE	COMPANY
DRAWN BY JP BRAUN	8/4/15	CHPRC
SI SENZ		CHPRC
SUPERVISOR RW WHITLOCK	8/4/15	CHPRC
DESIGN AUTHORITY JG RIDDELLE	8/4/15	CHPRC
DESIGN AUTHORITY RW WHITLOCK	8/4/15	CHPRC

U.S. DEPARTMENT OF ENERGY
Richland Operations Office

P&ID
FILTER SKID
SIX PACK SKID 1

SIZE F | DRAWING NUMBER H-6-16781 | SHEET 1 | REV 0
SCALE NONE

1634

DOE_TEL_F2009 (JAN 2012)

AUG 11 2015
DATE
HANFORD RELEASE
ID: 72
SEQ: 4

FOR INFORMATION ECR-18-001444 PAGE 51

NOTES:

1. INLET/OUTLET MAY BE CONFIGURED WITH 2" OR 4" CAMLOCK AND/OR VALVES AS NEEDED.
2. LABEL TO BE VINYL OR RIGID PLASTIC, UV RATED. TEXT TO BE 1" HIGH MIN. FIELD LOCATE.

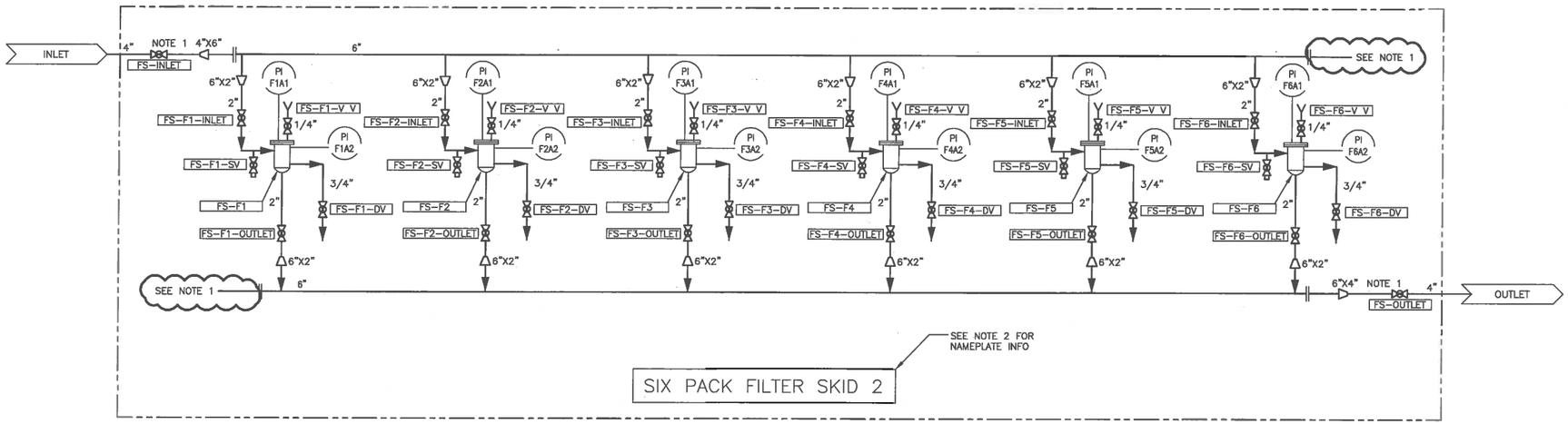

DWG NUMBER	TITLE	REF NUMBER	TITLE
DRAWING TRACEABILITY LIST		REFERENCES	
		NEXT USED ON	

REV NO.	DESCRIPTION
1	INC. ECR-18-001444
0	INITIAL RELEASE INTO DMCS PER ECR-15-001005

REVISIONS

BLDG. NO. 600G

INDEX NO. 8000

CAUTION
NOT COMPLETE WITHOUT CURRENT CHANGE DOCUMENTS FROM DATABASE

ATTENTION
DESTROY THIS DOCUMENT BY SHREDDING MAY CONTAIN SENSITIVE INFORMATION

	NAME	DATE	COMPANY
DRAWN BY	TP BRAUN		
DRAFTING CHECK			CHPRC
SI REVIEW	SL RENE		CHPRC
PROGRAM ENGINEER	RW WHITLOCK		CHPRC
TECHNICAL REVIEW	JG RIDDELLE		CHPRC
DESIGN AUTHORITY	RW WHITLOCK		CHPRC

U.S. DEPARTMENT OF ENERGY
Richland Operations Office

P&ID
FILTER SKID
SIX PACK SKID 2

SIZE F | DRAWING NUMBER H-6-16781 | SHEET 2 | REV 0

SCALE NONE

PLOTID

DOE_TB_F.DWG (JAN 2012)

ECR-18-001444 PAGE 52