0060311

Section 4 8
JUL 28 2003

ENGINEERING DATA TRANSMITTAL

Page 1 of 1

1. EDT 633896

2. To: (Receiving Organization) DST Integrity Project	3. From: (Originating Organization) DST Project & Maintenance Eng.	4. Related EDT No.: N/A
5. Proj./Prog./Dept./Div.: DST Integrity Project	6. Design Authority/Design Agent/Cog. Engr.: Chris E. Jensen	7. Purchase Order No.: N/A
8. Originator Remarks: None		9. Equip./Component No.: 241-AP-101
		10. System/Bldg./Facility: DST
		12. Major Assm. Dwg. No.: N/A
11. Receiver Remarks:	11A. Design Baseline Document? ☐ Yes ☒ No	13. Permit/Permit Application No.: N/A
		14. Required Response Date:

RECEIVED SEP 11 2003 EDMC

15. DATA TRANSMITTED

(A) Item No.	(B) Document/Drawing No.	(C) Sheet No.	(D) Rev. No.	(E) Title or Description of Data Transmitted	(F) Approval Designator	(G) Reason for Transmittal	(H) Originator Disposition	(I) Receiver Disposition
1	RPP-13546	All	0	Ultrasonic Inspection Results for Double-Shell Tank 241-AP-101 - FY 2003	EQ	1	1	

16. KEY

Approval Designator (F)	Reason for Transmittal (G)	Disposition (H) & (I)
E, S, Q, D OR N/A (See WHC-CM-3-5, Sec. 12.7)	1. Approval 2. Release 3. Information 4. Review 5. Post-Review 6. Dist. (Receipt Acknow. Required)	1. Approved 2. Approved w/comment 3. Disapproved w/comment 4. Reviewed no/comment 5. Reviewed w/comment 6. Receipt acknowledged

17. SIGNATURE/DISTRIBUTION (See Approval Designator for required signatures)

(G) Reason	(H) Disp.	(J) Name	(K) Signature	(L) Date	(M) MSIN	(G) Reason	(H) Disp.	(J) Name	(K) Signature	(L) Date	(M) MSIN
		Design Authority N/A									
		Design Agent N/A									
1	1	Cog. Eng. CE Jensen		15 Jul 03	R8-26						
1	1	Cog. Mgr. BH Thacker		7-16-03	S5-10						
1	1	QA WL Adams	WL Adams	7/16/03	S5-07						
		Safety N/A									
1		Env. TL Faust		7-22-03							

18.	19.	20.	21. DOE APPROVAL (if required)
15 Jul 03 Signature of EDT Originator — Date	AP Duncan 22 July 03 Authorized Representative for Receiving Organization — Date	BH Thacker 7-25-03 Design Authority/ Cognizant Manager — Date	Ctrl No. N/A ☐ Approved ☐ Approved w/comments ☐ Disapproved w/comments

BD-7400-172-2 (10/97) BD-7400-172-1

DISTRIBUTION SHEET

To	From	
Distribution	DST Project & Maintenance Eng.	Page 1 of 1
Project Title/Work Order		Date 23 July 2003
Ultrasonic Inspection Results for Double-Shell Tank 241-AP-101 - FY 2003		EDT No. 633896
		ECN No. N/A

Name	MSIN	Text With All Attach.	Text Only	Attach./ Appendix Only	EDT/ECN Only
RP Anantatmula	R1-14	X			
JL Castleberry	R3-26	X			
VL Callahan	H6-60	X			
GP Duncan	R3-26				X
BK Everett	S5-07	X			
TL Faust	S5-03	X			
LJ Julyk	R1-14	X			
PC Miller	R1-51	X			
MJ Ostrom	S5-07				X
TC Oten	S5-07				X
RL Schlosser	R1-14	X			
BH Thacker	S5-10				X
SO-03 Jo Ferguson	SO-03	X			

A-6000-135 (10/97)

ULTRASONIC INSPECTION RESULTS FOR DOUBLE-SHELL TANK 241-AP-101 - FY 2003

Chris E. Jensen
CH2M HILL HANFORD GROUP, INC.
Richland, WA 99352
U.S. Department of Energy Contract DE-AC27-99RL14047

EDT/ECN: EDT 633896 UC:
Cost Center: 7G220 Charge Code: 500445
B&R Code: Total Pages: 226

Key Words: Ultrasonic, inspection, exaination, UT, TSAFT, synthetic aperture, DST

Abstract:
This report documents the required ultrasonic examination of double-shell tank 241-AP-101 performed during FY 2003. This examination included specified primary wall areas, welds, and lower knuckle. Results indicated that there was no reportable wall thinning, cracking, or pitting in any of the plate areas examined.

TRADEMARK DISCLAIMER. Reference herein to any specific commercial product, process, or service by trade name, trademark, manufacturer, or otherwise, does not necessarily constitute or imply its endorsement, recommendation, or favoring by the United States Government or any agency thereof or its contractors or subcontractors.

Printed in the United States of America. To obtain copies of this document, contact: Document Control Services, P.O. Box 950, Mailstop H6-08, Richland WA 99352, Phone (509) 372-2420; Fax (509) 376-4989.

JUL 28 2003
DATE:
HANFORD RELEASE
STA: 4
ID: 8

7/28/03
Release Approval Date Release Stamp

Approved For Public Release

RPP-13546
Revision 0

ULTRASONIC INSPECTION RESULTS FOR DOUBLE-SHELL TANK 241-AP-101 – FY 2003

C.E. Jensen

CH2M HILL Hanford Group, Inc.

Date Published
July 2003

CH2MHILL
Hanford Group, Inc.

Post Office Box 1500
Richland, Washington

Prepared for the U.S. Department of Energy
Office of River Protection

Contract No. DE-AC27-99RL14047, Modification M030

Approved for public release; distribution is unlimited

RPP-13546, Rev. 0

Ultrasonic Inspection Results for Double-Shell Tank 241-AP-101 – FY 2003

July 2003

Prepared by:

A. M. Ermi,
COGEMA Engineering Corporation

Prepared for:

C. E. Jensen
CH2M HILL Hanford Group Inc.

This page intentionally left blank.

CONTENTS

1.0 INTRODUCTION 1-1

2.0 OBJECTIVE AND SCOPE 2-1

3.0 INSPECTION EQUIPMENT DESCRIPTION 3-1

4.0 UT INSPECTION DESCRIPTION 4-1

5.0 INDICATION REPORTING CRITERIA 5-1

6.0 PERFORMANCE DEMONSTRATION TESTS 6-1

7.0 TANK 241-AP-101 HISTORY 7-1

8.0 GENERAL REQUIREMENTS AND INSPECTION SCOPE 8-1

9.0 EQUIPMENT SETUP AT AP TANK FARM 9-1

10.0 INSPECTION RESULTS 10-1

11.0 EVALUATION OF INSPECTION RESULTS 11-1
- 11.1 TANK 241-AP-101 UT DATA EVALUATION 11-1
- 11.2 DST ULTRASONIC INSPECTION DATA RESULTS COMPARISON 11-3

12.0 FINDINGS, CONCLUSIONS, AND RECOMMENDATIONS 12-1

13.0 REFERENCES 13-1

ATTACHMENTS

1. AUTOMATED ULTRASONIC EXAMINATION FOR CORROSION AND CRACKING (Procedure COGEMA-SVUT-INS-007.3, Rev. 1) ..... Att. 1-1

2. ULTRASONIC EXAMINATION OF THE KNUCKLE REGION (Procedure COGEMA-SVUT-INS-007.5, Rev. 0) ..... Att. 2-1

3. COGEMA "AUTOMATED ULTRASONIC THICKNESS DATA REPORT SHEETS" ..... Att. 3-1

4. COGEMA "SAFT/T-SAFT ULTRASONIC DATA REPORT SHEETS" ..... Att. 4-1

5. ULTRASONIC EXAMINATION OF DOUBLE-SHELL TANK 241-AP-101 EXAMINATION COMPLETED MARCH 2003 (PNNL THIRD PARTY REVIEW) ..... Att. 5-1

6. RONDE ULTRASONIC EXAMINATION OF DOUBLE-SHELL TANK 241-AP-101 KNUCKLE REGION EXAMINATION COMPLETED APRIL 2003 (PNNL THIRD PARTY REVIEW) ..... Att 6-1

FIGURES

Figure 1-1. Typical Double-Shell Tank Configuration 1-1

Figure 3-1. P-scan Crawler System on Tank Mock-up 3-1

Figure 3-2. T-SAFT Crawler System on Tank Mock-up 3-2

Figure 4-1. Schematic of UT Setup for Vertical Wall Inspection 4-1

Figure 4-2. Schematic of UT Setup for First Pass of Weld Inspections 4-2

Figure 4-3. Schematic of UT Setup for Second Pass of Weld Inspections 4-3

Figure 4-4. Schematic of UT Setup for Inspection of Cracks at Knuckle 4-3

Figure 4-5. Schematic of UT Setup for Inspection of Wall Thinning at Knuckle 4-4

Figure 4-6. Schematic of UT Setup for Inspection of Wall Thinning at Knuckle via Air Slots 4-4

Figure 4-7. Schematic of SAFT Setup for Detecting Cracks at Knuckle 4-6

Figure 4-8. Schematic of T-SAFT Setup for Sizing Cracks at Knuckle 4-7

Figure 7-1. Waste Level History of Double-Shell Tank 241-AP-101. 7-1

Figure 9-1. Field Set-Up at Riser 031 for Double-Shell Tank 241-AP-101 9-1

Figure 10-1. Schematic of UT Scan Paths on West Side of Tank 241-AP-101 Wall (via Riser 031) 10-2

Figure 10-2. Schematic of UT Scan Paths on Primary Lower Knuckle in Air Slots for Tank 241-AP-101 10-3

Figure 11-1. Scan Data Average Wall Thickness Compared to Nominal Plate Thickness 11-2

TABLES

Table 10-1. Summary of Primary Tank Wall Scan 1 (via Riser 031) 10-4

Table 10-2. Summary of Primary Tank Wall Scan 2 (via Riser 031) 10-5

Table 10-3. Summary of Primary Tank Lower Knuckle Scan Using the P-scan System (via Riser 031) 10-5

Table 10-4. Summary of Primary Tank Vertical Weld Scans (via Riser 031) 10-6

Table 10-5. Summary of Plate #5 / Knuckle Horizontal Weld Scans (via Riser 031) 10-6

Table 10-6. Summary of Primary Tank Lower Knuckle Scan Using the T-SAFT System (via Riser 031) 10-7

Table 10-7. Primary Tank Vertical Wall Scan 1 - Plate 1 (via Riser 031) 10-7

Table 10-8. Primary Tank Vertical Wall Scan 1 - Plate 2 (via Riser 031) 10-8

Table 10-9. Primary Tank Vertical Wall Scan 1 - Plate 3 (via Riser 031) 10-8

Table 10-10. Primary Tank Vertical Wall Scan 1 - Plate 4 (via Riser 031) 10-9

Table 10-11. Primary Tank Vertical Wall Scan 1 - Plate 5 (via Riser 031) 10-9

Table 10-12. Primary Tank Vertical Wall Scan 2 - Plate 1 (via Riser 031) 10-10

Table 10-13. Primary Tank Vertical Wall Scan 2 - Plate 2 (via Riser 031) 10-10

Table 10-14. Primary Tank Vertical Wall Scan 2 - Plate 3 (via Riser 031) 10-11

Table 10-15. Primary Tank Vertical Wall Scan 2 - Plate 4 (via Riser 031) 10-11

Table 10-16. Primary Tank Vertical Wall Scan 2 - Plate 5 (via Riser 031) 10-12

Table 10-17. Primary Tank Lower Knuckle Scan Using the P-scan System (via Riser 031) 10-13

Table 10-18. Primary Tank Lower Knuckle Scan Using the P-scan System in Air Slots (via Riser 031) 10-14

Table 10-19. Primary Tank Lower Knuckle Scan Using the T-SAFT System (via Riser 031) 10-14

Table 10-20. Primary Tank Vertical Wall Weld Scan - Plate 2 (via Riser 031) 10-15

Table 10-21. Primary Tank Vertical Wall Weld Scan - Plate 3 (via Riser 031) 10-15

Table 10-22. Primary Tank Vertical Wall Weld Scan - Plate 4 (via Riser 031) 10-16

Table 10-23. Primary Tank Vertical Wall Weld Scan - Plate 5 (via Riser 031) 10-16

Table 10-24. Primary Tank Horizontal Weld - Plate 5 to Knuckle Scan, Plate Side (via Riser 031) 10-17

Table 10-25. Primary Tank Horizontal Weld - Plate 5 to Knuckle Scan, Knuckle Side (via Riser 031) 10-18

Table 11-1. Double-Shell Tanks Chronological Inspection Results Findings..... 11-3

Table 11-2. Tank Wall Thinning by Nominal Plate Size..... 11-5

TERMS

ASME	American Society of Mechanical Engineers
CH2M HILL	CH2M HILL Hanford Group, Inc.
COGEMA Engineering	COGEMA Engineering Corporation
DST	double-shell tank
DSTIP	Double-Shell Tank Integrity Project
EPRI	Electric Power Research Institute
FY	fiscal year
HAZ	heat-affected zone
JCS	Job Control System
NDE	Nondestructive Examination
PDT	Performance Demonstration Test
PNNL	Pacific Northwest National Laboratory
PUREX	Plutonium Uranium Extraction Facility
RL	U.S. Department of Energy, Richland Operations Office
RMS	Root Mean Square
RONDE	Remotely Operated Nondestructive Examination
SAFT	Synthetic Aperture Focusing Technique
T-SAFT	Tandem Synthetic Aperture Focusing Technique
TWINS	Tank Waste Information Network System
TWRS	Tank Waste Remediation System
UT	Ultrasonic Testing
WDOE	Washington State Department of Ecology

EXECUTIVE SUMMARY

Background

Through FY 1999, six double-shell tanks were ultrasonically examined to meet the integrity requirements of the *Washington Administrative Code*, Chapter 173-303, "Dangerous Waste Regulations". Subsequent to the examinations, integrity assessment reports were issued for each double-shell tank farm and submitted to the Washington State Department of Ecology in FY 1999. In June 2000, the Washington State Department of Ecology issued Administrative Orders 00NWPKW-1250 and 00NWPKW-1251 providing prescriptive examination requirements for all double-shell tanks by FY 2005. This report documents the required ultrasonic examination of double-shell tank 241-AP-101, completed in the third quarter of FY 2003.

Methodology

The primary wall examinations consisted of a vertical 30-inch strip consisting of two 15-inch ultrasonic examination scans. The primary wall vertical examinations were looking for wall thinning, cracking, and pitting in the tank wall. The weld heat affected zones examined included 20 linear feet of vertical welds and 20 linear feet of horizontal welds. A portion of the lower primary tank knuckle was also examined for thinning, pitting and cracking. These examinations were performed primarily using the P-scan nondestructive examination technique. A second technique, Tandem Synthetic Aperture Focusing Technique (T-SAFT), was used to examine the high stress region of the lower knuckle.

The ultrasonic examinations were carried out in accordance with ASME Boiler and Pressure Vessel Code, Section V, "Nondestructive Examinations". The personnel and non-destructive examination equipment were qualified to perform the examinations on the double-shell tanks by performance demonstration tests administered by Pacific Northwest National Laboratories.

The required accuracy for the ultrasonic examinations is to be within 0.020 inches for wall thinning, 0.050 inches for pitting, and 0.10 inches for cracking. The performance demonstration tests revealed that the examiners meet this requirement.

Results

Results indicated that there was no reportable wall thinning in any of the plate areas examined. This included both the primary wall vertical scans and the lower knuckle horizontal scan. In addition, there were no reportable pitting indications nor any crack-like indications detected in any of the plates. This included examination of the lower knuckle for cracks using the T-SAFT system.

There were also no crack-like indications detected in any of the weld heat-affected zones. This included the primary tank vertical weld scans and the knuckle-to-shell horizontal weld scan. In

addition, there were no reportable wall thinning nor reportable pitting indications detected in any of the weld heat-affected zones.

Conclusions

Based on the results of this examination, the material condition of the tank is satisfactory for continued operation.

The tanks inspected to date are summarized in the following table.

Double-Shell Tanks Inspected Through April 2003

Double-Shell Tank	Inspection Year (FY)						
	1997	1998	1999	2000	2001	2002	2003
AN-101						x	
AN-102					x		
AN-105			x			(1)	
AN-106			x				
AN-107		x					
AP-101							x (3)
AP-107				x			
AP-108				x		(2)	
AW-101					x		
AW-102						x	(4)
AW-103	x						
AW-104						x	
AW-105					x		
AW-106						x	
AY-101					x	x	
AY-102			x				
AZ-101			x				

(1) Limited scope reexamination.
(2) Linear indication evaluated.
(3) Includes primary knuckle T-SAFT examination.
(4) Primary knuckle T-SAFT examination only.

1.0 INTRODUCTION

In May 1996 the Tank Waste Remediation System (TWRS) Decision Board recommended, and U.S. Department of Energy, Richland Operations Office (RL) agreed, that the condition of the double-shell tanks (DST) should be determined by ultrasonic testing (UT) inspection of a limited area in six of the 28 DSTs (Figure 1-1). The Washington State Department of Ecology (WDOE) agreed with the strategy of limited ultrasonic inspection of DSTs. Data collected during the UT inspections will be used to assess the condition of the tank, judge the effects of past corrosion control practices, and satisfy a regulatory requirement to periodically assess the integrity of waste tanks.

Figure 1-1. Typical Double-Shell Tank Configuration.

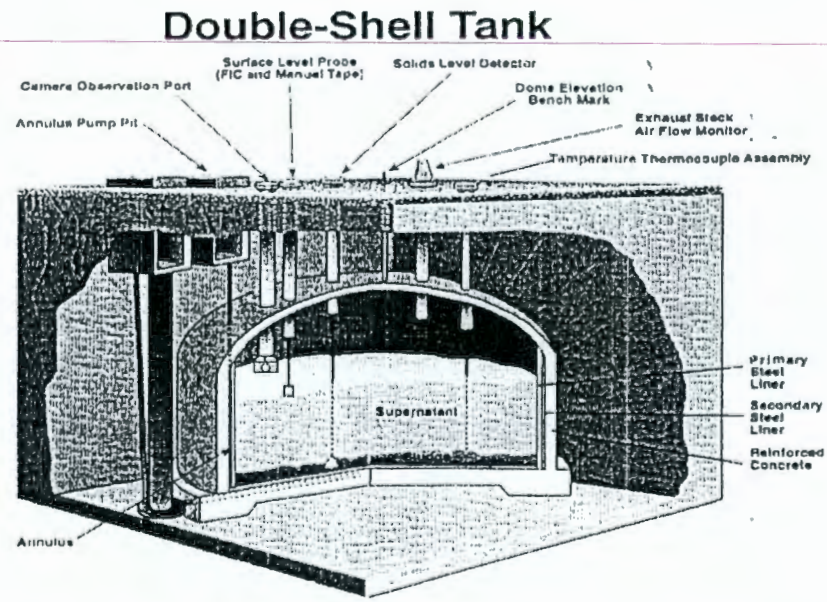

In November 1996, DST 241-AW-103 was the first tank inspected to determine if Hanford DST walls could be inspected without removing the existing surface rust and scale. Equipment similar to that used to perform routine inspections of oil tanks and large pipelines was used. UT sensors were mounted on a remote-controlled crawler that used magnetic wheels to affix itself and move about on the tank walls. The crawler was deployed into the tank annulus and vertically traversed the primary and secondary containment walls to collect data on the wall thickness and the size of any pits or cracks. The successful completion of this inspection met the requirements of RL Milestone T21-97-455 and represented the first UT inspection of a Hanford DST (*Final Report - Ultrasonic Examination of Tank 241-AW-103 Walls*, Leshikar 1997).

In fiscal year (FY) 1998, FY 1999, and FY 2000, similar inspections were performed per Engineering Task Plans HNF-2820 (*Engineering Task Plan for the Ultrasonic Inspection of Hanford Double-Shell Tanks*, Pfluger 1999) and RPP-5583 (*Engineering Task Plan for the Ultrasonic Inspection of Hanford Double-Shell Tanks - FY2000*, Jensen 2000) on 241-AN-107, 241-AN-106, 241-AN-105, 241-AY-102, 241-AZ-101, 241-AP-107, and 241-AP-108. An

attempt was made to examine 241-AY-101 in FY 1999, but corrosion product on the tank wall prevented reliable examination.

In June 2000, WDOE issued an Administrative Order requiring UT examinations of the remaining 20 DSTs through FY 2005 (*Administrative Order No. 00NWPKW-1251, Failure to Comply with Major Milestone M-32 of the Tri-Party Agreement*, Silver 2000). Based on the results of the above listed eight DST inspections and per WDOE Administrative Order requirements (Silver 2000), Engineering Task Plans RPP-6839 (*Engineering Task Plan for the Ultrasonic Inspection of Hanford Double-Shell Tanks - FY2001*, Jensen 2000a), RPP-7869 (*Engineering Task Plan for the Ultrasonic Inspection of Hanford Double-Shell Tanks - FY2002*, Jensen 2002), RPP-8867 (*Engineering Task Plan for the Ultrasonic Inspection of Hanford Double-Shell Tanks 241-AP-108, 241-AY-101, and 241-AZ-102 - FY2002*, Jensen 2002a), and RPP-11832 (*Engineering Task Plan for the Ultrasonic Inspection of Hanford Double-Shell Tanks - FY2003*, Jensen 2002b) were prepared for ultrasonic DST inspections scheduled for FY 2001, FY 2002, and FY 2003.

In FY 2001, UT inspections were performed on four DSTs: 241-AN-102, 241-AW-101, 241-AW-105, and 241-AY-101 (following cleaning of selected areas of the 241-AY-101 wall). In FY 2002, UT inspections were performed on five more DSTs: 241-AN-101, 241-AW-102, 241-AW-104, 241-AW-106 and 241-AY-101 (a more extensive examination of 241-AY-101). The FY 2002 examination of 241-AP-108 was limited to characterization of the linear indication found in FY 2000. In addition, a limited scope reexamination of the upper walls of tank 241-AN-105 was performed in FY 2002. A primary knuckle inspection on 241-AW-102 using the Tandem Synthetic Aperture Focusing Technique (T-SAFT) not completed during FY 2002 was completed in early FY 2003.

DST 241-AP-101 was the first of four tanks selected for inspection in FY 2003 (the others being 241-AP-103, 241-AP-105, and 241-AZ-102). Inspection of tank 241-AP-101 was completed in the third quarter of FY 2003, and is the subject of this report. The services of COGEMA Engineering Corporation (COGEMA Engineering) were retained to provide UT examinations, procedures and inspectors, and report the inspection results. Examination of 241-AP-101 was performed with UT equipment provided by CH2M HILL Hanford Group, Inc. (CH2M HILL).

2.0 OBJECTIVE AND SCOPE

This report describes the inspection system, evaluates the inspection results, and documents findings with conclusions and recommendations. The inspections were conducted in accordance with the criteria and scope set forth in RPP-11832 (Jensen 2002b) for the FY 2003 UT inspection of DST 241-AP-101.

This page intentionally left blank.

3.0 INSPECTION EQUIPMENT DESCRIPTION

Crawler / Scanning Bridge Systems – The crawler is a remotely controlled device that delivers the ultrasonic transducers to the tank walls. The crawler used during P-scan imaging weighs approximately 30 pounds and has dimensions (including its traveling bridge) of approximately 21 inches wide by 18 inches long by 6 inches high. The traveling bridge on the crawler can be outfitted with various ultrasonic transducer configurations (Figure 3-1).

Figure 3-1. P-scan Crawler System on Tank Mock-up.

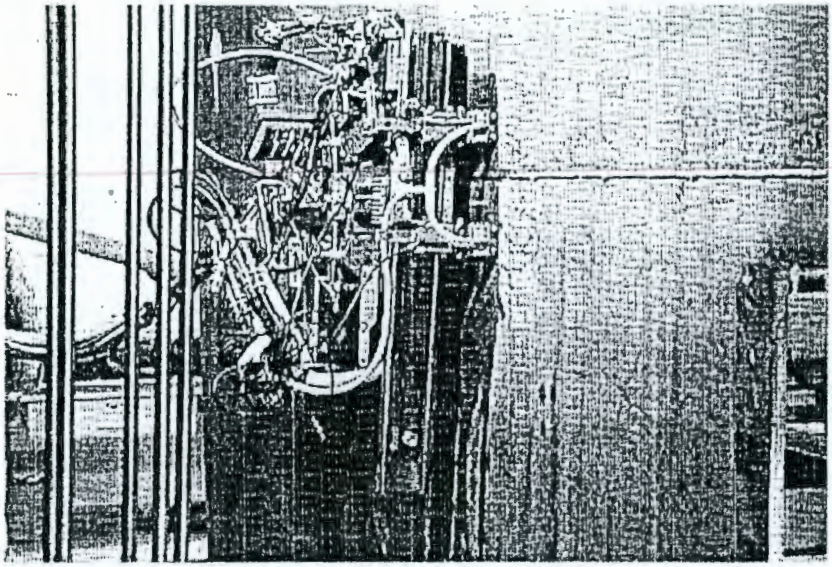

The same type of crawler was used on a remotely operated nondestructive examination (NDE) system which utilizes the Synthetic Aperture Focusing Technique / Tandem Synthetic Aperture Focusing Technique (SAFT/T-SAFT, hereafter referred to as the T-SAFT system) to examine the primary lower knuckle region for cracks. The crawler and its traveling bridge has dimensions of approximately 18.5 inches wide by 47 inches long by 9.5 inches high. The traveling bridge on the crawler is outfitted with two ultrasonic transducers (Figure 3-2).

Both the P-scan and the T-SAFT crawler systems are deployed through a 24 inch annulus inspection riser using customized deployment tools. The crawler attaches to the tank wall with two pairs of magnetic wheels. As the crawler moves slowly forward the transducers glide from side-to-side over the tank wall surface. Water couplant is continuously fed to each transducer at a rate needed to maintain an acceptable signal.

Deployment Tools – A deployment tool was specifically designed to insert and retrieve each scanning system into and out of the DST annular space. The scanner sits on a platform that is manually lowered to the appropriate elevation. The platform has cables attached that can be controlled to move the scanner platform into contact with the examination surface. The scanner is then driven onto the surface. The deployment tool is retracted until the scanner needs to be removed from the annular space.

Figure 3-2. T-SAFT Crawler System on Tank Mock-up.

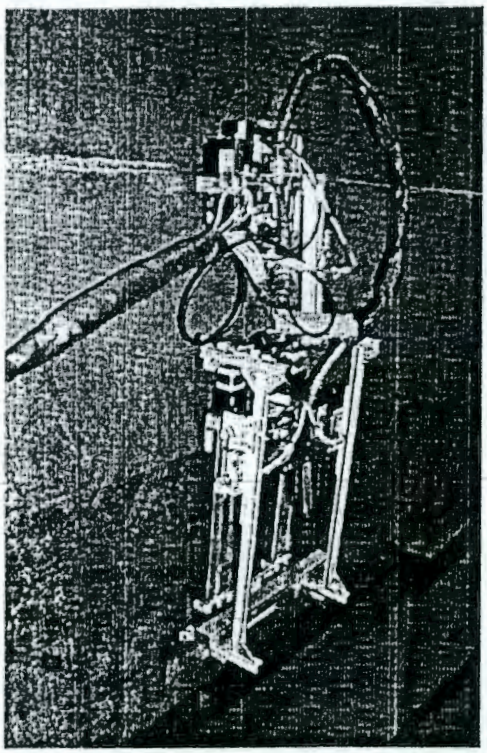

P-scan – P-scan is the name of the computerized pulse-echo ultrasonic inspection system used by the inspection vendor. The P-scan system is manufactured by Force Institute in Denmark. It acquires data from zero and angle beam transducers mounted on the crawler, allows real-time analysis, and records the data in electronic memory for post inspection analysis. Force Institute has designated "P-scan mode" to represent the angle beam (flaw length) view and "T-scan mode" to represent the zero beam (thickness) view. T-scan mode is used for normal operation and, if crack-like indications are detected, then the P-scan mode is employed.

During normal T-scan and P-scan operations, the waveforms of the reflected sound wave signals for each transducer are displayed in the "A-scan monitoring mode". The displays are continuously monitored (but not saved), and are primarily used to verify that the transducers are functioning properly (e.g., there is proper probe contact, adequate water flowing, and correctly operating transducer cables). When an indication is detected, the area is rescanned using the "A-scan recording mode". The recorded A-scan waveforms are then reviewed off-line, serving as an additional tool in the evaluation of the indication.

T-SAFT – The Pacific Northwest National Laboratory (PNNL) developed a system capable of examining the entire knuckle region. This remotely operated NDE system utilizes an advanced signal processing method known as SAFT to introduce sound waves from above the knuckle region where access is readily achieved, and examine the knuckle region below. SAFT is recognized by national standards (ASME Boiler and Pressure Vessel Code, Section XI), and has been used for inservice inspection of commercial nuclear power plant components (*Real-Time 3-D SAFT-UT System Evaluation and Validation*, Doctor et al. 1996). The sound is divergent in

nature and propagates around the knuckle and along the bottom of the waste tank. The SAFT technique provides a detection and location method for cracks in the knuckle region.

PNNL used an advanced nondestructive evaluation method known as Tandem SAFT or T-SAFT, which utilizes two transducers in a pitch-catch mode, and has the ability to size the depth of the detected crack. The T-SAFT process is a technology development mandated by WDOE Administrative Order 00NWPKW-1251, Item 1b. The T-SAFT technique has undergone extensive trials internally at PNNL as well as the Network for Evaluating Structural Components[1] and the Program for the Inspection of Steel Components Phase III trials[2], and has successfully passed the Electric Power Research Institute (EPRI) Planar Flaw Sizing Demonstration on April 7, 1989 at the EPRI NDE center. Because of its ability to size defects using the strongly forward scattered signal without the requirement to detect the extremely weak tip diffracted signal, the T-SAFT technique was a very attractive solution to the inspection of the knuckle region of Hanford's double-shell waste tanks. The T-SAFT application used on the Hanford Site tanks was validated through a performance demonstration test (PDT) that met the intent of ASME Section XI Appendix VIII.

Overview Camera – This camera was deployed to observe the area immediately around the inspection area and to aid crawler deployment in the annulus.

Side-view Camera – This camera and light system were installed in a riser adjacent to the inspection riser to provide an overall view of the inspection process.

Riser Enclosure – A modular structure that is placed over the inspection riser. This structure is used to combat adverse weather conditions and supplies an internal hoist for deployment of equipment.

Data Acquisition Control Center – A pull-type trailer was used to house the crawler controls, video monitors, and data collection and evaluation hardware. The trailer was located inside the AP Tank Farm boundary fence.

---

[1] Network for Evaluating Structural Components, managed by the European Union Joint Research Centre "Institute for Energy" in Petten, the Netherlands.

[2] Program for the Inspection of Steel Components Phase III, a major international program involving 15 countries and some 50 NDT teams from a hundred different institutions around the world, sponsored jointly with the Commission of the European Communities and the International Atomic Energy Agency.

This page intentionally left blank.

4.0 UT INSPECTION DESCRIPTION

The following is the description of the data collection methodology:

Tank inspection was performed under Job Control System (JCS) work package number 2E-02-1487. All work steps, guidelines, procedures, personnel responsibilities, and protocol for the inspection (Jensen 2002b) were included in the subject work package. Two COGEMA Engineering procedures establish the methods, equipment and requirements for the UT measurements and flaw detection. The P-scan imaging system procedure is *Automated Ultrasonic Examination For Corrosion And Cracking*, COGEMA-SVUT-INS-007.3 (Attachment 1), and the T-SAFT system procedure is *Ultrasonic Examination Of The Knuckle Region*, COGEMA-SVUT-INS-007.5 (Attachment 2).

Two remote crawler systems were utilized for the DST 241-AP-101 inspections:

P-scan Crawler for Tank Walls and Knuckle - The remotely controlled, steerable crawler was used to deliver the P-scan UT transducers to the tank wall (Figure 3-1). The crawler was deployed through the 24 inch diameter annulus inspection Riser Number 031 to perform the vertical wall scans, the knuckle wall scans and the vertical and horizontal weld scans.

The P-scan crawler inspects the primary tank wall using one dual-element 0° transducer to detect wall thinning and corrosion pitting, and two 45° shear-wave transducers to detect cracking transverse to the scanning direction. This examination setup is illustrated in the Figure 4-1 schematic.

Figure 4-1. Schematic of UT Setup for Vertical Wall Inspection

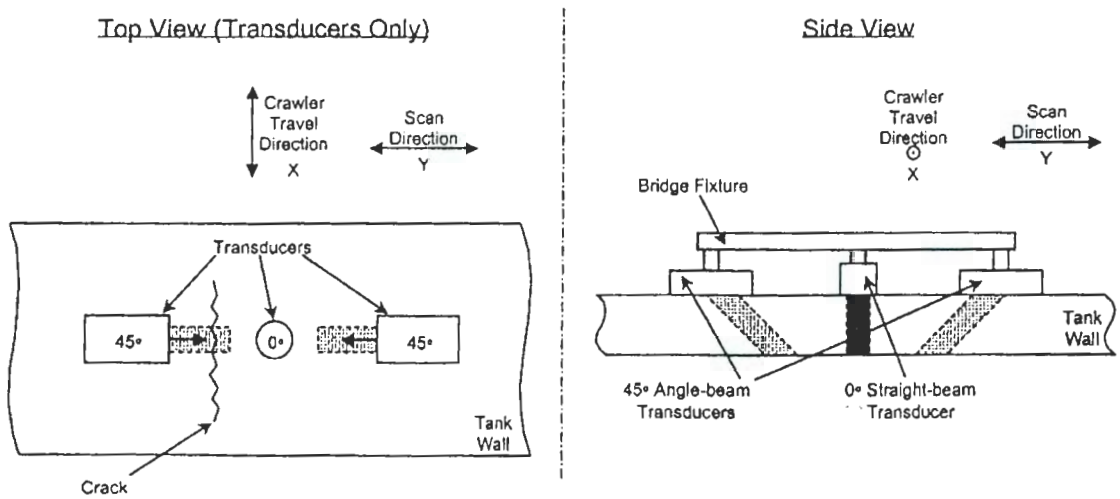

Vertical Wall Inspection Setup – Uses two 45° Transducers and one 0° Transducer (Inspect for Wall Thinning, Pitting and Axial Cracks)

To detect cracks parallel to the weld, a 60° shear-wave transducer was directed toward the weld and a dual-element 0° transducer is also included to detect wall thinning and corrosion pitting (Figure 4-2).

Figure 4-2. Schematic of UT Setup for First Pass of Weld Inspections

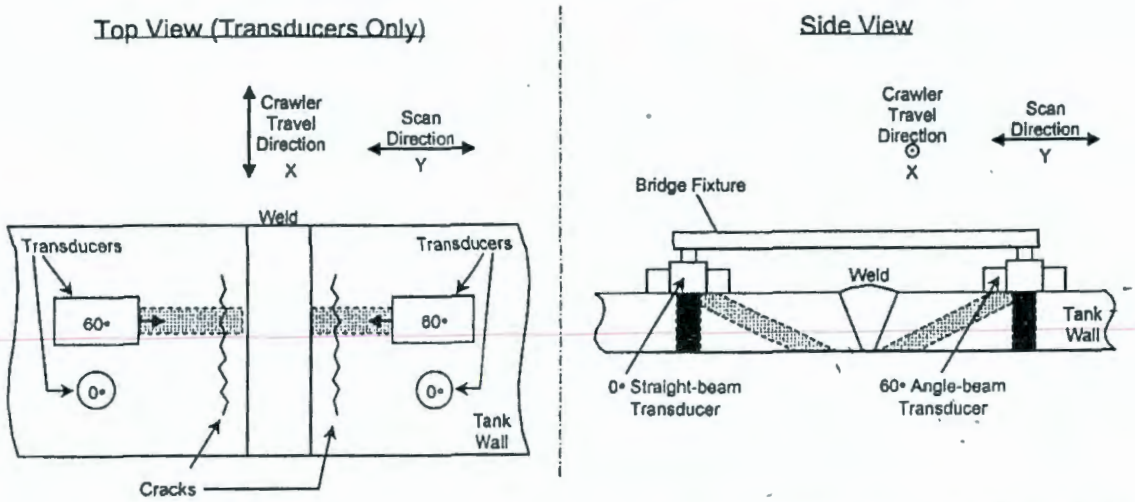

First Pass of Vertical and Horizontal Weld Inspection – Uses two 60° Transducers and two 0° Transducers (Inspect for Wall Thinning, Pitting and HAZ Cracks Parallel to the Weld)

To detect cracks oriented perpendicular to welds, two opposing 45° shear-wave transducers were directed parallel to the weld. Welds were examined from both sides of the weld crown (Figure 4-3). Note that weld and weld examination refer to the UT examination of the heat-affected zone (HAZ).

A special extension arm was attached to the crawler to inspect the primary tank knuckle region. Two 45° shear-wave transducers were attached to the end of the arm to detect cracking transverse to the scanning direction (Figure 4-4). To detect wall thinning and corrosion pitting in the knuckle region, one dual-element 0° transducer was attached to the arm (Figure 4-5).

The setup in Figure 4-5 is used to examine extended, continuous lengths of the primary lower knuckle (typically 20 feet), but interference between the transducer and the insulating concrete pad below the knuckle restricts the examination region to the upper 11 to 12 inches of the knuckle. To inspect lower portions of the knuckle (within a few inches of the tank bottom plate weld), the P-scan transducer can be lined up with air slots in the insulating concrete, permitting approximately 1 inch wide scans in the selected slots (Figure 4-6).

Data and images from the P-scan system were returned to a nearby control center located inside the tank farm fence. The control center contained the crawler controls, video monitors, and data collection and evaluation software and hardware. The UT inspector continuously monitored the signals for reportable indications. The entire inspection was viewed by a camera and lighting system deployed through an adjacent riser.

Figure 4-3. Schematic of UT Setup for Second Pass of Weld Inspections

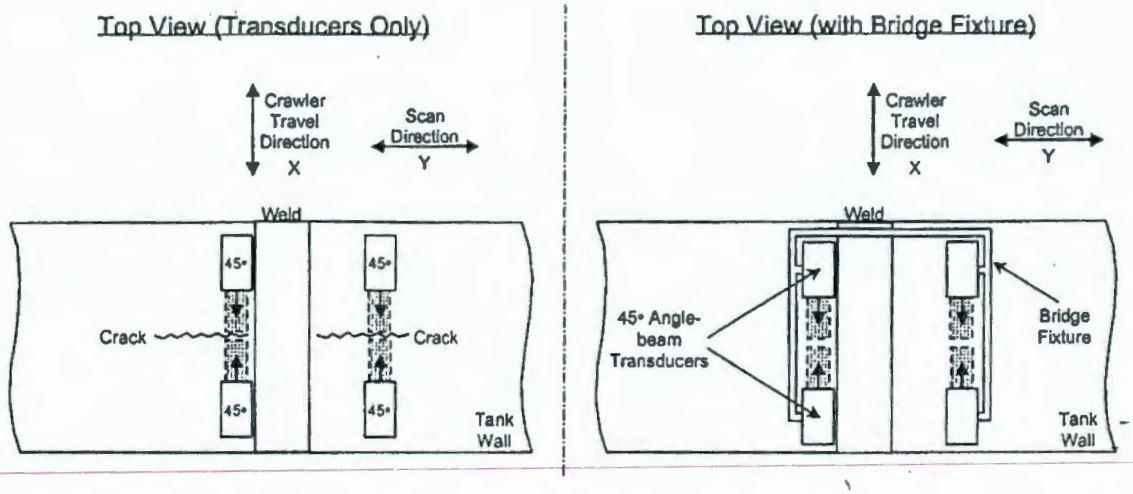

Second Pass of Vertical and Horizontal Weld Inspection – Uses four 45° Transducers (Inspect for Heat-Affected Zone Cracks Perpendicular to the Weld)

Figure 4-4. Schematic of UT Setup for Inspection of Cracks at Knuckle

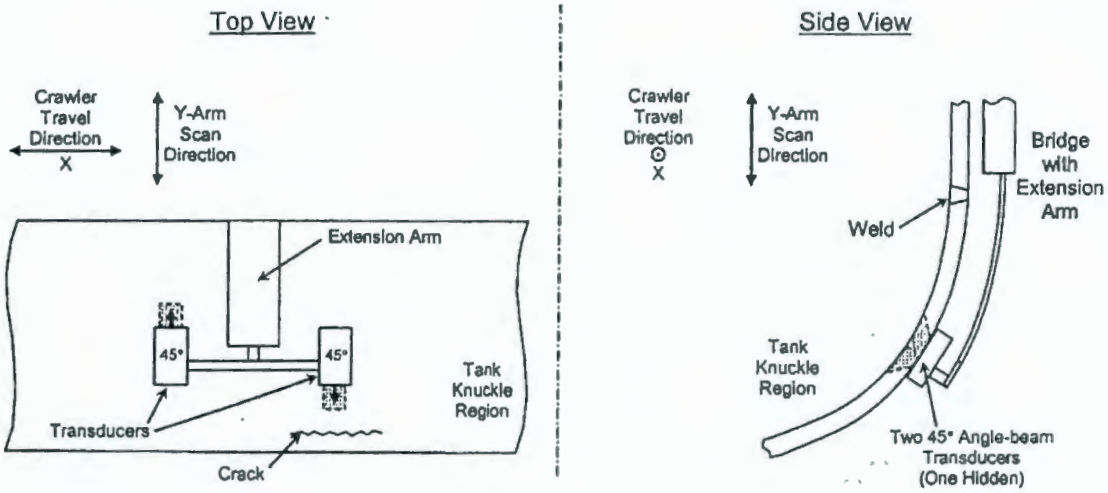

First Pass of Knuckle Inspection Setup – Uses two 45° Transducers (Inspect for Horizontal Knuckle Cracks)

Figure 4-5. Schematic of UT Setup for Inspection of Wall Thinning at Knuckle

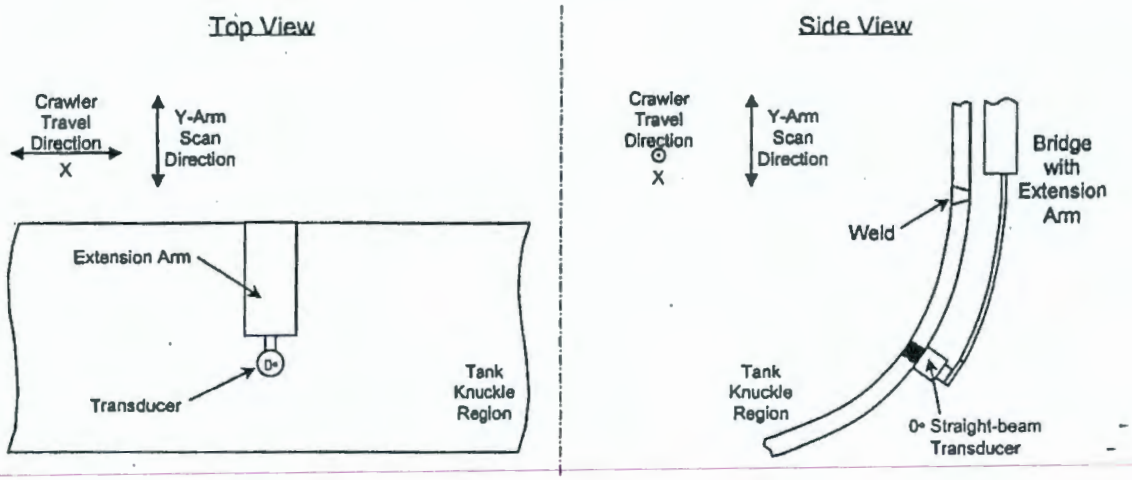

Second Pass of Knuckle Inspection Setup – Uses one 0° Transducer (Inspect for Wall Thinning)

Figure 4-6. Schematic of UT Setup for Inspection of Wall Thinning at Knuckle via Air Slots

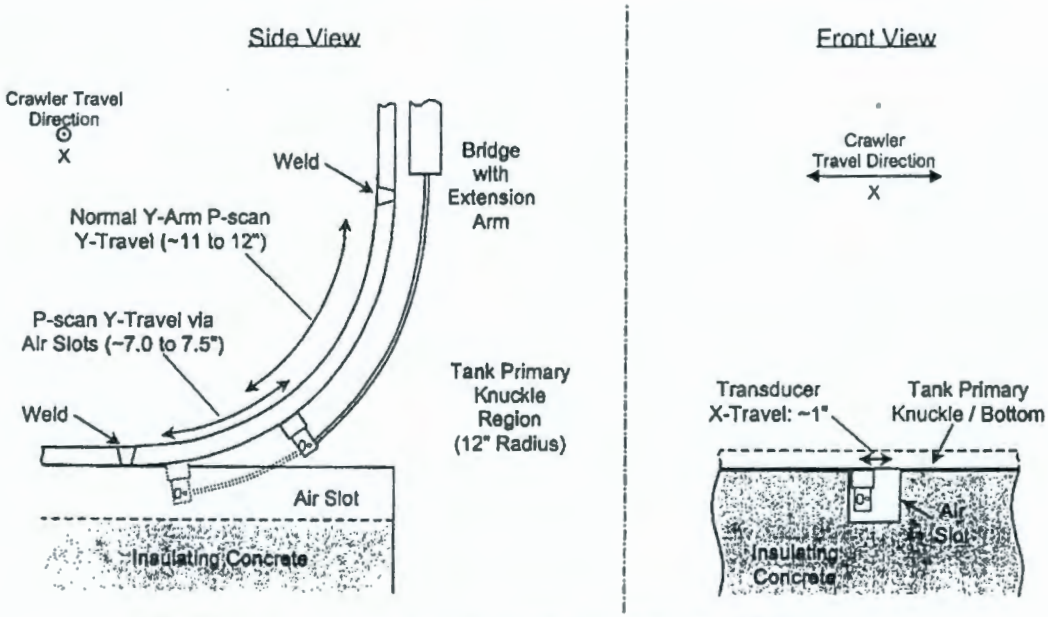

Setup for P-scan Primary Knuckle Inspection via Air Slots – Uses one 0° Transducer (Inspect for Wall Thinning & Pitting)

T-SAFT Crawler for Lower Knuckle - A remotely controlled, steerable crawler was also used to deliver the T-SAFT transducers to the tank wall (Figure 3-2). The crawler was deployed through the same 24 inch diameter annulus inspection Riser Number 031 to perform knuckle wall scans.

The T-SAFT crawler system inspects the primary tank lower knuckle wall using two 70° shear wave transducers in a "pitch-catch" mode. The T-SAFT system has the ability to detect and size (length and depth) circumferentially oriented cracks in the knuckle regions that are located beyond the reach of the P-scan crawler system. However, T-SAFT is not currently capable of identifying pitting or measuring wall thickness.

The two transducers are initially positioned side-by-side and are scanned in the same direction. This SAFT technique provides the method for detecting and locating cracks in the knuckle region. The examination setup is illustrated in Figure 4-7. If cracks are detected, then an advanced evaluation method, T-SAFT, utilizes the two transducers to size the detected crack. The transmit transducer initially starts in front of the receive transducer. Both transducers are scanned equal distances but in opposite directions. This examination setup is illustrated in Figure 4-8.

Some of the electronics to support the T-SAFT system were located near the inspection riser. These include the electronics for driving the scanning bridge mechanisms and electronics for the ultrasonic pulser/receiver for inspection of the tank knuckle. Data and images from the T-SAFT system were returned to the control center located inside the tank farm fence. The control center contained the electronics for driving the crawler, the video monitors, and data acquisition and analysis software and hardware. The inspector continuously monitored the signals for reportable indications. This inspection was also viewed by a camera and lighting system deployed through an adjacent riser.

Figure 4-7. Schematic of SAFT Setup for Detecting Cracks at Knuckle

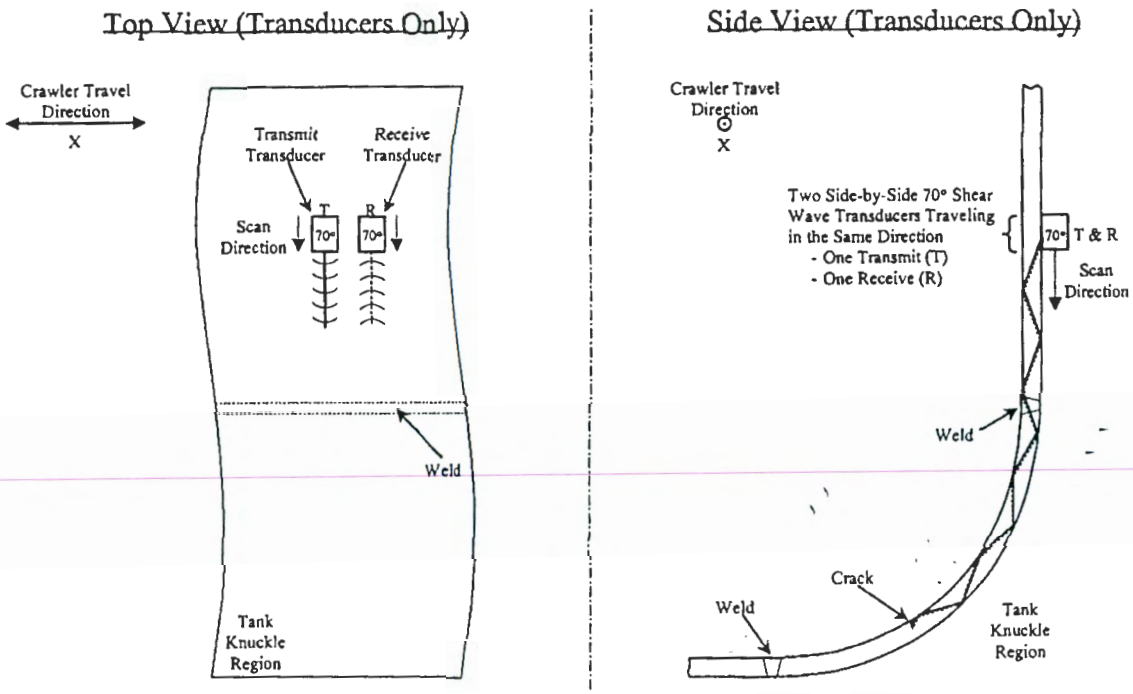

SAFT Knuckle Inspection Setup – Uses two 70° Transducers
(For Detecting Circumferential Cracks)

Figure 4-8. Schematic of T-SAFT Setup for Sizing Cracks at Knuckle

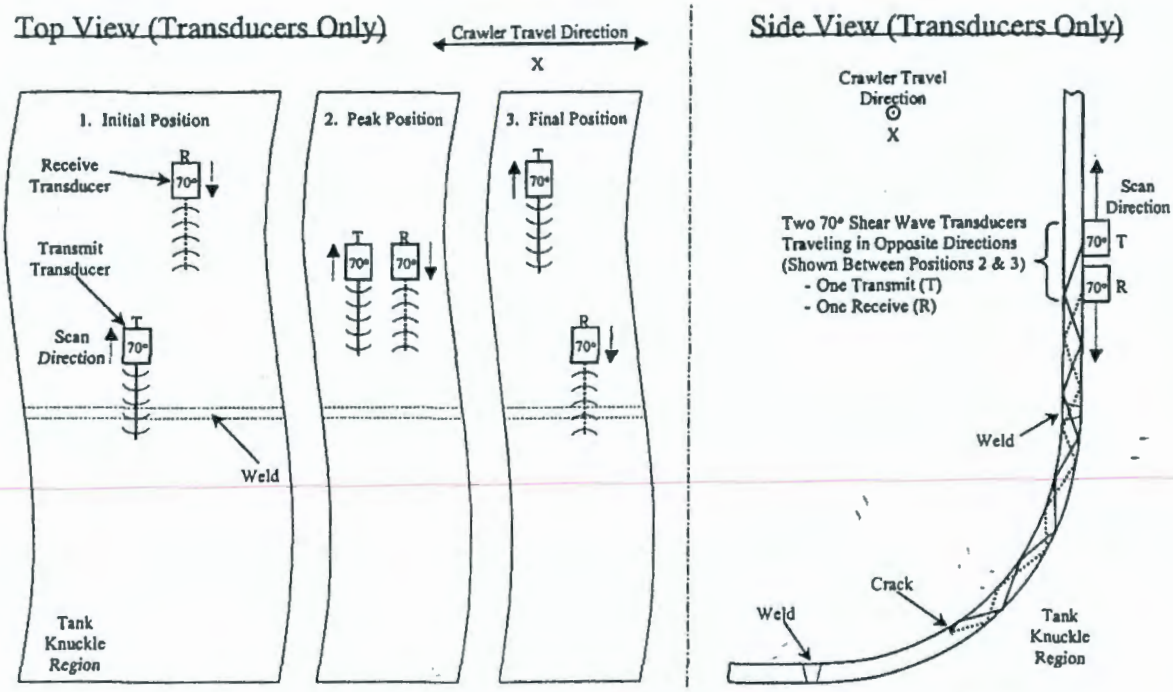

T-SAFT Knuckle Inspection Setup – Uses two 70° Transducers
(For Sizing Circumferential Cracks Detected by SAFT)

This page intentionally left blank.

5.0 INDICATION REPORTING CRITERIA

COGEMA Engineering was required to report to the customer the following anomalies:

- Wall thinning that exceeded 10 percent of the nominal wall thickness
- Pit depths that exceeded 25 percent of the nominal wall thickness
- Cracks that exceeded 0.1 inch in depth

The reporting criteria is established to identify indications that should be tracked. This tracking is to be used to determine if there is any active mechanism causing additional thinning, pit growth, or crack growth, based on subsequent examinations on the eight to ten year examination interval. The values are nominally 50% of the "acceptance criteria" established in *Acceptance Criteria for Non-Destructive Examination of Double-Shell Tanks* (Jensen 1995) and recommended in *Guidelines for Development of Structural Integrity Programs for DOE High-Level Waste Storage Tanks* (Bandyopadhyay et al. 1997).

For indications exceeding the "acceptance criteria", actions are initiated to evaluate the operability of the DST (Jensen 2002) through the occurrence reporting process. Indications exceeding the "reporting criteria" are reported to the CH2M HILL Project Engineer to be documented in the inspection report (Jensen 2002).

This page intentionally left blank.

6.0 PERFORMANCE DEMONSTRATION TESTS

Prior to field use, COGEMA Engineering personnel satisfactorily completed PDTs. The tests were conducted to qualify personnel, test procedures, and ensure the equipment's ability to detect and size wall thinning, pits, and cracks in a series of test plates with artificial defects. The performance demonstration tests were performed on a tank mock-up in the 306E Facility located in the Hanford Site 300 Area. This mock-up also demonstrated the successful deployment and retrieval of the equipment.

The PNNL report, "*Report on Performance Demonstration Test – PDT, May 2000*" (Attachment 3 of *Ultrasonic Inspection Results of Double-Shell Tank 241-AP-108*, Jensen 2000b) provides the details of the complete evaluation of the P-scan system PDT. The PNNL report, "*SAFT/T-SAFT Performance Demonstration Test (PDT), November 14, 2002*" (Attachment 3 of *Ultrasonic Inspection Results of Double-Shell Tank 241-AW-102*, Jensen 2003) provides the details on the qualification of COGEMA Engineering's Level III certified inspector on the T-SAFT system.

This page intentionally left blank.

7.0 TANK 241-AP-101 HISTORY

The 241-AP Tank Farm consists of eight DSTs located in the 200 East Area of the Hanford Site. These underground tanks were built from 1983 through 1986, and are 75 feet in diameter with an operating capacity of 1.16 million gallons.

Tank 241-AP-101 entered service in 1986. It began receiving non-complexed waste and continued to receive this waste until May 1990. From June 1990 until March 1994, the tank waste was designated as dilute non-complexed waste (*Supporting Document for the Southeast Quadrant Historical Tank Content Estimate for AP-Tank Farm*, Brevick et al., 1995). It is currently classified as a double-shell slurry feed (DSSF) tank, designed for storage of double-shell slurry waste produced at the 242-A Evaporator. The tank contains approximately 1,112,000 gallons of supernatant, equivalent to approximately 404 inches of supernatant (*Waste Tank Summary Report for Month Ending February 28, 2003*, Hanlon 2003).

The waste level history since September 1986 is shown in Figure 7-1, based on data obtained from the Tank Waste Information Network System (TWINS)[3].

Figure 7-1. Waste Level History of Double-Shell Tank 241-AP-101.

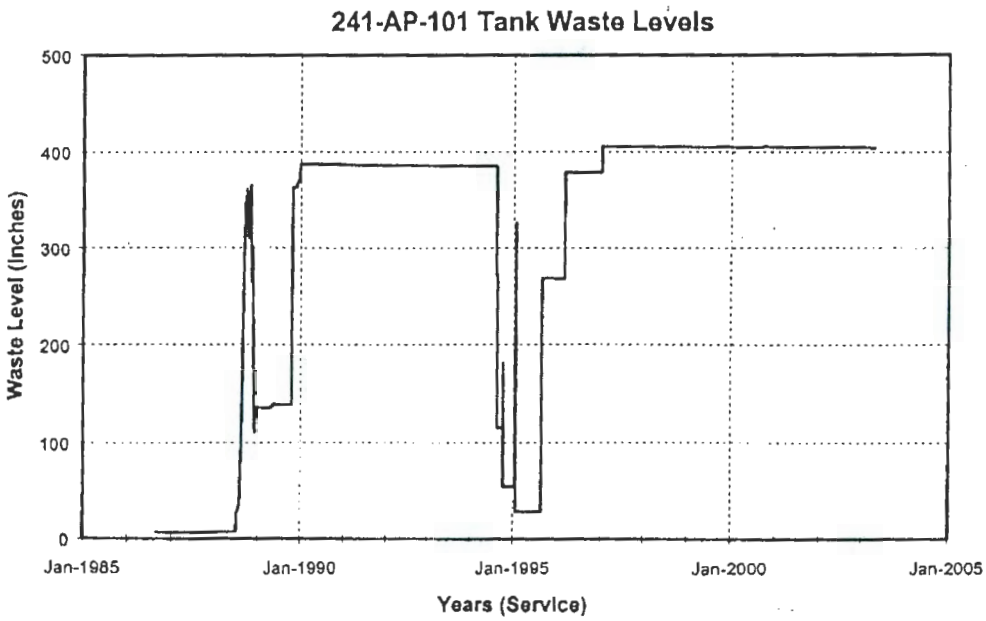

Since July 1988, when the first waste transfer into the tank was made, the minimum recorded waste level was approximately 28 inches (January 26 to August 25, 1995). The maximum

[3] TWINS, http://twins.pnl.gov:8001/twins.htm, queried 04/22/2003 [Data Source: Measurements, SACS, Surface Level, Tank Name AP-101, All Measurement Date values]

recorded waste level was approximately 406 inches, occurring since January 10, 1997, during which the level has remained relatively constant between 404.1 and 406.0 inches, averaging 405.1 inches.

Recorded temperatures of the tank have ranged from a maximum of 74°F (September and October 1995) and 74.6°F (January 2003) to a minimum of 53°F (March and April 1993, and April 1995), based on data obtained from the TWINS[4].

[4] TWINS, http://twins.pnl.gov:8001/twins.htm, queried 04/21/2003 [Data Source: Measurements, SACS, Tank Temperature Readings, Tank Name AP-101, All Measurement Date values]

8.0 GENERAL REQUIREMENTS AND INSPECTION SCOPE

FY 2003 Contract Number 16449 specifies that the contractor provide (among others) the following deliverables to the Double-Shell Tank Integrity Project (DSTIP) organization:

- The contractor shall provide AP-101 NDE Support and Data Analysis
- The contractor shall prepare recommended engineering reports and studies as directed by the DSTIP project leads

The areas on the primary tank that were identified for UT inspection in the engineering task plan (Jensen 2002b) are described below.

Primary Tank Wall and Welds:

- A vertical strip (approximately 30 inches wide by 35 feet long) of the primary wall between the upper haunch transition and the lower knuckle. The vertical strip may be comprised of one or more strips whose total width is 30 inches.
- Twenty feet of the circumferential weld joining the cylinder to the lower knuckle. One vertical weld joining the lowest shell course plates (about 10 feet of weld), and one vertical weld joining the next to the lowest shell course plates (about 10 feet of weld). A minimum of twenty (20) feet of vertical weld shall be examined.

Primary Tank Knuckle:

- A strip in the primary lower knuckle to detect the presence of cracks orientated in the circumferential direction, and for pits and wall thinning. The area to be examined is 20 feet long in the circumferential direction and, in the meridional direction, is from the weld joining the transition plate with the knuckle to the furthest reach of the transducer assembly that is allowed by the tank geometric constraints (using the flexible arm attachment to the existing P-scan system, supplemented by T-SAFT, if available). The 20-foot dimension is not required to be a continuous length.

This page intentionally left blank.

9.0 EQUIPMENT SETUP AT AP TANK FARM

Prior to performing the actual inspection, the riser (number 031, 24 inch) shield plug was removed, and a temporary cover and riser extension were secured to the riser. A portable enclosure was installed over the riser to provide the means for deploying the UT equipment and protecting the operators from the weather. An electric chain hoist, mounted to the roof frame, was used for maneuvering the equipment into position. The control center trailer was set up inside the AP Tank Farm's boundary fence, and the control cables were run along the ground to the equipment located at the riser. The tank farm setup for DST 241-AP-101 is shown in Figure 9-1. Some of the electronics to support the T-SAFT system were also located near the inspection riser.

Figure 9-1. Field Set-Up at Riser 031 for Double-Shell Tank 241-AP-101

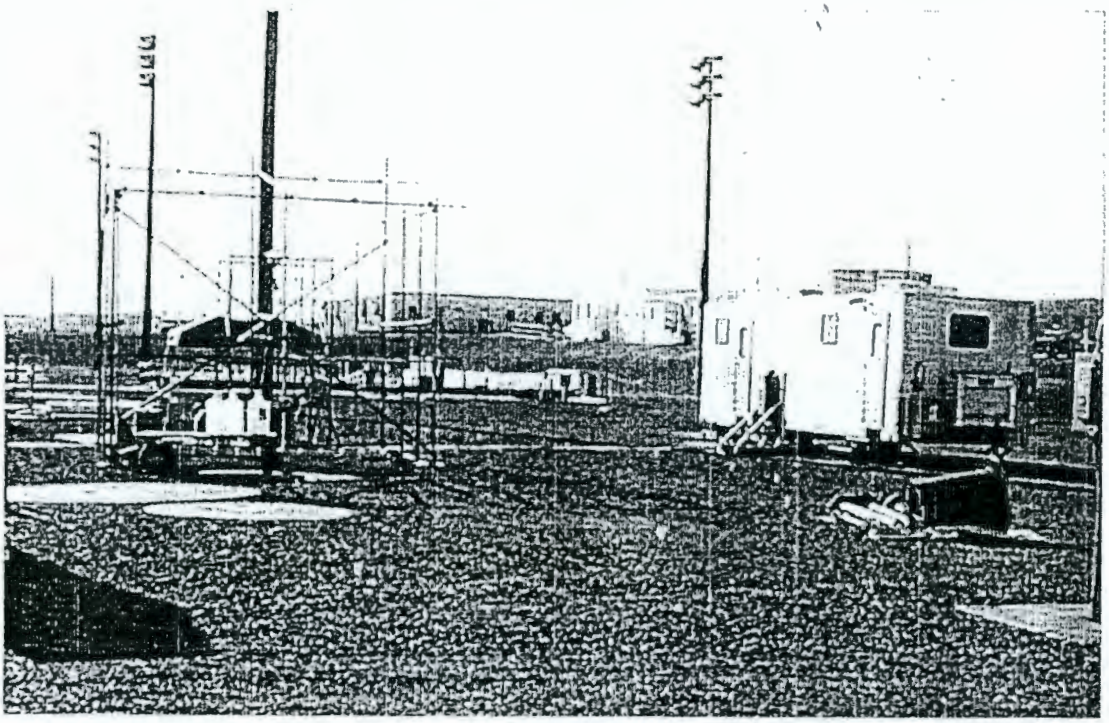

This page intentionally left blank.

10.0 INSPECTION RESULTS

Tank 241-AP-101 was fabricated from carbon steel plate. The primary tank's exterior surface varies from mill scale to coatings of various degrees of rust caused by in-service corrosion of carbon steel. A description of the plates is as follows with the location of the plates as shown in Figure 10-1 (*Tank Cross Section 241-AP Tanks*, Braun-Hanford 1986).

Primary knuckle (top) – Connects dome of tank to side-wall

Primary wall – Consists of (from top to bottom)
Plate #1 – approximately 7 feet 8 inch tall, 1/2 inch nominal thickness
Plate #2 – approximately 7 feet 8 inch tall, 1/2 inch nominal thickness
Plate #3 – approximately 7 feet 8 inch tall, 9/16 inch nominal thickness
Plate #4 – approximately 9 feet tall, 3/4 inch nominal thickness
Plate #5 – approximately 2 feet tall, 7/8 inch nominal thickness

Primary knuckle (bottom) – Approximately 15/16 inch nominal thickness. Connects sidewall of tank to primary tank bottom.

The P-scan crawler was deployed through the 24 inch diameter annulus inspection Riser 031 on the west side of tank 241-AP-101 for examinations of the primary wall, the lower knuckle, and vertical and horizontal welds. All tank welds examined were in the "as-welded" condition. The T-SAFT crawler was also deployed through the 24 inch diameter annulus inspection Riser 031 for examination of the lower knuckle. The various scan paths for the crawlers are shown in Figure 10-1, along with other pertinent tank information. Additional P-scan measurements of the lower knuckle were made using the P-scan crawler equipped with the extension arm lined up with air slots in the insulating concrete. The locations of these scan paths are shown in the Figure 10-2 schematic.

The UT P-scan data and the T-SAFT data were examined by COGEMA Engineering's Level III certified inspector. The P-scan data were also examined by Limited Level II certified inspectors. The Limited Level II inspectors were "P-scan Limited", indicating that they are qualified to collect and examine the P-scan data, but are not qualified to interpret the data.

The following pages contain tables that present summary and detailed wall thickness data, which were derived from the COGEMA "Automated Ultrasonic Thickness Data Report Sheets". The inspection data sheets, the transducer calibration sheets, the original tank wall and weld scan map, and an interpretation of the data by an independent Level III certified NDE Inspector are included in Attachment 3 for the P-scan data.

Also included in the following pages are tables that present summary and detailed scan data derived from the "SAFT/T-SAFT Ultrasonic Data Report Sheets". The inspection data sheet, the transducer calibration sheet and the original tank knuckle scan map are included in Attachment 4 for T-SAFT data.

Figure 10-1. Schematic of UT Scan Paths on West Side of Tank 241-AP-101 Wall (via Riser 031)

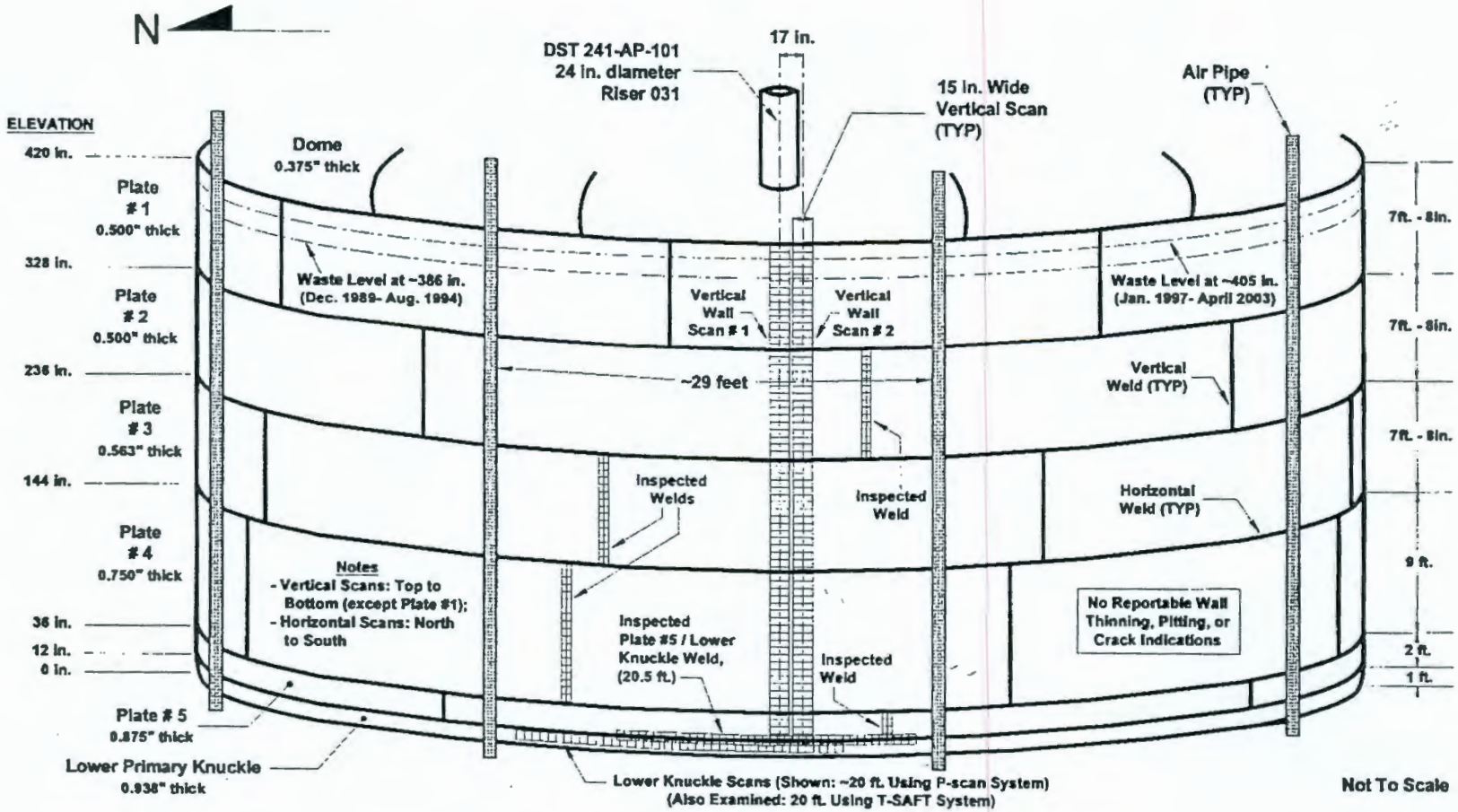

Figure 10-2. Schematic of UT Scan Paths on Primary Lower Knuckle in Air Slots for Tank 241-AP-101

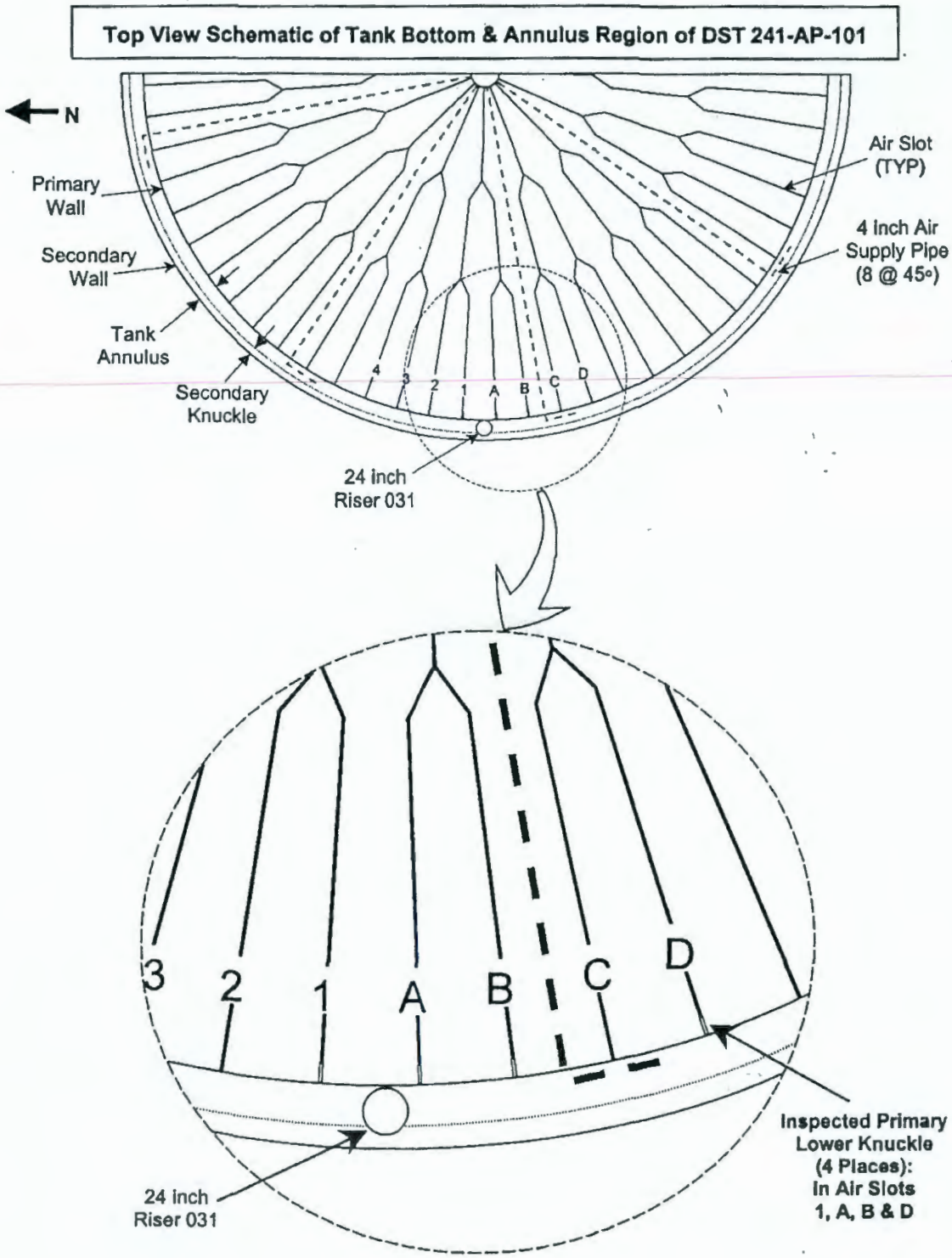

Tables 10-1 through 10-5 show the measured minimum wall thickness values obtained using the P-scan system, and are displayed in a summarized form by wall plates (including the lower knuckle), vertical plate welds, and horizontal knuckle weld. Although the data are reported to three significant figures, the accuracy of the wall thickness data, based on the results of the performance demonstration test, is 0.012 inch root-mean-square (RMS).

Table 10-6 summarizes the results of the probe of the knuckle region for cracks using the T-SAFT system.

Table 10-1. Summary of Primary Tank Wall Scan 1 (via Riser 031)

Plate Description	Elevation of Wall Scan (inches)	Wall Scan Distance (inches) [1]	Design Nominal (inches)	Measured Minimum (inches)	Scan Minimum % of Nominal
Plate #1	329 to 416.9 [2]	87.9	0.500	0.501	100.2%
Plate #2	327 to 237.3	89.7	0.500	0.501	100.2%
Plate #3	235 to 145.3	89.7	0.563	0.539	95.7%
Plate #4	143 to 37.1	105.9	0.750	0.742	98.9%
Plate #5	35 to 14.1	20.9	0.875	0.860	98.3%

[1] All scan widths were 15 inches.

[2] Scan was started at the bottom of Plate #1 and conducted upward due to paper taped on the dome; all remaining "Scan 1" vertical scans conducted from top to bottom.

Table 10-2. Summary of Primary Tank Wall Scan 2 (via Riser 031)

Plate Description	Elevation of Wall Scan (inches)	Wall Scan Distance (inches) [1]	Design Nominal (inches)	Measured Minimum (inches)	Scan Minimum % of Nominal
Plate #1	329 to 415.3 [2]	86.3	0.500	0.492	98.4%
Plate #2	327 to 237.45	89.55	0.500	0.498	99.6%
Plate #3	235 to 146.4	88.6	0.563	0.558	99.1%
Plate #4	143 to 38.4	104.6	0.750	0.741	98.8%
Plate #5	35 to 13.8	21.2	0.875	0.866	99.0%

[1] All scan widths were 15 inches.

[2] Scan was started at the bottom of Plate #1 and conducted upward due to paper taped on the dome; all remaining "Scan 2" vertical scans conducted from top to bottom.

Table 10-3. Summary of Primary Tank Lower Knuckle Scan Using the P-scan System (via Riser 031)

Plate Description	Vertical Location of Knuckle Scan	Knuckle Scan Distance (inches)	Design Nominal (inches)	Measured Minimum (inches)	Scan Minimum % of Nominal
Upper Portion of Lower Knuckle	From 2 inches to 13.5 – 14.4 inches below Plate #5 / Knuckle Weld	Horizontal Distance: 235.3 [1]	0.938	0.866	92.3%
Lower Portion of Lower Knuckle (in 4 Air Slots)	From approx. 10 – 12 inches to approx. 16 – 18 inches below Plate #5 / Knuckle Weld	Total Vertical Distance in 4 Air Slots: 27.6 [2]	0.938	0.944	100.6%

[1] Scan widths were 11.5 – 12.4 inches.

[2] Horizontal x-travels of scans in slots were 0.87 – 1.0 inches.

Table 10-4. Summary of Primary Tank Vertical Weld Scans (via Riser 031)

Weld Description	Elevation of Weld Scan (inches)	Weld Scan Distance (inches) [1]	Design Nominal (inches)	Measured Minimum (inches)	Scan Minimum % of Nominal
Vertical Weld Plate #2	327 to 236.7	90.3	0.500	0.499	99.8%
Vertical Weld Plate #3	235 to 146.1	88.9	0.563	0.562	99.8%
Vertical Weld Plate #4	143 to 36.7	106.3	0.750	0.719	95.9%
Vertical Weld Plate #5	35 to 19.9	15.1	0.875	0.852	97.4%

[1] Scan widths were 9.8 - 11.1 inches.

Table 10-5. Summary of Plate #5 / Knuckle Horizontal Weld Scans (via Riser 031)

Weld Description	Vertical Location of Weld Scan	Weld Scan Distance (inches) [1]	Design Nominal (inches)	Measured Minimum (inches)	Scan Minimum % of Nominal
Horizontal Weld Plate #5 to Knuckle, Plate-side	From ~1 in. to ~5.1 in. above Plate #5 / Knuckle Weld	245.6	0.875	0.854	97.6%
Horizontal Weld Plate #5 to Knuckle, Knuckle-side	From ~1 in. to ~5.1 in. below Plate #5 / Knuckle Weld	245.6	0.938	0.884	94.2%

[1] Scan widths were 10.3 inches.

Table 10-6. Summary of Primary Tank Lower Knuckle Scan Using the T-SAFT System (via Riser 031)

Plate Description	T-SAFT File Numbers	Vertical Location of Horizontal Knuckle Scan	Knuckle Horizontal Scan Distance (inches) [1]	Comments
Lower Knuckle	Files 1 – 24	SAFT / T-SAFT transducers located above the Plate #5 / Knuckle Weld, but entire Lower Knuckle (from weld to weld) probed for cracks	~240	No cracks detected using the SAFT mode

[1] Each T-SAFT file represents a horizontal scan of 12.5 inches, but the crawler is moved only 10 inches after each scan to ensure overlap. Therefore, the total knuckle scan distance for the 25 files would be a few inches above 240 inches.

Tables 10-7 through 10-16 contain the detailed data for wall scans as presented in 12 inch long by 15 inch wide connecting scans. Table 10-17 contains the detailed P-scan data for the lower knuckle scans as presented in 12 inch long by 11.5 to 12.4 inch wide connecting scans. Table 10-18 contains the detailed P-scan data for lower knuckle scans in individual air slots as presented in 5.7 to 7.5 inch long by 0.87 to 1.0 inch wide scans. Table 10-19 contains information on the T-SAFT data scans. The detailed data for vertical and horizontal welds are presented in 12 inch long by 9.8 to 11.1 inch wide scans in Tables 10-20 through 10-25.

Table 10-7. Primary Tank Vertical Wall Scan 1 - Plate 1 (via Riser 031)

Scan I.D. Number (Data Sheets)	Elevation of Start of Wall Scan (inches) [1]	Vertical Location of Wall Scan (inches)	Design Nominal (inches)	Measured Average (inches)	Measured Minimum (inches)
Scan "Vert. Wall / Plate 1" (Page Att. 3-3)	413	84 – 87.9 [2]	0.500	0.520	0.509
	401	72 – 84	0.500	0.520	0.511
	389	60 – 72	0.500	0.520	0.510
	377	48 – 60	0.500	0.518	0.509
	365	36 – 48	0.500	0.516	0.507
	353	24 – 36	0.500	0.515	0.509
	341	12 – 24	0.500	0.512	0.507
	329	0 – 12	0.500	0.510	0.501

[1] Scan was started at the bottom of Plate 1 and conducted upward due to paper taped on the dome.

[2] Scan start was 1 inch above the centerline of the second horizontal weld, and centerline of 24 inch Riser 031; Scan width was 15 inches.

Table 10-8. Primary Tank Vertical Wall Scan 1 - Plate 2 (via Riser 031)

Scan I.D. Number (Data Sheets)	Elevation of Start of Wall Scan (inches)	Vertical Location of Wall Scan (inches)	Design Nominal (inches)	Measured Average (inches)	Measured Minimum (inches)
Scan "Vert. Wall / Plate 2" (Page Att. 3-5)	327	0 – 12 [1]	0.500	0.516	0.508
	315	12 – 24	0.500	0.520	0.512
	303	24 – 36	0.500	0.524	0.515
	291	36 – 48	0.500	0.524	0.515
	279	48 – 60	0.500	0.525	0.504
	267	60 – 72	0.500	0.524	0.514
	255	72 – 84	0.500	0.520	0.510
	243	84 – 89.7	0.500	0.517	0.501

[1] Scan start was 1 inch below the centerline of the second horizontal weld, and centerline of 24 inch Riser 031; Scan width was 15 inches.

Table 10-9. Primary Tank Vertical Wall Scan 1 - Plate 3 (via Riser 031)

Scan I.D. Number (Data Sheets)	Elevation of Start of Wall Scan (inches)	Vertical Location of Wall Scan (inches)	Design Nominal (inches)	Measured Average (inches)	Measured Minimum (inches)
Scan "Vert. Wall / Plate 3" (Page Att. 3-7)	235	0 – 12 [1]	0.563	0.585	0.563
	223	12 – 24	0.563	0.585	0.567
	211	24 – 36	0.563	0.585	0.570
	199	36 – 48	0.563	0.585	0.573
	187	48 – 60	0.563	0.585	0.558
	175	60 – 72	0.563	0.585	0.571
	163	72 – 84	0.563	0.585	0.539
	151	84 – 89.7	0.563	0.580	0.563

[1] Scan start was 1 inch below the centerline of the third horizontal weld, and centerline of 24 inch Riser 031; Scan width was 15 inches.

Table 10-10. Primary Tank Vertical Wall Scan 1 - Plate 4 (via Riser 031)

Scan I.D. Number (Data Sheets)	Elevation of Start of Wall Scan (inches)	Vertical Location of Wall Scan (inches)	Design Nominal (inches)	Measured Average (inches)	Measured Minimum (inches)
Scan "Vert. Wall / / 0 / 1st / Plate 4" (Page Att. 3-9)	143	0 – 12 [1]	0.750	0.759	0.742
	131	12 – 24	0.750	0.762	0.756
	119	24 – 36	0.750	0.762	0.756
	107	36 – 48	0.750	0.762	0.758
	95	48 – 60	0.750	0.761	0.757
	83	60 – 72	0.750	0.761	0.756
	71	72 – 84	0.750	0.760	0.755
	59	84 – 96	0.750	0.759	0.746
	47	96 – 105.9	0.750	0.755	0.746

[1] Scan start was 1 inch below the centerline of the fourth horizontal weld, and centerline of 24 inch Riser 031; Scan width was 15 inches.

Table 10-11. Primary Tank Vertical Wall Scan 1 - Plate 5 (via Riser 031)

Scan I.D. Number (Data Sheets)	Elevation of Start of Wall Scan (inches)	Vertical Location of Wall Scan (inches)	Design Nominal (inches)	Measured Average (inches)	Measured Minimum (inches)
Scan "Vert. Wall / Plate 5" (Page Att. 3-11)	35	0 – 12 [1]	0.875	0.875	0.865
	23	12 – 20.9	0.875	0.875	0.860

[1] Scan start was 1 inch below the centerline of the fifth horizontal weld, and centerline of 24 inch Riser 031; Scan width was 15 inches.

Table 10-12. Primary Tank Vertical Wall Scan 2 - Plate 1 (via Riser 031)

Scan I.D. Number (Data Sheets)	Elevation of Start of Wall Scan (inches) [1]	Vertical Location of Wall Scan (inches)	Design Nominal (inches)	Measured Average (inches)	Measured Minimum (inches)
Scan "Vert. Wall / 2nd / Plate 1" (Page Att. 3-13)	413	84 – 86.3 [2]	0.500	0.515	0.502
	401	72 – 84	0.500	0.520	0.511
	389	60 – 72	0.500	0.520	0.509
	377	48 – 60	0.500	0.520	0.511
	365	36 – 48	0.500	0.520	0.515
	353	24 – 36	0.500	0.520	0.512
	341	12 – 24	0.500	0.515	0.511
	329	0 – 12	0.500	0.515	0.492

[1] Scan was started at the bottom of Plate 1 and conducted upward due to paper taped on the dome.

[2] Scan start was 1 inch above the centerline of the second horizontal weld, and 17 inches south of Scan 1, centerline to centerline; Scan width was 15 inches.

Table 10-13. Primary Tank Vertical Wall Scan 2 - Plate 2 (via Riser 031)

Scan I.D. Number (Data Sheets)	Elevation of Start of Wall Scan (inches)	Vertical Location of Wall Scan (inches)	Design Nominal (inches)	Measured Average (inches)	Measured Minimum (inches)
Scan "Vert. Wall / 2nd / Plate 2" (Page Att. 3-15)	327	0 – 12 [1]	0.500	0.520	0.501
	315	12 – 21.4	0.500	0.520	0.517
Scan "Vert. Wall / 2nd / Plate 2A" (Page Att. 3-17)	305.75	0 – 12 [2]	0.500	0.520	0.511
	293.75	12 – 24	0.500	0.520	0.505
	281.75	24 – 36	0.500	0.520	0.500
	269.75	36 – 48	0.500	0.520	0.517
	257.75	48 – 60	0.500	0.520	0.516
	245.75	60 – 68.3	0.500	0.520	0.498

[1] Scan start was 1 inch below the centerline of the second horizontal weld, and 17 inches south of Scan 1, centerline to centerline; Scan width was 15 inches.

[2] Start of scan @ 21.25 inches of previous scan; Scan width was 15 inches.

Table 10-14. Primary Tank Vertical Wall Scan 2 - Plate 3 (via Riser 031)

Scan I.D. Number (Data Sheets)	Elevation of Start of Wall Scan (inches)	Vertical Location of Wall Scan (inches)	Design Nominal (inches)	Measured Average (inches)	Measured Minimum (inches)
Scan "Vert. Wall / 2nd / Plate 3" (Page Att. 3-19)	235	0 – 12 (1)	0.563	0.585	0.564
	223	12 – 24	0.563	0.585	0.558
	211	24 – 36	0.563	0.585	0.571
	199	36 – 48	0.563	0.590	0.574
	187	48 – 60	0.563	0.590	0.574
	175	60 – 72	0.563	0.590	0.574
	163	72 – 84	0.563	0.590	0.569
	151	84 – 88.6	0.563	0.585	0.559

(1) Scan start was 1 inch below the centerline of the third horizontal weld, and 17 inches south of Scan 1, centerline to centerline; Scan width was 15 inches.

Table 10-15. Primary Tank Vertical Wall Scan 2 - Plate 4 (via Riser 031)

Scan I.D. Number (Data Sheets)	Elevation of Start of Wall Scan (inches)	Vertical Location of Wall Scan (inches)	Design Nominal (inches)	Measured Average (inches)	Measured Minimum (inches)
Scan "Vert. Wall / 2nd / Plate 4" (Page Att. 3-21)	143	0 – 12 (1)	0.750	0.760	0.745
	131	12 – 24	0.750	0.760	0.754
	119	24 – 36	0.750	0.765	0.755
	107	36 – 48	0.750	0.765	0.751
	95	48 – 60	0.750	0.765	0.759
	83	60 – 72	0.750	0.765	0.757
	71	72 – 84	0.750	0.765	0.750
	59	84 – 96	0.750	0.762	0.741
	47	96 – 104.6	0.750	0.760	0.748

(1) Scan start was 1 inch below the centerline of the fourth horizontal weld, and 17 inches south of Scan 1, centerline to centerline; Scan width was 15 inches.

Table 10-16. Primary Tank Vertical Wall Scan 2 - Plate 5 (via Riser 031)

Scan I.D. Number (Data Sheets)	Elevation of Start of Wall Scan (inches)	Vertical Location of Wall Scan (inches)	Design Nominal (inches)	Measured Average (inches)	Measured Minimum (inches)
Scan "Vert. Wall / 2nd / Plate 5" (Page Att. 3-23)	35	0 – 12 [1]	0.875	0.876	0.871
	23	12 – 21.2	0.875	0.875	0.866

[1] Scan start was 1 inch below the centerline of the fifth horizontal weld, and 17 inches south of Scan 1, centerline to centerline; Scan width was 15 inches.

Table 10-17. Primary Tank Lower Knuckle Scan Using the P-scan System (via Riser 031)

Scan I.D. Number (Data Sheets)	Vertical Location of Horizontal Knuckle Scan	Horizontal Location of Knuckle Scan (inches)	Design Nominal (inches)	Measured Average (inches)	Measured Minimum (inches)
Scan "Y-Arm / Knuckle" (Page Att. 3-25)	From 2 in. to 14.4 in. below Plate #5 / Knuckle Weld	0 – 12 [1]	0.938	0.937	0.889
		12 – 24	0.938	0.935	0.909
		24 – 36	0.938	0.935	0.912
		36 – 48	0.938	0.935	0.906
		48 – 60	0.938	0.934	0.891
		60 – 72	0.938	0.935	0.871
		72 – 84	0.938	0.935	0.875
		84 – 96	0.938	0.939	0.891
		96 – 104.7	0.938	0.938	0.905
Scan "Y-Arm / Knuckle A" (Page Att. 3-27)	From 2 in. to 13.5 in. below Plate #5 / Knuckle Weld	0 – 12 [2]	0.938	0.945	0.895
		12 – 24	0.938	0.945	0.897
		24 – 36	0.938	0.940	0.908
		36 – 48	0.938	0.936	0.897
		48 – 60	0.938	0.932	0.898
		60 – 72	0.938	0.935	0.890
		72 – 84	0.938	0.932	0.866
		84 – 96	0.938	0.930	0.880
		96 – 108	0.938	0.930	0.871
		108 – 114.5	0.938	0.930	0.877
Scan "Y-Arm / Knuckle B" (Page Att. 3-29)	From 2 in. to 14.2 in. below Plate #5 / Knuckle Weld	0 – 12 [3]	0.938	0.950	0.906
		12 – 16.1	0.938	0.955	0.916

[1] Start of scan @ next to the air tube north of 24 inch riser; Scan width was 12.4 inches.

[2] Start of scan @ south side of vertical weld, north of 24 inch riser; Scan width was 11.5 inches.

[3] Start of scan @ south side of second vertical weld, south of 24 inch riser; Scan width was 12.2 inches.

Table 10-18. Primary Tank Lower Knuckle Scan Using the P-scan System in Air Slots (via Riser 031)

Scan I.D. Number (Data Sheets)	Vertical Location of Knuckle Scan in Slot	Vertical Y-Travel of Knuckle Scan in Slot (inches)	Design Nominal (inches)	Measured Average (inches)	Measured Minimum (inches)
Scan "Y-Arm / Slot 1" (Page Att. 3-31)	Exact starting positions not determined, but approximately 10 to 12 inches below the Plate #5 / Knuckle Weld; Scans overlap areas examined in continuous scans (see Table 10-17)	7.5 (1)	0.938	0.950	0.945
Scan "Y-Arm / Slot A" (Page Att. 3-32)		5.7 (2)	0.938	0.960	0.954
Scan "Y-Arm / Slot B" (Page Att. 3-33)		7.3 (3)	0.938	0.957	0.944
Scan "Y-Arm / Slot D" (Page Att. 3-34)		7.1 (4)	0.938	0.968	0.955

(1) Horizontal x-travel of scan in slot was 0.87 inches.
(2) Horizontal x-travel of scan in slot was 1.0 inches.
(3) Horizontal x-travel of scan in slot was 0.9 inches.
(4) Horizontal x-travel of scan in slot was 1.0 inches.

Table 10-19. Primary Tank Lower Knuckle Scan Using the T-SAFT System (via Riser 031)

T-SAFT File Number (Data Sheets)	Vertical Location of Horizontal Knuckle Scan	Horizontal Distance of T-SAFT Knuckle Scan (inches) (1)	Comments
Files 1 through 24 (Page Att. 4-3)	SAFT / T-SAFT transducers located above the Plate #5 / Knuckle Weld, but entire Lower Knuckle (from weld to weld) probed for cracks	0 to ~240 (2)	No cracks detected using the SAFT mode

(1) Each T-SAFT file represents a horizontal scan of 12.5 inches, but the crawler is moved only 10 inches after each scan to ensure overlap.
(2) Start of scan @ vertical weld on knuckle north of 24 inch riser.

Table 10-20. Primary Tank Vertical Wall Weld Scan - Plate 2 (via Riser 031)

Scan I.D. Number (Data Sheets)	Elevation of Start of Weld Scan (inches)	Vertical Location of Weld Scan (inches)	Design Nominal (inches)	Measured Average (inches)	Measured Minimum (inches)
Scan "Vert. Weld / 0 / 60 / Plate 2" (Page Att. 3-35)	327	0 – 12 [1]	0.500	0.512	0.499
	315	12 – 24	0.500	0.515	0.506
	303	24 – 36	0.500	0.515	0.509
	291	36 – 48	0.500	0.515	0.510
	279	48 – 60	0.500	0.518	0.504
	267	60 – 72	0.500	0.517	0.500
	255	72 – 84	0.500	0.515	0.506
	243	84 – 90.3	0.500	0.515	0.501

[1] Scan start was 1 inch below the centerline of the second horizontal weld; Scan width was 9.8 inches.

Table 10-21. Primary Tank Vertical Wall Weld Scan - Plate 3 (via Riser 031)

Scan I.D. Number (Data Sheets)	Elevation of Start of Weld Scan (inches)	Vertical Location of Weld Scan (inches)	Design Nominal (inches)	Measured Average (inches)	Measured Minimum (inches)
Scan "Vert. Weld / Plate 3" (Page Att. 3-37)	235	0 – 12 [1]	0.563	0.580	0.562
	223	12 – 24	0.563	0.583	0.562
	211	24 – 36	0.563	0.584	0.568
	199	36 – 48	0.563	0.585	0.570
	187	48 – 60	0.563	0.585	0.565
	175	60 – 72	0.563	0.590	0.570
	163	72 – 84	0.563	0.585	0.563
	151	84 – 88.9	0.563	0.580	0.564

[1] Scan start was 1 inch below the centerline of the third horizontal weld; Scan width was 11.1 inches.

Table 10-22. Primary Tank Vertical Wall Weld Scan - Plate 4 (via Riser 031)

Scan I.D. Number (Data Sheets)	Elevation of Start of Weld Scan (inches)	Vertical Location of Weld Scan (inches)	Design Nominal (inches)	Measured Average (inches)	Measured Minimum (inches)
Scan "Vert. Weld / Plate 4" (Page Att. 3-39)	143	0 – 12 [1]	0.750	0.755	0.719
	131	12 – 24	0.750	0.755	0.725
	119	24 – 28	0.750	0.755	0.740
Scan "Vert. Weld / Plate 4A" (Page Att. 3-39)	115.1	0 – 12 [2]	0.750	0.755	0.741
	103.1	12 – 24	0.750	0.755	0.736
	91.1	24 – 36	0.750	0.755	0.741
	79.1	36 – 48	0.750	0.755	0.730
	67.1	48 – 60	0.750	0.755	0.739
	55.1	60 – 72	0.750	0.750	0.727
	43.1	72 – 78.4	0.750	0.745	0.736

[1] Scan start was 1 inch below the centerline of the fourth horizontal weld; Scan width was 11.0 inches.
[2] Start of scan @ 27.9 inches of previous scan; Scan width was 11.0 inches.

Table 10-23. Primary Tank Vertical Wall Weld Scan - Plate 5 (via Riser 031)

Scan I.D. Number (Data Sheets)	Elevation of Start of Weld Scan (inches)	Vertical Location of Weld Scan (inches)	Design Nominal (inches)	Measured Average (inches)	Measured Minimum (inches)
Scan "Vert. Weld / Plate 5" (Page Att. 3-41)	35	0 – 12 [1]	0.875	0.875	0.855
	23	12 – 15.1	0.875	0.872	0.852

[1] Scan start was 1 inch below the centerline of the fifth horizontal weld; Scan width was 10.9 inches.

Table 10-24. Primary Tank Horizontal Weld - Plate 5 to Knuckle Scan, Plate Side (via Riser 031)

Scan I.D. Number (Data Sheets)	Vertical Location of Horizontal Weld Scan	Horizontal Location of Weld Scan, Plate Side (inches)	Design Nominal (inches)	Measured Average (Inches)	Measured Minimum (inches)
Scan "Horz. Weld Plate / Knuckle" (Page Att. 3-47)	From ~1 in. to ~5.1 in. above Plate #5 / Knuckle Weld	0 – 12 (1)	0.875	0.875	0.860
		12 – 24	0.875	0.876	0.872
		24 – 36	0.875	0.876	0.868
		36 – 48	0.875	0.876	0.867
		48 – 60	0.875	0.877	0.869
		60 – 65.4	0.875	0.877	0.867
Scan "Horz. Weld Plate / Knuckle A" (Page Att. 3-48)	From ~1 in. to ~5.1 in. above Plate #5 / Knuckle Weld	0 – 12 (2)	0.875	0.875	0.865
		12 – 24	0.875	0.878	0.869
		24 – 36	0.875	0.878	0.858
		36 – 48	0.875	0.878	0.874
		48 – 60	0.875	0.877	0.870
		60 – 72	0.875	0.876	0.866
		72 – 84	0.875	0.875	0.866
		84 – 96	0.875	0.876	0.866
		96 – 108	0.875	0.876	0.871
		108 – 120	0.875	0.876	0.861
Scan "Horz. Weld Plate / Knuckle B" (Page Att. 3-50)	From ~1 in. to ~5.1 in. above Plate #5 / Knuckle Weld	0 – 12 (3)	0.875	0.878	0.875
		12 – 24	0.875	0.878	0.873
		24 – 36	0.875	0.880	0.867
		36 – 48	0.875	0.881	0.875
		48 – 60	0.875	0.880	0.854
		60 – 61.9	0.875	0.882	0.875

(1) Start of scan @ 3rd air slot south of north air line; Scan width was 10.3 inches.

(2) Start of scan @ 63.7 inches of previous scan; Scan width was 10.3 inches.

(3) Start of scan @ end of previous scan; Scan width was 10.3 inches.

Table 10-25. Primary Tank Horizontal Weld - Plate 5 to Knuckle Scan, Knuckle Side (via Riser 031)

Scan I.D. Number (Data Sheets)	Vertical Location of Horizontal Weld Scan	Horizontal Location of Weld Scan, Plate Side (inches)	Design Nominal (inches)	Measured Average (inches)	Measured Minimum (inches)
Scan "Horz. Weld Plate / Knuckle" (Page Att. 3-47)	From ~1 in. to ~5.1 in. below Plate #5 / Knuckle Weld	0 – 12 (1)	0.938	0.935	0.913
		12 – 24	0.938	0.930	0.896
		24 – 36	0.938	0.925	0.910
		36 – 48	0.938	0.923	0.898
		48 – 60	0.938	0.920	0.884
		60 – 65.4	0.938	0.920	0.907
Scan "Horz. Weld Plate / Knuckle A" (Page Att. 3-49)	From ~1 in. to ~5.1 in. below Plate #5 / Knuckle Weld	0 – 12 (2)	0.938	0.920	0.905
		12 – 24	0.938	0.915	0.897
		24 – 36	0.938	0.915	0.889
		36 – 48	0.938	0.917	0.906
		48 – 60	0.938	0.920	0.898
		60 – 72	0.938	0.948	0.939
		72 – 84	0.938	0.947	0.920
		84 – 96	0.938	0.947	0.924
		96 – 108	0.938	0.948	0.935
		108 – 120	0.938	0.949	0.922
Scan "Horz. Weld Plate / Knuckle B" (Page Att. 3-50)	From ~1 in. to ~5.1 in. below Plate #5 / Knuckle Weld	0 – 12 (3)	0.938	0.948	0.929
		12 – 24	0.938	0.946	0.936
		24 – 36	0.938	0.947	0.908
		36 – 48	0.938	0.945	0.922
		48 – 60	0.938	0.964	0.926
		60 – 61.9	0.938	0.963	0.955

(1) Start of scan @ 3rd air slot south of north air line; Scan width was 10.3 inches.

(2) Start of scan @ 63.7 inches of previous scan; Scan width was 10.3 inches.

(3) Start of scan @ end of previous scan; Scan width was 10.3 inches.

11.0 EVALUATION OF INSPECTION RESULTS

The results from the inspection of tank 241-AP-101 are evaluated and compared with results of all other tank ultrasonic inspections.

11.1 TANK 241-AP-101 UT DATA EVALUATION

The UT P-scan data and T-SAFT data were interpreted by W. H. Nelson, COGEMA Engineering's Level III certified inspector. The P-scan data were also examined by J. B. Elder, an independent Level III certified NDE Inspector. Mr. Elder independently evaluated the P-scan raw data and concurred with COGEMA Engineering's interpretation (Attachment 3). The P-scan and T-SAFT data have also been evaluated by PNNL as a third party review. Their results and conclusions were found to be consistent with those described in this report. Their P-scan data review is *Ultrasonic Examination Of Double-Shell Tank 241-AP-101 - Examination Completed March 2003*, PNNL report number PNNL-14278, Rev. 0 (Attachment 5), and their T-SAFT data review is *RONDE Ultrasonic Examination of Double-Shell Tank 241-AP-101 Knuckle Region - Examination Completed April 2003*, PNNL report number PNNL-14288, Rev. 0 (Attachment 6).

The results of the tank 241-AP-101 UT inspections (both P-scan and T-SAFT) indicated no reportable wall thinning, no pit-like indications, and no cracking. Figure 11-1 shows the "as-found" measurements of the primary tank vertical wall scans generated from the P-scan Inspection Data Sheets (Attachment 3).

Each wall thickness measurement plotted on Figure 11-1 is the average of all data collected over a 12 inch long by 15 inch wide scan area. Areas of interest for tank 241-AP-101 are the vapor space above the current liquid waste, the current liquid-vapor interface, the liquid region, and any additional historical liquid-vapor interface regions. Since January 1997, the liquid waste level has been at approximately 405 inches (33.7 feet); and during the period from December 1989 to August 1994, the level remained relatively constant at approximately 386 inches (32.2 feet). There is no evidence of any significant general thinning in any of these regions.

The UT data show that the primary tank average wall thickness values exceed the nominal values specified in the design documents. The UT data, when compared to construction specifications, drawings, standards, and codes (*241-AP Double-Shell Tanks Integrity Assessment Report*, Jensen 1999), reveal that the as-found condition of the tank plates and welds are all within the allowable design limits. A summary of the results associated with the areas examined is presented below.

Primary Tank Wall: Two vertical strips encompassing Plates #1 through #5 were examined. The overall average wall thickness for each plate vertical scan varied only 0.005 inches from plate to plate (for same nominal-thickness plates) and a maximum of only 0.003 inches within the same plate (for all plates). All overall plate wall averages were between 0.000 inches and 0.023 inches greater than their nominal plate thickness values. No reportable wall thinning, pitting indications or crack-like indications were found.

Figure 11-1. Scan Data Average Wall Thickness Compared to Nominal Plate Thickness

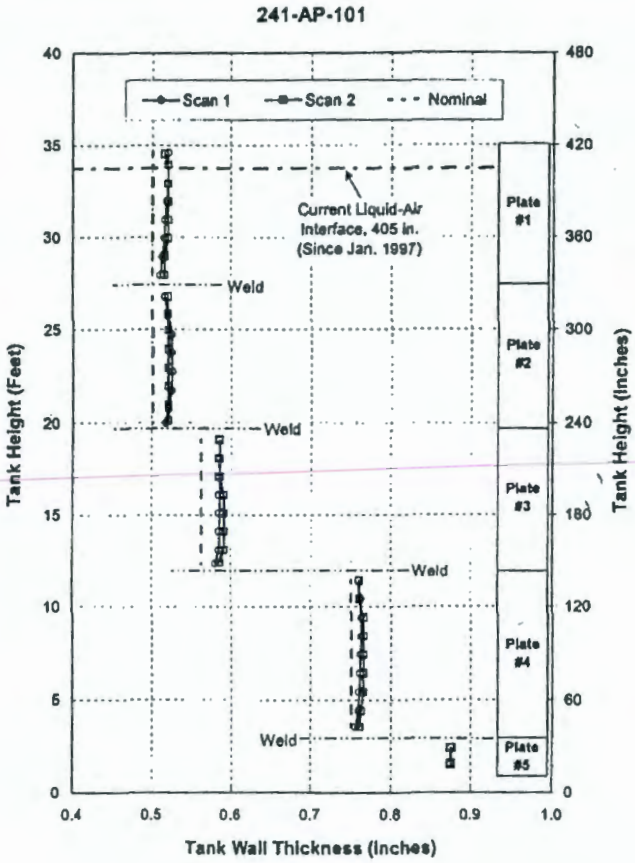

Lower Primary Knuckle Wall: A horizontal strip (19.6 feet long by approximately 12 inches wide) along the lower primary knuckle wall was examined using the P-scan system. The overall lower knuckle wall average (0.9373 inches) was virtually the same as the nominal plate thickness value (0.9375 inches). Vertical strips totaling 2.3 feet long by approximately 1 inch wide of the lower portion of the lower knuckle were examined using the P-scan transducer lined up with four different air slots. The inspections yielded wall thickness average values and minimum wall thickness values that exceeded the nominal value. No reportable wall thinning, pitting indications or crack-like indications were found using the P-scan system.

A horizontal scan (20.0 feet long) using the T-SAFT system was performed just above the lower knuckle weld, which probed the entire lower knuckle region below the transducers for circumferential cracks. No reportable crack-like indications were found using the T-SAFT system.

Primary Tank Welds: One vertical weld in each of the four lower Plates #2 through #5 was examined. No crack-like indications were found. There were also no reportable wall thinning or pitting indications found. The plate walls adjacent to the welds averaged 0.022 inches greater than to 0.002 inches less than their nominal plate thickness values.

Primary Tank Knuckle-to-Shell Weld: An approximately 20.5 feet long region of the horizontal knuckle-to-shell weld was examined. No crack-like indications were found. There were also no reportable wall thinning or pitting indications found. The plate walls adjacent to the weld averaged 0.002 inches greater than (plate side) to 0.002 inches less than (knuckle side) than their nominal plate thickness values.

11.2 DST ULTRASONIC INSPECTION DATA RESULTS COMPARISON

The following Tables 11-1 and 11-2 provide a summary of primary tank vertical wall inspection results and a comparison of primary tank wall thinning.

Table 11-1 reports the inspection results chronologically according to fiscal year (October 1 through September 30).

Table 11-1. Double-Shell Tanks Chronological Inspection Results Findings

Tank	Inspection Year (FY)	Reportable Plate Crack Indication	Reportable Plate Pitting	Reportable Plate Thinning	Reportable Weld Thinning, Pitting or Cracking
AW-103	1997	None	None	None	None
AN-107	1998	None	None	None	None
AN-106	1999	None	None	None	None
AN-105	1999	None	None	Two very minute areas of a plate (20% maximum reduction in thickness) [a]	None
AZ-101	1999	None	None	One area of a plate (11.4% maximum reduction in thickness)	None
AY-102	1999	None	None	None	None
AP-107	2000	None	None	None	None
AP-108	2000	None	None	Two minute areas of a plate (13.8% maximum reduction in thickness).	None [b]
AW-101	2001	None	None	A pit like indication in a very minute area of a plate (16% maximum reduction in thickness).	None
AW-105	2001	None	None	None	None
AY-101	2001	None	Pit-like indication at historical liquid-air interface	Some pit-like indications identified as thinning	Three areas of 10% wall thinning in vertical welds
AN-102	2001	None	None	One minute area of a plate (11% maximum reduction in thickness)	None

(Cont. on next page)

Table 11-1. (Cont.) Double-Shell Tanks Chronological Inspection Results Findings

Tank	Inspection Year (FY)	Reportable Plate Crack Indication	Reportable Plate Pitting	Reportable Plate Thinning	Reportable Weld Thinning, Pitting or Cracking
AN-101	2002	None	None	One small area of a plate (12 % maximum reduction in thickness)	Four local areas near vertical welds (14% maximum reduction in thickness)
AW-106	2002	None	None	One small area	10.4% maximum reduction in thickness
AY-101	2002	Not Investigated	None	72 areas of >10% wall thinning, most in the historical liquid-air interface in Plate #2 (20.2% maximum reduction in thickness)	Not Investigated
AW-104	2002	None	None	None	None
AW-102	2002 & 2003 [c]	None	None	None	None
AN-105	2002	None	None	None	Not Investigated
AP-101	2003	None	None	None	None

[a] Based on a review of the tank 241-AN-105 data gathering technique in FY 1999, prompted by the FY 2002 results, the FY 1999 wall thinning data is considered questionable.

[b] Although below reporting criteria at the time, one linear crack-like indication 6 inch long by 0.142 inch deep in a nominal 0.750 inch thick plate was observed. Subsequent examination of tank 241-AP-108 in FY 2002 revealed no change in size.

[c] Primary knuckle examination using T-SAFT conducted in FY 2003.

The inspection results in Table 11-1 show that the overall condition of the inspected tanks is satisfactory. Defects or minute reportable localized plate thinning may be due to various reasons, such as fabrication defects, construction damage or in-service corrosion.

Wall thickness data gathered from ultrasonic examination of seventeen DSTs were compared to evaluate the degree of wall thinning that may have occurred among the tanks examined. These wall thickness data do not allow a direct calculation of wall thinning, since no measurements were made of original plate thickness values at the time of construction. However, wall thickness data from ultrasonic testing may be compared to the specified nominal plate thickness. This assessment used the minimum wall thickness in each scanning area (generally 12 inch by 15 inch) from the vertical wall scans and then calculated the average for each plate using the minimum thickness values.

Table 11-2 provides a summary of wall thinning, defined as nominal plate thickness minus average minimum plate thickness[5], by nominal plate size, and by DST examined. The negative

[5] Average minimum plate thickness is defined as the average of all the minimum measured thickness values for each scanning area (generally 12 inch by 15 inch) for a given plate size and DST.

values in the table indicate where the average of all minimum values of plate thickness exceeds nominal plate thickness. The table also provides the calculated average wall thinning and associated standard deviation by DST examined for all nominal plate thickness values, and by nominal plate thickness for all DSTs examined.

Tank 241-AP-101 did not exhibit any significant thinning, with only the Plate #5 minimum values averaging slightly below (0.010 inch) the nominal plate thickness of 0.875 inch.

Table 11-2. Tank Wall Thinning by Nominal Plate Size

DST	FY Examined	Wall Thinning* By Nominal Plate Size (Inches)						
		0.375"	0.500"	0.5625"	0.750"	0.875"	AVG	STD DEV
AN-101	2002	n/a	0.008	n/a	0.027	0.015	0.013	0.014
AN-102	2001	n/a	0.004	n/a	0.003	0.005	0.004	0.016
AN-105	1999	n/a	0.026	n/a	0.007	0.001	0.019	0.032
AN-105	2002	n/a	0.015	n/a	n/exam.	n/exam.	0.015	0.021
AN-106	1999	n/a	0.006	n/a	0.015	0.012	0.009	0.009
AN-107	1998	n/a	-0.018	n/a	-0.015	0.013	-0.016	0.017
AP-101	2003	n/a	-0.008	-0.003	-0.002	0.010	-0.004	0.008
AP-107	2000	n/a	-0.011	-0.012	-0.017	-0.013	-0.013	0.008
AP-108	2000	n/a	-0.017	-0.012	-0.011	-0.005	-0.014	0.016
AW-101	2001	n/a	0.008	n/a	0.014	0.020	0.010	0.013
AW-102	2002	n/a	-0.019	n/a	-0.006	0.008	-0.014	0.012
AW-103	1997	n/a	-0.010	n/a	-0.005	0.004	-0.007	0.008
AW-104	2002	n/a	-0.036	n/a	-0.031	-0.007	-0.033	0.011
AW-105	2001	n/a	0.000	n/a	0.008	-0.003	0.002	0.018
AW-106	2002	n/a	-0.004	n/a	0.015	0.000	0.001	0.016
AY-101	2001	-0.011	0.030	n/a	0.018	0.012	0.030	0.029
AY-102	1999	-0.021	0.001	n/a	0.008	n/a	0.000	0.012
AZ-101	1999	0.021	0.027	n/a	0.020	0.003	0.024	0.011
AVG:		-0.006	0.000	-0.009	0.004	0.004		
STD DEV:		0.020	0.024	0.008	0.020	0.012		

* Thinning = nominal plate size – minimum thickness
n/a – not applicable; n/exam. – not examined

This page intentionally left blank.

12.0 FINDINGS, CONCLUSIONS, AND RECOMMENDATIONS

The findings, conclusions, and recommendations from the UT inspection of DST 241-AP-101 are listed below.

- No reportable wall thinning was detected in any of the vertical wall plate areas examined. The primary wall vertical scans (Plates #1 through #5) yielded overall average wall thickness values that equaled or exceeded the nominal wall thickness values. The minimum wall thickness values for the plates generally exceeded the nominal values. Of the 12 inch long vertical wall plate scans yielding minimums falling below the nominal values, the greatest deviation was 4.3% below the nominal (where reportable wall thinning is defined as greater than 10% below the nominal).

- No reportable wall thinning was detected in any of the lower primary knuckle areas examined. The primary knuckle horizontal scan yielded an overall average wall thickness values that was virtually the same as the nominal plate thickness value. All of the minimum wall thickness values for the knuckle horizontal scan were less than the nominal values, the greatest deviation being 7.7% below the nominal. Inspections of the lower portion of the lower knuckle using the P-scan transducer lined up with air slots yielded wall thickness average values and minimum wall thickness values that exceeded the nominal values.

- No reportable pitting indications nor any crack-like indications were detected in any of the vertical wall plates or lower primary knuckle. This includes 20 feet of the primary knuckle in which no circumferential crack-like indications were detected using both the P-scan and the T-SAFT systems. Although the P-scan system is limited to examining the upper two-thirds of the knuckle, the T-SAFT system is capable of probing the entire knuckle region for crack-like indications (from weld to weld, which includes the highest stress region).

- No crack-like indications were detected in any of the weld heat-affected zones. The primary tank vertical weld scans (Plates #2 through #5) and the knuckle-to-shell horizontal weld scan (Plate #5 to lower knuckle) yielded overall average wall thickness values that ranged from 0.002 inches below to 0.022 inches above the nominal values. There were no reportable wall thinning indications in any of the heat-affected zones, with the minimum wall thickness values ranging from 0.2% to 5.8% below the nominal values. In addition, there were no reportable pitting indications detected in any of the weld heat-affected zones.

- The absence of cracks in the plates and weld-heat-affected zones indicates that the pre-service material quality control, weld-stress relief treatment, and waste chemistry controls have been effective in preventing cracks.

- According to a recent Tank Integrity Assessment Project DST Lifecycle Schedule, tank 241-AP-101 is scheduled for its second UT examination in about eight years. Based on the results of this UT examination, it is recommended that this schedule be maintained – there is no reason to perform any near-term follow-up inspections on this tank. Following the second UT examination, inspection parameters such as wall thinning rates can be calculated and used to better quantify and evaluate any continual wall thinning or degradation.

13.0 REFERENCES

Bandyopadhyay, K. K., S. Bush, M. Kassir, B. Mather, P. Shewmon, M. Streicher, B. Thompson, D. van Rooyen, and J. Weeks. 1997. *Guidelines for Development of Structural Integrity Programs for DOE High-Level Waste Storage Tanks*, BNL-52527, Brookhaven National Laboratory, Upton, New York.

Braun-Hanford, 1986, *Tank Cross Section 241-AP Tanks*, H-2-90534, Rev. 3, Braun-Hanford Co., Richland, Washington.

Brevick, C. H., L. A. Gaddis and S. D. Consort, 1995, *Supporting Document for the Southeast Quadrant Historical Tank Content Estimate for AP-Tank Farm*, WHC-SD-WM-ER-315, Rev. 0, Westinghouse Hanford Company, Richland, Washington.

Doctor, S. R., G. J. Schuster, L. D. Reid, and T. E. Hall, 1996, *Real-Time 3-D SAFT-UT System Evaluation and Validation*, NUREG/CR-6344, PNNL-10571, Pacific Northwest National Laboratory, Richland, Washington

Hanlon, B. M., 2003, *Waste Tank Summary Report for Month Ending February 28, 2003*, HNF-EP-0182, Rev 179, CH2M HILL Hanford Group, Inc., Richland, Washington.

Jensen, C. E. 1995. *Acceptance Criteria for Non-Destructive Examination of Double-Shell Tanks*, WHC-SD-WM-AP-036, Revision 0, Westinghouse Hanford Company, Richland, Washington.

Jensen, C. E., 1999, *241-AP Double-Shell Tanks Integrity Assessment Report*, HNF-4958, Rev. 0, Lockheed Martin Hanford Corporation, Richland, Washington.

Jensen, C. E., 2000, *Engineering Task Plan for the Ultrasonic Inspection of Hanford Double-Shell Tanks - FY2000*, RPP-5583, Rev. 0, CH2M HILL Hanford Group, Inc., Richland, Washington.

Jensen, C. E., 2000a, *Engineering Task Plan for the Ultrasonic Inspection of Hanford Double-Shell Tanks - FY2001*, RPP-6839, Rev. 0, CH2M HILL Hanford Group, Inc., Richland, Washington.

Jensen, C. E., 2000b, *Ultrasonic Inspection Results of Double-Shell Tank 241-AP-108*, RPP-6684, Rev. 0-A, CH2M HILL Hanford Group, Inc., Richland, Washington.

Jensen, C. E., 2002, *Engineering Task Plan for the Ultrasonic Inspection of Hanford Double-Shell Tanks - FY2002*, RPP-7869, Rev. 0C, CH2M HILL Hanford Group, Inc., Richland, Washington.

Jensen, C. E., 2002a, *Engineering Task Plan for the Ultrasonic Inspection of Hanford Double-Shell Tanks 241-AP-108, 241-AY-101, and 241-AZ-102 - FY2002*, RPP-8867, Rev. 0B, CH2M HILL Hanford Group, Inc., Richland, Washington.

Jensen, C. E., 2002b, *Engineering Task Plan for the Ultrasonic Inspection of Hanford Double-Shell Tanks - FY2003*, RPP-11832, Rev. 0, CH2M HILL Hanford Group, Inc., Richland, Washington.

Jensen, C. E., 2003, *Ultrasonic Inspection Results of Double-Shell Tank 241-AW-102*, RPP-11581, Rev. 1, CH2M HILL Hanford Group, Inc., Richland, Washington.

Leshikar, G. A., 1997, *Final Report - Ultrasonic Examination of Tank 241-AW-103 Walls*, HNF-SD-WM-TRP-282, Rev. 0, SGN Eurisys Services Corporation, Richland, Washington.

Pfluger, D. C., 1999, *Engineering Task Plan for the Ultrasonic Inspection of Hanford Double-Shell Tanks*, HNF-2820, Rev. 2, Lockheed Martin Hanford Corporation, Richland, Washington.

Silver, D., 2000, *Administrative Order No.00NWPKW-1251, Failure to Comply with Major Milestone M-32 of the Tri-Party Agreement*, Washington State Department of Ecology, Olympia, Washington.

ATTACHMENT 1

AUTOMATED ULTRASONIC EXAMINATION FOR CORROSION AND CRACKING

(COGEMA Engineering Corporation
Procedure COGEMA-SVUT-INS-007.3, Rev. 1)

UNCONTROLLED COPY

This page intentionally left blank.

AUTOMATED ULTRASONIC EXAMINATION FOR CORROSION AND CRACKING

1.0 PURPOSE

This procedure establishes the method, equipment, and requirements for automated, direct contact, ultrasonic (UT) straight-beam, thickness measurements, angle beam flaw detection, and sizing in carbon steel waste storage tanks utilizing the "P-scan" ultrasonic imaging system.

2.0 SCOPE

2.1 Requirements

The requirements herein are applicable to weld inspection, crack detection, sizing, wall thickness measurement, and the detection of wall thinning conditions, such as pitting, erosion, and corrosion in double shell tanks from 0.100 inches to 1.0 inches in thickness. At least one side must be accessible and the component surface to be measured must be parallel with the opposite surface. The requirements are also applicable to the automated UT detection and depth sizing of surface connected planar flaws.

2.2 Scanning

Scanning is performed using remotely controlled automatic scanners.

2.3 Examinations

Examinations shall be performed from inside the annulus of the double shell tanks.

2.4 Instructions

This procedure provides the instructions for the use of Tip Diffraction Techniques including the Absolute Arrival Time Technique (AATT), and the Relative Arrival Time Technique (RATT), for the sizing of planar flaws.

2.5 Methodology

The methodology in this procedure meets the requirements as addressed in Reference 4.1 as applicable to meet the requirements for inspection of double shell tanks.

3.0 RESPONSIBILITIES

Only certified Level II or Level III ultrasonic examiners shall interpret data to determine whether it represents relevant or non-relevant indication in accordance with the applicable specification.

Level III ultrasonic examiners shall review all data collected prior to issuing a final report.

4.0 REFERENCES

4.1 ASME Boiler & Pressure Vessel Code, Section V, Article 4, 1995 Edition.

4.2 COGEMA SV-CP-PRC-014, Qualification and Certification OF NDE Personnel.

4.3 COGEMA SVAD-PRC-001, Nondestructive Examination Administrative Procedure.

4.4 COGEMA SVUT-PRC-007, Ultrasonic Examination Procedure.

4.5 FORCE Institutes, P-scan System 4 Instruction Manual

5.0 PERSONNEL REQUIREMENTS

5.1 Personnel Qualifications

Personnel performing or supervising data acquisition or performing data analysis to the requirements of this procedure shall be qualified and certified to at least level II in ultrasonics in accordance with reference 4.2 or equivalent. In addition, they shall be trained in techniques for sizing stress corrosion cracking/planar flaws.

5.2 Certification Level

Personnel performing review for final acceptance of examination data shall be certified to at least level II in ultrasonics in accordance with reference 4.2 or equivalent.

5.3 Support Personnel

Personnel, whose responsibilities are limited to set-up, tear down, and track or scanner operation need not be certified. Such personnel shall possess sufficient knowledge of the equipment to satisfy the Level III examiner.

6.0 EQUIPMENT

6.1 Ultrasonic Instrument/Examination System

The P-scan computerized pulse-echo ultrasonic inspection system shall be used. The system shall be equipped with a stepped gain control in units of 1dB with a dynamic range of at least 115 dB, capable of generating and receiving frequencies in the range of 0.5 to 15 MHz. The following components may be used:

PS-4	P-scan processor
Analysis computer	Off-line data analysis with P-scan analysis software
Digital Controller, WSC-2S, or other approved scan controller	Automatic scanner controller
AWS-5, AWS5-D, RUTI*	Automatic P-scan scanner
Pump	Couplant pump for P-scan system

*Remote Ultrasonic Inspection (RUTI) system

6.2 Transducers

Straight-beam and angle-beam transducers with single or dual elements, with or without delay tips, may be used, provided they can be attached to and manipulated by the scanner, and can be adequately coupled to the test item with a resultant backwall signal response of at least a 2 to 1 signal-to-noise ratio. Sizes and frequencies shall be as specified for the following applications:

6.2.1 For high sensitivity applications such as the detection of pitting, erosion or corrosion, transducer sizes in the range of 1/4 inch to 1/2 inch, with a frequency in the range of 4.0 to 10 MHz, shall be used.

6.2.2 For weld inspection, detection and sizing of planar flaws that are open to the surface, angle beam transducers with a nominal angle of 45 degrees with an element size in the range of 1/4 inch to 1/2 inch, with a frequency in the range of 4.0 to 10 MHz, shall be used. Where interference from weld geometry prevents examination of the required volume with a 45-degree a 60-degree angle may be substituted.

6.2.3 Transducers of other angles, element sizes, modes of propagation, or frequencies outside the above ranges may be used to suit other required examination techniques.

6.3 Cables

6.3.1 Cables of any compatible type and number of connectors may be used for examination. The length shall be limited to 400 feet, or less where signal

degradation occurs. The same cables shall be used for calibration and examination.

6.3.2 The scanner control cable for analog scanners shall be limited to 330 feet maximum. Digitally controlled scanners shall have a maximum cable length as stipulated by the manufacture's recommendation.

6.4 Couplant

6.4.1 Site approved water should be used as couplant for the examination.

6.4.2 Couplant application should be accomplished by means of an automatic couplant delivery system whenever possible. Care should be taken to use only as much water as required, as excess water in the annulus is undesirable.

6.5 User Calibration Blocks

6.5.1 For general thickness measurements, or the detection of pitting, erosion, or corrosion, user calibration blocks shall be made of an acoustically similar material as that being measured. A standard step block with 0.1 inch or greater increments encompassing the nominal thickness to be measured shall be used.

6.5.2 For weld inspection, crack detection and sizing measurements, user calibration blocks shall be made of an acoustically similar material as that being measured. A standard notched block with 0.1 inch or greater increments encompassing the nominal thickness to be measured shall be used.

6.6 Reference Blocks

Reference blocks (e.g., Rompas, IIW, DSC) utilized for beam angle exit point determination or screen width calibration shall be of similar material composition as the component under examination.

6.7 Pulse Repetition Rate

The repetition rates are set at rates such that signal wrap-around does not occur. In addition, the rates are sufficient to pulse the transducer at least six times within the time necessary to move one-half the transducer dimension parallel to the scan direction at maximum scanning speed.

7.0 CALIBRATION

7.1 Verification of Instrument Linearity

Instrument alignment verification for screen height and amplitude control should be performed within three (3) months prior to use of the instrument or at the beginning and end of each outage period, whichever is less. Instrument linearity verification is independent of transducer or scanner characteristics. Verification with one transducer/scanner combination is valid for any other combination. The due date for alignment verification shall be recorded on the calibration sheet.

7.2 System Parameters

The system parameters used for calibration and examination should be established as outlined in Reference 4.5 as required. The system should be operated in the T-SCAN program for thickness mapping and zero degree inspection and in the P-SCAN program for crack detection, weld inspection and/or additional evaluation.

7.3 General Requirements

7.3.1 Calibration shall include the complete ultrasonic examination system. Any change in transducers, wedges, couplants, cables, instruments, recording devices, scanners, power source, or any other parts of the examination system shall be cause for system calibration check.

7.3.2 If a secondary ultrasonic system is to be used, it must be calibrated before the inspection is started and not removed from the examination system during the inspection or recalibration will be required.

7.3.3 System calibration checks and final calibration for instrument sensitivity and sweep range shall be performed on the same block used for initial calibration using at least one reflector. These checks shall be performed:

a) At the start and finish of each series of examinations.
b) At intervals not to exceed 16 hours.
c) When there is a change as described in 7.3.1.
d) If the examiner suspects a malfunction.

7.3.4 If the horizontal sweep, thickness, or "Z" positions have changed more than 5 percent of the nominal thickness, void all examinations performed after the last valid calibration verification, and reexamine the voided areas.

7.3.5 Calibration checks may be performed on either a reference block or the basic calibration block, but must include a check of the entire examination system. Calibration checks may be accomplished by static or dynamic calibration.

7.3.6 Simulated calibration checks may be used in lieu of calibration checks where the spread of contamination or serious time constraints would result from performing a standard calibration check. Simulated calibration will use blocks, cables, or transducers of similar types and lengths as those used for testing and will be documented on the calibration data sheet. A baseline, simulated calibration shall be performed immediately after performing the initial calibration, or after a calibration check where the entire examination system is utilized. The initial simulated calibration check values are independent of the values obtained utilizing the entire examination system. The established tolerance applies to the subsequent simulated calibration checks.

7.3.7 During calibration, the temperature of the calibration block should be within 25 degrees of the ambient inspection temperature.

7.4 Calibration Process for Thickness Mapping / T-scan

The basic process for calibration is the same for thickness mapping (T-scan), weld inspection, flaw detection, and sizing. The calibration reflectors for straight beam are the backwall reflections from a step wedge. The reflectors for angle beam transducers are the notch base and tips from a notched block. The calibration process is as follows:

7.4.1 Select and connect the appropriate transducer(s), input the parameters, including thickness, frequency, index delay, gates, inspection method(s), and velocity. Apply the couplant to the applicable points on the calibration standard. (Select a sufficiently thin step for detection of unexpected low reading or pits and a step greater than the maximum thickness expected).

7.4.2 Place the transducer(s) on the calibration step nearest to the nominal thickness of the item to be examined. Adjust the gain control to produce a reflection of 80% full screen height (FSH). Input this gain level as the reference level. Obtain a response from the other calibration points, and verify that they produce an acceptable signal. Initial calibration accuracy

will be within +/- 0.010". in T-scan. Perform steps 7.4.1 and 7.4.2 for each physical transducer being used.

7.4.3 Position the transducer to produce a response from the smaller of the two (2) steps to be used for calibration. Using the scan menu, collect a reading from that step. The transducer may be removed from the scanner and remain stationary "static" while the scanner is manipulated to make a larger indication on the screen.

7.4.4 Position the transducer on the thicker step and collect data from that step. Using the level control, measure the thickness from each step. Adjust the system to read the correct thickness with index delay and velocity if needed.

7.4.5 Repeat these steps as required until the system is accurately measuring the thickness over the entire inspection range with each transducer/active inspection. During initial calibration, all intermediate steps within the inspection range should be confirmed.

7.4.6 The vital parameters used for the calibration shall be identical to the inspection parameters with the exceptions of file name(s), X, Y and Z ranges, reference level compensations, thickness, gates or comment parameters which may be adjusted as required.

7.4.7 At a minimum, readings from the thinnest and thickest calibration reflectors shall be recorded for each applicable transducer on the Automated Ultrasonic Thickness Calibration Sheet (Attachment 4).

7.5 Calibration Process for Weld Inspection / Crack Detection / P-scan

7.5.1 Select and connect the appropriate transducer(s), input the parameters, including thickness, frequency, index delay, gates, inspection method(s), and velocity. Apply the couplant to the applicable points on the calibration standard. The 5%T notch on a 1" thick plate should be used to obtain the reference level.

7.5.2 Manipulate the transducer to receive the maximum response from the reference notch. Adjust the gain control to produce a reflection of 80% full screen height (FSH). Input this value as the reference level. Obtain a response from the calibration reflector and verify that the response is within +/- 2dB.

7.5.3 Position the transducer to produce a response from the reference reflector. Using the scan menu, collect data from that notch. The transducer may be removed from the scanner and remain stationary "static" while the scanner is manipulated to make an indication on the screen.

7.5.4 Use the level control to determine the peak amplitude and the position of the indication at the peak amplitude. Use index delay and velocity (if required) to adjust the system to plot the reflectors in the appropriate positions. The ID notch should plot on the ID at or near the peak amplitude.

7.5.5 Repeat steps 7.5.2 through 7.5.3 as required for each transducer until the system is calibrated.

7.5.6 The vital parameters used for the calibration shall be identical to the inspection parameters with the exceptions of file name(s), X, Y and Z ranges, reference level compensations, thickness, gates or comment parameters which may be adjusted as required.

7.5.7 The calibration reflector(s) and response shall be recorded for each applicable transducer on the Automated Ultrasonic P-Scan Calibration Sheet (Attachment 7).

7.6 Sizing Calibration for Tip Diffraction Techniques (AATT, RATT)

a) Select an appropriate transducer.

b) Select a sizing calibration block of similar thickness and material containing at least two notches of known depths.

c) For the AATT technique, set at least two gates, to cover the entire area of interest. The first gate in the first leg, ending just before the ID. Position the transducer on the calibration block. Alternately peak the shallow and deep signals from the notch tips (see Attachment 6). Using the index delay and velocity controls, adjust the system until the system correctly reads the remaining ligament with the "Z" cursor.

d) For the RATT technique, the system mode should be set to A-SCAN. Manipulate the transducer until signals are obtained from the shallow notch tip and the notch base simultaneously (see Figure 2, Attachment 6). Using the index delay and velocity, adjust the distance between the two signals to read the actual reflector depth in inches. Repeat the same process on the deep

notch. Alternate this procedure until the screen/system represents a desirable linear depth screen in inches.

e) Save the calibration, and record this data on the Automated Ultrasonic P-Scan Calibration Sheet (Attachment 7).

8.0 EXAMINATION

8.1 Surface Condition

8.1.1 The surface from which measurements are to be taken should be free of loose scale, unbonded coating, heavy oxidation, weld spatter, or other material which may interfere with movement of the transducer or the transmission of sound into the material.

8.1.2 A surface finish of 250 RMS or better should be provided. The requesting organization must approve the use of any base material preparation process, which may reduce the thickness below the allowable tolerance.

8.2 Extent of Examination

The location of the areas to be measured and/or the number of scans to be performed shall be designated by the applicable work instructions. The location, scan numbers, and reference points of all scans shall be recorded on the applicable data sheets. See attachment 1 for minimum examination volume and beam direction for weld inspection.

NOTE: Additional scan areas will not require revision to this procedure.

8.3 Flaw Location

When performing examinations to detect planar flaws, angle beam transducers shall be used. Calibration is performed as in Section 7.5. All angle beam examinations shall be performed in P-scan.

8.4 Ultrasonic Measurement

User calibration shall have been completed per the applicable requirements of Section 7.0 prior to performing any of the examinations.

8.4.1 The amplitude of the first back reflection obtained from the item to be examined shall be adjusted as necessary using the Transfer Correction to

maintain approximately the same amplitude as that used for calibration. The dB value obtained with straight beam transducer should be recorded on the report. This value should be considered during analysis of P-scan angle beam data also.

8.4.2 Transducer overlap between passes shall be a minimum of 50% of the element size. Scanning speed shall not exceed 6 inches per second.

8.4.3 Should measurements be observed larger or smaller than the range calibrated for in Section 6.0, check the calibration for accuracy in the encountered thickness range. If the calibration is accurate in this range, amend the calibration sheet and continue the examination. If the calibration is not within the tolerance allowed in the spec, then recalibrate and rescan all areas where readings were encountered outside the originally calibrated range.

8.5 Limitations and Precautions

8.5.1 Care must be taken to ensure the transducer face is flush with the examination surface during scanning.

8.5.2 When it is necessary to determine the origin of mid-wall indications, a 4MHz shear wave transducer(s) may be used in the P-Scan program to detect pit openings or perpendicular connections between laminar indications.

8.6 Recording

Upon completion of each scan area, the data file(s) shall be recorded on a disk. All measurements within the predetermined gated area are stored, along with the text information with each file.

8.7 General Sizing Guidelines

8.7.1 It is recognized that, of the methods of sizing described in this procedure, no one technique is completely accurate in sizing all flaws in all thicknesses. By using complementary methods, however, a realistic approximation of the flaw depth can be obtained.

8.7.2 The method of sizing pits is primarily utilizing a zero degree dual element transducer. The 45-degree shear wave transducers may be used to confirm qualitatively the depth of the pit.

8.7.3 When sizing crack-like indications, the entire flawed area shall be scanned with the imaging mode. The entire flaw length shall be evaluated. It is recommended that A-Scans be recorded at the deepest location of the flaw. The primary technique for sizing crack-like indications is the high frequency, 45 degree shear wave transducer utilizing the Absolute Arrival Time Technique (AATT). The dual element, straight beam may be used as a complimentary technique.

8.7.4 Additional sizing technique sequences may be utilized if the primary techniques identified prove to be indeterminable.

8.8 Sizing with Tip Diffraction Techniques (AATT, RATT)

8.8.1 The AATT technique uses shear waves to obtain a diffracted echo (satellite pulse) from the flaw tip (see Figure 1 Attachment 6). The RATT technique uses shear wave reflected signals from both the flaw tip and the flaw base (see Figure 2 Attachment 6). Both techniques can be utilized using the same transducer.

a) AATT Technique

Locate the deepest extremity of the flaw and maximize the signal from the flaw tip. The distance to the flaw tip represents the remaining material ligament from the outside surface. To determine the relative through wall flaw depth, subtract this dimension from the local material wall thickness.

b) RATT Technique

Locate the deepest extremity of the flaw, and obtain a signal from the flaw base. Manipulate the transducer until the doublet (flaw base and tip signal appearing simultaneously) is observed. These signals do not have to be peaked, as the doublet separation directly indicates the relative through wall depth. To determine remaining material ligament, subtract the relative through wall depth measurement from the local material wall thickness.

8.8.2 Other sizing techniques or variations to the techniques may be used with the approval of the UT Level III. Such approval, signature and a

description of the technique shall be recorded in the "Remarks" column on the Ultrasonic Sizing Calibration Sheet (Attachment 7).

9.0 EVALUATION

9.1 Relevant Indications

Relevant indications including pitting, thinning and crack-like indications along with the minimum thickness reading in the area of interest shall be recorded and used for evaluation per Paragraph 9.2.

9.1.1 P-scan data shall be evaluated to a sensitivity of 20% reference level (-14dB). All crack-like indications are recordable regardless of amplitude.

9.1.2 T-scan data shall be evaluated utilizing all available images to detect and evaluate indications.

9.1.3 Reportable indications shall be evaluated by Level III personnel prior to final report submittal.

9.2 Reporting/Special Criteria

Reporting and special notification criteria are noted in Section 9.8.

9.3 Statistical Information

The statistical information (Minimum and Mean thickness) provided under "Setup" pages 1 & 2 of the post-processing software should be reported for each "Part" of a given scan location. Where data noise invalidates these values, the analyst should determine the values using the level control.

9.4 Printouts

Printouts should be made in accordance with the customer's request. In absence of further direction, both the merged set-up pages and the merged image, adjusted to show the minimum thickness, shall be printed at a level that best shows the wear patterns or at Nominal T - 12.5%, whichever provides the most useful information. P-scan data should be printed with the level control set at 20% reference level (-14dB).

9.5 Recording Crack Size

9.5.1 All flaw sizing data acquired should be used to determine the flaw depth. This data shall be reported individually for each flaw and shall include all data necessary to achieve the best accuracy of flaw depth.

9.5.2 If, during sizing, a flaw length other than that reported during the detection examination is measured, or other discrepant conditions occur, record the corrected lengths, locations. or distances on the Ultrasonic P-scan Data Report (Attachment 8) in the spaces provided.

9.5.3 If, during sizing, the area is determined not to be flawed, and the resultant reflector(s) is due to component/weld geometry or metallurgical structure, the true origin (e.g., root, mismatch, etc.) shall be documented and substantiated on the Ultrasonic P-scan Data Report.

9.6 Scanning Limitations

Record all limitations due to weld configurations, obstructions, single side access restrictions, etc., in the remarks section on the applicable Ultrasonic Data Report. Details as to specific length or area in relation to L (X) and/or W (Y) reference points should be recorded.

9.7 Flaw Evaluation

Reportable indications shall be evaluated by Level III personnel prior to final report submittal.

9.8 Reporting Levels

All indications which meet or exceed the following conditions shall be reported to the project cognizant engineer.

a) Pit depth exceeds 25% of the wall thickness.

b) Wall thinning exceeds 10% of the wall thickness.

c) Surface crack depths exceeding 0.18 inches.

10.0 REPORTS

10.1 Thickness Data Reports

An Automated Ultrasonic Thickness Data Report (Attachment 3) shall be prepared for each examination or series of examinations performed. This report shall include identity of equipment, the thickness measurements obtained, and should be referenced to the calibration sheet.

10.2 Calibration Reports

An Automated Ultrasonic Examination Calibration Sheet (Attachment 4) shall be prepared for each examination or series of examinations performed. This report shall include the materials and equipment used for examination.

10.3 Sketch Sheets

An Automated Ultrasonic Examination Sketch Sheet (Attachment 5) should be prepared for each examination or series of examinations performed. This report should include identity of scanning equipment and a sketch of the component or item examined, identifying scan locations, including dimensions, reference points, and grid locations, where applicable.

10.4 Sizing Data Reports

An Ultrasonic Sizing Data Report (Attachment 8) shall be completed only when cracking is detected. Each report shall be related to the applicable Automated Ultrasonic Examination Calibration Sheet(s).

10.5 Cover Sheets

Whenever several locations are being examined on the same conponent an Automated Ultrasonic Examination Report Cover Sheet (Attachment 1) and an Automated Ultrasonic Thickness Report Summary Sheet (Attachment 2) should be completed.

10.6 Final Reports

Final reports are to be distributed and maintained in accordance with the applicable contract.

11.0 ATTACHMENTS

11.1 Attachment 1: Examination Volume, Minimum Beam Directions and Extent of Examination

11.2 Attachment 2: Sample Automated Ultrasonic Thickness Data Report

11.3 Attachment 3: Sample Automated Ultrasonic Thickness Calibration Sheet

11.4 Attachment 4: Figure 1: Absolute Arrival Time Technique (AATT)
Figure 2: Relative Arrival Time Technique (RATT).

11.5 Attachment 5: Sample P-scan Calibration Data Sheet

11.6 Attachment 6: Sample Ultrasonic P-scan Data Report

Attachment 1: Examination Volume, Minimum Beam Directions and Extent of Examination

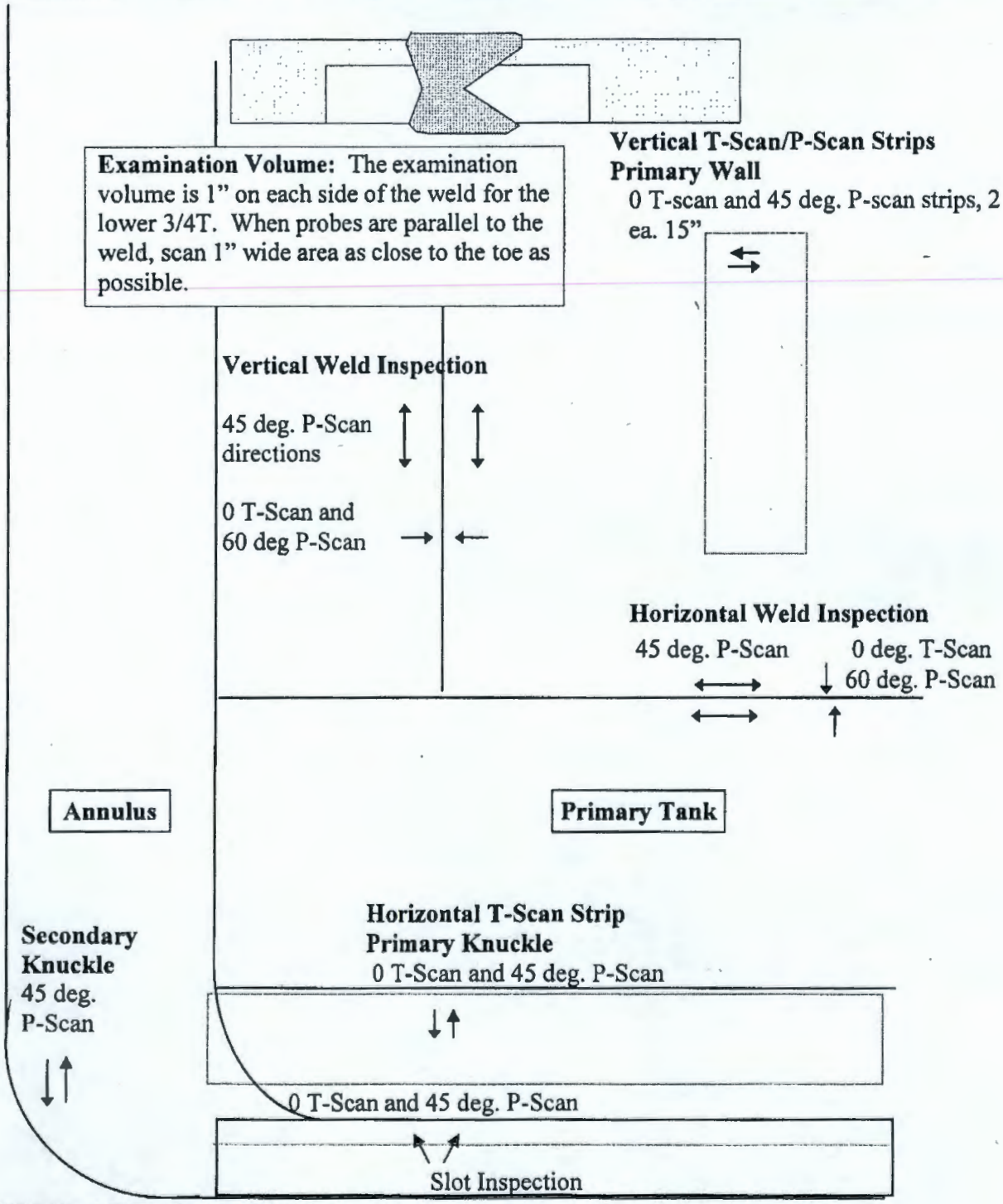

Attachment 1 (continued): Extent of Examination

Primary Tank Wall

Vertical Strips - Examine a vertical strip 30" x 35 feet long of the primary wall between the upper haunch transition and the lower knuckle for pits, cracks and wall thinning. Axial cracks on the tank inner wall surface shall be detected and sized. The vertical strip may be comprised of one or more strips whose total width is equal to 30 inches.

Weld Areas - Examine 20 feet of horizontal weld area (heat affected zone), at tank to knuckle weld. Examine one ~10 foot section of vertical weld joining the lowest shell course plates and one ~10 foot section of vertical weld joining the next to lowest shell course plates. Axial and circumferential cracks on the tank inner surface shall be detected and sized.

Primary Tank Knuckle

Examine 20 feet of the primary tank lower knuckle in the circumferential direction to detect and size cracking in the circumferential direction and to detect pits and wall thinning. The area to be examined is from the weld joining the transition plate with the knuckle to the furthest reach of the transducer assembly that is allowed by geometric constraints.

Secondary Tank

Secondary Tank Lower Knuckle – Examine a 20 foot length of the secondary tank knuckle over the entire area of the knuckle for the presence of circumferential cracks.

Secondary Tank Bottom – Examine the secondary tank bottom over an area of 10 ft^2 to detect and measure thickness and pits.

Primary Tank Bottom

Examine the primary tank bottom for pits, wall thinning and cracks oriented in the circumferential direction (perpendicular to the air channels) in 16 air channels. The tank bottom is to be examined for a distance of 12 feet towards the tank center, starting seven inches inboard of the outside radius of the tank cylindrical section. The primary tank bottom scan head is designed to examine the accessible area in the air channel in one pass through the channel.

COGEMA ENGINEERING CORP.

COGEMA-SVUT-INS-007.3, Rev. 1
UNCONTROLLED COPY

AUTOMATED ULTRASONIC EXAMINATION FOR CORROSION AND CRACKING

Attachment 2: Sample Automated Ultrasonic Thickness Data Report

4/00

AUTOMATED ULTRASONIC THICKNESS DATA REPORT

LOCATION	SYSTEM	EXAM START	EXAM END	JOB #
COMPONENT ID		EXAMINATION SURFACE ☐ OD ☐ ID ☐ PAINTED		NOM. THICKNESS
CONFIGURATION	TO	CALIBRATED RANGE		TEMP °F
CIRCUMFERENCE/TOTAL LENGTH EXAMINED		REF. LEVEL CORRECTION (TRANS. CORR) _____ DB		
PROCEDURE	REV	MATERIAL TYPE ☐ SS ☐ CS OTHER _____		CONDITION
FILE NAME/ITEM#		TRANSDUCER ☐ DUAL ☐ SGL ☐ 0DEG ☐ ANGLE _____		
X_0 REF. POINT (L_0)	Y_0 REF. POINT (W_0)	SCAN WIDTH		

PART # / INDICATION	X START	X STOP	Y START	Y STOP	AVE. THK.	MIN. THK, R. LIG.	AREA REPORTABLE	COMMENTS
SUMMARY								

REMARKS_____

Examiner	Analyst	Reviewer	Page
_____	_____	_____	
Level ___ Date_____	Level ___ Date_____	Level ___ Date_____	___ of ___

COGEMA ENGINEERING CORP.

AUTOMATED ULTRASONIC EXAMINATION FOR CORROSION AND CRACKING

Attachment 3: Sample Automated Ultrasonic Thickness Calibration Sheet

4/00	AUTOMATED ULTRASONIC THICKNESS CALIBRATION SHEET	

LOCATION	SYSTEM	CALIBRATION BLOCK	
PROCEDURE		THICKNESS	MATERIAL
UT SYSTEM	SERIAL #	REFERENCE BLOCK	
SOFTWARE VERSION	REV.	THICKNESS	MATERIAL
LINEARITY DUE DATE		REFERENCE BLOCK TEMP °F	PYRO SN.
SCANNER TYPE	SERIAL #	COUPLANT	BATCH #
SCANNER CABLE		CABLE LENGTH	CABLE #
SIGNAL CABLE		CABLE LENGTH	CABLE #

CHANNEL	TRANSDUCER MAKE	MODEL	FREQ.	SIZE	SERIAL #	GATE EVAL METHOD	ANGLE	WEDGE TYPE	IMAGE
1									
2									
3									
4									

INITIAL CALIBRATION		CALIBRATION CHECKS							
DATE									
TIME									
REFLECTOR									
CH. 1	THK.1								
	THK. 2								
CH. 2	THK.1								
	THK. 2								
CH. 3	THK.1								
	THK. 2								
CH. 4	THK.1								
	THK. 2								
FILE #									
EXAMINER									

REMARKS_____

Examiner	Examiner	Reviewer	
_____	_____	_____	
LEVEL ___ DATE_____	Level ___ Date_____	Level ___ Date_____	

Attachment 4: Absolute Arrival Time Technique (AATT) & Relative Arrival Time Technique (RATT)

Figure 1. Absolute Arrival Time Technique

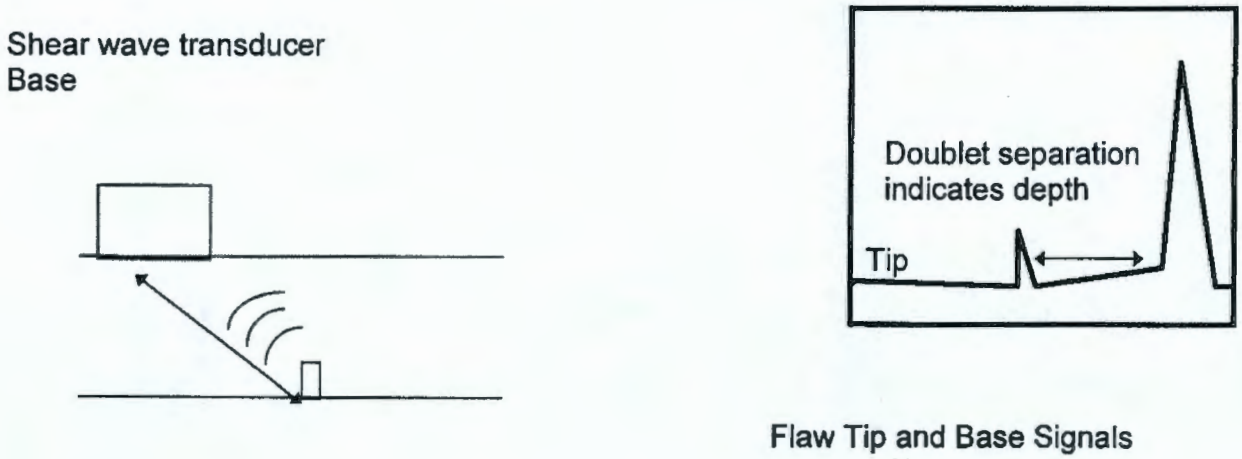

Figure 2. Relative Arrival Time Technique

COGEMA ENGINEERING CORP.

COGEMA-SVUT-INS-007.3, Rev. 1
UNCONTROLLED COPY

AUTOMATED ULTRASONIC EXAMINATION FOR CORROSION AND CRACKING

Attachment 5: Sample P-scan Calibration Sheet

4/00	**AUTOMATED ULTRASONIC P-SCAN CALIBRATION SHEET**	

LOCATION	SYSTEM	CALIBRATION BLOCK	
PROCEDURE		THICKNESS	MATERIAL
UT SYSTEM	SERIAL #	REFERENCE BLOCK	
SOFTWARE VERSION	REV.	THICKNESS	MATERIAL
LINEARITY DUE DATE		REFERENCE BLOCK TEMP °F	PYRO SN.
SCANNER TYPE	SERIAL #	COUPLANT	BATCH #
SCANNER CABLE		CABLE LENGTH	CABLE #
SIGNAL CABLE		CABLE LENGTH	CABLE #

CHANNEL	TRANSDUCER MAKE	MODEL	FREQ.	SIZE	SERIAL #	GATE EVAL METHOD	ANGLE NOM./ACT.	WEDGE TYPE	IMAGE
1									
2									
3									
4									

INITIAL CALIBRATION			CALIBRATION CHECKS						
DATE									
TIME									
REFLECTOR / ORRIENTATION									
CH. 1	AMPLITUDE								
	LOCATION								
CH. 2	AMPLITUDE								
	LOCATION								
CH. 3	AMPLITUDE								
	LOCATION								
CH. 4	AMPLITUDE								
	LOCATION								
FILE #									
EXAMINER									

REMARKS_____

Examiner	Examiner	Reviewer	Page
_____ Level ___ Date_____	_____ Level ___ Date_____	_____ Level ___ Date_____	___ of ___

COGEMA ENGINEERING CORP.

Attachment 6: Sample P-scan Data Report

4/00	ULTRASONIC P-SCAN DATA REPORT			
LOCATION	SYSTEM	EXAM START	EXAM END	JOB #
COMPONENT ID		EXAMINATION SURFACE ☐ OD ☐ ID ☐ PAINTED		CONDITION
CONFIGURATION	TO	CALIBRATED RANGE		TEMP °F
CIRCUMFERENCE/TOTAL LENGTH EXAMINED		REF. LEVEL CORRECTION (TRANS. CORR) _____ DB		
PROCEDURE	REV	MATERIAL TYPE ☐ SS ☐ CS OTHER _____		
FILE NAME/ITEM#		TRANSDUCER ☐ DUAL ☐ SGL ☐ 0DEG ☐ ANGLE _____		
X_0 REF. POINT (L_0)	Y_0 REF. POINT (W_0)	SCAN WIDTH		

SIZING METHOD	ANGLE	REFERENCE CAL. SHEET	SET-UP
1 45/60 DEGREE SHEAR			
2 AATT			
3 RATT			
4 DUAL 0 DEGREE			

INDICATION INFORMATION

IND	METHOD	WELD SIDE	DEPTH R. LIG.	MAX AMP	X1	LENGTH	X2	Y1	WIDTH	Y2	INDICATION TYPE

REMARKS

Examiner	Analyst	Reviewer	Page
_____	_____	_____	___ of ___
Level ___ Date_____	Level ___ Date_____	Level ___ Date_____	

ATTACHMENT 2

ULTRASONIC EXAMINATION OF THE KNUCKLE REGION

**(COGEMA Engineering Corporation
Procedure COGEMA-SVUT-INS-007.5, Rev. 0)**

UNCONTROLLED COPY

This page intentionally left blank.

1.0 PURPOSE

This procedure establishes the method, equipment, and requirements for the direct contact, ultrasonic angle beam flaw detection and sizing, in the knuckle region of Hanford's carbon steel double shell tank's (DSTs) utilizing the Remotely Operated Nondestructive Examination (RONDE) ultrasonic imaging system.

2.0 SCOPE

2.1 Requirements

The requirements herein are applicable to examination of the knuckle region of Hanford's DSTs utilizing the RONDE ultrasonic imaging system. The RONDE system provides ultrasonic detection and sizing of surface connected planar flaw (i.e. cracks) that are oriented circumferentially around the tank in the knuckle region.

2.2 Scanning

Scanning is performed using a remotely controlled scanner.

2.3 Examinations

Examinations shall be performed from inside the annulus region of the DSTs.

2.4 Instructions

This procedure provides the instructions for the use of the RONDE system in the pitch-catch mode for detection of planar flaws oriented circumferentially in the knuckle region of the DSTs and in the Tandem SAFT (T-SAFT) mode for depth sizing of planar flaws oriented circumferentially in the knuckle region of the DSTs.

2.5 Methodology

The methodology in this procedure meets the applicable requirements addressed in Reference 4.1 as applicable to meet the requirements for inspection of the double shell tank knuckle region.

3.0 RESPONSIBILITIES

Only certified Level II or Level III ultrasonic examiners shall interpret data to determine whether they represent relevant or non-relevant indications in accordance with the applicable specification. Level III ultrasonic examiners shall review all data collected prior to issuing a final report.

4.0 REFERENCES

4.1 ASME Boiler & Pressure Vessel Code, Section V, Article 4, 1995 Edition.

4.2 COGEMA SVCP-PRC-014, Qualification and Certification of NDE Personnel.

4.3 COGEMA SVAD-PRC-001, Nondestructive Examination Administrative Procedure.

4.4 COGEMA SVUT-PRC-007, Ultrasonic Examination Procedure.

4.5 RONDE Instruction Manual

5.0 PERSONNEL REQUIREMENTS

5.1 Personnel Qualifications

Personnel performing or supervising data acquisition or performing data analysis to the requirements of this procedure shall be qualified and certified to at least Level II in ultrasonics in accordance with reference 4.2 or equivalent. In addition, they shall be trained in techniques for sizing stress corrosion cracking/planar flaws using SAFT/T-SAFT.

5.2 Certification Level

Personnel performing review for final acceptance of examination data shall be certified to at least Level II in ultrasonics in accordance with reference 4.2 or equivalent.

5.3 Support Personnel

Personnel, whose responsibilities are limited to set-up, tear down, and track or scanner operation need not be certified. Such personnel shall possess sufficient knowledge of the equipment to satisfy the Level III examiner.

6.0 EQUIPMENT

6.1 Ultrasonic Instrument/Examination System

The RONDE ultrasonic system shall be used for the examination of the knuckle region of the Hanford DST's. The system shall be equipped with a stepped gain control in units of 1 dB with a range of at least 75 dB, capable of generating and receiving frequencies in the range of 0.5 to 5 MHz. The following components may be used:

RITEC	Pulser/Receiver
Intel P4/2.5 GHZ	Acquisition Computer
Compumotor/Precision Motion Control	Stepper Motors and Control
GXS-MC-2600	Magnetic Wheel Crawler
Pump	Couplant Pump for RONDE System
Dell	Data Acquisition and Analysis Computers

6.2 Transducers

Angel beam transducers that produce shear waves at 70 degrees shall be used for the knuckle region inspection. The transducer diameter shall be approximately 0.5 inches, with a center frequency of approximately 3.5 MHz.

6.3 Cables

Cables of any compatible type and number of connectors may be used for the examination. The length of the cables between the tank top electronics enclosure and the scanning crawler should not be greater than 100 feet. The length of cables between the tank top electronics enclosure and the control trailer should not exceed 425 feet.

6.4 Couplant

6.4.1 Site approved water should be used as couplant for the examination.

6.4.2 Couplant application should be accomplished by means of an automatic couplant delivery system whenever possible. Care should be taken to use only as much water as required, as excess water in the annulus is undesirable.

6.5 User Calibration Blocks

For crack detection and sizing measurements, user calibration blocks shall be made of an acoustically similar material as that being measured.

6.6 Reference Blocks

Reference blocks (e.g. Rompas, IIW, DSC) utilized for beam angle exit point determination or screen width calibration shall be of similar material composition as the component under examination.

6.7 Pulse Repetition Rate

The repetition rates are set at rates such that signal wrap-around does not occur.

7.0 CALIBRATION

7.1 Verification of Instrument Linearity

Instrument alignment verification for screen height and amplitude control linearity should be performed within three (3) months prior to use of the instrument or at the beginning and end of each outage period, whichever is less. Instrument linearity verification is independent of transducer or scanner characteristics. Verification with one

transducer/scanner combination is valid for any other combination. The due date for alignment verification shall be recorded on the calibration sheet.

7.2 System Parameters

The system parameters used for calibration and examination should be established as outlined in Reference 4.5 as required.

7.3 General Requirements

7.3.1 Calibration shall include the complete ultrasonic examination system. Any change in transducers, wedges, couplants, cables, instruments, recording devices, scanners, power source, or any other parts of the examination system shall be cause for system calibration check.

7.3.2 System calibration checks and final calibration for instrument sensitivity and sweep range shall be performed on the same block used for initial calibration using at least one reflector. These checks shall be performed:

a) At the start and finish of each series of examinations.
b) At intervals not to exceed 16 hours.
c) When there is a change as described in 7.3.1.
d) If the examiner suspects a malfunction.

7.3.3 During calibration, the temperature of the calibration block should be within 25 degrees Fahrenheit of the ambient inspection temperature.

7.4 Calibration Process for Knuckle Crack Detection and Sizing

7.4.1 Select and connect the two appropriate transducers (X1 and X2). Verify the parameters, including thickness, frequency, and velocity. Place the SAFT/T-SAFT Scanning Bridge on the calibration fixture. Apply the couplant to the applicable point on the calibration standard. The 10%T notch on a 0.875-inch thick plate should be used to obtain the reference level.

7.4.2 Assure transducers are in the park position. Translate X1 and X2 transducers one inch to the start of scan sequence. Position gain control knob to 20 dB. Acquire one 10-inch line of data. Envelope detect and

project this data file. Utilizing the SAFT Analyses code, record the amplitude from the 10% notch. For later amplitude calibration checks, verify that the amplitude is within ± 3dB. Also record the distance between the 10% notch and the end of the plate signal. Verify that this distance is within ± 0.1 inch of the calibration standard.

7.4.3 The vital parameters used for the calibration shall be identical to the inspection parameters with the exception of file names, X, Y, and Z ranges, reference level compensations, thickness, velocity, or comment parameters, which may be adjusted as required.

7.4.4 The calibration reflector response and distance between notch and end of plate shall be recorded for each transducer pair on the SAFT/T-SAFT Ultrasonic Examination Calibration Sheet (Attachment 2).

8.0 EXAMINATION

8.1 Surface Condition

8.1.1 The surface from which measurements are to be taken should be free of loose scale, unbonded coating, heavy oxidation, weld spatter, or other material, which may interfere with movement of the transducer or the transmission of sound into the material.

8.1.2 A surface finish of 250 RMS or better should be provided. The requesting organization must approve the use of any base material preparation process, which may reduce the thickness below the allowable tolerance.

8.2 Location of the Scanning Bridge

The location of the scanning bridge is critical in providing consistent and repeatable data acquisition. Location of the lower feet of the scanning bridge just below the upper knuckle weld is the desired position.

8.3 Extent of Examination

See Attachment 1 for examination parameters of the knuckle region. The location, scan numbers, and reference points of all scans shall be recorded on the applicable data sheets.

8.4 Ultrasonic Measurement

User calibration shall have been completed per the applicable requirements of Section 7.0 prior to performing any of the examinations.

8.4.1 Transducer overlap between passes shall be a minimum of 50% of the element size for planar flaw detection and sizing. Scanning speed shall not exceed 6 inches per second.

8.4.2 Should measurements be observed larger or smaller than the range calibrated for in Section 7.0, check the calibration for accuracy in the encountered thickness range. If the calibration is accurate in this range, amend the calibration sheet and continue the examination. If the calibration is not within the tolerance allowed in the spec, then recalibrate and rescan all areas where readings were encountered outside the originally calibrated range.

8.5 Limitations and Precautions

8.5.1 Care must be taken to ensure the transducer face is flush with the examination surface during scanning.

8.6 Recording

Upon completion of each scan area, the data file(s) shall be saved on the hard drive.

8.7 Flaw Detection and Location

Flaw detection and location shall be performed using the pitch-catch mode. Data is analyzed to provide the detection of the planar flaw, location, and length sizing in the knuckle region.

8.8 General Sizing Guidelines

8.8.1 T-SAFT provides a means for sizing the depth or through-wall dimension of vertically oriented planar defects.

8.8.2 T-SAFT uses a transmitting and receiving transducer pair in a pitch-catch arrangement.

8.8.3 When sizing planar defects, the entire flawed area shall be scanned in the T-SAFT mode and evaluated.

8.9 Sizing Utilizing the T-SAFT Technique

8.9.1 The peak response from the corner trap of the planar flaw is used to initially set up the T-SAFT scanning. Location of this corner trap is found using the pitch-catch data.

8.9.2 For T-SAFT data acquisition, the two tandem transducers are positioned side by side at the peak (corner trap) response location.

8.9.3 The transmit and receive transducers are moved in opposite directions approximately 4 inches (or as much as possible) prior to initiating the T-SAFT scan.

8.9.4 The tandem data acquisition begins by scanning the two transducers towards each other, up to the mid-point of the scan (corner trap location) and continuing way from each other, to the end of the scan line. Once the scan line is complete, the pair of transducers returns to their start positions, are both incremented circumferentially (around tank), and start the next scan line.

8.9.5 Flaw depth is determined as half the distance from the upper half amplitude point to the lower half amplitude point in the B-scan views. The half amplitude points correspond to the –6dB points in the appropriate image.

8.9.6 Flaw length is determined by the loss of signal at the –10dB point from the pitch-catch corner trap signal.

9.0 EVALUATION

9.1 Relevant Indications

9.1.1 All crack-like indications are considered relevant and shall be recorded.

9.1.2 Reportable indications shall be evaluated by Ultrasonic Level III personnel prior to final report submittal.

9.2 Reporting/Special Criteria

Reporting and special notification criteria are noted in Section 9.8.

9.3 Printouts

Printouts of ultrasonic data should be made in accordance with the customer's request.

9.4 Recording Crack Size

All flaw sizing data acquired should be used to determine the flaw depth. This data shall be reported individually for each flaw and shall include all data necessary to achieve the best accuracy of flaw depth.

9.5 Scanning Limitations

Record all limitations due to weld configurations, obstructions, single side access restrictions, etc., in the remarks section on the SAFT/T-SAFT Ultrasonic Examination Data Report.

9.6 Flaw Evaluation

Reportable indications shall be evaluated by Ultrasonic Level III personnel prior to final report submittal.

9.7 Reporting Levels

All indications which meet or exceed the following conditions shall be reported to the project cognizant engineer.

- Surface crack depths exceeding 0.10 inches.

10.0 REPORTS

10.1 Calibration Reports

A SAFT/T-SAFT Ultrasonic Examination Calibration Sheet (Attachment 2) shall be prepared for each examination or series of examinations performed. This report shall include the materials and equipment used for the examination.

10.2 Sketch Sheets

A SAFT/T-SAFT Ultrasonic Examination Knuckle Sketch Sheet (Attachment 4) should be prepared for each examination or series of examinations performed. This report should include identity of scanning equipment and a sketch of the component or item examined, identifying scan locations, including dimensions, reference points, and grid locations, where applicable.

10.3 Ultrasonic Data Reports

A SAFT/T-SAFT Ultrasonic Examination Data Report (Attachment 3) shall be completed to document each examination. Each report shall be related to the applicable SAFT/T-SAFT Ultrasonic Examination Calibration Sheet(s).

10.4 Final Reports

Final reports are to be distributed and maintained in accordance with the applicable contract.

11.0 ATTACHMENTS

11.1 Attachment 1: Examination Parameters of the Knuckle Region

11.2 Attachment 2: SAFT/T-SAFT Ultrasonic Examination Calibration Sheet

11.3 Attachment 3: SAFT/T-SAFT Ultrasonic Examination Data Report

11.4 Attachment 4: Knuckle Sketch Sheet

COGEMA ENGINEERING

COGEMA-SVUT-INS-007.5, Rev. 0
UNCONTROLLED COPY

ULTRASONIC EXAMINATION OF THE KNUCKLE REGION

ATTACHMENT 1: EXAMINATION PARAMETERS OF THE KNUCKLE REGION

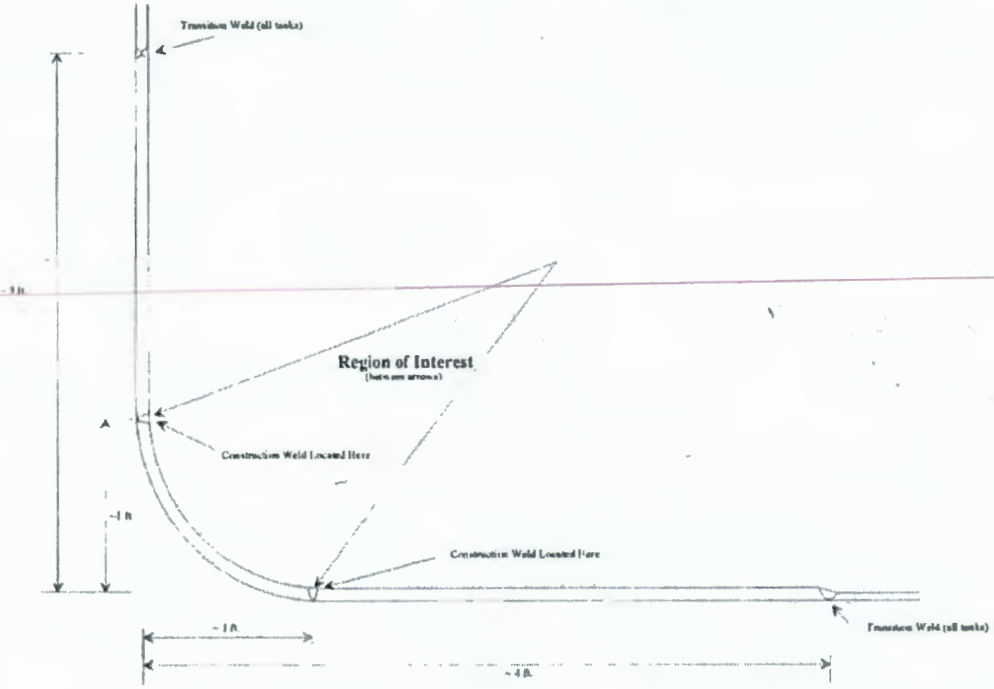

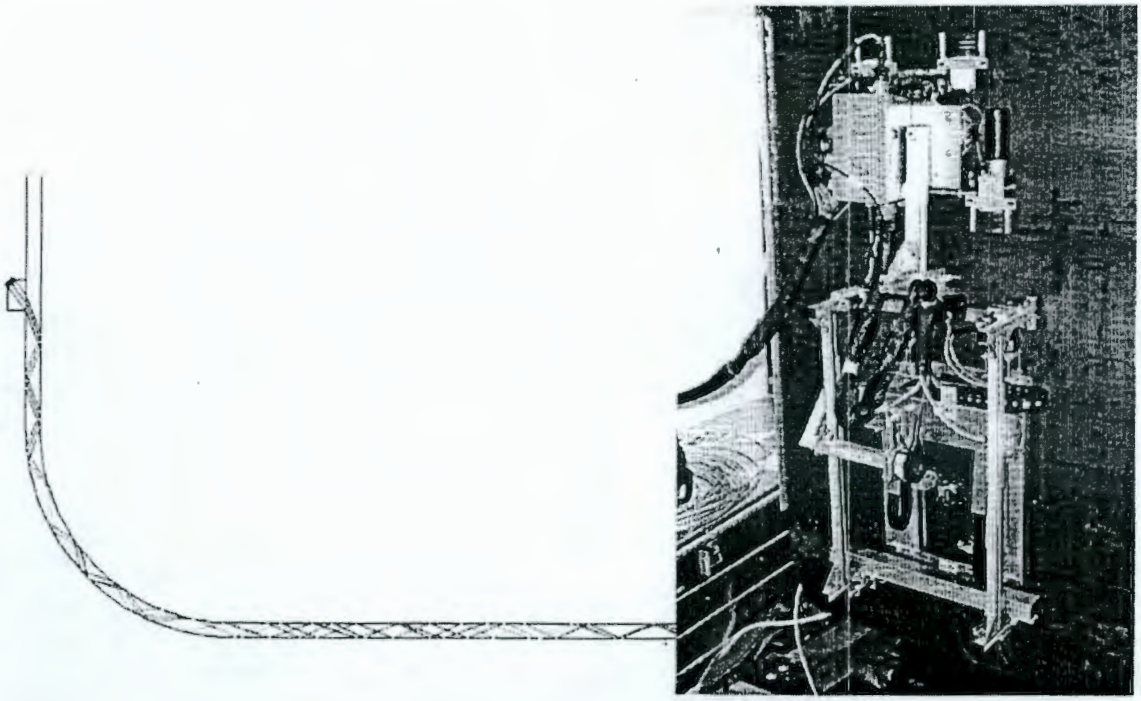

COGEMA ENGINEERING

COGEMA-SVUT-INS-007.5, Rev. 0
UNCONTROLLED COPY

ULTRASONIC EXAMINATION OF THE KNUCKLE REGION

ATTACHMENT 2: SAFT/T-SAFT ULTRASONIC EXAMINATION CALIBRATION SHEET

10/02	**SAFT/T-SAFT ULTRASONIC CALIBRATION SHEET**		
LOCATION	SYSTEM	CALIBRATION BLOCK	
PROCEDURE	REV	THICKNESS	MATERIAL
UT SYSTEM	SERIAL #	REFERENCE BLOCK	
SOFTWARE VERSION	REV	THICKNESS	MATERIAL
LINEARITY DUE DATE		REFERENCE BLOCK TEMP °F	PYRO SN.
SCANNER TYPE	SERIAL #	COUPLANT	BATCH #
SCANNER CABLE		CABLE LENGTH	CABLE #
SIGNAL CABLE		CABLE LENGTH	CABLE #

TRANSDUCER INFORMATION

TRANSDUCER #	TRANSDUCER MAKE	MODEL	FREQ	SIZE	SERIAL #	WEDGE TYPE	ANGLE
X1							
X2							

CALIBRATION CHECKS

DATE	CAL IN	CAL OUT	END OF BLOCK	NOTCH	DIFF	AMPLITUDE	DIFF	FILE NAME

REMARKS

EXAMINER	EXAMINER	REVIEWER	PAGE
LEVEL ____ DATE ____	LEVEL ____ DATE ____	LEVEL ____ DATE ____	____ OF ____

COGEMA ENGINEERING

COGEMA-SVUT-INS-007.5, Rev. 0
UNCONTROLLED COPY

ULTRASONIC EXAMINATION OF THE KNUCKLE REGION

ATTACHMENT 3: SAFT/T-SAFT ULTRASONIC EXAMINATION DATA REPORT

10/02	**SAFT/T-SAFT ULTRASONIC DATA REPORT**			
LOCATION	SYSTEM	EXAM START	EXAM END	JOB#
COMPONENT ID		EXAMINATION SURFACE ☐ OD ☐ ID		
CONFIGURATION			TEMP	
CIRCUMFERENCE/TOTAL LENGTH EXAMINED				
PROCEDURE	REV	MATERIAL TYPE	NOM. THICKNESS	
FILE NAME		TRANSDUCERS (2)	WEDGES	
Y (CIRCUMFERENCE) START POSITION		T-SAFT FILE NAME		

T-SAFT INFORMATION

T-SAFT FILE NO.	Y START	Y STOP	X POSITION	LENGTH	DEPTH	SCANNER X POSITION

REMARKS

EXAMINER	ANALYST	REVIEWER	PAGE
LEVEL ____ DATE ____	LEVEL ____ DATE ____	LEVEL ____ DATE ____	OF ____

COGEMA ENGINEERING

COGEMA-SVUT-INS-007.5, Rev. 0
UNCONTROLLED COPY

ULTRASONIC EXAMINATION OF THE KNUCKLE REGION

ATTACHMENT 4: KNUCKLE SKETCH SHEET

Tank _____

Riser #_____

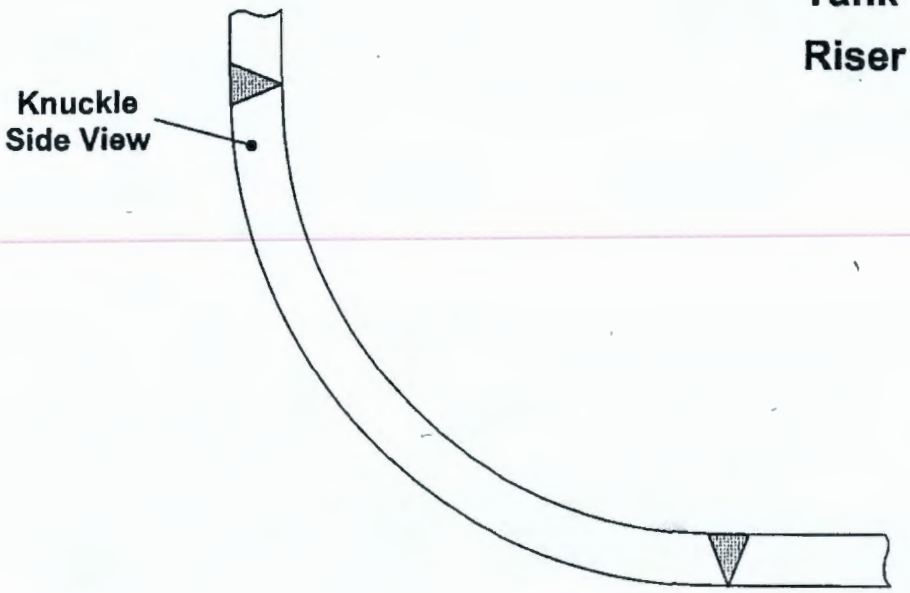

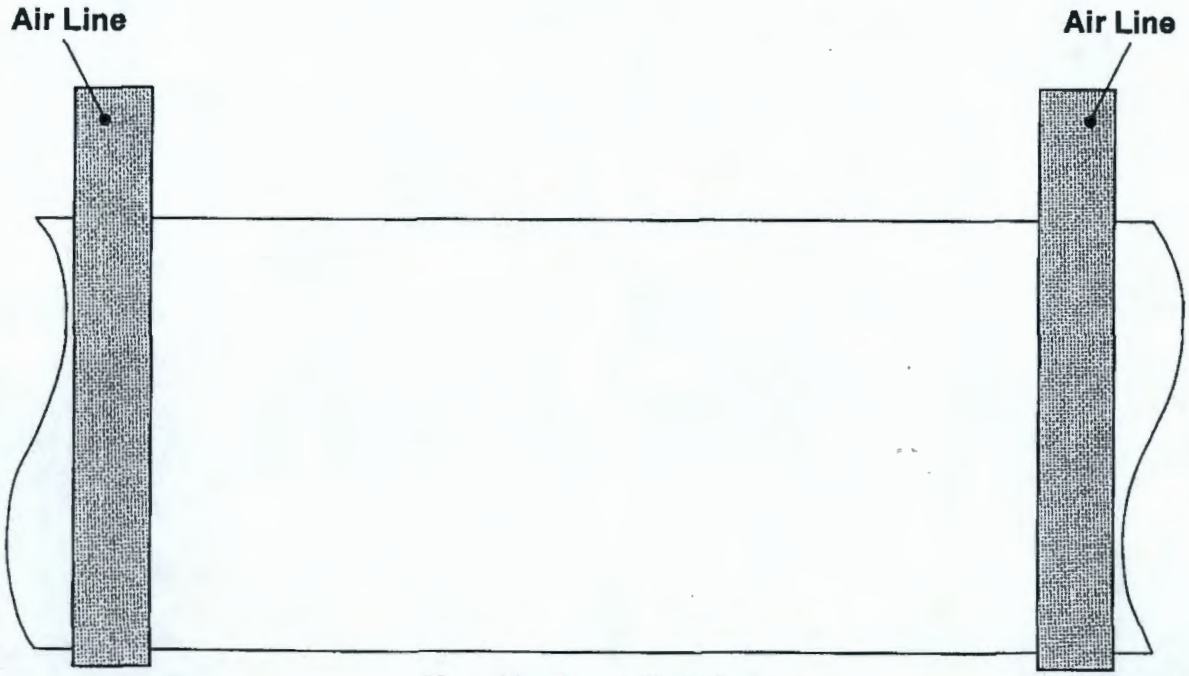

Knuckle Front Flat View

ATTACHMENT 3

COGEMA "AUTOMATED ULTRASONIC THICKNESS DATA REPORT SHEETS"

This page intentionally left blank.

ATTACHMENT 3

COGEMA "AUTOMATED ULTRASONIC THICKNESS DATA REPORT SHEETS"

4/00

AUTOMATED ULTRASONIC THICKNESS DATA REPORT

Riser # 31

LOCATION: 200 EAST Tank Farm	SYSTEM: PSP-4	EXAM START: 10/30/02 0810	EXAM END: 1619	JOB #: 03-41
COMPONENT ID: 101-AP		EXAMINATION SURFACE: ☒ OD ☐ ID ☐ PAINTED		NOM. THICKNESS: .500"
CONFIGURATION: TO Plate		CALIBRATED RANGE: .3" – 1.0"		TEMP: Amb. °F
CIRCUMFERENCE/TOTAL LENGTH EXAMINED: 87.9"		REF. LEVEL CORRECTION (TRANS. CORR): Ø DB		
PROCEDURE: COGEMA-SVUT-INS-007.3	REV: 1	MATERIAL TYPE: ☐ SS ☒ CS OTHER		CONDITION
FILE NAME/ITEM#: VERT. WALL / PLATE 1		TRANSDUCER: ☒ DUAL ☐ SGL ☒ 00EG ☐ ANGLE		
X_0 REF. POINT (L_0): 1" Above Horz. Weld *	Y_0 REF. POINT (W_0): ℄ of 24" Riser	SCAN WIDTH: 15"		

PART # / INDICATION	X START	X STOP	Y START	Y STOP	AVE. THK.	MIN. THK. R. LIG.	AREA REPORTABLE	MAX. THK.
0-12					.510"	.501"		.525"
12-24					.512"	.507"		.520"
24-36					.515"	.509"		.525"
36-48					.516"	.507"		.525"
48-60					.518"	.509"		.530"
60-72					.520"	.510"		.530"
72-84					.520"	.511"		.530"
84-87.9					.520"	.509"		.530"
SUMMARY								

REMARKS

*Started @ bottom of Plate 1 and worked up due to Tape and paper covering dome.

Examiner	Analyst	Reviewer	Page
W D Rudy	Wesley A Nelson	(N1)	
Level II Date 10/30/02	Level II Date 1/16/03	Level ___ Date ___	___ of ___

P-Scan Limited

(N1) See attached Letter From J. B. Elder

4/00

ULTRASONIC P-SCAN DATA REPORT

Riser # 31

LOCATION: 200 EAST TANK Farm	SYSTEM: PSP-4	EXAM START: 10/30/02 0820	EXAM END: 1632	JOB #: 03-41
COMPONENT ID: 101-AP		EXAMINATION SURFACE: ☒ OD ☐ ID ☐ PAINTED		CONDITION:
CONFIGURATION: TO Plate		CALIBRATED RANGE: 0" TO 1.414"		TEMP: Amb °F
CIRCUMFERENCE/TOTAL LENGTH EXAMINED: 87.8"		REF. LEVEL CORRECTION (TRANS. CORR): Ø DB		
PROCEDURE: COGEMA-SVUT-INS-007.3	REV: 1	MATERIAL TYPE: ☐ SS ☒ CS OTHER Nom. THK .500"		
FILE NAME/ITEM#: VERT. WALL/PLATE 1		TRANSDUCER: ☐ DUAL ☒ SGL ☐ 00DEG ☐ ANGLE 45°		
X_o REF. POINT (L_o): 1" Above Horz Weld*	Y_o REF. POINT (W_o): ℄ of 24" Riser	SCAN WIDTH: 15"		

SIZING METHOD	ANGLE	REFERENCE CAL. SHEET	SET-UP
1 45/60 DEGREE SHEAR			
2 AATT			
3 RATT			
4 DUAL 0 DEGREE			

INDICATION INFORMATION

IND	METHOD	WELD SIDE	DEPTH R. LIG.	MAX AMP	X1	LENGTH	X2	Y1	WIDTH	Y2	INDICATION TYPE

REMARKS
NO CRACK Like Indications.

*Started @ bottom of Plate 1 and worked up due To Tape + Paper on dome.

Examiner	Analyst	Reviewer	Page
W D Hurdy	Nicole A Nelson	(WI)	
Level II Date 10/30/02	Level II Date 11/14/03	Level ___ Date ___	___ of ___
P-Scan Limited			

(WI) see Attached Letter From J.B. Elder

4/00

AUTOMATED ULTRASONIC THICKNESS DATA REPORT

Riser #31

LOCATION: 200 EAST TANK FARM	SYSTEM: PSP-4	EXAM START: 11/4/02 0850	EXAM END: 1545	JOB #: 03-41
COMPONENT ID: 101-AP		EXAMINATION SURFACE: ☒ OD ☐ ID ☐ PAINTED		NOM. THICKNESS: .500"
CONFIGURATION: TO Plate		CALIBRATED RANGE: .3" TO 1.0"		TEMP: Amb. °F
CIRCUMFERENCE/TOTAL LENGTH EXAMINED: 89.7"		REF. LEVEL CORRECTION (TRANS. CORR): Ø DB		
PROCEDURE: COGEMA-SVUT-INS-007.3	REV: 1	MATERIAL TYPE: ☐ SS ☒ CS OTHER		CONDITION
FILE NAME/ITEM#: VERT. WALL / PLATE 2		TRANSDUCER: ☒ DUAL ☐ SGL ☒ 0DEG ☐ ANGLE		
X_0 REF. POINT (Lo): 1" below AOR2 weld	Y_0 REF. POINT (Wo): ℄ of 24" Riser	SCAN WIDTH: 15"		

PART #/ INDICATION	X START	X STOP	Y START	Y STOP	AVE. THK.	MIN. THK. R. LIG.	AREA REPORTABLE	MAX. THK.
0-12					.516"	.508"		.530"
12-24					.530"	.512"		.530"
24-36					.524"	.515"		.530"
36-48					.524"	.515"		.530"
48-60					.525"	.504"		.530"
60-72					.524"	.514"		.530"
72-84					.520"	.510"		.530"
84-89.7					.517"	.501"		.530"
SUMMARY								

REMARKS

Examiner	Analyst	Reviewer	Page
W.D. Purdy	Weslen D. Nel	(NI)	
Level II Date 11/4/02	Level WS Date 1/16/03	Level ___ Date ___	___ of ___
P-Scan Limited			

(NI) See Attached Letter From J.B. Elder

4/00

ULTRASONIC P-SCAN DATA REPORT

Riser #31

LOCATION: 200 EAST TANK FARM	SYSTEM: PSP-4	EXAM START: 11/4/02 0900	EXAM END: 1555	JOB #: 03-4
COMPONENT ID: 101-AP		EXAMINATION SURFACE: ☒ OD ☐ ID ☐ PAINTED		CONDITION:
CONFIGURATION: TO Plate		CALIBRATED RANGE: 0" TO 1.414"		TEMP: Amb °F
CIRCUMFERENCE/TOTAL LENGTH EXAMINED: 89.6"		REF. LEVEL CORRECTION (TRANS. CORR): Ø DB		
PROCEDURE: COGEMA-SVUT-INS-007.3	REV: 1	MATERIAL TYPE: ☐ SS ☒ CS OTHER Nom. THK .500"		
FILE NAME/ITEM#: VERT. WALL / PLATE 2		TRANSDUCER: ☐ DUAL ☒ SGL ☐ 00EG ☐ ANGLE 45		
X_0 REF. POINT (L_0): 1" below Horz. Weld	Y_0 REF. POINT (W_0): ℄ of 24" Riser	SCAN WIDTH: 15"		

	SIZING METHOD	ANGLE	REFERENCE CAL. SHEET	SET-UP
1	45/60 DEGREE SHEAR			
2	AATT			
3	RATT			
4	DUAL 0 DEGREE			

INDICATION INFORMATION

IND	METHOD	WELD SIDE	DEPTH R. LIG.	MAX AMP	X1	LENGTH	X2	Y1	WIDTH	Y2	INDICATION TYPE

REMARKS
NO Crack Like Indications.

Examiner	Analyst	Reviewer	Page
WD Purdy	[signature]	(NI)	
Level II Date 11/4/02	Level III Date 1/14/03	Level ___ Date ___	___ of ___

PScan Limited

(NI) See Attached Letter From J.B. Elder

4/00

AUTOMATED ULTRASONIC THICKNESS DATA REPORT

Riser # 31

LOCATION: 200 EAST TANK FARM	SYSTEM: PSP-4	EXAM START: 11/6/02 0815	EXAM END: 1247	JOB #: 03-41
COMPONENT ID: 101-AP		EXAMINATION SURFACE: ☒ OD ☐ ID ☐ PAINTED		NOM. THICKNESS: .5625"
CONFIGURATION: TO Plate		CALIBRATED RANGE: .3" TO 1.0"		TEMP: Amb °F
CIRCUMFERENCE/TOTAL LENGTH EXAMINED: 89.7"		REF. LEVEL CORRECTION (TRANS. CORR): Ø DB		
PROCEDURE: COGEMA-SVUT-IMS-007.3	REV: 1	MATERIAL TYPE: ☐ SS ☒ CS OTHER		CONDITION
FILE NAME/ITEM#: VERT. WALL/PLATE 3		TRANSDUCER: ☒ DUAL ☐ SGL ☒ 0DEG ☐ ANGLE		
X_0 REF. POINT (L_0): 1" below HORZ. Weld	Y_0 REF. POINT (W_0): ℄ of 24" Riser	SCAN WIDTH: 15"		

PART #/ INDICATION	X START	X STOP	Y START	Y STOP	AVE. THK.	MIN. THK. R. LIG.	AREA REPORTABLE	MAX. THK.
0-12					.585"	.563"		.590"
12-24					.585"	.567"		.595"
24-36					.585"	.570"		.595"
36-48					.585"	.573"		.595"
48-60					.585"	.558"		.595"
60-72					.585"	.571"		.595"
72-84					.585"	.539"		.595"
84-89.7					.580"	.563"		.590"
SUMMARY								

REMARKS

Examiner	Analyst	Reviewer	Page
W D Pendy (N1) Level II Date 11/6/02 P-Scan Limited	Level II Date 1/16/03	(N1) Level ___ Date ___	___ of ___

(N1) See Attached Letter From. J.B. Elder

4/00

ULTRASONIC P-SCAN DATA REPORT

Riser # 31

LOCATION: 200 EAST TANK FARM	SYSTEM: PSP-4	EXAM START: 11/6/02 1330	EXAM END: 1945	JOB #: 03-41
COMPONENT ID: 101-AP		EXAMINATION SURFACE: ☒ OD ☐ ID ☐ PAINTED		CONDITION:
CONFIGURATION:	TO: PLATE	CALIBRATED RANGE: 0" TO 159"		TEMP: AMB °F
CIRCUMFERENCE/TOTAL LENGTH EXAMINED: 89.5"		REF. LEVEL CORRECTION (TRANS. CORR): 8 DB		
PROCEDURE: CDGEMA-SVUT-INS 007.3	REV: 1	MATERIAL TYPE: ☐ SS ☒ CS OTHER Nom. THK .5625"		
FILE NAME/ITEM#: VERT. WALL / PLATE 3		TRANSDUCER: ☐ DUAL ☒ SGL ☐ 0DEG ☒ ANGLE 45°		
X_0 REF. POINT (L_0): 1" below Horz. weld	Y_0 REF. POINT (W_0): ℄ of 24" Riser	SCAN WIDTH: 15"		

	SIZING METHOD	ANGLE	REFERENCE CAL. SHEET	SET-UP
1	45/60 DEGREE SHEAR			
2	AATT			
3	RATT			
4	DUAL 0 DEGREE			

INDICATION INFORMATION

IND	METHOD	WELD SIDE	DEPTH R. LIG.	MAX AMP	X1	LENGTH	X2	Y1	WIDTH	Y2	INDICATION TYPE

REMARKS
NO CRACK LIKE INDICATIONS

Examiner	Analyst	Reviewer	Page
[signature] Level WS Date 11/6/02	[signature] Level WS Date 1/26/03	(N1) Level ___ Date ___	___ of ___

(N1) See Attached Letter From J.B Elder

4/00

AUTOMATED ULTRASONIC THICKNESS DATA REPORT

Riser #31

LOCATION: 200 EAST TANK FARM	SYSTEM: PSP-4	EXAM START: 3/12/03 0958	EXAM END: 1845	JOB #: 03-41
COMPONENT ID: 101-AP		EXAMINATION SURFACE: ☒ OD ☐ ID ☐ PAINTED		NOM. THICKNESS: .750"
CONFIGURATION: PLATE	TO	CALIBRATED RANGE: .2" to 1.0"		TEMP: AMB °F
CIRCUMFERENCE/TOTAL LENGTH EXAMINED: 105.9"		REF. LEVEL CORRECTION (TRANS. CORR): 0 DB		
PROCEDURE: COGEMA-SVUT-INS-007.3	REV: 1	MATERIAL TYPE: ☐ SS ☒ CS OTHER ____		CONDITION:
FILE NAME/ITEM#: VERT. WALL/0/1st/PLATE4		TRANSDUCER: ☒ DUAL ☐ SGL ☒ 00EG ☐ ANGLE ____		
X_0 REF. POINT (L_0): 1" below Horz Weld	Y_0 REF. POINT (W_0): ℄ of 24" Riser	SCAN WIDTH: 15"		

PART # / INDICATION	X START	X STOP	Y START	Y STOP	AVE. THK.	MIN. THK. R. LIG.	AREA REPORTABLE	MAX. THK.
0-12					.759"	.742"		.765"
12-24					.762"	.756"		.770"
24-36					.762"	.756"		.770"
36-48					.762"	.758"		.770"
48-60					.761"	.757"		.770"
60-72					.761"	.756"		.770"
72-84					.760"	.755"		.770"
84-96					.759"	.746"		.770"
96-105.9					.755"	.746"		.765"
SUMMARY								

REMARKS

Examiner	Analyst	Reviewer	Page
Wesley D Neu	Wesley D Neu	(NI)	
Level III Date 3/12/03	Level III Date 4/17/03	Level ___ Date ___	___ of ___

(NI) See Attached Letter From J.B Elder

4/00

ULTRASONIC P-SCAN DATA REPORT

Riser # 31

LOCATION: 200 EAST TANK FARM	SYSTEM: PSP-4	EXAM START: 11/11/02 0720	EXAM END: 1525 / JOB #: 03-41
COMPONENT ID: 101-AP		EXAMINATION SURFACE: ☒ OD ☐ ID ☐ PAINTED	CONDITION
CONFIGURATION: PLATE	TO	CALIBRATED RANGE: 0" TO 2.12"	TEMP: AMB °F
CIRCUMFERENCE/TOTAL LENGTH EXAMINED: 104.7"		REF. LEVEL CORRECTION (TRANS. CORR): X DB	
PROCEDURE: CYGEMA-SVUT-INS-007.3	REV: 1	MATERIAL TYPE: ☐ SS ☒ CS OTHER NOM. THK .750"	
FILE NAME/ITEM#: VERT. WALL/ PLATE 4		TRANSDUCER: ☐ DUAL ☒ SGL ☐ 0DEG ☒ ANGLE 45°	
X_0 REF. POINT (L_0): 1" below HORZ. Weld	Y_0 REF. POINT (W_0): ℄ of 24" Riser	SCAN WIDTH: 15"	

	SIZING METHOD	ANGLE	REFERENCE CAL. SHEET	SET-UP
1	45/60 DEGREE SHEAR			
2	AATT			
3	RATT			
4	DUAL 0 DEGREE			

INDICATION INFORMATION

IND	METHOD	WELD SIDE	DEPTH R. LIG.	MAX AMP	X1	LENGTH	X2	Y1	WIDTH	Y2	INDICATION TYPE

REMARKS
NO CRACK LIKE INDICATIONS

Examiner	Analyst	Reviewer	Page
W. Drudy	[signature]	(AH)	
Level II Date 11/11/02	Level III Date 1/26/03	Level ___ Date ___	___ of ___
P-Scan Limited BP			

(AH) See Attached Letter From J.B. Elder

4100

AUTOMATED ULTRASONIC THICKNESS DATA REPORT

Riser #31

LOCATION: 200 EAST TANK FARM	SYSTEM: DSP-4	EXAM START: 0845 11/1/02 1322	EXAM END: 1322
JOB #: 03-41			
COMPONENT ID: 101-AP		EXAMINATION SURFACE: ☒ OD ☐ ID ☐ PAINTED	NOM. THICKNESS: .875"
CONFIGURATION: PLATE	TO	CALIBRATED RANGE: .3" TO 1.0"	TEMP: Amb °F
CIRCUMFERENCE/TOTAL LENGTH EXAMINED: 20.9"		REF. LEVEL CORRECTION (TRANS. CORR): Ø DB	
PROCEDURE: COGEMA-SVUT-INS-007.3	REV: 1	MATERIAL TYPE: ☐ SS ☐ CS OTHER ____	CONDITION
FILE NAME/ITEM#: VERT. WALL/PLAT5		TRANSDUCER: ☒ DUAL ☐ SGL ☒ 0DEG ☐ ANGLE ____	
X_0 REF. POINT (L_0): 1" below HORZ Weld	Y_0 REF. POINT (W_0): ℄ of 24" Riser	SCAN WIDTH: 15"	

PART # / INDICATION	X START	X STOP	Y START	Y STOP	AVE. THK.	MIN. THK. R. LIG.	AREA REPORTABLE	MAX. THK.
0 - 12					.875"	.865"		.900"
12 - 20.9					.875"	.860"		.900"
SUMMARY								

REMARKS

Examiner	Analyst	Reviewer	Page
W D Purdy	Wesley D Shu	(W1)	
Level II Date 11/1/02	Level III Date 1/20/03	Level ___ Date ___	___ of ___
P-Scan limited			

(W1) See Attached Letter From J. B. Elder

4/00

ULTRASONIC P-SCAN DATA REPORT

Riser #31

LOCATION: 200 EAST TANK FARM	SYSTEM: PSP-4	EXAM START: 11/1/02 0855	EXAM END: 1327	JOB #: 03-4
COMPONENT ID: 101-AP		EXAMINATION SURFACE: ☒ OD ☐ ID ☐ PAINTED		CONDITION:
CONFIGURATION: PLATE	TO:	CALIBRATED RANGE: 0" TO 2.5"		TEMP: AMB °F
CIRCUMFERENCE/TOTAL LENGTH EXAMINED: 20.9"		REF. LEVEL CORRECTION (TRANS CORR): Ø DB		
PROCEDURE:	REV:	MATERIAL TYPE: ☐ SS ☒ CS OTHER NOM. THK .875"		
FILE NAME/ITEM#: VERT. WALL / PLATE 5		TRANSDUCER: ☐ DUAL ☒ SGL ☐ DDEG ☒ ANGLE 45°		
X_0 REF. POINT (L_0): 1" below HORZ weld	Y_0 REF. POINT (W_0): ℄ of 24" Riser	SCAN WIDTH: 15"		

	SIZING METHOD	ANGLE	REFERENCE CAL. SHEET	SET-UP
1	45/60 DEGREE SHEAR			
2	AATT			
3	RATT			
4	DUAL 0 DEGREE			

INDICATION INFORMATION

IND	METHOD	WELD SIDE	DEPTH R. LIG.	MAX AMP	X1	LENGTH	X2	Y1	WIDTH	Y2	INDICATION TYPE

REMARKS
NO CRACK LIKE INDICATIONS

Examiner	Analyst	Reviewer	Page
W D Rudolf	Wesley A Nel	(W1)	
Level II Date 11/1/02	Level III Date 1/26/03	Level ___ Date ___	___ of ___
P-Scan Limited			

(W1) See Attached Letter From J.B. Elder BP

4/00

AUTOMATED ULTRASONIC THICKNESS DATA REPORT

Riser #31

LOCATION: 200 EAST TANK FARM	SYSTEM: PSP-4	EXAM START: 10/31/02 0815	EXAM END: 1545 / JOB #: 03-41
COMPONENT ID: 101-AP		EXAMINATION SURFACE: ☒ OD ☐ ID ☐ PAINTED	NOM. THICKNESS: .500"
CONFIGURATION: PLATE	TO	CALIBRATED RANGE: .3" TO 1.0"	TEMP: Amb °F
CIRCUMFERENCE/TOTAL LENGTH EXAMINED: 86.3"		REF. LEVEL CORRECTION (TRANS. CORR): Ø DB	
PROCEDURE: CDGEMA-SVUT-INS-007.3	REV: 1	MATERIAL TYPE: ☐ SS ☒ CS OTHER ____	CONDITION
FILE NAME/ITEM#: VERT WALL/2ND/PLATE/		TRANSDUCER: ☒ DUAL ☐ SGL ☒ 0DEG ☐ ANGLE ____	
X_0 REF. POINT (L_0): 1" Above Horz Weld *	Y_0 REF. POINT (W_0): 17" From ℄ of 1ST PASS TO 2ND PASS	SCAN WIDTH: 15"	

PART #/ INDICATION	X START	X STOP	Y START	Y STOP	AVE. THK.	MIN. THK. R. LIG.	AREA REPORTABLE	MAX. THK.
0-12					.515"	.492"		.525"
12-24					.515"	.511"		.525"
24-36					.520"	.512"		.525"
36-48					.520"	.515"		.530"
48-60					.520"	.511"		.530"
60-72					.526"	.509"		.525"
72-84					.526"	.511"		.525"
84-86.3					.515"	.502"		.525"
SUMMARY								

REMARKS

*Started @ bottom of Plate 1 and worked up due to Tape and paper covering Dome

Examiner	Analyst	Reviewer	Page
W D Hardy	Wesley D Nea	(NI)	
Level II Date 10/31/02	Level VTS Date 1/22/03	Level ___ Date ___	___ of ___

(NI) See Letter From J. B Elder

4/00

ULTRASONIC P-SCAN DATA REPORT

Riser #51

LOCATION: 200 EAST TANK FARM	SYSTEM: PSP-4	EXAM START: 10/31/02 0830	EXAM END: 1535	JOB #: 03-41
COMPONENT ID: 101-AP		EXAMINATION SURFACE: ☒ OD ☐ ID ☐ PAINTED		CONDITION:
CONFIGURATION: TO PLATE		CALIBRATED RANGE: 0" TO 1.414"		TEMP: AMB °F
CIRCUMFERENCE/TOTAL LENGTH EXAMINED: 86.2"		REF. LEVEL CORRECTION (TRANS. CORR): & DB		
PROCEDURE: COGEMA-SVUT-INS-0073	REV: 1	MATERIAL TYPE: ☐ SS ☒ CS OTHER Nom. THK .500"		
FILE NAME/ITEM#: VERT. WALL / 2ND / PLATE 1		TRANSDUCER: ☐ DUAL ☒ SGL ☐ 0DEG ☒ ANGLE 45°		
X_0 REF. POINT (L_0): 1" Above Horz Weld*	Y_0 REF. POINT (W_0): 17" From ℄ of 1st PASS To 2nd PASS	SCAN WIDTH: 15"		

	SIZING METHOD	ANGLE	REFERENCE CAL. SHEET	SET-UP
1	45/60 DEGREE SHEAR			
2	AATT			
3	RATT			
4	DUAL 0 DEGREE			

INDICATION INFORMATION

IND	METHOD	WELD SIDE	DEPTH R. LIG.	MAX AMP	X1	LENGTH	X2	Y1	WIDTH	Y2	INDICATION TYPE

REMARKS

No CRACK LIKE INDICATIONS

Started @ bottom of Plate 1 and worked up due to Tape and paper Covering Dome

Examiner	Analyst	Reviewer	Page
W D Purdy	Wesley A Rice	(W1)	
Level II Date 10/31/02	Level III Date 1/26/03	Level ___ Date ___	___ of ___
P-Scan Limited			

(W1) See Attached Letter From J. B Elder

4/00

AUTOMATED ULTRASONIC THICKNESS DATA REPORT

Riser # 31

LOCATION: 200 EAST TANK FARM	SYSTEM: PSP-4	EXAM START: 11/12/02 0725	EXAM END: 1515	JOB #: 03-41
COMPONENT ID: 101-AP		EXAMINATION SURFACE: ☐ OD ☐ ID ☐ PAINTED		NOM. THICKNESS: .500"
CONFIGURATION: PLATE	TO	CALIBRATED RANGE: .3" TO 1.0"		TEMP: Amb °F
CIRCUMFERENCE/TOTAL LENGTH EXAMINED: 21.4"		REF. LEVEL CORRECTION (TRANS. CORR): Ø DB		
PROCEDURE: COGEMA-SVUT-INS-007.3	REV: 1	MATERIAL TYPE: ☐ SS ☒ CS OTHER ____		CONDITION
FILE NAME/ITEM#: VERT. WALL / 2ND / PLATE2		TRANSDUCER: ☒ DUAL ☐ SGL ☒ 0DEG ☐ ANGLE ____		
X_0 REF. POINT (L_0): 1" below HORZ. Weld	Y_0 REF. POINT (W_0): 17" From ℄ of 1st PASS TO 2nd PASS	SCAN WIDTH: 1.5"		

PART # / INDICATION	X START	X STOP	Y START	Y STOP	AVE. THK.	MIN. THK. R. LIG.	AREA REPORTABLE	MAX. THK.
0-12					.520"	.501"		.530"
12-21.4					.520"	.517"		.530"
SUMMARY								

REMARKS

Examiner	Analyst	Reviewer	Page
W D Purdy	[signature]	(U1)	
Level II Date 11/12/02	Level ___ Date 1/22/03	Level ___ Date ___	___ of ___
P-Scan Limited			

(U1) See Attached Letter From J. B Elder

4/00

ULTRASONIC P-SCAN DATA REPORT

Riser # 31

LOCATION: 200 EAST TANK Farm	SYSTEM: PSP-4	EXAM START: 11/12/02 0740	EXAM END: 1527	JOB #: 03-41
COMPONENT ID: 101-AP		EXAMINATION SURFACE: ☒ OD ☐ ID ☐ PAINTED		CONDITION:
CONFIGURATION: PLATE	TO	CALIBRATED RANGE: 0" TO 1.414"		TEMP: AMB °F
CIRCUMFERENCE/TOTAL LENGTH EXAMINED: 21.3		REF. LEVEL CORRECTION (TRANS. CORR): 0 DB		
PROCEDURE: CDGEMA-SVUT-INS-0073	REV: 1	MATERIAL TYPE: ☐ SS ☑ CS OTHER NOM THK .500"		
FILE NAME/ITEM#: VERT. WALL/2ND/PLATE 2		TRANSDUCER: ☐ DUAL ☒ SGL ☐ 00EG ☒ ANGLE 45°		
X_0 REF. POINT (L_0): 1" below HAZ Weld	Y_0 REF. POINT (W_0): 11" From ℄ of 1st PASS To ℄ 2nd PASS	SCAN WIDTH: 15"		

	SIZING METHOD	ANGLE	REFERENCE CAL. SHEET	SET-UP
1	45/60 DEGREE SHEAR			
2	AATT			
3	RATT			
4	DUAL 0 DEGREE			

INDICATION INFORMATION

IND	METHOD	WELD SIDE	DEPTH R. LIG.	MAX AMP	X1	LENGTH	X2	Y1	WIDTH	Y2	INDICATION TYPE

REMARKS
NO CRACK LIKE INDICATIONS

Examiner	Analyst	Reviewer	Page
W D Purdy	Wesley D Nu	(iii)	
Level II Date 11/12/02	Level III Date 1/26/03	Level ___ Date ___	___ of ___

P-Scan Limited
BP

(iii) See Attached Letter From J.B Elder

4/00

AUTOMATED ULTRASONIC THICKNESS DATA REPORT

Riser # 31

LOCATION: 200 EAST TANK FARM	SYSTEM: PSP-4	EXAM START: 11/12/02 0725	EXAM END: 1515	JOB #: 03-41
COMPONENT ID: 101-AP		EXAMINATION SURFACE: ☒ OD ☐ ID ☐ PAINTED	NOM. THICKNESS: .500"
CONFIGURATION: PLATE TO		CALIBRATED RANGE: .3" TO 1.0"	TEMP: Amb °F
CIRCUMFERENCE/TOTAL LENGTH EXAMINED: 68.3"		REF. LEVEL CORRECTION (TRANS. CORR): Ø DB	
PROCEDURE: CG-EMA-SVUT-INS-007.3	REV: 1	MATERIAL TYPE: ☐ SS ☒ CS OTHER ____	CONDITION
FILE NAME/ITEM#: VERT. WALL/2ND/PLATE 2A		TRANSDUCER: ☒ DUAL ☐ SGL ☒ 00EG ☐ ANGLE ____	
X_0 REF. POINT (L_0): 1" below Horz weld	Y_0 REF. POINT (W_0): 1" From ℄ of 1st PASS To ℄ of 2nd	SCAN WIDTH: 15"	

PART #/ INDICATION	X START	X STOP	Y START	Y STOP	AVE. THK.	MIN. THK. R. LIG.	AREA REPORTABLE	MAX. THK.
0-12					.520"	.511"		.530"
12-24					.520"	.505"		.530"
24-36					.520"	.500"		.530"
36-48					.520"	.517"		.530"
48-60					.520"	.516"		.530"
60-68.3					.520"	.498"		.530"
SUMMARY								

REMARKS

Started @ 21.25" of File Vert Wall/2nd/Plate 2

Examiner	Analyst	Reviewer	Page
W D Purdy	Wesley D Ray	(NI)	
Level II Date 11/12/02	Level VII Date 1/22/03	Level ___ Date ___	___ of ___
P-Scan Limited			

(NI) See Attached Letter From J. B. Elder

4/00

ULTRASONIC P-SCAN DATA REPORT

Riser # 31

LOCATION: 200 EAST TANK Farm	SYSTEM: PSP-4	EXAM START: 11/12/02 0740	EXAM END: 1322	JOB #: 03-41
COMPONENT ID: 101-AP		EXAMINATION SURFACE: ☒ OD ☐ ID ☐ PAINTED		CONDITION:
CONFIGURATION: PLATE	TO	CALIBRATED RANGE: 0" TO 1.414"		TEMP: AMB °F
CIRCUMFERENCE/TOTAL LENGTH EXAMINED: 68.2"		REF. LEVEL CORRECTION (TRANS. CORR): Ø DB		
PROCEDURE: COGEMA-SVUT-INS-007.3	REV: 1	MATERIAL TYPE: ☐ SS ☒ CS OTHER Nom. THK .500"		
FILE NAME/ITEM#: VERT. WALL/2ND/PLATE 2 A		TRANSDUCER: ☐ DUAL ☒ SGL ☐ 00EG ☒ ANGLE 45°		
X_0 REF. POINT (L_0): 1" below HORZ. Weld	Y_0 REF. POINT (W_0): 1" From ℄ of 1st Pass To ℄ 2nd Pass	SCAN WIDTH: 15"		

	SIZING METHOD	ANGLE	REFERENCE CAL. SHEET	SET-UP
1	45/60 DEGREE SHEAR			
2	AATT			
3	RATT			
4	DUAL 0 DEGREE			

INDICATION INFORMATION

IND	METHOD	WELD SIDE	DEPTH R. LIG.	MAX AMP	X1	LENGTH	X2	Y1	WIDTH	Y2	INDICATION TYPE

REMARKS

NO CRACK LIKE INDICATIONS

Started @ 21.25" of File Vert Wall/2nd/Plate 2

Examiner	Analyst	Reviewer	Page
W D Purdy	[signature]	(WD)	
Level II Date 11/12/02	Level III Date 1/26/03	Level ___ Date ___	___ of ___

P-Scan Limited

(WD) See Attached Letter From J. B. Elder

4/00

AUTOMATED ULTRASONIC THICKNESS DATA REPORT

Riser # 31

LOCATION: 200 EAST TANK FARM	SYSTEM: PSP-4	EXAM START: 11/2/02 0813	EXAM END: 1500	JOB #: 03-41
COMPONENT ID: 101-AP		EXAMINATION SURFACE: ☒ OD ☐ ID ☐ PAINTED	NOM. THICKNESS: .5625"
CONFIGURATION: PLATE TO		CALIBRATED RANGE: 0" TO 1.0"	TEMP: AMB °F
CIRCUMFERENCE/TOTAL LENGTH EXAMINED: 88.6"		REF. LEVEL CORRECTION (TRANS. CORR): Ø DB	
PROCEDURE: CGEMA-SVUT-INS-007.3	REV: 1	MATERIAL TYPE: ☐ SS ☒ CS OTHER ____	CONDITION
FILE NAME/ITEM#: VERT. WALL/2ND/PLATE 3		TRANSDUCER: ☒ DUAL ☐ SGL ☒ 0DEG ☐ ANGLE ____	
X_0 REF. POINT (L_0): 1" below Horz Weld	Y_0 REF. POINT (W_0): 17" From ℄ of 1st Pass To ℄ 2nd Pass	SCAN WIDTH: 1.5"	

PART #/ INDICATION	X START	X STOP	Y START	Y STOP	AVE. THK.	MIN. THK. R. LIG.	AREA REPORTABLE	MAX. THK.
0-12					.585"	.564"		.595"
12-24					.585"	.558"		.595"
24-36					.585"	.571"		.600"
36-48					.590"	.574"		.600"
48-60					.590"	.574"		.600"
60-72					.592"	.574"		.600"
72-84					.590"	.569"		.600"
84-88.6					.585"	.559"		.595"
SUMMARY								

REMARKS

Examiner	Analyst	Reviewer	Page
W D Purdy	Wesley A Dee	(W1)	
Level II Date 11/7/02	Level III Date 1/22/03	Level ___ Date ___	___ of ___

(W1) See Attached Letter From J.B Elder

4/00

ULTRASONIC P-SCAN DATA REPORT

Riser #31

LOCATION: 200 EAST TANK FARM	SYSTEM: PSP-4	EXAM START: 11/7/02 0840	EXAM END: 1510	JOB #: 03-41
COMPONENT ID: 101-AP		EXAMINATION SURFACE: ☒ OD ☐ ID ☐ PAINTED		CONDITION:
CONFIGURATION: TO PLATE		CALIBRATED RANGE: 0" TO 1.59"		TEMP: AMB °F
CIRCUMFERENCE/TOTAL LENGTH EXAMINED: 88.6"		REF. LEVEL CORRECTION (TRANS. CORR): 0 DB		
PROCEDURE: COGEMA-SVUT-INS-007.3	REV: 1	MATERIAL TYPE: ☐ SS ☒ CS OTHER NOM THK .5625"		
FILE NAME/ITEM#: VERT. WELD (2ND) PLATE 3		TRANSDUCER: ☐ DUAL ☒ SGL ☐ 0DEG ☒ ANGLE 45°		
X_0 REF. POINT (L_0): 1" below Horz Weld	Y_0 REF. POINT (W_0): 17" From ℄ of 1st Pass To ℄ 2nd Pass	SCAN WIDTH: 15"		

	SIZING METHOD	ANGLE	REFERENCE CAL. SHEET	SET-UP
1	45/60 DEGREE SHEAR			
2	AATT			
3	RATT			
4	DUAL 0 DEGREE			

INDICATION INFORMATION

IND	METHOD	WELD SIDE	DEPTH R. LIG.	MAX AMP	X1	LENGTH	X2	Y1	WIDTH	Y2	INDICATION TYPE

REMARKS
NO CRACK LIKE INDICATIONS

Examiner	Analyst	Reviewer	Page
W.D. Purdy	Wesley A. Dee	(W1)	
Level II Date 11/7/02	Level II Date 1/26/03	Level ___ Date ___	___ of ___
PSCAN Limited BO			

(W1) See Attached Letter From J.B. Elder

4/00

AUTOMATED ULTRASONIC THICKNESS DATA REPORT

Riser # 31

LOCATION: 200 EAST TANK FARM	SYSTEM: PSP-4	EXAM START: 11/13/02 0710	EXAM END: 1730	JOB #: 03-41
COMPONENT ID: 101-AP		EXAMINATION SURFACE: ☒ OD ☐ ID ☐ PAINTED		NOM. THICKNESS: .750"
CONFIGURATION: PLATE	TO	CALIBRATED RANGE: .3" TO 1.0"		TEMP: Amb °F
CIRCUMFERENCE/TOTAL LENGTH EXAMINED: 104.6"		REF. LEVEL CORRECTION (TRANS. CORR): 0 DB		
PROCEDURE: COGEMA-SVUT-INS-007.3	REV: 1	MATERIAL TYPE: ☐ SS ☒ CS OTHER ____		CONDITION
FILE NAME/ITEM#: VERT. WALL / 240 / PLATE 4		TRANSDUCER: ☒ DUAL ☐ SGL ☒ 0DEG ☐ ANGLE ____		
X_0 REF. POINT (L_0): 1" below HORZ weld	Y_0 REF. POINT (W_0): 17" From ℄ of 1st Pass To ℄ of 2nd Pass	SCAN WIDTH: 15"		

PART #/ INDICATION	X START	X STOP	Y START	Y STOP	AVE. THK.	MIN. THK. R. LIG.	AREA REPORTABLE	MAX. THK.
0-12					.760"	.745"		.770"
12-24					.760"	.754"		.770"
24-36					.765"	.755"		.775"
36-48					.765"	.751"		.775"
48-60					.765"	.759"		.775"
60-72					.765"	.757"		.775"
72-84					.765"	.750"		.775"
84-96					.762"	.741"		.770"
96-104.6					.760"	.748"		.770"
SUMMARY								

REMARKS

Examiner	Analyst	Reviewer	Page
W D Purdy	Wesley H Nor	(NI)	
Level II Date 11/13/02	Level WS Date 1/22/03	Level ___ Date ___	___ of ___
P-Scan Limited			

(NI) See Attached Letter From J. B Elder

4/00

ULTRASONIC P-SCAN DATA REPORT

Riser #31

LOCATION: 200 EAST TANK FARM	SYSTEM: PSR-4	EXAM START: 11/13/02 0710	EXAM END: 1730	JOB #: 03-41
COMPONENT ID: 101-AP		EXAMINATION SURFACE: ☒ OD ☐ ID ☐ PAINTED	CONDITION:
CONFIGURATION: PLATE		CALIBRATED RANGE: 0" TO 2.12"	TEMP: AMB °F
CIRCUMFERENCE/TOTAL LENGTH EXAMINED: 104.5"		REF. LEVEL CORRECTION (TRANS. CORR): 0 DB	
PROCEDURE: COGEMA-SVUT-INS-007.3	REV: 1	MATERIAL TYPE: ☐ SS ☒ CS OTHER NOM THK .750"	
FILE NAME/ITEM#: VERT. WALL 12ND PLATE 4		TRANSDUCER: ☐ DUAL ☒ SGL ☐ 0DEG ☒ ANGLE 45°	
X_0 REF. POINT (L_0): 1" below HORZ weld	Y_0 REF. POINT (W_0): 17" From CL of 1st PASS TO CL of 2ND PASS	SCAN WIDTH: 15"	

	SIZING METHOD	ANGLE	REFERENCE CAL. SHEET	SET-UP
1	45/60 DEGREE SHEAR			
2	AATT			
3	RATT			
4	DUAL 0 DEGREE			

INDICATION INFORMATION

IND	METHOD	WELD SIDE	DEPTH R. LIG.	MAX AMP	X1	LENGTH	X2	Y1	WIDTH	Y2	INDICATION TYPE

REMARKS

NO CRACK LEVEL INDICATIONS

Examiner	Analyst	Reviewer	Page
W D Purdy	Wesley H Nel	(VI)	
Level VI Date 11/13/02	Level VI Date 11/26/03	Level ___ Date ___	___ of ___
P-Scan Limited			

(VI) See BP Attached Letter From J. B. Elder

4/00

AUTOMATED ULTRASONIC THICKNESS DATA REPORT

Riser # 31

LOCATION: 200 EAST Tank Farm	SYSTEM: PSP-4	EXAM START: 11/13/02 1850	EXAM END: 2105	JOB #: 03-41
COMPONENT ID: 101-AP		EXAMINATION SURFACE: ☒ OD ☐ ID ☐ PAINTED	NOM. THICKNESS: .875"
CONFIGURATION: PLATE	TO	CALIBRATED RANGE: .3" TO 1.0"	TEMP: Amb °F
CIRCUMFERENCE/TOTAL LENGTH EXAMINED: 21.2"		REF. LEVEL CORRECTION (TRANS. CORR): Ø DB	
PROCEDURE: COGEMA-SVUT-INS-007.3	REV: 1	MATERIAL TYPE: ☐ SS ☒ CS OTHER ____	CONDITION
FILE NAME/ITEM#: VERT. WALL/2ND/PLATE 5		TRANSDUCER: ☒ DUAL ☐ SGL ☒ 0DEG ☐ ANGLE ____	
X_0 REF. POINT (L_0): 1" below HORZ Weld of 1st Pass To 4 of 2nd Pass	Y_0 REF. POINT (W_0): 0" From CL	SCAN WIDTH: 15"	

PART # / INDICATION	X START	X STOP	Y START	Y STOP	AVE. THK.	MIN. THK. R. LIG.	AREA REPORTABLE	MAX. THK.
0-12					.876"	.871"		.885"
12-21.2					.875"	.866"		.885"
SUMMARY								

REMARKS

Examiner	Analyst	Reviewer	Page
W D Rundt	[signature]	(W1)	
Level II Date 11/13/02	Level XX Date 11/22/03	Level ___ Date ___	___ of ___
P-Scan Limited			

(W1) See Attached Letter From J. B. Elder

4/00

ULTRASONIC P-SCAN DATA REPORT

Riser #31

LOCATION: 200 EAST TANK FARM	SYSTEM: PSP-4	EXAM START: 11/13/02 1855	EXAM END: 2110	JOB #: 03-41
COMPONENT ID: 101-AP		EXAMINATION SURFACE: ☒ OD ☐ ID ☐ PAINTED	CONDITION:
CONFIGURATION: PLATE	TO:	CALIBRATED RANGE: 0" TO 2.5"	TEMP: AMB °F
CIRCUMFERENCE/TOTAL LENGTH EXAMINED: 21.1"		REF. LEVEL CORRECTION (TRANS. CORR): 0 DB	
PROCEDURE: COG-EMA-SVUT-INS-007.3	REV: 1	MATERIAL TYPE: ☐ SS ☒ CS OTHER: Nom T# .875"	
FILE NAME/ITEM#: VERT. WALL / 2ND PLATE 5		TRANSDUCER: ☐ DUAL ☒ SGL ☐ 0DEG ☒ ANGLE 45°	
X_0 REF. POINT (L_0): 1" below Horz. Weld	Y_0 REF. POINT (W_0): 17" From ℄ of 1st Pass To ℄ of 2nd Pass	SCAN WIDTH: 15"	

	SIZING METHOD	ANGLE	REFERENCE CAL. SHEET	SET-UP
1	45/60 DEGREE SHEAR			
2	AATT			
3	RATT			
4	DUAL 0 DEGREE			

INDICATION INFORMATION

IND	METHOD	WELD SIDE	DEPTH R. LIG.	MAX AMP	X1	LENGTH	X2	Y1	WIDTH	Y2	INDICATION TYPE

REMARKS: NO CRACK LIKE INDICATIONS

Examiner	Analyst	Reviewer	Page
W D Purdy	Wesley D Nu	(11)	
Level VI Date 11/13/02	Level III Date 1/26/03	Level ___ Date ___	___ of ___
P-Scan Limited BP			

(11) See Attached Letter From J.B. Elder

4/00

AUTOMATED ULTRASONIC THICKNESS DATA REPORT

Riser # 31

LOCATION: 200 EAST TANK FARM	SYSTEM: PSP-4	EXAM START: 12/18/02 0800	EXAM END: 1350	JOB #: 03-41
COMPONENT ID: 101-AP		EXAMINATION SURFACE: ☒ OD ☐ ID ☐ PAINTED	NOM. THICKNESS: .937"
CONFIGURATION:	TO: KNUCKLE	CALIBRATED RANGE: .3" TO 1.0"	TEMP: Amb. °F
CIRCUMFERENCE/TOTAL LENGTH EXAMINED: 104.7"		REF. LEVEL CORRECTION (TRANS. CORR): Ø DB	
PROCEDURE: COGEMA-SVUT-INS-007.3	REV: 1	MATERIAL TYPE: ☐ SS ☒ CS OTHER ____	CONDITION:
FILE NAME/ITEM#: Y. ARM / KNUCKLE		TRANSDUCER: ☒ DUAL ☐ SGL ☒ 0DEG ☐ ANGLE ____	
X_0 REF. POINT (L_0) ~~Started @~~ North Air Line	Y_0 REF. POINT (W_0) 2" below HORZ Weld	SCAN WIDTH: 12.4"	

PART #/ INDICATION	X START	X STOP	Y START	Y STOP	AVE. THK.	MIN. THK. R. LIG.	AREA REPORTABLE	MAX. THK.
0-12					.937"	.889"		.950"
12-24					.935"	.907"		.945"
24-36					.935"	.912"		.945"
36-48					.935"	.906"		.945"
48-60					.934"	.891"		.945"
60-72					.935"	.871"		.945"
72-84					.935"	.875"		.945"
84-96					.939"	.891"		.945"
96-104.7					.938"	.905"		.945"
SUMMARY								

REMARKS

Examiner	Analyst	Reviewer	Page
[signature] Level II Date 12/18/02	[signature] Level III Date 1/23/03	(N1) Level ___ Date ___	___ of ___

(N1) See Attached Letter From J. B Elder

4/00

ULTRASONIC P-SCAN DATA REPORT

Riser # 31

LOCATION: 200 EAST TANK FARM	SYSTEM: PSP-4	EXAM START: 12/18/02 1405	EXAM END: 2215	JOB #: 03-41
COMPONENT ID: 101-AP		EXAMINATION SURFACE: ☒ OD ☐ ID ☐ PAINTED		CONDITION:
CONFIGURATION: TO KNUCKLE		CALIBRATED FROM: 0 TO 2.65"		TEMP: AMB °F
CIRCUMFERENCE/TOTAL LENGTH EXAMINED: 94.9"		REF. LEVEL CORRECTION (TRANS. CORR): X DB		
PROCEDURE: CDGEMA-SVUT-INS-007.3	REV: 1	MATERIAL TYPE: ☐ SS ☒ CS OTHER Nom THK .937"		
FILE NAME/ITEM#: Y-ARM / KNUCKLE		TRANSDUCER: ☐ DUAL ☒ SGL ☐ 0DEG ☒ ANGLE 45°		
X_0 REF. POINT (Lo): Started @ North Air Line	Y_0 REF. POINT (Wo): 2" below Horz Weld	SCAN WIDTH: 12"		

	SIZING METHOD	ANGLE	REFERENCE CAL. SHEET	SET-UP
1	45/60 DEGREE SHEAR			
2	AATT			
3	RATT			
4	DUAL 0 DEGREE			

INDICATION INFORMATION

IND	METHOD	WELD SIDE	DEPTH R. LIG.	MAX AMP	X1	LENGTH	X2	Y1	WIDTH	Y2	INDICATION TYPE

REMARKS

NO CRACK LIKE INDICATIONS

Examiner	Analyst	Reviewer	Page
[signature] Level III Date 12/18/02	[signature] Level III Date 12/26/03	(N1) Level ___ Date ___	___ of ___

(N1) See Attached Letter From J. B Elder

4/00

AUTOMATED ULTRASONIC THICKNESS DATA REPORT

Riser #31

LOCATION: 200 EAST TANK FARM	SYSTEM: PSP-4	EXAM START: 12/12/02 0930	EXAM END: 1100 / JOB #: 03-41
COMPONENT ID: 101-AP		EXAMINATION SURFACE: ☒ OD ☐ ID ☐ PAINTED	NOM. THICKNESS: .937"
CONFIGURATION: TO KNUCKLE		CALIBRATED RANGE: .3" TO 1.0"	TEMP: Amb °F
CIRCUMFERENCE/TOTAL LENGTH EXAMINED: 114.5"		REF. LEVEL CORRECTION (TRANS. CORR): Ø DB	
PROCEDURE: LOGEMA-SNUT-INS-007.3	REV: 1	MATERIAL TYPE: ☐ SS ☒ CS OTHER ____	CONDITION
FILE NAME/ITEM#: Y-ARM / KNUCKLE A		TRANSDUCER: ☒ DUAL ☐ SGL ☒ 00DEG ☐ ANGLE ____	
X_0 REF. POINT (i.e.) Started @ North Air Line	Y_0 REF. POINT (i.e.) 2" below Horz weld	SCAN WIDTH: 11.5"	

PART #/ INDICATION	X START	X STOP	Y START	Y STOP	AVE. THK.	MIN. THK. R. LIG.	AREA REPORTABLE	MAX. THK.
0-12					.945"	.895"		.955"
12-24					.945"	.897"		.950"
24-36					.940"	.908"		.950"
36-48					.936"	.897"		.945"
48-60					.932"	.898"		.940"
60-72					.935"	.890"		.945"
72-84					.932"	.866"		.945"
84-96					.930"	.880"		.940"
96-108					.930"	.891"		.940"
108-114.5					.930"	.877"		.940"
SUMMARY								

REMARKS

SCAN STARTED @ SOUTH SIDE OF VERT. WELD, NORTH OF 24" RISER.

Examiner	Analyst	Reviewer	Page
[signature] Level VII Date 12/12/02	[signature] Level VII Date 1/23/03	(W1) Level ___ Date ___	___ of ___

(W1) See Attached Letter From J. B. Elder

4/00

ULTRASONIC P-SCAN DATA REPORT

Riser # 31

LOCATION: 200 EAST TANK Farm	SYSTEM: PSP-4	EXAM START: 12/18/02 0800	EXAM END: 1350
JOB #: 03-41			
COMPONENT ID: 101-AP		EXAMINATION SURFACE: ☒ OD ☐ ID ☐ PAINTED	CONDITION:
CONFIGURATION:	TO: KNUCKLE	CALIBRATED RANGE: 0 to 2.65"	TEMP: AMB °F
CIRCUMFERENCE/TOTAL LENGTH EXAMINED: 116.8"		REF. LEVEL CORRECTION (TRANS. CORR): X DB	
PROCEDURE: COGEMA-SVUT-INS-007.3	REV: 1	MATERIAL TYPE: ☐ SS ☒ CS OTHER Nom. THK .937"	
FILE NAME/ITEM#: Y-Arm / KNUCKLE A		TRANSDUCER: ☐ DUAL ☒ SGL ☐ 0DEG ☒ ANGLE 45°	
X_0 REF. POINT (L_0) Started @ North Air Line	Y_0 REF. POINT (W_0) 2" below Horz Weld	SCAN WIDTH: 12"	

	SIZING METHOD	ANGLE	REFERENCE CAL. SHEET	SET-UP
1	45/60 DEGREE SHEAR			
2	AATT			
3	RATT			
4	DUAL 0 DEGREE			

INDICATION INFORMATION

IND	METHOD	WELD SIDE	DEPTH R. LIG.	MAX AMP	X1	LENGTH	X2	Y1	WIDTH	Y2	INDICATION TYPE

REMARKS

NO CRACK LIKE INDICATIONS

Scan started @ South side of Vert weld, North of 24" Riser

Examiner	Analyst	Reviewer	Page
[signature] Level III Date 12/18/02	[signature] Level III Date 1/26/03	(ND) Level ___ Date ___	___ of ___

(ND) See Attached Letter From J. B. Elder

4/00

AUTOMATED ULTRASONIC THICKNESS DATA REPORT

Riser # 31

LOCATION: 200 EAST TANK FARM	SYSTEM: PSP-4	EXAM START: 12/18/02 0800	EXAM END: 1350	JOB #: 03-41
COMPONENT ID: 101-AP		EXAMINATION SURFACE: ☒ OD ☐ ID ☐ PAINTED		NOM. THICKNESS: .937"
CONFIGURATION:	TO: KNUCKLE	CALIBRATED RANGE: 0" TO 1.0"		TEMP: Amb °F
CIRCUMFERENCE/TOTAL LENGTH EXAMINED: 16.1"		REF. LEVEL CORRECTION (TRANS. CORR): Ø DB		
PROCEDURE: COG-EMA-SVUT-INS-007.3	REV: 1	MATERIAL TYPE: ☐ SS ☒ CS OTHER ____		CONDITION:
FILE NAME/ITEM: Y-ARM / KNUCKLE T3		TRANSDUCER: ☒ DUAL ☐ SGL ☒ 0DEG ☐ ANGLE ____		
X_0 REF. POINT (L_0): Started @ North Air Line	Y_0 REF. POINT (W_0): 2" below HAZ weld	SCAN WIDTH: ~12.2"		

PART # / INDICATION	X START	X STOP	Y START	Y STOP	AVE. THK.	MIN. THK. R. LIG.	AREA REPORTABLE	MAX. THK.
0-12					.950"	.906"		.960"
12-16.1					.955"	.916"		.965"
SUMMARY								

REMARKS

STARTED @ SOUTH SIDE OF SECOND VERT WELD / VERT. WELD SOUTH OF 24" RESER

Examiner	Analyst	Reviewer	Page
Wesley D Mer	Wesley D Mer	(NI)	
Level VI Date 12/18/02	Level VI Date 1/23/03	Level ___ Date ___	___ of ___

(NI) See Attached Letter From J. B Elder

4/00

ULTRASONIC P-SCAN DATA REPORT

Riser #31

LOCATION: 200 EAST TANK FARM	SYSTEM: PSP-4	EXAM START: 12/18/02 1405	EXAM END: 22.15	JOB #: 03-41
COMPONENT ID: 101-AP		EXAMINATION SURFACE: ☒ OD ☐ ID ☐ PAINTED	CONDITION:
CONFIGURATION: TO KNUCKLE		CALIBRATED RANGE: 0 TO 2.65"	TEMP: AMB °F
CIRCUMFERENCE/TOTAL LENGTH EXAMINED: 42.5"		REF. LEVEL CORRECTION (TRANS. CORR): Ø DB	
PROCEDURE: CDGEMA-SVUT-INS-007.3	REV: 1	MATERIAL TYPE: ☐ SS ☒ CS OTHER NOM THK .937"	
FILE NAME/ITEM#: Y-ARM/KNUCKLE B		TRANSDUCER: ☐ DUAL ☒ SGL ☐ 0DEG ☒ ANGLE 45°	
X_0 REF. POINT (L_0) Started @ North Air Line	Y_0 REF. POINT (W_0) 2" below Horz weld	SCAN WIDTH: 12"	

	SIZING METHOD	ANGLE	REFERENCE CAL. SHEET	SET-UP
1	45/60 DEGREE SHEAR			
2	AATT			
3	RATT			
4	DUAL 0 DEGREE			

INDICATION INFORMATION

IND	METHOD	WELD SIDE	DEPTH R. LIG.	MAX AMP	X1	LENGTH	X2	Y1	WIDTH	Y2	INDICATION TYPE

REMARKS

NO CRACK LIKE INDICATIONS

Started @ South side of Second Vert weld / vert weld south of 24" Riser

Examiner	Analyst	Reviewer	Page
[signature] Level ~~III~~ Date 12/18/02	[signature] Level ~~III~~ Date 1/26/03	(N1) Level ___ Date ___	___ of ___

(N1) See Attached Letter From J. B. Elder

4/00

AUTOMATED ULTRASONIC THICKNESS DATA REPORT

RISER 31

LOCATION: 200 EAST TANK FARM	SYSTEM: PSP-4	EXAM START: 3/18/03 0815	EXAM END: 1035	JOB #: 03-41
COMPONENT ID: 101-AP		EXAMINATION SURFACE: ☒ OD ☐ ID ☐ PAINTED		NOM. THICKNESS: .937"
CONFIGURATION: KNUCKLE TO		CALIBRATED RANGE: .3" TO 1.0"		TEMP: AMB °F
CIRCUMFERENCE/TOTAL LENGTH EXAMINED: 7.5"		REF. LEVEL CORRECTION (TRANS. CORR): 0 DB		
PROCEDURE: CO GEMA - SVUT - INS - 007.3	REV: 1	MATERIAL TYPE: ☐ SS ☒ CS OTHER ____		CONDITION
FILE NAME/ITEM#: Y-ARM / SLOT 1		TRANSDUCER: ☒ DUAL ☐ SGL ☒ 0DEG ☐ ANGLE ____		
X_0 REF. POINT (L_0): N/A	Y_0 REF. POINT (W_0): TOP OF PAD (P) SLOT OPENING	SCAN WIDTH: .870"		

PART #/ INDICATION	X START	X STOP	Y START	Y STOP	AVE. THK.	MIN. THK. R. LIG.	AREA REPORTABLE	MAX. THK.
0 - 7.5"					.950"	.945"		.970"
SUMMARY								

REMARKS

Examiner	Analyst	Reviewer	Page
W D Purdy	Wesley T Rey	(NI)	
Level II Date 3/18/03	Level III Date 4/17/03	Level ___ Date ___	___ of ___

(NI) SEE ATTACHED LETTER FROM J. B. ELDER

4/00

AUTOMATED ULTRASONIC THICKNESS DATA REPORT

RISER 37

LOCATION: 200 EAST TANK FARM	SYSTEM: PSP-4	EXAM START: 3/17/03 0920	EXAM END: 2130	JOB #: 03-41
COMPONENT ID: 101-AP		EXAMINATION SURFACE: ☒ OD ☐ ID ☐ PAINTED	NOM. THICKNESS: .937"
CONFIGURATION: KNUCKLE	TO	CALIBRATED RANGE: .3" TO 1.0"	TEMP: AMB °F
CIRCUMFERENCE/TOTAL LENGTH EXAMINED: 5.7"		REF. LEVEL CORRECTION (TRANS. CORR): Ø DB	
PROCEDURE: COGEMA-SNUT-INS-007.3	REV: 1	MATERIAL TYPE: ☐ SS ☒ CS OTHER	CONDITION
FILE NAME/ITEM#: Y-ARM/SLOT A		TRANSDUCER: ☒ DUAL ☐ SGL ☒ 0DEG ☐ ANGLE	
X_0 REF. POINT (L_0): N/A	Y_0 REF. POINT (W_0): TOP OF PAD @ SLOT OPENING	SCAN WIDTH: 1"	

PART # / INDICATION	X START	X STOP	Y START	Y STOP	AVE. THK.	MIN. THK. R. LIG.	AREA REPORTABLE	MAX. THK.
0-5.7					.960"	.954"		.964"
SUMMARY								

REMARKS

(N1)

Examiner	Analyst	Reviewer	Page
W D Purdy	Wesley Mc	(N1)	
Level II Date 3/17/03	Level III Date 4/17/03	Level ___ Date ___	___ of ___
P-Scan Limited			

(N1) SEE ATTACHED LETTER FROM J. B. ELDER

4/00

AUTOMATED ULTRASONIC THICKNESS DATA REPORT

RISER 31

LOCATION: 200 EAST TANK FARM	SYSTEM: PSP4	EXAM START: 3/17/03 0920	EXAM END: 2130	JOB #: 03-41
COMPONENT ID: 101-AP		EXAMINATION SURFACE: ☒ OD ☐ ID ☐ PAINTED		NOM. THICKNESS:
CONFIGURATION: KNUCKLE	TO:	CALIBRATED RANGE: .3" TO 1.0"		TEMP: AMB °F
CIRCUMFERENCE/TOTAL LENGTH EXAMINED: 7.3"		REF. LEVEL CORRECTION (TRANS. CORR): 0 DB		
PROCEDURE: COGEMA-SVHT-INS-007.3	REV: 1	MATERIAL TYPE: ☐ SS ☒ CS OTHER ____		CONDITION:
FILE NAME/ITEM#: Y-ARM / SLOT B		TRANSDUCER: ☒ DUAL ☐ SGL ☒ 0DEG ☐ ANGLE ____		
X_0 REF. POINT (L_0): N/A	Y_0 REF. POINT (W_0): TOP OF PAD ☒ SLOT OPENING	SCAN WIDTH: .9"		

PART #/ INDICATION	X START	X STOP	Y START	Y STOP	AVE. THK.	MIN. THK. R. LIG.	AREA REPORTABLE	MAX. THK.
0-7.3					.957"	.944"		.966"
SUMMARY								

REMARKS

(N1) SEE ATTACHED LETTER FROM J. B. ELDER

Examiner	Analyst	Reviewer	Page
W D Purdy	Wesley D Rich	(N1)	
Level II Date 3/17/03	Level ___ Date 4/17/03	Level ___ Date ___	___ of ___
P-Scan Limited			

(N1) See Attached Letter From J.B Elder

4/00

AUTOMATED ULTRASONIC THICKNESS DATA REPORT

RESER 31

LOCATION: 200 EAST TANK FARM	SYSTEM: PSP-4	EXAM START: 3/18/03 0915	EXAM END: 1035 / JOB #: 03-41
COMPONENT ID: 101-AP		EXAMINATION SURFACE: ☒ OD ☐ ID ☐ PAINTED	NOM. THICKNESS: .937"
CONFIGURATION: KNUCKLE	TO	CALIBRATED RANGE: .3" TO 1.0	TEMP: AMB °F
CIRCUMFERENCE/TOTAL LENGTH EXAMINED: 7.1"		REF. LEVEL CORRECTION (TRANS. CORR): 0 DB	
PROCEDURE: COGEMA-SVUT-INS-007.3	REV: 1	MATERIAL TYPE: ☐ SS ☒ CS OTHER	CONDITION
FILE NAME/ITEM#: Y-ARM/SLOT D		TRANSDUCER: ☒ DUAL ☐ SGL ☒ 0DEG ☐ ANGLE	
X_0 REF. POINT (L_0): N/A	Y_0 REF. POINT (W_0): TOP OF PAD @ SLOT OPENING	SCAN WIDTH: 1"	

PART # / INDICATION	X START	X STOP	Y START	Y STOP	AVE. THK.	MIN. THK. R. LIG.	AREA REPORTABLE	MAX. THK.
0-7.1					.968"	.955"		.984"
SUMMARY								

REMARKS

Examiner	Analyst	Reviewer	Page
W D Purdy	[signature]	(N1)	
Level II Date 3/18/03	Level ~~III~~ Date 4/17/03	Level ___ Date ___	___ of ___

P-Scan Limited

(N1) SEE ATTACHED LETTER FROM J. B. ELDER

4/00

AUTOMATED ULTRASONIC THICKNESS DATA REPORT

RISER 31

LOCATION: 200 EAST TANK FARM	SYSTEM: PSP-4	EXAM START: 3/13/03 0934	EXAM END: 1332	JOB #: 03-41
COMPONENT ID: 101-AP		EXAMINATION SURFACE: ☒ OD ☐ ID ☐ PAINTED		NOM. THICKNESS: .500"
CONFIGURATION: PLATE TO PLATE		CALIBRATED RANGE: .3" TO 1.0"		TEMP: AMB °F
CIRCUMFERENCE/TOTAL LENGTH EXAMINED: 90.3"		REF. LEVEL CORRECTION (TRANS. CORR): ☒ DB		
PROCEDURE: COGEMA SVUT-ENS-007.3	REV: 1	MATERIAL TYPE: ☐ SS ☒ CS OTHER		CONDITION
FILE NAME/ITEM#: VERT. WELD 10/60/PLATE 2		TRANSDUCER: ☒ DUAL ☐ SGL ☒ 00EG ☐ ANGLE		
X_0 REF. POINT (L_0): STARTED 1" BELOW HORZ. WELD	Y_0 REF. POINT (W_0): ℄ OF VERT. WELD	SCAN WIDTH: 9.8"		

PART #/ INDICATION	X START	X STOP	Y START	Y STOP	AVE. THK.	MIN. THK. R. LIG.	AREA REPORTABLE	MAX. THK.
0-12					.512"	.499"		.530"
12-24					.515"	.506"		.530"
24-36					.515"	.509"		.530"
36-48					.515"	.510"		.530"
48-60					.518"	.504"		.530"
60-72					.517"	.500"		.530"
72-84					.515"	.506"		.530"
84-90.3					.515"	.501"		.530"
SUMMARY								

REMARKS

Examiner	Analyst	Reviewer	Page
Wesley H. Nelson Level II Date 3/13/03	Wesley H. Nelson Level II Date 4/17/03	(N1) Level ___ Date ___	___ of ___

(N1) SEE ATTACHED LETTER FROM J. B. FELDER

4/00

ULTRASONIC P-SCAN DATA REPORT

RISER 31

LOCATION: 200 EAST TANK FARM	SYSTEM: PSP-4	EXAM START: 3/13/03 08:20	EXAM END: 1342	JOB #: 03-41
COMPONENT ID: 101-AP		EXAMINATION SURFACE: ☒ OD ☐ ID ☐ PAINTED		CONDITION: N/A
CONFIGURATION: PLATE TO PLATE		CALIBRATED RANGE: 0" TO 1.414"		TEMP: AMB °F
CIRCUMFERENCE/TOTAL LENGTH EXAMINED: 91.8"		REF. LEVEL CORRECTION (TRANS. CORR): Ø DB		
PROCEDURE: COGFMA-SVUT-ENS-067.3	REV: 1	MATERIAL TYPE: ☐ SS ☒ CS OTHER TANK MAT'L .500"		
FILE NAME/ITEM#: VERT. WELD 0/60/PLATE 2		TRANSDUCER: ☐ DUAL ☒ SGL ☐ 0DEG ☒ ANGLE 60°		
X_0 REF. POINT (L_0): 1" BELOW HORZ. WELD	Y_0 REF. POINT (W_0): ℄ OF WELD	SCAN WIDTH: 9.4"		

	SIZING METHOD	ANGLE	REFERENCE CAL. SHEET	SET-UP
1	45/60 DEGREE SHEAR			
2	AATT			
3	RATT			
4	DUAL 0 DEGREE			

INDICATION INFORMATION

IND	METHOD	WELD SIDE	DEPTH R. LIG.	MAX AMP	X1	LENGTH	X2	Y1	WIDTH	Y2	INDICATION TYPE

REMARKS

NO CRACK LIKE INDICATIONS

Examiner	Analyst	Reviewer	Page
Wesley D. Rey	Wesley D. Rey	(N1)	
Level II Date 3/13/03	Level II Date 4/17/03	Level ___ Date ___	___ of ___

(N1) SEE ATTACHED LETTER FROM J. B. FELDER

4/00

AUTOMATED ULTRASONIC THICKNESS DATA REPORT

RISER 31

LOCATION: 200 EAST TANK FARM	SYSTEM: PSP-4	EXAM START: 1/9/03 0835	EXAM END: 1350	JOB #: 03-41
COMPONENT ID: 101-AP		EXAMINATION SURFACE: ☒ OD ☐ ID ☐ PAINTED		NOM. THICKNESS: .562"
CONFIGURATION: PLATE TO PLATE		CALIBRATED RANGE: .3" TO 1.0"		TEMP: AMB °F
CIRCUMFERENCE/TOTAL LENGTH EXAMINED: 88.9"		REF. LEVEL CORRECTION (TRANS. CORR): 8 DB		
PROCEDURE: COGEMA-SVUT-INS-007.3	REV: 1	MATERIAL TYPE: ☐ SS ☒ CS OTHER		CONDITION
FILE NAME/ITEM#: VERT. WELD / PLATE 3		TRANSDUCER: ☒ DUAL ☐ SGL ☒ 00EG ☐ ANGLE		
X_0 REF. POINT (L_0): 1" BELOW HORZ. WELD	Y_0 REF. POINT (W_0): 4" OF VERT WELD	SCAN WIDTH: 11.1"		

PART #/ INDICATION	X START	X STOP	Y START	Y STOP	AVE. THK.	MIN. THK. R. LIG.	AREA REPORTABLE	MAX. THK.
0-12					.580"	.562"		.590"
12-24					.583"	.562"		.590"
24-36					.584"	.568"		.590"
36-48					.585"	.570"		.590"
48-60					.585"	.565"		.590"
60-72					.590"	.570"		.595"
72-84					.585"	.563"		.595"
84-88.9					.580"	.564"		.598"
SUMMARY								

REMARKS

Examiner	Analyst	Reviewer	Page
W D Purdy	Wesley H Nu	(N1)	
Level II Date 1/9/03	Level VI Date 1/7/03	Level ___ Date ___	___ of ___
R-Scan Limited.			

(N1) SEE ATTACHED LETTER FROM J. B. ELDER

4/00

ULTRASONIC P-SCAN DATA REPORT

RISER 31

LOCATION: 200 EAST TANK FARM	SYSTEM: PSP-4	EXAM START: 1/9/03 0845	EXAM END: 1400	JOB #: 03-41
COMPONENT ID: 101-AP		EXAMINATION SURFACE: ☒ OD ☐ ID ☐ PAINTED		CONDITION:
CONFIGURATION: PLATE TO PLATE		CALIBRATED RANGE: 0" TO 3.0"		TEMP: AMB °F
CIRCUMFERENCE/TOTAL LENGTH EXAMINED: 87.2"		REF. LEVEL CORRECTION (TRANS. CORR): Ø DB		
PROCEDURE: COGEMA-SVWT-INS-007.3	REV: 1	MATERIAL TYPE: ☐ SS ☒ CS OTHER ____ THK. .562"		
FILE NAME/ITEM#: VERT. WELD / PLATE 3		TRANSDUCER: ☐ DUAL ☒ SGL ☐ 0DEG ☒ ANGLE 60°		
X_0 REF. POINT (L_0): 1" BELOW HORZ. WELD	Y_0 REF. POINT (W_0): ℄ OF VERT. WELD	SCAN WIDTH: 10.7"		

	SIZING METHOD	ANGLE	REFERENCE CAL. SHEET	SET-UP
1	45/60 DEGREE SHEAR			
2	AATT			
3	RATT			
4	DUAL 0 DEGREE			

INDICATION INFORMATION

IND	METHOD	WELD SIDE	DEPTH R. LIG.	MAX AMP	X1	LENGTH	X2	Y1	WIDTH	Y2	INDICATION TYPE

REMARKS

NO CRACK LIKE INDICATIONS

Examiner	Analyst	Reviewer	Page
W D Purdy	Wesley H Neu	(N1)	
Level II Date 1/9/03	Level II Date 4/9/03	Level ___ Date ___	___ of ___
P-Scan Limited			

(N1) SEE ATTACHED LETTER FROM J. B. ELDER

4/00

AUTOMATED ULTRASONIC THICKNESS DATA REPORT

RISER 31

LOCATION: 200 EAST TANK FARM	SYSTEM: PSP-4	EXAM START: 1/6/03 0915	EXAM END: 2032	JOB #: 03-41
COMPONENT ID: 101-AP		EXAMINATION SURFACE: ☒ OD ☐ ID ☐ PAINTED		NOM. THICKNESS:
CONFIGURATION: PLATE TO PLATE		CALIBRATED RANGE: 3" TO 1.0"		TEMP: AMB °F
CIRCUMFERENCE/TOTAL LENGTH EXAMINED: 28" / 78.4"		REF. LEVEL CORRECTION (TRANS. CORR): 8 DB		
PROCEDURE: COGEMA-SVUT-INS-067.3	REV: 1	MATERIAL TYPE: ☐ SS ☒ CS OTHER		CONDITION:
FILE NAME/ITEM#: VERT. WELD / PLATE 4 & PLATE 4A		TRANSDUCER: ☒ DUAL ☐ SGL ☒ 0DEG ☐ ANGLE		
X_0 REF. POINT (L_0): 1" BELOW HORZ. WELD	Y_0 REF. POINT (W_0): ℄ OF VERT. WELD	SCAN WIDTH: 11"		

	PART #/ INDICATION	X START	X STOP	Y START	Y STOP	AVE. THK.	MIN. THK. R. LIG.	AREA REPORTABLE	MAX. THK.
PLATE 4	0-12					.755"	.719"		.765"
	12-24					.755"	.725"		.765"
	24-28					.755"	.740"		.765"
PLATE 4A	0-12					.755"	.741"		.765"
	12-24					.755"	.736"		.765"
	24-36					.755"	.741"		.765"
	36-48					.755"	.730"		.765"
	48-60					.755"	.739"		.765"
	60-72					.750"	.727"		.760"
	72-78.4					.745"	.736"		.755"
	SUMMARY								

REMARKS

4A STARTED @ 27.9" OF 4

Examiner	Analyst	Reviewer	Page
W D Randall	[signature]	(N1)	
Level II Date 1/6/03	Level III Date 2/9/03	Level ___ Date ___	___ of ___
P-Scan Limited			

(N1) SEE ATTACHED LETTER FROM J. B. ELDER

4/00

ULTRASONIC P-SCAN DATA REPORT

RISER 31

LOCATION: 200 EAST TANK FARM	SYSTEM: PSP-4	EXAM START: 1/6/03 0940	EXAM END: 2035	JOB #: 03-41
COMPONENT ID: 101-AP		EXAMINATION SURFACE: ☒ OD ☐ ID ☐ PAINTED		CONDITION
CONFIGURATION: PLATE TO PLATE		CALIBRATED RANGE: 0" TO 3"		TEMP: AMB °F
CIRCUMFERENCE/TOTAL LENGTH EXAMINED: 26.3"/77"		REF. LEVEL CORRECTION (TRANS. CORR): Ø DB		
PROCEDURE: COGEMA-SNUT-INS-007.3	REV: 1	MATERIAL TYPE: ☐ SS ☒ CS OTHER TOR. 750"		
FILE NAME/ITEM#: VERT. WELD	PLATE 4 & 4A	TRANSDUCER: ☐ DUAL ☒ SGL ☐ 0DEG ☒ ANGLE 60°		
X_0 REF. POINT (L_0): 1" BELOW HORIZ. WELD	Y_0 REF. POINT (W_0): ℄ OF VERT. WELD	SCAN WIDTH: 10.5"		

SIZING METHOD	ANGLE	REFERENCE CAL. SHEET	SET-UP
1 45/60 DEGREE SHEAR			
2 AATT			
3 RATT			
4 DUAL 0 DEGREE			

INDICATION INFORMATION

IND	METHOD	WELD SIDE	DEPTH R. LIG.	MAX AMP	X1	LENGTH	X2	Y1	WIDTH	Y2	INDICATION TYPE

REMARKS

4A STARTED @ 27.9" OF 4

NO CRACK LIKE INDICATIONS

Examiner	Analyst	Reviewer	Page
W. Purdy	Wesley D. Klein	(N1)	
Level II Date 1/6/03	Level III Date 4/7/03	Level ___ Date ___	___ of ___
P-Scan Limited			

(N1) SEE ATTACHED LETTER FROM J. B. ELDER

4/00

AUTOMATED ULTRASONIC THICKNESS DATA REPORT

RISER 3.1

LOCATION: 200 EAST TANK FARM	SYSTEM: PSP-4	EXAM START: 1/8/03 0830	EXAM END: 1950
JOB #: 03-41			
COMPONENT ID: 101-AP		EXAMINATION SURFACE: ☒ OD ☐ ID ☐ PAINTED	NOM. THICKNESS:
CONFIGURATION: PLATE TO PLATE		CALIBRATED RANGE: .3" TO 1.0"	TEMP: AMB °F
CIRCUMFERENCE/TOTAL LENGTH EXAMINED: 15.1"		REF. LEVEL CORRECTION (TRANS. CORR): 0 DB	
PROCEDURE: COGEMA-SVUT-INS-007.3	REV: 1	MATERIAL TYPE: ☐ SS ☒ CS OTHER ____	CONDITION:
FILE NAME/ITEM#: VERT. WELD / PLATE 5		TRANSDUCER: ☒ DUAL ☐ SGL ☒ 0DEG ☐ ANGLE ____	
X_0 REF. POINT (L_0): 1" BELOW HORZ. WELD	Y_0 REF. POINT (W_0): ℄ OF VERT WELD	SCAN WIDTH: 10.9"	

PART #/ INDICATION	X START	X STOP	Y START	Y STOP	AVE. THK.	MIN. THK. R. LIG.	AREA REPORTABLE	MAX. THK.
0-12					.875"	.895"		.885"
12-15.1					.872"	.852"		.880"
SUMMARY								

REMARKS

Examiner	Analyst	Reviewer	Page
W D Purdy	Wesley H Nu	(N1)	
Level II Date 1/8/03	Level III Date 2/9/03	Level ___ Date ___	___ of ___
P-Scan Limited.			

(N1) SEE ATTACHED LETTER FROM J. B. ELDER

4/00

ULTRASONIC P-SCAN DATA REPORT

RISER 31

LOCATION: 200 EAST TANKFARM	SYSTEM: PSP-4	EXAM START: 1/6/03 0940	EXAM END: 2000	JOB #: 03-81
COMPONENT ID: 101-AP		EXAMINATION SURFACE: ☒ OD ☐ ID ☐ PAINTED		CONDITION:
CONFIGURATION: PLATE TO PLATE		CALIBRATED RANGE: 0" TO 3.5"		TEMP: AMB °F
CIRCUMFERENCE/TOTAL LENGTH EXAMINED: 13.7"		REF. LEVEL CORRECTION (TRANS. CORR): Ø DB		
PROCEDURE: COGEMA-SVUT-ENS-007.3	REV: 1	MATERIAL TYPE: ☐ SS ☐ CS OTHER TAK. .875"		
FILE NAME/ITEM#: VERT. WELD / PLATE 5		TRANSDUCER: ☐ DUAL ☒ SGL ☐ DDEG ☒ ANGLE 60°		
X_0 REF. POINT (L_0): 1" BELOW HORZ. WELD	Y_0 REF. POINT (W_0): ℄ OF VERT. WELD	SCAN WIDTH: 10.2"		

	SIZING METHOD	ANGLE	REFERENCE CAL. SHEET	SET-UP
1	45/60 DEGREE SHEAR			
2	AATT			
3	RATT			
4	DUAL 0 DEGREE			

INDICATION INFORMATION

IND	METHOD	WELD SIDE	DEPTH R. LIG.	MAX AMP	X1	LENGTH	X2	Y1	WIDTH	Y2	INDICATION TYPE

REMARKS
NO CRACK LIKE INDICATIONS

Examiner	Analyst	Reviewer	Page
W D Purdy	[signature]	(N1)	
Level II Date 1/6/03	Level III Date 4/9/03	Level ___ Date ___	___ of ___
P-Scan Limited			

(N1) SEE ATTACHED LETTER FROM J. B. ELDER

4/00

ULTRASONIC P-SCAN DATA REPORT

Riser# 31

LOCATION: 200 EAST TANK FARM	SYSTEM: PSP-4	EXAM START: 1/13/03 1015	EXAM END: 1445	JOB #: 03-41
COMPONENT ID: 101-AP		EXAMINATION SURFACE: ☒ OD ☐ ID ☐ PAINTED		CONDITION:
CONFIGURATION: PLATE TO PLATE		CALIBRATED RANGE: 0" TO 1.414"		TEMP: AMB °F
CIRCUMFERENCE/TOTAL LENGTH EXAMINED: 88.1"		REF. LEVEL CORRECTION (TRANS. CORR): Ø DB		
PROCEDURE: CDG-EMA-SVUT-INS-007.3	REV: 1	MATERIAL TYPE: ☐ SS ☒ CS OTHER THK .500"		
FILE NAME/ITEM#: VERT. WELD 145/PLATE 2		TRANSDUCER: ☐ DUAL ☒ SGL ☐ 00EG ☒ ANGLE 45°		
X_0 REF. POINT (L_0): 1" below HORZ Weld	Y_0 REF. POINT (W_0): ℄ of Vert. Weld	SCAN WIDTH: 10.9"		

	SIZING METHOD	ANGLE	REFERENCE CAL. SHEET	SET-UP
1	45/60 DEGREE SHEAR			
2	AATT			
3	RATT			
4	DUAL 0 DEGREE			

INDICATION INFORMATION

IND	METHOD	WELD SIDE	DEPTH R. LIG.	MAX AMP	X1	LENGTH	X2	Y1	WIDTH	Y2	INDICATION TYPE

REMARKS
NO Crack Like Indications

Examiner	Analyst	Reviewer	Page
W D Rudy	Walter Mike	(N1)	
Level II Date 1/13/03	Level II Date 4/9/03	Level ___ Date ___	___ of ___
P-Scan Limited.			

(N1) See Attached Letter From J.B Elder

4/00

ULTRASONIC P-SCAN DATA REPORT

Riser #31

LOCATION: 200 EAST TANK FARM	SYSTEM: PSP-4	EXAM START: 1/13/03 1505	EXAM END: 2015	JOB #: 03-41
COMPONENT ID: 101-AP		EXAMINATION SURFACE: ☒ OD ☐ ID ☐ PAINTED		CONDITION:
CONFIGURATION: PLATE TO PLATE		CALIBRATED RANGE: 0" TO 1.59"		TEMP: AMB °F
CIRCUMFERENCE/TOTAL LENGTH EXAMINED: 87.8"		REF. LEVEL CORRECTION (TRANS. CORR): 0 DB		
PROCEDURE: COGEMA-SVUT-INS-007.3	REV: 1	MATERIAL TYPE: ☐ SS ☒ CS OTHER TNK .5625"		
FILE NAME/ITEM#: VERT. WELD/45/PLATE 3		TRANSDUCER: ☐ DUAL ☒ SGL ☐ 0DEG ☒ ANGLE 45°		
X_0 REF. POINT (L_0): 1" below HORZ Weld	Y_0 REF. POINT (W_0): ℄ of Vert Weld	SCAN WIDTH: 10.9"		

	SIZING METHOD	ANGLE	REFERENCE CAL. SHEET	SET-UP
1	45/60 DEGREE SHEAR			
2	AATT			
3	RATT			
4	DUAL 0 DEGREE			

INDICATION INFORMATION

IND	METHOD	WELD SIDE	DEPTH R. LIG.	MAX AMP	X1	LENGTH	X2	Y1	WIDTH	Y2	INDICATION TYPE

REMARKS: No Crack Like Indications

Examiner	Analyst	Reviewer	Page
W D Purdy	[signature]	(NI)	
Level II Date 1/13/03	Level III Date 4/9/03	Level ___ Date ___	___ of ___
P-Scan Limited			

(NI)

4/00

ULTRASONIC P-SCAN DATA REPORT

Riser # 31

LOCATION: 200 EAST TANK FARM	SYSTEM: PSP-4	EXAM START: 1/14/03 0810	EXAM END: 1410	JOB #: 03-41
COMPONENT ID: 101-AP		EXAMINATION SURFACE: ☒ OD ☐ ID ☐ PAINTED		CONDITION:
CONFIGURATION: PLATE TO PLATE		CALIBRATED RANGE: 0" TO 2.12"		TEMP: AMB °F
CIRCUMFERENCE/TOTAL LENGTH EXAMINED: 104.8"		REF. LEVEL CORRECTION (TRANS. CORR): 0 DB		
PROCEDURE: COGEMA-SVUT-INS-007.3	REV: 1	MATERIAL TYPE: ☐ SS ☒ CS OTHER TANK .750"		
FILE NAME/ITEM#: VERT. WELD/45°/PLATE 4		TRANSDUCER: ☐ DUAL ☒ SGL ☐ 0DEG ☒ ANGLE 45°		
X_0 REF. POINT (L_0): 1" below HORZ Weld	Y_0 REF. POINT (W_0): ℄ of Vert Weld	SCAN WIDTH: 11.6"		

	SIZING METHOD	ANGLE	REFERENCE CAL. SHEET	SET-UP
1	45/60 DEGREE SHEAR			
2	AATT			
3	RATT			
4	DUAL 0 DEGREE			

INDICATION INFORMATION

IND	METHOD	WELD SIDE	DEPTH R. LIG.	MAX AMP	X1	LENGTH	X2	Y1	WIDTH	Y2	INDICATION TYPE

REMARKS
NO Crack Like Indications

Examiner	Analyst	Reviewer	Page
W D Purdy	Wesley D Rex	(NI)	
Level II Date 1/14/03	Level III Date 4/9/03	Level ___ Date ___	___ of ___
P-Scan Limited			

(NI) See Attached Letter From J. B Elder

4/00

ULTRASONIC P-SCAN DATA REPORT

Riser # 31

LOCATION: 200 EAST TANK FARM	SYSTEM: PSP-4	EXAM START: 1/15/03 0815	EXAM END: 1945	JOB #: 03-41
COMPONENT ID: 101-AP		EXAMINATION SURFACE: ☒ OD ☐ ID ☐ PAINTED		CONDITION:
CONFIGURATION: PLATE TO PLATE		CALIBRATED RANGE: 0" TO 2.5"		TEMP: AMB °F
CIRCUMFERENCE/TOTAL LENGTH EXAMINED: 20.8"		REF. LEVEL CORRECTION (TRANS. CORR): Ø DB		
PROCEDURE: COGEMA-SVUT-INS-007.3	REV: 1	MATERIAL TYPE: ☐ SS ☒ CS OTHER TAK .875"		
FILE NAME/ITEM#: VERT. WELD /45/PLATE 5		TRANSDUCER: ☐ DUAL ☒ SGL ☐ 0DEG ☒ ANGLE 45		
X_0 REF. POINT (L_0): 1" below HAZ weld	Y_0 REF. POINT (W_0): ℄ of Vert Weld	SCAN WIDTH: 11.1"		

SIZING METHOD	ANGLE	REFERENCE CAL. SHEET	SET-UP
1 45/60 DEGREE SHEAR			
2 AATT			
3 RATT			
4 DUAL 0 DEGREE			

INDICATION INFORMATION

IND	METHOD	WELD SIDE	DEPTH R. LIG.	MAX AMP	X1	LENGTH	X2	Y1	WIDTH	Y2	INDICATION TYPE

REMARKS: No Crack Like Indications

Examiner	Analyst	Reviewer	Page
W D Pandy	Wesley H Nelson	(N1)	
Level II Date 1/15/03	Level II Date 4/9/03	Level ___ Date ___	___ of ___
P-Scan Limited			

(N1) See Attached Letter From J. B Elder

4/00

AUTOMATED ULTRASONIC THICKNESS DATA REPORT

Riser # 31

LOCATION: 200 EAST TANK FARM	SYSTEM: PSP-4	EXAM START: 1/8/03 0830	EXAM END: 1950 / JOB #: 03-41
COMPONENT ID: 101-AP		EXAMINATION SURFACE: ☒ OD ☐ ID ☐ PAINTED	NOM. THICKNESS: .875"/.937"
CONFIGURATION: PLATE TO KNUCKLE		CALIBRATED RANGE: .3" TO 1.0"	TEMP: AMB °F
CIRCUMFERENCE/TOTAL LENGTH EXAMINED: 65.4"		REF. LEVEL CORRECTION (TRANS. CORR): 8 DB	
PROCEDURE: COGEMA-SVUT-INS-007.3	REV: 1	MATERIAL TYPE: ☐ SS ☒ CS OTHER ____	CONDITION
FILE NAME/ITEM#: HORZ. WELD PLATE/KNUCKLE		TRANSDUCER: ☒ DUAL ☐ SGL ☒ 0DEG ☐ ANGLE ____	
X_0 REF. POINT (Lo): South of North Air Line	Y_0 REF. POINT (W_0): ☒ Air Slot ☐ ____ Cl of Horz Weld	SCAN WIDTH: 10.3"	

	PART #/ INDICATION	X START	X STOP	Y START	Y STOP	AVE. THK.	MIN. THK. R. LIG.	AREA REPORTABLE	MAX. THK.
PLATE	0-12					.875"	.860"		.885"
	12-24					.876"	.872"		.885"
	24-36					.876"	.868"		.885"
	36-48					.876"	.867"		.885"
	46-60					.877"	.869"		.885"
	60-65.4					.877"	.867"		.885"
KNUCKLE	0-12					.935"	.913"		.945"
	12-24					.930"	.896"		.940"
	24-36					.925"	.910"		.935"
	36-48					.923"	.898"		.930"
	48-60					.920"	.884"		.930"
	60-65.4					.920"	.907"		.930"
	SUMMARY								

REMARKS

Examiner	Analyst	Reviewer	Page
W D Purdy	[signature]	(N1)	
Level II Date 1/8/03	Level II Date 1/29/03	Level ___ Date ___	___ of ___
RSCAN Limited			

(N1) See Attached Letter From J. B Elder

4/00

AUTOMATED ULTRASONIC THICKNESS DATA REPORT

Riser #31

LOCATION: 200 EAST TANK FARM	SYSTEM: PSP-4	EXAM START: 1/8/03 0825	EXAM END: 1950	JOB #: 03-41
COMPONENT ID: 101-AP		EXAMINATION SURFACE: ☒ OD ☐ ID ☐ PAINTED		NOM. THICKNESS: .875"
CONFIGURATION: PLATE TO KNUCKLE		CALIBRATED RANGE: .3" TO 1.0"		TEMP: AMB °F
CIRCUMFERENCE/TOTAL LENGTH EXAMINED: 120"		REF. LEVEL CORRECTION (TRANS. CORR): 0 DB		
PROCEDURE: COGEMA-SVUT-INS-007.3	REV: 1	MATERIAL TYPE: ☐ SS ☒ CS OTHER		CONDITION
FILE NAME/ITEM#: HORZ. WELD PLATE/KNUCKLE A		TRANSDUCER: ☒ DUAL ☐ SGL ☒ 0DEG ☐ ANGLE		
X_0 REF. POINT (L_0): 3rd Air Slot South of North Air Line	Y_0 REF. POINT (W_0): ℄ of Horz Weld	SCAN WIDTH: 10.3"		

PART #/ INDICATION	X START	X STOP	Y START	Y STOP	AVE. THK.	MIN. THK. R. LIG.	AREA REPORTABLE	MAX. THK.
0-12					.875"	.865"		.885"
12-24					.878"	.869"		.885"
24-36					.878"	.858"		.885"
36-48					.878"	.874"		.885"
48-60					.877"	.870"		.885"
60-72					.876"	.866"		.885"
72-84					.875"	.866"		.885"
84-96					.876"	.866"		.885"
96-108					.876"	.871"		.885"
108-120					.876"	.861"		.885"
SUMMARY								

PLATE STOP

REMARKS

Started @ 63.7" of File Plate/Knuckle.

Examiner	Analyst	Reviewer	Page
WD Purdy	Wesley D Nu	(N1)	
Level II Date 1/8/03	Level II Date 1/29/03	Level ___ Date ___	___ of ___
P-Scan Limited			

(N1) See Attached Letter From J. B Elder

4/00

AUTOMATED ULTRASONIC THICKNESS DATA REPORT

Riser #51

LOCATION: 200 EAST TANK FARM	SYSTEM: PSP-4	EXAM START: 1/8/03 0830	EXAM END: 1950	JOB #: 03-41
COMPONENT ID: 101-AP		EXAMINATION SURFACE: ☒ OD ☐ ID ☐ PAINTED		NOM. THICKNESS: .937"
CONFIGURATION: PLATE TO KNUCKLE		CALIBRATED RANGE: .3" TO 1.0"		TEMP: AMB °F
CIRCUMFERENCE/TOTAL LENGTH EXAMINED: 120"		REF. LEVEL CORRECTION (TRANS. CORR): 0 DB		
PROCEDURE: COGEMA-SVUT-INS-007.3	REV: 1	MATERIAL TYPE: ☐ SS ☒ CS OTHER		CONDITION
FILE NAME/ITEM#: HORZ. WELD PLATE/KNUCKLE A		TRANSDUCER: ☒ DUAL ☐ SGL ☒ 0DEG ☐ ANGLE		
X_0 REF. POINT (L_0): Air Slot South of North Air Line	Y_0 REF. POINT (W_0): CL of Horz Weld	SCAN WIDTH: 10.5"		

PART #/ INDICATION	X START	X STOP	Y START	Y STOP	AVE. THK.	MIN. THK. R. LIG.	AREA REPORTABLE	MAX. THK.
0-12					.920"	.905"		.925"
12-24					.915"	.897"		.925"
24-36					.915"	.889"		.925"
36-48					.917"	.906"		.925"
48-60					.920"	.898"		.950" ← CROSSED VERT. WELD
60-72					.948"	.939"		.950"
72-84					.947"	.920"		.950"
84-96					.947"	.929"		.950"
96-108					.948"	.935"		.950"
108-120					.949"	.922		.995"
SUMMARY								

KNUCKLE SEAM

REMARKS

Started @ 63.7" of File Plate/Knuckle

Examiner	Analyst	Reviewer	Page
W D Purdy	Walter H Nu	(NI)	
Level II Date 1/8/03	Level III Date 1/29/03	Level ___ Date ___	___ of ___
RScan Limited			

(NI) see Attached Letter From J. B Elder

4/00

AUTOMATED ULTRASONIC THICKNESS DATA REPORT

Riser # 31

LOCATION: 200 EAST TANK FARM	SYSTEM: PSP-4	EXAM START: 1/8/03 0830	EXAM END: 1950
JOB #: 03-41			
COMPONENT ID: 101-AP	EXAMINATION SURFACE: ☒ OD ☐ ID ☐ PAINTED	NOM. THICKNESS: .875/.937"	
CONFIGURATION: PLATE TO KNUCKLE	CALIBRATED RANGE: .3" TO 1.0"	TEMP: AMB °F	
CIRCUMFERENCE/TOTAL LENGTH EXAMINED: 61.9"	REF. LEVEL CORRECTION (TRANS. CORR): 0 DB		
PROCEDURE: COGEMA-SVUT-305-007.3	REV: 1	MATERIAL TYPE: ☐ SS ☒ CS OTHER	CONDITION
FILE NAME/ITEM#: Horz weld Plate/Knuckle B	TRANSDUCER: ☒ DUAL ☐ SGL ☒ 00DEG ☐ ANGLE		
X_0 REF. POINT (L_0)	Y_0 REF. POINT (W_0)	SCAN WIDTH: 10.3"	

	PART #1 INDICATION	X START	X STOP	Y START	Y STOP	AVE. THK.	MIN. THK. R. LIG.	AREA REPORTABLE	MAX. THK.
PLATE	0-12					.878"	.875"		.885"
	12-24					.878"	.873"		.885"
	24-36					.880"	.867"		.885"
	36-48					.881"	.875"		.890"
	48-60"					.880"	.854"		.890"
	60-61.9"					.882"	.875"		.890"
KNUCKLE	0-12					.948"	.929"		.955"
	12-24					.946"	.936"		.955"
	24-36					.947"	.908"		.955"
	36-48					.945"	.922"		.955"
	48-60					.964	.926"		.970" — CROSSED VERT WELD
	60-61.9					.963"	.955"		.970"
	SUMMARY								

REMARKS

Started @ End of File Plate/Knuckle A.

Examiner	Analyst	Reviewer	Page
W D Purdy	Wesley [illegible]	(W1)	
Level II Date 1/8/03	Level III Date 1/29/03	Level ___ Date ___	___ of ___
P-Scan Limited			

(W1) See Attached Letter From J. B Elder

4/00

ULTRASONIC P-SCAN DATA REPORT

RISER 31

LOCATION: 200 EAST TANK FARM	SYSTEM: PSP-4	EXAM START: 1/8/03 0840	EXAM END: 2000	JOB #: 03-41
COMPONENT ID: 101-AP		EXAMINATION SURFACE: ☒ OD ☐ ID ☐ PAINTED		CONDITION: N/A
CONFIGURATION: PLATE TO KNUCKLE		CALIBRATED RANGE: 0" TO 3.75"		TEMP: AMB °F
CIRCUMFERENCE/TOTAL LENGTH EXAMINED: 63.7"		REF. LEVEL CORRECTION (TRANS. CORR): 0 DB		
PROCEDURE: COGEMA-SNUT-IPS-007.3	REV: 1	MATERIAL TYPE: ☐ SS ☒ CS OTHER THK. .875"/.937"		
FILE NAME/ITEM#: HORZ. WELD PLATE/KNUCKLE		TRANSDUCER: ☐ DUAL ☒ SGL ☐ 0DEG ☒ ANGLE 60°		
X_0 REF. POINT (L_0) STARTED @ NORTH ARE LENE	Y_0 REF. POINT (W_0) 4 OF HORZ. WELD	SCAN WIDTH: 10.3"		

SIZING METHOD	ANGLE	REFERENCE CAL. SHEET	SET-UP
1 45/60 DEGREE SHEAR			
2 AATT			
3 RATT			
4 DUAL 0 DEGREE			

INDICATION INFORMATION

IND	METHOD	WELD SIDE	DEPTH R. LIG.	MAX AMP	X1	LENGTH	X2	Y1	WIDTH	Y2	INDICATION TYPE

REMARKS
NO CRACK LIKE INDICATIONS

Examiner	Analyst	Reviewer	Page
W D Purdy	[signature]	(N1)	
Level II Date 1/8/03	Level III Date 4/17/03	Level ___ Date ___	___ of ___
P-Scan Limited			

(N1) SEE ATTACHED LETTER FROM J. B. ELDER

4/00

ULTRASONIC P-SCAN DATA REPORT

RISER 31

LOCATION: 200 EAST TANK FARM	SYSTEM: PSP-2	EXAM START: 1/9/03 0940	EXAM END: 2000	JOB #: 03-41
COMPONENT ID: 101-AP		EXAMINATION SURFACE: ☒ OD ☐ ID ☐ PAINTED		CONDITION: N/A
CONFIGURATION: PLATE TO KNUCKLE		CALIBRATED RANGE: 0" TO 3.75"		TEMP: AMB °F
CIRCUMFERENCE/TOTAL LENGTH EXAMINED: 120"		REF. LEVEL CORRECTION (TRANS. CORR): 0 DB		
PROCEDURE: COGEMA-SNUT-INS-007.3	REV: 1	MATERIAL TYPE: ☐ SS ☒ CS OTHER THK. .875"/.937"		
FILE NAME/ITEM#: HORZ. WELD PLATE/KNUCKLE A		TRANSDUCER: ☐ DUAL ☒ SGL ☐ 0DEG ☒ ANGLE 60°		
X_0 REF. POINT (L_0): VERT. WELD KNUCKLE SIDE / N OF 24"	Y_0 REF. POINT (W_0): ℄ OF HORZ. WELD	SCAN WIDTH: 10.3"		

SIZING METHOD	ANGLE	REFERENCE CAL. SHEET	SET-UP
1 45/60 DEGREE SHEAR			
2 AATT			
3 RATT			
4 DUAL 0 DEGREE			

INDICATION INFORMATION

IND	METHOD	WELD SIDE	DEPTH R. LIG.	MAX AMP	X1	LENGTH	X2	Y1	WIDTH	Y2	INDICATION TYPE

REMARKS
NO CRACK LIKE INDICATIONS

Examiner	Analyst	Reviewer	Page
W D Purdy	Wesley D Nee	(N1)	
Level II Date 1/9/03	Level III Date 4/17/03	Level ___ Date ___	___ of ___
P-Scan Limited			

(N1) SEE ATTACHED LETTER FROM J. B. ELDER

4/00

ULTRASONIC P-SCAN DATA REPORT

RISER 31

LOCATION: 200 EAST TANK FARM	SYSTEM: PSP-L	EXAM START: 1/8/03 0940	EXAM END: 2000	JOB #: 03-41
COMPONENT ID: 101-AP		EXAMINATION SURFACE: ☒ OD ☐ ID ☐ PAINTED		CONDITION: N/A
CONFIGURATION: PLATE TO KNUCKLE		CALIBRATED RANGE: 0" TO 3.75"		TEMP: AMB °F
CIRCUMFERENCE/TOTAL LENGTH EXAMINED: 60.2"		REF. LEVEL CORRECTION (TRANS. CORR): 0 DB		
PROCEDURE: COGEMA-NUT-IPS-007.3	REV: 1	MATERIAL TYPE: ☐ SS ☒ CS OTHER THK. .875"/.937"		
FILE NAME/ITEM#: HORZ. WELD/ PLATE/KNUCKLE B		TRANSDUCER: ☐ DUAL ☒ SGL ☐ 0DEG ☒ ANGLE 60°		
X_0 REF. POINT (L_0): VERT. WELD KNUCKLE-SEOB / SOUTH 24"	Y_0 REF. POINT (W_0): ℄ OF HORZ. WELD	SCAN WIDTH: 10.3"		

SIZING METHOD	ANGLE	REFERENCE CAL. SHEET	SET-UP
1 45/60 DEGREE SHEAR			
2 AATT			
3 RATT			
4 DUAL 0 DEGREE			

INDICATION INFORMATION

IND	METHOD	WELD SIDE	DEPTH R. LIG.	MAX AMP	X1	LENGTH	X2	Y1	WIDTH	Y2	INDICATION TYPE

REMARKS
NO CRACK LIKE INDICATIONS

Examiner	Analyst	Reviewer	Page
W D Purdy Level II Date 1/8/03 P-Scan Limited	Wesley A Rey Level III Date 4/17/03	(N1) Level ___ Date ___	___ of ___

(N1) SEE ATTACHED LETTER FROM J. B. ELDER

4/00

ULTRASONIC P-SCAN DATA REPORT

Riser #31

LOCATION: 200 EAST TANK FARM	SYSTEM: PSP-4	EXAM START: 1-15-03 0815	EXAM END: 1945	JOB #: 03-41
COMPONENT ID: 101-AP		EXAMINATION SURFACE: ☒ OD ☐ ID ☐ PAINTED		CONDITION:
CONFIGURATION: PLATE TO KNUCKLE		CALIBRATED RANGE: 0" TO 2.65"		TEMP: AMB °F
CIRCUMFERENCE/TOTAL LENGTH EXAMINED: 120"		REF. LEVEL CORRECTION (TRANS. CORR): 0 DB		
PROCEDURE: COGEMA-SVUT-INS-007.3	REV: 1	MATERIAL TYPE: ☐ SS ☒ CS OTHER TAK. .875/.937"		
FILE NAME/ITEM#: HORZ. WELD/45/KNUCKLE/PLATE		TRANSDUCER: ☐ DUAL ☒ SGL ☐ 0DEG ☒ ANGLE 45°		
X_0 REF. POINT (L_0) 2nd slot South of Northairline	Y_0 REF. POINT (W_0) ℄ of HORZ Weld	SCAN WIDTH: 11.3"		

	SIZING METHOD	ANGLE	REFERENCE CAL. SHEET	SET-UP
1	45/60 DEGREE SHEAR			
2	AATT			
3	RATT			
4	DUAL 0 DEGREE			

INDICATION INFORMATION

IND	METHOD	WELD SIDE	DEPTH R. LIG.	MAX AMP	X1	LENGTH	X2	Y1	WIDTH	Y2	INDICATION TYPE

REMARKS

NO CRACK LIKE INDICATIONS

Examiner	Analyst	Reviewer	Page
W D Rudd	Wesley D Nelson	(N1)	
Level II Date 1-15-03	Level III Date 4/15/03	Level ___ Date ___	___ of ___
P-Scan Limited			

(N1) See Attached Letter From J. B Elder

4/00

ULTRASONIC P-SCAN DATA REPORT

Riser #31

LOCATION: 200 EAST TANK FARM	SYSTEM: PSP-4	EXAM START: 1-15-03 0815	EXAM END: 1945	JOB #: 03-41
COMPONENT ID: 101-AP		EXAMINATION SURFACE: ☒ OD ☐ ID ☐ PAINTED		CONDITION:
CONFIGURATION: PLATE TO KNUCKLE		CALIBRATED RANGE: 0" TO 2.65"		TEMP: AMB °F
CIRCUMFERENCE/TOTAL LENGTH EXAMINED: 120"		REF. LEVEL CORRECTION (TRANS. CORR): 0 DB		
PROCEDURE: COGEMA-SVUT-INS-007.3	REV: 1	MATERIAL TYPE: ☐ SS ☒ CS OTHER TBK: .875"/.937"		
FILE NAME/ITEM#: HOLZ. WELD/45/KNUCKLE/PLATE A		TRANSDUCER: ☐ DUAL ☒ SGL ☐ 0DEG ☒ ANGLE 45°		
X_0 REF. POINT (L_0) 3rd slot South of North Airline	Y_0 REF. POINT (W_0) ℄ of Holz Weld	SCAN WIDTH: 11.3"		

	SIZING METHOD	ANGLE	REFERENCE CAL. SHEET	SET-UP
1	45/60 DEGREE SHEAR			
2	AATT			
3	RATT			
4	DUAL 0 DEGREE			

INDICATION INFORMATION

IND	METHOD	WELD SIDE	DEPTH R. LIG.	MAX AMP	X1	LENGTH	X2	Y1	WIDTH	Y2	INDICATION TYPE

REMARKS: NO CRACK LIKE INDICATIONS

Examiner	Analyst	Reviewer	Page
W D Purdy (NI) Level II Date 1/15/03 P-Scan Limited	Wesley D Nash Level III Date 4/15/03	(NI) Level ___ Date ___	___ of ___

(NI) See Attached Letter From J.B. Elder

4/00

AUTOMATED ULTRASONIC P-SCAN CALIBRATION SHEET

03-41

LOCATION: 200 EAST TANK FARM	SYSTEM: AP-101 Riser 31	CALIBRATION BLOCK: Notch Block	584-99-30-146
PROCEDURE: CDGEMA-SVUT-INS-007.3 Rev 1		THICKNESS: 1.0"	MATERIAL: C/S.
UT SYSTEM: PSP-4	SERIAL #: 201/206	REFERENCE BLOCK: N/A	
SOFTWARE VERSION: P-Scan Sys 4 1.3	REV.: 2	THICKNESS: N/A	MATERIAL: N/A
LINEARITY DUE DATE: 1-17-03		REFERENCE BLOCK TEMP: Amb. °F	PYRO SN: N/A
SCANNER TYPE: AWS-5d	SERIAL #	COUPLANT: H_2O	BATCH #: N/A
SCANNER CABLE: COAX		CABLE LENGTH: 80 FT	CABLE #
SIGNAL CABLE: COAX		CABLE LENGTH: 80 FT	CABLE #

CHANNEL	TRANSDUCER MAKE	MODEL	FREQ. MHz	SIZE	SERIAL #	GATE EVAL METHOD	ANGLE NOM./ACT.	WEDGE TYPE	IMAGE
1	KB	MWB	4	8x9 MM	3143		45		DATA
2	KB	MWB	4	8x9 MM	3133		45		DATA
3									
4									

	INITIAL CALIBRATION	CALIBRATION CHECKS							
DATE	10/30/02	10/30/02	10/31/02	10/31/02	11/1/02	11/1/02	11/4/02	11/4/02
TIME	0820	1622	0830	1555	0855	1327	0900	1555
REFLECTOR / ORRIENTATION	Notch .050"	Notch .050"	Notch .050"	Notch .050"	Notch .050"	Notch .050"	Notch .050"	Notch .050"
CH. 1 AMPLITUDE	80%/0dB	80%/0dB	80%/0dB	80%/1dB	80%/0dB	80%/1dB	80%/0dB	80%/0dB
CH. 1 LOCATION	1.414	1.41	1.414	1.417	1.414	1.414	1.414	1.414
CH. 2 AMPLITUDE	80%/0dB	80%/0dB	80%/0dB	80%/1dB	80%/0dB	80%/1dB	80%/0dB	80%/1dB
CH. 2 LOCATION	1.414	1.414	1.414	1.425	1.414	1.417	1.414	1.414
CH. 3 AMPLITUDE								
CH. 3 LOCATION								
CH. 4 AMPLITUDE								
CH. 4 LOCATION								
FILE #								
EXAMINER								

REMARKS

Examiner	Examiner	Reviewer	Page
W D Purdy		Wesley J Riley	
Level II Date 10/30-11/4/02	Level ___ Date ___	Level III Date 4/10/03	___ of ___
P-Scan Limited			

4/00

AUTOMATED ULTRASONIC P-SCAN CALIBRATION SHEET

03-41

LOCATION: 200 EAST TANK FARM	SYSTEM: AP-101 Riser 31	CALIBRATION BLOCK: Notch Block	584-99-30-146
PROCEDURE: CDGEMA-SWUT-INS-007.3 Rev 1		THICKNESS: 1.0"	MATERIAL: C/S.
UT SYSTEM: PSP-4	SERIAL #: 201/206	REFERENCE BLOCK: N/A	
SOFTWARE VERSION: P-Scan Sys 4 1.3	REV.: 2	THICKNESS: N/A	MATERIAL: N/A
LINEARITY DUE DATE: 1-17-03		REFERENCE BLOCK TEMP: Amb. °F	PYRO SN: N/A
SCANNER TYPE: AWS-Sd	SERIAL #	COUPLANT: H_2O	BATCH #: N/A
SCANNER CABLE: COAX		CABLE LENGTH: 80 FT	CABLE #
SIGNAL CABLE: COAX		CABLE LENGTH: 80 FT	CABLE #

CHANNEL	TRANSDUCER MAKE	MODEL	FREQ. MHz	SIZE	SERIAL #	GATE EVAL METHOD	ANGLE NOM./ACT.	WEDGE TYPE	IMAGE
1	KB	MWB	4	8x9mm	3143		45		
2	KB	MWB	4	8x9mm	3133		45		
3									
4									

	INITIAL CALIBRATION	CALIBRATION CHECKS							
DATE		11/5/02	11/5/02	11/6/02	11/6/02	11/6/02	11/6/02	11/7/02	11/7/02
TIME		0820	1455	0820	1252	1330	1945	0840	1510
REFLECTOR / ORRIENTATION		Notch 050"	Notch 050"	Notch 050"	Notch 050"	Notch 050"	Notch 050"	Notch 050"	Notch 050"
CH. 1	AMPLITUDE	80%/0dB	80%/0dB	80%/0dB	80%/1dB	80%/0dB	80%/1dB	80%/0dB	80%/0dB
	LOCATION	1.414	1.414	1.414	1.417	1.414	1.414	1.414	1.414
CH. 2	AMPLITUDE	80%/0dB	80%/1dB	80%/0dB	80%/2dB	80%/0dB	80%/1dB	80%/0dB	80%/0dB
	LOCATION	1.414	1.414	1.414	1.417	1.414	1.414	1.414	1.411
CH. 3	AMPLITUDE								
	LOCATION								
CH. 4	AMPLITUDE								
	LOCATION								
FILE #									
EXAMINER									

REMARKS

Examiner: W B Randy Level II Date 11/5-7/02 P-Scan Limited	Examiner Level ___ Date ___	Reviewer Level WS Date 4/17/03	Page ___ of ___

4/00

AUTOMATED ULTRASONIC P-SCAN CALIBRATION SHEET

03-41

LOCATION: 200 EAST TANK FARM	SYSTEM: AP-101 Riser 31	CALIBRATION BLOCK: Notch Block	584-99-30-146
PROCEDURE: CDGEMA-SWUT-INS-007.3 Rev 1		THICKNESS: 1.0"	MATERIAL: C/S.
UT SYSTEM: PSP-4	SERIAL #: 201/206	REFERENCE BLOCK: N/A	
SOFTWARE VERSION: P-Scan Sys 4 1.3	REV.: 2	THICKNESS: N/A	MATERIAL: N/A
LINEARITY DUE DATE: 1-17-03		REFERENCE BLOCK TEMP: Amb. °F	PYRO SN: N/A
SCANNER TYPE: AWS-5d	SERIAL #:	COUPLANT: H_2O	BATCH #: N/A
SCANNER CABLE: COAX		CABLE LENGTH: 80 FT	CABLE #:
SIGNAL CABLE: COAX		CABLE LENGTH: 80 FT	CABLE #:

CHANNEL	TRANSDUCER MAKE	MODEL	FREQ. MHz	SIZE	SERIAL #	GATE EVAL METHOD	ANGLE NOM./ACT.	WEDGE TYPE	IMAGE
1	KB	MWB	4	8x9mm	3143		45		
2	KB	MWB	4	8x9mm	3133		45		
3									
4									

	INITIAL CALIBRATION	CALIBRATION CHECKS							
DATE	11/11/02	11/11/02	11/12/02	11/12/02	11/13/02	11/13/02	11/13/02	11/13/02
TIME	0720	1525	0740	1522	0725	1735	1855	2110
REFLECTOR / ORRIENTATION	Notch .050"	Notch .050"	Notch .050"	Notch .050"	Notch .050"	Notch .050"	Notch .050"	Notch .050"
CH. 1 AMPLITUDE	80%/0dB	80%/0dB	80%/0dB	80%/1dB	80%/0dB	80%/0dB	80%/0dB	80%/0dB
CH. 1 LOCATION	1.414	1.417	1.414	1.411	1.414	1.414	1.414	1.411
CH. 2 AMPLITUDE	80%/0dB	80%/1dB	80%/0dB	80%/1dB	80%/0dB	80%/1dB	80%/0dB	80%/0dB
CH. 2 LOCATION	1.414	1.414	1.414	1.414	1.414	1.414	1.414	1.414
CH. 3 AMPLITUDE								
CH. 3 LOCATION								
CH. 4 AMPLITUDE								
CH. 4 LOCATION								
FILE #								
EXAMINER								

REMARKS

Examiner	Examiner	Reviewer	Page
WD Purdy		[signature]	
Level II Date 11/11-13/02	Level ___ Date ___	Level ___ Date 4/17/03	___ of ___
P-Scan Limited			

4/00

AUTOMATED ULTRASONIC P-SCAN
CALIBRATION SHEET

03-41

LOCATION: 200 EAST TANK FARM	SYSTEM: AP-101 Riser 31	CALIBRATION BLOCK: Notch Block	584-99-30-146
PROCEDURE: CDGEMA-SNUT-INS-0073 Rev 1		THICKNESS: 1.0"	MATERIAL: C/S.
UT SYSTEM: PSP-4	SERIAL #: 201/206	REFERENCE BLOCK: N/A	
SOFTWARE VERSION: P-Scan SYS 4 1.3	REV.: 2	THICKNESS: N/A	MATERIAL: N/A
LINEARITY DUE DATE: 1-17-03		REFERENCE BLOCK TEMP: Amb. °F	PYRO SN: N/A
SCANNER TYPE: AWS-5d	SERIAL #	COUPLANT: H_2O	BATCH #: N/A
SCANNER CABLE: COAX		CABLE LENGTH: 80 FT	CABLE #
SIGNAL CABLE: COAX		CABLE LENGTH: 80 FT	CABLE #

CHANNEL	TRANSDUCER MAKE	MODEL	FREQ. MHz	SIZE	SERIAL #	GATE EVAL METHOD	ANGLE NOM./ACT.	WEDGE TYPE	IMAGE
1	KB	MWB	4	8x9mm	3143		45		DATA
2	KB	MWB	4	8x9mm	3133		45		SIZE
3									
4									

INITIAL CALIBRATION			CALIBRATION CHECKS						
DATE		12/18/02	12/18/02						
TIME		1405	2215						
REFLECTOR / ORRIENTATION		Notch .050"	Notch .050"						
CH. 1	AMPLITUDE	80%/0dB	80%/0dB						
	LOCATION	1.413	1.402						
CH. 2	AMPLITUDE	80%/0dB	80%/-2dB						
	LOCATION	1.413	1.411						
CH. 3	AMPLITUDE								
	LOCATION								
CH. 4	AMPLITUDE								
	LOCATION								
FILE #									
EXAMINER		WHN	WHN						

REMARKS

Examiner	Examiner	Reviewer	Page
Wesley H. Nee			
Level WS Date 12/18/02	Level ___ Date ___	Level ___ Date ___	___ of ___

4/00

AUTOMATED ULTRASONIC P-SCAN CALIBRATION SHEET

03-41

LOCATION: 200 EAST TANK FARM	SYSTEM: AP-101 Riser 31	CALIBRATION BLOCK: Notch Block	584-99-30-146
PROCEDURE: CDGEMA-SNUT-INS-007.3 Rev 1		THICKNESS: 1.0"	MATERIAL: C/S.
UT SYSTEM: PSP-4	SERIAL #: 201/206	REFERENCE BLOCK: N/A	
SOFTWARE VERSION: P-Scan Sys 4 1.3	REV.: 2	THICKNESS: N/A	MATERIAL: N/A
LINEARITY DUE DATE: 1-17-03		REFERENCE BLOCK TEMP: Amb. °F	PYRO SN: N/A
SCANNER TYPE: AWS-5d	SERIAL #	COUPLANT: H_2O	BATCH #: N/A
SCANNER CABLE: COAX		CABLE LENGTH: 80 FT	CABLE #
SIGNAL CABLE: COAX		CABLE LENGTH: 80 FT	CABLE #

CHANNEL	TRANSDUCER MAKE	MODEL	FREQ. MHz	SIZE	SERIAL #	GATE EVAL METHOD	ANGLE NOM./ACT.	WEDGE TYPE	IMAGE DATA SEE ATTACH
1	KB	MWB	4	8x8mm	3107		60		
2	KB	MWB	4	8x8mm	3111		60		
3									
4									

		INITIAL CALIBRATION	CALIBRATION CHECKS						
DATE		1/6/03	1/6/03	1/7/03	1/7/03	1/8/03	1/8/03	1/9/03	1/9/03
TIME		0940	2035	0825	1340	0840	2000	0845	1400
REFLECTOR / ORRIENTATION		Notch .050"	Notch .050"	Notch .050"	Notch .050"	Notch .050"	Notch .050"	Notch .050"	Notch .050"
CH. 1	AMPLITUDE	80%/0dB	80%/1dB	80%/0dB	80%/1dB	80%/0dB	80%/2dB	80%/0dB	80%/1dB
	LOCATION	2.002	1.993	1.999	1.998	1.999	1.999	1.999	2.004
CH. 2	AMPLITUDE	80%/0dB	80%/1dB	80%/0dB	80%/0dB	80%/0dB	80%/2dB	80%/0dB	80%/1dB
	LOCATION	1.999	1.981	1.999	2.004	1.999	1.995	1.999	1.999
CH. 3	AMPLITUDE								
	LOCATION								
CH. 4	AMPLITUDE								
	LOCATION								
FILE #									
EXAMINER									

REMARKS

Examiner: W D Purdy Level II Date 1/6-9/03 P-Scan Limited.	Examiner Level ___ Date ___	Reviewer: Wesley D Nu Level III Date 4/17/03	Page ___ of ___

4/00

AUTOMATED ULTRASONIC P-SCAN CALIBRATION SHEET

03-41

LOCATION: 200 EAST TANK FARM	SYSTEM: AP-101 Riser 31	CALIBRATION BLOCK: Notch Block	584-99-30-146
PROCEDURE: CDGEMA-SVUT-INS-007.3 Rev 1		THICKNESS: 1.0"	MATERIAL: C/S.
UT SYSTEM: PSP 4	SERIAL #: 201/206	REFERENCE BLOCK: N/A	
SOFTWARE VERSION: P-Scan Sys 4 1.3	REV.: 2	THICKNESS: N/A	MATERIAL: N/A
LINEARITY DUE DATE: 1-17-03		REFERENCE BLOCK TEMP: Amb. °F	PYRO SN: N/A
SCANNER TYPE: AWS-5d	SERIAL #	COUPLANT: H_2O	BATCH #: N/A
SCANNER CABLE: COAX		CABLE LENGTH: 80 FT	CABLE #
SIGNAL CABLE: COAX		CABLE LENGTH: 80 FT	CABLE #

CHANNEL	TRANSDUCER MAKE	MODEL	FREQ. MHz	SIZE	SERIAL #	GATE EVAL METHOD	ANGLE NOM.ACT.	WEDGE TYPE	IMAGE
1	KB	MWB	4	8x9mm	3127		45		DATA
2	KB	MWB	4	8x9mm	3121		45		SEE
3	KB	MWB	4	8x9mm	3024		45		NOTE
4	KB	MWB	4	8x9mm	3137		45		17

		INITIAL CALIBRATION	CALIBRATION CHECKS						
DATE		1/13/03	1/13/03	1/13/03	1/13/03	1/14/03	1/14/03	1/14/03	1/15/03
TIME		1015	1445	1505	2015	0810	1410	0815	1945
REFLECTOR / ORRIENTATION		Notch .050"	Notch .050"	Notch .050"	Notch .050"	Notch .050"	Notch .050"	Notch .050"	Notch .050"
CH. 1	AMPLITUDE	80%/0dB	80%/0dB	80%/0dB	80%/0dB	80%/0dB	80%/-1dB	80%/0dB	80%/-1dB
	LOCATION	1.414	1.411	1.414	1.414	1.414	1.414	1.414	1.411
CH. 2	AMPLITUDE	80%/0dB	80%/0dB	80%/0dB	80%/-2dB	80%/0dB	80%/-1dB	80%/0dB	80%/-1dB
	LOCATION	1.414	1.411	1.414	1.411	1.414	1.411	1.414	1.414
CH. 3	AMPLITUDE	80%/0dB	80%/0dB	80%/0dB	80%/-2dB	80%/0dB	80%/0dB	80%/0dB	80%/0dB
	LOCATION	1.414	1.414	1.414	1.411	1.414	1.411	1.414	1.414
CH. 4	AMPLITUDE	80%/0dB	80%/0dB	80%/0dB	80%/-2dB	80%/0dB	80%/0dB	80%/0dB	80%/-1dB
	LOCATION	1.414	1.414	1.414	1.408	1.414	1.414	1.414	1.414
FILE #									
EXAMINER									

REMARKS

Examiner	Examiner	Reviewer	Page
W D Pandy		Wesley H Pike	
Level II Date 1/13-15/03	Level ___ Date ___	Level III Date 4/17/03	___ of ___
P-Scan Limited			

4/00

AUTOMATED ULTRASONIC P-SCAN CALIBRATION SHEET

03-41

LOCATION: 200 EAST TANK FARM	SYSTEM: AP-101 Riser 31	CALIBRATION BLOCK: Notch Block	584-99-30-146
PROCEDURE: LOGEMA-SVUT-INS-007.3 REV 1		THICKNESS: 1.0"	MATERIAL: C/S
UT SYSTEM: PSP-4	SERIAL #: 201/206	REFERENCE BLOCK: N/A	
SOFTWARE VERSION: P-Scan SYS4 1.3	REV.: 2	THICKNESS: N/A	MATERIAL: N/A
LINEARITY DUE DATE: 4/17/03		REFERENCE BLOCK TEMP: Amb °F	PYRO SN: N/A
SCANNER TYPE: AWS-5d	SERIAL #:	COUPLANT: H_2O	BATCH #: N/A
SCANNER CABLE: COAX		CABLE LENGTH: 80 FT	CABLE #:
SIGNAL CABLE: COAX		CABLE LENGTH: 80 FT	CABLE #:

CHANNEL	TRANSDUCER MAKE	MODEL	FREQ. MHZ	SIZE	SERIAL #	GATE EVAL METHOD	ANGLE NOM./ACT.	WEDGE TYPE	IMAGE
1	KB	MWB	4	819AM	3111		60		DATA
2	KB	MWB	4	819AM	3107		60		SEE
3									MET
4									

INITIAL CALIBRATION			CALIBRATION CHECKS						
DATE		3/13/03	3/13/03						
TIME		0820	1342						
REFLECTOR / ORRIENTATION		Notch .050"	Notch .050"						
CH. 1	AMPLITUDE	80%/0dB	80%/-1dB						
	LOCATION	2.001	1.999						
CH. 2	AMPLITUDE	80%/0dB	80%/2dB						
	LOCATION	1.999	1.996						
CH. 3	AMPLITUDE								
	LOCATION								
CH. 4	AMPLITUDE								
	LOCATION								
FILE #									
EXAMINER		WHD	WHD.						

REMARKS

Examiner	Examiner	Reviewer	Page
Wesley H. Dee			
Level III Date 3/13/03	Level ___ Date ___	Level ___ Date ___	___ of ___

4/00

AUTOMATED ULTRASONIC THICKNESS CALIBRATION SHEET

Job # 03-41

LOCATION: 200 EAST TANK FARM	SYSTEM: AP-101 Riser 31	CALIBRATION BLOCK: Step Block 584-99-30-145	
PROCEDURE: COGEMA-SVUT-INS-007.3 Rev 1		THICKNESS: .3" – 1.0"	MATERIAL: C/S.
UT SYSTEM: PSR 4	SERIAL #: 206	REFERENCE BLOCK: N/A	
SOFTWARE VERSION: P-Scan SV4 4 1.3	REV.: 2	THICKNESS: N/A	MATERIAL: N/A
LINEARITY DUE DATE: 1-17-03		REFERENCE BLOCK TEMP: Amb °F	PYRO SN.: N/A
SCANNER TYPE: AWS-Sd	SERIAL #	COUPLANT: H_2O	BATCH #: N/A
SCANNER CABLE: COAX		CABLE LENGTH: 80 FT	CABLE #
SIGNAL CABLE: COAX		CABLE LENGTH: 80 FT	CABLE #

CHANNEL	TRANSDUCER MAKE	MODEL	FREQ. MHZ	SIZE	SERIAL #	GATE EVAL METHOD	ANGLE	WEDGE TYPE	IMAGE
1	KB	MSEB	5	8x2 MM	01934		0		DATA / SUM / SET
2									
3									
4									

INITIAL CALIBRATION		CALIBRATION CHECKS							
DATE		10/30/02	10/30/02	10/31/02	10/31/02	11/1/02	11/1/02	11/4/02	11/4/02
TIME		0810	1619	0815	1545	0845	1322	0850	1545
REFLECTOR		.3"-1.0"	.3"-1.0"	.3"-1.0"	.3"-1.0"	.3"-1.0"	.3"-1.0"	.3"-1.0"	.3"-1.0"
CH. 1	THK.1	.301	.301	.301	.304	.301	.301	.304	.307
	THK. 2	.999/0dB	.993/1dB	.999/0dB	1.004/2dB	.999/0dB	.999/0dB	.999/0dB	1.002/0dB
CH. 2	THK.1	.301	.301	.304	.304	.301	.301	.304	.304
	THK. 2	.999/0dB	.996/0dB	.999/0dB	1.002/2dB	.999/0dB	.999/0dB	.999/0dB	.999/0dB
CH. 3	THK.1	.301	.301	.304	.304	.301	.301	.304	.304
	THK. 2	.999/0dB	.996/0dB	.999/0dB	1.004/2dB	.999/0dB	.999/0dB	.999/0dB	.999/0dB
CH. 4	THK.1								
	THK. 2								
FILE #									
EXAMINER									

REMARKS

Examiner	Examiner	Reviewer	Page
W D Purdy		[signature]	___ of ___
Level II Date 10/30-11/4/02	Level ___ Date ___	Level III Date 4/17/03	
P-Scan Limited			

4/00

AUTOMATED ULTRASONIC THICKNESS CALIBRATION SHEET

Job # 03-41

LOCATION: 200 EAST TANK FARM	SYSTEM: AP-101 Riser 31	CALIBRATION BLOCK: Step Block	584-99-30-145
PROCEDURE: COGEMA-SVUT-INS-007.3 Rev 1		THICKNESS: .3" – 1.0"	MATERIAL: C/S.
UT SYSTEM: PSR-4	SERIAL #: 206	REFERENCE BLOCK: N/A	
SOFTWARE VERSION: P-Scan SW4 4 1.3	REV.: 2	THICKNESS: N/A	MATERIAL: N/A
LINEARITY DUE DATE: 1-17-03		REFERENCE BLOCK TEMP: Amb °F	PYRO SN: N/A
SCANNER TYPE: AWS-Sd	SERIAL #	COUPLANT: H_2O	BATCH #: N/A
SCANNER CABLE: COAX		CABLE LENGTH: 80 FT	CABLE #
SIGNAL CABLE: COAX		CABLE LENGTH: 80 FT	CABLE #

CHANNEL	TRANSDUCER MAKE	MODEL	FREQ. MHZ	SIZE	SERIAL #	GATE EVAL METHOD	ANGLE	WEDGE TYPE	IMAGE
1	KB	MSEB	5	8x2mm	01934		Ø		DATA SET
2									
3									
4									

INITIAL CALIBRATION		CALIBRATION CHECKS *							
DATE		11/5/02	11/5/02	11/6/02	11/6/02	11/6/02	11/6/02	11/7/02	11/7/02
TIME		0815	1445	0810	1247	1320	1940	0830	1500
REFLECTOR		.3"-1.0"	.3"-1.0"	.3"-1.0"	.3"-1.0"	.3"-1.0"	.3"-1.0"	.3"-1.0"	.3"-1.0"
CH. 1	THK.1	.301	.301	.301	.310	.301	.301	.301	.301
	THK. 2	.999/0dB	.999/1dB	.999/0dB	1.007/1dB	.999/0dB	.999/0dB	.999/0dB	.999/0dB
CH. 2	THK.1	.304	.304	.301	.310	.304	.304	.301	.301
	THK. 2	.999/0dB	.999/1dB	.999/0dB	1.007/1dB	.999/0dB	.999/0dB	.999/0dB	1.002/0dB
CH. 3	THK.1	.304	.304	.304	.310	.304	.304	.301	.301
	THK. 2	.999/0dB	.999/1dB	.999/0dB	1.007/1dB	.999/0dB	.999/0dB	.999/0dB	.999/0dB
CH. 4	THK.1								
	THK. 2								
FILE #									
EXAMINER									

REMARKS

* Plate 3

Examiner	Examiner	Reviewer	Page
W D Purdy		[signature]	___ of ___
Level II Date 11/6-11/7/02	Level ___ Date ___	Level ~~IIA~~ Date 4/17/03	
P-Scan Limited			

4/00

AUTOMATED ULTRASONIC THICKNESS CALIBRATION SHEET

Job # 03-41

LOCATION: 200 EAST TANK FARM	SYSTEM: AP-101 Riser 31	CALIBRATION BLOCK: Step Block 584-99-30-145	
PROCEDURE: COGEMA-SVUT-INS-007.3 Rev 1		THICKNESS: .3" – 1.0"	MATERIAL: C/S.
UT SYSTEM: PSR 4	SERIAL #: 206	REFERENCE BLOCK: N/A	
SOFTWARE VERSION: P-Scan SVU 4 1.3	REV.: 2	THICKNESS: N/A	MATERIAL: N/A
LINEARITY DUE DATE: 1-17-03		REFERENCE BLOCK TEMP: Amb °F	PYRO SN: N/A
SCANNER TYPE: AWS-5d	SERIAL #:	COUPLANT: H_2O	BATCH #: N/A
SCANNER CABLE: COAX		CABLE LENGTH: 80 FT	CABLE #:
SIGNAL CABLE: COAX		CABLE LENGTH: 80 FT	CABLE #:

CHANNEL	TRANSDUCER MAKE	MODEL	FREQ. MHZ	SIZE	SERIAL #	GATE EVAL METHOD	ANGLE	WEDGE TYPE	IMAGE
1	KB	MSEB	5	8x12mm	01934		Ø		DATA SET SEE
2									
3									
4									

INITIAL CALIBRATION		CALIBRATION CHECKS							
DATE		11/11/02	11/11/02	11/12/02	11/12/02	11/13/02	11/13/02	11/13/02	11/13/02
TIME		0710	1520	0725	1515	0710	1730	1850	2105
REFLECTOR		.3"-1.0"	.3"-1.0"	.3"-1.0"	.3"-1.0"	.3"-1.0"	.3"-1.0"	.3"-1.0"	.3"-1.0"
CH. 1	THK.1	.301	.304	.301	.295	.301	.298	.301	.298
	THK. 2	.999/0dB	1.002/0dB	.999/0dB	.996/0dB	.999/0dB	.996/-1dB	.999/0dB	.996/0dB
CH. 2	THK.1	.304	.307	.301	.298	.301	.298	.301	.298
	THK. 2	.999/0dB	1.002/0dB	.999/0dB	.996/0dB	.999/0dB	.996/-1dB	.999/0dB	.996/0dB
CH. 3	THK.1	.304	.310	.301	.298	.301	.298	.301	.298
	THK. 2	.999/0dB	1.004/0dB	.999/0dB	.996/0dB	.999/0dB	.996/-1dB	.999/0dB	.996/0dB
CH. 4	THK.1								
	THK. 2								
FILE #									
EXAMINER									

REMARKS

Examiner	Examiner	Reviewer	Page
W D Purdy		[signature]	___ of ___
Level II Date 11/11-11/13/02	Level ___ Date ___	Level ~~II~~ III Date 4/17/03	
P-Scan Limited			

4/00

AUTOMATED ULTRASONIC THICKNESS CALIBRATION SHEET

03-41

LOCATION: 200 EAST TANK FARM	SYSTEM: AP-101 Riser 31	CALIBRATION BLOCK: Step Block	584-99-30-145
PROCEDURE: COGEMA-SVUT-INS-007.3 Rev 1		THICKNESS: .3" - 1.0"	MATERIAL: C/S.
UT SYSTEM: PSP-4	SERIAL #: 201/206	REFERENCE BLOCK: N/A	
SOFTWARE VERSION: P-SCAN SYS. 4 1.3	REV.: 2	THICKNESS: N/A	MATERIAL: N/A
LINEARITY DUE DATE: 1/17/03		REFERENCE BLOCK TEMP: Amb. °F	PYRO SN: N/A
SCANNER TYPE: AWS 5d	SERIAL #	COUPLANT: H_2O	BATCH #: N/A
SCANNER CABLE: COAX		CABLE LENGTH: 80 FT	CABLE #
SIGNAL CABLE: COAX		CABLE LENGTH: 80 FT	CABLE #

CHANNEL	TRANSDUCER MAKE	MODEL	FREQ. MHz	SIZE	SERIAL #	GATE EVAL METHOD	ANGLE	WEDGE TYPE	IMAGE
1	KB	MSEB	5	8x2mm	01934		Ø		
2									
3									
4									

INITIAL CALIBRATION		CALIBRATION CHECKS							
DATE		12/12/02	12/12/02	12/18/02	12/18/02				
TIME		0930	1100	0800	1350				
REFLECTOR		.3-1.0"	.3-1.0"	.3-1.0"	.3-1.0"				
CH. 1	THK.1	.301	.307	.302	.302				
	THK. 2	.999/0dB	1.005/0dB	1.001/0dB	1.001/1dB				
CH. 2	THK.1	.304	.307	.302	.302				
	THK. 2	1.000/0dB	1.010/0dB	1.001/0dB	1.001/0dB				
CH. 3	THK.1	.301	.307	.302	.302				
	THK. 2	1.000/0dB	1.005/1dB	1.001/0dB	1.001/0dB				
CH. 4	THK.1								
	THK. 2								
FILE #									
EXAMINER		WHD	WHD	WHD.	WHD				

REMARKS

Examiner	Examiner	Reviewer	Page
Wesley H. Dye			___ of ___
Level WD Date 12/12/02	Level ___ Date ___	Level ___ Date ___	

4/00

AUTOMATED ULTRASONIC THICKNESS CALIBRATION SHEET

03-41

LOCATION: 200 EAST TANK FARM	SYSTEM: AP-101 Riser-31	CALIBRATION BLOCK: Step Block 584-99-30-145	
PROCEDURE: COGEMA-SVUT-INS-007.3 Rev 1		THICKNESS: .3" - 1.0"	MATERIAL: C/S.
UT SYSTEM: PSP-4	SERIAL #: 201/206	REFERENCE BLOCK: N/A	
SOFTWARE VERSION: P-SCAN SYS. 4 1.3	REV.: 2	THICKNESS: N/A	MATERIAL: N/A
LINEARITY DUE DATE: 1/17/03		REFERENCE BLOCK TEMP: Amb. °F.	PYRO SN: N/A
SCANNER TYPE: AWS 5d	SERIAL #	COUPLANT: H_2O	BATCH #: N/A
SCANNER CABLE: COAX		CABLE LENGTH: 80 FT	CABLE #
SIGNAL CABLE: COAX		CABLE LENGTH: 80 FT	CABLE #

CHANNEL	TRANSDUCER MAKE	MODEL	FREQ. MHZ	SIZE	SERIAL #	GATE EVAL METHOD	ANGLE	WEDGE TYPE	IMAGE
1	KB	MSEB	5	8x2mm	01938		Ø		DATA SET
2	KB	MSEB	5	8x2mm	01929		Ø		
3									
4									

INITIAL CALIBRATION		CALIBRATION CHECKS							
DATE		1/6/03	1/6/03	1/6/03	1/6/03	1/7/03	1/7/03	1/7/03	1/7/03
TIME		0905	0915	2025	2032	0810	0815	1325	1330
REFLECTOR		.3-1.0"	.3-1.0"	.3-1.0"	.3-1.0"	.3-1.0"	.3-1.0"	.3-1.0"	.3-1.0"
CH. 1	THK.1	.301	.304	.292	.298	.304	.304	.289	.301
	THK. 2	.999/0dB	.999/0dB	.990/1dB	.996/1dB	.999/0dB	.999/0dB	.993/-1dB	.996/0dB
CH. 2	THK.1	.301	.304	.292	.301	.304	.304	.292	.304
	THK. 2	.999/0dB	.999/0dB	.993/1dB	.999/1dB	.999/0dB	.999/0dB	.990/-1dB	.999/0dB
CH. 3	THK.1	.301	.304	.292	.298	.304	.304	.292	.304
	THK. 2	.999/0dB	.999/0dB	.996/2dB	.996/1dB	.999/0dB	.999/0dB	.993/-1dB	.999/0dB
CH. 4	THK.1								
	THK. 2								
FILE #									
EXAMINER									

REMARKS

Examiner: W Dandy Level II Date 1/6-7/03 P-Scan Limited	Examiner: _____ Level ___ Date _____	Reviewer: [signature] Level ___ Date 4/17/03	Page ___ of ___

4/00

AUTOMATED ULTRASONIC THICKNESS CALIBRATION SHEET

03-41

LOCATION: 200 EAST TANK FARM	SYSTEM: AP-101 Riser 31	CALIBRATION BLOCK: Step Block	584-99-30-145
PROCEDURE: COGEMA-SVUT-INS-007.3 Rev 1		THICKNESS: .3" - 1.0"	MATERIAL: C/S.
UT SYSTEM: PSP-4	SERIAL #: 201/206	REFERENCE BLOCK: N/A	
SOFTWARE VERSION: P-Scan Sys. 4 1.3	REV. 2	THICKNESS: N/A	MATERIAL: N/A
LINEARITY DUE DATE: 1/17/03		REFERENCE BLOCK TEMP: Amb. °F	PYRO SN: N/A
SCANNER TYPE: AWS 5d	SERIAL #	COUPLANT: H_2O	BATCH #: N/A
SCANNER CABLE: COAX		CABLE LENGTH: 80 FT	CABLE #
SIGNAL CABLE: COAX		CABLE LENGTH: 80 FT	CABLE #

CHANNEL	TRANSDUCER MAKE	MODEL	FREQ. MHZ	SIZE	SERIAL #	GATE EVAL METHOD	ANGLE	WEDGE TYPE	IMAGE
1	KB	MSEB	5	8x2mm	01938		Ø		
2	KB	MSEB	5	8x2mm	01929		Ø		
3									
4									

INITIAL CALIBRATION		CALIBRATION CHECKS							
DATE		1/8/03	1/8/03	1/8/03	1/8/03	1/9/03	1/9/03	1/9/03	1/9/03
TIME		0825	0830	1950	1950	0830	0835	1345	1350
REFLECTOR		.3-1.0"	.3-1.0"	.3-1.0"	.3-1.0"	.3-1.0"	.3-1.0"	.3-1.0"	.3-1.0"
CH. 1	THK.1	.304	.304	.298	.301	.304	.304	.304	.304
	THK. 2	.999/0dB	.999/0dB	.990/0dB	.996/0dB	.999/0dB	.999/0dB	.999/0dB	.999/0dB
CH. 2	THK.1	.304	.304	.301	.301	.304	.304	.304	.307
	THK. 2	.999/0dB	.999/0dB	.996/0dB	.996/0dB	.999/0dB	.999/0dB	.999/0dB	1.002/0dB
CH. 3	THK.1	.304	.304	.301	.298	.304	.304	.304	.304
	THK. 2	.999/0dB	.999/0dB	.996/0dB	.996/0dB	.999/0dB	.999/0dB	.999/1dB	.999/0dB
CH. 4	THK.1								
	THK. 2								
FILE #									
EXAMINER									

REMARKS

Examiner	Examiner	Reviewer	Page
W D Purdy		Wesley H Nelson	___ of ___
Level II Date 1/8-9/03	Level ___ Date ___	Level III Date 4/17/03	
P-Scan Limited			

4/00

AUTOMATED ULTRASONIC THICKNESS CALIBRATION SHEET

03-41

LOCATION: 200 EAST TANK FARM	SYSTEM: AP-101 Riser 31	CALIBRATION BLOCK: Step Block 584-99-30-145	
PROCEDURE: COGEMA-SVUT-INS-007.3 Rev 1		THICKNESS: .3" - 1.0"	MATERIAL: C/S.
UT SYSTEM: PSP-4	SERIAL #: 201/206	REFERENCE BLOCK: N/A	
SOFTWARE VERSION: P-Scan Sys. 4 1.3	REV.: 2	THICKNESS: N/A	MATERIAL: N/A
LINEARITY DUE DATE: 4/17/03		REFERENCE BLOCK TEMP: Amb. °F	PYRO SN: N/A
SCANNER TYPE: AWS 5d	SERIAL #:	COUPLANT: H_2O	BATCH #: N/A
SCANNER CABLE: COAX		CABLE LENGTH: 80 FT	CABLE #:
SIGNAL CABLE: COAX		CABLE LENGTH: 80 FT	CABLE #:

CHANNEL	TRANSDUCER MAKE	MODEL	FREQ. MHZ	SIZE	SERIAL #	GATE EVAL METHOD	ANGLE	WEDGE TYPE	IMAGE
1	KB	MSEB	5	8x2MM	01938		Ø		DATA SAFE SET
2	KB	MSEB	5	8x2MM	01934		Ø		
3									
4									

INITIAL CALIBRATION		CALIBRATION CHECKS							
DATE		3/12/03	3/12/03	3/13/03	3/13/03	3/13/03	3/13/03		
TIME		0958	1845	0925	0934	1333	1338		
REFLECTOR		.3-1.0"	.3-1.0"	.3-1.0"	.3-1.0"	.3-1.0"	.3-1.0"		
CH. 1	THK.1	.302	.298	.302	.299	.299	.299		
	THK. 2	.998/0dB	.996/0dB	1.001/0dB	1.001/0dB	.997/1dB	.997/1dB		
CH. 2	THK.1	.302	.298	.302	.302	.298	.299		
	THK. 2	.998/0dB	.996/0dB	.999/0dB	1.001/0dB	.996/1dB	.997/2dB		
CH. 3	THK.1	.298	.295	.302	.302	.299	.299		
	THK. 2	.998/0dB	.996/0dB	1.001/0dB	1.001/0dB	.997/1dB	.997/1dB		
CH. 4	THK.1								
	THK. 2								
FILE #									
EXAMINER		WHN	WHN	WHN	WHN	WHN	WHN.		

REMARKS

Examiner	Examiner	Reviewer	Page
W. Healey WHN Level WS Date 3/12-13/03	Level ___ Date ___	Level ___ Date ___	___ of ___

4/00

AUTOMATED ULTRASONIC THICKNESS CALIBRATION SHEET

03-41

LOCATION: 200 EAST TANK FARM	SYSTEM: AP-101 Riser 31	CALIBRATION BLOCK: Step Block	584-99-30-145
PROCEDURE: COGEMA-SVUT-INS-007.3 Rev 1		THICKNESS: .3" - 1.0"	MATERIAL: C/S.
UT SYSTEM: PSP-4	SERIAL #: 201/206	REFERENCE BLOCK: N/A	
SOFTWARE VERSION: P-Scan Sys. 4 1.3	REV.: 2	THICKNESS: N/A	MATERIAL: N/A
LINEARITY DUE DATE: 4/17/03		REFERENCE BLOCK TEMP: Amb. °F	PYRO SN: N/A
SCANNER TYPE: AWS 5d	SERIAL #:	COUPLANT: H_2O	BATCH #: N/A
SCANNER CABLE: COAX		CABLE LENGTH: 80 FT	CABLE #:
SIGNAL CABLE: COAX		CABLE LENGTH: 80 FT	CABLE #:

CHANNEL	TRANSDUCER MAKE	MODEL	FREQ. MHZ	SIZE	SERIAL #	GATE EVAL METHOD	ANGLE	WEDGE TYPE	IMAGE
1	KB	MSEB	5	8x2mm	01934		Ø		DATA / SET / SEE
2									
3									
4									

INITIAL CALIBRATION		CALIBRATION CHECKS							
DATE		3/17/03	3/17/03	3/18/03	3/18/03				
TIME		0920	2130	0815	1035				
REFLECTOR		.3-1.0"	.3-1.0"	.3-1.0"	.3-1.0"				
CH. 1	THK.1	.301	.298	.304	.301				
	THK. 2	.999/0dB	.993/2dB	.999/0dB	.999/0dB				
CH. 2	THK.1	.304	.295	.304	.304				
	THK. 2	.999/0dB	.993/2dB	.999/0dB	.999/0dB				
CH. 3	THK.1	.304	.298	.304	.304				
	THK. 2	.999/0dB	.993/2dB	.999/0dB	.999/0dB				
CH. 4	THK.1								
	THK. 2								
FILE #									
EXAMINER									

REMARKS

Examiner	Examiner	Reviewer	Page
W D Purdy	Wesley D Nee	Wesley D Nee	___ of ___
Level II Date 3/17-18/03	Level III Date 4/11/03	Level III Date 4/12/03	
P-Scan Limited			

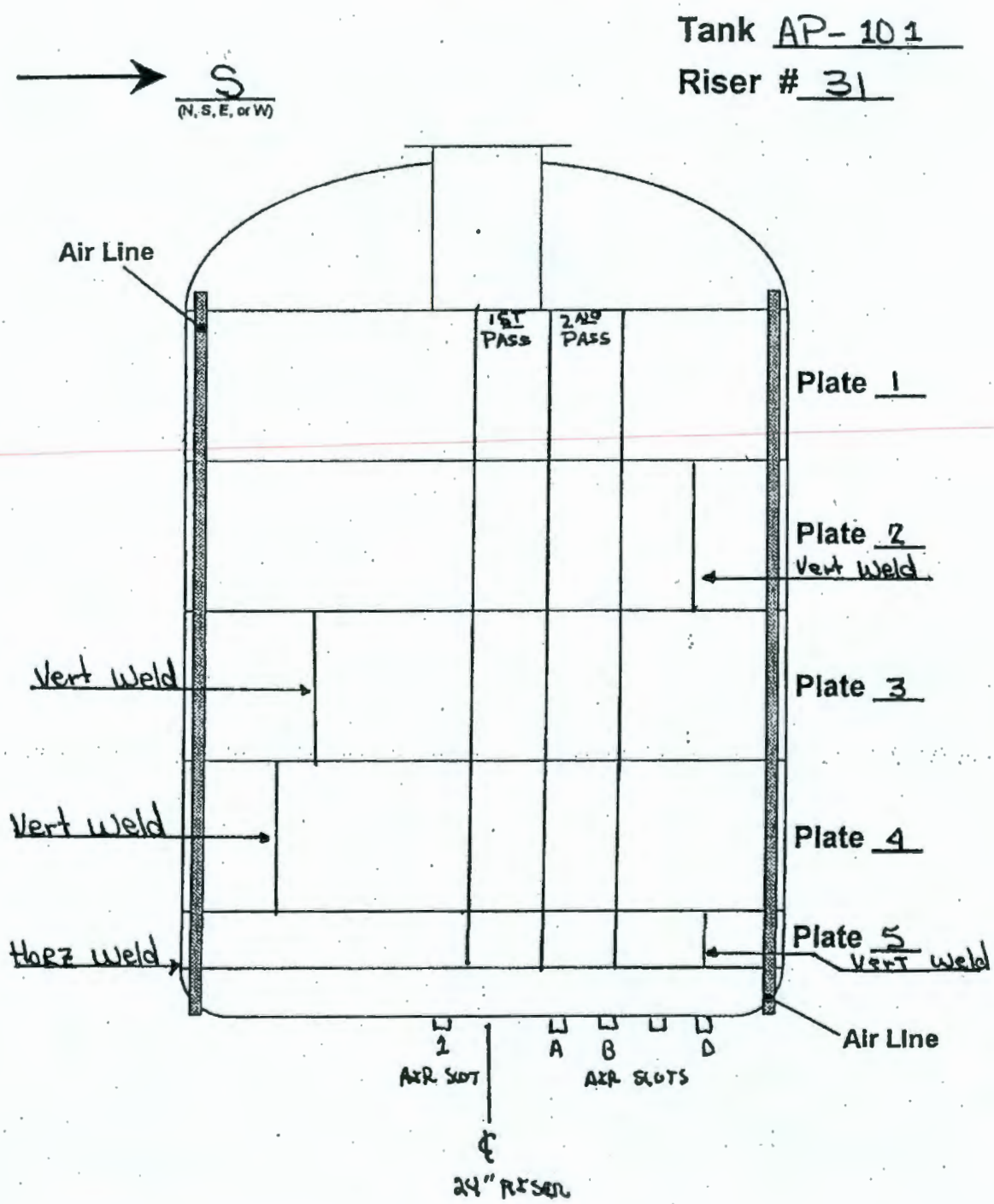
Tank AP-101
Riser # 31
S
(N, S, E, or W)
Air Line
1ST PASS
2ND PASS
Plate 1
Plate 2
Vert Weld
Vert Weld
Plate 3
Vert Weld
Plate 4
Horz Weld
Plate 5
Vert Weld
Air Line
1
A
B
D
AIR SLOT
AIR SLOTS
℄
24" RISER

April 8th. 2003

Mr. Daron Tate
COGEMA Engineering Corp.
2425 Stevens Center
Richland, WA. 99352

This letter is to certify that I have analyzed the P-scan automated ultrasonic data from Hanford waste tank AP 101. The data reviewed for the primary tank wall was collected by Mr. Nelson and Mr. Purdy October 30th. through March 18th. 2003. The data is acceptable. The data from vertical strips, vertical welds, horizontal weld, the primary knuckle examination with the extended Y-arm and 4 slots examined with the extended Y-arm was analyzed to the requirements of COGEMA procedure SVUT-INS-007.3 Revision 1.

There were no reportable indications. No cracking, reportable pitting or other reportable thinning was detected in any of the areas examined.

Sincerely,

James B. Elder
ASNT UT Level III

CC: Mr. W. H. Nelson - COGEMA

ATTACHMENT 4

COGEMA "SAFT/T-SAFT ULTRASONIC DATA REPORT SHEETS"

This page intentionally left blank.

ATTACHMENT 4

COGEMA "SAFT/T-SAFT ULTRASONIC DATA REPORT SHEETS"

10/02

SAFT/T-SAFT ULTRASONIC DATA REPORT

LOCATION: 200 EAST TANK FARM	SYSTEM: TSAFT	EXAM START	EXAM END	JOB#
COMPONENT ID: 101-AP		EXAMINATION SURFACE: ☒ OD ☐ ID		
CONFIGURATION: KNUCKLE			TEMP: AMB	
CIRCUMFERENCE/TOTAL LENGTH EXAMINED: 240"				
PROCEDURE: COGEMA-SNUT-EXX-007.5	REV: a	MATERIAL TYPE: C/S	NOM. THICKNESS	
FILE NAME		TRANSDUCERS (2)	WEDGES	
Y (CIRCUMFERENCE) START POSITION: STARTED @ VERT. WELD NORTH OF 4" RESID		T-SAFT FILE NAME: SEE BELOW		

[redacted]

T-SAFT FILE NO.	Y START	Y STOP	X POSITION	LENGTH	DEPTH	SCANNER X POSITION
1 THRU 24						

REMARKS: NO CRACK LIKE INDICATIONS

EXAMINER	ANALYST	REVIEWER	PAGE
[signature]	[signature]	N/A	
LEVEL ~~II~~ DATE 4/23&26/03	LEVEL ~~II~~ DATE 4/23&26/03	LEVEL ____ DATE ____	___ OF ___

10/02	SAFT/T-SAFT ULTRASONIC CALIBRATION SHEET	
LOCATION: 200 EAST TANK FARM	SYSTEM: WRP ~~108-AW~~	CALIBRATION BLOCK: 584-99-30-150
PROCEDURE: COGEMA-SVUT-INS-007.5	REV: 01-AP Q	THICKNESS: .675" / MATERIAL: C/S
UT SYSTEM: TSAFT	SERIAL #: N/A	REFERENCE BLOCK
SOFTWARE VERSION: SAFT-UT 2002	REV: Q	THICKNESS / MATERIAL
LINEARITY DUE DATE		REFERENCE BLOCK TEMP °F / PYRO SN.
SCANNER TYPE	SERIAL #	COUPLANT: WATER / BATCH #
SCANNER CABLE: CABLE		CABLE LENGTH: 100' / CABLE #
SIGNAL CABLE: COAXIAL		CABLE LENGTH: 100' / CABLE #

TRANSDUCER INFORMATION

TRANSDUCER #	TRANSDUCER MAKE	MODEL	FREQ	SIZE	SERIAL #	WEDGE TYPE	ANGLE
X1	KB	N9SK	3.5MHZ	.5"	W213	HCSTR	70°
X2	KB	N9SK	3.5MHZ	.5"	W243	HCSTR	70°

CALIBRATION CHECKS

DATE	CAL IN	CAL OUT	END OF BLOCK	NOTCH	DIFF	AMPLITUDE	DIFF	FILE NAME
4/23	0605		3.8	1.8	2.0	114		CAL 4280606
4/23		2045	3.8	1.8	2.0	142	1.9	CAL 4230320445
4/24	0642		3.85	1.90	1.95	135		CAL 4280642
4/24		2000	3.8	1.8	2.0	186	3.7	CAL 4240320000

REMARKS

EXAMINER	EXAMINER	REVIEWER	PAGE
[signature]	[signature]	N/A	
LEVEL II DATE 4/23/03	LEVEL II DATE 4/24/03	LEVEL ____ DATE ____	___ OF ___

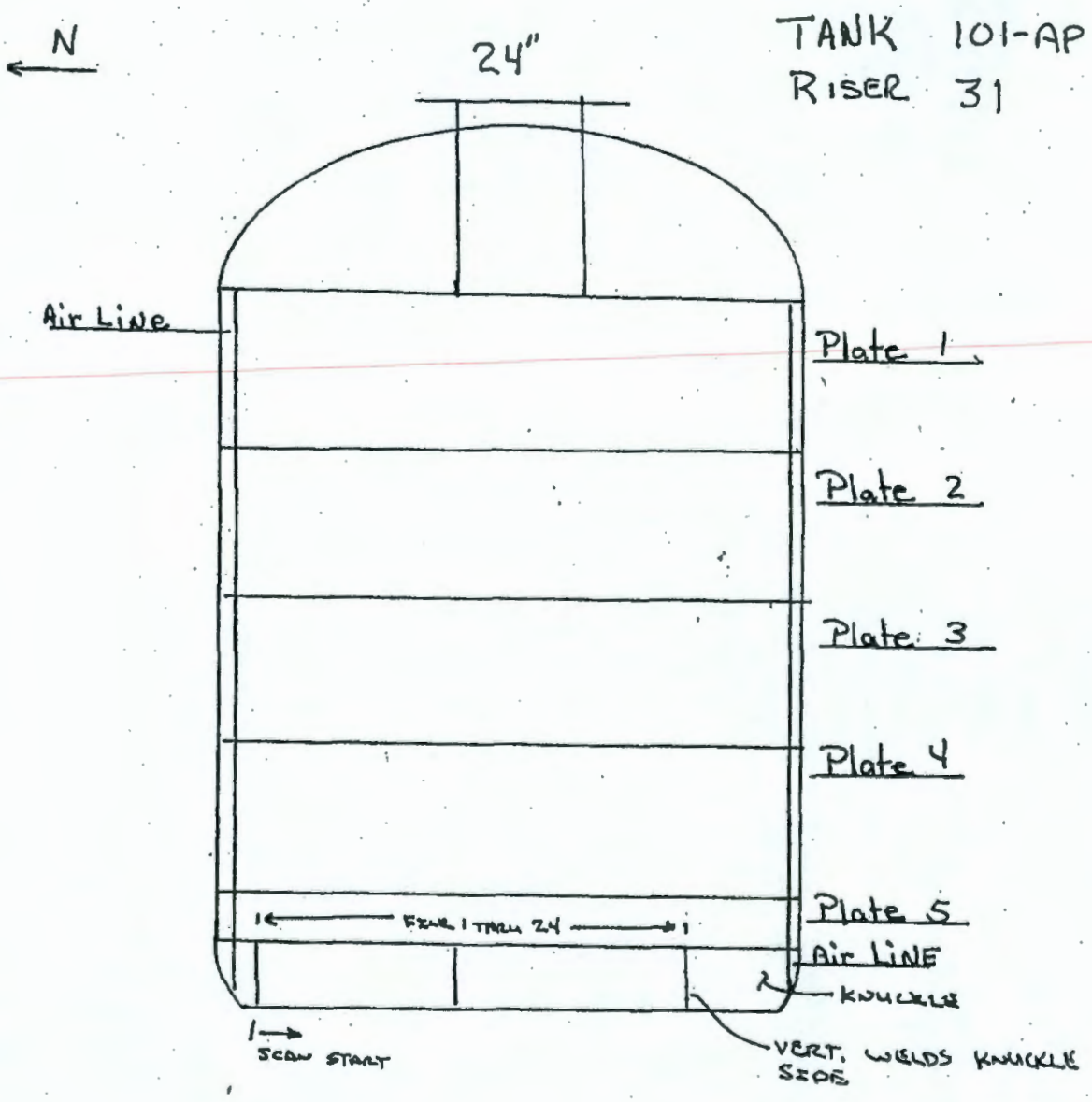
N
24"
TANK 101-AP
RISER 31
Air Line
Plate 1
Plate 2
Plate 3
Plate 4
Plate 5
Air LINE
KNUCKLE
FRAME 1 TRACK 24
SCAN START
VERT. WELDS KNUCKLE SIDES

This page intentionally left blank.

ATTACHMENT 5

ULTRASONIC EXAMINATION OF DOUBLE-SHELL TANK 241-AP-101
EXAMINATION COMPLETED MARCH 2003
(PNNL THIRD PARTY REVIEW)

This page intentionally left blank.

PNNL-14278 Rev. 0

Ultrasonic Examination of Double-Shell Tank 241-AP-101 Examination Completed March 2003

AF Pardini
GJ Posakony

April 2003

Prepared for
the U.S. Department of Energy
under Contract DE-AC06-76RL01830

Pacific Northwest National Laboratory
Richland, Washington 99352

This page intentionally left blank.

Summary

COGEMA Engineering Corporation (COGEMA), under a contract from CH2M Hill Hanford Group (CH2M Hill), has performed an ultrasonic examination of selected portions of Double-Shell Tank 241-AP-101. The purpose of this examination was to provide information that could be used to evaluate the integrity of the wall of the primary tank. The requirements for the ultrasonic examination of Tank 241-AP-101 were to detect, characterize (identify, size, and locate), and record measurements made of any wall thinning, pitting, or cracks that might be present in the wall of the primary tank. Any measurements that exceed the requirements set forth in the Engineering Task Plan (ETP), RPP-11832 (Jensen 2002), are reported to CH2M Hill and the Pacific Northwest National Laboratory (PNNL) for further evaluation. Under the contract with CH2M Hill, all data is to be recorded on disk and paper copies of all measurements are provided to PNNL for third-party evaluation. PNNL is responsible for preparing a report(s) that describes the results of the COGEMA ultrasonic examinations.

Examination Results

The results of the examination of Tank 241-AP-101 have been evaluated by PNNL personnel. The examination consisted of two 15-in. wide scans over the entire height of the tank, the heat-affected zone (HAZ) of four vertical welds and one horizontal weld, and examination of the knuckle region. The examination was performed to detect any wall thinning, pitting, or cracking in the primary tank wall.

Primary Tank Wall Vertical Scan Paths

Two 15-in.-wide scan paths were performed on Plates #1, #2, #3, #4, and #5. The plates were examined for wall thinning, pitting, and cracks oriented vertically on the primary tank wall. There were no areas that exceeded the reportable level of 10% of the nominal thickness. No pitting or vertical crack-like indications were detected in Plate #1, #2, #3, #4, or #5.

Primary Tank Wall Weld Scan Paths

The HAZs of vertical welds in Plates #2, #3, #4, and #5 were examined for wall thinning, pitting and cracks oriented either perpendicular or parallel to the weld. There were no areas that exceeded the reportable level of 10% of the nominal thickness. No pitting or crack-like indications were detected in the weld areas in Plate #2, #3, #4, or #5.

The HAZ of the horizontal weld between Plate #5 and the tank knuckle was examined for wall thinning, pitting and cracks oriented either perpendicular or parallel to the weld. There were no areas that exceeded the reportable level of 10% of the nominal thickness. No pitting or crack-like indications were detected in the weld areas on Plate #5 side or on the knuckle side of the horizontal weld.

Primary Tank Wall Knuckle Scan Paths

The upper portion of the knuckle area was scanned utilizing the Y-arm scanner attached to the AWS-5D crawler. The Y-arm scanned the transducers down around the knuckle approximately 12-in. from a starting position 2-in. down from the upper knuckle weld joining Plate #5 to the knuckle. The knuckle was examined for wall thinning, pitting, and cracks oriented circumferentially around the primary tank. There were no areas that exceeded the reportable level of 10% of the nominal thickness. No pitting or circumferentially oriented crack-like indications were detected in the upper portion of the knuckle area.

Four small areas on the lower portion of the knuckle area were examined for wall thinning only utilizing the Y-arm scanner in areas accessible through selected air slots. The four areas examined were in air slots designated as Slot1, Slot A, Slot B, and Slot D. There were no areas that exceeded the reportable level of 10% of the nominal thickness.

Contents

1.0 Introduction 1

2.0 Qualified Personnel, Procedures, and Equipment 2

2.1 Personnel Qualifications 2
2.2 Ultrasonic Examination Equipment 3
2.3 Ultrasonic Examination Procedure 3

3.0 Ultrasonic Examination Configuration 4

3.1 Primary Tank Wall Transducer Configuration 4
3.2 Weld Zone Transducer Configuration 5
3.3 Knuckle Area Transducer Configuration 7

4.0 Ultrasonic Examination Location 9

5.0 Ultrasonic Examination Results 11

6.0 Conclusions 15

6.1 Primary Tank Wall Vertical Scan Paths 15
6.2 Primary Tank Wall Weld Scan Paths 15
6.2 Primary Tank Wall Knuckle Scan Paths 16

7.0 References 17

Figures

3.1 Transducer Configuration for Examining the Primary Tank Wall 4

3.2 Transducer Configurations for Examination of Welds in the Primary Tank Wall 5

3.3 Views of the Weld Zones to be Ultrasonically Examined in the Primary Tank Wall 6

3.4 Sketch of a Section of the Knuckle Examined with the Y-Arm Scanner 7

3.5 Lower Knuckle Examination in Air Slot Regions (End View) 8

3.6 Lower Knuckle Examination in Air Slot Regions (Side View) 8

4.1 UT of 241-AP-101 Riser 31 9

4.2 Sketch of Scan Paths on Tank 241-AP-101 10

5.1 UT Data from Tank 241-AP-101 12

5.2 UT Data from Tank 241-AP-101 cont. 13

5.3 UT Data from Tank 241-AP-101 cont. 14

1.0 Introduction

COGEMA Engineering Corporation (COGEMA), under a contract from CH2M Hill Hanford Group (CH2M Hill), has performed an ultrasonic examination (UT) of selected portions of Double-Shell Tank (DST) 241-AP-101. The purpose of this examination was to provide information that could be used to evaluate the integrity of the DST. The requirements for the UT of Tank 241-AP-101 were to detect, characterize (identify, size, and locate), and record measurements made of any wall thinning, pitting, or cracks that might be present in the wall of the primary tank. Any measurements that exceed the requirements set forth in the Engineering Task Plan (ETP), RPP-11832 (Jensen 2002), are reported to CH2M Hill and the Pacific Northwest National Laboratory (PNNL) for further evaluation. Specific measurements that are reported include the following:

- Wall thinning that exceeds 10% of the nominal thickness of the plate.
- Pits with depths that exceed 25% of the nominal plate thickness.
- Stress-corrosion cracks that exceed 0.10-in. (through-wall) that are detected in the inner wall of the tank, heat-affected zone (HAZ) of welds, or in the tank knuckle.

The accuracy requirements for ultrasonic measurements for the different types of defects are as follows:

- Wall thinning – measure thickness within ±0.020-in.
- Pits – size depths within ±0.050-in.
- Cracks – size the depth of cracks on the inner wall surfaces within ±0.1-in.
- Location – locate all reportable indications within ±1.0-in.

Under the contract with CH2M Hill, all data is to be recorded on disk and paper copies of all measurements are provided to PNNL for third-party evaluation. PNNL is responsible for preparing a report(s) that describes the results of the COGEMA UT.

2.0 Qualified Personnel, Procedures, and Equipment

Under contract from CH2M Hill, qualification of personnel participating in the DST inspection program, the UT equipment (instrument and mechanical scanning fixture), and the UT procedure that will be used in the examination of the current DST is required. Personnel participating in the examinations are to be certified in accordance with American Society for Nondestructive Testing (ASNT) Guideline SNT-TC-1A-92 and associated documentation is to be provided. The capability of the UT system is to be validated through a performance demonstration test (PDT) administered by PNNL on a mock-up simulating the actual DST. The current procedure for the UT is to be based on the Section V, Article 4, *Boiler and Pressure Vessel Code* defined by the American Society for Mechanical Engineers (ASME).

2.1 Personnel Qualifications

The following individuals were qualified and certified to perform UT of the Hanford DST 241-AP-101:

- **Mr. Wesley Nelson**, ASNT Level III (#LM-1874) in UT, has been identified as COGEMA's UT Level III authority for this project. Mr. Nelson has been certified by COGEMA as a UT Level III in accordance with COGEMA procedure COGEMA-SVCP-PRC-014, latest revision. Further documentation has been provided to establish his qualifications. Reference: Letter from PNNL to C.E. Jensen dated August 22, 2000, "Report on Performance Demonstration Test – PDT, May 2000."

- **Mr. James B. Elder**, ASNT Level III (#JM-1891) in UT, has been contracted by COGEMA to provide peer review of all DST UT data. Mr. Elder has been certified by JBNDT as a UT Level III in accordance with JBNDT written practice JBNDT-WP-1, latest revision. Further documentation has been provided to establish his qualifications. Reference: PNNL-11971, *Final Report - Ultrasonic Examination of Double-Shell Tank 241-AN-107.*

- **Mr. William D. Purdy**, COGEMA UT Level II limited (for P-Scan data acquisition only). Mr. Purdy has been certified in accordance with COGEMA procedure COGEMA-SVCP-PRC-014, latest revision. Further documentation has been provided to establish his qualifications. Reference: Letter from PNNL to C.E. Jensen dated October 5, 2001, "Purdy Performance Demonstration Test (PDT) Report."

2.2 Ultrasonic Examination Equipment

CH2M Hill has provided the UT equipment for the examination of Tank 241-AP-101. This equipment consists of a Force Institute P-Scan ultrasonic test instrument and a Force Institute AWS-5D remote-controlled, magnetic-wheel crawler for examining the primary tank wall. The examination of Tank 241-AP-101 also included utilization of the Y-arm scanning bridge. Ultrasonic transducers used for the examinations are commercial off the shelf. The P-Scan ultrasonic system and Y-arm scanner attachment have been qualified through a PDT administered by PNNL. Reference: PNNL-11971, *Final Report- Ultrasonic Examination of Double-Shell Tank 241-AN-107* and letter from PNNL to C.E. Jensen dated September 21, 2001, "Qualification of the Y-Arm Attachment".

2.3 Ultrasonic Examination Procedure

COGEMA has provided the UT procedure for the examination of Tank 241-AP-101. This procedure, COGEMA-SVUT-INS-007.3, Revision 1, outlines the type of UT and mechanical equipment that are to be used as well as the types of transducers. Both straight-beam and angle-beam transducers are used for the examination of the primary tank wall. The examination procedures include full documentation on methods for calibration, examination, and reporting. Hard copies of the T-Scan (thickness) and P-Scan (projection or angle beam) views of all areas scanned are made available for analysis. The UT procedure requires the use of specific UT transducers for the different examinations. A calibration performed before and after the examinations identifies the specific transducers used and the sensitivity adjustments needed to perform the inspection. The COGEMA UT procedure has been qualified through a Performance Demonstration Test. Reference: PNNL-11971, *Final Report - Ultrasonic Examination of Double-Shell Tank 241-AN-107.*

3.0 Ultrasonic Examination Configuration

COGEMA is required to inspect selected portions of the DSTs which may include the primary and secondary tank walls, the HAZ of primary tank vertical and horizontal welds, and the tank knuckle and bottoms. The P-Scan system has been configured to perform these examinations and has been performance tested. The examination of Tank 241-AP-101 included UT of the primary tank wall, the HAZ of selected welds in the primary tank wall, the upper portion of the knuckle extending axially downward from the upper knuckle weld approximately 12-in., and selected portions of the knuckle in the air slot openings that extended to the lower knuckle weld.

3.1 Primary Tank Wall Transducer Configuration

Figure 3.1 provides an example of the scanning configuration generally used during an examination of the primary tank wall. However, other configurations can be used at the discretion of the COGEMA Ultrasonic Level III (i.e., 45-degree transducers can be removed for simple wall thickness measurements). The functional diagram in Figure 3.1 shows one straight-beam and two angle-beam transducers ganged together for examining the primary tank wall. The straight beam is designed to detect and record wall thinning and pits, and the angle beams are designed to detect and record any cracking that may be present. These transducers are attached to the scanning bridge and they all move together. Information is captured every 0.035-in. (or as set by the NDE inspector) as the assembly is scanned across a line. At the end of each scan the fixture is indexed 0.035-in. (or as set by the NDE inspector) and the scan is repeated. The mechanical scanning fixture is designed to scan a maximum of 15-in. and then index for the next scan. The hard copy provides a permanent record that is used for the subsequent analysis.

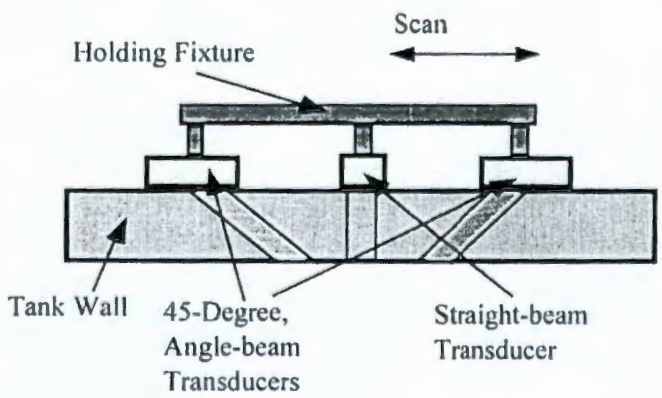

Transducer Specifications:

Angle-beam
Type: MWB-45 04E
Frequency : 4 MHz
Size: 8 X 9 mm.
Manufacturer: Krautkramer

Straight-beam
Type: MSEB 5B
Frequency: 5 MHz
Size: Dual - 8 X 2 mm
Manufacturer: Krautkramer

Figure 3.1. Transducer Configuration for Examining the Primary Tank Wall

3.2 Weld Zone Transducer Configuration

Figure 3.2 is a functional sketch that shows the configurations for examination of the weld zone. The area of interest (HAZ of the weld) is shown as lying adjacent to the weld. Both cracks and pitting may occur in this region. The "A" portion of this sketch shows the 60-degree angle-beam transducers used for detecting cracks parallel to the weld. The straight-beam transducers in this sketch are used for detecting and recording any pitting or wall thinning that may be present. All transducers are ganged together. The scanning distance traveled is limited to a total of 5.0-in. The sketch titled "B" shows the arrangement for detecting cracks that may lie perpendicular to the weld. Four 45-degree, angle-beam transducers are used for this inspection. Again the transducers are ganged together but the scan is limited to a total of 4.0-in. The weld zone requirements are shown in Figure 3.3. The scan protocol, data capture, and index are the same for examining other weld areas in the tank.

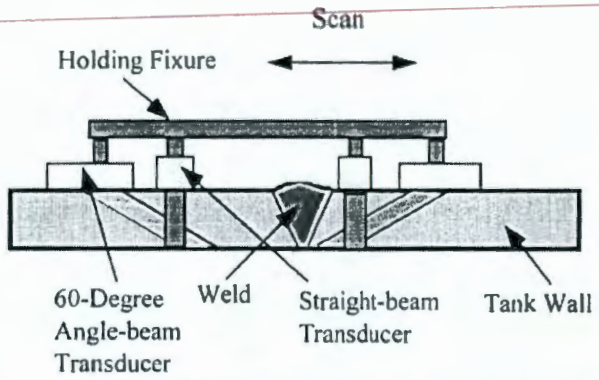

A. Configuration for pitting and cracks parallel to weld

Transducer Specifications:

Angle-Beam
Type: MWB-60 04E
Frequency: 4 MHz
Size: 8 X 9 mm
Manufacturer: Krautkramer

Straight-beam
Type: MSEB 5B
Frequency: 5MHz
Size: Dual - 2 X 8 mm
Manufacturer: Krautkramer

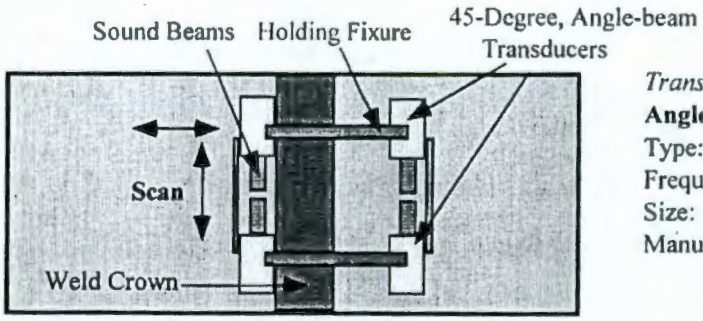

Transducer Specifications:

Angle-beam
Type: MWB-45 04E
Frequency: 4 MHz
Size: 8 X 9 mm
Manufacturer: Krautkramer

B. Configuration for cracks perpendicular to weld

Figure 3.2. Transducer Configurations for Examination of Weld Zone in the Primary Tank Wall

In the HAZ, the requirement for characterizing cracks that lie perpendicular or parallel to welds in the primary tank wall is described in Figure 3.3. The HAZs are located on either side of the weld and defined as being within 1-in. of the weld and on the inner three-quarters of the thickness (3/4T) of the plate. These zones are considered most likely to experience stress-corrosion cracking.

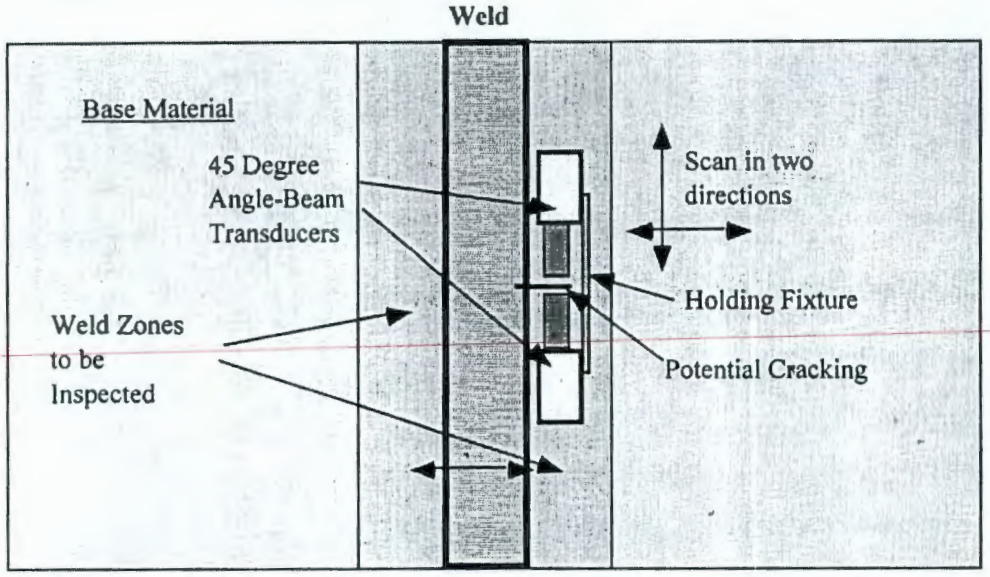

Top View - - - Cracks Perpendicular to Weld

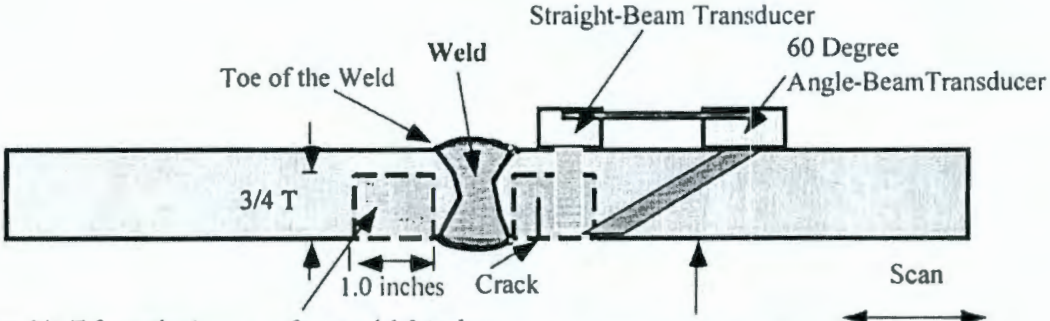

A zone 3/4 T from the inner surface and 1.0 inches from the toe of the weld is to be ultrasonically examined for cracking, corrosion or pitting. Examinations to be made on both sides of the weld.

End View - - - Cracks Parallel to Weld

Figure 3.3. Views of the Weld Zone to be Ultrasonically Examined in the Primary Tank Wall

3.3 Knuckle Area Transducer Configuration

Examination of the knuckle utilizes a modified scanning bridge known as the Y-arm scanner. The Y-arm provides scanning of the transducers directly on the knuckle region. The Y-arm is a special fixture that attaches to the AWS-5D magnetic wheel crawler. Its purpose is to extend the reach of the transducer assembly. This extension allows the transducer assembly to follow the curve of the upper portion of the knuckle below the transition Plate #5 to upper knuckle weld. It is designed to hold the dual 0-degree or two 45-degree transducers in the same configuration as used for the examination of the tank wall. The transducer configuration used for crack detection in this examination was two opposing 45-degree angle-beam transducers that were rotated 90-degrees from the orientation used for the wall crack inspection. This configuration is designed to detect cracks that are in a circumferential direction with respect to the axis of the tank. Figure 3.4 is a sketch showing the area of the section of the knuckle examined using the Y-arm fixture. With the transducer positioned 2-in. below the transition Plate #5 to upper knuckle weld, the scanning bridge was set to scan the transducer downward an additional distance of approximately 12-in. in 0.035-in steps (or as set by the operator). Upon completion of the scan, the bridge was indexed circumferentially 0.035-in. (or as set by the operator) and the scan downward is repeated to obtain a pixel size 0.035-in. x 0.035-in. (or as set by the operator).

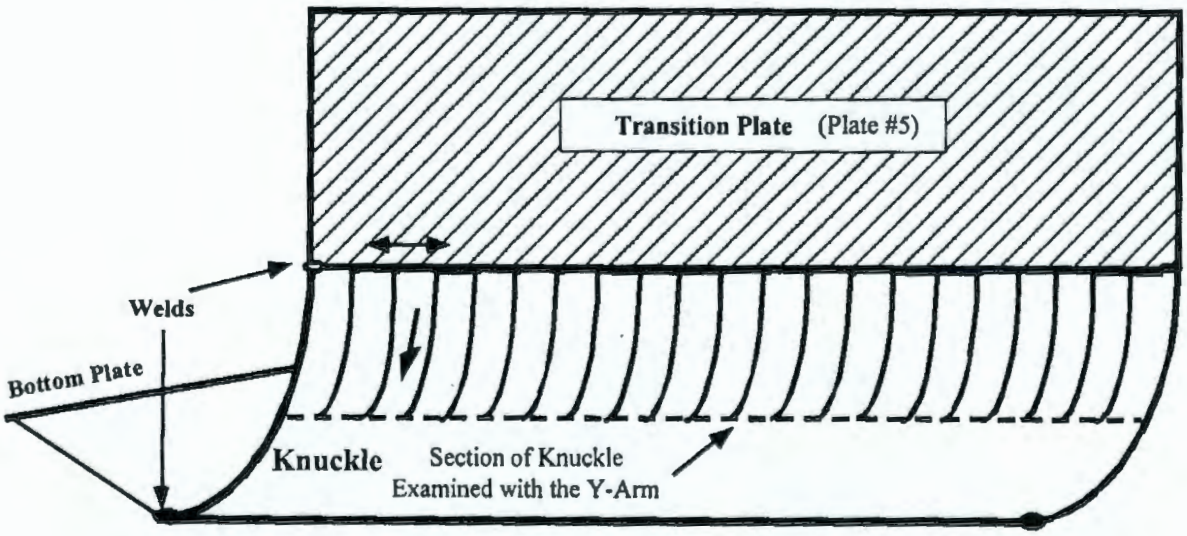

Figure 3.4. Sketch of a Section of the Knuckle Examined with the Y-Arm Scanner

Additional Y-arm scanning was done on areas that were accessible in the air slots that extend under the tank in the concrete support foundation. Figure 3.5 provides an end view (looking down the air slot) and Figure 3.6 provides a side view (looking along the circumference of the tank) of the examination of the lower knuckle in the region of the air slots.

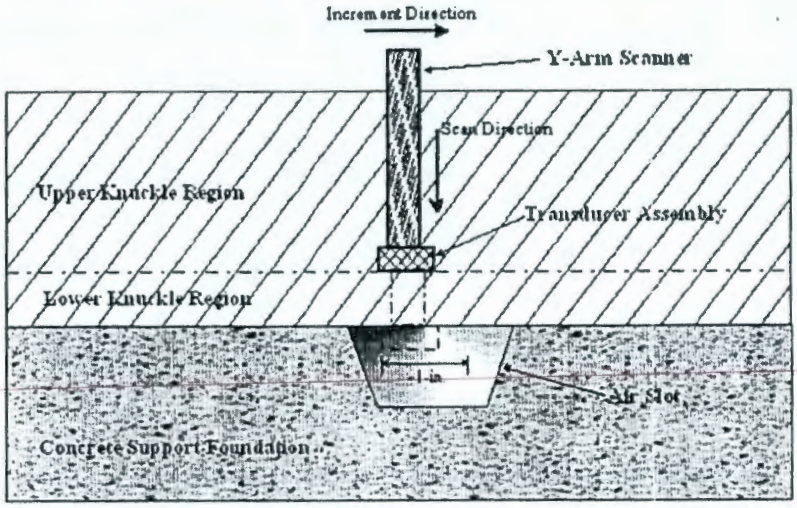

Figure 3.5. Lower Knuckle Examination in Air Slot Regions (End View)

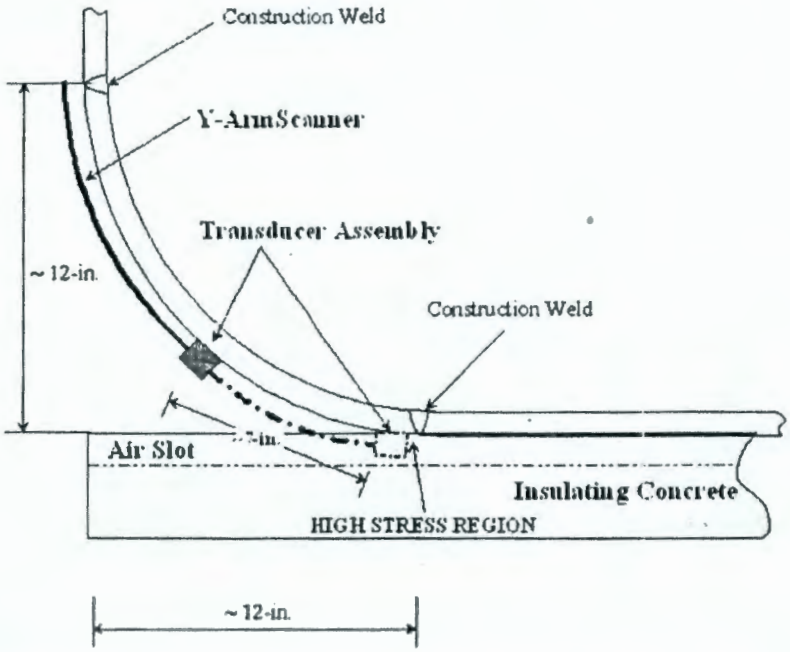

Figure 3.6. Lower Knuckle Examination in Air Slot Regions (Side View)

4.0 Ultrasonic Examination Location

Tank 241-AP-101 is located in the Hanford 200 East area in AP Tank Farm. The crawler and associated scanner were lowered into the 24-in. riser located on the west side of 241-AP-101 and designated as Riser 31. Riser 31 was originally called out as Riser 6 West. Figure 4.1 provides a graphic of the location of this riser.

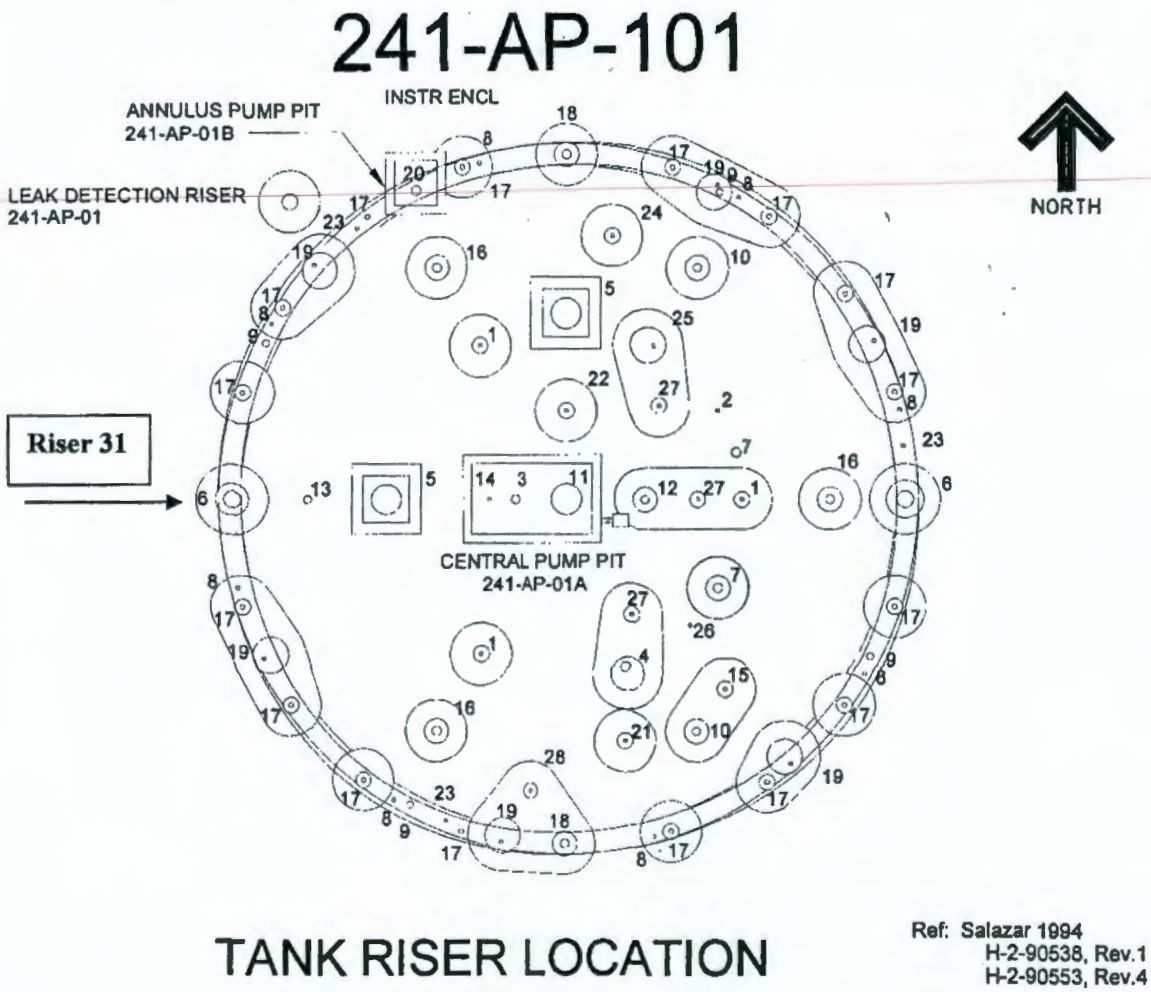

Figure 4.1. UT of 241-AP-101 from Riser 31

Figure 4.2 describes the areas on the primary wall of Tank 241-AP-101 that were ultrasonically examined. Two 15-in.-wide vertical scan paths were performed on Plates #1, #2, #3, #4, and #5 below the entrance to Riser 31. Vertical weld HAZ examinations were done on Plates #2, #3, #4, and #5, and the horizontal weld HAZ examination was done on the transition Plate #5 to knuckle weld. The upper portion of the knuckle was examined as well as four areas that extended down to the lower knuckle weld in the air slot regions.

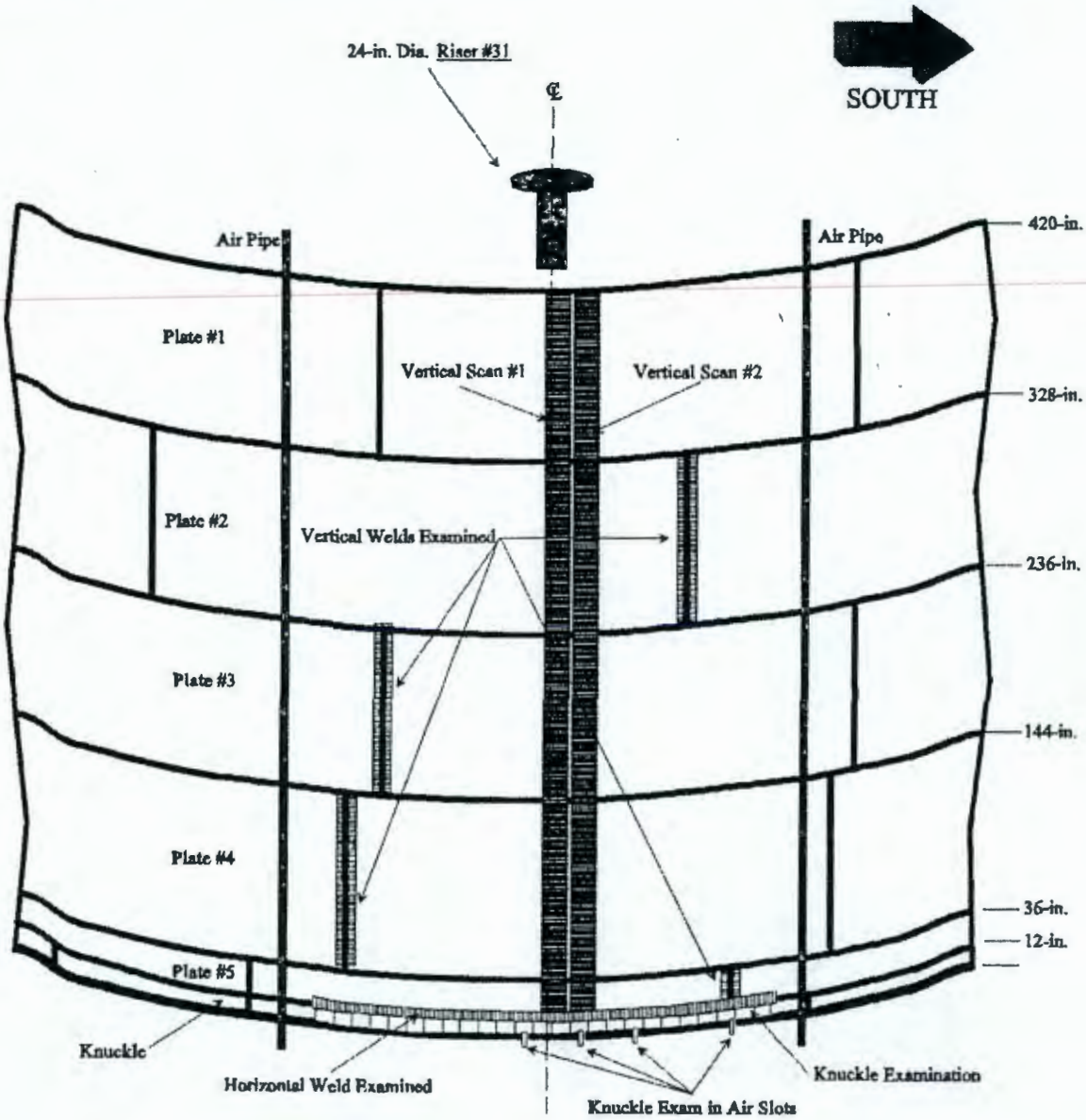

Figure 4.2. Sketch of Scan Paths on Tank 241-AP-101

5.0 Ultrasonic Examination Results

COGEMA has provided detailed reports including T-Scan and P-Scan hard copies of all areas that were ultrasonically examined to PNNL for third-party review. The data was analyzed by COGEMA Level III Mr. Wes Nelson and peer reviewed by JBNDT Level III Mr. Jim Elder. The results of the examination of Tank 241-AP-101 are presented in Figures 5.1, 5.2, and 5.3.

Figures 5.1 and 5.2 show the examination of the primary tank wall and the HAZs of both vertical and horizontal welds. The examination consisted of two vertical paths beneath the 24-in. diameter riser. Vertical scan #1 was 15-in. wide on Plates #1, #2, #3, #4, and #5 and was directly below the 24-in riser. Vertical scan #2 was adjacent to vertical scan #1 and was also 15-in. wide on Plates #1, #2, #3, #4, and #5. The HAZs of vertical welds in Plates #2, #3, #4, and #5 were examined and the HAZ in the horizontal weld between Plate #5 and the Knuckle section were also examined. Areas in the figures that show two measurements in the same box are the result of the vertical scan paths overlapping the horizontal HAZ scan paths or where the inspectors started a new scan and overlapped a previous scan. Figures 5.1 and 5.2 display the minimum reading taken in each 15-in. wide by 12-in. long portion of the scan. In the overlapping areas, both minimum readings from each of vertical and horizontal scan paths are given.

Figure 5.3 shows the examination performed on the knuckle of the primary tank wall. The readings distributed around the circumference of the tank knuckle represent the minimum reading in each 12-in. long by 12-in. wide portion extending down around the knuckle. The four areas denoted as Slot 1, Slot A, Slot B, and Slot D, represent small areas that were scanned extending down to the lower knuckle weld in the air slots. These scan areas are approximately 1-in. long (increment direction around the circumference of the tank), and 7-in wide (scan direction is down around the knuckle and into the air slot) as shown previously in Section 3 of this report.

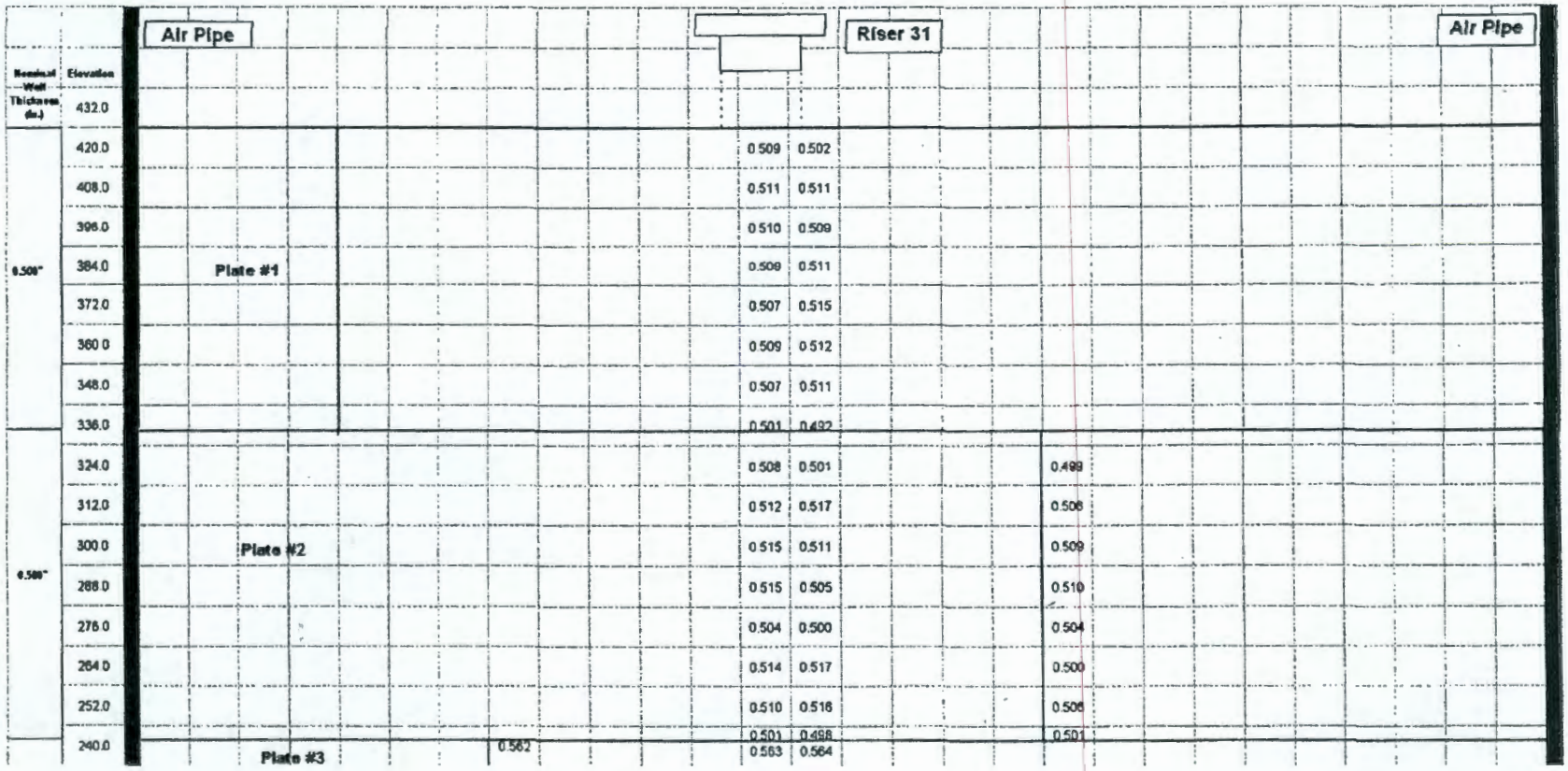

Figure 5.1. UT Data from Tank 241-AP-101

	240.0																																		
	228.0	Air Pipe																																	
	216.0																																		
	204.0				Plate #3																														
0.5625"	192.0																																		
	180.0																																		
	168.0																																		
	156.0																																		
	144.0					0.719																													
	132.0					0.725																													
	120.0					0.740 0.741																													
	108.0					0.736																													
0.794"	96.0			Plate #4		0.741																													
	84.0					0.730																													
	72.0					0.739																													
	60.0					0.727																													
	48.0					0.736																													
0.875"	36.0		Plate #5																																
	24.0			0.850	0.872	0.868	0.867	0.869	0.867	0.865	0.869	0.858	0.874	0.870	0.866	0.868	0.866	0.871	0.861	0.875	0.873	0.867	0.875	0.854	0.875										
0.9375"	12.0	Knuckle		0.913	0.896	0.910	0.898	0.884	0.907	0.905	0.897	0.869	0.906	0.898	0.939	0.920	0.924	0.935	0.922	0.929	0.936	0.908	0.922	0.926	0.955										

	240.0							0.562					0.501 0.563	0.498 0.564					0.501																
	228.0							0.562					0.567	0.558																				Air Pipe	
	216.0							0.568					0.570	0.571																					
	204.0							0.570					0.573	0.574																					
0.5625"	192.0							0.565					0.558	0.574																					
	180.0							0.570					0.571	0.574																					
	168.0							0.563					0.539	0.569																					
	156.0							0.564					0.563	0.559																					
	144.0												0.742	0.745																					
	132.0												0.756	0.754																					
	120.0												0.756	0.755																					
	108.0												0.758	0.751																					
0.794"	96.0												0.757	0.759																					
	84.0												0.756	0.757																					
	72.0												0.755	0.750																					
	60.0												0.746	0.741																					
	48.0												0.746	0.748																					
0.875"	36.0												0.865	0.871										0.855											
	24.0												0.860	0.868										0.852											
0.9375"	12.0												0.870	0.866	0.868	0.866	0.871	0.861	0.875	0.873	0.867	0.875	0.854	0.875											
													0.898	0.939	0.920	0.924	0.935	0.922	0.929	0.936	0.908	0.922	0.926	0.955											

Figure 5.2. UT Data from Tank 241-AP-101 cont.

Nominal Wall Thickness (in.)	Elevation																											
		Air Pipe																										Air Pipe
0.875"	36.0			Plate #5									0.865	0.871									0.855					
	24.0												0.880	0.866									0.852					
0.9375"	12.0	Upper Knuckle			0.889	0.907	0.912	0.906	0.891	0.871	0.875	0.891	0.905	0.895	0.897	0.908	0.897	0.898	0.890	0.866	0.880	0.871	0.877	0.906	0.916			
		Lower Knuckle										0.945 Slot 1			0.954 Slot A			0.944 Slot B						0.955 Slot D				

Figure 5.3. UT Data from Tank 241-AP-101 cont.

6.0 Conclusions

The results of the examination of Tank 241-AP-101 have been evaluated by PNNL personnel. The examination consisted of two 15-in. wide scans over the entire height of the tank, the HAZs of 4 vertical welds and 1 horizontal weld, and examination of the knuckle region. The examination was performed to detect any wall thinning, pitting, or cracking in the primary tank wall.

6.1 Primary Tank Wall Vertical Scan Paths

Two 15-in.-wide scan paths were performed on Plates #1, #2, #3, #4, and #5. The plates were examined for wall thinning, pitting, and cracks oriented vertically on the primary tank wall. The results indicated that the minimum thicknesses in the areas scanned with nominal thickness of 0.500-in. were as follows; Plate #1 was 0.492-in. and Plate #2 was 0.498-in. The nominal thickness in Plate #3 is 0.5625-in. and the minimum thickness in this area was 0.539-in. The nominal thickness in Plate #4 is 0.750-in. and the minimum thickness in this area was 0.741-in. The nominal thickness in Plate #5 is 0.875-in. and the minimum thickness in this area was 0.860-in. There were no areas that exceeded the reportable level of 10% of the nominal thickness. No pitting or vertical crack-like indications were detected in Plate #1, #2, #3, #4, or #5.

6.2 Primary Tank Wall Weld Scan Paths

The HAZs of vertical welds in Plates #2, #3, #4, and #5 were examined for wall thinning, pitting and cracks oriented either perpendicular or parallel to the weld. The results indicated that the minimum thicknesses in the weld areas scanned were as follows: The nominal thickness of Plate #2 is 0.500-in. and the minimum thickness in this weld area was 0.499-in. The nominal thickness in Plate #3 is 0.5625-in. and the minimum thickness in this weld area was 0.562-in. The nominal thickness in Plate #4 is 0.750-in. and the minimum thickness in this weld area was 0.719-in. The nominal thickness in Plate #5 is 0.875-in. and the minimum thickness in this weld area was 0.852-in. There were no areas that exceeded the reportable level of 10% of the nominal thickness. No pitting or crack-like indications were detected in the weld areas in Plate #2, #3, #4, or #5.

The HAZ of the horizontal weld between Plate #5 and the tank knuckle was examined for wall thinning, pitting and cracks oriented either perpendicular or parallel to the weld. The results indicated that the minimum thickness in the weld area with nominal thickness of 0.875-in. on Plate #5 was 0.854-in. The minimum thickness in the weld area with nominal thickness of 0.9375-in. on the knuckle was 0.884-in. There were no areas that exceeded the reportable level of 10% of the nominal thickness. No pitting or crack-like indications were detected in the weld areas on Plate #5 side or on the knuckle side of the horizontal weld.

6.3 Primary Tank Wall Knuckle Scan Paths

The upper portion of the knuckle area was scanned utilizing the Y-arm scanner attached to the AWS-5D crawler. The Y-arm scanned the transducers down around the knuckle approximately 12-in. from a starting position 2-in. down from the upper knuckle weld joining Plate #5 to the knuckle. The knuckle was examined for wall thinning, pitting, and cracks oriented circumferentially around the primary tank. The results indicated that the minimum thickness in the approximately 20 circumferential feet of knuckle area examined with nominal thickness of 0.9375-in. was 0.880-in. There were no areas that exceeded the reportable level of 10% of the nominal thickness. No pitting or circumferentially oriented crack-like indications were detected in the upper portion of the knuckle area.

Four small areas on the lower portion of the knuckle area were examined for wall thinning only utilizing the Y-arm scanner in areas accessible through selected air slots. The four areas examined were in air slots designated as Slot1, Slot A, Slot B, and Slot D. The results indicated that the minimum thickness in the lower portion of the knuckle area, with nominal thickness of 0.9375-in., in the selected air slots was 0.944-in. There were no areas that exceeded the reportable level of 10% of the nominal thickness.

7.0 References

Jensen, C. E., 2002, *Engineering Task Plan for the Ultrasonic Inspection of Hanford Double-Shell Tanks FY2003*, RPP-11832, Rev 0, September 2002, CH2M Hill Hanford Group, Inc., Richland, Washington.

Distribution

No. of
Copies

Offsite

4 DOE/Office of Scientific and
Technical Information &
Information Release

1 DOE Office of Science and
Technology
Kurt Gerdes
1154 Cloverleaf Building
19901 Germantown Road
Germantown, MD 20874-1290

Onsite

4 **Hanford Site**

J. L. Castleberry (1)	R3-76
G. P. Duncan (1)	R3-76
C. E. Jensen (2)	R3-76

10 **Pacific Northwest National Laboratory**

M. T. Anderson (1)	K5-26
J. W. Brothers (1)	K7-15
L. O. Casazza (1)	K5-26
A. F. Pardini (6)	K5-26
G. J. Posakony (1)	K5-26

ATTACHMENT 6

RONDE ULTRASONIC EXAMINATION OF DOUBLE-SHELL TANK 241-AP-101 KNUCKLE REGION EXAMINATION COMPLETED APRIL 2003 (PNNL THIRD PARTY REVIEW)

This page intentionally left blank.

PNNL-14288 Rev. 0

RONDE Ultrasonic Examination of Double-Shell Tank 241-AP-101 Knuckle Region Examination Completed April 2003

AF Pardini
GJ Posakony

May 2003

Prepared for
the U.S. Department of Energy
under Contract DE-AC06-76RL01830

Pacific Northwest National Laboratory
Richland, Washington 99352

This page intentionally left blank.

Summary

COGEMA Engineering Corporation (COGEMA), under a contract from CH2M Hill Hanford Group (CH2M Hill), has performed an ultrasonic examination of the knuckle region of Double-Shell Tank 241-AP-101 utilizing the Remotely Operated Nondestructive Examination (RONDE) system (also known as the SAFT/TSAFT system) (Pardini et al. 2001). The purpose of this examination was to provide information that could be used to evaluate the integrity of the knuckle region of the primary tank. The requirements for the ultrasonic examination of Tank 241-AP-101 were to detect, characterize (identify, size, and locate), and record measurements made of any circumferentially oriented cracks that might be present in the knuckle area of the primary tank. Any measurements that exceed the requirements set forth in the Engineering Task Plan (ETP), RPP-11832 (Jensen 2002), are reported to CH2M Hill and the Pacific Northwest National Laboratory (PNNL) for further evaluation. Under the contract with CH2M Hill, all data is to be recorded on disk and paper copies of all measurements are provided to PNNL for third-party evaluation. PNNL is responsible for preparing a report(s) that describes the results of the COGEMA ultrasonic examinations.

Examination Results

The results of the ultrasonic examination of the knuckle region of Tank 241-AP-101 provided by COGEMA have been evaluated by PNNL personnel. The results of the examination of Tank 241-AP-101 indicated no circumferential crack-like indications were present anywhere in the knuckle region between the upper knuckle weld and the lower knuckle weld over the approximately 240 circumferential inches scanned.

This page intentionally left blank.

Contents

1.0 Introduction 1

2.0 Qualified Personnel, Equipment, and Procedures 1

2.1 Personnel Qualifications 2
2.2 Ultrasonic Examination Equipment 2
2.3 Ultrasonic Examination Procedure 2

3.0 Ultrasonic Examination Configuration 2

4.0 Ultrasonic Examination Location 5

5.0 Ultrasonic Examination Results 7

6.0 Conclusions 7

7.0 References 7

Figures

3.1 RONDE on Test Mockup 3

3.2 General Knuckle Scanning Arrangement 4

4.1 UT of 241-AP-101 from Riser 31 5

4.2 Sketch of Scan Paths on Tank 241-AP-101 6

1.0 Introduction

COGEMA Engineering Corporation (COGEMA), under a contract from CH2M Hill Hanford Group (CH2M Hill), has performed an ultrasonic examination (UT) of selected portions of Double-Shell Tank (DST) 241-AP-101 utilizing the Remotely Operated Nondestructive Examination (RONDE) system (also known as the SAFT/TSAFT system) (Pardini et al. 2001). The purpose of this examination was to provide information that could be used to evaluate the integrity of the knuckle region of the DST. The requirements for the UT of Tank 241-AP-101 were to detect, characterize (identify, size, and locate), and record measurements made of any circumferentially oriented cracks that might be present in the knuckle area of the primary tank. Any measurements that exceed the requirements set forth in the Engineering Task Plan (ETP), RPP-11832 (Jensen 2002), are reported to CH2M Hill and the Pacific Northwest National Laboratory (PNNL) for further evaluation. Specific measurements that are reported include the following:

- Circumferentially oriented stress-corrosion cracks that exceed 0.10 in. (through-wall) that are detected in the inner wall of the tank knuckle.

The accuracy requirements for ultrasonic measurements are as follows:

- Cracks – size the depth of cracks on the inner wall surfaces within ±0.1 in.
- Location – locate all reportable indications within ±1.0 in.

Under the contract with CH2M Hill, all data is to be recorded on disk and paper copies of all measurements are provided to PNNL for third-party evaluation. PNNL is responsible for preparing a report(s) that describes the results of the COGEMA UT.

2.0 Qualified Personnel, Equipment, and Procedures

Under contract from CH2M Hill, qualification of personnel participating in the DST inspection program, the UT equipment (instrument and mechanical scanning fixture), and the UT procedure that will be used in the examination of the current DST is required. Personnel participating in the examinations are to be certified in accordance with American Society for Nondestructive Testing (ASNT) Guideline SNT-TC-1A-92 and associated documentation is to be provided. The capability of the UT system, including personnel and procedures, is to be validated through a Performance Demonstration Test (PDT) on a mock-up simulating the actual DST. The current procedure for the UT is to be based on the Section V, Article 4, *Boiler and Pressure Vessel Code* defined by the American Society for Mechanical Engineers (ASME).

2.1 Personnel Qualifications

The following individual was qualified and certified to perform UT of the Hanford DST 241-AP-101 knuckle region utilizing the RONDE system:

- **Mr. Wesley Nelson**, ASNT Level III in UT (#LM-1874), has been identified as COGEMA's UT Level III authority for this project. Mr. Nelson has been certified by COGEMA as a UT Level III in accordance with COGEMA procedure COGEMA-SVCP-PRC-014, latest revision. Further documentation has been provided to establish his qualifications.[1]

2.2 Ultrasonic Examination Equipment

CH2M Hill and PNNL have provided the UT equipment for the examination of the knuckle region of Tank 241-AP-101. This equipment consists of a Force Institute AWS-5D remote-controlled, magnetic-wheel crawler for transporting the PNNL RONDE scanning bridge. Ultrasonic transducers used for the examinations are commercial off the shelf. The RONDE ultrasonic system has been qualified through a PDT administered by PNNL.[2]

2.3 Ultrasonic Examination Procedure

COGEMA has provided the RONDE UT procedure for the examination of Tank 241-AP-101. This procedure, COGEMA-SVUT-INS-007.5, Revision 0, outlines the type of UT and mechanical equipment that are to be used as well as the types of transducers. Only angle-beam transducers are used for the examination of the knuckle region of the primary tank wall. The examination procedures include full documentation on methods for calibration, examination, and reporting. Hard copies of the SAFT/TSAFT views of all areas scanned are made available for analysis. The UT procedure requires the use of specific UT transducers for the knuckle examinations. A calibration performed before and after the examinations identifies the specific transducers used and the sensitivity adjustments needed to perform the inspection. The COGEMA UT procedure has been qualified through a PDT administered by PNNL.[a]

3.0 Ultrasonic Examination Configuration

COGEMA is required to inspect selected portions of the DSTs that may include the primary and secondary tank walls, the heat-affected zones of primary tank vertical and horizontal welds, and the tank knuckle and bottoms. The RONDE system has been configured to perform the examination of the knuckle region. The RONDE examination of Tank 241-AP-101 concentrated on the knuckle region from

---

(1) Reference: "SAFT/T-SAFT Performance Demonstration Test (PDT) (Mr. Wesley Nelson)," dated November 14, 2002.

(2) E-mail from Gerald J. Posakony to Susan L. Crawford and Allan F. Pardini, dated September 27, 2002, "SAFT-T-SAFT PDT."

the upper knuckle weld to the lower knuckle weld (approximately 19 in. measured on the inside diameter) and extended circumferentially around the tank approximately 240 in. Figure 3.1 provides an image of the actual equipment and configuration for the examination of the knuckle region of the primary tank and the approximate location of the scanner during normal operation.

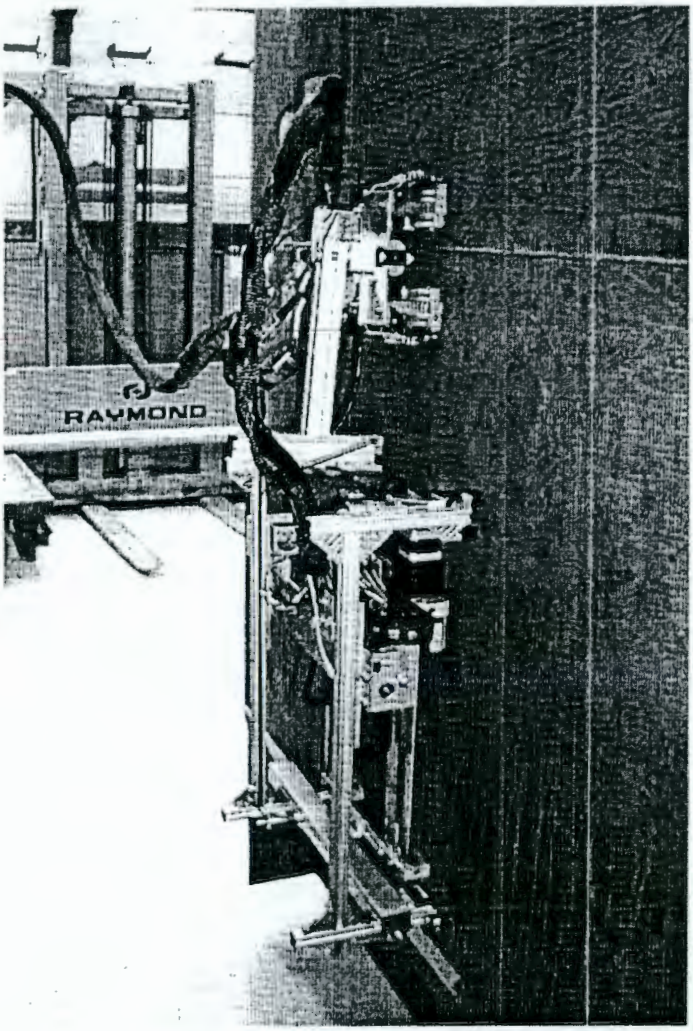

Figure 3.1 RONDE on Test Mockup

The functional diagram in Figure 3.2 shows two 70° angle-beam transducers in a pitch-catch arrangement for examining the knuckle region of the primary tank. The angle beam transducers are designed to detect and record any circumferential cracking that may be present. These transducers are attached to the scanning bridge and can move together or individually. During crack detection scanning, the two transducers move together in unison, transducer A "pitching the sound" and transducer B "catching the sound." If a crack is detected, the two transducers are operated individually in a passing motion allowing for sizing of the detected crack. During detection scanning, information is captured

every 0.025 in. (or as set by the NDE inspector) as the transducers are scanned down towards the knuckle. At the end of each scan line, the fixture is incremented 0.25 in. (or as set by the NDE inspector) and the next scan line is acquired. The mechanical scanning fixture is designed to scan the transducers approximately 10 in. by 12.5 in.; however, the sound field from the 70° transducer interrogates the entire volume of the knuckle and the C-scan (plan view) display of the data shows the entire knuckle, from the upper knuckle weld to the lower knuckle weld, and 12.5 in. in circumference. This C-scan display is immediately evaluated to identify any crack-like indications which may require additional scanning for sizing. If no crack-like indication is identified in the 12.5-in. circumferential area scan of the knuckle, the crawler transports the bridge to the next area. The hard copy C-scan view provides a permanent record that can be used for any subsequent analysis.

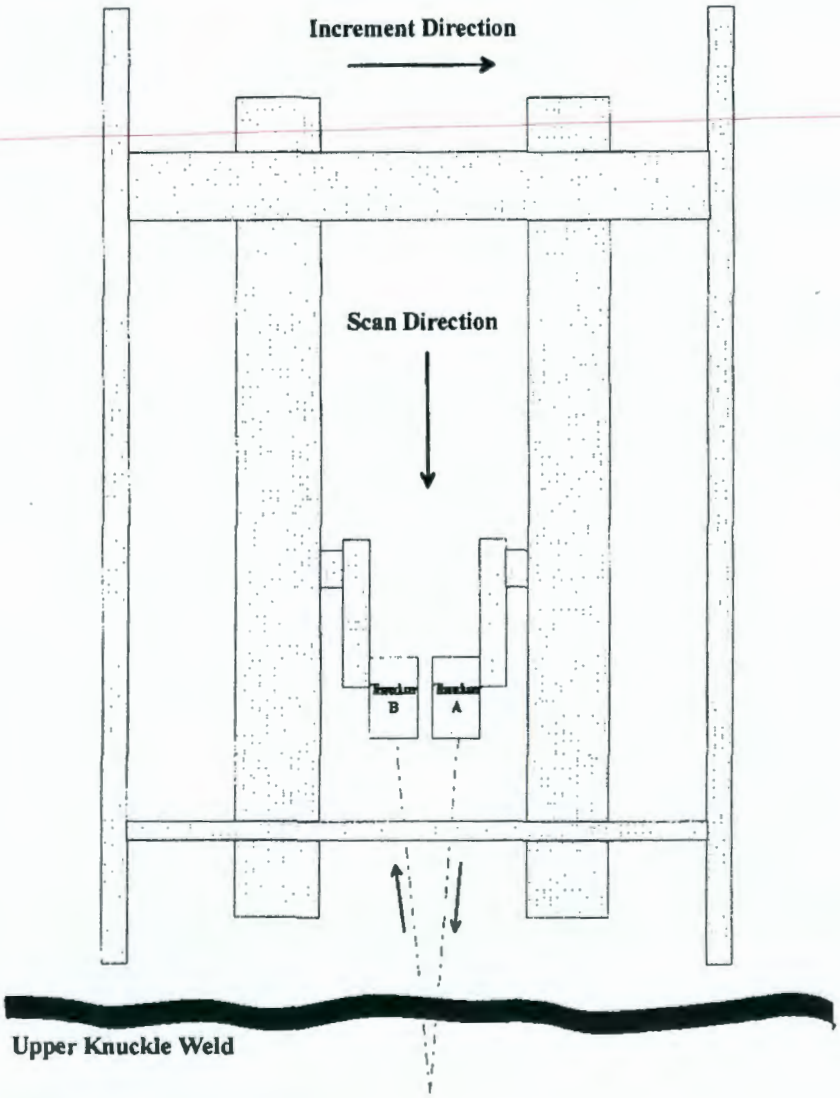

Transducer Specifications:
Type: MSW-QC Benchmark
Frequency: 3.5 MHz
Size: 0.5" Diameter
Angle: 70 degree, Wedge W-213
Manufacture: Krautkramer

Figure 3.2 General Knuckle Scanning Arrangement

4.0 Ultrasonic Examination Location

Tank 241-AP-101 is located in the Hanford 200 East area in AP Tank Farm. The crawler and associated RONDE scanner were lowered into the 24-in. riser located on the west side of 241-AP-101 and designated as Riser 31. Riser 31 was originally called out as Riser 6 West. Figure 4.1 provides a graphic of the location of this riser. Figure 4.2 describes the area on the primary tank wall knuckle of Tank 241-AP-101 that was ultrasonically examined.

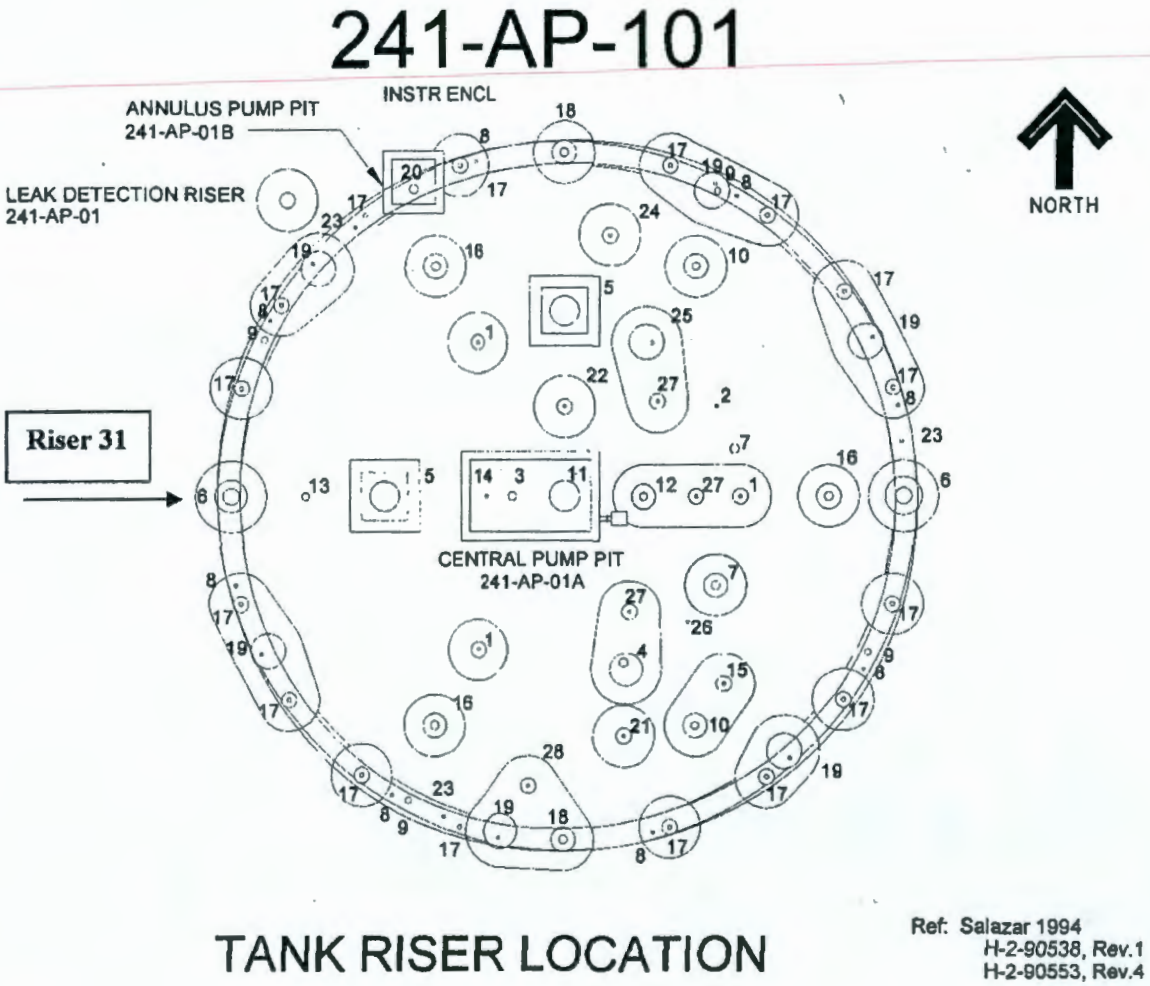

Figure 4.1 UT of Tank 241-AP-101 from Riser 31

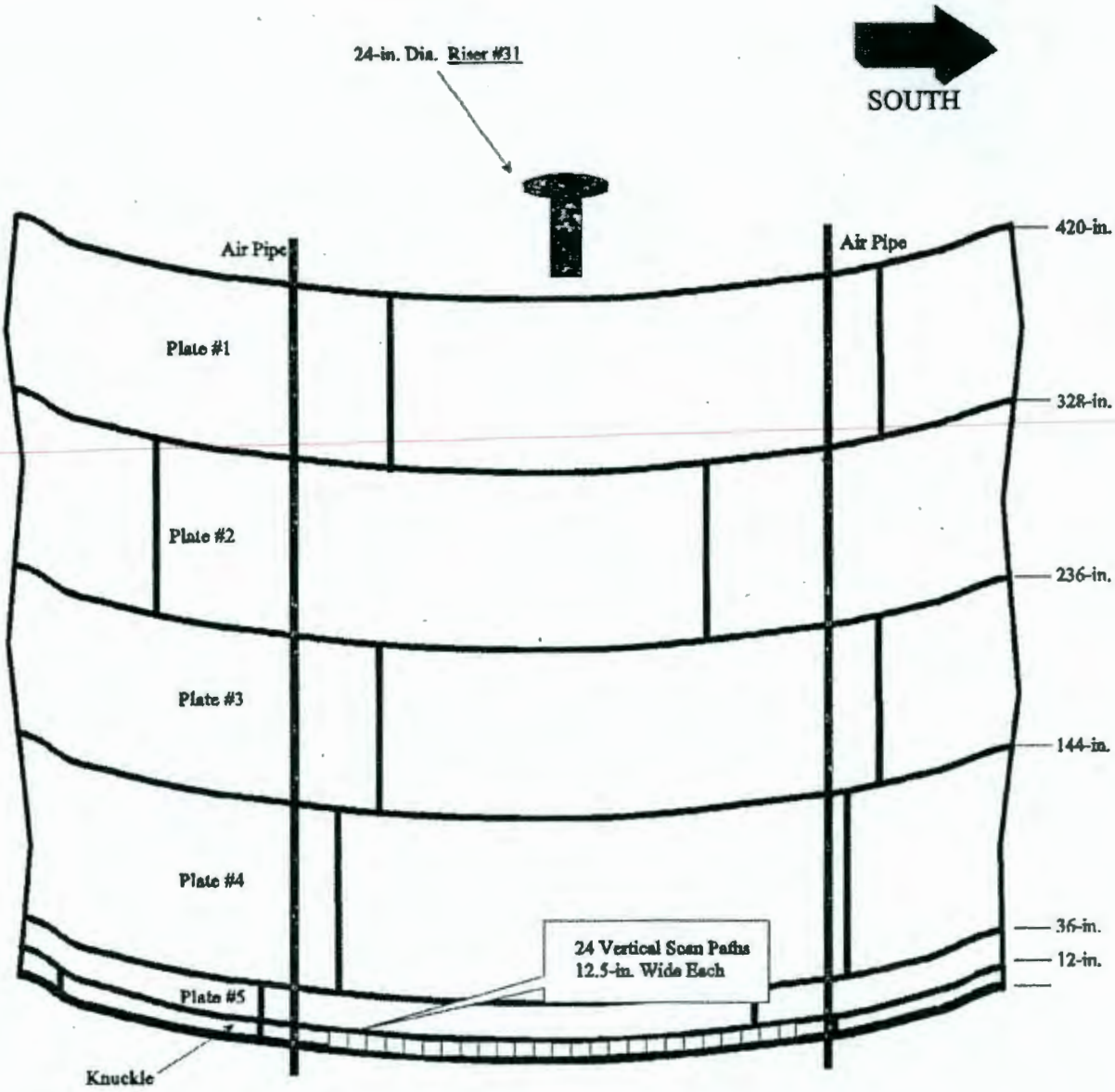

Figure 4.2 Sketch of Scan Paths on Tank 241-AP-101

5.0 Ultrasonic Examination Results

COGEMA has provided detailed reports and data of all areas of the knuckle region on Tank 241-AP-101 that were ultrasonically examined to PNNL for third-party review. The data was analyzed by COGEMA Level III Mr. Wes Nelson. Upon receipt of the data, PNNL staff members Susan Crawford, Jerry Posakony, and Al Pardini performed a peer review of the results.

The examination consisted of 24 individual scans, each being 12.5 in. in width (circumferential direction). The crawler was moved around the circumference in 10-in. increments, thereby providing for a 2.5-in overlap during data acquisition. The total amount of knuckle scanned was approximately 240 in. measured circumferentially around the tank. The data was displayed in a C-scan (plan) view and provided an image of the entire knuckle, from upper knuckle weld to lower knuckle weld (approximately 19 in. measured on the inside diameter), inclusive of the predicted high-stress region. Further analysis was performed on selected data files by PNNL using the SAFT analysis algorithm to verify position of the lower knuckle weld.

The results of the examination of Tank 241-AP-101 indicated no circumferential cracking was present anywhere in the knuckle region between the upper knuckle weld and the lower knuckle weld over the approximately 240 circumferential inches scanned.

6.0 Conclusions

The results of the examination of the knuckle region of Tank 241-AP-101 have been evaluated by PNNL personnel. The UT concentrated on the examination of the knuckle region from the upper knuckle weld to the lower knuckle weld (approximately 19 in. measured on the inside diameter) and extended circumferentially around the tank approximately 240 in. The data provided by the COGEMA Level III UT of the results of the examination of Tank 241-AP-101 indicated no circumferential crack-like indications were present in the approximately 240 circumferential inches scanned of the knuckle region.

7.0 References

Jensen, C. E., 2002, *Engineering Task Plan for the Ultrasonic Inspection of Hanford Double-Shell Tanks FY2003*, RPP-11832, Rev 0, September 2002, CH2M Hill Hanford Group, Inc., Richland, Washington.

Pardini, A. F., et al. 2001. *Annual Report – Development of a Remotely Operated NDE System for Inspection of Hanford's Double Shell Waste Tank Knuckle Regions*, PNNL-13682, Pacific Northwest National Laboratory, Richland, Washington.

Distribution

No. of
Copies

Offsite

4 DOE/Office of Scientific and
Technical Information &
Information Release

1 DOE Office of Science and
Technology
Kurt Gerdes
1154 Cloverleaf Building
19901 Germantown Road
Germantown, MD 20874-1290

Onsite

4 **Hanford Site**

J. L. Castleberry (1)	R3-76
G. P. Duncan (1)	R3-76
C. E. Jensen (2)	R3-76

10 **Pacific Northwest National Laboratory**

M. T. Anderson (1)	K5-26
J. W. Brothers (1)	K7-15
L. O. Casazza (1)	K5-26
S. L. Crawford (1)	K5-26
A. F. Pardini (5)	K5-26
G. J. Posakony (1)	K5-26