0057669 CH0008

CANBERRA

CH-008
Batch Data Report
For
233-S ISOCS NDA Assays

Measurement and Analysis by: _____ **Date:** 02/26/02
Martin Winterrose

Data Review by: _____ **Date:** 26FEB02
Michael G. Cantaloub

RECEIVED
JUN 13 2002
EDMC

RECEIVED
FEB 2002

Canberra Industries, Inc.
1050 Gillmore, Suite A
Richland, Washington 99352
Tel. 509-943-3442 Fax 509-943-0363

COGEMA GROUP

1. Introduction

This report documents results for twenty-three (23) individual items assayed by Canberra Hanford using the In Situ Object Counting System (ISOCS). All measurements were performed in accordance with the "Sampling and Analysis Plan for the 233-S Plutonium Concentration Facility" (DOE/RL-97-87 Rev. 1) and the Canberra Hanford Quality Control Plan and procedure. The individual items were assayed at the 233-S facility during the time period from February 5 to February 21, 2002.

2. Technical Information

The items were assayed within the assay trailer at the 233-S facility grounds. Assays were conducted in one of two manners: For smaller items, a single sample average spectrum was obtained by measuring the item, manually rotating it 180 degrees then continuing data acquisition. For larger items, two separate spectra were obtained and the assay results averaged or summed as appropriate. Total count times were fixed at 1800 seconds live time.

Items were placed on a cart within a reduced background area of the trailer. The detector was positioned a minimum of 24 inches from the item with the detector face visually centered on the largest surface area of the package. The detector sides were shielded with a lead collimator to minimize scatter and background.

Individual ISOCS efficiency calibrations were created for each item. Box, pipe, cylinder and flat plate geometry models were used. An item's composition was determined as best as possible through a combination of the item's packaging description, visual inspection, and package handling. Some items proved very easy to model (e.g. flat plate) while others more difficult. Model matrices were varied or the expected activity distribution adjusted to obtain reasonable correlation between the low and high energy Pu-239 and Am-241 emissions. This was not always a viable option, however; as many assays identified only a single Pu-239 and/or Am-241 emission peak.

Final package results were calculated using the Analysis V3b spreadsheet. Data analysis was conservative. Method selections (e.g. measured Am-241 versus Am-241 calculated from the measured Pu-239) normally favored higher final results.

Several analysis spreadsheets show a "Density > 1" error. This is due almost exclusively to propagating the TMU associated with a flat plate or plates using "Box" assumptions. For metal sheets or straps, the activity is assumed to be limited to the metal's surface (as a thin dirt layer) not distributed within the plate metal and as such, the 'flag' does not show the results to be in error.

3. Quality Control Results

Daily background and quality control (QC) check source measurements were performed on the system prior to each day's measurements. Charts for these measurements are on

pages 5 - 11. The control charts cover the period of January 31, 2002 to February 25, 2002. During the time period, the system was determined to be operating properly. The peak area and centroid control charts indicate a very stable system. One background count deserves comment.

With respect to background measurements, there is one instance of a higher than normal background. On February 5, the Eu-152 check source was brought into the vicinity of the detector as the daily background count was just finishing. This resulted in an out-of-specification background. The source was removed, the background count repeated, and background was acceptable. This was reported in Batch Data Report CH007.

Package 4837 was randomly selected for replicate measurement and was assayed on February 7, 2002. The table below shows the comparison results for the 59.6 keV emission of Am-241 as no Pu-239 peaks were identified in either assay. The replicate satisfies the quality requirements.

Replicate Analysis	Package 4837
| Am-241(orig) - Am-241(rep) |	0.39
$1.96 * \sqrt{[\text{unc(orig)}]^2 + [\text{unc(rep)}]^2}$	0.51

4. Summary of Results

Full data packages for each item are included as an attachment beginning on page 12. The following table (page 4) summarizes the total TRU activity results and plutonium gram values for each item. The 'Pu Mass + 3-sigma' values in the table are based solely on counting statistics. The 'Pu Mass + 3-sigma TMU' values are not included here, but are reported on the final result spreadsheets.

Summary of package assay results for Data Batch Report CH008

Package Item ID	Assay Weight (kg)	TRU Act (nCi/g)		TRU TMU (nCi/g)	Pu Mass (g)	Pu Mass(g) + 3 sigma	Description, calculation notes
5932	10	9.26E+01	±	5.40E+01	5.21E-03	9.83E-03	Porta Ban
5928	10	5.71E+02	±	2.35E+02	4.09E-02	5.49E-02	Porta Ban
5140	10	1.15E+02	±	3.79E+01	9.00E-03	1.50E-02	Porta Ban
4816	46.8	7.82E+01	±	2.06E+01	2.06E-02	3.16E-02	Duct
4817	31.8	1.04E+02	±	1.45E+01	3.19E-02	3.19E-02	Duct; Pu-239 MDA
4837	17	8.81E+01	±	1.21E+01	1.42E-02	1.42E-02	Duct; Pu-239 MDA
4837 R	17	9.00E+01	±	1.23E+01	1.44E-02	1.44E-02	Duct, Pu-239 MDA
4756	50	3.71E+01	±	3.45E+00	1.77E-02	1.77E-02	Concrete core; Pu-239 MDA
1757	41	3.41E+01	±	6.81E+00	1.12E-02	2.13E-02	Flow meter; Pu-239
1728	10	2.87E+02	±	2.58E+01	2.63E-02	3.50E-02	Panel
1759	22	1.21E+02	±	1.09E+01	2.33E-02	3.13E-02	Steel plate
1313	17.3	3.41E+01	±	1.22E+01	4.97E-03	9.76E-03	Metal frame/electrical panel
1726	9.1	8.77E+01	±	1.08E+01	7.04E-03	1.10E-02	Steel plate
3006	0.9	2.97E+01	±	1.35E+01	4.86E-03	4.86E-03	BF_3 tube; Am-241 for TRU calc.
2095	19.1	8.54E+01	±	1.51E+01	1.57E-02	1.57E-02	HEPA filter; Pu-239 MDA
1764	20.9	4.66E+01	±	8.08E+00	9.23E-03	9.23E-03	Glove bag; Pu-239 MDA
1753	12	5.56E+01	±	9.51E+00	6.15E-03	1.10E-02	Waste items
1749	13.6	5.38E+01	±	9.42E+00	8.79E-03	8.79E-03	HEPA filter; Pu-239 MDA
1621	14.1	2.07E+01	±	5.71E+00	2.60E-03	5.56E-03	Glove bag;
1763	36.6	4.16E+01	±	8.09E+00	1.21E-02	2.25E-02	Flow meter
1762	36.6	6.90E+01	±	1.19E+01	1.99E-02	3.37E-02	Flow meter
1624	22.3	1.50E+02	±	1.86E+01	3.20E-02	3.20E-02	Hold down; Pu-239 MDA
1700	20.9	2.77E+02	±	7.02E+01	3.26E-02	3.26E-02	Hold down; Pu-239 MDA
1346	24.5	7.50E+01	±	9.77E+00	1.58E-02	2.40E-02	C-channel

7	TRU packages
16	LLW packages

Control Charts

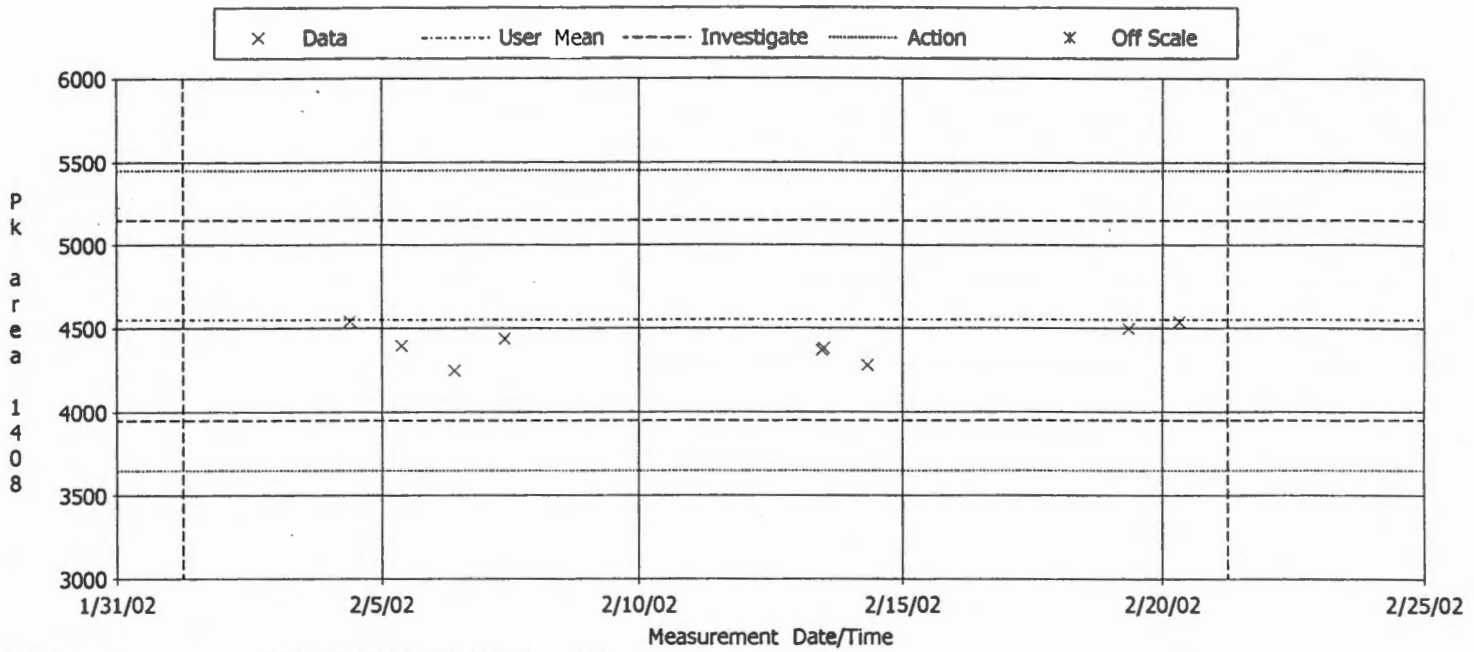

QA Filename : C:\GENIE2K\CAMFILES\qa 7219.qaf
Parameter Description : Pk area 1408 (counts)
Selection Dates : 2/01/02 6:00:00 AM - 2/21/02 6:00:00 AM
User Mean +/- Std Dev : 4550.000 +/- 3.00e+002

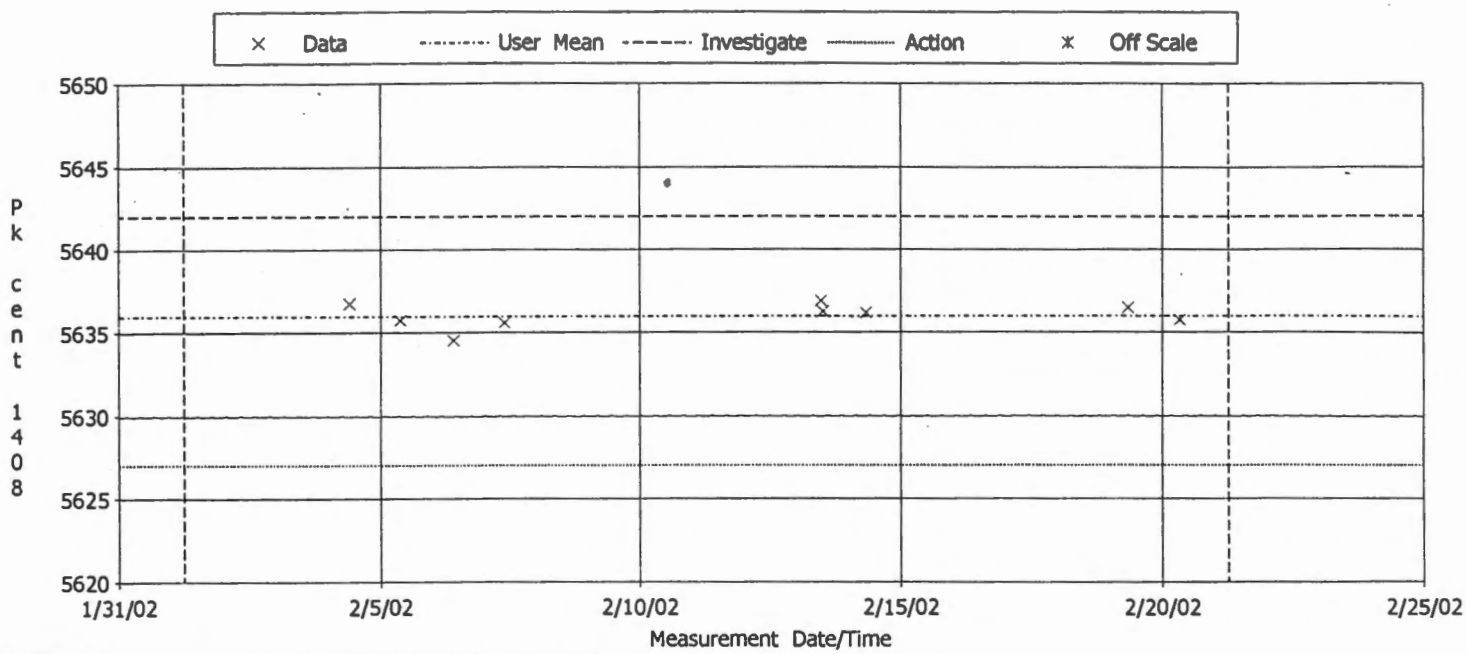

QA Filename : C:\GENIE2K\CAMFILES\qa 7219.qaf
Parameter Description : Pk cent 1408 (ch)
Selection Dates : 2/01/02 6:00:00 AM - 2/21/02 6:00:00 AM
User Mean +/- Std Dev : 5636.000 +/- 3.000

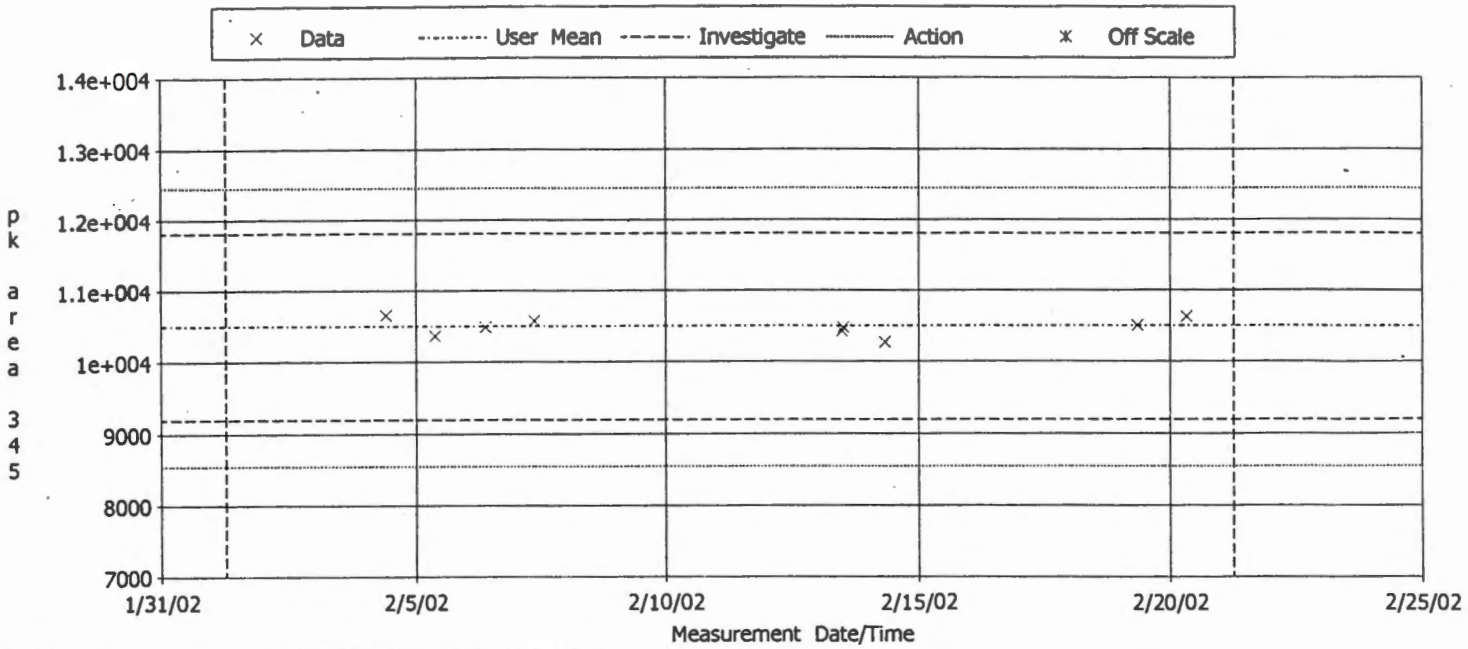

QA Filename : C:\GENIE2K\CAMFILES\qa 7219.qaf
Parameter Description : pk area 345 (counts)
Selection Dates : 2/01/02 6:00:00 AM - 2/21/02 6:00:00 AM
User Mean +/- Std Dev : 10500.000 +/- 6.50e+002

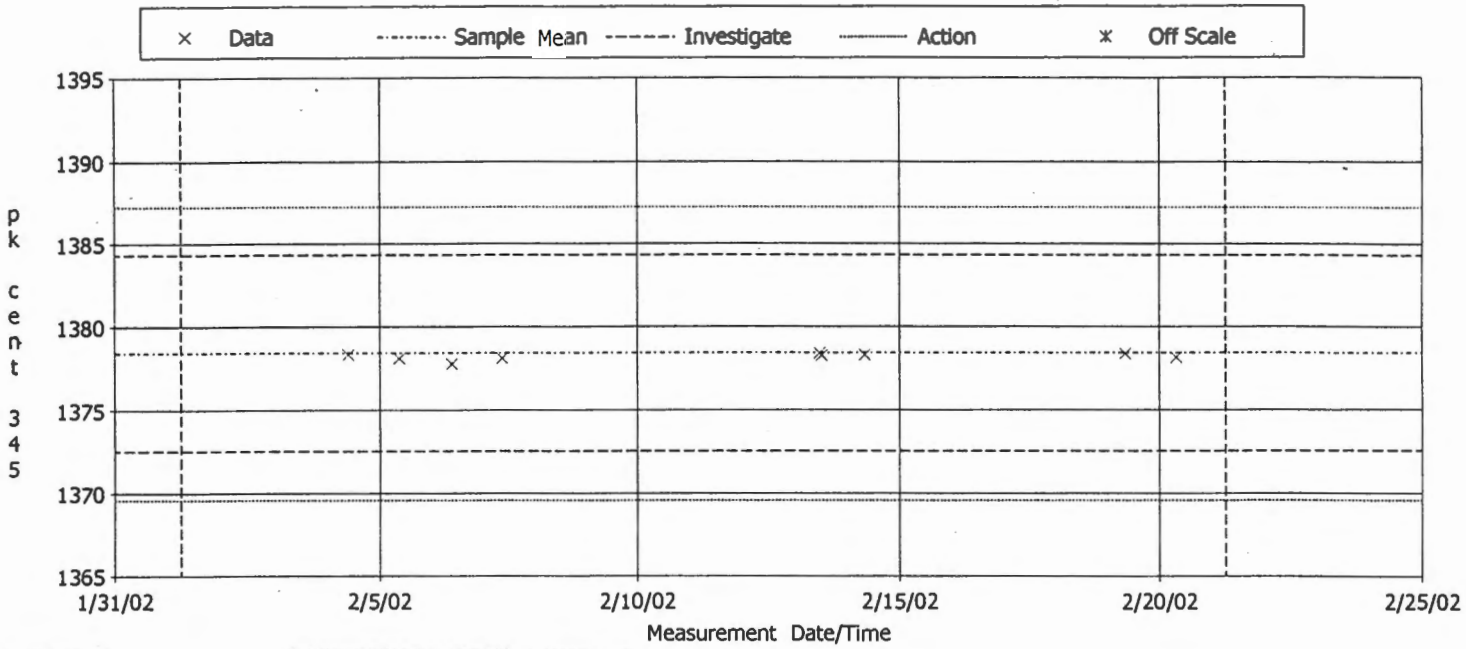

QA Filename : C:\GENIE2K\CAMFILES\qa 7219.qaf
Parameter Description : pk cent 345 (ch)
Selection Dates : 2/01/02 6:00:00 AM - 2/21/02 6:00:00 AM
Sample Mean +/- Std Dev : 1378.414 +/- 2.947

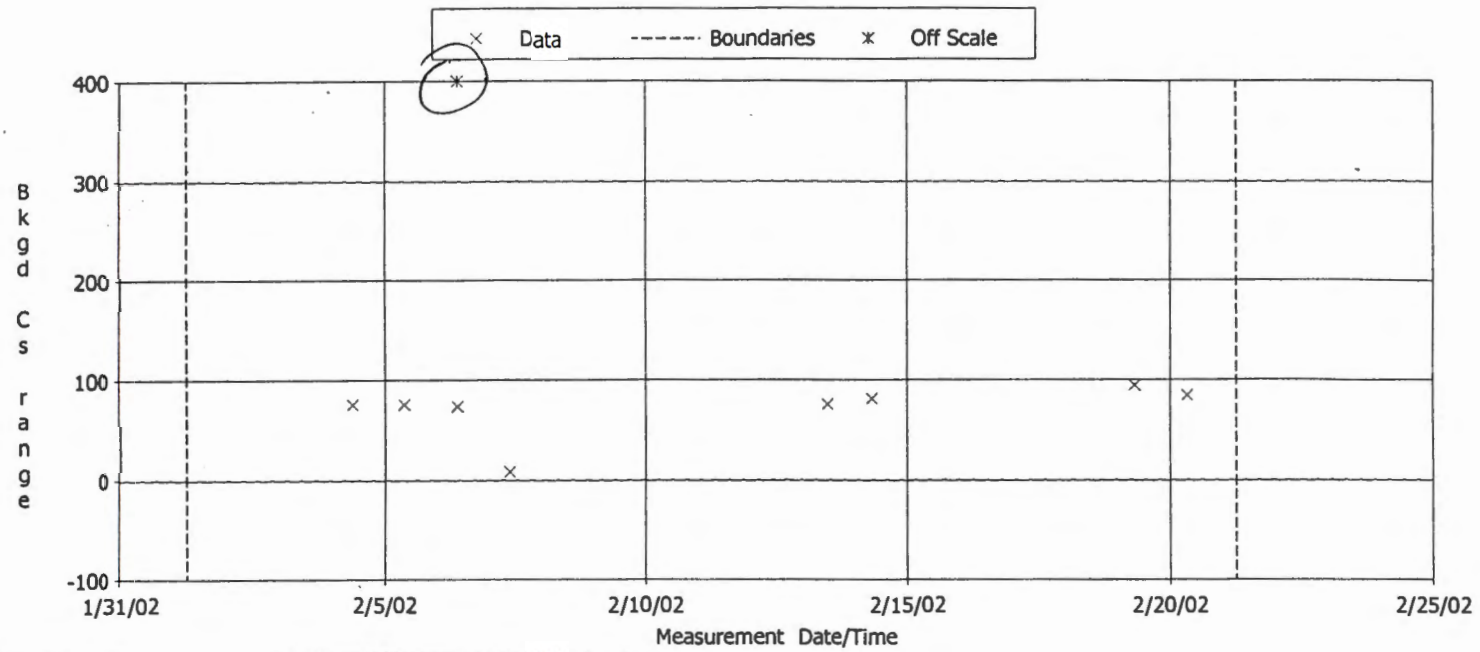

QA Filename : C:\GENIE2K\CAMFILES\7219bkgd.qaf
Parameter Description : Bkgd Cs range (counts)
Selection Dates : 2/01/02 6:00:00 AM - 2/21/02 6:00:00 AM
Lower/Upper Boundaries : 0.000 - 300.000

BKG HIGH DUE TO DET BEING POSITIONED IN WRONG SPOT. MW 2/20/02 2ND PASSED

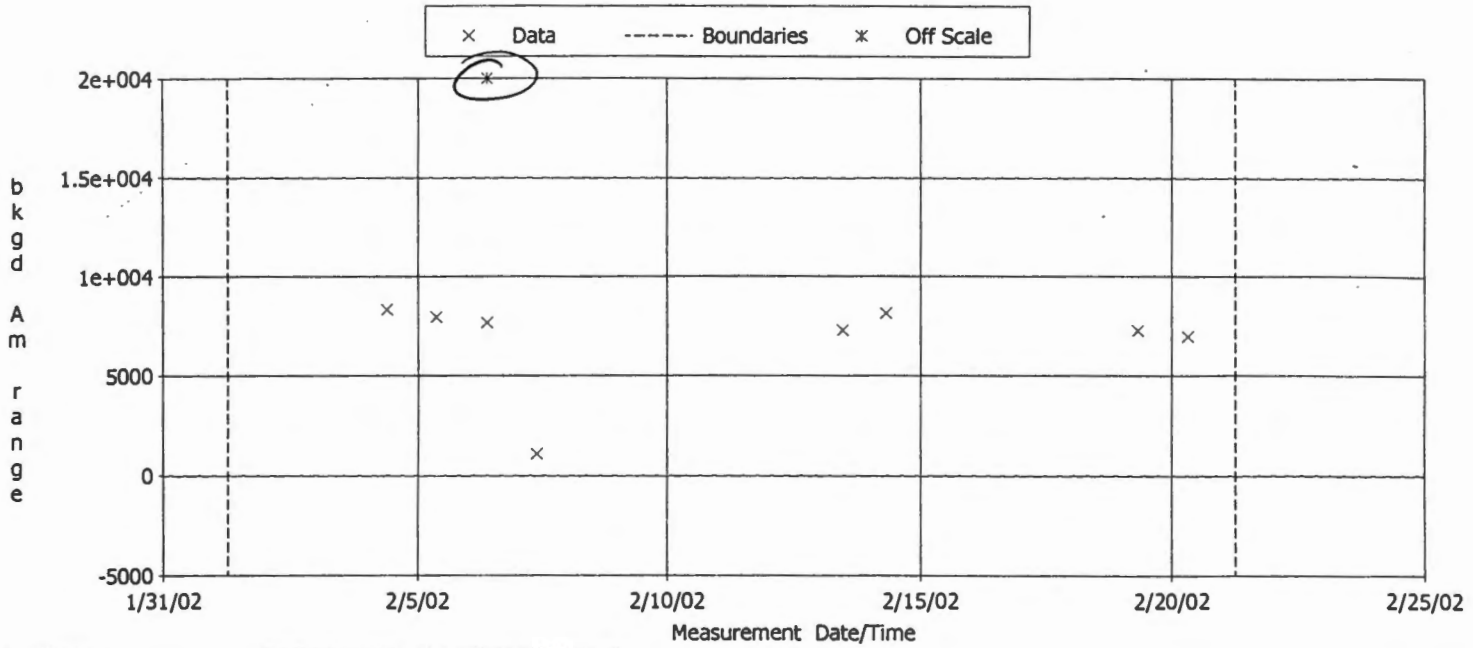

QA Filename : C:\GENIE2K\CAMFILES\7219bkgd.qaf
Parameter Description : bkgd Am range (counts)
Selection Dates : 2/01/02 6:00:00 AM - 2/21/02 6:00:00 AM
Lower/Upper Boundaries : 0.000 - 15000.000

BKG HIGH DUE TO DETECTOR BEING IN WRONG POSITION. 2ND PLACED

MW 2/20/02

Data Packages

Bldg 233s
NDA Item Description Sheet
Box Geometry

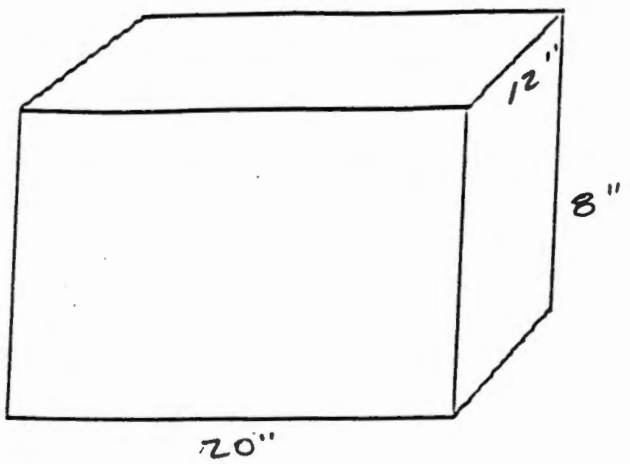

Put Dimensions on Box

Item ID: 5932

Weight (kg): 22 Lbs. 10 kg 0.317832

Material Description: PORTIA BLAN

Packaging: 3 LAYER POLY

Detector Distance (in): 24"

Detector Filters: NONE

Dose Rate: <.5

Comments: A 900 1193
B 1800 1194

233-S Item Analysis

Spreadsheet Version 3.0b

1/14/02

Sample Info:

Item ID: 5932

File Name: 1194

Assay Date: 6-Feb-02

File Name:

Data Input:

Isotope	Activity (uCi/kg)	Meas Uncert	Activity (uCi/kg)	Meas Uncert
Pu-239 (129)	2.80E+01	8.29E+00		
Pu-239 (414)				
Am-241	3.62E+01	3.70E+00		
Np-237	1.67E-02	1.41E-03		
U-238				
U-235				
Cs-137	1.20E-03	2.08E-04		
Co-60				

Item Parameters:

Contamination: Surface only

Item Type: Bag

Calcs: Use 1st

Dimensions:

Length (in): 20

Width (in): 12

Depth (in): 8

Weight (lbs): 22

Depth for TMU (in): 4

% Volume: 100

Am-241 Calcs:

Measured	3.62E+01	+/-	5.51E+01	Calc from Pu-239
Calculated	3.87E+01	+/-	5.11E+01	

Nuclide Activities:

Isotope	Activity (nCi/g)		Total Unc 1 sigma
Pu-238	1.13E+01	+/-	5.90E+00
Pu-239	2.80E+01	+/-	1.45E+01
Pu-240	1.46E+01	+/-	7.58E+00
Pu-241	5.44E+01	+/-	2.83E+01
Pu-242	1.47E-02	+/-	7.66E-03
Am-241	3.87E+01	+/-	5.11E+01
Np-237	1.67E-02	+/-	3.99E-03
U-238	0.00E+00	+/-	0.00E+00
U-235	0.00E+00	+/-	0.00E+00
Cs-137	1.20E-03	+/-	3.39E-04
Co-60	0.00E+00	+/-	0.00E+00

Results:

Total TRU Activity(nCi/g):		9.26E+01	+/-	5.40E+01	Calc from Pu-239 Act
Pu (g):	5.21E-03	**Pu (g) + 3 sigma TMU:**		1.33E-02	
		Pu(g) + 3 sigma:		9.83E-03	

Comments:

Np-237 ratio is just over and does not affect final values.

Errors:High Np-237 ratio,

Analyst: Martin Winterrose

Date: 2/6/02

```
#Date & Time: Wed Feb 06 10:03:05 2002
~g=SIMPLE_BOX
~description=5932
~comment=PORTABAN_SAW
~Ccollimator=50MM-180D
~crpn=4
~Detector=7219
~Convergence in %=1            ~MDRPN=4
~Lunit=IN  ~Tunit=C  ~Dunit=G/CU.C    ~Punit=MM.HG
~at=20        ~ap=760       ~rh=50
~Energies kev=   59.540,   88.030,  122.060,  165.850,  391.690,  661.650,#
                898.020, 1173.220, 1332.490, 1836.010,
~Error in %=     10.000,   10.000,   10.000,    8.000,    8.000,    6.000,#
                  6.000,    4.000,    4.000,    4.000,
~d1.1=0.0312    ~d1.2=20        ~d1.3=8         ~d1.4=12        ~1mater=LPOLYETH ~1den=0.92
~d3.1=7.95      ~3mater=SAMPLES  ~3den=0.3178    ~3con=1
~sd1=24
```

C A N B E R R A I S O C S A N A L Y S I S

Report Generated On : 2/06/02 10:39:49 AM

Sample Title : 5932 Side B
Spectrum Description :
Sample Identification : 1194
Sample Size : 10.0 kg

Sample Taken On : 2/06/02 10:22:00 AM
Acquisition Started : 2/06/02 10:24:53 AM

Live Time: 1800.0 seconds Real Time: 1816.9 seconds

ISOCS Calabration : 5932
Energy Calibration Used Done On : 2/27/01
Efficiency Calibration Used Done On : 2/06/02

P E A K A N A L Y S I S R E P O R T

Peak No.	Peak centroid	Energy (keV)	Net Peak Area	Net Area Uncert.	Continuum Counts
1	239.18	59.88	4.39E+005	14690.6	5.48E+003
2	339.81	85.03	6.53E+002	99.73	2.80E+003
3	382.74	95.76	2.29E+002	55.66	2.76E+003
4	395.91	99.05	8.52E+002	68.35	2.74E+003
5	413.51	103.45	5.76E+002	58.27	2.68E+003
6	444.93	111.30	1.45E+002	47.72	2.74E+003
7	518.39	129.66	2.01E+002	48.54	2.30E+003
8	1201.18	300.30	9.45E+001	16.28	1.78E+002
9	1248.29	312.08	5.82E+002	27.86	1.69E+002
10	1361.23	340.30	5.36E+001	13.76	1.52E+002
11	1407.97	351.98	1.19E+002	15.83	1.39E+002
12	1500.72	375.16	5.28E+001	12.76	1.16E+002
13	1664.24	416.03	3.71E+001	11.30	9.59E+001
14	2043.37	510.78	1.24E+002	14.24	6.97E+001
15	2437.59	609.30	1.50E+002	14.44	5.22E+001
16	2646.46	661.50	6.52E+001	10.94	4.20E+001
17	7064.16	1765.57	5.14E+001	8.27	9.86E-001

NUCLIDE IDENTIFICATION REPORT

Nuclide Name	Id Confidence	Energy (keV)	Yield (%)	Activity (uCi)	Activity Uncertainty
CS-137	0.999	661.65*	85.12	1.19606E-003	2.07825E-004
NP-237	0.999	300.17*	6.20	1.54620E-002	2.88124E-003
		312.00*	36.00	1.67217E-002	1.41139E-003
		340.60*	4.20	1.38285E-002	3.66298E-003
		375.00*	0.68	8.88003E-002	2.21334E-002
		415.60*	1.75	2.57499E-002	7.96834E-003
Pu-239	0.741	129.28*	0.01	2.79641E+001	8.28677E+000
		375.00*	0.00	3.81616E+001	9.81348E+000
		413.70	0.00		
		451.50 @	0.00		
AM-241	0.995	59.54*	35.70	3.61547E+001	3.70287E+000
		125.28	0.00		
		335.40	0.00		
		662.42* @	0.00	2.82801E+002	4.91332E+001
		722.70	0.00		

INTERFERENCE CORRECTED REPORT

Nuclide Name	Nuclide Id Confidence	Wt mean Activity (uCi/kg)	Wt mean Activity Uncertainty
CS-137	0.999	1.043148E-003	2.083894E-004
NP-237	0.999	1.641944E-002	1.183394E-003
Pu-239 @	0.741	2.905784E+001	5.615333E+000
AM-241 @	0.995	3.615472E+001	3.702869E+000

? = nuclide is part of an undetermined solution
X = nuclide rejected by the interference analysis
@ = nuclide contains energy lines not used in Weighted Mean Activity

Errors quoted at 1.000 sigma

****
***** N U C L I D E M D A R E P O R T *****
****

	Nuclide Name	Energy (keV)	Yield (%)	Line MDA (uCi/kg)	Nuclide MDA (uCi/kg)	Activity (uCi/kg)
	CO-60	1173.22	100.00	1.0035E-003	8.41E-004	-6.1571E-004
		1332.49	100.00	8.4071E-004		-1.7722E-004
	CS-134	475.35	1.46	6.8109E-002	1.16E-003	1.2610E-002
		563.23	8.38	1.1928E-002		-2.6427E-003
		569.32	15.43	6.4556E-003		-2.3479E-003
		604.70	97.60	1.3026E-003		-1.3739E-004
		795.84	85.40	1.1615E-003		7.4662E-004
		801.93	8.73	1.1486E-002		3.9902E-003
		1038.57	1.00	9.9048E-002		-1.3430E-002
		1167.94	1.80	5.5891E-002		-5.6706E-002
		1365.15	3.04	2.6564E-002		-9.0993E-003
+	CS-137	661.65*	85.12	6.0310E-004	6.03E-004	1.1961E-003
+	NP-237	300.17*	6.20	1.0602E-002	1.81E-003	1.5462E-002
		312.00*	36.00	1.8135E-003		1.6722E-002
		340.60*	4.20	1.5510E-002		1.3828E-002
		375.00*	0.68	8.8929E-002		8.8800E-002
		415.60*	1.75	3.3473E-002		2.5750E-002
+	Pu-239	129.28*	0.01	3.1462E+001	3.15E+001	2.7964E+001
		375.00*	0.00	3.8217E+001		3.8162E+001
		413.70	0.00	7.2978E+001		4.7332E+001
		451.50	0.00	5.2099E+002		4.7214E+002
+	AM-241	59.54*	35.70	2.8600E-002	2.86E-002	3.6155E+001
		125.28	0.00	8.5425E+001		8.7857E+000
		335.40	0.00	2.3083E+002		-1.2730E+001
		662.42*	0.00	1.4260E+002		2.8280E+002
		722.70	0.00	7.9381E+002		2.8389E+002
	PU-241	114.00	0.02	1.6508E+001	1.65E+001	2.6972E+000
		332.60	0.00	3.7837E+001		8.2755E+000
	CM-243	209.70	3.27	4.3580E-002	8.44E-003	2.6521E-002
		228.18	10.56	1.1750E-002		2.0575E-003
		277.60	14.00	8.4441E-003		-4.3807E-004

+ = Nuclide identified during the nuclide identification
* = Energy line found in the spectrum
> = MDA value not calculated
@ = Half-life too short to be able to perform the decay correction

N U C L I D E T O T A L S

Nuclide	Mass (g)
Pu-239	4.69E-003 +/- 9.06E-004

Bldg 233s
NDA Item Description Sheet
Box Geometry

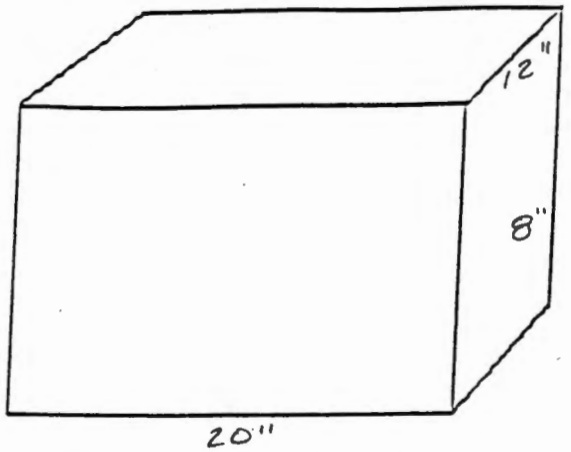

Put Dimensions on Box

Item ID: 5928

Weight (kg): 22LBS

Material Description: PORTA BYAN

Packaging: 3 + LAYERS

Detector Distance (in): 24

Detector Filters: NONE

Dose Rate: <.5

Comments: A 900 1195
B 1800 1196

233-S Item Analysis

Spreadsheet Version 3.0b

1/14/02

Sample Info:

Item ID: 5928

File Name: 1196

Assay Date: 6-Feb-02

File Name:

Data Input:

Isotope	Activity (uCi/kg)	Meas Uncert	Activity (uCi/kg)	Meas Uncert
Pu-239 (129)				
Pu-239 (414)	2.20E+02	2.50E+01		
Am-241	1.48E+02	1.50E+01		
Np-237	3.09E-02	2.38E-03		
U-238				
U-235				
Cs-137	1.33E-03	3.62E-04		
Co-60				

Item Parameters:

Contamination: Surface only

Item Type: Bag

Calcs: Use 1st

Dimensions:

Length (in): 20

Width (in): 12

Depth (in): 8

Weight (lbs): 22

Depth for TMU (in): 4

% Volume: 100

Am-241 Calcs:

Measured	1.48E+02	+/-	2.26E+02	Use Meas
Calculated	3.04E+02	+/-	2.10E+02	

Nuclide Activities:

Isotope	Activity (nCi/g)		Total Unc 1 sigma
Pu-238	8.90E+01	+/-	2.24E+01
Pu-239	2.20E+02	+/-	5.53E+01
Pu-240	1.14E+02	+/-	2.88E+01
Pu-241	4.28E+02	+/-	1.08E+02
Pu-242	1.16E-01	+/-	2.91E-02
Am-241	1.48E+02	+/-	2.26E+02
Np-237	3.09E-02	+/-	7.30E-03
U-238	0.00E+00	+/-	0.00E+00
U-235	0.00E+00	+/-	0.00E+00
Cs-137	1.33E-03	+/-	4.68E-04
Co-60	0.00E+00	+/-	0.00E+00

Results:

Total TRU Activity(nCi/g):	5.71E+02	+/-	2.35E+02	Calc from Pu-239 Act
Pu (g):	4.09E-02	**Pu (g) + 3 sigma TMU:**	7.18E-02	
		Pu(g) + 3 sigma:	5.49E-02	

Comments:

Errors:

Analyst: Martin Winterrose

Date: 2/6/02

```
#Date & Time: Wed Feb 06 10:54:31 2002
~g=SIMPLE_BOX
~description=5928
~comment=PORTABAN_SAW
~Ccollimator=50MM-180D
~crpn=4
~Detector=7219
~Convergence in %=1            ~MDRPN=4
~Lunit=IN  ~Tunit=C  ~Dunit=G/CU.C    ~Punit=MM.HG
~at=20        ~ap=760       ~rh=50
~Energies kev=   59.540,   88.030,  122.060,  165.850,  391.690,  661.650,#
                898.020, 1173.220, 1332.490, 1836.010,
~Error in %=     10.000,   10.000,   10.000,    8.000,    8.000,    6.000,#
                  6.000,    4.000,    4.000,    4.000,
~d1.1=0.0312    ~d1.2=20        ~d1.3=8         ~d1.4=12        ~1mater=LPOLYETH ~1den=0.92
~d3.1=7.95      ~3mater=SAMPLES  ~3den=0.3178    ~3con=1
~sd1=24
```

C A N B E R R A I S O C S A N A L Y S I S

Report Generated On : 2/06/02 11:30:11 AM

Sample Title : 5928 Side B
Spectrum Description :
Sample Identification : 1196
Sample Size : 10.0 kg

Sample Taken On : 2/06/02 11:14:00 AM
Acquisition Started : 2/06/02 11:14:50 AM

Live Time: 1800.0 seconds Real Time: 1861.8 seconds

ISOCS Calabration : 5928
Energy Calibration Used Done On : 2/27/01
Efficiency Calibration Used Done On : 2/06/02

P E A K A N A L Y S I S R E P O R T

Peak No.	Peak centroid	Energy (keV)	Net Peak Area	Net Area Uncert.	Continuum Counts
1	239.18	59.88	1.80E+006	55996.0	2.32E+004
2	340.02	85.08	9.06E+002	111.70	5.26E+003
3	379.58	94.97	1.14E+003	78.01	4.69E+003
4	395.75	99.01	4.13E+003	221.35	4.43E+003
5	445.57	111.46	5.43E+002	61.19	3.83E+003
6	459.23	114.87	2.41E+002	58.19	3.66E+003
7	477.14	119.35	6.12E+002	60.70	3.43E+003
8	502.35	125.65	4.41E+002	52.45	3.08E+003
9	518.57	129.71	1.77E+003	57.44	2.83E+003
10	833.10	208.31	4.95E+002	31.38	4.85E+002
11	1201.48	300.38	1.99E+002	19.86	1.91E+002
12	1248.31	312.08	1.08E+003	35.93	1.84E+002
13	1331.76	332.94	1.02E+002	16.99	1.71E+002
14	1363.05	340.76	1.15E+002	23.61	1.59E+002
15	1379.18	344.79	1.21E+002	22.32	1.51E+002
16	1501.01	375.24	2.94E+002	21.27	1.26E+002
17	1572.37	393.07	9.13E+001	14.32	1.16E+002
18	1656.08	413.99	2.75E+002	20.25	9.47E+001
19	1807.87	451.93	5.03E+001	11.78	8.67E+001
20	2044.00	510.94	1.50E+002	15.97	6.33E+001
21	2437.16	609.20	1.45E+002	14.37	5.13E+001
22	2646.43	661.50	7.25E+001	19.45	4.14E+001
23	2649.26	662.20	3.76E+001	19.24	4.49E+001
24	3646.86	911.52	5.52E+001	9.37	3.11E+001
25	4482.35	1120.33	4.96E+001	9.41	2.37E+001
26	7063.40	1765.38	5.08E+001	8.13	1.50E+000

N U C L I D E I D E N T I F I C A T I O N R E P O R T

Nuclide Name	Id Confidence	Energy (keV)	Yield (%)	Activity (uCi)	Activity Uncertainty
CS-137	0.999	661.65*	85.12	1.33107E-003	3.61970E-004
NP-237	0.996	300.17*	6.20	3.25061E-002	3.98776E-003
		312.00*	36.00	3.08894E-002	2.38264E-003
		340.60*	4.20	2.96992E-002	6.39488E-003
		375.00*	0.68	4.94709E-001	4.67357E-002
		415.60*	1.75	1.90044E-001	1.76452E-002
Pu-239	0.994	129.28*	0.01	2.46422E+002	4.29959E+001
		375.00*	0.00	2.12600E+002	2.41732E+001
		413.70*	0.00	2.19620E+002	2.50465E+001
		451.50* @	0.00	3.37496E+002	8.10311E+001
AM-241	0.995	59.54*	35.70	1.48009E+002	1.50497E+001
		125.28*	0.00	9.64648E+001	1.27989E+001
		335.40	0.00		
		662.42* @	0.00	1.63335E+002	8.38494E+001
		722.70	0.00		
PU-241	0.973	114.00*	0.02	9.57433E+000	2.39011E+000
		332.60*	0.00	3.77880E+001	6.77340E+000

I N T E R F E R E N C E C O R R E C T E D R E P O R T

Nuclide Name	Nuclide Id Confidence	Wt mean Activity (uCi/kg)	Wt mean Activity Uncertainty
CS-137	0.999	1.331066E-003	3.619698E-004
NP-237	0.996	3.076897E-002	1.940967E-003
Pu-239 @	0.994	2.154292E+002	1.081627E+001
AM-241 @	0.995	1.180979E+002	9.749859E+000
PU-241	0.973	1.269836E+001	2.253900E+000

? = nuclide is part of an undetermined solution
X = nuclide rejected by the interference analysis
@ = nuclide contains energy lines not used in Weighted Mean Activity

Errors quoted at 1.000 sigma

****
***** N U C L I D E M D A R E P O R T *****
****

	Nuclide Name	Energy (keV)	Yield (%)	Line MDA (uCi/kg)	Nuclide MDA (uCi/kg)	Activity (uCi/kg)
	CO-60	1173.22	100.00	1.0035E-003	9.55E-004	-1.3780E-004
		1332.49	100.00	9.5496E-004		-1.4610E-004
	CS-134	475.35	1.46	6.8892E-002	1.11E-003	3.3055E-002
		563.23	8.38	1.1649E-002		-9.9440E-003
		569.32	15.43	6.2232E-003		-2.1591E-003
		604.70	97.60	1.3322E-003		4.4175E-004
		795.84	85.40	1.1085E-003		6.5522E-004
		801.93	8.73	1.0030E-002		-1.4599E-002
		1038.57	1.00	9.9953E-002		5.7206E-002
		1167.94	1.80	5.5034E-002		1.9743E-002
		1365.15	3.04	2.6048E-002		9.9165E-005
+	CS-137	661.65*	85.12	5.9906E-004	5.99E-004	1.3311E-003
+	NP-237	300.17*	6.20	1.0968E-002	1.89E-003	3.2506E-002
		312.00*	36.00	1.8933E-003		3.0889E-002
		340.60*	4.20	1.5819E-002		2.9699E-002
		375.00*	0.68	9.2561E-002		4.9471E-001
		415.60*	1.75	3.3183E-002		1.9004E-001
+	Pu-239	129.28*	0.01	3.4864E+001	3.49E+001	2.4642E+002
		375.00*	0.00	3.9778E+001		2.1260E+002
		413.70*	0.00	3.8348E+001		2.1962E+002
		451.50*	0.00	3.0860E+002		3.3750E+002
+	AM-241	59.54*	35.70	5.8662E-002	5.87E-002	1.4801E+002
		125.28*	0.00	5.7063E+001		9.6465E+001
		335.40	0.00	2.8489E+002		3.8979E+002
		662.42*	0.00	1.4712E+002		1.6334E+002
		722.70	0.00	8.0503E+002		4.0585E+002
+	PU-241	114.00*	0.02	1.1283E+001	1.13E+001	9.5743E+000
		332.60*	0.00	2.3517E+001		3.7788E+001
	CM-243	209.70	3.27	5.2390E-002	8.49E-003	3.9215E-002
		228.18	10.56	1.2317E-002		-9.2221E-003
		277.60	14.00	8.4948E-003		1.4399E-003

+ = Nuclide identified during the nuclide identification
* = Energy line found in the spectrum
> = MDA value not calculated
@ = Half-life too short to be able to perform the decay correction

N U C L I D E T O T A L S

Nuclide	Mass (g)
Pu-239	3.47E-002 +/- 1.74E-003

Bldg 233s
NDA Item Description Sheet
Box Geometry

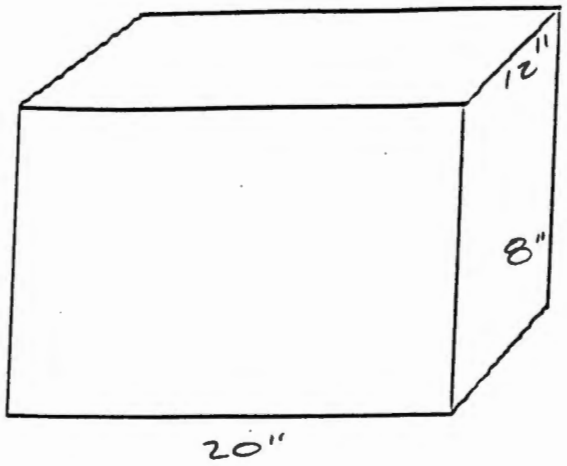

Put Dimensions on Box

Item ID: 5140

Weight (kg): 22 LBS

Material Description: PORTABAN

Packaging: 3+ Layers Poly

Detector Distance (in): 24

Detector Filters: NONE

Dose Rate: 2.5

Comments: A 900 1197
B 1800 1192

233-S Item Analysis

Spreadsheet Version 3.0b

1/14/02

Sample Info:

Item ID: 5140

File Name: 1198

Assay Date: 6-Feb-02

File Name:

Data Input:

Isotope	Activity (uCi/kg)	Meas Uncert	Activity (uCi/kg)	Meas Uncert
Pu-239 (129)				
Pu-239 (414)	4.83E+01	1.07E+01		
Am-241	2.18E+01	2.24E+00		
Np-237	9.69E-03	9.30E-04		
U-238				
U-235				
Cs-137	1.12E-03	2.04E-04		
Co-60				

Item Parameters:

Contamination: Surface only

Item Type: Bag

Calcs: Use 1st

Dimensions:

Length (in): 20

Width (in): 12

Depth (in): 8

Weight (lbs): 22

Depth for TMU (in): 4

% Volume: 100

Am-241 Calcs:

Measured	2.18E+01	+/-	3.32E+01	Use Meas
Calculated	6.69E+01	+/-	5.59E+01	

Nuclide Activities:

Isotope	Activity (nCi/g)		Total Unc 1 sigma
Pu-238	1.96E+01	+/-	6.17E+00
Pu-239	4.83E+01	+/-	1.52E+01
Pu-240	2.52E+01	+/-	7.94E+00
Pu-241	9.41E+01	+/-	2.97E+01
Pu-242	2.54E-02	+/-	8.02E-03
Am-241	2.18E+01	+/-	3.32E+01
Np-237	9.69E-03	+/-	2.36E-03
U-238	0.00E+00	+/-	0.00E+00
U-235	0.00E+00	+/-	0.00E+00
Cs-137	1.12E-03	+/-	3.23E-04
Co-60	0.00E+00	+/-	0.00E+00

Results:

Total TRU Activity(nCi/g):		1.15E+02	+/-	3.79E+01	Calc from Pu-239 Act
Pu (g):	9.00E-03	**Pu (g) + 3 sigma TMU:**		1.75E-02	
		Pu(g) + 3 sigma:		1.50E-02	

Comments:

Errors:

Analyst: Martin Winterrose

Date: 2/6/02

```
#Date & Time: Wed Feb 06 12:48:51 2002
~g=SIMPLE_BOX
~description=5140
~comment=PORTABAN_SAW
~Ccollimator=50MM-180D
~crpn=4
~Detector=7219
~Convergence in %=1            ~MDRPN=4
~Lunit=IN  ~Tunit=C  ~Dunit=G/CU.C    ~Punit=MM.HG
~at=20        ~ap=760       ~rh=50
~Energies kev=   59.540,   88.030,  122.060,  165.850,  391.690,  661.650,#
                898.020, 1173.220, 1332.490, 1836.010,
~Error in %=     10.000,   10.000,   10.000,    8.000,    8.000,    6.000,#
                  6.000,    4.000,    4.000,    4.000,
~d1.1=0.0312    ~d1.2=20        ~d1.3=8         ~d1.4=12        ~1mater=LPOLYETH ~1den=0.92
~d3.1=7.95      ~3mater=SAMPLES  ~3den=0.3178    ~3con=1
~sd1=24
```

C A N B E R R A I S O C S A N A L Y S I S

Report Generated On : 2/06/02 1:29:29 PM

Sample Title : 5140 Side B
Spectrum Description :
Sample Identification : 1198
Sample Size : 10.0 kg

Sample Taken On : 2/06/02 1:13:00 PM
Acquisition Started : 2/06/02 1:14:19 PM

Live Time: 1800.0 seconds Real Time: 1811.5 seconds

ISOCS Calabration : 5140
Energy Calibration Used Done On : 2/27/01
Efficiency Calibration Used Done On : 2/06/02

P E A K A N A L Y S I S R E P O R T

Peak No.	Peak centroid	Energy (keV)	Net Peak Area	Net Area Uncert.	Continuum Counts
1	239.17	59.88	2.65E+005	9042.04	3.97E+003
2	339.85	85.04	8.32E+002	58.73	2.59E+003
3	350.19	87.62	2.73E+002	55.79	2.60E+003
4	395.83	99.03	7.74E+002	63.46	2.58E+003
5	413.53	103.45	2.98E+002	55.50	2.54E+003
6	445.86	111.53	1.52E+002	47.74	2.62E+003
7	519.10	129.84	3.10E+002	45.32	2.23E+003
8	1201.68	300.43	6.92E+001	14.88	1.72E+002
9	1248.22	312.06	3.37E+002	22.31	1.62E+002
10	1363.26	340.81	4.73E+001	13.50	1.46E+002
11	1408.74	352.18	8.56E+001	15.01	1.30E+002
12	1500.70	375.16	9.33E+001	14.00	1.09E+002
13	1655.67	413.89	6.05E+001	12.35	8.62E+001
14	2043.53	510.82	1.31E+002	16.78	6.98E+001
15	2438.02	609.41	1.20E+002	13.56	5.62E+001
16	2645.97	661.38	6.12E+001	10.78	4.48E+001
17	7063.84	1765.49	3.93E+001	7.74	3.85E+000

NUCLIDE IDENTIFICATION REPORT

Nuclide Name	Id Confidence	Energy (keV)	Yield (%)	Activity (uCi)	Activity Uncertainty
CS-137	0.997	661.65*	85.12	1.12234E-003	2.04088E-004
NP-237	0.995	300.17*	6.20	1.13220E-002	2.56423E-003
		312.00*	36.00	9.69158E-003	9.29924E-004
		340.60*	4.20	1.21946E-002	3.57387E-003
		375.00*	0.68	1.56909E-001	2.54191E-002
		415.60*	1.75	4.18155E-002	8.85885E-003
Pu-239	0.964	129.28*	0.01	4.30751E+001	9.71081E+000
		375.00*	0.00	6.74310E+001	1.17274E+001
		413.70*	0.00	4.83232E+001	1.07260E+001
		451.50 @	0.00		
AM-241	0.995	59.54*	35.70	2.18132E+001	2.23910E+000
		125.28	0.00		
		335.40	0.00		
		662.42* @	0.00	2.65371E+002	4.82501E+001
		722.70	0.00		

INTERFERENCE CORRECTED REPORT

Nuclide Name	Nuclide Id Confidence	Wt mean Activity (uCi/kg)	Wt mean Activity Uncertainty
CS-137	0.997	1.030083E-003	2.042849E-004
NP-237	0.995	9.985014E-003	8.464660E-004
Pu-239	@ 0.964	4.580261E+001	5.031920E+000
AM-241	@ 0.995	2.181322E+001	2.239102E+000

? = nuclide is part of an undetermined solution
X = nuclide rejected by the interference analysis
@ = nuclide contains energy lines not used in Weighted Mean Activity

Errors quoted at 1.000 sigma

****
***** N U C L I D E M D A R E P O R T *****
****

	Nuclide Name	Energy (keV)	Yield (%)	Line MDA (uCi/kg)	Nuclide MDA (uCi/kg)	Activity (uCi/kg)
	CO-60	1173.22	100.00	8.7075E-004	7.07E-004	-9.9295E-004
		1332.49	100.00	7.0652E-004		-1.5457E-004
	CS-134	475.35	1.46	6.4321E-002	1.09E-003	-1.1318E-001
		563.23	8.38	1.1928E-002		9.3768E-003
		569.32	15.43	6.1756E-003		4.9872E-003
		604.70	97.60	1.2641E-003		3.3587E-004
		795.84	85.40	1.0874E-003		-7.8344E-004
		801.93	8.73	1.0722E-002		-3.6698E-003
		1038.57	1.00	9.8592E-002		-1.7680E-002
		1167.94	1.80	5.1454E-002		-6.0246E-003
		1365.15	3.04	2.5253E-002		-1.7795E-002
+	CS-137	661.65*	85.12	6.2084E-004	6.21E-004	1.1223E-003
+	NP-237	300.17*	6.20	1.0423E-002	1.78E-003	1.1322E-002
		312.00*	36.00	1.7775E-003		9.6916E-003
		340.60*	4.20	1.5224E-002		1.2195E-002
		375.00*	0.68	8.6127E-002		1.5691E-001
		415.60*	1.75	3.1748E-002		4.1816E-002
+	Pu-239	129.28*	0.01	3.0944E+001	3.09E+001	4.3075E+001
		375.00*	0.00	3.7013E+001		6.7431E+001
		413.70*	0.00	3.6688E+001		4.8323E+001
		451.50	0.00	5.2099E+002		-1.5467E+002
+	AM-241	59.54*	35.70	2.4382E-002	2.44E-002	2.1813E+001
		125.28	0.00	8.4465E+001		8.0810E+000
		335.40	0.00	2.2416E+002		-7.8879E+000
		662.42*	0.00	1.4679E+002		2.6537E+002
		722.70	0.00	8.1828E+002		3.2754E+002
	PU-241	114.00	0.02	1.6342E+001	1.63E+001	1.0765E+001
		332.60	0.00	3.8554E+001		1.2417E+000
	CM-243	209.70	3.27	4.1248E-002	7.88E-003	-3.1397E-003
		228.18	10.56	1.1689E-002		7.3329E-003
		277.60	14.00	7.8777E-003		-5.0310E-003

+ = Nuclide identified during the nuclide identification
* = Energy line found in the spectrum
> = MDA value not calculated
@ = Half-life too short to be able to perform the decay correction

N U C L I D E T O T A L S

Nuclide	Mass (g)
Pu-239	7.39E-003 +/- 8.12E-004

Bldg 233-S
NDA Item Description Sheet
Pipe Geometry

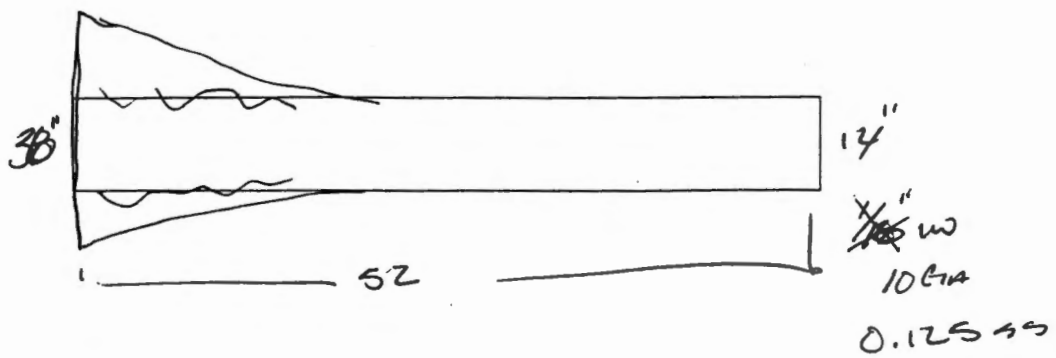

Put Dimensions on Pipe

Item ID: 4816

Weight (kg): 103 46.8 lbs

Material Description: SS Pipe

Packaging: 3 + Padding

Detector Distance (in): 34"

Detector Filters: None

Dose Rate: <.5

Comments: A - 1800s 1199
B - 1800s 1200

233-S Item Analysis

Spreadsheet Version 3.0b

1/14/02

Sample Info:

Item ID: 4816

File Name: 1 99

Assay Date: 6-Feb-02

File Name: 1200

Data Input:

Isotope	Activity (uCi/kg)	Meas Uncert	Activity (uCi/kg)	Meas Uncert
Pu-239 (129)				
Pu-239 (414)	3.32E+01	6.58E+00	1.41E+01	5.30E+00
Am-241	1.23E+02	1.04E+01	1.72E+01	1.45E+00
Np-237	1.08E-02	6.98E-04	5.65E-03	4.54E-04
U-238				
U-235				
Cs-137	9.62E-03	4.34E-04	7.32E-03	3.58E-04
Co-60				

Item Parameters:

Contamination: Internal

Item Type: Pipe or Duct

Calcs: Average

Dimensions:

Length (in): 52

Width (in): 14

Depth (in): 14

Weight (lbs): 103

Depth for TMU (in): 4

% Volume: 100

Am-241 Calcs:

Measured	7.02E+01	+/-	3.19E+01	Calc from Pu-239
Calculated	3.27E+01	+/-	1.97E+01	

Nuclide Activities:

Isotope	Activity (nCi/g)		Total Unc 1 sigma
Pu-238	9.57E+00	+/-	2.03E+00
Pu-239	2.36E+01	+/-	5.00E+00
Pu-240	1.23E+01	+/-	2.61E+00
Pu-241	4.60E+01	+/-	9.74E+00
Pu-242	1.24E-02	+/-	2.63E-03
Am-241	3.27E+01	+/-	1.97E+01
Np-237	8.21E-03	+/-	1.01E-03
U-238	0.00E+00	+/-	0.00E+00
U-235	0.00E+00	+/-	0.00E+00
Cs-137	8.47E-03	+/-	9.88E-04
Co-60	0.00E+00	+/-	0.00E+00

Results:

Total TRU Activity(nCi/g):	7.82E+01	+/-	2.06E+01	Calc from Pu-239 Act
Pu (g):	2.06E-02	**Pu (g) + 3 sigma TMU:**	3.37E-02	
		Pu(g) + 3 sigma:	3.16E-02	

Comments:

Errors:

Analyst: Martin Winterrose

Date: 2/6/02

```
#Date & Time: Thu Feb 21 14:08:06 2002
~g=PIPE
~description=4816_DUCT
~comment=CONE_14_TO_36"
~Ccollimator=50MM-180D
~crpn=4
~Detector=7219
~Convergence in %=1          ~MDRPN=4
~Lunit=IN  ~Tunit=C  ~Dunit=G/CU.C    ~Punit=MM.HG
~at=20        ~ap=760       ~rh=50
~Energies kev=   50.000,  100.000,  128.000,  130.000,  150.000,  200.000,#
                300.000,  500.000,  700.000, 1000.000, 1400.000, 2000.000,#
               4000.000,
~Error in %=     10.000,   10.000,   10.000,   10.000,   10.000,    8.000,#
                  8.000,    6.000,    6.000,    4.000,    4.000,    4.000,#
                  4.000,
~d1.1=0.125     ~d1.2=14        ~d1.3=27        ~d1.4=27        ~1mater=304SS    ~1den=7.81
~d2.1=0.125     ~d2.2=27        ~d2.3=27        ~2mater=DRYDIRT  ~2den=1.6       ~2con=1
~d3.1=13        ~d3.2=27        ~d3.3=27        ~3mater=DRYAIR   ~3den=0.00129
~sd1=34
```

C A N B E R R A I S O C S A N A L Y S I S

Report Generated On : 2/21/02 2:09:34 PM

Sample Title : 4816 Side A
Spectrum Description :
Sample Identification : 1199
Sample Size : 46.8 kg

Sample Taken On : 2/06/02 1:55:00 PM
Acquisition Started : 2/06/02 1:54:09 PM

Live Time: 1800.0 seconds Real Time: 1809.4 seconds

ISOCS Calabration : 4816 DUCT
Energy Calibration Used Done On : 2/27/01
Efficiency Calibration Used Done On : 2/21/02

P E A K A N A L Y S I S R E P O R T

Peak No.	Peak centroid	Energy (keV)	Net Peak Area	Net Area Uncert.	Continuum Counts
1	239.20	59.89	2.22E+005	6531.01	3.78E+003
2	339.99	85.07	8.47E+002	63.07	2.99E+003
3	349.40	87.43	3.14E+002	59.65	3.02E+003
4	395.98	99.07	1.00E+003	69.89	3.04E+003
5	500.28	125.14	1.81E+002	50.09	2.82E+003
6	518.27	129.63	2.70E+002	52.81	2.70E+003
7	833.48	208.41	2.12E+002	24.28	4.82E+002
8	1201.32	300.34	1.17E+002	18.24	2.24E+002
9	1248.40	312.10	7.06E+002	30.76	2.14E+002
10	1363.10	340.77	7.32E+001	15.82	1.87E+002
11	1408.38	352.09	1.23E+002	16.51	1.71E+002
12	1500.58	375.13	9.62E+001	15.02	1.42E+002
13	1654.47	413.59	7.83E+001	14.26	1.07E+002
14	1662.43	415.58	4.00E+001	12.64	1.08E+002
15	2044.88	511.16	1.21E+002	15.12	8.45E+001
16	2436.92	609.14	1.30E+002	14.61	6.13E+001
17	2646.67	661.56	1.03E+003	33.47	5.52E+001
18	3645.28	911.13	6.78E+001	10.32	3.49E+001
19	5846.21	1461.18	5.31E+002	23.72	8.05E+000
20	7063.34	1765.36	6.76E+001	9.35	2.35E+000

N U C L I D E I D E N T I F I C A T I O N R E P O R T

Nuclide Name	Id Confidence	Energy (keV)	Yield (%)	Activity (uCi)	Activity Uncertainty
CS-137	1.000	661.65*	85.12	9.61640E-003	4.34412E-004
NP-237	0.999	300.17*	6.20	1.01499E-002	1.65886E-003
		312.00*	36.00	1.07880E-002	6.97728E-004
		340.60*	4.20	1.00549E-002	2.22181E-003
		375.00*	0.68	8.61049E-002	1.39708E-002
		415.60*	1.75	1.46971E-002	4.68488E-003
Pu-239	0.967	129.28*	0.01	2.44273E+001	6.30342E+000
		375.00*	0.00	3.70033E+001	6.44427E+000
		413.70*	0.00	3.31689E+001	6.57587E+000
		451.50 @	0.00		
AM-241	0.995	59.54*	35.70	1.23306E+002	1.04457E+001
		125.28*	0.00	2.67530E+001	7.51136E+000
		335.40	0.00		
		662.42* @	0.00	2.27374E+003	1.02530E+002
		722.70	0.00		

I N T E R F E R E N C E C O R R E C T E D R E P O R T

Nuclide Name	Nuclide Id Confidence	Wt mean Activity (uCi/kg)	Wt mean Activity Uncertainty
CS-137	1.000	9.364066E-003	4.344005E-004
NP-237	0.999	1.072664E-002	6.120712E-004
Pu-239 @	0.967	2.914508E+001	3.243990E+000
AM-241 @	0.995	5.966218E+001	6.098364E+000

? = nuclide is part of an undetermined solution
X = nuclide rejected by the interference analysis
@ = nuclide contains energy lines not used in Weighted Mean Activity

Errors quoted at 1.000 sigma

****
***** N U C L I D E M D A R E P O R T *****
****

	Nuclide Name	Energy (keV)	Yield (%)	Line MDA (uCi/kg)	Nuclide MDA (uCi/kg)	Activity (uCi/kg)
	CO-60	1173.22	100.00	4.6859E-004	4.26E-004	-2.6511E-004
		1332.49	100.00	4.2563E-004		2.5925E-004
	CS-134	475.35	1.46	3.9570E-002	5.70E-004	-3.5469E-002
		563.23	8.38	6.5219E-003		8.2423E-004
		569.32	15.43	3.5428E-003		3.7395E-004
		604.70	97.60	7.1693E-004		-1.9883E-004
		795.84	85.40	5.7040E-004		-1.0721E-004
		801.93	8.73	5.5580E-003		-2.9194E-003
		1038.57	1.00	4.5668E-002		-2.8234E-002
		1167.94	1.80	2.5978E-002		-3.5202E-003
		1365.15	3.04	1.2864E-002		-8.2652E-004
+	CS-137	661.65*	85.12	3.4714E-004	3.47E-004	9.6164E-003
+	NP-237	300.17*	6.20	6.2900E-003	1.08E-003	1.0150E-002
		312.00*	36.00	1.0803E-003		1.0788E-002
		340.60*	4.20	9.1153E-003		1.0055E-002
		375.00*	0.68	5.2003E-002		8.6105E-002
		415.60*	1.75	1.8790E-002		1.4697E-002
+	Pu-239	129.28*	0.01	2.2150E+001	2.15E+001	2.4427E+001
		375.00*	0.00	2.2348E+001		3.7003E+001
		413.70*	0.00	2.1524E+001		3.3169E+001
		451.50	0.00	3.0188E+002		-3.3481E+002
+	AM-241	59.54*	35.70	1.6016E-001	1.60E-001	1.2331E+002
		125.28*	0.00	3.6910E+001		2.6753E+001
		335.40	0.00	1.3280E+002		3.9287E+001
		662.42*	0.00	8.2080E+001		2.2737E+003
		722.70	0.00	4.0233E+002		4.0160E+002
	PU-241	114.00	0.02	1.3528E+001	1.35E+001	1.1146E+001
		332.60	0.00	2.2381E+001		-1.1195E+000
	CM-243	209.70	3.27	2.5495E-002	4.79E-003	-3.7470E-003
		228.18	10.56	6.6899E-003		-1.0167E-003
		277.60	14.00	4.7917E-003		3.7370E-003

+ = Nuclide identified during the nuclide identification
* = Energy line found in the spectrum
> = MDA value not calculated
@ = Half-life too short to be able to perform the decay correction

N U C L I D E T O T A L S

Nuclide	Mass (g)
Pu-239	2.20E-002 +/- 2.45E-003

C A N B E R R A I S O C S A N A L Y S I S

Report Generated On : 2/21/02 2:10:33 PM

Sample Title : 4816 Side B
Spectrum Description :
Sample Identification : 1200
Sample Size : 46.8 kg

Sample Taken On : 2/06/02 2:26:00 PM
Acquisition Started : 2/06/02 2:27:17 PM

Live Time: 1800.0 seconds Real Time: 1803.7 seconds

ISOCS Calabration : 4816 DUCT
Energy Calibration Used Done On : 2/27/01
Efficiency Calibration Used Done On : 2/21/02

P E A K A N A L Y S I S R E P O R T

Peak No.	Peak centroid	Energy (keV)	Net Peak Area	Net Area Uncert.	Continuum Counts
1	239.21	59.89	3.10E+004	899.75	2.42E+003
2	340.18	85.12	7.59E+002	62.28	2.81E+003
3	351.37	87.92	1.95E+002	58.59	2.84E+003
4	396.38	99.17	2.35E+002	54.44	2.89E+003
5	468.60	117.22	1.38E+002	50.10	2.90E+003
6	517.65	129.47	1.86E+002	47.29	2.59E+003
7	1200.42	300.11	5.09E+001	15.41	2.18E+002
8	1248.24	312.06	3.70E+002	23.84	1.98E+002
9	1362.16	340.53	4.55E+001	13.62	1.65E+002
10	1408.14	352.03	1.28E+002	16.21	1.42E+002
11	1655.35	413.81	3.33E+001	12.22	1.16E+002
12	2045.36	511.28	1.37E+002	15.63	8.80E+001
13	2437.49	609.28	1.54E+002	14.74	6.27E+001
14	2646.61	661.54	7.87E+002	29.39	5.20E+001
15	4482.04	1120.25	5.30E+001	9.39	2.06E+001
16	7061.75	1764.97	5.34E+001	8.23	1.42E+000

NUCLIDE IDENTIFICATION REPORT

Nuclide Name	Id Confidence	Energy (keV)	Yield (%)	Activity (uCi)	Activity Uncertainty
CS-137	1.000	661.65*	85.12	7.32466E-003	3.57795E-004
NP-237	0.974	300.17*	6.20	4.41696E-003	1.35532E-003
		312.00*	36.00	5.64972E-003	4.53522E-004
		340.60*	4.20	6.24355E-003	1.89265E-003
		375.00	0.68		
		415.60*	1.75	1.22005E-002	4.51098E-003
Pu-239	0.708	129.28*	0.01	1.69250E+001	5.14926E+000
		375.00	0.00		
		413.70*	0.00	1.40992E+001	5.29598E+000
		451.50 @	0.00		
AM-241	0.994	59.54*	35.70	1.71997E+001	1.45485E+000
		125.28	0.00		
		335.40	0.00		
		662.42* @	0.00	1.73187E+003	8.44690E+001
		722.70	0.00		

INTERFERENCE CORRECTED REPORT

Nuclide Name	Nuclide Id Confidence	Wt mean Activity (uCi/kg)	Wt mean Activity Uncertainty
CS-137	1.000	7.251914E-003	3.572998E-004
NP-237	0.974	5.520374E-003	4.183291E-004
Pu-239 @	0.708	1.312990E+001	3.353129E+000
AM-241 @	0.994	1.719966E+001	1.454849E+000

? = nuclide is part of an undetermined solution
X = nuclide rejected by the interference analysis
@ = nuclide contains energy lines not used in Weighted Mean Activity

Errors quoted at 1.000 sigma

****
***** N U C L I D E M D A R E P O R T *****
****

	Nuclide Name	Energy (keV)	Yield (%)	Line MDA (uCi/kg)	Nuclide MDA (uCi/kg)	Activity (uCi/kg)
	CO-60	1173.22	100.00	5.0433E-004	4.19E-004	3.3792E-004
		1332.49	100.00	4.1928E-004		-1.8748E-005
	CS-134	475.35	1.46	3.9819E-002	5.88E-004	2.2043E-002
		563.23	8.38	6.1610E-003		1.1811E-003
		569.32	15.43	3.2976E-003		-1.6769E-003
		604.70	97.60	6.7669E-004		-1.3964E-004
		795.84	85.40	5.8797E-004		3.1065E-004
		801.93	8.73	5.5580E-003		-5.1840E-003
		1038.57	1.00	4.8309E-002		-1.5918E-002
		1167.94	1.80	2.7576E-002		-7.2472E-003
		1365.15	3.04	1.1763E-002		-1.3424E-003
+	CS-137	661.65*	85.12	3.3758E-004	3.38E-004	7.3247E-003
+	NP-237	300.17*	6.20	6.2005E-003	1.04E-003	4.4170E-003
		312.00*	36.00	1.0410E-003		5.6497E-003
		340.60*	4.20	8.5757E-003		6.2436E-003
		375.00	0.68	8.7135E-002		2.2721E-002
		415.60*	1.75	1.9406E-002		1.2200E-002
+	Pu-239	129.28*	0.01	2.1733E+001	2.17E+001	1.6925E+001
		375.00	0.00	3.7446E+001		9.7643E+000
		413.70*	0.00	2.2426E+001		1.4099E+001
		451.50	0.00	3.2509E+002		-6.0305E+000
+	AM-241	59.54*	35.70	1.2829E-001	1.28E-001	1.7200E+001
		125.28	0.00	6.0792E+001		-9.3863E+000
		335.40	0.00	1.2617E+002		-6.1328E+001
		662.42*	0.00	7.9819E+001		1.7319E+003
		722.70	0.00	3.8865E+002		1.2469E+002
	PU-241	114.00	0.02	1.3300E+001	1.33E+001	8.3431E+000
		332.60	0.00	2.0746E+001		-5.2527E+000
	CM-243	209.70	3.27	2.4098E-002	4.64E-003	1.9812E-002
		228.18	10.56	6.8022E-003		5.8202E-004
		277.60	14.00	4.6445E-003		1.4631E-004

+ = Nuclide identified during the nuclide identification
* = Energy line found in the spectrum
> = MDA value not calculated
@ = Half-life too short to be able to perform the decay correction

N U C L I D E T O T A L S

Nuclide	Mass (g)
Pu-239	9.91E-003 +/- 2.53E-003

Bldg 233-S
NDA Item Description Sheet
Pipe Geometry

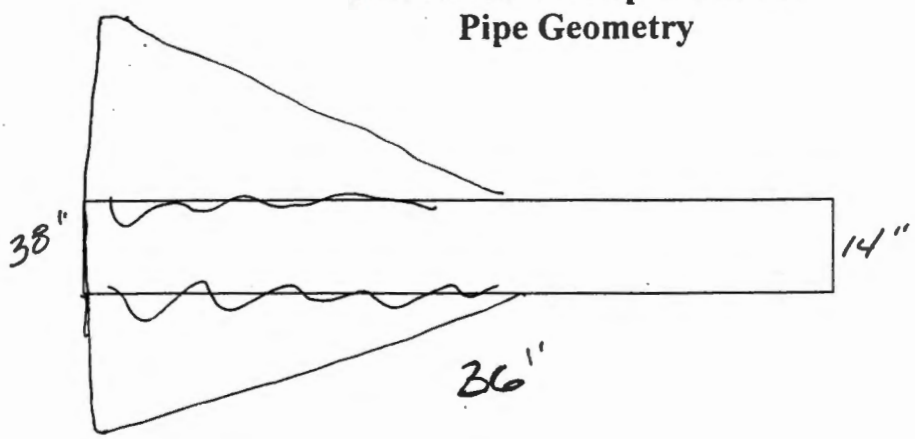

Put Dimensions on Pipe

Item ID: 4817

Weight (kg): 70 Lbs

Material Description: Dirt

Packaging: 3 + Padding

Detector Distance (in): 34'

Detector Filters: None

Dose Rate: <.5

Comments: 1 A 18005 1203
2 B 18005 1204

233-S Item Analysis

Spreadsheet Version 3.0b

1/14/02

Sample Info:

Item ID:	4817	**Assay Date:**	7-Feb-02
File Name:	1203	**File Name:**	1204

Data Input:

Isotope	Activity (uCi/kg)	Meas Uncert	Activity (uCi/kg)	Meas Uncert
Pu-239 (129)	5.30E+01		5.47E+01	
Pu-239 (414)				
Am-241	5.05E-01	5.11E-02	2.29E-01	3.59E-02
Np-237				
U-238				
U-235				
Cs-137	9.35E-03	4.96E-04	8.07E-03	4.53E-04
Co-60				

Item Parameters:

Contamination: Internal | Item Type: Pipe or Duct | Calcs: Average

Dimensions:

Length (in):	26	Width (in):	14	Depth (in):	14
Weight (lbs):	70	Depth for TMU (in):	4	% Volume:	100

Am-241 Calcs:

Measured	3.67E-01	+/-	1.67E-01	Use Meas
Calculated	7.45E+01	+/-	4.70E+01	

Nuclide Activities:

Isotope	Activity (nCi/g)		Total Unc 1 sigma
Pu-238	2.18E+01	+/-	4.90E+00
Pu-239	5.39E+01	+/-	1.21E+01
Pu-240	2.81E+01	+/-	6.30E+00
Pu-241	1.05E+02	+/-	2.35E+01
Pu-242	2.83E-02	+/-	6.36E-03
Am-241	3.67E-01	+/-	1.67E-01
Np-237	0.00E+00	+/-	0.00E+00
U-238	0.00E+00	+/-	0.00E+00
U-235	0.00E+00	+/-	0.00E+00
Cs-137	8.71E-03	+/-	1.03E-03
Co-60	0.00E+00	+/-	0.00E+00

Results:

Total TRU Activity(nCi/g):	1.04E+02	+/-	1.45E+01	Calc from Pu-239 MDA
Pu (g): 3.19E-02	**Pu (g) + 3 sigma TMU:**		5.34E-02	
	Pu(g) + 3 sigma:		3.19E-02	

Comments:

Errors:

Analyst: Martin Winterrose

Date: 2/25/02

```
#Date & Time: Thu Feb 21 14:23:38 2002
~g=PIPE
~description=4817
~comment=CONE_14_TO_36"
~Ccollimator=50MM-180D
~crpn=4
~Detector=7219
~Convergence in %=1          ~MDRPN=4
~Lunit=IN  ~Tunit=C  ~Dunit=G/CU.C    ~Punit=MM.HG
~at=20        ~ap=760       ~rh=50
~Energies kev=   50.000,  100.000,  128.000,  130.000,  150.000,  200.000,#
                300.000,  500.000,  700.000, 1000.000, 1400.000, 2000.000,#
               4000.000,
~Error in %=     10.000,   10.000,   10.000,   10.000,   10.000,    8.000,#
                  8.000,    6.000,    6.000,    4.000,    4.000,    4.000,#
                  4.000,
~d1.1=0.125     ~d1.2=26        ~d1.3=13        ~d1.4=13        ~1mater=304SS    ~1den=7.81
~d2.1=0.125     ~d2.2=13        ~d2.3=13        ~2mater=DRYDIRT  ~2den=1.6       ~2con=1
~d3.1=13        ~d3.2=13        ~d3.3=13        ~3mater=DRYAIR   ~3den=0.00129
~sd1=34
```

C A N B E R R A I S O C S A N A L Y S I S

Report Generated On : 2/21/02 2:24:49 PM

Sample Title : 4817 Side A
Spectrum Description :
Sample Identification : 1203
Sample Size : 31.8 kg

Sample Taken On : 2/07/02 9:25:00 AM
Acquisition Started : 2/07/02 9:26:18 AM

Live Time: 1800.0 seconds Real Time: 1802.4 seconds

ISOCS Calabration : 4817
Energy Calibration Used Done On : 2/27/01
Efficiency Calibration Used Done On : 2/21/02

P E A K A N A L Y S I S R E P O R T

Peak No.	Peak centroid	Energy (keV)	Net Peak Area	Net Area Uncert.	Continuum Counts
1	239.43	59.94	6.51E+002	40.79	1.92E+003
2	340.30	85.15	6.95E+002	62.01	2.43E+003
3	350.45	87.69	1.55E+002	53.29	2.46E+003
4	1408.32	352.07	8.51E+001	14.13	1.14E+002
5	2043.59	510.84	1.40E+002	15.20	7.67E+001
6	2437.46	609.27	1.06E+002	12.81	5.45E+001
7	2646.83	661.60	6.16E+002	26.34	4.33E+001
8	3645.60	911.21	8.12E+001	10.69	2.79E+001

NUCLIDE IDENTIFICATION REPORT

Nuclide Name	Id Confidence	Energy (keV)	Yield (%)	Activity (uCi)	Activity Uncertainty
CS-137	1.000	661.65*	85.12	9.34551E-003	4.96209E-004
AM-241	0.994	59.54*	35.70	5.04980E-001	5.11011E-002
		125.28	0.00		
		335.40	0.00		
		662.42* @	0.00	2.20969E+003	1.17174E+002
		722.70	0.00		

INTERFERENCE CORRECTED REPORT

Nuclide Name	Nuclide Id Confidence	Wt mean Activity (uCi/kg)	Wt mean Activity Uncertainty
CS-137	1.000	9.343374E-003	4.955660E-004
AM-241 @	0.994	5.049800E-001	5.110109E-002

? = nuclide is part of an undetermined solution
X = nuclide rejected by the interference analysis
@ = nuclide contains energy lines not used in Weighted Mean Activity

Errors quoted at 1.000 sigma

****
***** N U C L I D E M D A R E P O R T *****
****

	Nuclide Name	Energy (keV)	Yield (%)	Line MDA (uCi/kg)	Nuclide MDA (uCi/kg)	Activity (uCi/kg)
	CO-60	1173.22	100.00	8.0204E-004	6.47E-004	1.8388E-004
		1332.49	100.00	6.4654E-004		1.2815E-004
	CS-134	475.35	1.46	5.8211E-002	9.35E-004	6.1941E-003
		563.23	8.38	1.0021E-002		-1.4868E-003
		569.32	15.43	5.4804E-003		-3.3365E-004
		604.70	97.60	1.0613E-003		-2.1963E-004
		795.84	85.40	9.3518E-004		3.8057E-004
		801.93	8.73	8.3820E-003		-1.6102E-002
		1038.57	1.00	7.3788E-002		2.6480E-002
		1167.94	1.80	4.3362E-002		2.9524E-003
		1365.15	3.04	2.0199E-002		-4.4856E-004
+	CS-137	661.65*	85.12	5.0554E-004	5.06E-004	9.3455E-003
	NP-237	300.17	6.20	1.5613E-002	2.54E-003	1.1903E-002
		312.00	36.00	2.5439E-003		1.1502E-003
		340.60	4.20	2.1430E-002		-5.3245E-003
		375.00	0.68	1.2325E-001		-4.6233E-002
		415.60	1.75	5.3388E-002		3.0879E-003
	Pu-239	129.28	0.01	5.4441E+001	5.30E+001	-1.1130E+001
		375.00	0.00	5.2966E+001		-1.9868E+001
		413.70	0.00	6.1634E+001		3.1122E+001
		451.50	0.00	4.7792E+002		7.3163E+001
+	AM-241	59.54*	35.70	1.6025E-001	1.60E-001	5.0498E-001
		125.28	0.00	8.9615E+001		-6.6153E+001
		335.40	0.00	1.8291E+002		1.2199E+001
		662.42*	0.00	1.1953E+002		2.2097E+003
		722.70	0.00	6.6910E+002		5.2726E+002
	PU-241	114.00	0.02	1.9660E+001	1.97E+001	-1.4561E+000
		332.60	0.00	3.0905E+001		4.2386E+000
	CM-243	209.70	3.27	3.3626E-002	6.86E-003	-1.4232E-002
		228.18	10.56	1.0135E-002		6.9669E-003
		277.60	14.00	6.8630E-003		2.3268E-003

+ = Nuclide identified during the nuclide identification
* = Energy line found in the spectrum
> = MDA value not calculated
@ = Half-life too short to be able to perform the decay correction

N U C L I D E T O T A L S

Nuclide	Mass (g)

C A N B E R R A I S O C S A N A L Y S I S

Report Generated On : 2/21/02 2:25:38 PM

Sample Title : 4817 Side B
Spectrum Description :
Sample Identification : 1204
Sample Size : 31.8 kg

Sample Taken On : 2/07/02 9:57:00 AM
Acquisition Started : 2/07/02 9:58:22 AM

Live Time: 1800.0 seconds Real Time: 1802.4 seconds

ISOCS Calabration : 4817
Energy Calibration Used Done On : 2/27/01
Efficiency Calibration Used Done On : 2/21/02

P E A K A N A L Y S I S R E P O R T

Peak No.	Peak centroid	Energy (keV)	Net Peak Area	Net Area Uncert.	Continuum Counts
1	239.37	59.93	2.94E+002	39.87	1.87E+003
2	340.60	85.23	7.18E+002	57.66	2.42E+003
3	349.75	87.51	1.74E+002	54.50	2.44E+003
4	2044.85	511.15	1.33E+002	15.00	8.01E+001
5	2437.01	609.16	7.31E+001	11.75	5.68E+001
6	2647.06	661.66	5.32E+002	24.68	4.76E+001
7	7063.60	1765.43	3.42E+001	7.07	1.90E+000

N U C L I D E I D E N T I F I C A T I O N R E P O R T

Nuclide Name	Id Confidence	Energy (keV)	Yield (%)	Activity (uCi)	Activity Uncertainty
CS-137	1.000	661.65*	85.12	8.07336E-003	4.52522E-004
AM-241	0.994	59.54*	35.70	2.28828E-001	3.59471E-002
		125.28	0.00		
		335.40	0.00		
		662.42* @	0.00	1.90890E+003	1.06872E+002
		722.70	0.00		

I N T E R F E R E N C E C O R R E C T E D R E P O R T

Nuclide Name	Nuclide Id Confidence	Wt mean Activity (uCi/kg)	Wt mean Activity Uncertainty
CS-137	1.000	8.072392E-003	4.519957E-004
AM-241 @	0.994	2.288283E-001	3.594714E-002

? = nuclide is part of an undetermined solution
X = nuclide rejected by the interference analysis
@ = nuclide contains energy lines not used in Weighted Mean Activity

Errors quoted at 1.000 sigma

****
***** N U C L I D E M D A R E P O R T *****
****

	Nuclide Name	Energy (keV)	Yield (%)	Line MDA (uCi/kg)	Nuclide MDA (uCi/kg)	Activity (uCi/kg)
	CO-60	1173.22	100.00	7.5365E-004	7.21E-004	-5.8898E-004
		1332.49	100.00	7.2098E-004		-9.5083E-004
	CS-134	475.35	1.46	6.3055E-002	9.02E-004	-2.3850E-002
		563.23	8.38	9.7614E-003		6.1248E-003
		569.32	15.43	5.2207E-003		2.7673E-003
		604.70	97.60	9.9768E-004		2.6408E-004
		795.84	85.40	9.0229E-004		4.2983E-004
		801.93	8.73	8.3119E-003		-3.5067E-003
		1038.57	1.00	7.1871E-002		-4.4778E-002
		1167.94	1.80	4.4241E-002		3.5727E-002
		1365.15	3.04	2.0991E-002		1.6109E-002
+	CS-137	661.65*	85.12	5.2799E-004	5.28E-004	8.0734E-003
	NP-237	300.17	6.20	1.5795E-002	2.62E-003	2.8175E-003
		312.00	36.00	2.6205E-003		1.3470E-003
		340.60	4.20	2.2583E-002		1.4809E-002
		375.00	0.68	1.2775E-001		1.3800E-001
		415.60	1.75	5.1494E-002		8.1045E-003
	Pu-239	129.28	0.01	5.4691E+001	5.47E+001	-2.5880E+001
		375.00	0.00	5.4901E+001		5.9305E+001
		413.70	0.00	5.8286E+001		3.5261E+001
		451.50	0.00	4.5817E+002		1.2106E+002
+	AM-241	59.54*	35.70	1.5876E-001	1.59E-001	2.2883E-001
		125.28	0.00	9.0749E+001		-3.0706E+001
		335.40	0.00	1.9248E+002		3.2956E+001
		662.42*	0.00	1.2484E+002		1.9089E+003
		722.70	0.00	5.9090E+002		5.0217E+002
	PU-241	114.00	0.02	1.9427E+001	1.94E+001	-3.5165E+000
		332.60	0.00	3.1845E+001		-1.4902E+001
	CM-243	209.70	3.27	3.4412E-002	6.69E-003	-2.6427E-002
		228.18	10.56	1.0307E-002		-2.0981E-004
		277.60	14.00	6.6868E-003		3.6818E-003

+ = Nuclide identified during the nuclide identification
* = Energy line found in the spectrum
> = MDA value not calculated
@ = Half-life too short to be able to perform the decay correction

N U C L I D E T O T A L S

Nuclide	Mass (g)

Bldg 233-S
NDA Item Description Sheet
Pipe Geometry

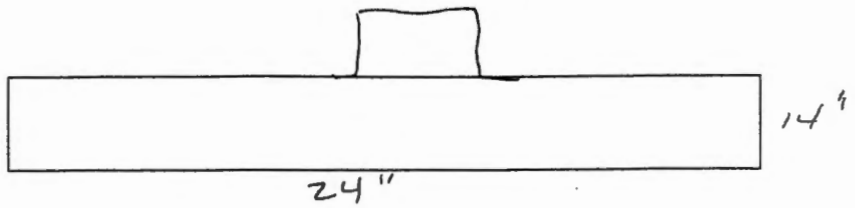

Put Dimensions on Pipe

Item ID: 4837

Weight (kg): 37.5 17.04 kg

Material Description: 14" SS DUCT

Packaging: 3 + LAYERS

Detector Distance (in): 24

Detector Filters: NONE

Dose Rate: <.5

Comments: 1. A 18900 SEL 1205
2 B 1800 1206

233-S Item Analysis

Spreadsheet Version 3.0b

1/14/02

Sample Info:

Item ID: 4837

File Name: 1206

Assay Date: 7-Feb-02

File Name:

Data Input:

Isotope	Activity (uCi/kg)	Meas Uncert
Pu-239 (129)	4.47E+01	
Pu-239 (414)		
Am-241	1.97E+00	1.66E-01
Np-237		
U-238		
U-235		
Cs-137	8.20E-03	4.31E-04
Co-60		

Activity (uCi/kg)	Meas Uncert

Item Parameters:

Contamination: Internal

Item Type: Pipe or Duct

Calcs: Use 1st

Dimensions:

Length (in): 24

Weight (lbs): 37.5

Width (in): 14

Depth for TMU (in): 4

Depth (in): 14

% Volume: 100

Am-241 Calcs:

Measured	1.97E+00	+/-	8.96E-01	Use Meas
Calculated	6.19E+01	+/-	3.90E+01	

Nuclide Activities:

Isotope	Activity (nCi/g)		Total Unc 1 sigma
Pu-238	1.81E+01	+/-	4.07E+00
Pu-239	4.47E+01	+/-	1.00E+01
Pu-240	2.33E+01	+/-	5.23E+00
Pu-241	8.70E+01	+/-	1.95E+01
Pu-242	2.35E-02	+/-	5.28E-03
Am-241	1.97E+00	+/-	8.96E-01
Np-237	0.00E+00	+/-	0.00E+00
U-238	0.00E+00	+/-	0.00E+00
U-235	0.00E+00	+/-	0.00E+00
Cs-137	8.20E-03	+/-	1.01E-03
Co-60	0.00E+00	+/-	0.00E+00

Results:

Total TRU Activity(nCi/g):	8.81E+01	+/-	1.21E+01	Calc from Pu-239 MDA
Pu (g): 1.42E-02	**Pu (g) + 3 sigma TMU:**		2.37E-02	
	Pu(g) + 3 sigma:		1.42E-02	

Comments:

Errors:

Analyst: Martin Winterrose

Date: 2/21/02

```
#Date & Time: Thu Feb 21 14:40:36 2002
~g=PIPE
~description=4837
~comment=14"_SS_DUCT
~Ccollimator=50MM-180D
~crpn=4
~Detector=7219
~Convergence in %=1          ~MDRPN=4
~Lunit=IN  ~Tunit=C  ~Dunit=G/CU.C    ~Punit=MM.HG
~at=20        ~ap=760       ~rh=50
~Energies kev=   50.000,  100.000,  128.000,  130.000,  150.000,  200.000,#
                300.000,  500.000,  700.000, 1000.000, 1400.000, 2000.000,#
               4000.000,
~Error in %=     10.000,   10.000,   10.000,   10.000,    8.000,#
                  8.000,    6.000,    6.000,    4.000,    4.000,    4.000,#
                  4.000,
~d1.1=0.125     ~d1.2=14        ~d1.3=12        ~d1.4=12        ~1mater=304SS    ~1den=7.81
~d2.1=0.125     ~d2.2=12        ~d2.3=12        ~2mater=DRYDIRT  ~2den=1.6       ~2con=1
~d3.1=13        ~d3.2=12        ~d3.3=12        ~3mater=DRYAIR   ~3den=0.00129
~sd1=24
```

C A N B E R R A I S O C S A N A L Y S I S

Report Generated On : 2/21/02 2:42:02 PM

Sample Title : 4837 Side B
Spectrum Description :
Sample Identification : 1206
Sample Size : 17.0 kg

Sample Taken On : 2/07/02 11:23:00 AM
Acquisition Started : 2/07/02 11:24:27 AM

Live Time: 1800.0 seconds Real Time: 1802.3 seconds

ISOCS Calabration : 4837
Energy Calibration Used Done On : 2/27/01
Efficiency Calibration Used Done On : 2/21/02

P E A K A N A L Y S I S R E P O R T

Peak No.	Peak centroid	Energy (keV)	Net Peak Area	Net Area Uncert.	Continuum Counts
1	239.26	59.90	2.86E+003	79.55	1.78E+003
2	340.01	85.08	6.90E+002	67.92	2.20E+003
3	352.20	88.13	1.52E+002	59.46	2.22E+003
4	413.24	103.38	1.25E+002	48.99	2.24E+003
5	422.03	105.58	1.46E+002	47.40	2.38E+003
6	2044.46	511.05	1.12E+002	16.33	6.80E+001
7	2437.28	609.23	1.04E+002	12.89	5.23E+001
8	2646.92	661.62	6.29E+002	26.52	4.17E+001
9	4483.71	1120.67	4.80E+001	8.94	1.80E+001
10	7064.62	1765.69	3.61E+001	7.13	5.73E-001

N U C L I D E I D E N T I F I C A T I O N R E P O R T

Nuclide Name	Id Confidence	Energy (keV)	Yield (%)	Activity (uCi)	Activity Uncertainty
CS-137	1.000	661.65*	85.12	8.19646E-003	4.31124E-004
AM-241	0.994	59.54*	35.70	1.96842E+000	1.65702E-001
		125.28	0.00		
		335.40	0.00		
		662.42* @	0.00	1.93801E+003	1.01802E+002
		722.70	0.00		

I N T E R F E R E N C E C O R R E C T E D R E P O R T

Nuclide Name	Nuclide Id Confidence	Wt mean Activity (uCi/kg)	Wt mean Activity Uncertainty
CS-137	1.000	8.188141E-003	4.305551E-004
AM-241 @	0.994	1.968421E+000	1.657018E-001

? = nuclide is part of an undetermined solution
X = nuclide rejected by the interference analysis
@ = nuclide contains energy lines not used in Weighted Mean Activity

Errors quoted at 1.000 sigma

****
***** N U C L I D E M D A R E P O R T *****
****

	Nuclide Name	Energy (keV)	Yield (%)	Line MDA (uCi/kg)	Nuclide MDA (uCi/kg)	Activity (uCi/kg)
	CO-60	1173.22	100.00	6.1338E-004	5.54E-004	-5.1543E-005
		1332.49	100.00	5.5413E-004		2.2285E-004
	CS-134	475.35	1.46	5.0594E-002	7.70E-004	-1.3965E-002
		563.23	8.38	7.9097E-003		-8.3052E-004
		569.32	15.43	4.3751E-003		3.1194E-004
		604.70	97.60	9.0782E-004		-4.7637E-004
		795.84	85.40	7.6995E-004		9.6728E-004
		801.93	8.73	7.2049E-003		-2.4697E-003
		1038.57	1.00	6.2913E-002		5.6394E-002
		1167.94	1.80	3.7034E-002		1.9731E-002
		1365.15	3.04	1.4800E-002		-1.1755E-002
+	CS-137	661.65*	85.12	4.2648E-004	4.26E-004	8.1965E-003
	NP-237	300.17	6.20	1.3079E-002	2.20E-003	-9.7642E-004
		312.00	36.00	2.1971E-003		1.2514E-003
		340.60	4.20	1.8918E-002		1.1665E-002
		375.00	0.68	1.0401E-001		-6.2450E-002
		415.60	1.75	4.4035E-002		-3.7816E-002
	Pu-239	129.28	0.01	4.4986E+001	4.47E+001	3.6363E+001
		375.00	0.00	4.4697E+001		-2.6838E+001
		413.70	0.00	5.1667E+001		3.1715E+001
		451.50	0.00	4.1964E+002		2.5051E+002
+	AM-241	59.54*	35.70	1.3684E-001	1.37E-001	1.9684E+000
		125.28	0.00	7.5035E+001		4.6016E+001
		335.40	0.00	1.5956E+002		9.1991E+001
		662.42*	0.00	1.0084E+002		1.9380E+003
		722.70	0.00	5.3812E+002		-1.1429E+002
	PU-241	114.00	0.02	1.5960E+001	1.60E+001	1.0939E+001
		332.60	0.00	2.6620E+001		9.3961E+000
	CM-243	209.70	3.27	2.8826E-002	5.73E-003	9.4224E-003
		228.18	10.56	8.1964E-003		-3.1079E-004
		277.60	14.00	5.7260E-003		-3.7448E-003

+ = Nuclide identified during the nuclide identification
* = Energy line found in the spectrum
> = MDA value not calculated
@ = Half-life too short to be able to perform the decay correction

N U C L I D E T O T A L S

Nuclide	Mass (g)

Bldg 233-S
NDA Item Description Sheet
Pipe Geometry

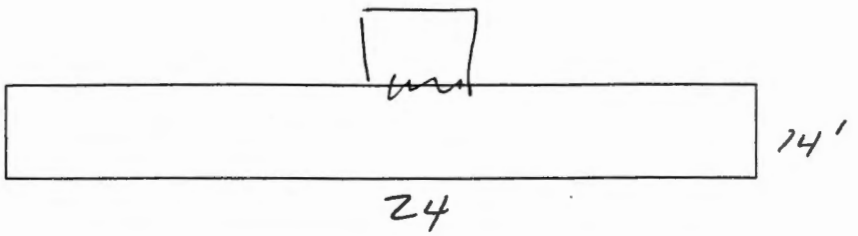

Put Dimensions on Pipe

Item ID: 4837 Replicate

Weight (kg): 37.5 17.24 kg

Material Description: 14" SS Duct

Packaging: 3+ Layers

Detector Distance (in): 24

Detector Filters: None

Dose Rate: <.5

Comments: 1A 900 1207
2B 1800 1208

233-S Item Analysis

Spreadsheet Version 3.0b 01/14/2002

Sample Info:

Item ID:	4837 Replicate	**Assay Date:**	21-Feb-02
File Name:	1208	**File Name:**	

Data Input:

Isotope	Activity (uCi/kg)	Meas Uncert	Activity (uCi/kg)	Meas Uncert
Pu-239 (129)	4.55E+01			
Pu-239 (414)				
Am-241	2.36E+00	1.94E-01		
Np-237				
U-238				
U-235				
Cs-137	9.24E-03	4.66E-04		
Co-60				

Item Parameters:

Contamination: Internal Item Type: Pipe or Duct Calcs: Use 1st

Dimensions:

Length (in):	24	Width (in):	14	Depth (in):	14
Weight (lbs):	37.5	Depth for TMU (in):	4	% Volume:	100

Am-241 Calcs:

Measured	2.36E+00	+/-	1.07E+00	Use Meas
Calculated	6.30E+01	+/-	3.97E+01	

Nuclide Activities:

Isotope	Activity (nCi/g)		Total Unc 1 sigma
Pu-238	1.84E+01	+/-	4.14E+00
Pu-239	4.55E+01	+/-	1.02E+01
Pu-240	2.37E+01	+/-	5.32E+00
Pu-241	8.86E+01	+/-	1.99E+01
Pu-242	2.39E-02	+/-	5.38E-03
Am-241	2.36E+00	+/-	1.07E+00
Np-237	0.00E+00	+/-	0.00E+00
U-238	0.00E+00	+/-	0.00E+00
U-235	0.00E+00	+/-	0.00E+00
Cs-137	9.24E-03	+/-	1.13E-03
Co-60	0.00E+00	+/-	0.00E+00

Results:

Total TRU Activity(nCi/g):	9.00E+01	+/-	1.23E+01	Calc from Pu-239 MDA
Pu (g):	1.44E-02	**Pu (g) + 3 sigma TMU:**	2.42E-02	
		Pu(g) + 3 sigma:	1.44E-02	

Comments:

Pu-239 MDA used for Characterization

Errors:

Analyst: Martin Winterrose **Date:** 02/25/2002

```
#Date & Time: Thu Feb 21 14:40:36 2002
~g=PIPE
~description=4837
~comment=14"_SS_DUCT
~Ccollimator=50MM-180D
~crpn=4
~Detector=7219
~Convergence in %=1          ~MDRPN=4
~Lunit=IN  ~Tunit=C  ~Dunit=G/CU.C    ~Punit=MM.HG
~at=20        ~ap=760       ~rh=50
~Energies kev=   50.000,  100.000,  128.000,  130.000,  150.000,  200.000,#
                300.000,  500.000,  700.000, 1000.000, 1400.000, 2000.000,#
               4000.000,
~Error in %=     10.000,   10.000,   10.000,   10.000,   10.000,    8.000,#
                  8.000,    6.000,    6.000,    4.000,    4.000,    4.000,#
                  4.000,
~d1.1=0.125     ~d1.2=14        ~d1.3=12        ~d1.4=12        ~1mater=304SS    ~1den=7.81
~d2.1=0.125     ~d2.2=12        ~d2.3=12        ~2mater=DRYDIRT  ~2den=1.6       ~2con=1
~d3.1=13        ~d3.2=12        ~d3.3=12        ~3mater=DRYAIR   ~3den=0.00129
~sd1=24
```

C A N B E R R A I S O C S A N A L Y S I S

Report Generated On : 2/21/02 2:43:50 PM

Sample Title : 4837 Side B Replicate
Spectrum Description :
Sample Identification : 1208
Sample Size : 17.0 kg

Sample Taken On : 2/07/02 12:20:00 PM
Acquisition Started : 2/07/02 12:21:10 PM

Live Time: 1800.0 seconds Real Time: 1802.4 seconds

ISOCS Calabration : 4837
Energy Calibration Used Done On : 2/27/01
Efficiency Calibration Used Done On : 2/21/02

P E A K A N A L Y S I S R E P O R T

Peak No.	Peak centroid	Energy (keV)	Net Peak Area	Net Area Uncert.	Continuum Counts
1	239.26	59.90	3.43E+003	74.42	1.90E+003
2	340.34	85.16	6.43E+002	54.81	2.31E+003
3	350.47	87.69	2.47E+002	52.70	2.33E+003
4	2045.21	511.24	1.19E+002	14.84	8.27E+001
5	2437.83	609.36	1.33E+002	13.78	5.17E+001
6	2646.86	661.60	7.09E+002	27.98	4.41E+001
7	3644.60	910.96	4.90E+001	9.25	2.68E+001
8	4483.06	1120.50	5.14E+001	8.96	1.46E+001
9	7061.35	1764.87	3.55E+001	7.15	1.75E+000

N U C L I D E I D E N T I F I C A T I O N R E P O R T

Nuclide Name	Id Confidence	Energy (keV)	Yield (%)	Activity (uCi)	Activity Uncertainty
CS-137	1.000	661.65*	85.12	9.23751E-003	4.66237E-004
AM-241	0.994	59.54*	35.70	2.35603E+000	1.94078E-001
		125.28	0.00		
		335.40	0.00		
		662.42* @	0.00	2.18416E+003	1.10081E+002
		722.70	0.00		

I N T E R F E R E N C E C O R R E C T E D R E P O R T

Nuclide Name	Nuclide Id Confidence	Wt mean Activity (uCi/kg)	Wt mean Activity Uncertainty
CS-137	1.000	9.227542E-003	4.655691E-004
AM-241 @	0.994	2.356034E+000	1.940776E-001

? = nuclide is part of an undetermined solution
X = nuclide rejected by the interference analysis
@ = nuclide contains energy lines not used in Weighted Mean Activity

Errors quoted at 1.000 sigma

****
***** N U C L I D E M D A R E P O R T *****
****

	Nuclide Name	Energy (keV)	Yield (%)	Line MDA (uCi/kg)	Nuclide MDA (uCi/kg)	Activity (uCi/kg)
	CO-60	1173.22	100.00	7.0561E-004	6.28E-004	1.2690E-004
		1332.49	100.00	6.2773E-004		-1.1215E-004
	CS-134	475.35	1.46	5.4433E-002	7.13E-004	-5.5366E-002
		563.23	8.38	8.2085E-003		-5.4052E-004
		569.32	15.43	4.4678E-003		-2.0371E-003
		604.70	97.60	9.0929E-004		1.6445E-005
		795.84	85.40	7.1251E-004		-5.4169E-004
		801.93	8.73	7.2049E-003		-6.2131E-003
		1038.57	1.00	6.7050E-002		9.0651E-003
		1167.94	1.80	4.0717E-002		7.6935E-003
		1365.15	3.04	1.5810E-002		4.3787E-003
+	CS-137	661.65*	85.12	4.3772E-004	4.38E-004	9.2375E-003
	NP-237	300.17	6.20	1.3742E-002	2.20E-003	1.0037E-002
		312.00	36.00	2.1971E-003		-3.1138E-004
		340.60	4.20	1.9941E-002		9.7637E-003
		375.00	0.68	1.1264E-001		-2.9547E-002
		415.60	1.75	4.7790E-002		-2.4308E-002
	Pu-239	129.28	0.01	4.5511E+001	4.55E+001	-9.4740E+000
		375.00	0.00	4.8405E+001		-1.2698E+001
		413.70	0.00	5.6267E+001		1.4221E+001
		451.50	0.00	4.1246E+002		2.4665E+002
+	AM-241	59.54*	35.70	1.4124E-001	1.41E-001	2.3560E+000
		125.28	0.00	7.6122E+001		4.9867E+001
		335.40	0.00	1.6556E+002		-6.1836E+000
		662.42*	0.00	1.0350E+002		2.1842E+003
		722.70	0.00	5.5753E+002		4.8058E+002
	PU-241	114.00	0.02	1.6315E+001	1.63E+001	-4.5489E+000
		332.60	0.00	2.7300E+001		-2.8619E+001
	CM-243	209.70	3.27	3.0027E-002	6.02E-003	3.6067E-003
		228.18	10.56	8.9251E-003		1.2396E-002
		277.60	14.00	6.0196E-003		1.9074E-003

+ = Nuclide identified during the nuclide identification
* = Energy line found in the spectrum
> = MDA value not calculated
@ = Half-life too short to be able to perform the decay correction

N U C L I D E T O T A L S

Nuclide	Mass (g)

Bldg 233-S
NDA Item Description Sheet
Bottle or Cylinder Geometry

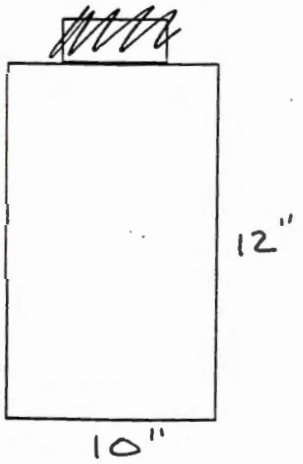

Put Dimensions on Bottle

Item ID: 47566

Weight (kg): 110 LBS 50 kg

Material Description: CONCRETE CORE

Packaging: 3 LAYERS

Detector Distance (in): 24

Detector Filters: NONE

Dose Rate: <.5

Comments: 1 A 900 GRL 1209
2 B 1800 S 1210

233-S Item Analysis

Spreadsheet Version 3.0b

1/14/02

Sample Info:

Item ID:	4756	**Assay Date:**	7-Feb-02
File Name:	1210	**File Name:**	

Data Input:

Isotope	Activity (uCi/kg)	Meas Uncert	Activity (uCi/kg)	Meas Uncert
Pu-239 (129)	1.90E+01			
Pu-239 (414)				
Am-241	5.35E-01	4.53E-02		
Np-237				
U-238				
U-235				
Cs-137	2.21E-04	5.24E-05		
Co-60				

Item Parameters:

Contamination:	Surface only	Item Type:	Bag	Calcs:	Use 1st

Dimensions:

Length (in):	10	Width (in):	12	Depth (in):	12
Weight (lbs):	110	Depth for TMU (in):	4	% Volume:	100

Am-241 Calcs:

Measured	5.35E-01	+/-	1.41E-01	Use Meas
Calculated	2.63E+01	+/-	1.26E+01	

Nuclide Activities:

Isotope	Activity (nCi/g)		Total Unc 1 sigma
Pu-238	7.70E+00	+/-	1.17E+00
Pu-239	1.90E+01	+/-	2.88E+00
Pu-240	9.90E+00	+/-	1.50E+00
Pu-241	3.70E+01	+/-	5.60E+00
Pu-242	1.00E-02	+/-	1.51E-03
Am-241	5.35E-01	+/-	1.41E-01
Np-237	0.00E+00	+/-	0.00E+00
U-238	0.00E+00	+/-	0.00E+00
U-235	0.00E+00	+/-	0.00E+00
Cs-137	2.21E-04	+/-	5.68E-05
Co-60	0.00E+00	+/-	0.00E+00

Results:

Total TRU Activity(nCi/g):	3.71E+01	+/-	3.45E+00	Calc from Pu-239 MDA
Pu (g):	1.77E-02	**Pu (g) + 3 sigma TMU:**	2.57E-02	
		Pu(g) + 3 sigma:	1.77E-02	

Comments:

Error due to material weight.

Errors:Density > 1,

Analyst: Martin Winterrose

Date: 2/22/02

```
#Date & Time: Fri Feb 22 09:18:13 2002
~g=PIPE
~description=4756_CORE
~comment=CONCRETE
~Ccollimator=50MM-180D
~crpn=4
~Detector=7219
~Convergence in %=1            ~MDRPN=4
~Lunit=IN  ~Tunit=C  ~Dunit=G/CU.C    ~Punit=MM.HG
~at=20        ~ap=760       ~rh=50
~Energies kev=   50.000,  100.000,  128.000,  130.000,  150.000,  200.000,#
                300.000,  500.000,  700.000, 1000.000, 1400.000, 2000.000,#
               4000.000,
~Error in %=     10.000,   10.000,   10.000,   10.000,   10.000,    8.000,#
                  8.000,    6.000,    6.000,    4.000,    4.000,    4.000,#
                  4.000,
~d1.1=0.109     ~d1.2=10        ~d1.3=6         ~d1.4=6         ~1mater=304SS
~d2.1=0.154     ~d2.2=6         ~d2.3=6         ~2mater=DRYDIRT  ~2den=1.6
~d3.1=9         ~d3.2=6         ~d3.3=6         ~3mater=CONCRETE ~3den=2.3
~sd1=24
```

C A N B E R R A I S O C S A N A L Y S I S

Report Generated On : 2/22/02 9:31:08 AM

Sample Title : 4756 Side B
Spectrum Description :
Sample Identification : 1210
Sample Size : 50.0 kg

Sample Taken On : 2/07/02 1:21:00 PM
Acquisition Started : 2/07/02 1:23:26 PM

Live Time: 1800.0 seconds Real Time: 1802.4 seconds

ISOCS Calabration : 4756 CORE
Energy Calibration Used Done On : 2/27/01
Efficiency Calibration Used Done On : 2/22/02

P E A K A N A L Y S I S R E P O R T

Peak No.	Peak centroid	Energy (keV)	Net Peak Area	Net Area Uncert.	Continuum Counts
1	199.25	49.90	1.33E+002	37.99	1.56E+003
2	239.09	59.86	2.67E+003	79.43	1.93E+003
3	339.94	85.06	7.63E+002	57.18	2.37E+003
4	350.24	87.64	1.75E+002	55.18	2.39E+003
5	372.51	93.20	1.74E+002	48.89	2.41E+003
6	380.45	95.19	1.37E+002	48.36	2.41E+003
7	1408.26	352.06	1.00E+002	15.01	1.22E+002
8	2044.22	510.99	1.49E+002	15.08	7.52E+001
9	2332.95	583.15	7.97E+001	11.57	5.32E+001
10	2437.51	609.28	1.61E+002	15.37	4.81E+001
11	2647.01	661.64	4.14E+001	9.75	4.62E+001
12	3644.90	911.03	6.36E+001	9.95	2.94E+001
13	4482.73	1120.42	5.94E+001	10.01	2.89E+001
14	5846.11	1461.16	5.25E+002	23.60	6.58E+000
15	7063.26	1765.34	4.98E+001	8.10	2.67E+000

N U C L I D E I D E N T I F I C A T I O N R E P O R T

Nuclide Name	Id Confidence	Energy (keV)	Yield (%)	Activity (uCi)	Activity Uncertainty
CS-137	1.000	661.65*	85.12	2.20573E-004	5.23948E-005
AM-241	0.995	59.54*	35.70	5.34518E-001	4.53483E-002
		125.28	0.00		
		335.40	0.00		
		662.42* @	0.00	5.21534E+001	1.23876E+001
		722.70	0.00		

I N T E R F E R E N C E C O R R E C T E D R E P O R T

Nuclide Name	Nuclide Id Confidence	Wt mean Activity (uCi/kg)	Wt mean Activity Uncertainty
CS-137	1.000	2.183128E-004	5.239172E-005
AM-241 @	0.995	5.345178E-001	4.534834E-002

? = nuclide is part of an undetermined solution
X = nuclide rejected by the interference analysis
@ = nuclide contains energy lines not used in Weighted Mean Activity

Errors quoted at 1.000 sigma

****
***** N U C L I D E M D A R E P O R T *****
****

	Nuclide Name	Energy (keV)	Yield (%)	Line MDA (uCi/kg)	Nuclide MDA (uCi/kg)	Activity (uCi/kg)
	CO-60	1173.22	100.00	2.8981E-004	2.55E-004	6.3068E-005
		1332.49	100.00	2.5523E-004		-3.8315E-005
	CS-134	475.35	1.46	2.0171E-002	3.30E-004	-7.4253E-003
		563.23	8.38	3.4738E-003		4.0117E-004
		569.32	15.43	1.8727E-003		-2.3346E-004
		604.70	97.60	3.9778E-004		-1.5545E-004
		795.84	85.40	3.2994E-004		2.1707E-004
		801.93	8.73	3.1925E-003		-1.3002E-003
		1038.57	1.00	2.7664E-002		-1.3135E-003
		1167.94	1.80	1.5922E-002		1.0319E-002
		1365.15	3.04	7.4077E-003		-1.6207E-004
+	CS-137	661.65*	85.12	1.8283E-004	1.83E-004	2.2057E-004
	NP-237	300.17	6.20	5.3753E-003	8.73E-004	-1.3515E-004
		312.00	36.00	8.7345E-004		8.0201E-005
		340.60	4.20	7.7730E-003		1.2790E-003
		375.00	0.68	4.4694E-002		-1.4189E-002
		415.60	1.75	1.8060E-002		-6.5031E-003
	Pu-239	129.28	0.01	1.8994E+001	1.90E+001	-4.6138E+000
		375.00	0.00	1.9207E+001		-6.0979E+000
		413.70	0.00	2.1387E+001		1.0871E+001
		451.50	0.00	1.5599E+002		9.3557E+001
+	AM-241	59.54*	35.70	4.1395E-002	4.14E-002	5.3452E-001
		125.28	0.00	3.1561E+001		1.4248E+001
		335.40	0.00	6.5135E+001		1.8981E+001
		662.42*	0.00	4.3228E+001		5.2153E+001
		722.70	0.00	2.3525E+002		2.1377E+002
	PU-241	114.00	0.02	6.6785E+000	6.68E+000	-4.3289E+000
		332.60	0.00	1.1139E+001		-8.0153E+000
	CM-243	209.70	3.27	1.2739E-002	2.52E-003	1.1329E-002
		228.18	10.56	3.6839E-003		3.2934E-003
		277.60	14.00	2.5194E-003		-3.3943E-004

+ = Nuclide identified during the nuclide identification
* = Energy line found in the spectrum
> = MDA value not calculated
@ = Half-life too short to be able to perform the decay correction

N U C L I D E T O T A L S

Nuclide	Mass (g)

Bldg 233s
NDA Item Description Sheet
Box Geometry

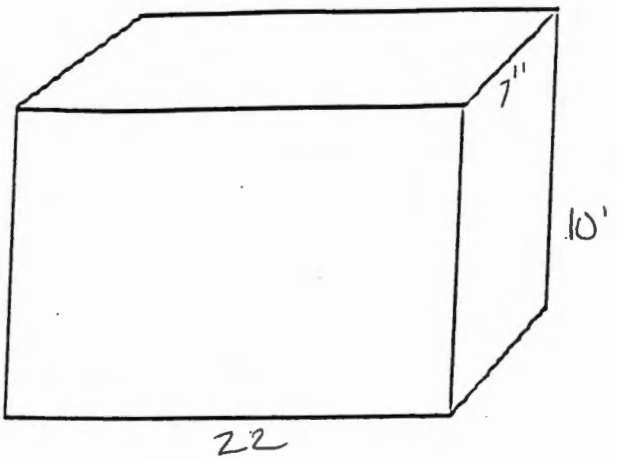

Put Dimensions on Box

1.621056

Item ID: 1757

Weight (kg): 90 LBS 40.9 kg

Material Description: FLOW METER

Packaging: 3 + LAYERS

Detector Distance (in): 24

Detector Filters: NONE

Dose Rate: <.5

Comments:

233-S Item Analysis

Spreadsheet Version 3.0b

1/14/02

Sample Info:

Item ID: 1757

File Name: 1212

Assay Date: 7-Feb-02

File Name:

Data Input:

Isotope	Activity (uCi/kg)	Meas Uncert	Activity (uCi/kg)	Meas Uncert
Pu-239 (129)	1.47E+01	4.43E+00		
Pu-239 (414)				
Am-241	5.88E+00	4.95E-01		
Np-237				
U-238				
U-235				
Cs-137	3.95E-04	6.95E-05		
Co-60				

Item Parameters:

Contamination: Internal

Item Type: Box

Calcs: Use 1st

Dimensions:

Length (in): 22

Width (in): 10

Depth (in): 7

Weight (lbs): 90

Depth for TMU (in): 4

% Volume: 100

Am-241 Calcs:

Measured	5.88E+00	+/-	2.40E+00	Use Meas
Calculated	2.03E+01	+/-	1.92E+01	

Nuclide Activities:

Isotope	Activity (nCi/g)		Total Unc 1 sigma
Pu-238	5.95E+00	+/-	2.16E+00
Pu-239	1.47E+01	+/-	5.32E+00
Pu-240	7.64E+00	+/-	2.77E+00
Pu-241	2.86E+01	+/-	1.04E+01
Pu-242	7.72E-03	+/-	2.80E-03
Am-241	5.88E+00	+/-	2.40E+00
Np-237	0.00E+00	+/-	0.00E+00
U-238	0.00E+00	+/-	0.00E+00
U-235	0.00E+00	+/-	0.00E+00
Cs-137	3.95E-04	+/-	7.99E-05
Co-60	0.00E+00	+/-	0.00E+00

Results:

Total TRU Activity(nCi/g):	3.41E+01	+/-	6.81E+00	Calc from Pu-239 Act
Pu (g): 1.12E-02	**Pu (g) + 3 sigma TMU:**		2.33E-02	
	Pu(g) + 3 sigma:		2.13E-02	

Comments:

Error due to material weight.

Errors:Density > 1,

Analyst: Martin Winterrose

Date: 2/21/02

```
#Date & Time: Fri Feb 22 09:45:31 2002
~g=SIMPLE_BOX
~description=1757
~comment=FLOWMETER
~Ccollimator=50MM-180D
~crpn=4
~Detector=7219
~Convergence in %=1            ~MDRPN=4
~Lunit=IN  ~Tunit=C  ~Dunit=G/CU.C    ~Punit=MM.HG
~at=20        ~ap=760       ~rh=50
~Energies kev=   50.000,  100.000,  128.000,  130.000,  150.000,  200.000,#
                300.000,  500.000,  700.000, 1000.000, 1400.000, 2000.000,#
               4000.000,
~Error in %=     10.000,   10.000,   10.000,   10.000,   10.000,    8.000,#
                  8.000,    6.000,    6.000,    4.000,    4.000,    4.000,#
                  4.000,
~d1.1=0.0132    ~d1.2=22        ~d1.3=10        ~d1.4=7         ~1mater=LPOLYET
~d3.1=9.95      ~3mater=304SS    ~3den=1.621     ~3con=1
~sd1=24
```

C A N B E R R A I S O C S A N A L Y S I S

Report Generated On : 2/22/02 10:47:23 AM

Sample Title : 1757 Side B
Spectrum Description :
Sample Identification : 1212
Sample Size : 40.9 kg

Sample Taken On : 2/07/02 3:03:00 PM
Acquisition Started : 2/07/02 3:04:11 PM

Live Time: 1800.0 seconds Real Time: 1804.2 seconds

ISOCS Calabration : 1757
Energy Calibration Used Done On : 2/27/01
Efficiency Calibration Used Done On : 2/22/02

P E A K A N A L Y S I S R E P O R T

Peak No.	Peak centroid	Energy (keV)	Net Peak Area	Net Area Uncert.	Continuum Counts
1	195.64	49.00	1.95E+002	70.20	2.99E+003
2	239.22	59.89	6.14E+004	1694.52	2.27E+003
3	340.16	85.12	7.16E+002	62.19	2.32E+003
4	350.34	87.66	1.84E+002	49.21	2.34E+003
5	397.20	99.37	1.99E+002	46.65	2.33E+003
6	518.18	129.61	1.71E+002	42.66	2.05E+003
7	2043.43	510.80	1.39E+002	16.74	5.28E+001
8	2332.94	583.15	6.50E+001	11.18	4.98E+001
9	2437.90	609.38	1.17E+002	13.24	4.81E+001
10	2646.37	661.48	6.09E+001	10.53	4.08E+001
11	7064.21	1765.58	3.96E+001	7.64	1.79E+000

N U C L I D E I D E N T I F I C A T I O N R E P O R T

Nuclide Name	Id Confidence	Energy (keV)		Yield (%)	Activity (uCi)	Activity Uncertainty
CS-137	0.999	661.65*		85.12	3.95242E-004	6.94615E-005
Pu-239	0.413	129.28*		0.01	1.47213E+001	4.42794E+000
		375.00		0.00		
		413.70		0.00		
		451.50	@	0.00		
AM-241	0.995	59.54*		35.70	5.88417E+000	4.94981E-001
		125.28		0.00		
		335.40		0.00		
		662.42*	@	0.00	9.34527E+001	1.64218E+001
		722.70		0.00		

I N T E R F E R E N C E C O R R E C T E D R E P O R T

Nuclide Name		Nuclide Id Confidence	Wt mean Activity (uCi/kg)	Wt mean Activity Uncertainty
CS-137		0.999	3.703555E-004	6.948482E-005
Pu-239	@	0.413	1.472130E+001	4.427938E+000
AM-241	@	0.995	5.884174E+000	4.949808E-001

? = nuclide is part of an undetermined solution
X = nuclide rejected by the interference analysis
@ = nuclide contains energy lines not used in Weighted Mean Activity

Errors quoted at 1.000 sigma

****
***** N U C L I D E M D A R E P O R T *****
****

	Nuclide Name	Energy (keV)	Yield (%)	Line MDA (uCi/kg)	Nuclide MDA (uCi/kg)	Activity (uCi/kg)
	CO-60	1173.22	100.00	3.3264E-004	2.77E-004	3.0818E-004
		1332.49	100.00	2.7736E-004		-5.7683E-005
	CS-134	475.35	1.46	2.5347E-002	3.86E-004	1.0525E-002
		563.23	8.38	3.8696E-003		5.2191E-004
		569.32	15.43	2.1045E-003		-1.1707E-003
		604.70	97.60	4.3424E-004		-1.3096E-004
		795.84	85.40	3.8567E-004		2.6869E-004
		801.93	8.73	3.5820E-003		-3.3515E-003
		1038.57	1.00	3.0530E-002		2.9799E-003
		1167.94	1.80	1.8538E-002		3.5277E-003
		1365.15	3.04	7.4604E-003		-4.4563E-003
+	CS-137	661.65*	85.12	2.1040E-004	2.10E-004	3.9524E-004
	NP-237	300.17	6.20	7.0692E-003	1.14E-003	-7.2410E-003
		312.00	36.00	1.1437E-003		-4.9133E-004
		340.60	4.20	9.6785E-003		4.5299E-003
		375.00	0.68	5.4252E-002		-1.3866E-002
		415.60	1.75	2.1531E-002		2.2869E-003
+	Pu-239	129.28*	0.01	1.8376E+001	1.84E+001	1.4721E+001
		375.00	0.00	2.3315E+001		-5.9587E+000
		413.70	0.00	2.5340E+001		6.7207E+000
		451.50	0.00	1.9533E+002		2.1502E+002
+	AM-241	59.54*	35.70	2.1492E-002	2.15E-002	5.8842E+000
		125.28	0.00	5.0701E+001		1.6613E+001
		335.40	0.00	8.5205E+001		5.6931E+001
		662.42*	0.00	4.9747E+001		9.3453E+001
		722.70	0.00	2.6114E+002		-1.2420E+000
	PU-241	114.00	0.02	1.0662E+001	1.07E+001	3.9047E+000
		332.60	0.00	1.4330E+001		-4.5639E+000
	CM-243	209.70	3.27	1.8747E-002	3.25E-003	1.3196E-002
		228.18	10.56	4.9208E-003		-3.1124E-003
		277.60	14.00	3.2459E-003		8.9245E-004

+ = Nuclide identified during the nuclide identification
* = Energy line found in the spectrum
> = MDA value not calculated
@ = Half-life too short to be able to perform the decay correction

N U C L I D E T O T A L S

Nuclide	Mass (g)
Pu-239	9.71E-003 +/- 2.92E-003

Bldg 233-S
NDA Item Description Sheet
~~Pipe~~ Geometry

RECTANGULAR PLANE

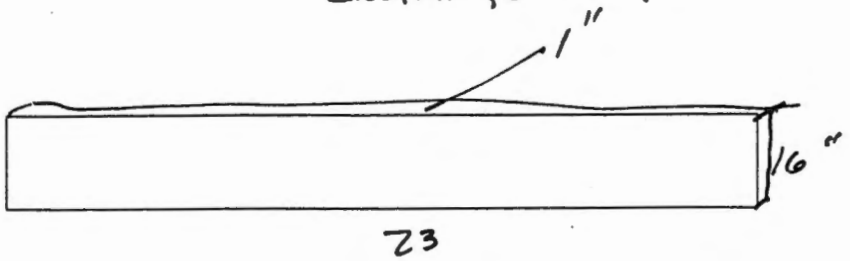

Put Dimensions on Pipe

Item ID: 1728

Weight (kg): 22 LBS

Material Description: PANEL -

Packaging: 3 + PADDING

Detector Distance (in): 24"

Detector Filters: NONE

Dose Rate: <.5

Comments: 14 1 900 - 1220
3 2 1900 1221

233-S Item Analysis

Spreadsheet Version 3.0b

1/14/02

Sample Info:

Item ID: 1728

File Name: 1221

Assay Date: 13-Feb-02

File Name:

Data Input:

Isotope	Activity (uCi/kg)	Meas Uncert	Activity (uCi/kg)	Meas Uncert
Pu-239 (129)				
Pu-239 (414)	1.41E+02	1.56E+01		
Am-241	1.50E+01	1.27E+00		
Np-237	3.76E-03	4.24E-04		
U-238				
U-235				
Cs-137	1.22E-03	3.91E-04		
Co-60				

Item Parameters:

Contamination: Surface only

Item Type: Box

Calcs: Use 1st

Dimensions:

Length (in): 23

Width (in): 16

Depth (in): 1

Weight (lbs): 22

Depth for TMU (in): 4

% Volume: 100

Am-241 Calcs:

Measured	1.50E+01	+/-	3.97E+00	Use Meas
Calculated	1.95E+02	+/-	9.34E+01	

Nuclide Activities:

Isotope	Activity (nCi/g)		Total Unc 1 sigma
Pu-238	5.72E+01	+/-	8.61E+00
Pu-239	1.41E+02	+/-	2.13E+01
Pu-240	7.35E+01	+/-	1.11E+01
Pu-241	2.75E+02	+/-	4.14E+01
Pu-242	7.43E-02	+/-	1.12E-02
Am-241	1.50E+01	+/-	3.97E+00
Np-237	3.76E-03	+/-	5.66E-04
U-238	0.00E+00	+/-	0.00E+00
U-235	0.00E+00	+/-	0.00E+00
Cs-137	1.22E-03	+/-	4.10E-04
Co-60	0.00E+00	+/-	0.00E+00

Results:

Total TRU Activity(nCi/g):		2.87E+02	+/-	2.58E+01	Calc from Pu-239 Act
Pu (g):	2.63E-02	**Pu (g) + 3 sigma TMU:**		3.81E-02	
		Pu(g) + 3 sigma:		3.50E-02	

Comments:

Density error due to geometry.

Errors:Density > 1,

Analyst: Martin Winterrose

Date: 2/22/02

```
#Date & Time: Wed Feb 13 14:41:35 2002
~g=RECTANGULAR_PLANE
~description=1728
~comment=1/2"_PLATE
~Ccollimator=50MM-180D
~crpn=4
~Detector=7219
~Convergence in %=1          ~MDRPN=4
~Lunit=IN  ~Tunit=C  ~Dunit=G/CU.C    ~Punit=MM.HG
~at=20        ~ap=760       ~rh=50
~Energies kev=   50.000,  100.000,  128.000,  130.000,  150.000,  200.000,#
                300.000,  500.000,  700.000, 1000.000, 1400.000, 2000.000,#
               4000.000,
~Error in %=     10.000,   10.000,   10.000,   10.000,   10.000,    8.000,#
                  8.000,    6.000,    6.000,    4.000,    4.000,    4.000,#
                  4.000,
~d1.1=0.024     ~d1.2=23        ~d1.3=16        ~1mater=POLYPROP ~1den=0.91
~d2.1=0.024     ~2mater=POLYPROP ~2den=0.91
~d3.1=0.25      ~3mater=CELLULOS ~3den=0.45
~d4.1=0.024     ~4mater=DRYDIRT  ~4den=1.6       ~4con=0.5
~d5.1=0.5       ~5mater=304SS    ~5den=7.81
~d6.1=0.024     ~6mater=DRYDIRT  ~6den=1.6       ~6con=0.5
~d7.1=0.25      ~7mater=CELLULOS ~7den=0.45
~sd1=24
```

C A N B E R R A I S O C S A N A L Y S I S

Report Generated On : 2/13/02 3:19:06 PM

Sample Title : 1728 Side B
Spectrum Description :
Sample Identification : 1221
Sample Size : 10.0 kg

Sample Taken On : 2/13/02 3:03:00 PM
Acquisition Started : 2/13/02 3:03:49 PM

Live Time: 1800.0 seconds Real Time: 1818.3 seconds

ISOCS Calabration : 1728
Energy Calibration Used Done On : 2/27/01
Efficiency Calibration Used Done On : 2/13/02

P E A K A N A L Y S I S R E P O R T

Peak No.	Peak centroid	Energy (keV)	Net Peak Area	Net Area Uncert.	Continuum Counts
1	239.26	59.90	5.10E+005	14971.7	5.93E+003
2	340.18	85.12	9.21E+002	62.64	3.03E+003
3	350.31	87.65	2.24E+002	57.66	3.03E+003
4	395.87	99.04	1.95E+003	89.67	2.94E+003
5	414.18	103.61	8.05E+002	71.56	2.88E+003
6	446.40	111.67	3.86E+002	54.87	2.94E+003
7	459.10	114.84	1.79E+002	51.96	2.87E+003
8	501.97	125.56	2.22E+002	48.89	2.58E+003
9	518.78	129.76	1.37E+003	59.12	2.46E+003
10	833.87	208.50	2.05E+002	22.48	3.64E+002
11	1202.09	300.53	4.53E+001	14.02	1.59E+002
12	1248.79	312.20	1.74E+002	17.76	1.39E+002
13	1333.09	333.27	8.55E+001	15.39	1.36E+002
14	1380.63	345.15	1.16E+002	15.87	1.24E+002
15	1501.11	375.26	2.80E+002	19.69	1.02E+002
16	1656.13	414.00	2.36E+002	18.59	9.32E+001
17	1806.76	451.65	4.74E+001	11.09	6.59E+001
18	2045.64	511.35	1.26E+002	16.58	5.11E+001
19	2436.95	609.14	6.83E+001	10.98	4.63E+001
20	2645.83	661.35	8.82E+001	28.08	4.10E+001
21	2648.95	662.13	7.72E+001	28.42	4.12E+001
22	7065.42	1765.89	4.66E+001	7.84	5.95E-001

NUCLIDE IDENTIFICATION REPORT

Nuclide Name	Id Confidence	Energy (keV)	Yield (%)	Activity (uCi)	Activity Uncertainty
CS-137	0.996	661.65*	85.12	1.22351E-003	3.91418E-004
NP-237	0.859	300.17*	6.20	5.58196E-003	1.74737E-003
		312.00*	36.00	3.75865E-003	4.23699E-004
		340.60	4.20		
		375.00*	0.68	3.52512E-001	2.92748E-002
		415.60*	1.75	1.22146E-001	1.08612E-002
Pu-239	0.993	129.28*	0.01	1.38004E+002	2.39217E+001
		375.00*	0.00	1.51491E+002	1.58163E+001
		413.70*	0.00	1.41155E+002	1.56499E+001
		451.50* @	0.00	2.37610E+002	5.64053E+001
AM-241	0.995	59.54*	35.70	1.50290E+001	1.27301E+000
		125.28*	0.00	3.47835E+001	7.84018E+000
		335.40	0.00		
		662.42* @	0.00	2.53371E+002	9.36101E+001
		722.70	0.00		
PU-241	0.973	114.00*	0.02	4.92813E+000	1.45746E+000
		332.60*	0.00	2.37615E+001	4.41804E+000

INTERFERENCE CORRECTED REPORT

Nuclide Name	Nuclide Id Confidence	Wt mean Activity (uCi/kg)	Wt mean Activity Uncertainty
CS-137	0.996	1.223506E-003	3.914180E-004
NP-237	0.859	3.859315E-003	4.115677E-004
Pu-239 @	0.993	1.405906E+002	6.241224E+000
AM-241 @	0.995	1.553642E+001	1.256553E+000
PU-241	0.973	6.776540E+000	1.384091E+000

? = nuclide is part of an undetermined solution
X = nuclide rejected by the interference analysis
@ = nuclide contains energy lines not used in Weighted Mean Activity

Errors quoted at 1.000 sigma

****
***** N U C L I D E M D A R E P O R T *****
****

	Nuclide Name	Energy (keV)	Yield (%)	Line MDA (uCi/kg)	Nuclide MDA (uCi/kg)	Activity (uCi/kg)
	CO-60	1173.22	100.00	6.6362E-004	5.91E-004	-2.2844E-004
		1332.49	100.00	5.9136E-004		-3.1709E-004
	CS-134	475.35	1.46	4.4106E-002	8.26E-004	2.7271E-002
		563.23	8.38	8.1359E-003		2.7433E-004
		569.32	15.43	4.6059E-003		4.1205E-004
		604.70	97.60	8.2916E-004		-7.2864E-004
		795.84	85.40	8.2569E-004		-9.2172E-005
		801.93	8.73	7.5461E-003		-6.3213E-003
		1038.57	1.00	6.9723E-002		3.8223E-003
		1167.94	1.80	3.8299E-002		2.7501E-002
		1365.15	3.04	2.0133E-002		9.2227E-003
+	CS-137	661.65*	85.12	4.5074E-004	4.51E-004	1.2235E-003
+	NP-237	300.17*	6.20	7.5643E-003	1.24E-003	5.5820E-003
		312.00*	36.00	1.2424E-003		3.7587E-003
		340.60	4.20	2.1619E-002		1.0113E-002
		375.00*	0.68	6.2581E-002		3.5251E-001
		415.60*	1.75	2.4638E-002		1.2215E-001
+	Pu-239	129.28*	0.01	2.3471E+001	2.35E+001	1.3800E+002
		375.00*	0.00	2.6894E+001		1.5149E+002
		413.70*	0.00	2.8473E+001		1.4115E+002
		451.50*	0.00	2.0306E+002		2.3761E+002
+	AM-241	59.54*	35.70	1.0632E-002	1.06E-002	1.5029E+001
		125.28*	0.00	3.7429E+001		3.4783E+001
		335.40	0.00	1.7872E+002		2.6739E+002
		662.42*	0.00	1.0686E+002		2.5337E+002
		722.70	0.00	5.4652E+002		3.3461E+002
+	PU-241	114.00*	0.02	6.9451E+000	6.95E+000	4.9281E+000
		332.60*	0.00	1.5819E+001		2.3762E+001
	CM-243	209.70	3.27	3.3310E-002	6.06E-003	-2.5908E-002
		228.18	10.56	8.8216E-003		6.4410E-003
		277.60	14.00	6.0610E-003		4.1550E-003

+ = Nuclide identified during the nuclide identification
* = Energy line found in the spectrum
> = MDA value not calculated
@ = Half-life too short to be able to perform the decay correction

N U C L I D E T O T A L S

Nuclide	Mass (g)
Pu-239	2.27E-002 +/- 1.01E-003

Bldg 233-S
NDA Item Description Sheet
~~Pipe~~ Geometry

RECTANGULAR PLANE

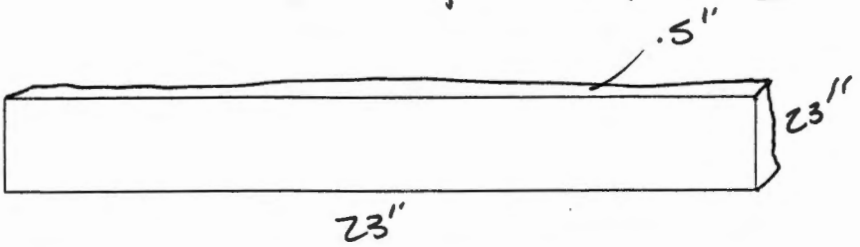

Put Dimensions on Pipe

Item ID: 1759

Weight (kg): 48.5

Material Description: STEEL PLATE

Packaging: 3 LAYERS

Detector Distance (in): 24"

Detector Filters: NONE

Dose Rate: <.5

Comments: SIDE A 900 SEC 1218
SIDE B 1800 SEC 1219

233-S Item Analysis

Spreadsheet Version 3.0b

1/14/02

Sample Info:

Item ID:	1759	**Assay Date:**	13-Feb-02
File Name:	1219	**File Name:**	

Data Input:

Isotope	Activity (uCi/kg)	Meas Uncert	Activity (uCi/kg)	Meas Uncert
Pu-239 (129)				
Pu-239 (414)	5.67E+01	6.53E+00		
Am-241	1.20E+01	1.01E+00		
Np-237	3.24E-03	2.67E-04		
U-238				
U-235				
Cs-137	4.11E-03	2.25E-04		
Co-60				

Item Parameters:

Contamination:	Surface only	Item Type:	Box	Calcs:	Use 1st

Dimensions:

Length (in):	23	Width (in):	23	Depth (in):	0.5
Weight (lbs):	48.5	Depth for TMU (in):	4	% Volume:	100

Am-241 Calcs:

Measured	1.20E+01	+/-	3.16E+00	Use Meas
Calculated	7.85E+01	+/-	3.80E+01	

Nuclide Activities:

Isotope	Activity (nCi/g)		Total Unc 1 sigma
Pu-238	2.30E+01	+/-	3.53E+00
Pu-239	5.67E+01	+/-	8.72E+00
Pu-240	2.95E+01	+/-	4.54E+00
Pu-241	1.10E+02	+/-	1.70E+01
Pu-242	2.98E-02	+/-	4.59E-03
Am-241	1.20E+01	+/-	3.16E+00
Np-237	3.24E-03	+/-	4.19E-04
U-238	0.00E+00	+/-	0.00E+00
U-235	0.00E+00	+/-	0.00E+00
Cs-137	4.11E-03	+/-	4.69E-04
Co-60	0.00E+00	+/-	0.00E+00

Results:

Total TRU Activity(nCi/g):	1.21E+02	+/-	1.09E+01	Calc from Pu-239 Act	
Pu (g):	2.33E-02	**Pu (g) + 3 sigma TMU:**	3.40E-02		
		Pu(g) + 3 sigma:	3.13E-02		

Comments:

Density error due to geometry.

Errors:Density > 1,

Analyst: Martin Winterrose

Date: 2/22/02

```
#Date & Time: Wed Feb 13 14:45:35 2002
~g=RECTANGULAR_PLANE
~description=1759_PLATE
~comment=1/2"_PLATE
~Ccollimator=50MM-180D
~crpn=4
~Detector=7219
~Convergence in %=1          ~MDRPN=4
~Lunit=IN  ~Tunit=C  ~Dunit=G/CU.C    ~Punit=MM.HG
~at=20        ~ap=760       ~rh=50
~Energies kev=   50.000,  100.000,  128.000,  130.000,  150.000,  200.000,#
                300.000,  500.000,  700.000, 1000.000, 1400.000, 2000.000,#
               4000.000,
~Error in %=     10.000,   10.000,   10.000,   10.000,   10.000,    8.000,#
                  8.000,    6.000,    6.000,    4.000,    4.000,    4.000,#
                  4.000,
~d1.1=0.024     ~d1.2=23        ~d1.3=23        ~1mater=POLYPROP ~1den=0.91
~d2.1=0.024     ~2mater=POLYPROP ~2den=0.91
~d3.1=0.024     ~3mater=DRYDIRT  ~3den=1.6       ~3con=0.5
~d4.1=0.5       ~4mater=304SS    ~4den=7.81
~d5.1=0.024     ~5mater=DRYDIRT  ~5den=1.6       ~5con=0.5
~d6.1=0.024     ~6mater=POLYPROP ~6den=0.91
~sd1=24
```

C A N B E R R A I S O C S A N A L Y S I S

Report Generated On : 2/13/02 2:46:44 PM

Sample Title : 1759 Side B
Spectrum Description :
Sample Identification : 1219
Sample Size : 22.0 kg

Sample Taken On : 2/13/02 2:01:00 PM
Acquisition Started : 2/13/02 2:01:23 PM

Live Time: 1800.0 seconds Real Time: 1831.6 seconds

ISOCS Calabration : 1759 PLATE
Energy Calibration Used Done On : 2/27/01
Efficiency Calibration Used Done On : 2/13/02

P E A K A N A L Y S I S R E P O R T

Peak No.	Peak centroid	Energy (keV)	Net Peak Area	Net Area Uncert.	Continuum Counts
1	239.26	59.90	9.23E+005	25912.6	1.23E+004
2	340.36	85.17	7.90E+002	77.73	3.85E+003
3	379.51	94.95	7.36E+002	67.02	3.67E+003
4	396.01	99.08	2.33E+003	100.38	3.55E+003
5	413.33	103.40	1.09E+003	80.88	3.42E+003
6	445.78	111.51	3.30E+002	54.93	3.39E+003
7	461.97	115.56	2.82E+002	55.01	3.23E+003
8	477.04	119.33	2.79E+002	52.20	3.07E+003
9	502.50	125.69	3.89E+002	50.51	2.86E+003
10	518.54	129.70	1.30E+003	58.94	2.68E+003
11	834.00	208.54	2.23E+002	24.05	4.37E+002
12	1201.52	300.39	4.95E+001	14.35	1.92E+002
13	1248.55	312.14	3.35E+002	22.44	1.77E+002
14	1332.22	333.05	9.91E+001	15.61	1.51E+002
15	1408.70	352.17	9.79E+001	14.68	1.28E+002
16	1501.31	375.31	2.79E+002	20.09	1.13E+002
17	1655.53	413.85	2.11E+002	17.84	9.44E+001
18	1808.47	452.07	3.15E+001	10.98	8.88E+001
19	2044.53	511.07	1.32E+002	16.88	6.61E+001
20	2438.28	609.48	8.83E+001	11.87	5.26E+001
21	2647.58	661.79	6.54E+002	29.33	3.54E+001
22	4484.67	1120.91	4.06E+001	8.35	1.37E+001
23	7065.75	1765.97	3.50E+001	7.14	3.04E+000

N U C L I D E I D E N T I F I C A T I O N R E P O R T

Nuclide Name	Id Confidence	Energy (keV)	Yield (%)	Activity (uCi)	Activity Uncertainty
CS-137	0.999	661.65*	85.12	4.11410E-003	2.25309E-004
NP-237	0.860	300.17*	6.20	2.72655E-003	8.01941E-004
		312.00*	36.00	3.23824E-003	2.66709E-004
		340.60	4.20		
		375.00*	0.68	1.58170E-001	1.33433E-002
		415.60*	1.75	4.90615E-002	4.62245E-003
Pu-239	0.994	129.28*	0.01	5.79346E+001	1.00737E+001
		375.00*	0.00	6.79730E+001	7.16795E+000
		413.70*	0.00	5.66969E+001	6.52935E+000
		451.50* @	0.00	7.12185E+001	2.50035E+001
AM-241	0.995	59.54*	35.70	1.19995E+001	1.01123E+000
		125.28*	0.00	2.68864E+001	3.72613E+000
		335.40	0.00		
		662.42* @	0.00	9.72757E+002	5.32082E+001
		722.70	0.00		
PU-241	0.916	114.00*	0.02	3.42066E+000	6.93039E-001
		332.60*	0.00	1.23426E+001	2.02866E+000

I N T E R F E R E N C E C O R R E C T E D R E P O R T

Nuclide Name	Nuclide Id Confidence	Wt mean Activity (uCi/kg)	Wt mean Activity Uncertainty
CS-137	0.999	4.059034E-003	2.250725E-004
NP-237	0.860	3.179484E-003	2.528258E-004
Pu-239 @	0.994	5.860833E+001	2.712767E+000
AM-241 @	0.995	1.302076E+001	9.759318E-001
PU-241	0.916	4.353094E+000	6.558254E-001

? = nuclide is part of an undetermined solution
X = nuclide rejected by the interference analysis
@ = nuclide contains energy lines not used in Weighted Mean Activity

Errors quoted at 1.000 sigma

****
***** N U C L I D E M D A R E P O R T *****
****

	Nuclide Name	Energy (keV)	Yield (%)	Line MDA (uCi/kg)	Nuclide MDA (uCi/kg)	Activity (uCi/kg)
	CO-60	1173.22	100.00	3.2602E-004	2.93E-004	-1.1065E-004
		1332.49	100.00	2.9277E-004		-1.7318E-004
	CS-134	475.35	1.46	2.3996E-002	3.76E-004	-2.3721E-003
		563.23	8.38	3.9482E-003		1.8867E-003
		569.32	15.43	2.1208E-003		-5.9951E-004
		604.70	97.60	3.7604E-004		-2.7373E-005
		795.84	85.40	3.9196E-004		-6.0618E-005
		801.93	8.73	3.8790E-003		-1.1995E-003
		1038.57	1.00	2.9299E-002		-3.3071E-002
		1167.94	1.80	1.7957E-002		-9.5567E-003
		1365.15	3.04	9.5057E-003		-2.2479E-003
+	CS-137	661.65*	85.12	1.9091E-004	1.91E-004	4.1141E-003
+	NP-237	300.17*	6.20	3.6985E-003	6.26E-004	2.7266E-003
		312.00*	36.00	6.2575E-004		3.2382E-003
		340.60	4.20	9.7428E-003		7.5964E-003
		375.00*	0.68	2.9500E-002		1.5817E-001
		415.60*	1.75	1.1156E-002		4.9062E-002
+	Pu-239	129.28*	0.01	1.0824E+001	1.08E+001	5.7935E+001
		375.00*	0.00	1.2678E+001		6.7973E+001
		413.70*	0.00	1.2892E+001		5.6697E+001
		451.50*	0.00	1.0532E+002		7.1218E+001
+	AM-241	59.54*	35.70	6.7459E-003	6.75E-003	1.2000E+001
		125.28*	0.00	1.7381E+001		2.6886E+001
		335.40	0.00	8.4058E+001		2.3897E+001
		662.42*	0.00	4.5140E+001		9.7276E+002
		722.70	0.00	2.3447E+002		-1.1486E+002
+	PU-241	114.00*	0.02	3.2461E+000	3.25E+000	3.4207E+000
		332.60*	0.00	7.4651E+000		1.2343E+001
	CM-243	209.70	3.27	1.5624E-002	2.87E-003	-6.5990E-003
		228.18	10.56	4.0428E-003		-2.0907E-003
		277.60	14.00	2.8671E-003		-3.7517E-004

+ = Nuclide identified during the nuclide identification
* = Energy line found in the spectrum
> = MDA value not calculated
@ = Half-life too short to be able to perform the decay correction

N U C L I D E T O T A L S

Nuclide	Mass (g)
Pu-239	2.08E-002 +/- 9.64E-004

Bldg 233s
NDA Item Description Sheet
Box Geometry

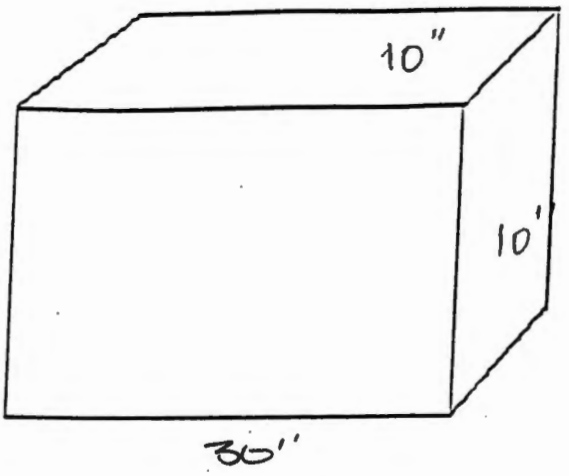

Put Dimensions on Box

351349

Item ID: 13B

Weight (kg): 38 LBS

Material Description: METAL FRAME ELECTRICAL PANEL COVER ?

Packaging: 3 LAYERS + POLY

Detector Distance (in): 24"

Detector Filters: NONE

Dose Rate: <.5

Comments: 1 SrOEA 900 1216
2 SiBRB 1800 1217

233-S Item Analysis

Spreadsheet Version 3.0b

1/14/02

Sample Info:

Item ID: 1313

File Name: 1217

Assay Date: 13-Feb-02

File Name:

Data Input:

Isotope	Activity (uCi/kg)	Meas Uncert	Activity (uCi/kg)	Meas Uncert
Pu-239 (129)	1.55E+01	4.97E+00		
Pu-239 (414)				
Am-241	4.33E+00	3.70E-01		
Np-237	1.71E-03	2.61E-04		
U-238				
U-235	5.38E-04	1.90E-04		
Cs-137	7.32E-04	1.19E-04		
Co-60				

Item Parameters:

Contamination: Internal

Item Type: Box

Calcs: Use 1st

Dimensions:

Length (in): 30

Width (in): 10

Depth (in): 10

Weight (lbs): 38

Depth for TMU (in): 4

% Volume: 100

Am-241 Calcs:

Measured	4.33E+00	+/-	6.73E+00	Use Meas
Calculated	2.14E+01	+/-	2.99E+01	

Nuclide Activities:

Isotope	Activity (nCi/g)		Total Unc 1 sigma
Pu-238	6.26E+00	+/-	3.45E+00
Pu-239	1.55E+01	+/-	8.52E+00
Pu-240	8.05E+00	+/-	4.44E+00
Pu-241	3.01E+01	+/-	1.66E+01
Pu-242	8.13E-03	+/-	4.48E-03
Am-241	4.33E+00	+/-	6.73E+00
Np-237	1.71E-03	+/-	4.63E-04
U-238	0.00E+00	+/-	0.00E+00
U-235	5.38E-04	+/-	2.25E-04
Cs-137	7.32E-04	+/-	2.02E-04
Co-60	0.00E+00	+/-	0.00E+00

Results:

Total TRU Activity(nCi/g):	3.41E+01	+/-	1.22E+01	Calc from Pu-239 Act
Pu (g):	4.97E-03	**Pu (g) + 3 sigma TMU:**	1.32E-02	
		Pu(g) + 3 sigma:	9.76E-03	

Comments:

Pu-239 value is from 375 keV rather than 129 keV

Errors:

Analyst: Martin Winterrose

Date: 2/26/02

```
#Date & Time: Wed Feb 13 12:40:58 2002
~g=SIMPLE_BOX
~description=1313_METAL
~comment=METAL_FRAME
~Ccollimator=50MM-180D
~crpn=4
~Detector=7219
~Convergence in %=1          ~MDRPN=4
~Lunit=IN  ~Tunit=C  ~Dunit=G/CU.C    ~Punit=MM.HG
~at=20        ~ap=760       ~rh=50
~Energies kev=   50.000,  100.000,  128.000,  130.000,  150.000,  200.000,#
                300.000,  500.000,  700.000, 1000.000, 1400.000, 2000.000,#
               4000.000,
~Error in %=     10.000,   10.000,   10.000,   10.000,   10.000,    8.000,#
                  8.000,    6.000,    6.000,    4.000,    4.000,    4.000,#
                  4.000,
~d1.1=0.0132    ~d1.2=30        ~d1.3=10        ~d1.4=10        ~1mater=LPOLYETH ~1den=0.92
~d3.1=9.95      ~3mater=SAMPLEHS ~3den=0.3513    ~3con=1
~sd1=24
```

C A N B E R R A I S O C S A N A L Y S I S

Report Generated On : 2/13/02 1:17:05 PM

Sample Title : 1313 Side B
Spectrum Description :
Sample Identification : 121~~8~~7 MW 2/13/02
Sample Size : 17.3 kg

Sample Taken On : 2/13/02 1:00:00 PM
Acquisition Started : 2/13/02 1:01:57 PM

Live Time: 1800.0 seconds Real Time: 1804.6 seconds

ISOCS Calabration : 1313 METAL
Energy Calibration Used Done On : 2/27/01
Efficiency Calibration Used Done On : 2/13/02

P E A K A N A L Y S I S R E P O R T

Peak No.	Peak centroid	Energy (keV)	Net Peak Area	Net Area Uncert.	Continuum Counts
1	197.82	49.54	4.18E+002	114.21	3.25E+003
2	239.23	59.89	7.23E+004	2300.72	2.20E+003
3	340.28	85.15	6.87E+002	55.81	2.18E+003
4	351.41	87.93	1.80E+002	51.52	2.20E+003
5	396.24	99.13	1.96E+002	46.37	2.22E+003
6	517.78	129.51	1.28E+002	41.84	1.96E+003
7	744.72	186.22	6.00E+001	20.99	4.95E+002
8	1248.67	312.17	1.05E+002	15.31	1.53E+002
9	1408.61	352.14	9.52E+001	14.40	1.20E+002
10	1500.53	375.11	3.79E+001	11.83	1.12E+002
11	2044.03	510.95	1.34E+002	14.21	6.14E+001
12	2438.72	609.59	1.22E+002	13.37	4.99E+001
13	2647.67	661.81	7.03E+001	11.24	4.11E+001
14	3647.29	911.63	6.42E+001	9.71	2.37E+001
15	7065.04	1765.79	3.63E+001	7.31	1.37E+000

NUCLIDE IDENTIFICATION REPORT

Nuclide Name	Id Confidence	Energy (keV)	Yield (%)	Activity (uCi)	Activity Uncertainty
CS-137	0.999	661.65*	85.12	7.31652E-004	1.19205E-004
U-235	0.643	143.76	10.50		
		185.71*	54.00	5.37777E-004	1.89818E-004
		205.31	4.70		
NP-237	0.605	300.17	6.20		
		312.00*	36.00	1.70924E-003	2.61414E-004
		340.60	4.20		
		375.00*	0.68	3.59565E-002	1.13372E-002
		415.60	1.75		
Pu-239	0.740	129.28*	0.01	1.05185E+001	3.87618E+000
		375.00*	0.00	1.54522E+001	4.96926E+000
		413.70	0.00		
		451.50 @	0.00		
AM-241	0.995	59.54*	35.70	4.32677E+000	3.70341E-001
		125.28	0.00		
		335.40	0.00		
		662.42* @	0.00	1.72995E+002	2.81816E+001
		722.70	0.00		

INTERFERENCE CORRECTED REPORT

Nuclide Name	Nuclide Id Confidence	Wt mean Activity (uCi/kg)	Wt mean Activity Uncertainty
CS-137	0.999	7.133526E-004	1.191994E-004
U-235	0.643	5.377773E-004	1.898177E-004
NP-237	0.605	1.712673E-003	2.613679E-004
Pu-239 @	0.740	1.193940E+001	2.834854E+000
AM-241 @	0.995	4.326771E+000	3.703414E-001

? = nuclide is part of an undetermined solution
X = nuclide rejected by the interference analysis
@ = nuclide contains energy lines not used in Weighted Mean Activity

Errors quoted at 1.000 sigma

****
***** N U C L I D E M D A R E P O R T *****
****

	Nuclide Name	Energy (keV)	Yield (%)	Line MDA (uCi/kg)	Nuclide MDA (uCi/kg)	Activity (uCi/kg)
	CO-60	1173.22	100.00	5.7675E-004	5.24E-004	1.8429E-004
		1332.49	100.00	5.2422E-004		3.5664E-004
	CS-134	475.35	1.46	3.6765E-002	6.30E-004	2.9129E-003
		563.23	8.38	6.2071E-003		4.4864E-004
		569.32	15.43	3.4098E-003		4.1320E-004
		604.70	97.60	6.8556E-004		-4.8370E-004
		795.84	85.40	6.3022E-004		2.1320E-004
		801.93	8.73	5.9281E-003		-6.9248E-003
		1038.57	1.00	5.1664E-002		-2.7880E-002
		1167.94	1.80	3.1471E-002		1.2887E-002
		1365.15	3.04	1.6044E-002		1.0480E-002
+	CS-137	661.65*	85.12	3.3864E-004	3.39E-004	7.3165E-004
+	NP-237	300.17	6.20	9.8884E-003	9.76E-004	9.0416E-003
		312.00*	36.00	9.7624E-004		1.7092E-003
		340.60	4.20	1.3988E-002		4.9872E-003
		375.00*	0.68	4.9252E-002		3.5957E-002
		415.60	1.75	3.3438E-002		5.7950E-003
+	Pu-239	129.28*	0.01	1.7199E+001	1.72E+001	1.0518E+001
		375.00*	0.00	2.1166E+001		1.5452E+001
		413.70	0.00	3.8660E+001		2.1728E+001
		451.50	0.00	2.9553E+002		-6.2143E+000
+	AM-241	59.54*	35.70	1.3225E-002	1.32E-002	4.3268E+000
		125.28	0.00	4.7224E+001		5.6920E+000
		335.40	0.00	1.1913E+002		-2.7603E+001
		662.42*	0.00	8.0070E+001		1.7300E+002
		722.70	0.00	4.1852E+002		1.7296E+002
	PU-241	114.00	0.02	9.2114E+000	9.21E+000	6.0152E+000
		332.60	0.00	1.9791E+001		1.0332E+001
	CM-243	209.70	3.27	2.2704E-002	4.19E-003	1.2231E-002
		228.18	10.56	6.4454E-003		-2.0030E-003
		277.60	14.00	4.1926E-003		-2.8265E-003

+ = Nuclide identified during the nuclide identification
* = Energy line found in the spectrum
> = MDA value not calculated
@ = Half-life too short to be able to perform the decay correction

N U C L I D E T O T A L S

Nuclide	Mass (g)
U-235	4.22E-003 +/- 1.49E-003
Pu-239	3.33E-003 +/- 7.90E-004

Bldg 233s
NDA Item Description Sheet
~~Box~~ Geometry
RECTANGULAR PLANTE

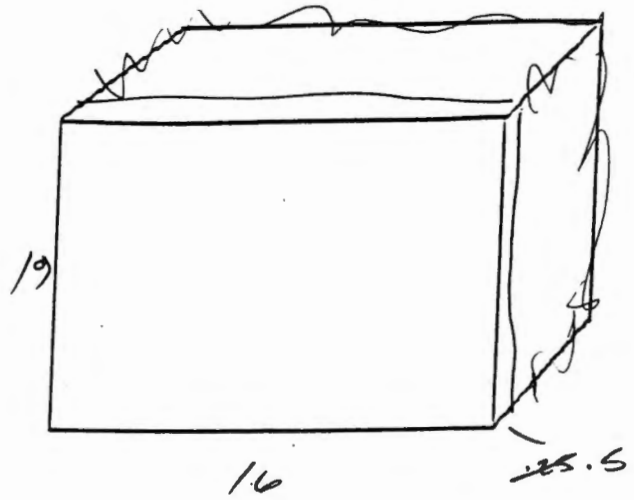

Put Dimensions on Box

Item ID: 1726

Weight (kg): 70 lb

Material Description: PLATE

Packaging: 3 LAYERS POLY

Detector Distance (in): 24"

Detector Filters: NONE

Dose Rate: <.5

Comments: A 900 SEL 1224
B 1800 1225

233-S Item Analysis

Spreadsheet Version 3.0b

1/14/02

Sample Info:

Item ID: 1726

File Name: 1225

Assay Date: 14-Feb-02

File Name:

Data Input:

Isotope	Activity (uCi/kg)	Meas Uncert	Activity (uCi/kg)	Meas Uncert
Pu-239 (129)				
Pu-239 (414)	4.16E+01	7.76E+00		
Am-241	7.62E+00	6.45E-01		
Np-237				
U-238				
U-235				
Cs-137	2.19E-03	2.08E-04		
Co-60				

Item Parameters:

Contamination: Surface only

Item Type: Box

Calcs: Use 1st

Dimensions:

Length (in): 16

Width (in): 19

Depth (in): 0.5

Weight (lbs): 20

Depth for TMU (in): 4

% Volume: 100

Am-241 Calcs:

Measured	7.62E+00	+/-	2.01E+00	Use Meas
Calculated	5.76E+01	+/-	3.48E+01	

Nuclide Activities:

Isotope	Activity (nCi/g)		Total Unc 1 sigma
Pu-238	1.69E+01	+/-	3.58E+00
Pu-239	4.16E+01	+/-	8.84E+00
Pu-240	2.17E+01	+/-	4.61E+00
Pu-241	8.10E+01	+/-	1.72E+01
Pu-242	2.19E-02	+/-	4.65E-03
Am-241	7.62E+00	+/-	2.01E+00
Np-237	0.00E+00	+/-	0.00E+00
U-238	0.00E+00	+/-	0.00E+00
U-235	0.00E+00	+/-	0.00E+00
Cs-137	2.19E-03	+/-	3.02E-04
Co-60	0.00E+00	+/-	0.00E+00

Results:

Total TRU Activity(nCi/g):	8.77E+01	+/-	1.08E+01	Calc from Pu-239 Act
Pu (g):	7.04E-03	**Pu (g) + 3 sigma TMU:**	1.15E-02	
		Pu(g) + 3 sigma:	1.10E-02	

Comments:

Density Error due to Geometry

Errors:Density > 1,

Analyst: Martin Winterrose

Date: 2/14/02

```
#Date & Time: Thu Feb 14 08:25:31 2002
~g=RECTANGULAR_PLANE
~description=1726_PLATE
~comment=1/4__PLATE
~Ccollimator=50MM-180D
~crpn=4
~Detector=7219
~Convergence in %=1            ~MDRPN=4
~Lunit=IN  ~Tunit=C  ~Dunit=G/CU.C    ~Punit=MM.HG
~at=20        ~ap=760       ~rh=50
~Energies kev=   50.000,  100.000,  128.000,  130.000,  150.000,  200.000,#
                300.000,  500.000,  700.000, 1000.000, 1400.000, 2000.000,#
               4000.000,
~Error in %=     10.000,   10.000,   10.000,   10.000,   10.000,    8.000,#
                  8.000,    6.000,    6.000,    4.000,    4.000,    4.000,#
                  4.000,
~d1.1=0.024     ~d1.2=19        ~d1.3=16        ~1mater=POLYPROP ~1den=0.91
~d2.1=0.024     ~2mater=POLYPROP ~2den=0.91
~d3.1=0.25      ~3mater=CELLULOS ~3den=0.45
~d4.1=0.024     ~4mater=DRYDIRT  ~4den=1.6       ~4con=0.5
~d5.1=0.25      ~5mater=304SS    ~5den=7.81
~d6.1=0.024     ~6mater=DRYDIRT  ~6den=1.6       ~6con=0.5
~d7.1=0.25      ~7mater=CELLULOS ~7den=0.45
~sd1=24
```

C A N B E R R A I S O C S A N A L Y S I S

Report Generated On : 2/14/02 9:01:27 AM

Sample Title : 1726 Side B
Spectrum Description :
Sample Identification : 1225
Sample Size : 9.1 kg

Sample Taken On : 2/14/02 8:46:00 AM
Acquisition Started : 2/14/02 8:46:18 AM

Live Time: 1800.0 seconds Real Time: 1810.4 seconds

ISOCS Calabration : 1726 PLATE
Energy Calibration Used Done On : 2/27/01
Efficiency Calibration Used Done On : 2/14/02

P E A K A N A L Y S I S R E P O R T

Peak No.	Peak centroid	Energy (keV)	Net Peak Area	Net Area Uncert.	Continuum Counts
1	239.26	59.90	2.55E+005	7451.56	3.87E+003
2	340.45	85.19	8.06E+002	63.83	2.72E+003
3	380.51	95.20	3.15E+002	54.30	2.76E+003
4	396.06	99.09	6.73E+002	58.55	2.74E+003
5	413.94	103.56	2.98E+002	52.57	2.72E+003
6	445.46	111.43	1.67E+002	52.18	2.81E+003
7	518.47	129.68	5.47E+002	49.85	2.38E+003
8	1500.63	375.14	6.97E+001	13.49	1.08E+002
9	1655.92	413.95	7.60E+001	12.88	8.48E+001
10	2043.92	510.92	1.35E+002	14.41	5.46E+001
11	2438.46	609.52	1.05E+002	12.67	3.96E+001
12	2647.53	661.77	1.69E+002	15.13	3.26E+001
13	7065.02	1765.79	4.27E+001	7.58	1.04E-005

NUCLIDE IDENTIFICATION REPORT

Nuclide Name	Id Confidence	Energy (keV)	Yield (%)	Activity (uCi)	Activity Uncertainty
CS-137	0.999	661.65*	85.12	2.18979E-003	2.07937E-004
Pu-239	0.968	129.28*	0.01	5.00138E+001	9.55457E+000
		375.00*	0.00	3.43933E+001	7.16633E+000
		413.70*	0.00	4.15872E+001	7.75511E+000
		451.50 @	0.00		
AM-241	0.995	59.54*	35.70	7.61895E+000	6.45039E-001
		125.28	0.00		
		335.40	0.00		
		662.42* @	0.00	5.17764E+002	4.91456E+001
		722.70	0.00		

INTERFERENCE CORRECTED REPORT

Nuclide Name	Nuclide Id Confidence	Wt mean Activity (uCi/kg)	Wt mean Activity Uncertainty
CS-137	0.999	2.157568E-003	2.078706E-004
Pu-239 @	0.968	4.057194E+001	4.610043E+000
AM-241 @	0.995	7.618951E+000	6.450393E-001

? = nuclide is part of an undetermined solution
X = nuclide rejected by the interference analysis
@ = nuclide contains energy lines not used in Weighted Mean Activity

Errors quoted at 1.000 sigma

****
***** N U C L I D E M D A R E P O R T *****
****

	Nuclide Name	Energy (keV)	Yield (%)	Line MDA (uCi/kg)	Nuclide MDA (uCi/kg)	Activity (uCi/kg)
	CO-60	1173.22	100.00	6.6658E-004	6.21E-004	-6.3980E-005
		1332.49	100.00	6.2068E-004		-1.3575E-004
	CS-134	475.35	1.46	4.4976E-002	7.59E-004	-2.1598E-002
		563.23	8.38	7.1741E-003		2.0140E-003
		569.32	15.43	3.9711E-003		6.2929E-004
		604.70	97.60	8.6090E-004		1.3729E-004
		795.84	85.40	7.5920E-004		4.6377E-004
		801.93	8.73	7.1118E-003		-1.0535E-002
		1038.57	1.00	6.7922E-002		3.9153E-002
		1167.94	1.80	3.9000E-002		3.3688E-002
		1365.15	3.04	1.9215E-002		-4.2521E-003
+	CS-137	661.65*	85.12	3.7947E-004	3.79E-004	2.1898E-003
	NP-237	300.17	6.20	1.1494E-002	1.84E-003	-8.3238E-003
		312.00	36.00	1.8431E-003		-1.1146E-003
		340.60	4.20	1.7569E-002		6.3301E-003
		375.00	0.68	1.1320E-001		1.2879E-001
		415.60	1.75	4.3743E-002		3.5116E-002
+	Pu-239	129.28*	0.01	2.0998E+001	2.10E+001	5.0014E+001
		375.00*	0.00	2.5179E+001		3.4393E+001
		413.70*	0.00	2.4909E+001		4.1587E+001
		451.50	0.00	3.5924E+002		3.0190E+002
+	AM-241	59.54*	35.70	8.7260E-003	8.73E-003	7.6190E+000
		125.28	0.00	5.7717E+001		4.1928E+001
		335.40	0.00	1.4863E+002		3.5429E+001
		662.42*	0.00	8.9724E+001		5.1776E+002
		722.70	0.00	5.6184E+002		1.7071E+002
	PU-241	114.00	0.02	1.0862E+001	1.09E+001	2.9467E+000
		332.60	0.00	2.4874E+001		2.8789E+000
	CM-243	209.70	3.27	2.8111E-002	5.48E-003	-1.4280E-004
		228.18	10.56	7.5613E-003		6.8834E-003
		277.60	14.00	5.4845E-003		3.1424E-003

+ = Nuclide identified during the nuclide identification
* = Energy line found in the spectrum
> = MDA value not calculated
@ = Half-life too short to be able to perform the decay correction

N U C L I D E T O T A L S

Nuclide	Mass (g)
Pu-239	5.95E-003 +/- 6.76E-004

Bldg 233-S
NDA Item Description Sheet
Pipe Geometry

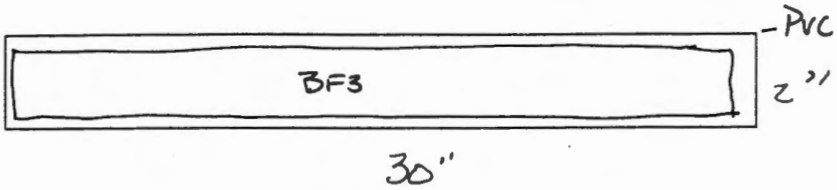

Put Dimensions on Pipe

Item ID: 3006

Weight (kg): 22LBS

Material Description: BF3 TUBE

Packaging: Poly & PVC Pipe

Detector Distance (in): 24

Detector Filters: NONE

Dose Rate: <1.5

Comments:

A900 1226
B180 1227

233-S Item Analysis

Spreadsheet Version 3.0b

1/14/02

Sample Info:

Item ID: 3006

File Name: 1227

Assay Date: 14-Feb-02

File Name:

Data Input:

Isotope	Activity (uCi/kg)	Meas Uncert	Activity (uCi/kg)	Meas Uncert
Pu-239 (129)	2.87E+02			
Pu-239 (414)				
Am-241	8.92E+00	7.51E-01		
Np-237				
U-238				
U-235				
Cs-137	1.19E-02	1.64E-03		
Co-60				

Item Parameters:

Contamination: Internal

Item Type: Pipe or Duct

Calcs: Use 1st

Dimensions:

Length (in): 30

Weight (lbs): 2

Width (in): 2

Depth for TMU (in): 4

Depth (in): 2

% Volume: 100

Am-241 Calcs:

Measured	8.92E+00	+/-	4.06E+00	Use Meas
Calculated	3.97E+02	+/-	2.51E+02	

Nuclide Activities:

Isotope	Activity (nCi/g)		Total Unc 1 sigma
Pu-238	1.16E+02	+/-	2.61E+01
Pu-239	2.87E+02	+/-	6.44E+01
Pu-240	1.50E+02	+/-	3.36E+01
Pu-241	5.59E+02	+/-	1.25E+02
Pu-242	1.51E-01	+/-	3.39E-02
Am-241	8.92E+00	+/-	4.06E+00
Np-237	0.00E+00	+/-	0.00E+00
U-238	0.00E+00	+/-	0.00E+00
U-235	0.00E+00	+/-	0.00E+00
Cs-137	1.19E-02	+/-	2.11E-03
Co-60	0.00E+00	+/-	0.00E+00

Results:

Total TRU Activity(nCi/g):	2.97E+01	+/-	1.35E+01	Calc from Am-241 Act
Pu (g): 4.86E-03	**Pu (g) + 3 sigma TMU:**		8.13E-03	
	Pu(g) + 3 sigma:		4.86E-03	

Comments:

Errors:

Analyst: Martin Winterrose

Date: 2/14/02

```
#Date & Time: Thu Feb 14 09:17:36 2002
~g=PIPE
~description=3006_BF3
~comment=BF3_TUBE
~Ccollimator=50MM-180D
~crpn=4
~Detector=7219
~Convergence in %=1          ~MDRPN=4
~Lunit=IN  ~Tunit=C  ~Dunit=G/CU.C    ~Punit=MM.HG
~at=20        ~ap=760       ~rh=50
~Energies kev=   50.000,  100.000,  128.000,  130.000,  150.000,  200.000,#
                300.000,  500.000,  700.000, 1000.000, 1400.000, 2000.000,#
               4000.000,
~Error in %=     10.000,   10.000,   10.000,   10.000,   10.000,    8.000,#
                  8.000,    6.000,    6.000,    4.000,    4.000,    4.000,#
                  4.000,
~d1.1=0.154     ~d1.2=2         ~d1.3=15        ~d1.4=15        ~1mater=PVC      ~1den=1.5
~d2.1=0.133     ~d2.2=15        ~d2.3=15        ~2mater=DRYDIRT  ~2den=1.6       ~2con=1
~d3.1=0.133     ~d3.2=15        ~d3.3=15        ~3mater=ALUMINUM ~3den=2.7
~sd1=24
```

C A N B E R R A I S O C S A N A L Y S I S

Report Generated On : 2/14/02 9:56:58 AM

Sample Title : 3006 Side B
Spectrum Description :
Sample Identification : 1227
Sample Size : 0.9 kg

Sample Taken On : 2/14/02 9:41:00 AM
Acquisition Started : 2/14/02 9:41:51 AM

Live Time: 1800.0 seconds Real Time: 1803.3 seconds

ISOCS Calabration : 3006 BF3
Energy Calibration Used Done On : 2/27/01
Efficiency Calibration Used Done On : 2/14/02

P E A K A N A L Y S I S R E P O R T

Peak No.	Peak centroid	Energy (keV)	Net Peak Area	Net Area Uncert.	Continuum Counts
1	239.25	59.90	3.30E+004	910.65	2.17E+003
2	340.24	85.14	1.07E+003	57.59	2.21E+003
3	351.30	87.90	1.85E+002	52.42	2.23E+003
4	2044.97	511.18	1.10E+002	14.12	6.10E+001
5	2438.34	609.49	1.01E+002	12.59	4.29E+001
6	2647.31	661.72	8.91E+001	11.89	3.81E+001
7	7064.63	1765.69	4.88E+001	8.04	3.24E+000

N U C L I D E I D E N T I F I C A T I O N R E P O R T

Nuclide Name	Id Confidence	Energy (keV)	Yield (%)	Activity (uCi)	Activity Uncertainty
CS-137	1.000	661.65*	85.12	1.19377E-002	1.63568E-003
AM-241	0.995	59.54*	35.70	8.92443E+000	7.50560E-001
		125.28	0.00		
		335.40	0.00		
		662.42* @	0.00	2.82261E+003	3.86672E+002
		722.70	0.00		

I N T E R F E R E N C E C O R R E C T E D R E P O R T

Nuclide Name	Nuclide Id Confidence	Wt mean Activity (uCi/kg)	Wt mean Activity Uncertainty
CS-137	1.000	1.189999E-002	1.635363E-003
AM-241	@ 0.995	8.924435E+000	7.505603E-001

? = nuclide is part of an undetermined solution
X = nuclide rejected by the interference analysis
@ = nuclide contains energy lines not used in Weighted Mean Activity

Errors quoted at 1.000 sigma

****
***** N U C L I D E M D A R E P O R T *****
****

	Nuclide Name	Energy (keV)	Yield (%)	Line MDA (uCi/kg)	Nuclide MDA (uCi/kg)	Activity (uCi/kg)
	CO-60	1173.22	100.00	6.8237E-003	6.82E-003	-1.0323E-003
		1332.49	100.00	7.4355E-003		-6.1293E-004
	CS-134	475.35	1.46	4.3605E-001	7.96E-003	-4.2657E-002
		563.23	8.38	8.0373E-002		-2.5705E-002
		569.32	15.43	4.1304E-002		1.6486E-003
		604.70	97.60	8.7445E-003		-1.1384E-004
		795.84	85.40	7.9594E-003		3.3528E-003
		801.93	8.73	7.8537E-002		3.4161E-002
		1038.57	1.00	6.6523E-001		1.6623E-001
		1167.94	1.80	3.8774E-001		4.2331E-002
		1365.15	3.04	2.0043E-001		-1.3044E-001
+	CS-137	661.65*	85.12	4.2096E-003	4.21E-003	1.1938E-002
	NP-237	300.17	6.20	1.1355E-001	1.85E-002	-2.3712E-002
		312.00	36.00	1.8454E-002		9.2793E-003
		340.60	4.20	1.5813E-001		-6.3231E-002
		375.00	0.68	9.4200E-001		1.9513E-001
		415.60	1.75	3.8143E-001		3.4134E-001
	Pu-239	129.28	0.01	2.8742E+002	2.87E+002	1.0727E+000
		375.00	0.00	4.0482E+002		8.3855E+001
		413.70	0.00	4.2638E+002		2.8279E+001
		451.50	0.00	3.4787E+003		5.4657E+002
+	AM-241	59.54*	35.70	5.9283E-002	5.93E-002	8.9244E+000
		125.28	0.00	4.5479E+002		-1.8711E+002
		335.40	0.00	1.3756E+003		6.2110E+002
		662.42*	0.00	9.9533E+002		2.8226E+003
		722.70	0.00	4.9691E+003		-2.9162E+002
	PU-241	114.00	0.02	8.4370E+001	8.44E+001	6.6549E+001
		332.60	0.00	2.3550E+002		-1.9419E+002
	CM-243	209.70	3.27	2.3799E-001	4.93E-002	-2.6907E-001
		228.18	10.56	7.1247E-002		3.2457E-002
		277.60	14.00	4.9254E-002		1.0413E-002

+ = Nuclide identified during the nuclide identification
* = Energy line found in the spectrum
> = MDA value not calculated
@ = Half-life too short to be able to perform the decay correction

N U C L I D E T O T A L S

Nuclide	Mass (g)

Bldg 233s
NDA Item Description Sheet
Box Geometry

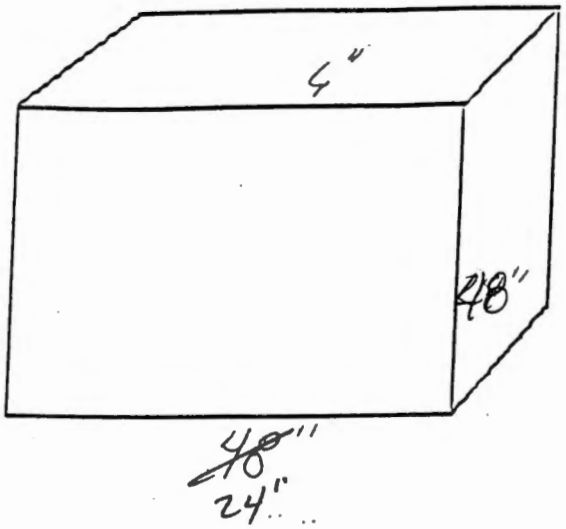

Put Dimensions on Box

Item ID: 2095 0.1685

Weight (kg): 42 Lbs

Material Description: HEPA

Packaging: 3 LAYER

Detector Distance (in): 44

Detector Filters: None

Dose Rate: <5

Comments: A ~~1800~~ 900 SEL 1229
B 1800 SEL 1230

233-S Item Analysis

Spreadsheet Version 3.0b

1/14/02

Sample Info:

Item ID:	2095	**Assay Date:**	14-Feb-02
File Name:	1230	**File Name:**	

Data Input:

Isotope	Activity (uCi/kg)	Meas Uncert	Activity (uCi/kg)	Meas Uncert
Pu-239 (129)	4.43E+01			
Pu-239 (414)				
Am-241	5.80E-03	1.60E-03		
Np-237				
U-238				
U-235				
Cs-137	1.74E-03	2.50E-04		
Co-60				

Item Parameters:

Contamination:	Internal	Item Type:	Box	Calcs:	Use 1st

Dimensions:

Length (in):	24	Width (in):	48	Depth (in):	6
Weight (lbs):	42	Depth for TMU (in):	4	% Volume:	100

Am-241 Calcs:

Measured	5.80E-03	+/-	4.05E-03	Use Meas
Calculated	6.13E-01	+/-	4.68E+01	

Nuclide Activities:

Isotope	Activity (nCi/g)		Total Unc 1 sigma
Pu-238	1.80E+01	+/-	5.09E+00
Pu-239	4.43E+01	+/-	1.26E+01
Pu-240	2.31E+01	+/-	6.55E+00
Pu-241	8.63E+01	+/-	2.45E+01
Pu-242	2.33E-02	+/-	6.61E-03
Am-241	5.80E-03	+/-	4.05E-03
Np-237	0.00E+00	+/-	0.00E+00
U-238	0.00E+00	+/-	0.00E+00
U-235	0.00E+00	+/-	0.00E+00
Cs-137	1.74E-03	+/-	3.51E-04
Co-60	0.00E+00	+/-	0.00E+00

Results:

Total TRU Activity(nCi/g):	8.54E+01	+/-	1.51E+01	Calc from Pu-239 MDA
Pu (g):	1.57E-02	**Pu (g) + 3 sigma TMU:**	2.91E-02	
		Pu(g) + 3 sigma:	1.57E-02	

Comments:

Pu MDA used to be conservitive.

Errors:

Analyst: Martin Winterrose

Date: 2/22/02

```
#Date & Time: Thu Feb 14 12:29:22 2002
~g=SIMPLE_BOX
~description=2095_HEPA
~comment=HEPA_FILTER
~Ccollimator=50MM-180D
~crpn=4
~Detector=7219
~Convergence in %=1          ~MDRPN=4
~Lunit=IN  ~Tunit=C  ~Dunit=G/CU.C    ~Punit=MM.HG
~at=20        ~ap=760       ~rh=50
~Energies kev=   50.000,  100.000,  128.000,  130.000,  150.000,  200.000,#
                300.000,  500.000,  700.000, 1000.000, 1400.000, 2000.000,#
               4000.000,
~Error in %=     10.000,   10.000,   10.000,   10.000,   10.000,    8.000,#
                  8.000,    6.000,    6.000,    4.000,    4.000,    4.000,#
                  4.000,
~d1.1=0.0132    ~d1.2=24        ~d1.3=48        ~d1.4=6         ~1mater=LPOLYETH ~1den=0.92
~d3.1=47.95     ~3mater=TYPMIX   ~3den=0.1685    ~3con=1
~sd1=44
```

C A N B E R R A I S O C S A N A L Y S I S

Report Generated On : 2/14/02 1:15:40 PM

Sample Title : 2095 Side B
Spectrum Description :
Sample Identification : 1230
Sample Size : 19.1 kg

Sample Taken On : 2/14/02 1:00:00 PM
Acquisition Started : 2/14/02 1:00:34 PM

Live Time: 1800.0 seconds Real Time: 1802.2 seconds

ISOCS Calabration : 2095 HEPA
Energy Calibration Used Done On : 2/27/01
Efficiency Calibration Used Done On : 2/14/02

P E A K A N A L Y S I S R E P O R T

Peak No.	Peak centroid	Energy (keV)	Net Peak Area	Net Area Uncert.	Continuum Counts
1	239.10	59.86	1.40E+002	37.02	1.79E+003
2	339.86	85.04	8.57E+002	62.20	2.29E+003
3	351.06	87.84	1.84E+002	55.15	2.31E+003
4	371.19	92.87	1.26E+002	47.01	2.33E+003
5	1409.24	352.30	6.74E+001	13.49	1.05E+002
6	2041.40	510.29	1.27E+002	15.23	6.69E+001
7	2051.49	512.81	6.09E+001	12.21	6.16E+001
8	2437.67	609.32	1.19E+002	13.24	5.01E+001
9	2648.17	661.93	8.42E+001	11.81	3.36E+001
10	3645.48	911.18	6.66E+001	10.08	2.74E+001
11	7064.40	1765.63	4.54E+001	7.89	1.38E+000

N U C L I D E I D E N T I F I C A T I O N R E P O R T

Nuclide Name	Id Confidence	Energy (keV)	Yield (%)	Activity (uCi)	Activity Uncertainty
CS-137	0.997	661.65*	85.12	1.73942E-003	2.50109E-004
AM-241	0.996	59.54*	35.70	5.80246E-003	1.60470E-003
		125.28	0.00		
		335.40	0.00		
		662.42* @	0.00	4.11276E+002	5.91265E+001
		722.70	0.00		

I N T E R F E R E N C E C O R R E C T E D R E P O R T

Nuclide Name	Nuclide Id Confidence	Wt mean Activity (uCi/kg)	Wt mean Activity Uncertainty
CS-137	0.997	1.739394E-003	2.500649E-004
AM-241 @	0.996	5.802458E-003	1.604703E-003

? = nuclide is part of an undetermined solution
X = nuclide rejected by the interference analysis
@ = nuclide contains energy lines not used in Weighted Mean Activity

Errors quoted at 1.000 sigma

****
***** N U C L I D E M D A R E P O R T *****
****

	Nuclide Name	Energy (keV)	Yield (%)	Line MDA (uCi/kg)	Nuclide MDA (uCi/kg)	Activity (uCi/kg)
	CO-60	1173.22	100.00	1.2915E-003	1.05E-003	-7.7943E-005
		1332.49	100.00	1.0467E-003		-2.8589E-005
	CS-134	475.35	1.46	7.2718E-002	1.32E-003	4.7429E-002
		563.23	8.38	1.3144E-002		-1.3955E-003
		569.32	15.43	7.1879E-003		-2.1973E-003
		604.70	97.60	1.3838E-003		3.2721E-004
		795.84	85.40	1.3241E-003		2.4371E-004
		801.93	8.73	1.3058E-002		2.7712E-003
		1038.57	1.00	1.1027E-001		1.5182E-001
		1167.94	1.80	7.4247E-002		5.7856E-002
		1365.15	3.04	3.0598E-002		1.3737E-002
+	CS-137	661.65*	85.12	6.1314E-004	6.13E-004	1.7394E-003
	NP-237	300.17	6.20	1.8746E-002	3.04E-003	2.9106E-003
		312.00	36.00	3.0404E-003		1.1255E-003
		340.60	4.20	2.5681E-002		6.8411E-003
		375.00	0.68	1.4981E-001		-3.1346E-002
		415.60	1.75	6.2384E-002		1.4174E-003
	Pu-239	129.28	0.01	4.4294E+001	4.43E+001	2.3242E+001
		375.00	0.00	6.4379E+001		-1.3471E+001
		413.70	0.00	7.1298E+001		-2.4581E+001
		451.50	0.00	5.6497E+002		1.5732E+002
+	AM-241	59.54*	35.70	8.2778E-003	8.28E-003	5.8025E-003
		125.28	0.00	7.0863E+001		2.5077E+001
		335.40	0.00	2.2200E+002		1.5593E+002
		662.42*	0.00	1.4497E+002		4.1128E+002
		722.70	0.00	8.8752E+002		9.8148E+002
	PU-241	114.00	0.02	1.3268E+001	1.33E+001	5.6704E+000
		332.60	0.00	3.6600E+001		-2.6501E+001
	CM-243	209.70	3.27	3.9888E-002	7.73E-003	1.3412E-002
		228.18	10.56	1.1500E-002		-2.9004E-003
		277.60	14.00	7.7336E-003		-7.4505E-003

+ = Nuclide identified during the nuclide identification
* = Energy line found in the spectrum
> = MDA value not calculated
@ = Half-life too short to be able to perform the decay correction

N U C L I D E T O T A L S

Nuclide	Mass (g)

Bldg 233s
NDA Item Description Sheet
Box Geometry

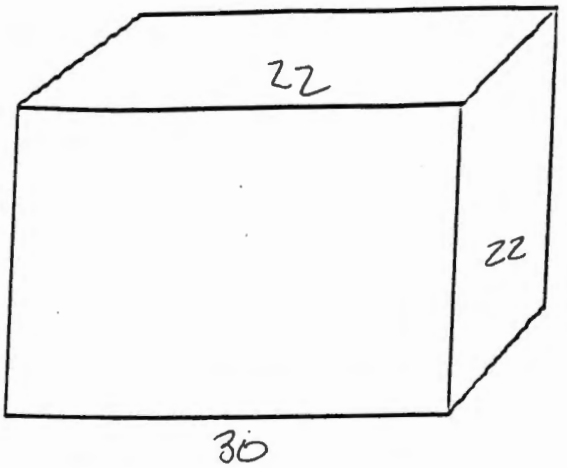

Put Dimensions on Box

Item ID: 1764

Weight (kg): 46 LBS

.0878

Material Description: Glove Bag

Packaging: 3 Layers

Detector Distance (in): 24

Detector Filters: None

Dose Rate: <.5

Comments: A 900 1331
B 1800 1732

233-S Item Analysis

Spreadsheet Version 3.0b

1/14/02

Sample Info:

Item ID: 1764

File Name: 1232

Assay Date: 14-Feb-02

File Name:

Data Input:

Isotope	Activity (uCi/kg)	Meas Uncert	Activity (uCi/kg)	Meas Uncert
Pu-239 (129)	2.37E+01			
Pu-239 (414)				
Am-241	9.76E-01	8.28E-02		
Np-237	1.85E-03	2.78E-04		
U-238				
U-235				
Cs-137	2.26E-02	8.64E-04		
Co-60	1.54E-03	1.16E-04		

Item Parameters:

Contamination: Internal

Item Type: Bag

Calcs: Use 1st

Dimensions:

Length (in): 30

Width (in): 22

Depth (in): 22

Weight (lbs): 46

Depth for TMU (in): 4

% Volume: 50

Am-241 Calcs:

Measured	9.76E-01	+/-	6.30E-01	Use Meas
Calculated	3.28E+01	+/-	2.50E+01	

Nuclide Activities:

Isotope	Activity (nCi/g)		Total Unc 1 sigma
Pu-238	9.60E+00	+/-	2.72E+00
Pu-239	2.37E+01	+/-	6.72E+00
Pu-240	1.23E+01	+/-	3.50E+00
Pu-241	4.62E+01	+/-	1.31E+01
Pu-242	1.25E-02	+/-	3.54E-03
Am-241	9.76E-01	+/-	6.30E-01
Np-237	1.85E-03	+/-	3.81E-04
U-238	0.00E+00	+/-	0.00E+00
U-235	0.00E+00	+/-	0.00E+00
Cs-137	2.26E-02	+/-	3.30E-03
Co-60	1.54E-03	+/-	2.47E-04

Results:

Total TRU Activity(nCi/g):	4.66E+01	+/-	8.08E+00	Calc from Pu-239 MDA
Pu (g):	9.23E-03	**Pu (g) + 3 sigma TMU:**	1.71E-02	
		Pu(g) + 3 sigma:	9.23E-03	

Comments:

Pu MDA used to be conservitive.

Errors:

Analyst: Martin Winterrose

Date: 2/14/02

```
#Date & Time: Thu Feb 14 13:52:42 2002
~g=SIMPLE_BOX
~Description=1764_GLOVEBAG
~Comment=GLOVEBAG
~Ccollimator=50MM-180D
~crpn=4
~Detector=7219
~Convergence in %=1          ~MDRPN=4
~Lunit=IN  ~Tunit=C  ~Dunit=G/CU.C    ~Punit=MM.HG
~at=20        ~ap=760       ~rh=50
~Energies kev=   50.000,  100.000,  128.000,  130.000,  150.000,  200.000,#
                300.000,  500.000,  700.000, 1000.000, 1400.000, 2000.000,#
               4000.000,
~Error in %=     10.000,   10.000,   10.000,   10.000,   10.000,    8.000,#
                  8.000,    6.000,    6.000,    4.000,    4.000,    4.000,#
                  4.000,
~d1.1=0.0132    ~d1.2=30        ~d1.3=22        ~d1.4=22        ~1mater=LPOLYETH ~1den=0.92
~d3.1=21.95     ~3mater=HPOLYETH ~3den=0.0878    ~3con=1
~sd1=24
```

C A N B E R R A I S O C S A N A L Y S I S

P...ort Generated On : 2/14/02 2:41:49 PM

Sample Title : 1764 Side B
Spectrum Description :
Sample Identification : 1232
Sample Size : 20.9 kg

Sample Taken On : 2/14/02 2:26:00 PM
Acquisition Started : 2/14/02 2:26:41 PM

Live Time: 1800.0 seconds Real Time: 1804.5 seconds

ISOCS Calabration : 1764 GLOVEBAG
Energy Calibration Used Done On : 2/27/01
Efficiency Calibration Used Done On : 2/14/02

P E A K A N A L Y S I S R E P O R T

Peak No.	Peak centroid	Energy (keV)	Net Peak Area	Net Area Uncert.	Continuum Counts
1	198.77	49.78	4.56E+002	125.82	3.28E+003
2	239.21	59.89	5.67E+004	1671.17	2.49E+003
3	340.83	85.28	8.64E+002	58.41	2.54E+003
4	349.97	87.57	2.43E+002	54.72	2.55E+003
5	395.18	98.87	2.31E+002	59.74	2.55E+003
6	409.71	102.50	1.74E+002	52.68	2.53E+003
7	1249.05	312.26	1.20E+002	17.07	1.86E+002
8	2044.39	511.04	1.33E+002	15.00	9.79E+001
9	2438.48	609.53	9.26E+001	12.92	6.74E+001
10	2647.23	661.70	2.18E+003	47.72	5.37E+001
11	2891.93	722.85	2.71E+001	8.84	4.15E+001
12	4695.62	1173.63	1.36E+002	13.28	2.52E+001
13	5333.04	1332.93	1.06E+002	11.45	1.22E+001
14	7064.17	1765.57	3.60E+001	7.23	1.16E+000

N U C L I D E I D E N T I F I C A T I O N R E P O R T

Nuclide Name	Id Confidence	Energy (keV)	Yield (%)	Activity (uCi)	Activity Uncertainty
CO-60	0.993	1173.22*	100.00	1.69150E-003	1.70430E-004
		1332.49*	100.00	1.41598E-003	1.57334E-004
CS-137	1.000	661.65*	85.12	2.25516E-002	8.63993E-004
NP-237	0.583	300.17	6.20		
		312.00*	36.00	1.84846E-003	2.77552E-004
		340.60	4.20		
		375.00	0.68		
		415.60	1.75		
AM-241	0.995	59.54*	35.70	9.76407E-001	8.27527E-002
		125.28	0.00		
		335.40	0.00		
		662.42* @	0.00	5.33220E+003	2.03778E+002
		722.70*	0.00	1.93466E+002	6.33043E+001

I N T E R F E R E N C E C O R R E C T E D R E P O R T

Nuclide Name	Nuclide Id Confidence	Wt mean Activity (uCi/kg)	Wt mean Activity Uncertainty
CO-60	0.993	1.542753E-003	1.156046E-004
CS-137	1.000	2.254748E-002	8.618414E-004
NP-237	0.583	1.848456E-003	2.775518E-004
AM-241 @	0.995	9.767358E-001	8.275266E-002

? = nuclide is part of an undetermined solution
X = nuclide rejected by the interference analysis
@ = nuclide contains energy lines not used in Weighted Mean Activity

Errors quoted at 1.000 sigma

```
*****************************************************************************
*  **              N U C L I D E   M D A   R E P O R T                 *****
*  ***************************************************************************
```

	Nuclide Name	Energy (keV)	Yield (%)	Line MDA (uCi/kg)	Nuclide MDA (uCi/kg)	Activity (uCi/kg)
+	CO-60	1173.22*	100.00	3.2312E-004	2.54E-004	1.6915E-003
		1332.49*	100.00	2.5386E-004		1.4160E-003
	CS-134	475.35	1.46	4.7823E-002	6.82E-004	7.8205E-003
		563.23	8.38	6.9476E-003		-4.1982E-004
		569.32	15.43	3.7743E-003		-2.0878E-003
		604.70	97.60	7.2461E-004		1.1639E-005
		795.84	85.40	6.8245E-004		-2.0358E-004
		801.93	8.73	6.7066E-003		6.2346E-004
		1038.57	1.00	5.2834E-002		-3.3796E-003
		1167.94	1.80	5.0002E-002		-1.2700E-002
		1365.15	3.04	1.5771E-002		1.1460E-002
+	CS-137	661.65*	85.12	3.8002E-004	3.80E-004	2.2552E-002
+	NP-237	300.17	6.20	1.0794E-002	1.02E-003	5.5415E-004
		312.00*	36.00	1.0195E-003		1.8485E-003
		340.60	4.20	1.4865E-002		-5.3363E-003
		375.00	0.68	9.4975E-002		-7.3218E-002
		415.60	1.75	3.8261E-002		-9.3619E-003
	Pu-239	129.28	0.01	2.3663E+001	2.37E+001	8.7759E+000
		375.00	0.00	4.0815E+001		-3.1465E+001
		413.70	0.00	4.4425E+001		9.2296E+000
		451.50	0.00	3.6490E+002		1.6467E+002
+	AM-241	59.54*	35.70	4.0423E-003	4.04E-003	9.7641E-001
		125.28	0.00	3.7984E+001		2.3660E+001
		335.40	0.00	1.3091E+002		7.4705E+001
		662.42*	0.00	8.9853E+001		5.3322E+003
		722.70*	0.00	2.3312E+002		1.9347E+002
	PU-241	114.00	0.02	6.9027E+000	6.90E+000	3.5843E+000
		332.60	0.00	2.2015E+001		-1.3257E+001
	CM-243	209.70	3.27	2.1788E-002	4.49E-003	-9.0700E-003
		228.18	10.56	6.3124E-003		-2.0622E-003
		277.60	14.00	4.4878E-003		-2.6692E-003

+ = Nuclide identified during the nuclide identification
* = Energy line found in the spectrum
> = MDA value not calculated
@ = Half-life too short to be able to perform the decay correction

N U C L I D E T O T A L S

Nuclide	Mass (g)

Bldg 233s
NDA Item Description Sheet
Box Geometry

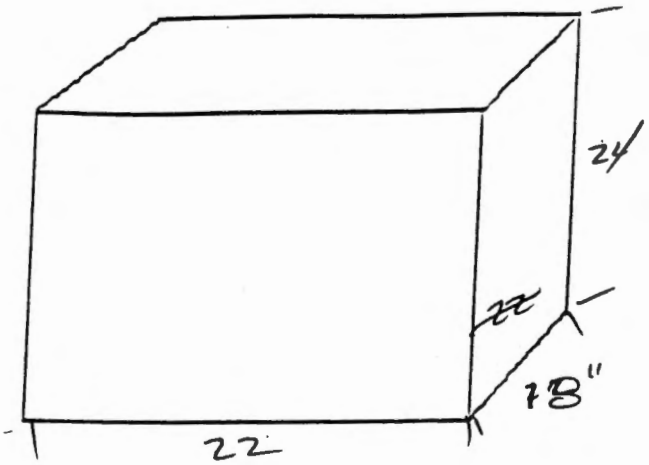

Put Dimensions on Box

Item ID: 1753

0.077342

Weight (kg): 26.5

Material Description: Waste

Packaging: 3 + Layers Poly

Detector Distance (in): 24

Detector Filters: None

Dose Rate: <.5

Comments: A 9005 1236

233-S Item Analysis

Spreadsheet Version 3.0b

1/14/02

Sample Info:

Item ID: 1753

File Name: 1237

Assay Date: 19-Feb-02

File Name:

Data Input:

Isotope	Activity (uCi/kg)	Meas Uncert	Activity (uCi/kg)	Meas Uncert
Pu-239 (129)				
Pu-239 (414)	2.74E+01	7.22E+00		
Am-241	2.84E+00	2.31E-04		
Np-237				
U-238				
U-235				
Cs-137	2.22E-03	2.31E-04		
Co-60				

Item Parameters:

Contamination: Internal

Item Type: Bag

Calcs: Use 1st

Dimensions:

Length (in): 22

Width (in): 24

Depth (in): 18

Weight (lbs): 26.5

Depth for TMU (in): 4

% Volume: 100

Am-241 Calcs:

Measured	2.84E+00	+/-	1.34E+00	Use Meas
Calculated	3.79E+01	+/-	2.92E+01	

Nuclide Activities:

Isotope	Activity (nCi/g)		Total Unc 1 sigma
Pu-238	1.11E+01	+/-	3.19E+00
Pu-239	2.74E+01	+/-	7.86E+00
Pu-240	1.43E+01	+/-	4.10E+00
Pu-241	5.34E+01	+/-	1.53E+01
Pu-242	1.44E-02	+/-	4.14E-03
Am-241	2.84E+00	+/-	1.34E+00
Np-237	0.00E+00	+/-	0.00E+00
U-238	0.00E+00	+/-	0.00E+00
U-235	0.00E+00	+/-	0.00E+00
Cs-137	2.22E-03	+/-	3.39E-04
Co-60	0.00E+00	+/-	0.00E+00

Results:

Total TRU Activity(nCi/g):	5.56E+01	+/-	9.51E+00	Calc from Pu-239 Act
Pu (g):	6.15E-03	**Pu (g) + 3 sigma TMU:**	1.14E-02	
		Pu(g) + 3 sigma:	1.10E-02	

Comments:

Errors:

Analyst: Martin Winterrose

Date: 2/19/02

```
#Date & Time: Tue Feb 19 08:41:39 2002
~g=SIMPLE_BOX
~description=1753_GLOVEBAG
~comment=GLOVEBAG
~Ccollimator=50MM-180D
~crpn=4
~Detector=7219
~Convergence in %=1          ~MDRPN=4
~Lunit=IN  ~Tunit=C  ~Dunit=G/CU.C    ~Punit=MM.HG
~at=20        ~ap=760       ~rh=50
~Energies kev=   50.000,  100.000,  128.000,  130.000,  150.000,  200.000,#
                300.000,  500.000,  700.000, 1000.000, 1400.000, 2000.000,#
               4000.000,
~Error in %=     10.000,   10.000,   10.000,   10.000,   10.000,    8.000,#
                  8.000,    6.000,    6.000,    4.000,    4.000,    4.000,#
                  4.000,
~d1.1=0.0132    ~d1.2=22        ~d1.3=24        ~d1.4=18        ~1mater=LPOLYETH ~1den=0.92
~d3.1=23.5      ~3mater=TYPMIX   ~3den=0.07734   ~3con=1
~sd1=24
```

C A N B E R R A I S O C S A N A L Y S I S

Report Generated On : 2/19/02 9:21:41 AM

Sample Title : 1753 Side B
Spectrum Description :
Sample Identification : 1237
Sample Size : 12.0 kg

Sample Taken On : 2/19/02 9:00:00 AM
Acquisition Started : 2/19/02 9:06:33 AM

Live Time: 1800.0 seconds Real Time: 1805.2 seconds

ISOCS Calabration : 1753 GLOVEBAG
Energy Calibration Used Done On : 2/27/01
Efficiency Calibration Used Done On : 2/19/02

P E A K A N A L Y S I S R E P O R T

Peak No.	Peak centroid	Energy (keV)	Net Peak Area	Net Area Uncert.	Continuum Counts
1	239.27	59.90	9.13E+004	2889.94	2.33E+003
2	340.12	85.11	7.63E+002	64.69	2.25E+003
3	395.31	98.90	2.87E+002	48.80	2.28E+003
4	519.01	129.82	2.54E+002	43.00	2.01E+003
5	1501.66	375.40	4.62E+001	11.98	1.06E+002
6	1656.51	414.10	4.30E+001	10.80	7.72E+001
7	2045.13	511.22	1.42E+002	15.92	6.81E+001
8	2438.15	609.44	1.07E+002	12.51	5.04E+001
9	2647.93	661.87	1.46E+002	14.48	4.30E+001
10	7065.10	1765.80	4.25E+001	7.59	2.63E+000

NUCLIDE IDENTIFICATION REPORT

Nuclide Name	Id Confidence	Energy (keV)	Yield (%)	Activity (uCi)	Activity Uncertainty
CS-137	0.998	661.65*	85.12	2.22051E-003	2.31496E-004
Pu-239	0.965	129.28*	0.01	2.34344E+001	5.58254E+000
		375.00*	0.00	2.64586E+001	7.16197E+000
		413.70*	0.00	2.74216E+001	7.21796E+000
		451.50 @	0.00		
AM-241	0.994	59.54*	35.70	2.84284E+000	2.43155E-001
		125.28	0.00		
		335.40	0.00		
		662.42* @	0.00	5.25027E+002	5.47176E+001
		722.70	0.00		

INTERFERENCE CORRECTED REPORT

Nuclide Name		Nuclide Id Confidence	Wt mean Activity (uCi/kg)	Wt mean Activity Uncertainty
CS-137		0.998	2.208487E-003	2.314210E-004
Pu-239	@	0.965	2.534874E+001	3.758832E+000
AM-241	@	0.994	2.842845E+000	2.431551E-001

? = nuclide is part of an undetermined solution
X = nuclide rejected by the interference analysis
@ = nuclide contains energy lines not used in Weighted Mean Activity

Errors quoted at 1.000 sigma

****
***** N U C L I D E M D A R E P O R T *****
****

	Nuclide Name	Energy (keV)	Yield (%)	Line MDA (uCi/kg)	Nuclide MDA (uCi/kg)	Activity (uCi/kg)
	CO-60	1173.22	100.00	9.9184E-004	8.00E-004	1.0263E-004
		1332.49	100.00	7.9970E-004		-7.2111E-004
	CS-134	475.35	1.46	5.0227E-002	9.03E-004	3.2557E-002
		563.23	8.38	8.4848E-003		2.7297E-003
		569.32	15.43	4.7800E-003		2.7188E-003
		604.70	97.60	9.8748E-004		-3.2669E-004
		795.84	85.40	9.0323E-004		-2.8982E-004
		801.93	8.73	9.0905E-003		5.6994E-003
		1038.57	1.00	7.3668E-002		7.0093E-002
		1167.94	1.80	5.4073E-002		5.9595E-003
		1365.15	3.04	2.4046E-002		1.3718E-002
+	CS-137	661.65*	85.12	5.0649E-004	5.06E-004	2.2205E-003
	NP-237	300.17	6.20	1.3134E-002	2.29E-003	-2.6030E-003
		312.00	36.00	2.2941E-003		3.1251E-003
		340.60	4.20	1.9181E-002		2.0886E-002
		375.00	0.68	1.2094E-001		9.3242E-002
		415.60	1.75	4.5449E-002		3.3741E-002
+	Pu-239	129.28*	0.01	1.9463E+001	1.95E+001	2.3434E+001
		375.00*	0.00	2.8952E+001		2.6459E+001
		413.70*	0.00	2.7829E+001		2.7422E+001
		451.50	0.00	3.9081E+002		7.1635E+000
+	AM-241	59.54*	35.70	7.0712E-003	7.07E-003	2.8428E+000
		125.28	0.00	5.2304E+001		-2.2871E+001
		335.40	0.00	1.6457E+002		5.6140E+001
		662.42*	0.00	1.1976E+002		5.2503E+002
		722.70	0.00	6.1712E+002		-2.0882E+001
	PU-241	114.00	0.02	9.7363E+000	9.74E+000	-3.2304E+000
		332.60	0.00	2.7102E+001		-1.0134E+001
	CM-243	209.70	3.27	2.8242E-002	5.97E-003	3.2921E-003
		228.18	10.56	8.2973E-003		2.9596E-003
		277.60	14.00	5.9685E-003		1.1174E-003

+ = Nuclide identified during the nuclide identification
* = Energy line found in the spectrum
> = MDA value not calculated
@ = Half-life too short to be able to perform the decay correction

N U C L I D E T O T A L S

Nuclide	Mass (g)
Pu-239	4.92E-003 +/- 7.30E-004

Bldg 233s
NDA Item Description Sheet
Box Geometry

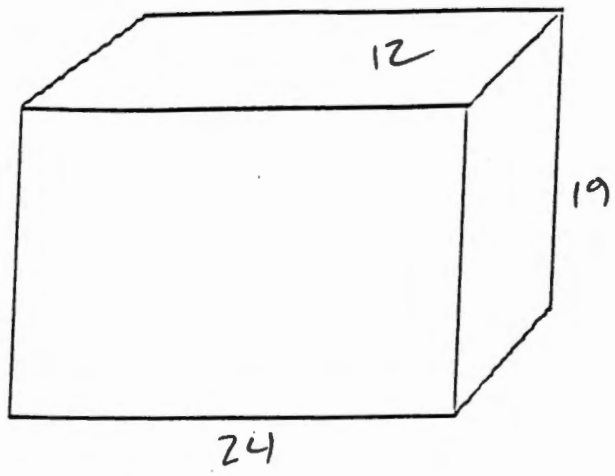

Put Dimensions on Box

0.1520

Item ID: 1749

Weight (kg): 30464 13.63

Material Description: HEPA

Packaging: 3 LAYERS

Detector Distance (in): 24"

Detector Filters: NONE

Dose Rate: <.5

Comments: SLDR 1A 900 1238
SLDR 3 1800 1239

233-S Item Analysis

Spreadsheet Version 3.0b 01/14/2002

Sample Info:

Item ID:	1749	**Assay Date:**	19-Feb-02
File Name:	1239	**File Name:**	

Data Input:

Isotope	Activity (uCi/kg)	Meas Uncert	Activity (uCi/kg)	Meas Uncert
Pu-239 (129)	2.77E+01			
Pu-239 (414)				
Am-241	4.57E-01	3.77E-02		
Np-237				
U-238				
U-235				
Cs-137	9.22E-04	1.37E-04		
Co-60				

Item Parameters:

Contamination:	Internal	Item Type:	Box	Calcs:	Use 1st

Dimensions:

Length (in):	24	Width (in):	19	Depth (in):	12
Weight (lbs):	37.5	Depth for TMU (in):	4	% Volume:	100

Am-241 Calcs:

Measured	4.57E-01	+/-	2.95E-01	Use Meas
Calculated	3.83E+01	+/-	2.92E+01	

Nuclide Activities:

Isotope	Activity (nCi/g)		Total Unc 1 sigma
Pu-238	1.12E+01	+/-	3.18E+00
Pu-239	2.77E+01	+/-	7.85E+00
Pu-240	1.44E+01	+/-	4.09E+00
Pu-241	5.39E+01	+/-	1.53E+01
Pu-242	1.46E-02	+/-	4.13E-03
Am-241	4.57E-01	+/-	2.95E-01
Np-237	0.00E+00	+/-	0.00E+00
U-238	0.00E+00	+/-	0.00E+00
U-235	0.00E+00	+/-	0.00E+00
Cs-137	9.22E-04	+/-	1.89E-04
Co-60	0.00E+00	+/-	0.00E+00

Results:

Total TRU Activity(nCi/g):	5.38E+01	+/-	9.42E+00	Calc from Pu-239 MDA
Pu (g):	8.79E-03	**Pu (g) + 3 sigma TMU:**	1.63E-02	
		Pu(g) + 3 sigma:	8.79E-03	

Comments:

Pu-239 MDA used for Characterization

Errors:

Analyst: Martin Winterrose **Date:** 02/25/2002

```
#Date & Time: Fri Feb 22 12:40:47 2002
~g=SIMPLE_BOX
~description=1749_HEPA
~comment=HEPA_FILTER
~Ccollimator=50MM-180D
~crpn=4
~Detector=7219
~Convergence in %=1            ~MDRPN=4
~Lunit=IN  ~Tunit=C  ~Dunit=G/CU.C    ~Punit=MM.HG
~at=20        ~ap=760        ~rh=50
~Energies kev=   50.000,  100.000,  128.000,  130.000,  150.000,  200.000,#
                300.000,  500.000,  700.000, 1000.000, 1400.000, 2000.000,#
               4000.000,
~Error in %=     10.000,   10.000,   10.000,   10.000,   10.000,    8.000,#
                  8.000,    6.000,    6.000,    4.000,    4.000,    4.000,#
                  4.000,
~d1.1=0.0132    ~d1.2=24        ~d1.3=19        ~d1.4=12        ~1mater=LPOLYET
~d3.1=18.95     ~3mater=TYPMIX   ~3den=0.152     ~3con=1
~sd1=24
```

C A N B E R R A I S O C S A N A L Y S I S

Report Generated On : 2/22/02 12:42:08 PM

Sample Title : 1749 Side B
Spectrum Description :
Sample Identification : 1239
Sample Size : 13.6 kg

Sample Taken On : 2/19/02 10:04:00 AM
Acquisition Started : 2/19/02 10:05:10 AM

Live Time: 1800.0 seconds Real Time: 1802.7 seconds

ISOCS Calabration : 1749 HEPA
Energy Calibration Used Done On : 2/27/01
Efficiency Calibration Used Done On : 2/22/02

P E A K A N A L Y S I S R E P O R T

Peak No.	Peak centroid	Energy (keV)	Net Peak Area	Net Area Uncert.	Continuum Counts
1	239.25	59.90	1.63E+004	363.81	1.88E+003
2	1408.76	352.18	8.87E+001	13.55	1.11E+002
3	2044.09	510.96	1.31E+002	16.47	6.11E+001
4	2436.75	609.09	7.56E+001	11.32	5.00E+001
5	2646.36	661.48	7.59E+001	11.00	3.84E+001
6	7064.39	1765.63	3.30E+001	6.97	1.58E+000

N U C L I D E I D E N T I F I C A T I O N R E P O R T

Nuclide Name	Id Confidence	Energy (keV)	Yield (%)	Activity (uCi)	Activity Uncertainty
CS-137	0.999	661.65*	85.12	9.21762E-004	1.36733E-004
AM-241	0.995	59.54*	35.70	4.56682E-001	3.76879E-002
		125.28	0.00		
		335.40	0.00		
		662.42* @	0.00	2.17945E+002	3.23243E+001
		722.70	0.00		

I N T E R F E R E N C E C O R R E C T E D R E P O R T

Nuclide Name	Nuclide Id Confidence	Wt mean Activity (uCi/kg)	Wt mean Activity Uncertainty
CS-137	0.999	9.198305E-004	1.367099E-004
AM-241 @	0.995	4.566822E-001	3.768793E-002

? = nuclide is part of an undetermined solution
X = nuclide rejected by the interference analysis
@ = nuclide contains energy lines not used in Weighted Mean Activity

Errors quoted at 1.000 sigma

****
**** N U C L I D E M D A R E P O R T *****
****

	Nuclide Name	Energy (keV)	Yield (%)	Line MDA (uCi/kg)	Nuclide MDA (uCi/kg)	Activity (uCi/kg)
	CO-60	1173.22	100.00	6.8977E-004	5.96E-004	1.9946E-004
		1332.49	100.00	5.9642E-004		-5.4401E-004
	CS-134	475.35	1.46	4.0214E-002	7.11E-004	-4.4852E-003
		563.23	8.38	7.1314E-003		-7.0960E-003
		569.32	15.43	4.1909E-003		4.3452E-003
		604.70	97.60	7.3966E-004		3.6168E-004
		795.84	85.40	7.1130E-004		-2.9162E-004
		801.93	8.73	7.0762E-003		-2.2017E-003
		1038.57	1.00	6.0698E-002		-2.8126E-002
		1167.94	1.80	3.5361E-002		1.2139E-002
		1365.15	3.04	1.7489E-002		-1.3653E-003
+	CS-137	661.65*	85.12	3.8287E-004	3.83E-004	9.2176E-004
	NP-237	300.17	6.20	1.0782E-002	1.73E-003	4.0149E-003
		312.00	36.00	1.7346E-003		1.1980E-003
		340.60	4.20	1.5285E-002		1.5596E-002
		375.00	0.68	8.9529E-002		-7.7712E-003
		415.60	1.75	3.2444E-002		-2.2810E-002
	Pu-239	129.28	0.01	2.7725E+001	2.77E+001	2.9858E+001
		375.00	0.00	3.8475E+001		-3.3396E+000
		413.70	0.00	3.8173E+001		-1.5681E+001
		451.50	0.00	3.1329E+002		-1.6263E+002
+	AM-241	59.54*	35.70	5.7211E-003	5.72E-003	4.5668E-001
		125.28	0.00	4.3529E+001		-3.8289E+001
		335.40	0.00	1.2882E+002		9.4667E+001
		662.42*	0.00	9.0528E+001		2.1795E+002
		722.70	0.00	4.7439E+002		-4.5437E+001
	PU-241	114.00	0.02	8.1053E+000	8.11E+000	2.7799E+000
		332.60	0.00	2.0935E+001		-8.9527E+000
	CM-243	209.70	3.27	2.2824E-002	4.69E-003	-2.1535E-003
		228.18	10.56	6.6875E-003		5.4485E-004
		277.60	14.00	4.6874E-003		-1.6368E-003

+ = Nuclide identified during the nuclide identification
* = Energy line found in the spectrum
> = MDA value not calculated
@ = Half-life too short to be able to perform the decay correction

N U C L I D E T O T A L S

Nuclide	Mass (g)

Bldg 233s
NDA Item Description Sheet
Box Geometry

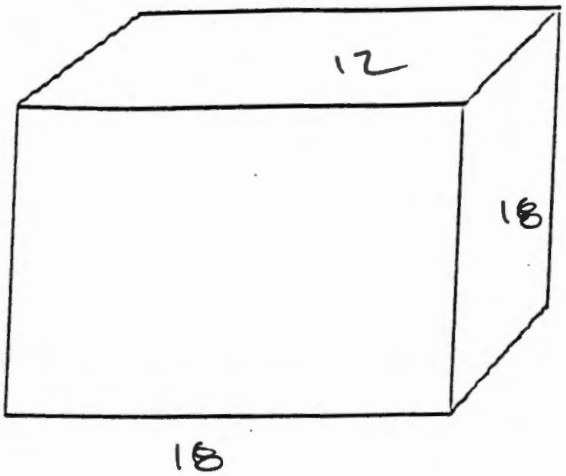

Put Dimensions on Box

.2211

Item ID: 11.21

Weight (kg): 31 LBS

Material Description: GLOVE BAG

Packaging: 3 LAYERS

Detector Distance (in): 24

Detector Filters: NONE.

Dose Rate: <.5

Comments: SIZE A 900 1243

233-S Item Analysis

Spreadsheet Version 3.0b

1/14/02

Sample Info:

Item ID: 1621

File Name: 1244

Assay Date: 19-Feb-02

File Name:

Data Input:

Isotope	Activity (uCi/kg)	Meas Uncert	Activity (uCi/kg)	Meas Uncert
Pu-239 (129)	9.92E+00	3.75E+00		
Pu-239 (414)				
Am-241	1.62E+00	1.39E-01		
Np-237	7.25E-04	2.46E-04		
U-238				
U-235				
Cs-137	5.83E-04	2.66E-04		
Co-60				

Item Parameters:

Contamination: Internal

Item Type: Bag

Calcs: Use 1st

Dimensions:

Length (in): 18

Width (in): 18

Depth (in): 12

Weight (lbs): 31

Depth for TMU (in): 4

% Volume: 100

Am-241 Calcs:

Measured	1.62E+00	+/-	1.05E+00	Use Meas
Calculated	1.37E+01	+/-	1.66E+01	

Nuclide Activities:

Isotope	Activity (nCi/g)		Total Unc 1 sigma
Pu-238	4.02E+00	+/-	1.90E+00
Pu-239	9.92E+00	+/-	4.69E+00
Pu-240	5.17E+00	+/-	2.44E+00
Pu-241	1.93E+01	+/-	9.13E+00
Pu-242	5.22E-03	+/-	2.47E-03
Am-241	1.62E+00	+/-	1.05E+00
Np-237	7.25E-04	+/-	2.66E-04
U-238	0.00E+00	+/-	0.00E+00
U-235	0.00E+00	+/-	0.00E+00
Cs-137	5.83E-04	+/-	2.78E-04
Co-60	0.00E+00	+/-	0.00E+00

Results:

Total TRU Activity(nCi/g):	2.07E+01	+/-	5.71E+00	Calc from Pu-239 Act
Pu (g):	2.60E-03	**Pu (g) + 3 sigma TMU:**	6.29E-03	
		Pu(g) + 3 sigma:	5.56E-03	

Comments:

Errors:

Analyst: Martin Winterrose

Date: 2/19/02

```
#Date & Time: Tue Feb 19 15:21:58 2002
~g=SIMPLE_BOX
~description=1621_GLOVE_BAG
~comment=GLOVE_BAG
~Ccollimator=50MM-180D
~crpn=4
~Detector=7219
~Convergence in %=1            ~MDRPN=4
~Lunit=IN  ~Tunit=C  ~Dunit=G/CU.C    ~Punit=MM.HG
~at=20        ~ap=760       ~rh=50
~Energies kev=   50.000,  100.000,  128.000,  130.000,  150.000,  200.000,#
                300.000,  500.000,  700.000, 1000.000, 1400.000, 2000.000,#
               4000.000,
~Error in %=     10.000,   10.000,   10.000,   10.000,   10.000,    8.000,#
                  8.000,    6.000,    6.000,    4.000,    4.000,    4.000,#
                  4.000,
~d1.1=0.0132    ~d1.2=18        ~d1.3=18        ~d1.4=12        ~1mater=LPOLYETH ~1den=0.92
~d3.1=17.95     ~3mater=HPOLYETH ~3den=0.2211    ~3con=1
~sd1=24
```

C A N B E R R A I S O C S A N A L Y S I S

Report Generated On : 2/19/02 3:56:09 PM

Sample Title : 1621 Side B
Spectrum Description :
Sample Identification : 1244
Sample Size : 14.1 kg

Sample Taken On : 2/19/02 3:30:00 PM
Acquisition Started : 2/19/02 3:41:01 PM

Live Time: 1800.0 seconds Real Time: 1805.0 seconds

ISOCS Calabration : 1621 GLOVE_BA
Energy Calibration Used Done On : 2/27/01
Efficiency Calibration Used Done On : 2/19/02

P E A K A N A L Y S I S R E P O R T

Peak No.	Peak centroid	Energy (keV)	Net Peak Area	Net Area Uncert.	Continuum Counts
1	239.20	59.89	7.37E+004	2388.58	2.41E+003
2	340.17	85.12	6.51E+002	55.74	2.26E+003
3	350.49	87.70	2.46E+002	52.09	2.27E+003
4	517.72	129.49	1.23E+002	41.64	1.96E+003
5	955.41	238.88	9.20E+001	17.60	2.18E+002
6	1247.98	312.00	3.80E+001	12.80	1.21E+002
7	2044.65	511.10	1.25E+002	16.48	5.90E+001
8	2437.42	609.26	6.57E+001	10.65	3.72E+001
9	2645.89	661.36	4.69E+001	21.37	3.49E+001
10	7063.03	1765.29	3.81E+001	7.31	5.77E-001

NUCLIDE IDENTIFICATION REPORT

Nuclide Name	Id Confidence	Energy (keV)	Yield (%)	Activity (uCi)	Activity Uncertainty
CS-137	0.997	661.65*	85.12	5.82623E-004	2.65885E-004
NP-237	0.606	300.17	6.20		
		312.00*	36.00	7.24710E-004	2.46460E-004
		340.60	4.20		
		375.00	0.68		
		415.60	1.75		
Pu-239	0.524	129.28*	0.01	9.92476E+000	3.75010E+000
		375.00	0.00		
		413.70	0.00		
		451.50 @	0.00		
AM-241	0.995	59.54*	35.70	1.62085E+000	1.39084E-001
		125.28	0.00		
		335.40	0.00		
		662.42* @	0.00	1.37758E+002	6.28659E+001
		722.70	0.00		

INTERFERENCE CORRECTED REPORT

Nuclide Name	Nuclide Id Confidence	Wt mean Activity (uCi/kg)	Wt mean Activity Uncertainty
CS-137	0.997	5.757677E-004	2.658812E-004
NP-237	0.606	7.247097E-004	2.464603E-004
Pu-239 @	0.524	9.924756E+000	3.750102E+000
AM-241 @	0.995	1.620846E+000	1.390844E-001

? = nuclide is part of an undetermined solution
X = nuclide rejected by the interference analysis
@ = nuclide contains energy lines not used in Weighted Mean Activity

Errors quoted at 1.000 sigma

****
***** N U C L I D E M D A R E P O R T *****
****

	Nuclide Name	Energy (keV)	Yield (%)	Line MDA (uCi/kg)	Nuclide MDA (uCi/kg)	Activity (uCi/kg)
	CO-60	1173.22	100.00	6.7791E-004	5.59E-004	-1.8748E-004
		1332.49	100.00	5.5925E-004		6.6279E-004
	CS-134	475.35	1.46	4.2931E-002	7.09E-004	4.8291E-003
		563.23	8.38	7.2375E-003		-2.2849E-003
		569.32	15.43	3.9667E-003		1.4123E-003
		604.70	97.60	7.0908E-004		2.3894E-004
		795.84	85.40	7.2984E-004		-4.9676E-004
		801.93	8.73	6.9039E-003		-4.3606E-003
		1038.57	1.00	6.3152E-002		-1.2670E-002
		1167.94	1.80	3.7359E-002		-1.7668E-002
		1365.15	3.04	1.5997E-002		-1.6668E-002
+	CS-137	661.65*	85.12	3.7463E-004	3.75E-004	5.8262E-004
+	NP-237	300.17	6.20	1.1200E-002	1.03E-003	9.1015E-003
		312.00*	36.00	1.0271E-003		7.2471E-004
		340.60	4.20	1.5131E-002		6.7977E-003
		375.00	0.68	8.9911E-002		6.4467E-002
		415.60	1.75	3.6133E-002		1.7320E-002
+	Pu-239	129.28*	0.01	1.6853E+001	1.69E+001	9.9248E+000
		375.00	0.00	3.8639E+001		2.7705E+001
		413.70	0.00	4.1262E+001		-9.7199E+000
		451.50	0.00	3.0678E+002		-1.1659E+002
+	AM-241	59.54*	35.70	5.0808E-003	5.08E-003	1.6208E+000
		125.28	0.00	4.5355E+001		-7.6471E+000
		335.40	0.00	1.3387E+002		-4.3121E+001
		662.42*	0.00	8.8579E+001		1.3776E+002
		722.70	0.00	4.4988E+002		-1.0691E+002
	PU-241	114.00	0.02	8.4410E+000	8.44E+000	2.7544E+000
		332.60	0.00	2.2479E+001		-9.9294E+000
	CM-243	209.70	3.27	2.4732E-002	4.70E-003	2.5566E-002
		228.18	10.56	7.0535E-003		-2.8445E-003
		277.60	14.00	4.7040E-003		-1.8437E-003

+ = Nuclide identified during the nuclide identification
* = Energy line found in the spectrum
> = MDA value not calculated
@ = Half-life too short to be able to perform the decay correction

N U C L I D E T O T A L S

Nuclide	Mass (g)
Pu-239	2.26E-003 +/- 8.52E-004

Bldg 233s
NDA Item Description Sheet
Box Geometry

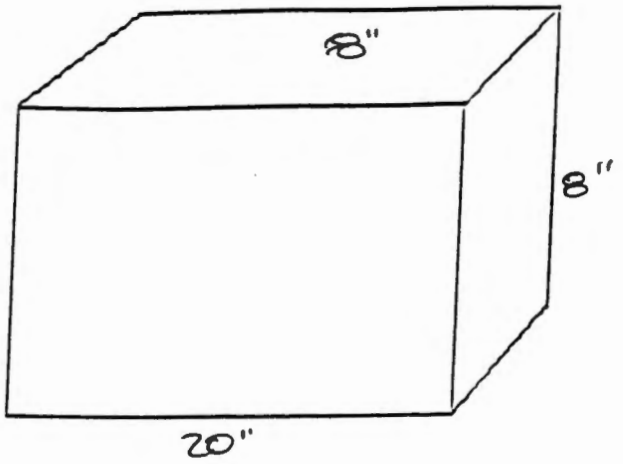

Put Dimensions on Box

1.-10952

Item ID: 1763

Weight (kg): 69 LBS 31.36kg

Material Description: FLOW MATRIX

Packaging: 3 layer

Detector Distance (in): 24

Detector Filters: None

Dose Rate: <.5

Comments: A 900 1247
B 1800 1248

233-S Item Analysis

Spreadsheet Version 3.0b

1/14/02

Sample Info:

Item ID: 1763

File Name: 1248

Assay Date: 20-Feb-02

File Name:

Data Input:

Isotope	Activity (uCi/kg)	Meas Uncert	Activity (uCi/kg)	Meas Uncert
Pu-239 (129)	1.78E+01	5.16E+00		
Pu-239 (414)				
Am-241	7.30E+00	6.18E-01		
Np-237				
U-238				
U-235				
Cs-137	3.88E-04	7.42E-05		
Co-60				

Item Parameters:

Contamination: Internal

Item Type: Box

Calcs: Use 1st

Dimensions:

Length (in): 20

Width (in): 8

Depth (in): 8

Weight (lbs): 80

Depth for TMU (in): 4

% Volume: 100

Am-241 Calcs:

Measured	7.30E+00	+/-	2.98E+00	Use Meas
Calculated	2.46E+01	+/-	2.27E+01	

Nuclide Activities:

Isotope	Activity (nCi/g)		Total Unc 1 sigma
Pu-238	7.21E+00	+/-	2.54E+00
Pu-239	1.78E+01	+/-	6.28E+00
Pu-240	9.27E+00	+/-	3.27E+00
Pu-241	3.47E+01	+/-	1.22E+01
Pu-242	9.37E-03	+/-	3.30E-03
Am-241	7.30E+00	+/-	2.98E+00
Np-237	0.00E+00	+/-	0.00E+00
U-238	0.00E+00	+/-	0.00E+00
U-235	0.00E+00	+/-	0.00E+00
Cs-137	3.88E-04	+/-	8.37E-05
Co-60	0.00E+00	+/-	0.00E+00

Results:

Total TRU Activity(nCi/g):	4.16E+01	+/-	8.09E+00	Calc from Pu-239 Act
Pu (g):	1.21E-02	**Pu (g) + 3 sigma TMU:**	2.48E-02	
		Pu(g) + 3 sigma:	2.25E-02	

Comments:

Density error is due to geometry

Errors:Density > 1,

Analyst: Martin Winterrose

Date: 2/20/02

```
#Date & Time: Wed Feb 20 08:29:35 2002
~g=SIMPLE_BOX
~description=1763_FLOWMETER
~comment=FLOWMETER
~Ccollimator=50MM-180D
~crpn=4
~Detector=7219
~Convergence in %=1            ~MDRPN=4
~Lunit=IN  ~Tunit=C  ~Dunit=G/CU.C    ~Punit=MM.HG
~at=20        ~ap=760       ~rh=50
~Energies kev=   50.000,  100.000,  128.000,  130.000,  150.000,  200.000,#
                300.000,  500.000,  700.000, 1000.000, 1400.000, 2000.000,#
               4000.000,
~Error in %=     10.000,   10.000,   10.000,   10.000,   10.000,    8.000,#
                  8.000,    6.000,    6.000,    4.000,    4.000,    4.000,#
                  4.000,
~d1.1=0.0132    ~d1.2=20        ~d1.3=8         ~d1.4=8         ~1mater=LPOLYETH ~1den=0.92
~d3.1=7.95      ~3mater=304SS    ~3den=1.4952    ~3con=1
~sd1=24
```

C A N B E R R A I S O C S A N A L Y S I S

Report Generated On : 2/20/02 9:48:10 AM

Sample Title : 1763 Side B
Spectrum Description :
Sample Identification : 1248
Sample Size : 36.6 kg

Sample Taken On : 2/20/02 9:10:00 AM
Acquisition Started : 2/20/02 9:10:42 AM

Live Time: 1800.0 seconds Real Time: 1804.3 seconds

ISOCS Calabration : 1763 FLOWMETE
Energy Calibration Used Done On : 2/27/01
Efficiency Calibration Used Done On : 2/20/02

P E A K A N A L Y S I S R E P O R T

Peak No.	Peak centroid	Energy (keV)	Net Peak Area	Net Area Uncert.	Continuum Counts
1	239.25	59.90	6.61E+004	1934.95	2.25E+003
2	339.92	85.06	6.97E+002	58.92	2.15E+003
3	350.93	87.81	2.12E+002	52.14	2.18E+003
4	395.91	99.05	1.88E+002	47.20	2.20E+003
5	414.56	103.71	1.53E+002	47.12	2.18E+003
6	517.60	129.46	1.78E+002	41.81	1.97E+003
7	2045.21	511.24	9.71E+001	13.69	5.99E+001
8	2438.19	609.45	9.82E+001	12.17	4.38E+001
9	2647.95	661.88	5.15E+001	9.73	3.50E+001
10	7063.45	1765.39	4.10E+001	7.43	2.04E+000

NUCLIDE IDENTIFICATION REPORT

Nuclide Name	Id Confidence	Energy (keV)	Yield (%)	Activity (uCi)	Activity Uncertainty
CS-137	0.998	661.65*	85.12	3.87784E-004	7.42124E-005
Pu-239	0.415	129.28*	0.01	1.78324E+001	5.15666E+000
		375.00	0.00		
		413.70	0.00		
		451.50 @	0.00		
AM-241	0.994	59.54*	35.70	7.29634E+000	6.17805E-001
		125.28	0.00		
		335.40	0.00		
		662.42* @	0.00	9.16894E+001	1.75454E+001
		722.70	0.00		

INTERFERENCE CORRECTED REPORT

Nuclide Name	Nuclide Id Confidence	Wt mean Activity (uCi/kg)	Wt mean Activity Uncertainty
CS-137	0.998	3.569256E-004	7.425098E-005
Pu-239 @	0.415	1.783241E+001	5.156662E+000
AM-241 @	0.994	7.296338E+000	6.178048E-001

? = nuclide is part of an undetermined solution
X = nuclide rejected by the interference analysis
@ = nuclide contains energy lines not used in Weighted Mean Activity

Errors quoted at 1.000 sigma

****
***** N U C L I D E M D A R E P O R T *****
****

	Nuclide Name	Energy (keV)	Yield (%)	Line MDA (uCi/kg)	Nuclide MDA (uCi/kg)	Activity (uCi/kg)
	CO-60	1173.22	100.00	4.0731E-004	3.02E-004	1.0795E-004
		1332.49	100.00	3.0187E-004		-2.2848E-005
	CS-134	475.35	1.46	2.7023E-002	4.33E-004	-5.2789E-003
		563.23	8.38	4.6810E-003		-2.1620E-003
		569.32	15.43	2.5191E-003		-9.3665E-004
		604.70	97.60	4.7345E-004		1.4561E-004
		795.84	85.40	4.3338E-004		1.9775E-004
		801.93	8.73	4.2355E-003		-7.8892E-005
		1038.57	1.00	3.3165E-002		-1.5522E-002
		1167.94	1.80	2.0798E-002		-1.2578E-002
		1365.15	3.04	9.8432E-003		2.5926E-003
+	CS-137	661.65*	85.12	2.2740E-004	2.27E-004	3.8778E-004
	NP-237	300.17	6.20	8.1554E-003	1.34E-003	6.7898E-003
		312.00	36.00	1.3362E-003		1.0035E-003
		340.60	4.20	1.1134E-002		9.2046E-003
		375.00	0.68	5.9928E-002		1.1420E-002
		415.60	1.75	2.4217E-002		-1.3223E-002
+	Pu-239	129.28*	0.01	2.0985E+001	2.10E+001	1.7832E+001
		375.00	0.00	2.5754E+001		4.9075E+000
		413.70	0.00	2.8291E+001		1.1758E+001
		451.50	0.00	2.1169E+002		-3.5098E+001
+	AM-241	59.54*	35.70	2.4624E-002	2.46E-002	7.2963E+000
		125.28	0.00	5.8944E+001		3.0153E+001
		335.40	0.00	9.5528E+001		8.9371E+000
		662.42*	0.00	5.3768E+001		9.1689E+001
		722.70	0.00	3.0368E+002		3.0182E+002
	PU-241	114.00	0.02	1.2055E+001	1.21E+001	5.6545E+000
		332.60	0.00	1.6088E+001		-8.3251E+000
	CM-243	209.70	3.27	2.1104E-002	3.65E-003	7.8550E-004
		228.18	10.56	5.8363E-003		8.8608E-004
		277.60	14.00	3.6498E-003		7.1228E-004

+ = Nuclide identified during the nuclide identification
* = Energy line found in the spectrum
> = MDA value not calculated
@ = Half-life too short to be able to perform the decay correction

N U C L I D E T O T A L S

Nuclide	Mass (g)
Pu-239	1.05E-002 +/- 3.05E-003

Bldg 233s
NDA Item Description Sheet
Box Geometry

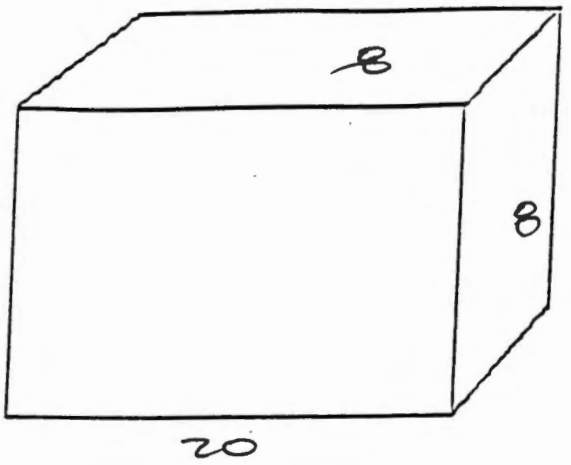

Put Dimensions on Box

Item ID: 1762

Weight (kg): 80 lbs

Material Description: FLOW METER

Packaging: Blankets

Detector Distance (in): 24"

Detector Filters: None

Dose Rate: <.5

Comments: A 900 1249
B 1800 1250

233-S Item Analysis

Spreadsheet Version 3.0b

1/14/02

Sample Info:

Item ID: 1762

File Name: 1250

Assay Date: 20-Feb-02

File Name:

Data Input:

Isotope	Activity (uCi/kg)	Meas Uncert	Activity (uCi/kg)	Meas Uncert
Pu-239 (129)	2.94E+01	6.79E+00		
Pu-239 (414)				
Am-241	1.24E+01	1.05E+00		
Np-237				
U-238				
U-235				
Cs-137	3.54E-04	7.64E-05		
Co-60				

Item Parameters:

Contamination: Internal

Item Type: Box

Calcs: Use 1st

Dimensions:

Length (in): 20

Width (in): 8

Depth (in): 8

Weight (lbs): 80

Depth for TMU (in): 4

% Volume: 100

Am-241 Calcs:

Measured	1.24E+01	+/-	5.06E+00	Use Meas
Calculated	4.07E+01	+/-	3.31E+01	

Nuclide Activities:

Isotope	Activity (nCi/g)		Total Unc 1 sigma
Pu-238	1.19E+01	+/-	3.65E+00
Pu-239	2.94E+01	+/-	9.00E+00
Pu-240	1.53E+01	+/-	4.69E+00
Pu-241	5.72E+01	+/-	1.75E+01
Pu-242	1.55E-02	+/-	4.74E-03
Am-241	1.24E+01	+/-	5.06E+00
Np-237	0.00E+00	+/-	0.00E+00
U-238	0.00E+00	+/-	0.00E+00
U-235	0.00E+00	+/-	0.00E+00
Cs-137	3.54E-04	+/-	8.42E-05
Co-60	0.00E+00	+/-	0.00E+00

Results:

Total TRU Activity(nCi/g):	6.90E+01	+/-	1.19E+01	Calc from Pu-239 Act
Pu (g):	1.99E-02	**Pu (g) + 3 sigma TMU:**	3.82E-02	
		Pu(g) + 3 sigma:	3.37E-02	

Comments:

Density error is due to geometry

Errors:Density > 1,

Analyst: Martin Winterrose

Date: 2/20/02

```
#Date & Time: Wed Feb 20 09:45:38 2002
~g=SIMPLE_BOX
~description=1762_FLOWMETER
~comment=FLOWMETER
~Ccollimator=50MM-180D
~crpn=4
~Detector=7219
~Convergence in %=1            ~MDRPN=4
~Lunit=IN  ~Tunit=C  ~Dunit=G/CU.C    ~Punit=MM.HG
~at=20        ~ap=760       ~rh=50
~Energies kev=   50.000,  100.000,  128.000,  130.000,  150.000,  200.000,#
                300.000,  500.000,  700.000, 1000.000, 1400.000, 2000.000,#
               4000.000,
~Error in %=     10.000,   10.000,   10.000,   10.000,   10.000,    8.000,#
                  8.000,    6.000,    6.000,    4.000,    4.000,    4.000,#
                  4.000,
~d1.1=0.0132    ~d1.2=20        ~d1.3=8         ~d1.4=8         ~1mater=LPOLYETH ~1den=0.92
~d3.1=7.95      ~3mater=304SS    ~3den=1.4952    ~3con=1
~sd1=24
```

C A N B E R R A I S O C S A N A L Y S I S

Report Generated On : 2/20/02 10:20:19 AM

Sample Title : 1762 Side B
Spectrum Description :
Sample Identification : 1250
Sample Size : 36.6 kg

Sample Taken On : 2/20/02 10:04:00 AM
Acquisition Started : 2/20/02 10:05:11 AM

Live Time: 1800.0 seconds Real Time: 1805.8 seconds

ISOCS Calabration : 1762 FLOWMETE
Energy Calibration Used Done On : 2/27/01
Efficiency Calibration Used Done On : 2/20/02

P E A K A N A L Y S I S R E P O R T

Peak No.	Peak centroid	Energy (keV)	Net Peak Area	Net Area Uncert.	Continuum Counts
1	239.24	59.89	1.12E+005	3405.31	2.45E+003
2	340.48	85.20	7.56E+002	54.61	2.20E+003
3	349.79	87.52	2.66E+002	53.47	2.22E+003
4	396.08	99.09	3.75E+002	48.85	2.23E+003
5	517.97	129.55	2.93E+002	46.54	1.96E+003
6	1499.98	374.98	3.62E+001	11.27	9.79E+001
7	2044.48	511.06	1.19E+002	14.04	5.70E+001
8	2333.25	583.23	6.59E+001	10.83	4.39E+001
9	2437.98	609.40	1.03E+002	12.39	4.47E+001
10	2648.49	662.01	4.70E+001	10.04	4.05E+001
11	3645.86	911.27	6.42E+001	9.96	2.54E+001
12	4482.59	1120.39	4.42E+001	8.63	1.52E+001
13	7063.60	1765.43	3.66E+001	7.25	1.06E+000

NUCLIDE IDENTIFICATION REPORT

Nuclide Name	Id Confidence	Energy (keV)	Yield (%)	Activity (uCi)	Activity Uncertainty
CS-137	0.995	661.65*	85.12	3.53630E-004	7.63865E-005
Pu-239	0.698	129.28*	0.01	2.93854E+001	6.79388E+000
		375.00*	0.00	1.18780E+001	3.80421E+000
		413.70	0.00		
		451.50 @	0.00		
AM-241	0.994	59.54*	35.70	1.23811E+001	1.05312E+000
		125.28	0.00		
		335.40	0.00		
		662.42* @	0.00	8.36139E+001	1.80598E+001
		722.70	0.00		

INTERFERENCE CORRECTED REPORT

Nuclide Name	Nuclide Id Confidence	Wt mean Activity (uCi/kg)	Wt mean Activity Uncertainty
CS-137	0.995	3.012665E-004	7.651032E-005
Pu-239 @	0.698	1.605698E+001	3.319273E+000
AM-241 @	0.994	1.238110E+001	1.053119E+000

? = nuclide is part of an undetermined solution
X = nuclide rejected by the interference analysis
@ = nuclide contains energy lines not used in Weighted Mean Activity

Errors quoted at 1.000 sigma

****
***** N U C L I D E M D A R E P O R T *****
****

	Nuclide Name	Energy (keV)	Yield (%)	Line MDA (uCi/kg)	Nuclide MDA (uCi/kg)	Activity (uCi/kg)
	CO-60	1173.22	100.00	3.8676E-004	2.90E-004	7.9698E-005
		1332.49	100.00	2.9048E-004		1.3141E-004
	CS-134	475.35	1.46	2.5949E-002	4.01E-004	-1.0234E-002
		563.23	8.38	4.5169E-003		1.0932E-003
		569.32	15.43	2.4776E-003		3.6314E-004
		604.70	97.60	4.6867E-004		6.5833E-005
		795.84	85.40	4.0126E-004		-1.5699E-004
		801.93	8.73	3.8821E-003		5.6078E-004
		1038.57	1.00	3.5339E-002		1.3341E-002
		1167.94	1.80	2.1973E-002		6.2192E-003
		1365.15	3.04	1.0030E-002		-7.3948E-003
+	CS-137	661.65*	85.12	2.4307E-004	2.43E-004	3.5363E-004
	NP-237	300.17	6.20	8.3968E-003	1.37E-003	-5.2935E-003
		312.00	36.00	1.3731E-003		-5.6665E-005
		340.60	4.20	1.1460E-002		4.1852E-003
		375.00	0.68	6.5729E-002		-2.8195E-002
		415.60	1.75	2.5326E-002		2.8040E-002
+	Pu-239	129.28*	0.01	2.0963E+001	1.60E+001	2.9385E+001
		375.00*	0.00	1.5975E+001		1.1878E+001
		413.70	0.00	2.9790E+001		1.4837E+001
		451.50	0.00	2.0525E+002		6.3408E+001
+	AM-241	59.54*	35.70	2.5697E-002	2.57E-002	1.2381E+001
		125.28	0.00	5.8446E+001		-2.2598E+001
		335.40	0.00	9.5767E+001		3.3160E+001
		662.42*	0.00	5.7474E+001		8.3614E+001
		722.70	0.00	2.9075E+002		4.6254E+001
	PU-241	114.00	0.02	1.2159E+001	1.22E+001	1.5145E+001
		332.60	0.00	1.5625E+001		-1.6356E+001
	CM-243	209.70	3.27	2.1205E-002	3.65E-003	6.2075E-004
		228.18	10.56	5.7744E-003		-8.1245E-004
		277.60	14.00	3.6462E-003		2.1902E-003

+ = Nuclide identified during the nuclide identification
* = Energy line found in the spectrum
> = MDA value not calculated
@ = Half-life too short to be able to perform the decay correction

N U C L I D E T O T A L S

Nuclide	Mass (g)
Pu-239	9.49E-003 +/- 1.96E-003

Bldg 233-S
NDA Item Description Sheet
~~Pipe~~ Box Geometry

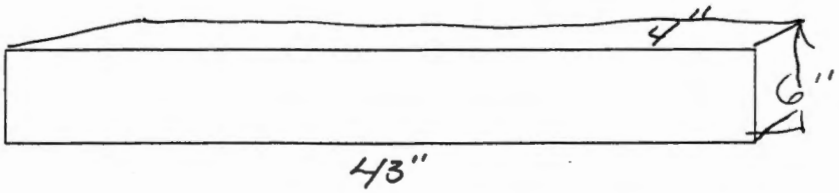

1.317

Put Dimensions on Pipe

Item ID: 16,294 WD

Weight (kg): 49 Lbs

Material Description: C CHANNEL

Packaging: 3 + PADDING

Detector Distance (in): 43"

Detector Filters: NONE

Dose Rate: <.6

Comments: A 1800 Sec 1251

233-S Item Analysis

Spreadsheet Version 3.0b

1/14/02

Sample Info:

Item ID:	1624	**Assay Date:**	20-Feb-02
File Name:	1251	**File Name:**	1252

Data Input:

Isotope	Activity (uCi/kg)	Meas Uncert	Activity (uCi/kg)	Meas Uncert
Pu-239 (129)	7.76E+01		7.67E+01	
Pu-239 (414)				
Am-241	1.25E+00	1.04E-01	1.61E+00	1.33E-01
Np-237				
U-238				
U-235				
Cs-137	1.61E-03	2.56E-04	1.69E-03	2.61E-04
Co-60				

Item Parameters:

Contamination: Internal | Item Type: Box | Calcs: Average

Dimensions:

Length (in):	43	Width (in):	6	Depth (in):	4
Weight (lbs):	49	Depth for TMU (in):	4	% Volume:	100

Am-241 Calcs:

Measured	1.43E+00	+/-	5.77E-01	Use Meas
Calculated	1.07E+02	+/-	6.20E+01	

Nuclide Activities:

Isotope	Activity (nCi/g)		Total Unc 1 sigma
Pu-238	3.13E+01	+/-	6.28E+00
Pu-239	7.72E+01	+/-	1.55E+01
Pu-240	4.02E+01	+/-	8.08E+00
Pu-241	1.50E+02	+/-	3.02E+01
Pu-242	4.06E-02	+/-	8.16E-03
Am-241	1.43E+00	+/-	5.77E-01
Np-237	0.00E+00	+/-	0.00E+00
U-238	0.00E+00	+/-	0.00E+00
U-235	0.00E+00	+/-	0.00E+00
Cs-137	1.65E-03	+/-	2.46E-04
Co-60	0.00E+00	+/-	0.00E+00

Results:

Total TRU Activity(nCi/g):		1.50E+02	+/-	1.86E+01	Calc from Pu-239 MDA
Pu (g):	3.20E-02	**Pu (g) + 3 sigma TMU:**		5.13E-02	
		Pu(g) + 3 sigma:		3.20E-02	

Comments:

Density error is due to geometry and matrix density,

Errors:Density > 1,

Analyst: Martin Winterrose

Date: 2/22/02

```
#Date & Time: Fri Feb 22 12:51:52 2002
~g=SIMPLE_BOX
~description=1624_HOLD_DOWN
~comment=HOLD_DOWN
~Ccollimator=50MM-180D
~crpn=4
~Detector=7219
~Convergence in %=1            ~MDRPN=4
~Lunit=IN  ~Tunit=C  ~Dunit=G/CU.C    ~Punit=MM.HG
~at=20        ~ap=760       ~rh=50
~Energies kev=   50.000,  100.000,  128.000,  130.000,  150.000,  200.000,#
                300.000,  500.000,  700.000, 1000.000, 1400.000, 2000.000,#
               4000.000,
~Error in %=     10.000,   10.000,   10.000,   10.000,   10.000,    8.000,#
                  8.000,    6.000,    6.000,    4.000,    4.000,    4.000,#
                  4.000,
~d1.1=0.0132    ~d1.2=43        ~d1.3=6         ~d1.4=4         ~1mater=LPOLYET
~d3.1=5.95      ~3mater=SAMPLEHS ~3den=1.317     ~3con=1
~sd1=43
```

C A N B E R R A I S O C S A N A L Y S I S

Report Generated On : 2/22/02 12:55:27 PM

Sample Title : 1624 Side A
Spectrum Description :
Sample Identification : 1251
Sample Size : 22.3 kg

Sample Taken On : 2/20/02 11:16:00 AM
Acquisition Started : 2/20/02 11:16:58 AM

Live Time: 1800.0 seconds Real Time: 1802.5 seconds

ISOCS Calabration : 1624 HOLD_DOW
Energy Calibration Used Done On : 2/27/01
Efficiency Calibration Used Done On : 2/22/02

P E A K A N A L Y S I S R E P O R T

Peak No.	Peak centroid	Energy (keV)	Net Peak Area	Net Area Uncert.	Continuum Counts
1	239.23	59.89	6.64E+003	162.03	2.01E+003
2	340.26	85.14	8.73E+002	57.48	2.41E+003
3	350.29	87.65	3.15E+002	51.60	2.43E+003
4	2043.44	510.80	1.29E+002	15.55	6.00E+001
5	2437.64	609.32	1.01E+002	12.44	4.14E+001
6	2647.60	661.79	7.12E+001	11.10	3.85E+001
7	7064.52	1765.66	3.15E+001	6.71	1.19E+000

N U C L I D E I D E N T I F I C A T I O N R E P O R T

Nuclide Name	Id Confidence	Energy (keV)	Yield (%)	Activity (uCi)	Activity Uncertainty
CS-137	0.999	661.65*	85.12	1.61129E-003	2.56388E-004
AM-241	0.995	59.54*	35.70	1.25277E+000	1.04135E-001
		125.28	0.00		
		335.40	0.00		
		662.42* @	0.00	3.80981E+002	6.06128E+001
		722.70	0.00		

I N T E R F E R E N C E C O R R E C T E D R E P O R T

Nuclide Name	Nuclide Id Confidence	Wt mean Activity (uCi/kg)	Wt mean Activity Uncertainty
CS-137	0.999	1.605992E-003	2.563514E-004
AM-241 @	0.995	1.252772E+000	1.041352E-001

? = nuclide is part of an undetermined solution
X = nuclide rejected by the interference analysis
@ = nuclide contains energy lines not used in Weighted Mean Activity

Errors quoted at 1.000 sigma

****
***** N U C L I D E M D A R E P O R T *****
****

	Nuclide Name	Energy (keV)	Yield (%)	Line MDA (uCi/kg)	Nuclide MDA (uCi/kg)	Activity (uCi/kg)
	CO-60	1173.22	100.00	1.1768E-003	1.02E-003	2.3571E-004
		1332.49	100.00	1.0230E-003		3.0420E-004
	CS-134	475.35	1.46	7.7662E-002	1.35E-003	3.2237E-002
		563.23	8.38	1.3531E-002		-4.6364E-003
		569.32	15.43	7.6309E-003		-6.6233E-003
		604.70	97.60	1.4624E-003		-2.9709E-004
		795.84	85.40	1.3452E-003		5.4028E-004
		801.93	8.73	1.2150E-002		-1.4376E-002
		1038.57	1.00	1.1560E-001		8.8102E-002
		1167.94	1.80	6.4892E-002		2.2168E-002
		1365.15	3.04	2.9907E-002		-5.6222E-002
+	CS-137	661.65*	85.12	7.1465E-004	7.15E-004	1.6113E-003
	NP-237	300.17	6.20	2.1737E-002	3.56E-003	-6.1018E-003
		312.00	36.00	3.5621E-003		-9.8521E-004
		340.60	4.20	3.1309E-002		2.0650E-002
		375.00	0.68	1.8057E-001		-3.2207E-003
		415.60	1.75	7.1422E-002		-2.0512E-002
	Pu-239	129.28	0.01	8.0034E+001	7.76E+001	3.7104E+001
		375.00	0.00	7.7598E+001		-1.3841E+000
		413.70	0.00	8.3599E+001		1.9251E+001
		451.50	0.00	6.3223E+002		2.4089E+002
+	AM-241	59.54*	35.70	3.9899E-002	3.99E-002	1.2528E+000
		125.28	0.00	1.3058E+002		-4.1102E+001
		335.40	0.00	2.6220E+002		5.1018E+001
		662.42*	0.00	1.6898E+002		3.8098E+002
		722.70	0.00	8.7822E+002		8.0953E+002
	PU-241	114.00	0.02	2.5947E+001	2.59E+001	-2.3798E+000
		332.60	0.00	4.4256E+001		-3.7172E+001
	CM-243	209.70	3.27	5.1062E-002	9.75E-003	4.7054E-004
		228.18	10.56	1.5279E-002		1.4723E-002
		277.60	14.00	9.7498E-003		-4.3547E-003

+ = Nuclide identified during the nuclide identification
* = Energy line found in the spectrum
> = MDA value not calculated
@ = Half-life too short to be able to perform the decay correction

N U C L I D E T O T A L S

Nuclide	Mass (g)

C A N B E R R A I S O C S A N A L Y S I S

Report Generated On : 2/22/02 12:54:00 PM

Sample Title : 1624 Side B
Spectrum Description :
Sample Identification : 1252
Sample Size : 22.3 kg

Sample Taken On : 2/20/02 12:04:00 PM
Acquisition Started : 2/20/02 12:05:07 PM

Live Time: 1800.0 seconds Real Time: 1802.6 seconds

ISOCS Calabration : 1624 HOLD_DOW
Energy Calibration Used Done On : 2/27/01
Efficiency Calibration Used Done On : 2/22/02

P E A K A N A L Y S I S R E P O R T

Peak No.	Peak centroid	Energy (keV)	Net Peak Area	Net Area Uncert.	Continuum Counts
1	239.31	59.91	8.53E+003	195.24	1.94E+003
2	340.20	85.13	8.53E+002	57.11	2.37E+003
3	351.15	87.86	1.84E+002	50.67	2.39E+003
4	2044.81	511.14	1.37E+002	14.18	5.82E+001
5	2437.64	609.32	8.68E+001	11.67	4.50E+001
6	2647.16	661.68	7.47E+001	11.28	4.00E+001
7	3645.93	911.29	5.87E+001	9.52	2.40E+001
8	7064.19	1765.58	5.10E+001	8.30	2.85E+000

N U C L I D E I D E N T I F I C A T I O N R E P O R T

Nuclide Name	Id Confidence	Energy (keV)	Yield (%)	Activity (uCi)	Activity Uncertainty
CS-137	1.000	661.65*	85.12	1.68973E-003	2.60735E-004
AM-241	0.994	59.54*	35.70	1.60647E+000	1.32840E-001
		125.28	0.00		
		335.40	0.00		
		662.42* @	0.00	3.99526E+002	6.16399E+001
		722.70	0.00		

I N T E R F E R E N C E C O R R E C T E D R E P O R T

Nuclide Name	Nuclide Id Confidence	Wt mean Activity (uCi/kg)	Wt mean Activity Uncertainty
CS-137	1.000	1.682931E-003	2.606956E-004
AM-241 @	0.994	1.606470E+000	1.328403E-001

? = nuclide is part of an undetermined solution
X = nuclide rejected by the interference analysis
@ = nuclide contains energy lines not used in Weighted Mean Activity

Errors quoted at 1.000 sigma

****
***** N U C L I D E M D A R E P O R T *****
****

	Nuclide Name	Energy (keV)	Yield (%)	Line MDA (uCi/kg)	Nuclide MDA (uCi/kg)	Activity (uCi/kg)
	CO-60	1173.22	100.00	1.0985E-003	1.03E-003	1.4749E-004
		1332.49	100.00	1.0313E-003		-2.9931E-004
	CS-134	475.35	1.46	8.0870E-002	1.27E-003	2.6952E-003
		563.23	8.38	1.3755E-002		6.9031E-003
		569.32	15.43	7.2218E-003		6.6929E-004
		604.70	97.60	1.4432E-003		-6.8564E-004
		795.84	85.40	1.2654E-003		-5.9499E-004
		801.93	8.73	1.2900E-002		-3.5579E-003
		1038.57	1.00	1.0292E-001		-8.9975E-002
		1167.94	1.80	6.0143E-002		-6.9139E-003
		1365.15	3.04	3.4065E-002		3.3054E-003
+	CS-137	661.65*	85.12	7.2757E-004	7.28E-004	1.6897E-003
	NP-237	300.17	6.20	2.2760E-002	3.64E-003	-6.3803E-003
		312.00	36.00	3.6439E-003		1.5770E-003
		340.60	4.20	3.0025E-002		1.6761E-002
		375.00	0.68	1.7856E-001		-8.5313E-002
		415.60	1.75	6.9958E-002		1.2974E-002
	Pu-239	129.28	0.01	7.8172E+001	7.67E+001	-7.6705E+001
		375.00	0.00	7.6734E+001		-3.6663E+001
		413.70	0.00	7.9810E+001		1.5119E+001
		451.50	0.00	6.4102E+002		2.8762E+002
+	AM-241	59.54*	35.70	3.9097E-002	3.91E-002	1.6065E+000
		125.28	0.00	1.2955E+002		-2.9091E+001
		335.40	0.00	2.5060E+002		1.1263E+002
		662.42*	0.00	1.7203E+002		3.9953E+002
		722.70	0.00	9.1460E+002		8.9344E+002
	PU-241	114.00	0.02	2.6089E+001	2.61E+001	3.4270E+001
		332.60	0.00	4.1954E+001		-1.8826E+001
	CM-243	209.70	3.27	5.4511E-002	9.94E-003	5.8803E-002
		228.18	10.56	1.5008E-002		-4.6208E-003
		277.60	14.00	9.9399E-003		-3.2003E-003

+ = Nuclide identified during the nuclide identification
* = Energy line found in the spectrum
> = MDA value not calculated
@ = Half-life too short to be able to perform the decay correction

N U C L I D E T O T A L S

Nuclide	Mass (g)

Bldg 233-S
NDA Item Description Sheet
~~Pipe~~ Geometry
Box

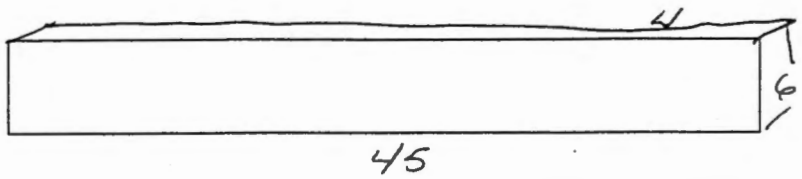

Put Dimensions on Pipe

Item ID: 1700

1.1814

Weight (kg): 46

Material Description: Hold Down

Packaging: 3 Layer

Detector Distance (in): 45"

Detector Filters: None

Dose Rate: <.5

Comments: A 1800 1753
B 1800 1754

233-S Item Analysis

Spreadsheet Version 3.0b

1/14/02

Sample Info:

Item ID:	1700	**Assay Date:**	20-Feb-02
File Name:	1253	**File Name:**	1252

Data Input:

Isotope	Activity (uCi/kg)	Meas Uncert	Activity (uCi/kg)	Meas Uncert
Pu-239 (129)	8.37E+01		8.37E+01	
Pu-239 (414)				
Am-241	6.22E-02		6.24E-02	
Np-237				
U-238				
U-235				
Cs-137	1.86E-03	2.92E+04	2.09E-03	3.00E-04
Co-60				

Item Parameters:

Contamination:	Internal	Item Type:	Box	Calcs:	Average

Dimensions:

Length (in):	45	Width (in):	6	Depth (in):	4
Weight (lbs):	46	Depth for TMU (in):	4	% Volume:	100

Am-241 Calcs:

Measured	6.23E-02	+/-	2.49E-02	Calc from Pu-239
Calculated	1.16E+02	+/-	6.73E+01	

Nuclide Activities:

Isotope	Activity (nCi/g)		Total Unc 1 sigma
Pu-238	3.39E+01	+/-	6.82E+00
Pu-239	8.37E+01	+/-	1.68E+01
Pu-240	4.36E+01	+/-	8.77E+00
Pu-241	1.63E+02	+/-	3.28E+01
Pu-242	4.41E-02	+/-	8.85E-03
Am-241	1.16E+02	+/-	6.73E+01
Np-237	0.00E+00	+/-	0.00E+00
U-238	0.00E+00	+/-	0.00E+00
U-235	0.00E+00	+/-	0.00E+00
Cs-137	1.97E-03	+/-	1.46E+04
Co-60	0.00E+00	+/-	0.00E+00

Results:

Total TRU Activity(nCi/g):		2.77E+02	+/-	7.02E+01	Calc from Pu-239 MDA
Pu (g):	3.26E-02	**Pu (g) + 3 sigma TMU:**		5.22E-02	
		Pu(g) + 3 sigma:		3.26E-02	

Comments:

Density error is due to geometry Values calc from Pu MDA for TRU.	Errors:Density > 1,

Analyst: Martin Winterrose **Date:** 2/22/02

```
#Date & Time: Fri Feb 22 13:31:57 2002
~g=SIMPLE_BOX
~description=1700_HOLD_DOWN
~comment=HOLD_DOWN
~Ccollimator=50MM-180D
~crpn=4
~Detector=7219
~Convergence in %=1            ~MDRPN=4
~Lunit=IN  ~Tunit=C  ~Dunit=G/CU.C    ~Punit=MM.HG
~at=20        ~ap=760       ~rh=50
~Energies kev=   50.000,  100.000,  128.000,  130.000,  150.000,  200.000,#
                300.000,  500.000,  700.000, 1000.000, 1400.000, 2000.000,#
               4000.000,
~Error in %=     10.000,   10.000,   10.000,   10.000,   10.000,    8.000,#
                  8.000,    6.000,    6.000,    4.000,    4.000,    4.000,#
                  4.000,
~d1.1=0.0132    ~d1.2=45        ~d1.3=6         ~d1.4=4         ~1mater=LPOLYET
~d3.1=5.95      ~3mater=SAMPLEHS ~3den=1.1814    ~3con=1
~sd1=45
```

C A N B E R R A I S O C S A N A L Y S I S

Report Generated On : 2/22/02 1:33:07 PM

Sample Title : 1700 Side A
Spectrum Description :
Sample Identification : 1253
Sample Size : 20.9 kg

Sample Taken On : 2/20/02 12:56:00 PM
Acquisition Started : 2/20/02 12:56:53 PM

Live Time: 1800.0 seconds Real Time: 1802.3 seconds

ISOCS Calabration : 1700 HOLD_DOW
Energy Calibration Used Done On : 2/27/01
Efficiency Calibration Used Done On : 2/22/02

P E A K A N A L Y S I S R E P O R T

Peak No.	Peak centroid	Energy (keV)	Net Peak Area	Net Area Uncert.	Continuum Counts
1	340.43	85.19	8.45E+002	57.70	2.37E+003
2	350.53	87.71	2.37E+002	54.99	2.39E+003
3	955.19	238.82	1.04E+002	18.31	2.43E+002
4	2043.90	510.91	1.18E+002	13.82	6.39E+001
5	2438.09	609.43	7.06E+001	10.59	4.21E+001
6	2647.71	661.82	7.39E+001	11.35	4.51E+001
7	3646.00	911.31	5.23E+001	8.91	2.00E+001
8	7065.06	1765.80	2.70E+001	6.61	3.75E-001

N U C L I D E I D E N T I F I C A T I O N R E P O R T

Nuclide Name	Id Confidence	Energy (keV)	Yield (%)	Activity (uCi)	Activity Uncertainty
CS-137	0.999	661.65*	85.12	1.86271E-003	2.91883E-004

I N T E R F E R E N C E C O R R E C T E D R E P O R T

Nuclide Name	Nuclide Id Confidence	Wt mean Activity (uCi/kg)	Wt mean Activity Uncertainty
CS-137	0.999	1.862712E-003	2.918827E-004

? = nuclide is part of an undetermined solution
X = nuclide rejected by the interference analysis
@ = nuclide contains energy lines not used in Weighted Mean Activity

Errors quoted at 1.000 sigma

****
***** N U C L I D E M D A R E P O R T *****
****

	Nuclide Name	Energy (keV)	Yield (%)	Line MDA (uCi/kg)	Nuclide MDA (uCi/kg)	Activity (uCi/kg)
	CO-60	1173.22	100.00	1.3407E-003	1.18E-003	-9.3960E-004
		1332.49	100.00	1.1769E-003		3.7992E-004
	CS-134	475.35	1.46	8.9198E-002	1.42E-003	6.9689E-003
		563.23	8.38	1.4986E-002		-5.0244E-003
		569.32	15.43	7.9044E-003		2.3510E-003
		604.70	97.60	1.5382E-003		-3.4775E-004
		795.84	85.40	1.4179E-003		-4.8366E-004
		801.93	8.73	1.3923E-002		-1.1876E-002
		1038.57	1.00	1.2620E-001		5.8166E-002
		1167.94	1.80	7.1972E-002		-1.0351E-003
		1365.15	3.04	3.3966E-002		-1.0797E-002
+	CS-137	661.65*	85.12	8.5572E-004	8.56E-004	1.8627E-003
	NP-237	300.17	6.20	2.4202E-002	4.01E-003	8.0501E-003
		312.00	36.00	4.0098E-003		4.8810E-004
		340.60	4.20	3.3106E-002		-3.0582E-002
		375.00	0.68	1.9475E-001		4.7473E-002
		415.60	1.75	7.4406E-002		2.1396E-002
	Pu-239	129.28	0.01	8.6098E+001	8.37E+001	-4.3829E+001
		375.00	0.00	8.3695E+001		2.0402E+001
		413.70	0.00	8.7241E+001		2.0615E+001
		451.50	0.00	7.1086E+002		-4.6581E+002
	AM-241	59.54	35.70	6.2206E-002	6.22E-002	-2.4514E-002
		125.28	0.00	1.3971E+002		-1.4554E+001
		335.40	0.00	3.0049E+002		1.2420E+002
		662.42	0.00	4.2746E+002		5.8527E+002
		722.70	0.00	1.0486E+003		3.9584E+002
	PU-241	114.00	0.02	2.7946E+001	2.79E+001	2.3048E+001
		332.60	0.00	5.0325E+001		1.3138E-001
	CM-243	209.70	3.27	5.7258E-002	1.13E-002	-2.4121E-002
		228.18	10.56	1.6224E-002		-1.9609E-003
		277.60	14.00	1.1292E-002		2.0568E-003

+ = Nuclide identified during the nuclide identification
* = Energy line found in the spectrum
> = MDA value not calculated
@ = Half-life too short to be able to perform the decay correction

N U C L I D E T O T A L S

Nuclide	Mass (g)

C A N B E R R A I S O C S A N A L Y S I S

Report Generated On : 2/22/02 1:34:06 PM

Sample Title : 1700 Side B
Spectrum Description :
Sample Identification : 1254
Sample Size : 20.9 kg

Sample Taken On : 2/20/02 1:29:00 PM
Acquisition Started : 2/20/02 1:29:52 PM

Live Time: 1800.0 seconds Real Time: 1802.3 seconds

ISOCS Calabration : 1700 HOLD_DOW
Energy Calibration Used Done On : 2/27/01
Efficiency Calibration Used Done On : 2/22/02

P E A K A N A L Y S I S R E P O R T

Peak No.	Peak centroid	Energy (keV)	Net Peak Area	Net Area Uncert.	Continuum Counts
1	340.21	85.13	9.14E+002	58.54	2.40E+003
2	351.33	87.91	2.52E+002	55.62	2.42E+003
3	371.38	92.92	1.40E+002	47.89	2.44E+003
4	400.71	100.25	1.56E+002	53.57	2.44E+003
5	2044.19	510.99	1.18E+002	14.45	6.51E+001
6	2438.53	609.54	6.77E+001	11.08	4.78E+001
7	2648.17	661.93	8.27E+001	11.64	4.17E+001
8	3646.38	911.40	4.77E+001	9.12	2.24E+001
9	7063.15	1765.32	2.34E+001	6.17	1.28E+000

NUCLIDE IDENTIFICATION REPORT

Nuclide Name	Id Confidence	Energy (keV)	Yield (%)	Activity (uCi)	Activity Uncertainty
CS-137	0.997	661.65*	85.12	2.08507E-003	3.00469E-004

INTERFERENCE CORRECTED REPORT

Nuclide Name	Nuclide Id Confidence	Wt mean Activity (uCi/kg)	Wt mean Activity Uncertainty
CS-137	0.997	2.085075E-003	3.004689E-004

? = nuclide is part of an undetermined solution
X = nuclide rejected by the interference analysis
@ = nuclide contains energy lines not used in Weighted Mean Activity

Errors quoted at 1.000 sigma

****
***** N U C L I D E M D A R E P O R T *****
****

	Nuclide Name	Energy (keV)	Yield (%)	Line MDA (uCi/kg)	Nuclide MDA (uCi/kg)	Activity (uCi/kg)
	CO-60	1173.22	100.00	1.2911E-003	1.12E-003	3.6300E-004
		1332.49	100.00	1.1207E-003		1.1770E-003
	CS-134	475.35	1.46	9.5565E-002	1.50E-003	-1.0990E-002
		563.23	8.38	1.5722E-002		-1.6179E-003
		569.32	15.43	8.5427E-003		-3.8507E-003
		604.70	97.60	1.5221E-003		5.3733E-004
		795.84	85.40	1.4951E-003		5.6857E-004
		801.93	8.73	1.4394E-002		-9.3055E-003
		1038.57	1.00	1.2555E-001		1.6799E-001
		1167.94	1.80	7.1972E-002		1.0574E-002
		1365.15	3.04	3.4668E-002		8.6665E-003
+	CS-137	661.65*	85.12	8.2517E-004	8.25E-004	2.0851E-003
	NP-237	300.17	6.20	2.4151E-002	4.18E-003	4.2088E-003
		312.00	36.00	4.1835E-003		-1.1965E-003
		340.60	4.20	3.3106E-002		1.5622E-002
		375.00	0.68	1.9475E-001		-8.6059E-002
		415.60	1.75	7.5949E-002		1.0606E-002
	Pu-239	129.28	0.01	8.5158E+001	8.37E+001	-1.1170E+001
		375.00	0.00	8.3695E+001		-3.6984E+001
		413.70	0.00	8.8676E+001		-1.0547E+001
		451.50	0.00	6.9695E+002		4.4466E+002
	AM-241	59.54	35.70	6.2364E-002	6.24E-002	-2.5427E-002
		125.28	0.00	1.3965E+002		9.6674E+000
		335.40	0.00	2.8006E+002		6.3701E+001
		662.42	0.00	4.4215E+002		2.7147E+002
		722.70	0.00	9.6483E+002		6.0767E+002
	PU-241	114.00	0.02	2.7739E+001	2.77E+001	-1.0182E+001
		332.60	0.00	4.7751E+001		-5.2752E+001
	CM-243	209.70	3.27	5.6549E-002	1.13E-002	-4.4168E-002
		228.18	10.56	1.6214E-002		-1.4199E-002
		277.60	14.00	1.1272E-002		9.4606E-003

+ = Nuclide identified during the nuclide identification
* = Energy line found in the spectrum
> = MDA value not calculated
@ = Half-life too short to be able to perform the decay correction

N U C L I D E T O T A L S

Nuclide	Mass (g)

Bldg 233-S
NDA Item Description Sheet
~~Pipe~~ Geometry
RECTANGULAR

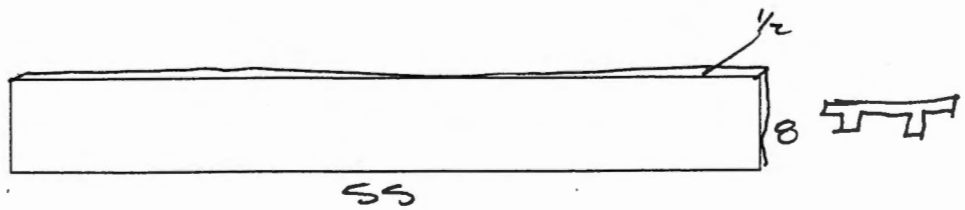

Put Dimensions on Pipe

Item ID: 1346

Weight (kg): 54 lbs 24.5 Kg

Material Description: C CHANNEL

Packaging: 3 + PADDING

Detector Distance (in): 50

Detector Filters: NONE

Dose Rate: 2.5

Comments: A 1800 1255
B 1800 1256

233-S Item Analysis

Spreadsheet Version 3.0b

1/14/02

Sample Info:

Item ID:	1364	**Assay Date:**	20-Feb-02
File Name:	1255	**File Name:**	1256

Data Input:

Isotope	Activity (uCi/kg)	Meas Uncert	Activity (uCi/kg)	Meas Uncert
Pu-239 (129)	3.81E+01	8.90E+00	3.10E+01	8.04E+00
Pu-239 (414)				
Am-241	5.90E+00	4.97E-01	1.10E+01	9.31E-01
Np-237	9.90E-03	8.09E-04	2.14E-02	1.35E-03
U-238				
U-235				
Cs-137	1.31E-03	2.16E-04	1.67E-03	2.35E-04
Co-60				

Item Parameters:

Contamination:	Surface only	Item Type:	Box	Calcs:	Average

Dimensions:

Length (in):	55	Width (in):	8	Depth (in):	0.25
Weight (lbs):	54	Depth for TMU (in):	4	% Volume:	100

Am-241 Calcs:

Measured	8.46E+00	+/-	2.18E+00	Use Meas
Calculated	4.78E+01	+/-	3.08E+01	

Nuclide Activities:

Isotope	Activity (nCi/g)		Total Unc 1 sigma
Pu-238	1.40E+01	+/-	3.22E+00
Pu-239	3.45E+01	+/-	7.95E+00
Pu-240	1.80E+01	+/-	4.14E+00
Pu-241	6.72E+01	+/-	1.55E+01
Pu-242	1.82E-02	+/-	4.19E-03
Am-241	8.46E+00	+/-	2.18E+00
Np-237	1.56E-02	+/-	1.75E-03
U-238	0.00E+00	+/-	0.00E+00
U-235	0.00E+00	+/-	0.00E+00
Cs-137	1.49E-03	+/-	2.18E-04
Co-60	0.00E+00	+/-	0.00E+00

Results:

Total TRU Activity(nCi/g):	7.50E+01	+/-	9.77E+00	Calc from Pu-239 Act	
Pu (g):	1.58E-02	**Pu (g) + 3 sigma TMU:**	2.67E-02		
		Pu(g) + 3 sigma:	2.40E-02		

Comments:

Density error is due to geometry

Errors:Density > 1,

Analyst: Martin Winterrose

Date: 2/22/02

```
#Date & Time: Wed Feb 20 14:19:30 2002
~g=RECTANGULAR_PLANE
~description=1346_CHANNEL
~comment=ANGLE_IRON
~Ccollimator=50MM-180D
~crpn=4
~Detector=7219
~Convergence in %=1          ~MDRPN=4
~Lunit=IN  ~Tunit=C  ~Dunit=G/CU.C    ~Punit=MM.HG
~at=20        ~ap=760       ~rh=50
~Energies kev=   50.000,  100.000,  128.000,  130.000,  150.000,  200.000,#
                300.000,  500.000,  700.000, 1000.000, 1400.000, 2000.000,#
               4000.000,
~Error in %=     10.000,   10.000,   10.000,   10.000,   10.000,    8.000,#
                  8.000,    6.000,    6.000,    4.000,    4.000,    4.000,#
                  4.000,
~d1.1=0.024     ~d1.2=55        ~d1.3=8         ~1mater=POLYPROP ~1den=0.91
~d2.1=0.024     ~2mater=POLYPROP ~2den=0.91
~d3.1=0.0312    ~3mater=DRYDIRT  ~3den=1.6       ~3con=1
~d4.1=0.25      ~4mater=304SS    ~4den=7.81
~d5.1=0.0312    ~5mater=DRYDIRT  ~5den=1.6       ~5con=1
~d6.1=0.024     ~6mater=POLYPROP ~6den=0.91
~sd1=50
```

C A N B E R R A I S O C S A N A L Y S I S

Report Generated On : 2/20/02 2:51:21 PM

Sample Title : 1346 Side A
Spectrum Description :
Sample Identification : 1255
Sample Size : 24.5 kg

Sample Taken On : 2/20/02 2:20:00 PM
Acquisition Started : 2/20/02 2:21:08 PM

Live Time: 1800.0 seconds Real Time: 1806.5 seconds

ISOCS Calabration : 1346 CHANNEL
Energy Calibration Used Done On : 2/27/01
Efficiency Calibration Used Done On : 2/20/02

P E A K A N A L Y S I S R E P O R T

Peak No.	Peak centroid	Energy (keV)	Net Peak Area	Net Area Uncert.	Continuum Counts
1	239.24	59.89	1.29E+005	3594.28	2.94E+003
2	340.26	85.14	8.25E+002	65.72	2.56E+003
3	350.53	87.71	1.62E+002	54.79	2.56E+003
4	395.99	99.07	4.05E+002	51.40	2.53E+003
5	518.38	129.66	2.74E+002	44.62	2.18E+003
6	1201.55	300.39	6.75E+001	14.59	1.66E+002
7	1248.65	312.17	3.35E+002	22.20	1.57E+002
8	1500.40	375.08	3.45E+001	12.10	1.08E+002
9	2044.05	510.95	1.45E+002	15.07	6.87E+001
10	2438.43	609.51	8.25E+001	11.92	4.99E+001
11	2647.77	661.83	6.65E+001	10.81	4.54E+001
12	3645.42	911.16	5.36E+001	9.51	2.03E+001
13	7063.33	1765.36	2.50E+001	6.21	1.73E+000

NUCLIDE IDENTIFICATION REPORT

Nuclide Name	Id Confidence	Energy (keV)	Yield (%)	Activity (uCi)	Activity Uncertainty
CS-137	0.999	661.65*	85.12	1.30666E-003	2.16388E-004
NP-237	0.811	300.17*	6.20	1.13649E-002	2.51567E-003
		312.00*	36.00	9.90361E-003	8.09324E-004
		340.60	4.20		
		375.00*	0.68	5.98805E-002	2.11842E-002
		415.60	1.75		
Pu-239	0.745	129.28*	0.01	3.80567E+001	8.89873E+000
		375.00*	0.00	2.57335E+001	9.24833E+000
		413.70	0.00		
		451.50 @	0.00		
AM-241	0.995	59.54*	35.70	5.90481E+000	4.97323E-001
		125.28	0.00		
		335.40	0.00		
		662.42* @	0.00	3.08951E+002	5.11569E+001
		722.70	0.00		

INTERFERENCE CORRECTED REPORT

Nuclide Name	Nuclide Id Confidence	Wt mean Activity (uCi/kg)	Wt mean Activity Uncertainty
CS-137	0.999	1.281682E-003	2.163693E-004
NP-237	0.811	1.000657E-002	7.700964E-004
Pu-239 @	0.745	3.250921E+001	5.260222E+000
AM-241 @	0.995	5.904806E+000	4.973234E-001

? = nuclide is part of an undetermined solution
X = nuclide rejected by the interference analysis
@ = nuclide contains energy lines not used in Weighted Mean Activity

Errors quoted at 1.000 sigma

****
***** N U C L I D E M D A R E P O R T *****
****

	Nuclide Name	Energy (keV)	Yield (%)	Line MDA (uCi/kg)	Nuclide MDA (uCi/kg)	Activity (uCi/kg)
	CO-60	1173.22	100.00	9.5728E-004	9.57E-004	-1.4363E-003
		1332.49	100.00	1.0461E-003		3.1041E-004
	CS-134	475.35	1.46	7.0397E-002	1.17E-003	-1.7948E-002
		563.23	8.38	1.1972E-002		2.0051E-003
		569.32	15.43	6.4443E-003		3.5840E-003
		604.70	97.60	1.2237E-003		2.4479E-004
		795.84	85.40	1.1733E-003		1.2104E-003
		801.93	8.73	1.1252E-002		-1.5829E-003
		1038.57	1.00	9.9183E-002		-4.4432E-002
		1167.94	1.80	6.1984E-002		5.8611E-002
		1365.15	3.04	3.2672E-002		1.7904E-002
+	CS-137	661.65*	85.12	6.6935E-004	6.69E-004	1.3067E-003
+	NP-237	300.17*	6.20	1.0537E-002	1.80E-003	1.1365E-002
		312.00*	36.00	1.8038E-003		9.9036E-003
		340.60	4.20	2.6179E-002		1.5279E-002
		375.00*	0.68	8.8510E-002		5.9881E-002
		415.60	1.75	6.6573E-002		9.0950E-002
+	Pu-239	129.28*	0.01	3.0548E+001	3.05E+001	3.8057E+001
		375.00*	0.00	3.8037E+001		2.5733E+001
		413.70	0.00	7.4702E+001		1.8312E+001
		451.50	0.00	5.3708E+002		-5.7617E+002
+	AM-241	59.54*	35.70	1.1703E-002	1.17E-002	5.9048E+000
		125.28	0.00	8.1298E+001		-3.7696E+001
		335.40	0.00	2.2324E+002		-2.6909E+001
		662.42*	0.00	1.5826E+002		3.0895E+002
		722.70	0.00	8.3151E+002		5.0333E+002
	PU-241	114.00	0.02	1.5679E+001	1.57E+001	2.4089E+001
		332.60	0.00	3.8161E+001		1.0090E+001
	CM-243	209.70	3.27	4.1775E-002	7.84E-003	2.3889E-004
		228.18	10.56	1.1939E-002		6.8764E-003
		277.60	14.00	7.8399E-003		-8.1685E-003

+ = Nuclide identified during the nuclide identification
* = Energy line found in the spectrum
> = MDA value not calculated
@ = Half-life too short to be able to perform the decay correction

N U C L I D E T O T A L S

Nuclide	Mass (g)
Pu-239	1.28E-002 +/- 2.08E-003

C A N B E R R A I S O C S A N A L Y S I S

Report Generated On : 2/20/02 3:35:39 PM

Sample Title : 1346 Side B
Spectrum Description :
Sample Identification : 1256
Sample Size : 24.5 kg

Sample Taken On : 2/20/02 3:05:00 PM
Acquisition Started : 2/20/02 3:05:22 PM

Live Time: 1800.0 seconds Real Time: 1809.9 seconds

ISOCS Calabration : 1346 CHANNEL
Energy Calibration Used Done On : 2/27/01
Efficiency Calibration Used Done On : 2/20/02

P E A K A N A L Y S I S R E P O R T

Peak No.	Peak centroid	Energy (keV)	Net Peak Area	Net Area Uncert.	Continuum Counts
1	239.24	59.90	2.40E+005	6896.33	3.60E+003
2	340.32	85.16	8.79E+002	65.36	2.57E+003
3	348.69	87.25	4.24E+002	59.12	2.59E+003
4	380.14	95.11	2.91E+002	52.31	2.60E+003
5	395.96	99.06	7.70E+002	61.43	2.58E+003
6	412.87	103.29	3.04E+002	70.91	2.55E+003
7	436.50	109.19	1.59E+002	53.67	2.67E+003
8	444.85	111.28	1.93E+002	52.46	2.63E+003
9	518.81	129.77	2.23E+002	44.20	2.24E+003
10	834.94	208.77	8.15E+001	19.88	3.89E+002
11	1201.39	300.36	1.41E+002	17.52	1.74E+002
12	1248.64	312.16	7.23E+002	29.94	1.62E+002
13	1363.86	340.96	8.14E+001	14.15	1.34E+002
14	1500.12	375.01	6.32E+001	12.39	9.43E+001
15	1655.84	413.93	3.80E+001	11.36	8.71E+001
16	2046.00	511.44	1.18E+002	17.58	6.11E+001
17	2438.31	609.48	7.15E+001	11.45	4.45E+001
18	2647.65	661.80	8.49E+001	11.63	4.59E+001
19	3646.10	911.33	5.60E+001	10.01	2.55E+001
20	7065.70	1765.96	3.17E+001	6.92	1.21E+000

NUCLIDE IDENTIFICATION REPORT

Nuclide Name	Id Confidence	Energy (keV)	Yield (%)	Activity (uCi)	Activity Uncertainty
CS-137	0.999	661.65*	85.12	1.66853E-003	2.34549E-004
NP-237	0.995	300.17*	6.20	2.37037E-002	3.16185E-003
		312.00*	36.00	2.13655E-002	1.35169E-003
		340.60*	4.20	2.16385E-002	3.89415E-003
		375.00*	0.68	1.09794E-001	2.20491E-002
		415.60*	1.75	2.72094E-002	8.21926E-003
Pu-239	0.966	129.28*	0.01	3.09781E+001	8.04242E+000
		375.00*	0.00	4.71837E+001	9.93472E+000
		413.70*	0.00	3.14440E+001	9.72398E+000
		451.50 @	0.00		
AM-241	0.995	59.54*	35.70	1.10174E+001	9.30842E-001
		125.28	0.00		
		335.40	0.00		
		662.42* @	0.00	3.94515E+002	5.54475E+001
		722.70	0.00		

INTERFERENCE CORRECTED REPORT

Nuclide Name	Nuclide Id Confidence	Wt mean Activity (uCi/kg)	Wt mean Activity Uncertainty
CS-137	0.999	1.621936E-003	2.345387E-004
NP-237	0.995	2.142887E-002	1.175553E-003
Pu-239 @	0.966	2.694046E+001	4.613773E+000
AM-241 @	0.995	1.101739E+001	9.308423E-001

? = nuclide is part of an undetermined solution
X = nuclide rejected by the interference analysis
@ = nuclide contains energy lines not used in Weighted Mean Activity

Errors quoted at 1.000 sigma

****
***** N U C L I D E M D A R E P O R T *****
****

	Nuclide Name	Energy (keV)	Yield (%)	Line MDA (uCi/kg)	Nuclide MDA (uCi/kg)	Activity (uCi/kg)
	CO-60	1173.22	100.00	1.0657E-003	9.94E-004	-7.3263E-004
		1332.49	100.00	9.9445E-004		-3.9769E-004
	CS-134	475.35	1.46	6.8714E-002	1.16E-003	-1.9620E-003
		563.23	8.38	1.2003E-002		4.2414E-003
		569.32	15.43	6.5458E-003		2.2059E-003
		604.70	97.60	1.1644E-003		-3.2518E-004
		795.84	85.40	1.1919E-003		7.5459E-004
		801.93	8.73	1.1982E-002		-2.4266E-003
		1038.57	1.00	1.1131E-001		8.1929E-002
		1167.94	1.80	5.7354E-002		-5.7895E-002
		1365.15	3.04	2.9408E-002		-1.2522E-002
+	CS-137	661.65*	85.12	6.7279E-004	6.73E-004	1.6685E-003
+	NP-237	300.17*	6.20	1.0794E-002	1.83E-003	2.3704E-002
		312.00*	36.00	1.8297E-003		2.1366E-002
		340.60*	4.20	1.5025E-002		2.1638E-002
		375.00*	0.68	8.3159E-002		1.0979E-001
		415.60*	1.75	3.3061E-002		2.7209E-002
+	Pu-239	129.28*	0.01	3.0929E+001	3.09E+001	3.0978E+001
		375.00*	0.00	3.5737E+001		4.7184E+001
		413.70*	0.00	3.8206E+001		3.1444E+001
		451.50	0.00	5.2161E+002		8.5803E+001
+	AM-241	59.54*	35.70	1.2933E-002	1.29E-002	1.1017E+001
		125.28	0.00	8.1894E+001		-8.5710E+000
		335.40	0.00	2.2023E+002		-7.8850E+001
		662.42*	0.00	1.5908E+002		3.9452E+002
		722.70	0.00	8.1371E+002		1.1256E+002
	PU-241	114.00	0.02	1.5711E+001	1.57E+001	-7.3220E+000
		332.60	0.00	3.6694E+001		2.2821E+001
	CM-243	209.70	3.27	4.3121E-002	8.54E-003	-4.3877E-004
		228.18	10.56	1.2100E-002		3.6533E-003
		277.60	14.00	8.5418E-003		-4.2486E-003

+ = Nuclide identified during the nuclide identification
* = Energy line found in the spectrum
> = MDA value not calculated
@ = Half-life too short to be able to perform the decay correction

N U C L I D E T O T A L S

Nuclide	Mass (g)
Pu-239	1.06E-002 +/- 1.82E-003