DOCUMENT RELEASE AND CHANGE FORM

Prepared For the U.S. Department of Energy, Assistant Secretary for Environmental Management
By Washington River Protection Solutions, LLC., PO Box 850, Richland, WA 99352
Contractor For U.S. Department of Energy, Office of River Protection, under Contract DE-AC27-08RV14800

TRADEMARK DISCLAIMER: Reference herein to any specific commercial product, process, or service by trade name, trademark, manufacturer, or otherwise, does not necessarily constitute or imply its endorsement, recommendation, or favoring by the United States government or any agency thereof or its contractors or subcontractors. Printed in the United States of America.

Release Stamp

DATE:
Mar 10, 2020
HANFORD RELEASE

1. **Doc No:** RPP-RPT-61976 **Rev.** 01

2. **Title:**
Effluent Management Facility (EMF) to Liquid Effluent Retention Facility (LERF) Process Condensate Transfer Pipeline Leak Detection

3. **Project Number:** T1P191 ☐N/A

4. **Design Verification Required:** ☐Yes ☒No

5. **USQ Number:** ☒ N/A RPP-27195

6. **PrHA Number** **Rev.** ☒ N/A

Clearance Review Restriction Type: public

7. **Approvals**

Title	Name	Signature	Date
Checker	Fullerton, Kody A	*Fullerton, Kody A*	03/10/2020
Clearance Review	Ayers, Lynn M	*Ayers, Lynn M*	03/10/2020
Document Control Approval	Hood, Evan	*Hood, Evan*	03/10/2020
Environmental Protection	Wall, Jeremy M	*Wall, Jeremy M*	03/10/2020
Originator	Huntington, Matthew R	*Huntington, Matthew R*	03/10/2020
Responsible Manager	Laurenz, Julian E	*Laurenz, Julian E*	03/10/2020

8. **Description of Change and Justification**

Revision 1 incorporates comments received from DOE review.

9. **TBDs or Holds** ☒N/A

10. **Related Structures, Systems, and Components**

a. **Related Building/Facilities** ☐N/A	b. **Related Systems** ☐N/A	c. **Related Equipment ID Nos. (EIN)** ☐N/A
LERF FACILITIES	241-COND LERF-60M LERF-80W	3"-EVAP COND-PC5000-M17 3"-WTP-002-M17 4"-WTP-001-M17 LDE-42-2 LDE-43-2

11. **Impacted Documents – Engineering** ☒N/A

Document Number	Rev.	Title

12. **Impacted Documents (Outside SPF):**

N/A

13. **Related Documents** ☐N/A

Document Number	Rev.	Title
H-2-88766 SH 001	14	P & ID LERF BASIN & ETF INFLUENT EVAPORATOR
H-2-88766 SH 002	16	P&ID LERF BASIN & ETF INFLUENT EVAPORATOR
H-2-88766 SH 003	20	P&ID LERF BASIN & ETF INFLUENT EVAPORATOR
H-2-88766 SH 004	22	P&ID LERF BASIN & ETF INFLUENT EVAPORATOR
H-2-88766 SH 005	02	P & ID LERF-WTP INTERFACE
MT-50373	01	310/311 Waste Transfer Lines Leak Detection
RPP-CALC-62638	00	WTP/Evaporator Transfer System Hydraulic Analysis

14. **Distribution**

Name	Organization
Allen, Clyde P	PROD OPS ENV COMPLIANCE
Coughlin, Dan P	PROD OPS ENV COMPLIANCE
Foster, Jim	242-A/AW/ETF OPERATIONS
Halgren, Dale L	ETF ENGINEERING
Thompson, Suzette A	RCRA PERMITTING
Van Mason, Eric J	RCRA PERMITTING
Wood, R Robert H	TFP PROJECT MANAGEMENT

RPP-RPT-61976
Revision 1

Effluent Management Facility (EMF) to Liquid Effluent Retention Facility (LERF) Process Condensate Transfer Pipeline Leak Detection

Prepared by

M.R. Huntington
Washington River Protection Solutions, LLC

Date Published
See SPF title page

Prepared for the U.S. Department of Energy
Office of River Protection

Contract No. DE-AC27-08RV14800

Approved for Public Release;
Further Dissemination Unlimited

TABLE OF CONTENTS

LIST OF TERMS IV
LIST OF UNITS V
PRELUDE 1
1.0 INTRODUCTION 2
2.0 DESCRIPTION OF TRANSFER PIPELINES 2
2.1 WTP Primary Transfer Pipeline 4”-WTP-001-M17 (310) 3
2.2 WTP Backup Transfer Pipeline 3”-WTP-002-M17 (311) 3
2.3 PC-5000 Transfer Pipeline 4
2.4 Caisson MH-WTP-01 detailed information 4
3.0 COMPLIANCE WITH REGULATORY REQUIREMENTS 8
3.1 Waste Compatibility 10
3.1.1 Waste/Materials Interactions 10
4.0 EVALUATION OF LEAK DETECTION METHODS 12
4.1 Selection of Leak Detection System 13
5.0 FRP PIPELINE LEAK RATES AND FAILURE MODES 16
5.1 Pipeline Leak Probability 16
5.2 Failure of FRP within Pipeline Segments (Away From A Joint) 17
5.3 Failure of FRP Pipeline at Joint 17
6.0 TRANSFER PIPELINE TIGHTNESS TESTING AND INTEGRITY ASSESSMENTS 18
6.1 4”-WTP-001-M17 and 3”-WTP-002-M17 Tightness Testing and Integrity Assessments 18
6.2 PC-5000 Tightness Testing and Integrity Assessments 18
7.0 CONCLUSION 20
8.0 REFERENCES 21
8.1 Future References 22

LIST OF FIGURES

Figure 1. 4”-WTP-001-M17 Transfer Pipeline Hydrostatic Testing (12/1/2000) 3
Figure 2. MH-WTP-01 with lid installed (6/25/18) 5
Figure 3. Internals of MH-WTP-01 with lid removed (11/06/19) 5
Figure 4. 242-A Evaporator and WTP 310/311 Transfer Pipelines to the LERF Basins 6

Figure 3. Leak Detection Configuration at Basin 43 12

LIST OF TABLES

Table 1. Description of Transfer Pipelines 7
Table 2. Secondary Containment Compliance with WAC 173-303-640(4)(b) 8
Table 3. General Limits for Liner Compatibility 11
Table 4. Leak Detector Selection Summary 14
Table 5. Secondary Containment Leak Detection Rates 16

LIST OF TERMS

310	4”-WTP-001-M17 transfer pipeline
311	3”-WTP-002-M17 transfer pipeline
ASME	American Society of Mechanical Engineers
ASTM	American Society for Testing and Materials
ATM	Atmospheric press
CFR	Code of Federal Regulations
DOE	U.S. Department of Energy
DTS	distributed temperature sensing
ECN	Engineering Change Notice
Ecology	state of Washington, Department of Ecology
EMF	Effluent Management Facility
ETF	Effluent Treatment Facility
FCI	Fluid Components International
FH	Fluor Hanford
FRP	fiberglass reinforced plastic
GPH	gallons per hour
HNF	Hanford Nuclear Facility
IAR	Integrity Assessment Report
LERF	Liquid Effluent Retention Facility
LETS	Liquid Effluent Transfer System
ORP	Office of River Protection
PER	Problem Evaluation Request
RCRA	*Resource Conservation and Recovery Act*
RTD	resistance temperature devices
SME	Subject Matter Expert
TSD	treatment, storage and disposal
WAC	Washington Administrative Code
WRPS	Washington River Protection Solutions, LLC
WTP	Waste Treatment and Immobilization Plant

LIST OF UNITS

GPH	Flow rate, Gallons Per Hour
°F	Temperature, Degrees Fahrenheit
3”	Size, Three Inches
4”	Size, Four Inches
PSI	Pressure, Pounds per Square Inch

PRELUDE

This report is being submitted to the state of Washington Department of Ecology to complete Hanford Facility Resource Conservation and Recovery Act (RCRA) Permit, Dangerous Waste Portion (WA7890008967) for the 242-A Evaporator Permit Condition III.4.C.1; and the Liquid Effluent Retention Facility (LERF) and 200 Area Effluent Treatment Facility (ETF) proposed Class 3 Permit Condition III.3.J.2 below:

242-A Evaporator Permit Condition III.4.C.1:

> "Within 90 days of the effective date of the permit modification, the Permittee shall demonstrate to the department that the leak detection system for the combined PC-5000/ 3"-WTP-002-M17 transfer pipelines is designed and operated to detect the presence of liquid in the secondary containment system at the earliest practicable time if the existing detection technologies or site conditions will not allow detection of a release within 24-hours. The Permittees must consider alternative configurations for leak detection and this information will be provided to the department for concurrence. The department will provide a response within 30 days. [WAC 173-303-640(4)(c)(iii)]"

LERF and 200 Area ETF Permit Condition III.3.J.2:

> "Within 90 days of the effective date of the permit modification, the Permittee shall demonstrate to the department that the leak detection system for WTP primary transfer line (4"-WTP-001-M17) to LERF Basin 42 is designed and operated to detect the presence of liquid in the secondary containment system at the earliest practicable time if the existing detection technologies or site conditions will not allow detection of a release within 24 hours. As part of this demonstration, the Permittees must consider alternative configurations for leak detection and this information will be provided to the department for concurrence. The department will provide a response within 30 days. [WAC 173-303-640(4)(c)(iii)]"

This report demonstrates that the selected leak detector design, of a low point thermal dispersion leak detection system, will detect the presence of liquid in the secondary containment system at the earliest practicable time based on existing leak detection technologies, and site conditions (location and rate of the leak).

This report evaluates the leak detection design for 4"-WTP-001-M17 (310) and combined PC-5000/3"-WTP-002-M17 (311) transfer pipelines that run from the Waste Treatment and Immobilization Plant (WTP) Effluent Management Facility (EMF) to the LERF. Table 2 addresses how the design and operation of the leak detection and secondary containment system meets WAC 173-303-640(4)(b), tank systems, containment and detection of releases, secondary containment systems. Section 4.0 and Table 4 review alternative leak detection configurations. The report concludes that the leak detection system of low point thermal dispersion leak detection meets the Washington Administrative Code (WAC) 173-303 requirements, and based on site conditions and Hanford Site experience with leak detection systems is the best leak detection option for the 3"-WTP-002-M17 and the combined PC-5000/3"-WTP-002-M17 transfer pipelines.

1.0 INTRODUCTION

In accordance with the 242-A Evaporator Permit Condition III.4.C.1 and LERF and 200 Area ETF Permit Condition III.3.J.2, this report evaluates the leak detection design for the transfer pipelines 4”-WTP-001-M17 (310) and 3”-WTP-002-M17 (311) against the WAC 173-303 regulations (see Table 2), and explores alternative leak detection configurations (see Table 4). The report demonstrates that the selected low point thermal dispersion leak detection system is designed to work with the existing installed transfer pipelines and detect the presence of liquid in the secondary containment system at the earliest practicable time based on available, deployable, and proven leak detection technologies, and site conditions (location and rate of leak).

2.0 DESCRIPTION OF TRANSFER PIPELINES

The 4”-WTP-001-M17 and 3”-WTP-002-M17 transfer pipelines were installed in the early 2000s, by Project W-519, *Liquid Effluent Transfer System*. In support of Direct-Feed Low-Activity Waste (DFLAW), the 4”-WTP-001-M17 transfer pipeline is being added to the LERF and 200 Area ETF permit, and the 3”-WTP-002-M17 transfer pipeline is included in the 242-A Evaporator permit. Ecology and the Department of Energy (DOE) agreed, since the transfer pipelines are already constructed and installed they would be put in a unit group permit now and once all the operating permits are written for DFLAW the pipelines may be moved to another Hanford facility treatment, storage, and or disposal (TSD) unit group. A depiction of these transfer pipelines are shown in Figure 4 (this report is focused on the blue transfer pipeline segments). Table 1, provides a summary of the transfer pipelines.

The project W-519 scope included:

- ~6,330 feet long 4”-WTP-001-M17 transfer pipeline
- ~2,400 feet long 3”-WTP-002-M17 transfer pipeline
- Leak detection for all transfer pipeline added
- Instrumentation
- Other pipelines and ancillary equipment (outside the scope of this report)

The materials of construction for both 4”-WTP-001-M17 and 3”-WTP-002-M17 transfer pipelines are fiberglass reinforced plastic (FRP), per the M17 pipe specification. Both the inner and outer pipelines meet the requirements of ASTM D2996, Type 1, Grade 1, and Class F Standard Specification for Filament Wound “Fiberglass” (Glass-Fiber-Reinforced Thermosetting-Resin) Pipe. The brand is Bondstrand[1] 4000 series. Figure 1 was taken during the initial field installation circa December 2000 and shows testing of the primary transfer pipeline.

The systems were designed and installed per ASME B31.3, *Process Piping*, for both dead weight and seismic conditions. The transfer pipeline is supported within the containment pipe with spacers located periodically along the length of each pipe segment. The spacers are installed to

[1] Bondstrand is a trademark of Ameron, Inc., Pasadena, California.

allow unencumbered flow of liquid down the encasement. The containment piping was installed on compacted soil and backfilled with homogeneous soil, which was also compacted to ensure no post install settling could occur.

Figure 1. 4”-WTP-001-M17 Transfer Pipeline Hydrostatic Testing (12/1/2000)

2.1 WTP Primary Transfer Pipeline 4”-WTP-001-M17 (310)

Transfer pipeline 4”-WTP-001-M17 is the primary transfer pipeline used to transfer process condensate from the Waste Treatment and Immobilization Plant (WTP) to the LERF basins. The 4”-WTP-001-M17 transfer pipeline from the WTP runs directly to the LERF Catch Basin 42 (H-2-88766, Sheet 5). Process condensate from the WTP Effluent Management Facility (EMF) is transferred to the LERF by a pump located at WTP.

The 4”-WTP-001-M17 transfer pipeline and encasement are sloped continuously to the LERF. If a leak develops in the primary pipe, fluid will travel down the interior of the encasement pipeline to the LERF Catch Basin 42, where the LDE-42-2 leak detector will detect the fluid and send an alarm signal to the ETF Control Room. Upon verification of a leak, the 200 Area ETF shift manager will direct shutdown of the aqueous waste through the transfer line(s). The pump located at WTP-EMF is shut down, stopping the flow of aqueous waste through the transfer pipeline. In addition to the leak detector, there is a low point sight glass FG-80W-001 at the LERF Catch Basin 42 that can be used to monitor for or confirm leakage.

2.2 WTP Backup Transfer Pipeline 3”-WTP-002-M17 (311)

Transfer pipeline 3”-WTP-002-M17 is the WTP backup transfer pipeline in event that the 4”-WTP-001-M17 transfer pipeline is unavailable. The process condensate from the WTP EMF is transferred to the PC-5000 transfer pipeline via a tie-in at caisson MH-WTP-01. PC-5000 then completes the transfer pipeline path to the LERF Catch Basin 43 (H-2-88766, Sheet 1 and 5).

The 3”-WTP-002-M17 transfer pipeline and encasement are sloped continuously to the PC-5000 transfer pipeline tie-in. The PC-5000 transfer pipeline and encasement are continuously sloped to the LERF Catch Basin 43. At the intersection of the transfer pipelines (3”-EVAP COND-PC5000-M17 and 3”-WTP-002-M17), caisson MH-WTP-01 provides secondary containment. Caisson MH-WTP-01, is a flat-bottomed fiberglass tank that allows leakage from the secondary containment pipes to transfer through the caisson from the higher elevation transfer pipeline encasement to the lower transfer pipeline encasement. If a leak were to develop in 3”-WTP-002-M17, fluid would travel down the encasement pipeline, through MH-WTP-01 and to the 3”-EVAP COND-PC5000-M17 encasement pipeline where it would flow to LERF Catch Basin 43 and be detected.

If the leak detection system detects a leak, the system will send a signal to the 200 Area ETF Control Room. Upon verification of a leak, the 200 Area ETF shift manager will direct shutdown of the aqueous waste through the transfer line(s). The pump located at the 242-A Evaporator or WTP-EMF is shut down, stopping the flow of aqueous waste through the transfer pipeline.

The PC-5000 transfer pipeline and the 3”-WTP-002-M17 transfer pipeline share a single-point electronic leak detector (LDE-43-2) that is installed at the LERF Catch Basin 43 on the end of the PC-5000 transfer pipeline. In addition to the leak detector, there is an encasement catch tank 60M-TK-1, and sight glass FG-60M-001.

2.3 PC-5000 Transfer Pipeline

Construction on the PC-5000 transfer pipeline began in late 1990, and completed in 1992. When the 242-A Evaporator restarted in 1994, it used the new PC-5000 transfer pipeline for transferring the process condensate to the LERF. The PC-5000 transfer pipeline has been in-service for 25 years.

The PC-5000 transfer pipeline configuration is documented on drawings H-2-98990, Sheet 1 and H-2-88766, Sheets 1 and 3. The PC-5000 transfer pipeline is fabricated of FRP, per the M17 pipe specification. Both the inner and outer pipes meet the requirements of ASTM D2996, Type 1, Grade 1, Class F Standard Specification for Filament Wound “Fiberglass” (Glass-Fiber-Reinforced Thermosetting-Resin) Pipe. The brand is Bondstrand 4000 series.

2.4 Caisson MH-WTP-01 detailed information

The caisson MH-WTP-01 contains four valves that can isolate either the PC-5000 or the 3”-WTP-002-M17 transfer pipelines. The secondary containment pipes are open to the caisson MH-WTP-01 allowing any leaks to transfer through the caisson to the LERF Catch Basin 43. To preclude the hold-up of liquid in the caisson and allow liquid to free flow, the secondary containment pipe internal surface bottoms (pipe inner diameter) are flush with the bottom internal surface of the caisson. The caisson has a 48-inch inside diameter, an overall height of 98-inches and a nominal wall thickness of ½-inch. The four isolation valves located in the caisson are controlled by operations. The valves are 3-inch in size and fabricated with stainless steel bodies. Operator extensions are installed on the valves to allow them to be manipulated with-out fully entering the caisson. The 42-inch diameter caisson lid has to be removed to access the valve handles. Figure 2 and Figure 3 show MH-WTP-01 with the lid installed and removed.

Figure 2. MH-WTP-01 with lid installed (6/25/18)

Figure 3. Internals of MH-WTP-01 with lid removed (11/06/19)

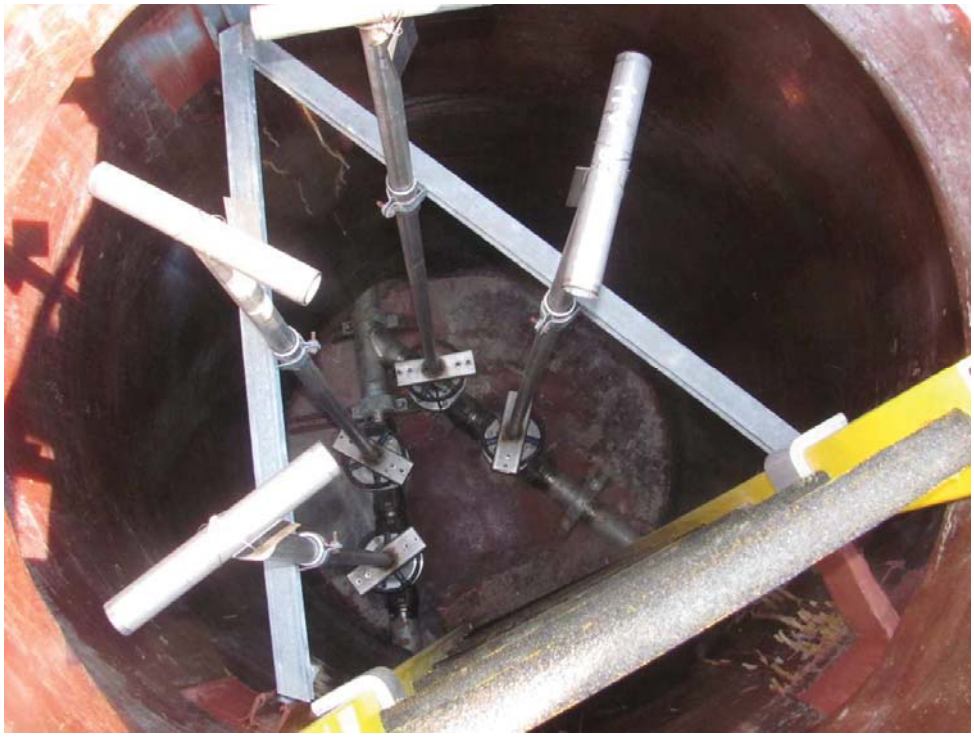

Figure 4. 242-A Evaporator and WTP 310/311 Transfer Pipelines to the LERF Basins

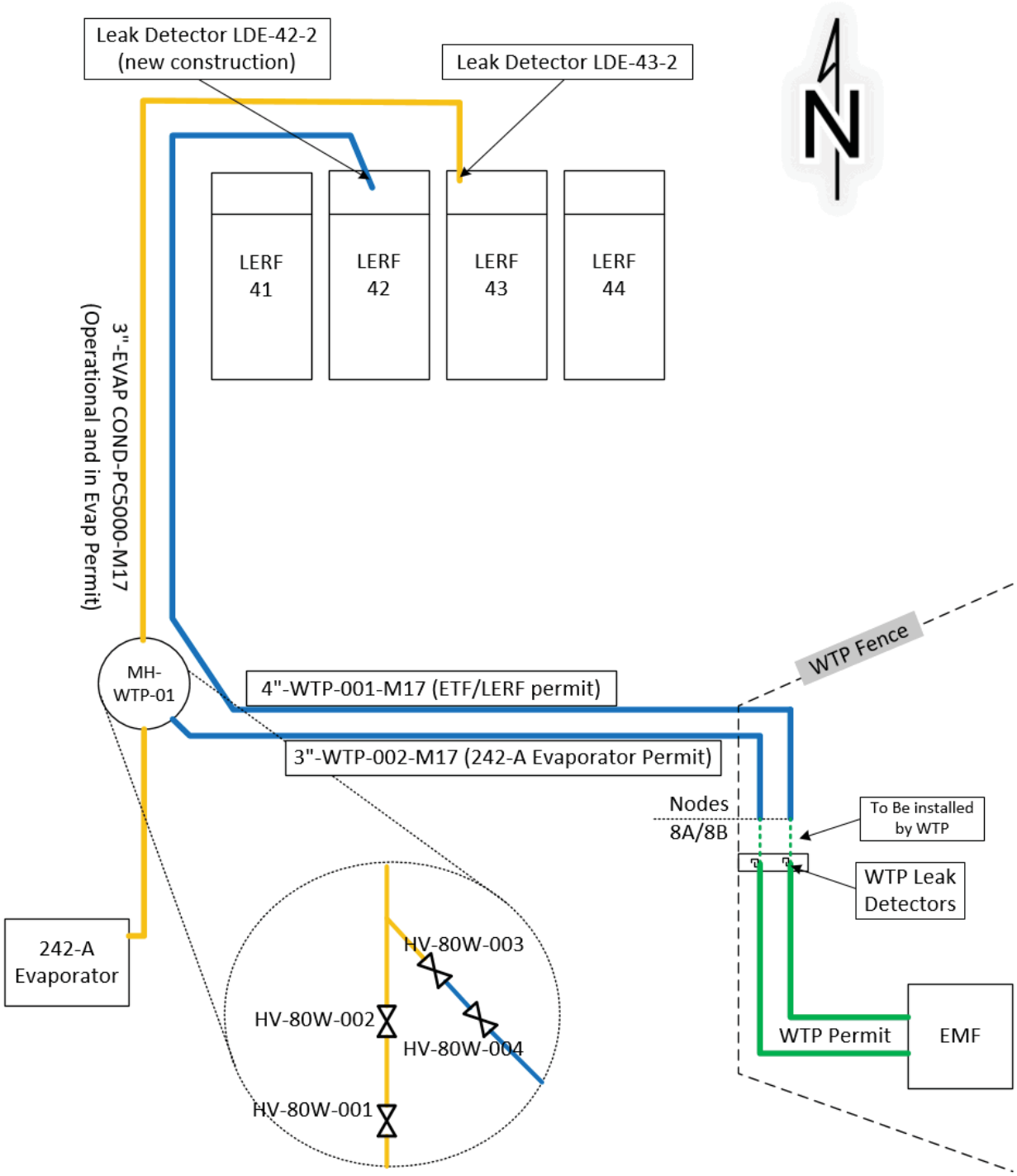

Table 1. Description of Transfer Pipelines

Pipeline Name	Description
3”-EVAP_COND-PC5000 (known as PC-5000)	Material of Construction: Bondstrand Series 4000 fiberglass reinforced plastic pipe. Size: Primary, 3-inch; Secondary, 6-inch; Length: ~4100 feet Design Pressure: 100PSI Test Pressure: 150PSI Design Temperature: 120°F Starting Point: 242-A Evaporator, with tie-in from 3”-WTP-002-M17 at MH-WTP-01 Ending Point: LERF Catch Basin 43 Integrity Assessment: RPP-RPT-60098 *242-A Evaporator System Integrity Assessment Report* (Published 12/2017)
4”-WTP-001-M17 (known as 310)	Material of Construction: Bondstrand Series 4000 fiberglass reinforced plastic pipe. Size: Primary, 4-inch; Secondary, 8-inch; Length: ~6300 feet Design Pressure: 100PSI (primary) ATM (encasement) Test Pressure: 150PSI (primary) 10PSI (encasement) Design Temperature: 120°F Starting Point: WTP Site, Node 8A Ending Point: LERF Catch Basin 42 Integrity Assessment: RPP-IQRPE-50056 *Integrity Assessment Report for the primary EMF to LERF Radiological Condensate Transfer System* (pending)
3”-WTP-002-M17 (known as 311)	Material of Construction: Bondstrand Series 4000 fiberglass reinforced plastic pipe. Size: Primary, 3-inch; Secondary, 6-inch; Length: ~2400 feet Design Pressure: 100PSI (primary) ATM (encasement) Test Pressure: 150PSI (primary) 10PSI (encasement) Design Temperature: 120°F Starting Point: WTP Site, Node 8B Ending Point: MH-WTP-01, then LERF Catch Basin 43 via PC-5000 Integrity Assessment: RPP-IQRPE-50057 *Integrity Assessment Report for the backup EMF to LERF Radiological Condensate Transfer System* (pending)

3.0 COMPLIANCE WITH REGULATORY REQUIREMENTS

The 4”-WTP-001-M17 and 3”-WTP-002-M17 were designed and installed to be compliant with WAC 173-303-640(4). The leak detection upgrades are designed to work with the existing system and be compliant with WAC 173-303-640(4). Table 2, addresses how the design and operation of the system meets WAC 173-303-640(4)(b), Tank systems, Containment and detection of releases, Secondary containment systems.

Table 2. Secondary Containment Compliance with WAC 173-303-640(4)(b)

WAC 173-303-640(4)(b)	How Regulatory Requirement is Satisfied
(b) Secondary containment systems must be:	
(i) Designed, installed, and operated to prevent any migration of wastes or accumulated liquid out of the system to the soil, groundwater, or surface water at any time during the use of the tank system; and	The 310/311 transfer pipelines were designed and installed to be fully encased with a secondary containment system that monitors for leakage and in the unlikely event of a leak, can fully contain and direct fluid from the primary pipeline to a compliant storage location (LERF basins). The system is operated per management-approved procedures that ensure all WAC regulations are met. The secondary containment is designed and installed to prevent the accumulation of liquid (sloped) and has been tested to ensure tightness. This system will ensure there is no migration of wastes to the soil, groundwater, or surface water.
(ii) Capable of detecting and collecting releases and accumulated liquids until the collected material is removed.	The system uses a thermal dispersion low point leak detector on both transfer pipeline encasements to monitor for leakage. If the leak detection system detects a leak, the 200 Area ETF shift manager will, verify the leak and direct shutdown of the aqueous waste through the transfer line(s). The pump located at WTP-EMF is shut down, stopping the flow of aqueous waste through the transfer pipeline. Any liquid that is collected in the encasement can be directed to a dangerous waste compliant storage area.
(c) To meet the requirements of (b) of this subsection, secondary containment systems must be at a minimum:	
(i) Constructed of or lined with materials that are compatible with the waste(s) to be placed in the tank system and must have sufficient strength and thickness to prevent failure owing to pressure gradients (including static head and external hydrological forces), physical contact with the waste to which it is exposed, climatic conditions, stress of installation, and the stress of daily operations	The 4”-WTP-001-M17 and 3”-WTP-002-M17 transfer pipelines are resistant to corrosion from the environment (outside in) and from the process condensates (inside out) by the chemical resistance of FRP. The same material (FRP) is used for the primary containment system and secondary containment system. The system was designed and installed to meet ASME B31.3. This ensures it has sufficient strength and thickness to prevent failure due to pressure gradients (including static head and external hydrological forces). During the design, a pressure transient analysis was performed to prove the ASME B31.3 requirements were met. Lastly, the transfer pipelines are buried to sufficient depths to prevent impacts from the climate (below frost line) and are sufficiently deep to preclude damage from vehicle traffic.

Table 2. Secondary Containment Compliance with WAC 173-303-640(4)(b)

WAC 173-303-640(4)(b)	How Regulatory Requirement is Satisfied
(including stresses from nearby vehicular traffic);	
(ii) Placed on a foundation or base capable of providing support to the secondary containment system, resistance to pressure gradients above and below the system, and capable of preventing failure due to settlement, compression, or uplift;	The transfer pipelines where installed on bedding that was compacted to ensure that it would support the system, be resistant to pressure gradients, and capable of preventing failure(s) due to settlement, compression, or uplift. The installation was reviewed by an Independent Qualified Registered Professional Engineer (IQRPE) and a construction assessment report HNF-17021, attests to the system being adequately designed and installed to prevent failure from structural loads.
(iii) Provided with a leak-detection system that is designed and operated so that it will detect the failure of either the primary or secondary containment structure or the presence of any release of dangerous waste or accumulated liquid in the secondary containment system within twenty-four hours, or at the earliest practicable time if the owner or operator can demonstrate to the department that existing detection technologies or site conditions will not allow detection of a release within twenty-four hours; and	The transfer pipeline design is pipe-in-pipe and was constructed with a leak detector and sight glass located at the LERF catch basins 42 and 43. Available sight glasses offer a secondary means to inspect for leaks, but the primary leak detection system is a highly reliable FCI FLT93s used as an electronic leak detector. Adequacy of leak detection system for the worst case scenario leak is documented in RPP-CALC-62638, "*WTP-Evaporator Transfer System Hydraulic Analysis"* which demonstrates that detection of a leak within 24 hours is dependent upon the leak rate and location along the transfer pipelines (refer to Table 5. Secondary Containment Leak Detection). RPP-CALC-62638 demonstrates that the leak detection system for the 4"-WTP-001-M17 and combined PC-5000/3"-WTP-002-M17 transfer pipelines are designed, installed, and will be operated to detect the presence of liquid in the secondary containment system at the earliest practicable time based on site conditions (location and rate of the leak).

Table 2. Secondary Containment Compliance with WAC 173-303-640(4)(b)

WAC 173-303-640(4)(b)	How Regulatory Requirement is Satisfied
(iv) Sloped or otherwise designed or operated to drain and remove liquids resulting from leaks, spills, or precipitation. Spilled or leaked waste and accumulated precipitation must be removed from the secondary containment system within twenty-four hours, or in as timely a manner as is possible to prevent harm to human health and the environment, if the owner or operator can demonstrate to the department that removal of the released waste or accumulated precipitation cannot be accomplished within twenty-four hours.	4”-WTP-001-M17 and combined PC-5000/3”-WTP-002-M17 transfer pipelines are designed and installed with a fully contained secondary containment systems to prevent harm to human health and the environment in the event of a transfer pipeline leak. The secondary containments are sloped to the LERF, which would allow any fluid to completely drain within 24 hours of the fluid being detected. The secondary containment is sized to completely contain the volume of the transfer pipelines.

3.1 Waste Compatibility

The waste characteristics and corrosion resistance of the PC-5000 transfer pipeline is addressed in RPP-RPT-60098, *2017 242-A Evaporator System Integrity Assessment*. The WTP process condensate transfer system corrosion resistance will be addressed in RPP-IQRPE-50056, *Integrity Assessment Report for the primary EMF to LERF Radiological Condensate Transfer System* (4”-WTP-001-M17); and RPP-IQRPE-50057, *Integrity Assessment Report for the backup EMF to LERF Radiological Condensate Transfer System* (3”-WTP-002-M17).

The process condensate streams are dilute aqueous solutions with ammonia, volatile organics, and trace quantities of radionuclides and inorganic constituents. The IQRPE reports are expected to conclude that the currently installed system and materials are resistant to the waste material for the design life of the system. The LERF has an approved RCRA compliant waste profile (see Table 3) that bounds the condensate profile, which protects the transfer pipelines form unanalyzed condensate streams.

3.1.1 Waste/Materials Interactions

FRP pipe and stainless steel (short section of stainless steel piping in the caisson) are inherently corrosion resistant by design. The process condensate streams are primarily water. Any corrosive components entrained in the process condensate are sufficiently dilute for the proposed operations to be of no concern. Acceptance of highly corrosive dissolved organics (such as ammonia) are strictly limited by the LERF and 200 Area ETF Permit, Addendum B, Table B.1 (refer to Table 3). These strict limits will ensure corrosion is prevented. To further reduce and prevent corrosion between waste transfers, the transfer pipelines are gravity drained to LERF. This prevents liquid from stagnating and ensures any corrosive constitutes are not left within the pipeline for unnecessary time durations.

Table 3. General Limits for Liner Compatibility

Source: LERF and 200 Area Permit, Addendum B, Table B.1

Chemical Family	Constituent(s) or Parameter(s)[1]	Limit[2] (sum of constituent concentrations)
Alcohol/glycol	1-butanol	500,000 mg/L 500,000 ppm
Alkanone[3]	acetone	200,000 mg/L 200,000 ppm
Alkenone[4]	none targeted	N/A
Aromatic/cyclic hydrocarbon	acetophenone, benzene, carbozole, chrysene, cresol, di-n-octyl phthalate, diphenylamine, isophorone, pyridine, tetrahydrofuran	2,000 mg/L 2,000 ppm
Halogenated hydrocarbon	arochlors, carbon tetrachloride, chloroform, hexachlorobenzene, lindane (gamma-BHC), hexachlorocyclopentadiene, methylene chloride, p-chloroaniline, tetrachloroethylene, 2,4,6-trichlorophenol	2,000 mg/L 2,000 ppm
Aliphatic hydrocarbon	none targeted	N/A
Ether	dichloroisopropyl ether	2,000 mg/L 2,000 ppm
Other hydrocarbons	acetontrile, carbon disulfide, n-nitrosodimethylamine, tributyl phosphate	2,000 mg/L 2,000 ppm
Oxidizers	none targeted	NA
Acids, Bases, Salts	ammonia, cyanide, anions, cations	100,000 mg/L 100,000 ppm
pH	pH	$0.5 < pH < 13.0$

[1] Analytical methods for the parameters and constituents are provided in Section B.8.
[2] Analytical data are evaluated using the following 'sum of the fraction' technique. The individual constituent concentration is evaluated against the compatibility limit for its chemical family. The sum of the evaluations must be less than 1. pH is not part of this evaluation.
[3] Ketone containing saturated alkyl group(s)
[4] Ketone containing unsaturated alkyl group(s)

Where 'i' is the number of organic constituents detected
mg/L = milligrams per liter
ppm = parts per million
NA = not applicable

Figure 5. Leak Detection Configuration at Basin 43

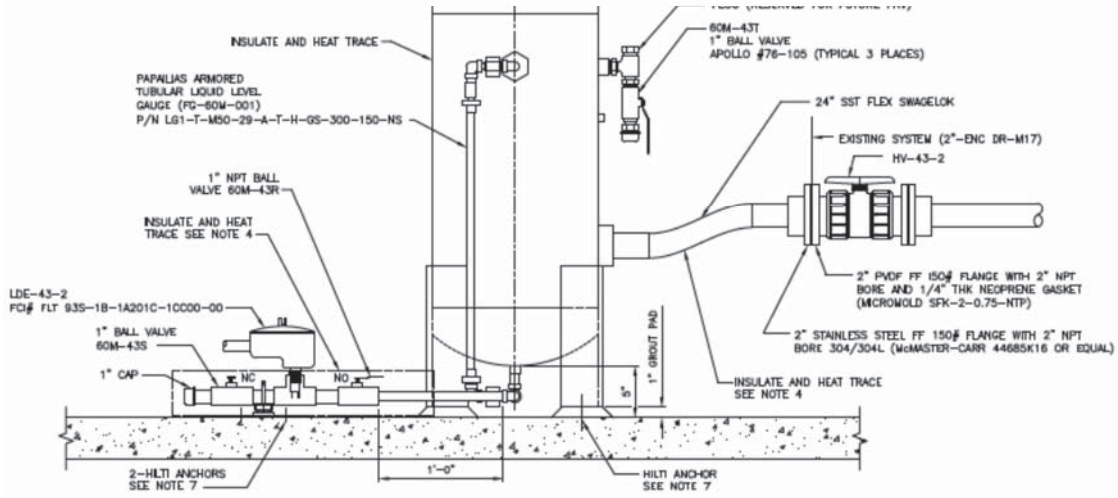

4.0 EVALUATION OF LEAK DETECTION METHODS

A single leak detector can have one of three desired traits. Estimation of a detected leak rate, detection of leaks over a large area or, the ability to detect where a leak originated. The optimal designs of leak detection systems have to weigh regulatory requirements, reliability, operating costs, maintainability, and constructability. Reference, EPA/530/UST-90/010 "Standard Test Procedures for Evaluating Leak Detection Methods".

The following leak detection methods were evaluated, and Table 4 provides a summary of the evaluation.

- Thermal dispersion leak detector
- Balancing methods of leak detection
- Acoustic emission leak detection
- Fiber-optic leak detection
- Conductivity leak detection
- Manned and unmanned video surveillance leak detection

Alternative leak detection methods were evaluated to see if industry practices have changed since the transfer pipelines were installed and the thermal dispersion style of leak detection was selected. In addition, a review was performed of other academic literature to aid with the selection criteria central to choosing a leak detection strategy for the transfer pipelines. The following documents were included in this review.

- EPA/530/UST-90/010, *Standard Test Procedures for Evaluating Leak Detection Methods Pipeline Leak Detection Systems (UST#45D)*

- EPA/600/S2-90/050, *Standard Test Procedures for Evaluating Leak Detection Methods: Pipeline Leak Detection Systems*

- *Technical Review of Leak Detection Technologies Aboveground Bulk Fuel Storage Tanks*, Alaska Department of Environmental Conservation.

Section 4 of *Technical Review of Leak Detection Technologies Aboveground Bulk Fuel Storage Tanks*, is very similar to the aim of this report. Section 4 gives detail about the engineering methods that should be used when selecting a leak detection system. The criteria listed were used when populating Table 4.

4.1 Selection of Leak Detection System

A review of the historical leak detection systems used on the PC-5000 transfer pipeline was performed. The "ribbon style" conductivity and multipoint style conductivity leak detectors had both faulted and could no longer be relied on (see Table 4 for more detail). Similar leak detectors with the capability to be installed along the length of 4"-WTP-001-M17, 3"-WTP-002-M17 and in MH-WT-01 were evaluated. It was identified that additional leak detectors would complicate or prevent the ability to drain the system because a series of dams would be needed to accumulate a detectable volume of liquid. A method to empty these dams from secondary containment would then be required. Additional infrastructure, for the multipoint leak detection and the piping infrastructure to empty the dams, would also be passed into the encasement creating more potential leak points, which reduces the integrity of the secondary containment and increases the risk to human health and the environment. See Table 4 for additional details. Lastly, the main benefit of multi-point leak detection is the ability to identify the leak location to aid a post leak repair. However, due to the age of the transfer pipelines, overall lack of reparability, and potential repair costs, depending on where the pipeline were to fail it is unlikely that a repair would be attempted, and instead new pipelines would be installed. For these reasons, leak detectors installed along the length of 4"-WTP-001-M17 and 3"-WTP-002-M17 and in MH-WT-01 were determined unsuitable.

Table 4. Leak Detector Selection Summary

Style[1]	Description	Pros	Cons	Deployable	Applicability	Effectiveness
Thermal dispersion leak detector	This leak detection tool is based on the principle of thermal dynamics and heat transfer. The thermal dispersion sensor is constructed using two highly sensitive resistance temperature devices (RTD) each housed separately and one housed with a small heater. At steady state, the temperature difference between the two RTDs will be fairly high due to air being a poor thermal conductor and the heaters energy being contained to the one housing. If a leak occurs and the housings are submerged, the heat is suddenly stripped from the heated housing and the RTD is cooled. This sudden change in differential temperature triggers the leak alarm.	• The WRPS workforce is proficient with installing, calibrating, and operating this style of leak detector. • The FCI FLT93S has an extremely low probability of fault alarm. • Used in the annulus of double shell tanks for safety significant level monitoring.	None	This style of leak detector is readily available and simple to deploy. Detector flexibility allows it to easily interface with existing Program Logic Controllers (PLC).	The thermal dispersion style leak detectors are used through-out the nuclear industry and are widely used in both safety significant and general service applications at Hanford. This style of leak detector is highly applicable.	Thermal dispersion leak detectors (FCI FLT93S) are highly effective. These instruments are used in many Hanford leak detection system applications. The detectors have a quick response time (few seconds) and are compatible with existing PLCs.
Balancing methods	These methods are based on the principle of conservation of mass. In the steady state, the mass flow entering a leak-free pipeline will balance the mass flow leaving it; any drop in mass leaving the pipeline (mass imbalance) indicates a leak. Balancing methods measure Mass Entering and Mass Exiting using flowmeters and finally compute the imbalance, which is an estimate of the leak rate. Comparing this imbalance (typically monitored over a number of periods) against a leak alarm threshold generates an alarm if this monitored imbalance reaches a pre-determined threshold.	• Affordable and can be used to monitor extremely long pipelines. • Mass balance is currently used to monitor tank-to-tank transfers using in tank level monitoring (ENRAFs). Although, it is not used for leak detection	• Incapable of detecting small leaks. • Requires routine precision calibration of instrumentation. • Impossible to perform manually if instrumentation is non-functional	The system currently has flow meters installed on both sides of the 310 transfer pipeline but not the 311 transfer pipeline. The current flow meters on either side are not accurate enough to support the balancing method of leak detection. A substantial system redesign would be required to implement this type of system.	This style of leak detection is applicable to longer transfer pipelines.	Balancing is an effective method of detecting gross leaks in very long transfer pipelines.
Acoustic emission detectors	Escaping fluids create an acoustic signal as they pass through a hole. Acoustic sensors affixed to the outside of the pipeline and establish a baseline acoustic "fingerprint" of the pipeline from the internal noise of the pipeline in its undamaged state. When a leak occurs, a resulting low frequency acoustic signal is detected and analyzed. Deviations from the baseline "fingerprint" signal an alarm.	• A handheld version of an acoustic emission detectors has been used successfully to help identify leaks in test equipment during pneumatic encasement pressure tests.	• Not practical for pipe-in-pipe applications. • Not currently used in Tank farms • Not practical for deployment post installation of pipeline • Typically used for gasses (not liquids) • New technology unproven in the nuclear industry. • Works best when the service being monitored is used continuously.	This system is not deployable in a transfer pipelines post install. Additionally, these systems are not intended for pipe-in-pipe application.	Not applicable to pipe-in-pipe	The acoustic emission detectors would not be effective for transfer pipelines of this length
Fiber-optic leak detection	Distributed Temperature Sensing (DTS) method involves the installation of a fiber-optic cable along the length of pipeline being monitored. The substances to be measured are exposed to the cable when a leak occurs, changing the temperature of the cable and changing the reflection of the laser beam pulse, signaling a leak. The location is known by measuring the time delay between when the laser pulse was emitted and when the reflection is detected. This only works if the substance is at a temperature different from the ambient environment. In addition, the distributed fiber-optical temperature-sensing technique offers the possibility to measure temperature along the pipeline. Scanning the entire length of the fiber, the temperature profile along the fiber is determined, leading to leak detection.	• Could be used over the full length of the transfer pipeline. • Newer technology that was unavailable in the past.	• Not practical for deployment post installation of pipeline • Requires the fluid to be a different temperature then the surrounding environment. • New technology unproven in the nuclear industry.	This system is not deployable post installation.	Transfer pipelines are buried underground; as such, the fiber-optic cable cannot be installed along the length of the pipelines. In addition, the DTS method would be considered new technology for tank farms; therefore, a significant level of testing would be required before system could be considered. For these reasons, this technology is not applicable.	New technology, too many unanswered questions to determine effectiveness/reliability in this application.

Table 4. Leak Detector Selection Summary

Style[1]	Description	Pros	Cons	Deployable	Applicability	Effectiveness
Conductivity	Digital sense cables consist of a braid of semi-permeable internal conductors protected by a permeable insulating molded braid. An electrical signal is passed through the internal conductors and is monitored by an inbuilt microprocessor inside the cable connector. Escaping fluids pass through the external permeable braid and make contact with the internal semi-permeable conductors. This causes a change in the electrical properties of the cable that is detected by the microprocessor. The microprocessor can locate the fluid to within a 1-metre resolution along its length and provide an appropriate signal to monitoring systems or operators. The sense cables can be wrapped around pipelines, buried sub-surface with pipelines or installed as a pipe-in-pipe configuration.	• Extremely simple • Currently installed in the 310/311 transfer pipelines. • Currently installed on Cross-site transfer pipeline	• High probability of fault alarms • Low reliability • Poor redundancy • Based on Cross-site and PC-5000 has short useful life. • Even after the Cross-site implemented a nitrogen purge they system still did not work properly. • Cannot be maintained after installation. • Operations has little to no confidence in these systems. • limited benefit to identifying leak origin.	Conductivity style leak detectors are simple, widely used and easily deployable during transfer pipeline installation. Replacement of a system that is currently installed would be difficult or could prove impossible.	Due to the frequency of fault alarms and lack of reliability when deployed on transfer pipelines, this style of leak detection was not pursued.	Ineffective due to extremely low reliability.
Video Surveillance (camera)	Video surveillance leak detection requires installation of video recording or video live streaming devices into the area in which a leak could be present. Lighting is required and some filtering of video stream can be used to further increase contrast. If the piping is insulated and the temperature of the liquid being detected is different than that of the surrounding environments are differing, inferred cameras could be used.	• Video surveillance is used at times in place of in-pit leak detection as an alternative to support double shell tank waste transfers. • The retrievals organization uses in tanks cameras to aid the retrieval process.	• Video surveillance requires dedicated operators to monitor the video. • Video surveillance would not be used as a primary means of continuous leak detection for routine transfers due to lack of reliability for long durations. • Requires electricity, lighting, and penetrations that are not easily sealed. • Relies on human interpretation. • Single Shell Tank retrieval has experienced many mechanical and electrical failures, where the repair results in radiological dose to the worker and project delays.	No power is currently available along the transfer pipeline route to support video surveillance. Therefore, a generator would be required to power video cameras. While cameras are easily deployable; cameras use throughout the tank farms has been for short durations because of poor reliability. Currently, there are no caisson penetrations that would support a camera.	Due to a lack of reliability and poor lighting, using video surveillance in the caisson, was determined to not be applicable.	Ineffective due to lighting and operator awareness. Due to the need for human involvement, detecting leaks could be subjective and lead to undetected leaks and/or fault detections.

[1] Source: *Technical Review of Leak Detection Technologies Aboveground Bulk Fuel Storage Tanks*, Section 4

5.0 FRP PIPELINE LEAK RATES AND FAILURE MODES

This section discusses FRP pipeline failure mechanism and compares them to the derived small leak postulated in RPP-CALC-62638, *WTP-Evaporator Transfer System Hydraulic Analysis.* It concludes that if a break were to occur it would be in a way that would produce a severe leak, which would far exceed the leak rates postulated in RPP-CALC-62638, and be detectable via low point leak detection within minutes of the leak beginning. FRP pipelines are highly resistant to failure due to a lack of corrosion however if a failure were to occur it would be readily detectable by the proposed low point thermal dispersion leak detection system.

The detection of a leak to secondary containment within 24-hours is dependent upon the leak rate and location along the 6,000 plus foot transfer pipelines. The capability of the secondary containment leak detection system for the worst-case scenario (farthest upstream point, node 8A/8B) is documented in RPP-CALC-62638. Table 5, from RPP-CALC-62638 provides the minimum leak detection rates for a leak, postulated at the furthest upstream point in the system, to be detected within 24 hours. This makes the calculations highly conservative.

Based on site conditions (location and rate of the leak) the magnitudes listed in Table 5 are reasonable. The calculation contains a recommendation by the author to perform field verification of the calculated leak rate by introducing water into the annular space and timing the duration for it to reach the LERF. However, the project does not intend on adding water to the encasement to confirm a conservative calculation with reasonable results. Historically, water additions to the annular space of transfer pipelines have proved to have negative long-term impacts. Due to this risk, water additions are avoided even if no negative long-term impacts are expected.

Table 5. Secondary Containment Leak Detection Rates

Source: RPP-CALC-62638, *WTP/Evaporator Transfer System Hydraulic Analysis*

Transfer Pipeline Segment	Encasement Size (in)	Leak rate (Gallons/Hour)	Total volume in 24hrs.
311 transfer pipeline: From Node 8B to LERF Catch Basin 43	6	1.66	39.8
310 transfer pipeline: From Node 8A to LERF Catch Basin 42	8	1.66	39.8

5.1 Pipeline Leak Probability

FRP pipes generally have a design life of 50 years. Resistance to corrosion in aggressive environments is one of the primary reasons FRP piping is used in general industrial and municipal systems. In all cases leaks in FRP piping occur due to improper installation or excessive internal/external stress. The only time post installation the pipeline will see high stress is during tightness testing. Therefore, no leaks are expected during operation. In the unlikely case a transfer pipeline becomes structurally degraded, it would likely be discovered during tightness testing (higher stress than normal operation) and detectable within minutes. Section 5.2 and 5.3 list the most common forms of FRP piping failures. All the creditable failure modes have a subsequent leak rate that would far exceed the 1.66 GPH postulated in RPP-CALC-62638.

5.2 Failure of FRP within Pipeline Segments (Away From A Joint)

- Piece blow out failure: A piece blow out failure is extremely uncommon and typically, due to manufacturing defect that would be identified when the piping is installed. If a manufacture defect was missed during installation then this failure could occur.
- Perforation failure: Perforations are extremely uncommon and typically, due to manufacturing defect that would be identified when the piping is being installed. If a manufacture defect was missed during installation then this failure could occur.
- Circumferential breaks: Circumferential breaks are caused by excessive longitudinal stress. They typically happen at fittings and are linked to a lack of lateral pipeline support that does not control stress. Typically, this type of failure happens is large diameter piping. This failure would be identified during pressure testing or high flow rate testing; but is unlikely to happen in 3 inch and 4 inch FRP.
- Longitudinal Split: Longitudinal splits are caused by excessive uneven force applied to the external of pipeline such as large loads applied from above. They typically happen in straight sections that pass under areas where above ground loads are added. This failure is not practicable for the 4”-WTP-001-M17 and 3”-WTP-002-M17 transfer pipelines because the internal pipe is not in contact with the soil.
- Pipe Wall Ruptures/Tears: Pipe Wall Ruptures/Tears are caused by excessive internal pressure that ruptures the pipeline due to high hoop stress (the stress around the circumference of the pipe due to internal pressure pushing outward). These failures are uncommon in FRP because fibers are strong in tension and able to resist hoop stress. This system design pressure for Bondstand 4000 has a safety factor (difference between design pressure and pressure rating) of three that ensures the hoop stress is maintained well within safe ranges.

5.3 Failure of FRP Pipeline at Joint

- Leaking Joint: A leaking joint failure occurs due to improper installation. This failure type would have been identified during the ASME B31.3 code pressure testing, during installation of the transfer pipelines. This is the only creditable “small” leak that could prove difficult to detect with-in 24-hrs but are not typically seen in FRP pipelines after installation/initial testing.
- Joint Separation: Joint Separation like pipe wall ruptures/tears are caused by excessive internal pressure and/or improper installation. This failure would produce a large leak that is detectable within minutes of occurring, and would be identified during pressure testing.

6.0 TRANSFER PIPELINE TIGHTNESS TESTING AND INTEGRITY ASSESSMENTS

The 4”-WTP-001-M17 and 3”-WTP-002-M17 transfer pipelines had an initial design and installation IQRPE assessment and have a pending integrity assessment underway. The PC-5000 transfer pipeline has been subject to multiple IQRPE reviews over the time it has been installed and operated. In all cases, these reviews have had favorable outcomes with recommendations of fitness for use. This section lists these past and current reviews to demonstrate systems compliance as recognized by the IQRPE.

6.1 4”-WTP-001-M17 and 3”-WTP-002-M17 Tightness Testing and Integrity Assessments

The 4”-WTP-001-M17 and 3”-WTP-002-M17 installation was previously certified by an IQRPE and documented in the Liquid Effluent Transfer System, Project W-519, Construction Integrity Assessment Report (W-519-IAR-C) dated June 25, 2001.

An independent assessment was performed in 2003 and is documented in HNF-17201, *Liquid Effluent Transfer System Project W-519 Installation Assessment Report*. The 310/311 transfer system was known as the Liquid Effluent Transfer System (LETS).

Per HNF-17201:

> “During initial installation, tightness testing was conducted in accordance with pipe codes M-17 and P-1 of the Project W-519 performance specification (W-519-P1, Appendix A). The primary FRP transfer pipelines were hydrostatically tested to a minimum pressure of 150 psi gauge (at 120°F). The secondary containment pipelines were pneumatically tested to a minimum pressure of 10 psi gauge (at 120°F). Additionally, valves were leak tested. On completion of the joining of the existing line to the new line, the joint was vacuum tested.”

Two new integrity assessments are being drafted and will be provided to Ecology prior to final release. These new integrity assessments will include IQPRE witness of integrity testing for the 4”-WTP-001-M17 and *3”-WTP-002-M17* transfer pipelines.

- RPP-IQRPE-50056, *Integrity Assessment Report for the primary EMF to LERF Radiological Condensate Transfer System (4”-WTP-001-M17)*
- RPP-IQRPE-50057, *Integrity Assessment Report for the backup EMF to LERF Radiological Condensate Transfer System (3”-WTP-002-M17)*

6.2 PC-5000 Tightness Testing and Integrity Assessments

The PC-5000 process condensate transfer primary pipeline was hydrostatically tested in 2017. During this test, upstream components and the encasement drain located at the LERF were observed for signs of leakage. The 2017 hydrostatic test was performed and concluded the following:

> “PC-5000 Hydrostatic Test: This test was conducted on November 8, 2017, and involved pressurizing the PC-5000 condensate drain line between the 242-A Evaporator and the LERF to verify no leaks are present. The transfer line was pressurized to 50 psi and held for 2 hours. The final pressure was reported to be 48 psi, within the set test parameters.”

Based on these finding, RPP-RPT-60098 concludes:

> "The PC-5000 line has a remaining life expectancy of 27 years, but that almost certainly could be extended based on waste compatibility. A new life expectation study should be completed within the next 27 years, either as part of the next [integrity assessment report] IAR or separately."

Other reports that have found the PC-5000 transfer pipeline to be structurally sound and leak tight include:

Document Number	Title	Published
WHC-SD-WM-ER-112	*Integrity Assessment Report for 242-A Evaporator/LERF Waste Transfer Piping*	1993
RPP-RPT-33307	*IQRPE Integrity Assessment Report for the 242-A PC-5000 Transfer Pipeline*	2007
IAR PC-5000, Rev. 0	*PC-5000 Drain Line Modifications Independent Integrity Assessment Report*	2010
RPP-RPT-46117	*Independent Integrity Assessment Report for 242-A PC-5000 Drain Line Modifications*	2012

7.0 CONCLUSION

This report demonstrates that the leak detection system for the 4"-WTP-001-M17 and the combined PC-5000/3”-WTP-002-M17 transfer pipelines are designed, installed, and operated to detect the presence of liquid in the secondary containment system at the earliest practicable time based on site conditions (location and rate of the leak). As such, this report satisfies the 242-A Evaporator Permit Condition III.4.C.1, and the LERF and 200 Area ETF Permit Condition III.3.J.2.

In development of this report several alternative leak detection configurations, methods, and strategies were reviewed, including continuous/multipoint conductivity, video surveillance, and emerging technologies (refer to Table 4). In addition, a review was performed of other academic literature (see section 4.0) to aid with the selection criteria central to choosing a leak detection strategy for the transfer pipelines.

The reviews and studies concluded that the thermal dispersion (FCI FLT93S) low point leak detector is the ideal leak detection strategy/technology for these transfer pipelines. When considering site conditions (location and rate of the leak) and historical data, the use of a thermal dispersion (FCI FLT93S) low point leak detector best meets WAC 173-303 requirements; and delivers a leak detection system that is deployable, maintainable, reliable, and effective at quickly detecting leaks.

A review of FRP pipeline failure mechanisms (Section 5.0) shows if the primary pipeline were to fail, the failure would most likely occur during tightness testing, and cause a rupture and subsequently large leak that would be detectable within moments at the low point leak detector. Section 4.0 and Table 4. Leak Detector Selection Summary discuss alternative leak detection methods, includes an academic review of leak detection technologies, and explanation for why the thermal dispersion style leak detector was ultimately selected.

8.0 REFERENCES

ANSI/ASME B31.3, 1987, *Chemical Plant and Petroleum Refinery Piping*, American National Standards Institute, New York, New York.

ASTM D-2996, *Standard Specification for Filament-Wound "Fiberglass''* (Glass-Fiber-Reinforced Thermosetting-Resin) Pipe, American Society for Testing and Materials, West Conshohocken, Pennsylvania.

ASTM D-2997-90, *Standard Specification for Centrifugally Cast "Fiberglass"* (Glass-Fiber-Reinforced Thermosetting-Resin) Pipe, American Society for Testing and Materials, West Conshohocken, Pennsylvania.

H-2-88766, Sht. 1, "P&ID LERF Basin & ETF Influent Evaporator," Rev. 14, U.S. Department of Energy, Richland, Washington.

H-2-88766, Sht. 2, "P&ID LERF Basin & ETF Influent Evaporator," Rev. 14, U.S. Department of Energy, Richland, Washington.

H-2-88766, Sht. 3, "P&ID LERF Basin & ETF Influent Evaporator," Rev. 19, U.S. Department of Energy, Richland, Washington.

H-2-88766, Sht. 4, "P&ID LERF Basin & ETF Influent Evaporator," Rev. 20, U.S. Department of Energy, Richland, Washington.

H-2-88766, Sht. 5, "LERF-WTP Interface," Rev. 2, U.S. Department of Energy, Richland, Washington.

RPP-CALC-62638, "WTP-Evaporator Transfer System Hydraulic Analysis," Rev. 0, Washington River Protection Solutions, LLC, Richland, Washington.

RPP-RPT-33306, 2007, *IQRPE Integrity Assessment Report for the 242-A Evaporator System,* TechnoGeneral Services, Inc., Richland, Washington.

RPP-RPT-33307, 2007, *IQRPE Integrity Assessment Report for the 242-A PC-5000 Transfer Pipeline*, Rev. 0, CH2MHILL Hanford Group, Inc. Richland, Washington.

RPP-RPT-46117, 2012, *Independent Integrity Assessment Report for 242-A PC-5000 Drain Line Modifications,* Rev. 1, Washington River Protection Solutions, LLC (WRPS), Richland, Washington.

RPP-RPT-60098, 2018, *242-A Evaporator System Integrity Assessment,* Rev. 0, Washington River Protection Solutions, LLC, Richland, Washington.

W-519-IAR-DESIGN, 2001, *Liquid Effluent Transfer System, Project W-519, Design Integrity Assessment Report*, Revision 0, ChemMet, Ltd., PC, West Richland, Washington.

HNF-17021, 2003, *Liquid Effluent Transfer System Project W-519 Installation Assessment Report,* Rev 0, Fluor Hanford, Richland, Washington

Washington Administrative Code, WAC 173-303, 2019, *Dangerous Waste Regulations*, Washington State Department of Ecology, Olympia, Washington.

Washington Administrative Code, WAC 173-303-640(2), *Dangerous Waste Regulations*, Washington State Department of Ecology, Olympia, Washington.

Washington State Department of Ecology Publication 95-420, 1995, *Guidance for Assessing Dangerous Waste Secondary Containment Systems*, Washington State Department of Ecology, Olympia, Washington.

Washington State Department of Ecology Publication 95-420, *Guidance for Assessing and Certifying Tank Systems that Store and Treat Dangerous Waste*, Washington State Department of Ecology, Kennewick, Washington.

Washington State Department of Ecology Publication No. 94-114. 1994, *Guidance for Assessing and Certifying Tank Systems that Store and Treat Dangerous Waste*, Washington State Department of Ecology, Olympia, Washington.

Washington State Department of Ecology WA7890008967, 2005, *Hanford Facility Resource Conservation and Recovery Act Permit for the Treatment, Storage and Disposal of Dangerous Waste*, Washington State Department of Ecology, Olympia, Washington and U.S. Environmental Protection Agency Region 10, Seattle, Washington.

8.1 Future References

RPP-IQRPE-50056, *Integrity Assessment Report for the Primary EMF to LERF Radiological Condensate Transfer System (4”-WTP-001-M17)*

RPP-IQRPE-50057, *Integrity Assessment Report for the Backup EMF to LERF Radiological Condensate Transfer System (3”-WTP-002-M17)*