START

171

0026836

SUPPORTING DOCUMENT

1. Total Pages 175

2. Title	3. Number	4. Rev No.
Borehole Completion Data Package for Wells 199-N-75, 199-N-76, and 199-N-77	WHC-SD-EN-DP-056	0

5. Key Words

BOREHOLE COMPLETION; MONITORING WELLS; 100-N AREA; GROUNDWATER MONITORING

APPROVED FOR PUBLIC RELEASE

3/18/93 D. Delis

6. Author

Name: M.J. Hartman

Mary J Hartman 24 Feb-93

Signature

Organization/Charge Code 81235/R4GD1

7. Abstract

Wells N-75, N-76, and N-77 were drilled in 1992 as RCRA groundwater monitoring wells in the 100-N Area of the Hanford Site. The data package includes information on drilling, construction, development, and aquifer testing. Data interpretation is limited to aquifer testing and depths of the Hanford/Ringold contact.

8. PURPOSE AND USE OF DOCUMENT - This document was prepared for use within the U.S. Department of Energy and its contractors. It is to be used only to perform, direct, integrate under U.S. Department of Energy contracts. This document is not approved for public release until reviewed.

PATENT STATUS - This document copy, since it is transmitted in advance of patent issuance, is made available in confidence solely for use in performance of work under contracts with the U.S. Department of Energy. This document is not to be published nor its contents otherwise disseminated or used for purposes other than specified above before patent approval for such release or use has been secured, upon request, from the Patent Counsel, U.S. Department of Energy Field Office, Richland, WA.

DISCLAIMER - This report was prepared as an account of work sponsored by an agency of the United States Government. Neither the United States Government nor any agency thereof, nor any of their employees, nor any of their contractors, subcontractors or their employees, makes any warranty, express or implied, or assumes any legal liability or responsibility for the accuracy, completeness, or any third party's use or the results of such use of any information, apparatus, product, or process disclosed, or represents that its use would not infringe privately owned rights. Reference herein to any specific commercial product, process, or service by trade name, trademark, manufacturer, or otherwise, does not necessarily constitute or imply its endorsement, recommendation, or favoring by the United States Government or any agency thereof or its contractors or subcontractors. The views and opinions of authors expressed herein do not necessarily state or reflect those of the United States Government or any agency thereof.

9. Impact Level 3Q

10. RELEASE STAMP

OFFICIAL RELEASE BY WHC (20)
DATE MAR 18 1993
Sta. 21

9313090.0294

MAR 1993 RECEIVED EDMC

A-6400-073 (11/91) (EF) WEF124

THIS PAGE INTENTIONALLY
LEFT BLANK

CONTENTS

1.0 INTRODUCTION 1

2.0 WELL 199-N-75 3
2.1 Drilling 3
2.2 Well Completion 4
2.3 Well Development and Pump Installation 4
2.4 Aquifer Testing 5

3.0 WELL 199-N-76 5
3.1 Drilling 5
3.2 Well Completion 6
3.3 Well Development and Pump Installation 6
3.4 Aquifer Testing 6

4.0 WELL 199-N-77 6
4.1 Drilling 7
4.2 Well Completion 7
4.3 Well Development and Pump Installation 8
4.4 Aquifer Testing 8

5.0 REFERENCES 8

9313090.0295

APPENDICES

A Drilling and Construction Data A-1
B Sediment Sample Data B-1
C Well Development and Pump Installation C-1
D Aquifer Tests D-1

FIGURE

1 Location of Wells 199-N-75, 199-N-76, 199-N-77 2

TABLE

1 Survey Data for Groundwater Monitoring Wells Installed in the 100-N Area in 1992 3

9313090.0296

1.0 INTRODUCTION

Three new groundwater monitoring wells were installed in the 100-N Area in 1992 in support of the *Hanford Federal Facility Agreement and Consent Order* (Ecology et al. 1989) (Tri-Party Agreement) milestones M-24-21 and M-24-22. Wells 199-N-75 and 199-N-76 will serve as downgradient monitoring wells for the 1301-N Liquid Waste Disposal Facility. They are completed at the top of the uppermost aquifer. Well 199-N-77 is a downgradient well for the 1324-N/NA site, completed at the base of the uppermost aquifer. The locations of these wells are illustrated in Figure 1. Coordinates and elevations are listed in Table 1. For convenience, well numbers are often shortened by dropping the "199-" prefix.

The groundwater monitoring plan for the 100-N RCRA sites (Hartman 1991) describes the hydrogeology of the 100-N Area, and provides justification for the new wells and their locations. The wells were constructed to the specifications described by WHC (1992).

This document is a compilation of data and information on drilling, construction, and development of the new wells. Copies of forms, notes, and diagrams completed in the field comprise the bulk of this document. Few interpretations are included. Lithologic contacts were picked by Westinghouse Hanford Company scientists and the site geologists. Aquifer test data were interpreted to estimate aquifer properties. Spectral gamma-ray logs were analyzed to determine radionuclide activity versus depth.

The following are included in appendices:

Appendix A:
- Well construction report
- Borehole log
- Geophysical log(s)

Appendix B:
- Grain size data for screened interval
- $CaCO_3$ and moisture data

Appendix C:
- Well development record and water level data
- Pump installation record

Appendix D:
- Drawdown and recovery data
- Slug test data
- Aquifer test analysis

Chain of custody forms, decontamination records, daily field records, and training records are maintained by WHC.

9313090.0297

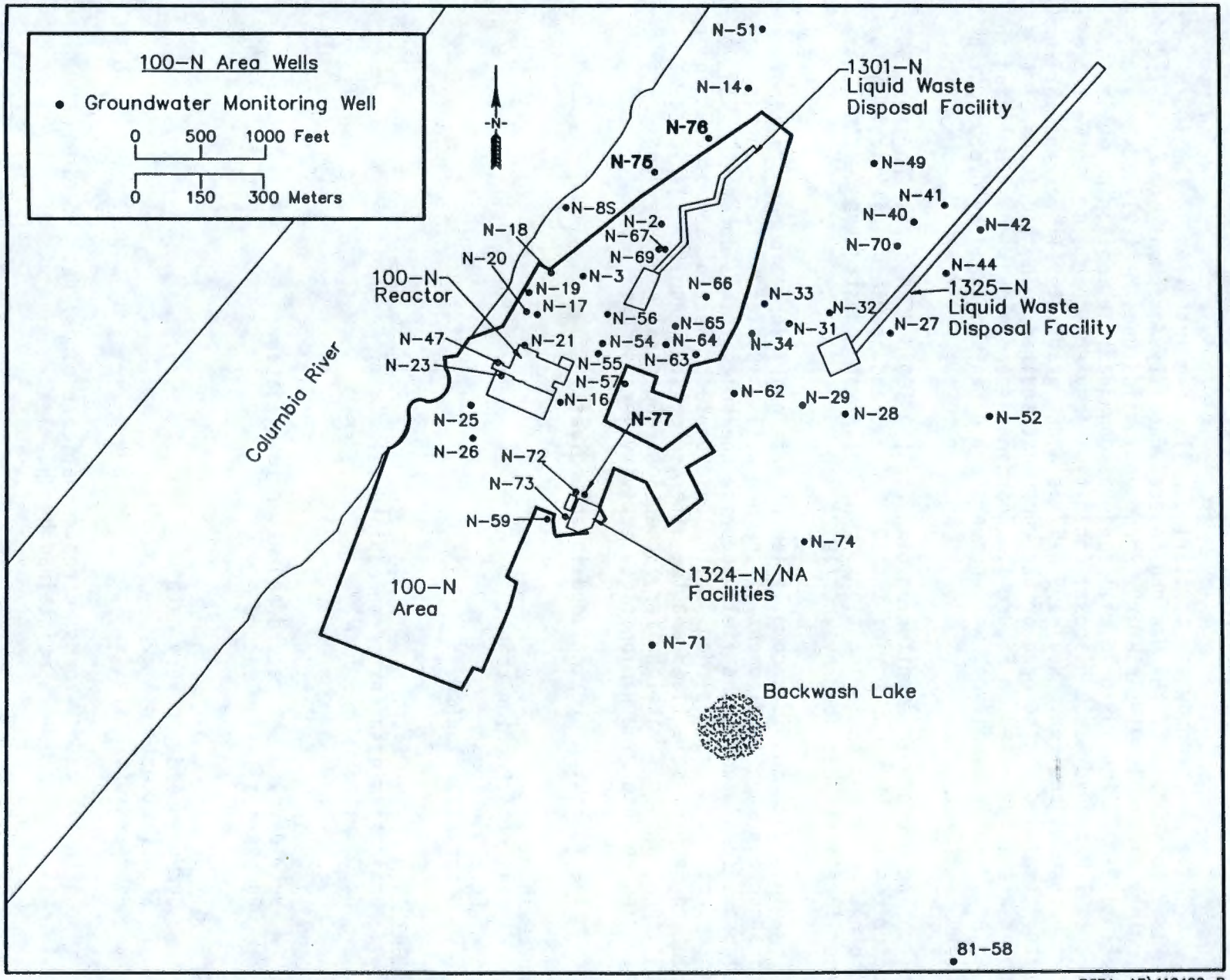

Figure 1. Location of Wells 199-N-75, 199-N-76, and 199-N-77.

Table 1. Survey Data for Groundwater Monitoring Wells Installed in the 100-N Area in 1992.

Well	Datum or coordinate system[a]	Coordinates center of casing	Elevations (feet)[b]		
			Brass marker in concrete	Top Hydrostar[c] plate north side	Top outer casing north side
N-75	100-N	N 8266.0 W 6214.4	453.10[d]	456.26[d]	456.24[d]
	Hanford	N 87,235.4 W 60,149.7	N/A	N/A	N/A
	Lambert or NGVD'29	N 150,060.72 E 571,523.58	453.64	456.80	456.78
N-76	100-N	N 8498.2 W 6182.2	448.29[d]	451.60[d]	451.58[d]
	Hanford	N 87,436.51 W 60,029.33	N/A	N/A	N/A
	Lambert or NGVD'29	N 150,622.12 E 571,560.08	448.83	452.14	452.12
N-77	100-N	N 5521.9 W 5819.8	455.21[d]	458.91[d]	458.90[d]
	Hanford	N 84,555.2 W 60,858.7	N/A	N/A	N/A
	Lambert or NGVD'29	N 149,243.21 E 571,309.93	455.75	459.45	459.44

[a]Lambert WCS83S coordinates in meters. 100-N coordinates in feet. Hanford coordinates (in feet) were converted from 100-N coordinates with the formulae: Hanford West = 57,659.1 + (100-N West)(cos 23°) - (100-N North)(sin 23°)
Hanford North= 77,198.3 + (100-N West)(sin 23°) + (100-N North)(cos 23°)

[b]NGVD'29 elevations in feet above the National Geodetic Datum of 1929; 100-N elevations in feet above mean sea level.

[c]A trademark of Instrumentation Northwest Inc.

[d]Elevations to 100-N datum were converted from NGVD'29 by subtracting 0.54 ft. Wells N-71, N-72, N-73, and N-74 were surveyed to both datums and the difference was 0.54 ft (Hartman 1992).

N/A = not applicable.

2.0 WELL 199-N-75

Construction, geology, geophysical, and physical testing for well N-75 are described in the appendices.

2.1 DRILLING

Well N-75 was drilled with a cable-tool rig. Drilling began April 13, 1992, and was completed April 29, 1992, at a total depth of 89.6 ft below land surface (bls). Temporary, carbon steel casing was used during drilling: 12-in-dia casing from surface to 20 ft bls; 10-in-dia casing from surface to total depth. A backhoe was used to set the first 9.5 ft of temporary casing. No water was added during drilling. See drilling information in Appendix A.

9313090.0299

12-in-dia casing from surface to 20 ft bls; 10-in-dia casing from surface to total depth. A backhoe was used to set the first 9.5 ft of temporary casing. No water was added during drilling. See drilling information in Appendix A.

The borehole and soils were monitored regularly for organic vapors and radioactive contaminants. Radioactive contamination was detected from 50 ft bls to total depth. In the uncontaminated zone, samples were collected approximately every 5 ft of depth for calcium carbonate analysis, moisture content, radiological screening, and lithologic archiving. Samples were not retained in the contaminated zone; the geologist's descriptions are based on visual observation of cuttings. Split-tube samples were collected for chemical and radiological analysis at the following depths: 2 to 3 ft; 5 to 6 ft; 9 ft; 56 to 58 ft; and 68 to 70 ft. Data will be presented in an addendum to this report following their interpretation.

Sediments were primarily sandy gravel (see borehole log in Appendix A). The contact between the Hanford and Ringold formations appears to be at approximately 44 ft bls.

A gross gamma log was run on April 29, 1992, from 3 to 68 ft bls, through the temporary casing. A spectral gamma log was run on May 1, 1992, through the temporary casing. Geophysical logs are in Appendix A.

9313090.0300

2.2 WELL COMPLETION

Permanent casing and screen were installed in well N-75 between May 4 and 6, 1992. Static water level at that time was 68.7 ft bls. A 10-slot, 4-in-dia stainless steel screen was set from 84.5 to 64.4 ft bls. Permanent casing is 4-in-dia stainless steel with centralizers, from 64.4 ft bls to above land surface. The sand pack is 20-40 mesh silica sand (89.5 to 59.1 ft bls). The annular seal comprises bentonite pellets (59.1 to 54.9 ft bls), bentonite crumbles (54.9 to 9.5 ft bls), and cement grout (9.5 to 2.0 ft bls). The remaining annulus was filled with concrete when a 4 ft by 4 ft by 6-in. concrete pad was installed at the well head. A 6-in. protective casing with a locking cap was also installed at the well head. Four protective steel posts were set in concrete around the well. A brass marker stamped with the well number was set into the concrete. The center line of the well was surveyed to Lambert and 100-N coordinates. Elevation was surveyed to NGVD'29. Elevations were established for the top of the Hydrostar plate (a trademark of Instrumentation Northwest, Inc.), the top of outer casing (north side), and the brass marker set in the concrete pad. Documentation of well completion is compiled in Appendix A.

The only additive during well drilling and completion was "well guard," a non-petroleum-based lubricant used on casing threads and drilling tools.

2.3 WELL DEVELOPMENT AND PUMP INSTALLATION

Well N-75 was developed July 7, 1992. A submersible pump was used to remove 1,438 gal water from the well. Final turbidity was 2.1 nephelometric turbidity units (NTU). Discharged water was collected in a regulated purge truck due to potential radioactive contamination. Drawdown and recovery data were measured with a transducer in the pumping well during development.

A well development log is included in Appendix C. Water level data from development and recovery are included in Appendix D.

A dedicated Hydrostar sampling pump was installed in well N-75 on July 13, 1992. Its intake is at 82.2 ft below top of casing. A pump installation form is included in Appendix C.

2.4 AQUIFER TESTING

Water level data were collected during development, as described in Section 2.3, but hydraulic conductivity could not be determined. A slug injection and withdrawal test was also conducted in well N-75 on July 13, 1992, after development. Hydraulic conductivity of the screened interval was estimated at 62 ft/d. Aquifer test data and their interpretation are included in Appendix D.

9313090.0301

3.0 WELL 199-N-76

Construction, geology, geophysical, and physical testing for well N-76 are described in the appendices.

3.1 DRILLING

Well N-76 was drilled with a cable-tool rig. Drilling began April 13, 1992, and was completed April 28, 1992, at a total depth of 84.5 ft bls. Temporary, carbon steel casing was used during drilling: 12-in-dia casing from surface to 19.7 ft bls; 10-in-dia casing from surface to total depth. Approximately 6 gal of water were added during drilling. Drilling information is compiled in Appendix A.

The borehole and soils were monitored regularly for organic vapors and radioactive contaminants. Radioactive contamination was detected from 53 to 72 ft bls. In the uncontaminated zones, samples were collected approximately every 5 ft of depth for calcium carbonate analysis, moisture content, radiological screening, and lithologic archiving. Samples were not retained in the contaminated zone; the geologist's descriptions are based on visual observation of cuttings. Split-tube samples were collected for chemical and radiological analysis at the following depths: 2 to 3 ft; 5 to 6 ft; 24 to 25 ft; 55 to 57 ft; and 64.5 to 66.5 ft. Data will be presented in an addendum to this report following their interpretation.

Sediments were primarily sandy gravel to sand (see borehole log in Appendix A). The contact between the Hanford and Ringold formations appears to be at approximately 29 ft bls.

A gross gamma log was run on April 28, 1992, from 0.8 to 82.5 ft bls, through the temporary casing. A spectral gamma log was run in December 1992, after the well was completed. Geophysical logs are in Appendix A.

3.2 WELL COMPLETION

Permanent materials were installed in well N-76 between April 29, and May 5, 1992. Static water level at that time was 63.2 ft bls. A 10-slot, 4-in-dia stainless steel screen was set from 81.4 to 61.0 ft bls. Permanent casing is 4-in-dia stainless steel with centralizers, from 61.0 ft bls to above land surface. The sand pack is 20-40 mesh silica sand (83.3 to 53.9 ft bls). The annular seal comprises bentonite pellets (53.9 to 50.6 ft bls), bentonite crumbles (50.6 to 8.0 ft bls), and cement grout (8.0 to 2.0 ft bls). The remaining annulus was filled with concrete when a 4 ft by 4 ft by 6-in. concrete pad was installed at the well head. A 6-in. protective casing with a locking cap was also installed at the well head. Four protective steel posts were set in concrete around the well. A brass marker stamped with the well number was set into the concrete. The center line of the well was surveyed to Lambert and 100-N coordinates. Elevation was surveyed to NGVD'29. Elevations were established for the top of the Hydrostar plate, the top of outer casing (north side), and the brass marker set in the concrete pad. Documentation of well completion is compiled in Appendix A.

The only additives during well drilling and completion were water and "well guard," a non-petroleum-based lubricant used on casing threads and drilling tools.

9313090.0302

3.3 WELL DEVELOPMENT AND PUMP INSTALLATION

Well N-76 was developed July 2, 1992. A temporary submersible pump was used to remove 1,958 of gal water from the well, until the turbidity was 4.2 NTU. Drawdown and recovery data were measured with a transducer in the pumping well during development. A well development log is included in Appendix C. Water level data from development and recovery are included in Appendix D.

A Hydrostar sampling pump was installed in well N-76 on July 9, 1992. Its intake is at 80.6 ft below top of casing. A pump installation form is included in Appendix C.

3.4 AQUIFER TESTING

Water level data were collected during development, as described in Section 3.3. Transmissivity of the screened interval was estimated at 1,200 ft^2/d, based on discharge data. This value correspond to a hydraulic conductivity of 64 ft/d. A slug injection and withdrawal test was conducted in well N-76 on July 9, 1992, after development. Hydraulic conductivity of the screened interval was estimated at 73 ft/d. Aquifer test data and their interpretation are included in Appendix D.

4.0 WELL 199-N-77

Construction, geology, geophysical, and physical testing for well N-77 are attached in the appendices.

4.1 DRILLING

Well N-77 was drilled with an air-rotary rig. Drilling began July 30, 1992, and was completed September 25, 1992 at a total depth of 103 ft bls. Temporary carbon steel casing was used during drilling: 12-in-dia casing from surface to 9.2 ft bls; 10-in-dia casing from surface to 100.4 ft bls. No water was added during drilling. Drilling information is compiled in Appendix A.

The borehole and soils were monitored regularly for organic vapors and radioactive contaminants. No contamination was detected. Samples were collected approximately every 5 ft of depth for calcium carbonate analysis, moisture content, radiological screening, and lithologic archiving. However, the samples were stolen before they could be transported to the physical testing laboratory. Additional samples were collected for chemical and radiological analysis at the following depths: 23 to 25 ft; 38 to 40 ft; 5 to 52 ft; 63 to 65 ft; 70 to 72 ft. The data and their interpretation will be presented in an addendum to this report.

At a depth of 25 ft, the geologist noted the presence of oil on the split spoon sample, and stopped drilling activities as documented in nonconformance report #050008. The oil was traced to the air compressor on the drill rig. Corrective actions were taken as follows: (a) the compressor and its filter were repaired; (b) air lines and drill piping were decontaminated; and (c) the borehole was advanced to 38 ft and another sediment sample was collected for analysis. Results of organic analyses of the 38-ft sediment sample and additional, deeper samples provide no apparent evidence of contamination in the filter pack interval of the well. The nonconformance report was closed out and the well was accepted as suitable for use as a monitoring well.

Sediments in well N-77 were primarily gravel, sandy gravel, and sand (see borehole log in Appendix A). The borehole tagged a silty clay layer that forms the bottom of the aquifer at 97 ft bls. The contact between the Hanford and Ringold formations appears to be at approximately 45 ft bls.

A gross gamma log was run on October 12, 1992, and April 1992 from 3.9 to 93.4 ft bls, through the temporary casing. Geophysical logs are in Appendix A.

4.2 WELL COMPLETION

Permanent materials were installed in well N-77 on October 13, and 14, 1992. Static water level at this time was 67.9 ft bls. From total depth to 98.1 ft bls the hole is filled with sloughed formation. A bentonite chunk seal was placed from 98.1 to 94.9 ft bls. A 10-slot, 4-in-dia stainless steel screen was set from 94.6 to 84.4 ft bls. Permanent casing is 4-in-dia stainless steel with centralizers, from 84.4 to above land surface. The sand pack is 20-40 mesh silica sand (94.9 to 79.4 ft bls).

The annular seal comprises bentonite chunks (79.4 to 64.7 ft bls), bentonite crumbles (64.7 to 8.0 ft bls), and cement grout (8.0 to 1.0 ft bls). The remaining annulus was filled with concrete when a 4 ft by 4 ft by 6-in. concrete pad was installed at the well head. A 6-in. protective casing with a

9313090.0303

locking cap was also installed at the well head. Four protective steel posts were set in concrete around the well. A brass marker stamped with the well number was set into the concrete. The center line of the well was surveyed to Lambert and 100-N coordinates. Elevation was surveyed to NGVD'29. Elevations were established for the top of the Hydrostar plate, the top of outer casing (north side), and the brass marker set in the concrete pad. Well completion documents are compiled in Appendix A.

The only additives during well drilling and completion were the following non-petroleum-based lubricants: "well guard," used on casing threads and drilling tools, and RN-D Rock Oil (a trademark of Jet Lube, Inc.), used on the down-hole hammer. As noted above, oil from the air compressor entered the borehole at 25 ft bls.

4.3 WELL DEVELOPMENT AND PUMP INSTALLATION

Well N-77 was developed November 18, 1992. A temporary submersible pump was used to remove 1,145 gal water from the well, until the turbidity was 4 NTU. Drawdown and recovery data were measured with a transducer in the pumping well during development. A well development log is included in Appendix C. Water level data from development and recovery are included in Appendix D.

A Hydrostar sampling pump was installed in well N-77 on November 18, 1992. Its intake is at 94.3 ft below top of casing. A pump installation form is included in Appendix C.

4.4 AQUIFER TESTING

Water level data were collected during development, as described in Section 4.3, but hydraulic conductivity could not be determined. A slug injection and withdrawal test was conducted in well N-77 after development. Hydraulic conductivity of the screened interval was estimated at 35 ft/d for slug injection and 57 ft/d for slug withdrawal. Aquifer test data and their interpretation are included in Appendix D.

6.0 REFERENCES

Ecology, EPA, and DOE 1989, *Hanford Federal Facility Agreement and Consent Order*, Washington State Department of Ecology, U.S. Environmental Protection Agency, U.S. Department of Energy, Olympia, Washington.

Hartman, M. J., 1991, *Groundwater Monitoring Plan for the 1301-N, 1324-N/NA, and 1325-N Facilities*, WHC-SD-EN-AP-038, Westinghouse Hanford Company, Richland, Washington.

Hartman, M. J., 1992, *Borehole Completion Data Package for Wells N-71, N-72, N-73, and N-74*, WHC-SD-EN-DP-040, Westinghouse Hanford Company, Richland, Washington.

WHC, 1992, *Generic Specifications-Groundwater Monitoring Wells*, WHC-S-014, Rev. 7, Westinghouse Hanford Company, Richland, Washington.

9313090.0305

9313090.0306

APPENDIX A

DRILLING AND CONSTRUCTION DATA

9313090.0307

CONTENTS

Well 199-N-75 . . . . . A-1
Well 199-N-76 . . . . . A-21
Well 199-N-77 . . . . . A-41

9313090.0308

Project: W-017H/1301N RCRA GROUNDWATER MONITORING WELL INSTALLATION		**Well No:** 199-N-75	Page 1 of 2
		Total Depth: 89.60	Static Water Level: 68.30
Date Started: 4-13-92	Date Completed: 7-13-92	Surface Elevation: 453.64	Casing Elevation: 456.78
Location: 100 N AREA		Northing: 150060.72	Easting: 571523.58
Prepared By: N BALLANTYNE		Hanford N: 87235.40	Hanford W: 60149.20
Drilling Co: KEH	Driller: L WATKINS	Drill Meth: CABLE TOOL	Drill Equip: WELL MASTER

Screen: 20.39' OF 4" DIAMETER 10-SLOT TYPE 304 STAINLESS STEEL CONTINUOUS WIREWRAP SET FROM 64.39' TO 84.78'

Filter Pack: 20-40 MESH SILICA SAND FROM 59.12' TO 89.5'

Permanent Casing: 4" DIAMETER TYPE 304 SCHEDULE 5 STAINLESS STEEL WITH CENTRALIZERS SET TO 64.39'

Comments: RADIATION CONTAMINATION ENCOUNTERED FROM 50' TO 89.6'

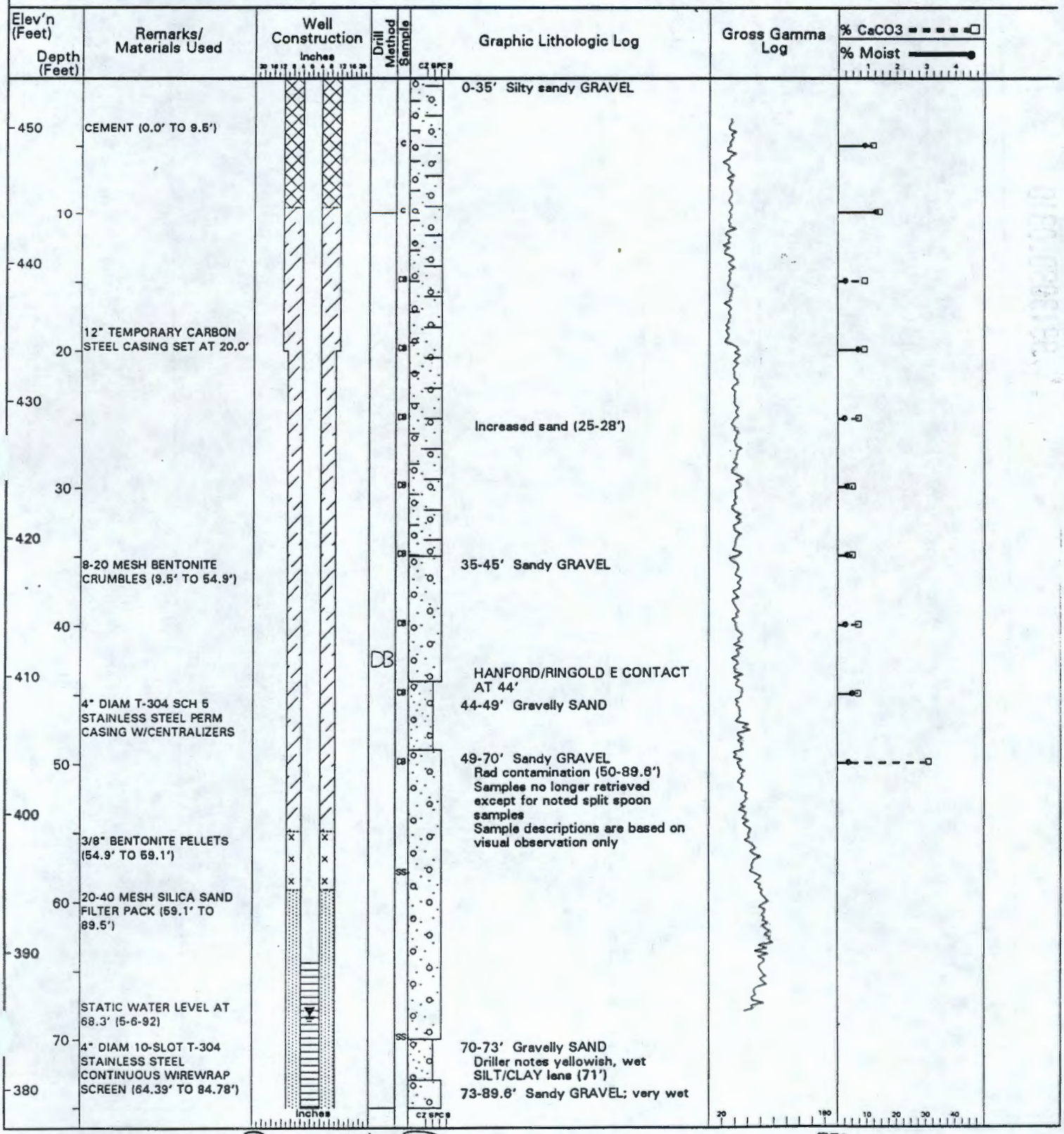

Reviewed By: KD Reynolds / KD Reynolds

Date: FEB. 1 2 1993

9313090.0309

Project: W-017H/1301N RCRA GROUNDWATER MONITORING WELL INSTALLATION | **Well No:** 199-N-75 |

WHC-SD-EN-DP-056, Rev. 0

Elev'n (Feet) / Depth (Feet)	Remarks/ Materials Used	Well Construction (Inches)	Drill Method	Sample	Graphic Lithologic Log	Gross Gamma Log	% CaCO3 / % Moist
80 / 370			DB		500-600 cpm (80')		
					Smaller gravel -- vf to f pebble (85-89.6')		
90 / 360	10" TEMPORARY CARBON STEEL CASING SET AT 89.24" SLUFF (89.5' TO 89.6') TOTAL DEPTH = 89.6'						
100 / 350							
110 / 340							
120 / 330							
130 / 320							
140 / 310							
150 / 300							
160 / 290							

Inches

CZSPCB

20 100

% CaCO3 ▪▪▪▪▪ □

% Moist ▬▬▬ ●

1 2 3 4

10 20 30 40

Reviewed By: KD Reynolds/ KD Reynolds

Date: FEB. 12 1993

9313090.0310

WELL CONSTRUCTION REPORT

VALIDATED KDR 12/9/92 SIGNATURE/DATE

Sp tion No. WHC-S-014 Rev No. ~~6~~ 7

ECNs 150137, 150138, 127439, 164223, 166752, 166757, 150132, 172209, 166752, 119402

Project RCRA - W017

Location 100 N Area

Drilling Company Kaiser Engr

Driller ~~Lenny~~ Louis Watkins ~~KB 4/17/92~~

Other (Companies) WHC

Geologist(s) Nancy Ballantyne (Ebasco)
R.S. Edrington - WHC
ED RAFUSE (WHC)

Well No. 199-N-75 Temp. Well No. –

Coordinates N 150,060.72; E 571,523.58

Casing Elev. 456.78' Ground Elev. 453.64'

Drilling Method

Verification Method visual observation

Criteria WHC-S-014 5.2, 5.3, 7.5 EII 6.7 SEC 6.2

			Initials	Date
Rotary	Air NA	Mud NA	NA	NA
Backhoe	0-9.5'		NB	4/14/92
Cable Tool	D 9.5'-89.5'	H NA	NB	4/29/92
Drilling Fluid	None ③	N/A	N/A	N/A
Other	NA	N/A	N/A	N/A

Geophysical Logging

Sondes	Interval	Date
Gross Gamma	68.0'-3.1'	4/29/92
Spectral Gamma	0.0'-86.0'	5/1/92
	-	
	-	
	-	

Completion Data

Drilled Depth 89.6'

Completed Depth 89.5

Date Started 4/13/92

Date Completed 5/6/92

Static Water Level/Date 68.4 @ 4/30/92
68.3 5/6/92

Aquifer Testing

Type Instantaneous Slug test

Flow Meter I.D. No. N/A

Cal Due Date N/A

Length of Test 1 hr.

Volume Pumped N/A

Drawdown N/A

Date of Test 7/13/92

Completion Results

Cleaning

Verification Method visual inspec & Doc. Review

Criteria WHC-S-014 4.2.2, 7.6, 7.7 EII 5.4
WHC-CM-7-7.5.4

	Initials	Date
Drilling Tools/Rig	NB	4/13/92
Temporary Materials	NB	4/13/92 ①
Permanent Materials	NB	5/4/92

Screen

Type	Length	Slot Size
Stainless continuous wire wrap	20.09'	10.

Depth(s) 64.39'-84.48' b/s - w/out end cap
64.39'-84.48' b/s - w/end cap

Verification Method steel tape measurements

Criteria WHC-S-014 4.2.3, 4.2.5, 12.2.1, 4.2.1

Initials NB Date 5/6/92

Material Storage/Packing

Verification Method visual observation

Criteria WHC-S-014 4.2.2, 7.3

	Initials	Date
Mtl. Handling/Storage	NB	5/6/92
Material Packing	NB	5/6/92

Lubricants/Additives

Verification Method visual observation

Criteria WHC-S-014, 7.2

	Identify	Initials	Date
Additives	NA	N/A	N/A
Lubricants	Well Guard ②	NB	4/15/92

Straightness Test

Verification Method visual observation

Criteria WHC-S-014 8.2

Initials NB Date ~~5~~ 4/29/92

WELL CONSTRUCTION REPORT
(continuation sheet)

199-N-75

Casing (permanent)

Type	Size	Placement
T-304 screen, 10 slot	4"	64.39' - 84.48'
T-304L SS blank	4"	+0.6' - 64.39'
		-
		-

Verification Method: measurement w/ steel tape

Criteria: WHC-S-014 4.2.1, 4.2.4, 4.2.5, 12.2.1

Initials: NB Date: 5/6/92

Well Protection

Verification Method: visual insp w/ tape

Criteria: WHC-S-014 4.2.10

	Initials	Date
Protective Posts	RJE	7/13/92
Protective Casing	RJE	7/13/92
Site Restored	E.C.R	10/16/92
Cap, Hasp and Lock	RJE	7/13/92
Surface Pad	RJE	7/13/92

Annular Seal/Filter Pack

Verification Method: measurement w/ steel tape Criteria: WHC-S-014 4.2.6, 4.2.7, 4.2.8, 4.2.9

Type	Interval	Volume (ft^3)	Initials	Date
Sand, 20-40	59.12' - 89.5'	19.04 (17 sacks)	NB	5/6/92
Bentonite pellets (3/8")	54.9' - 59.12	2.48 (4 buckets)	NB	5/6/92
Bentonite crumbles	9.5' - 54.9'	28.4 (40 sacks)	NB	5/6/92
Cement Grout	2.0' - 9.5'	21.8 (17 sacks)	NB	5/6/92

Well Survey/Labeling

Verification Method: Review of Survey Report

Criteria: WHC-S-014

	Initials	Date
Measurement Point/Surveyed	E.C.R	10/16/92
Protective Casing/Brass Cap Surveyed	E.C.R	10/16/92
Well Number Stenciled	ECR	10/16/92
Brass Cap Labeled	RJE	7/23/92

Pump Installation

Verification Method: visual observation

Criteria: WHC-S-014 4.2.11, 4.2.2

	Initials	Date
Pump Decon/Prep	RJE	7/13/92
Installed	RJE	7/13/92
Pump Tested	RJE	7/13/92

Other (initial if performed)

_____ Well Abandonment _____ Downhole TV Inspection NB Complete As-Built Diagram, Driller's/Geologist's Logs

RJE 7/7/92 Well Development

Comments/Remarks: ① Temporary casing arrived 4/13/92 w/decon paperwork. ② Well Guard used on 4/15, 4/20, 4/22, 4/23, 4/24, 4/25, 4/26, 4/27, 4/28, 4/29. ③ No water added.

Reviewed By (Sign/Print Name): Kent D Reynolds / Kent D Reynolds Date: 12/9/92

A-6000-436 (09/90)

WHC-SD-EN-DP-056, Rev. 0

WELL SUMMARY SHEET

Boring or Well No. 199-N-75

Sheet 1 of 1

Location: 100 N Area
Project: RCRA W017
Elevation: 454' ground elevation
Drilling Contractor: Kaiser Engineers Hanford
Driller: Louis Watkins
Drilling Method and Equipment: Cable Tool - Well Master
Prepared By: Nancy Ballantyne (Sign/Print Name) Date 5/5/92
Reviewed By: Edward C. Rafuse (Sign/Print Name) Date 05/15/92

CONSTRUCTION DATA: Description	Depth in Feet	GEOLOGIC/HYDROLOGIC DATA: Graphic Log	Lithologic Description
12" temporary casing set @ 20.0'	5		silty, sandy GRAVEL
	10		silty, sandy GRAVEL
Cement Grout (2.0'-9.5')	15		silty, sandy GRAVEL
	20		silty, sandy GRAVEL
10" temporary casing set @ 89.24'	25		silty, sandy GRAVEL
	30		silty, sandy GRAVEL
	35		sandy GRAVEL
Bentonite Crumbles (9.5'-54.9')	40		sandy GRAVEL
	45		gravelly SAND
	50		sandy GRAVEL
Bentonite Pellets (54.9'-59.1')	55		sandy GRAVEL
	60		sandy GRAVEL
20-40 Sand Pack (59.1'-89.5')	65		sandy GRAVEL
	70		gravelly SAND
Screen set @ 64.39'-84.48'	75		sandy GRAVEL
	80		sandy GRAVEL
Bottom of wellcasing (84.78')	85		sandy GRAVEL
	90		TD = 89.6' bls
Water level @ 68.7'			
Sluff 89.5'-89.6' bls			
T.D. 89.6'			

Diagram:

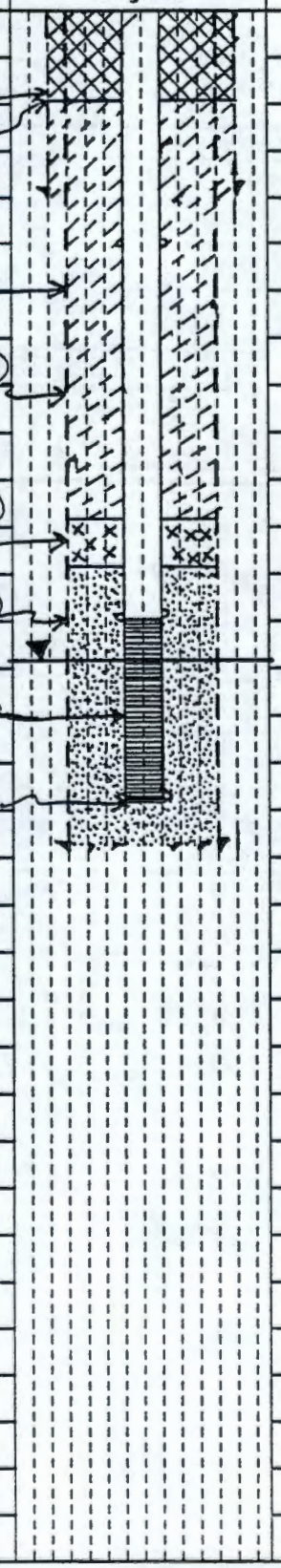

KAISER ENGINEERS HANFORD

WHC-SD-EN-DP-056, Rev. 0
SURVEY DATA REPORT

Request No. — 9 2 3 — 2 2 2

Project/W.O. No.

Title: 100N AREA WELL SURVEY Rev. 1/12/93

File No. 1 N 6 1 — 8 0 1

KEH Job No. CR9696

Prepared By: V. Coyne

Date: 7/31/92

Reviewer: Michael W. Polston

DESCRIPTION OF WORK

Horizontal and Vertical Survey of Well:
199-N-75
199-N-76

ACCEPTABILITY (Within Plan Tolerance)

Yes [X]
No [ ]
NA [ ]
TBD by Requestor [ ]

DISTRIBUTION

Survey File	OR
Field Project File	--
F. Clawson	1
D. Weekes	1
J. Rieger	1

SURVEY RESULTS AND COMMENTS

9313000.0314

WELL NO.	COORDINATES 100N (feet)	COORDINATES WCS835 (meters)	ELEVATION (NGVD-29)(feet) BRASS CAP CONC. PAD	TOP HYDROSTAR PLATE N SIDE	TOP OF CASING N SIDE
199-N-75	N: 8,266.0 W: 6,214.4	N: 150,060.72 E: 571,523.58	453.64	456.80	456.78
199-N-76	N: 8,498.2 W: 6,182.2	N: 150,622.12 E: 571,560.08	448.83	452.14	452.12

BOREHOLE LOG

VALIDATED 01 ISDR 12/9/92 SIGNATURE/DATE

Boring or Well No. 199-N-75

Sheet 1 of 5

Location 100N Area

Project W017

Elevation 454' ground elevation

Drilling Contractor KEH

Driller KEH - Louis Watkins

Drilling Method and Equipment Cable Tool - WellMaster

Prepared By Nancy Ballantyne (Sign/Print Name) Date 4/16/92

Reviewed By Edward C. Rafuse (Sign/Print Name) Date 05/03/92

Depth (feet)	Sample Type and No.	Sample Blows or Recovery	Graphic Log	Sample Description: Soil Classification, Particle Size Distribution, Color, Moisture Content, Sorting, Angularity, Mineralogy, Reaction to HCl.	Comments: Depth of Casing, Drilling Rate, Casing Size & Type, Bit Size, Water Level
		Backhoe		0'-surface - silty, sandy GRAI	
1'	2 Lith 1 Rad 1 Moist/ $CaCO_3$	Backhoe		5' - silty, sandy GRAVEL 70% GRAVEL (20% vf to f pebbles, 30% m to vc pebbles, 15% cobbles, 5% boulders), 20% SAND (10% vf sand to f sand, 10% m to vc sand), 10% SILT. Wet - (2.5Y 4/2) dk grayish brown, dry - (2.5Y 6/2) lt. brownish gry. Fines have strg rxn to HCl. Poorly sorted. Moist. Unconsolidated. Coatings on coarse sands to gravels is mod. reactive to HCl. GRAVEL - mostly basalt, some qtzite, well rounded. SANDS - largegrains - basalt, smaller - qtz/basalt - subrounded to angular	5' sampled on 4/14/92 @ 1050
10'	2 Lith 1 Rad 1 Moist/ $CaCO_3$	Backhoe DB		10' - silty, sandy GRAVEL wet - (2.5Y 4/2) dk grayish brown, dry - (2.5Y 6/2) lt. brownish gry. 55% GRAVEL (15% vf to f pebbles, 20% m to vc pebbles, 15% cobbles, 5% (or less) boulders), 35% SAND (10% vf sand to f sand, 10% m sand, 15% c sand to vc sand) 10% SILT. SEE above for lith. description.	10' interval actually sampled @ 9.5' on 4/14/92 @ 1310
15'	2 Lith 1 Rad 1 Moist/ $CaCO_3$	DB		15' - silty, sandy GRAVEL 65% GRAVEL (20% vf to f pebbles, 25% m to vc pebbles, 20% > cobbles) 25% SAND (10% vf to f sand, 5% m sand, 10% c to vc sand) 10% SILT. Wet - (5Y 3/1) v. dk gray, dry - (5Y 5/2) olive gry. GRAVELS - mostly well rounded (broken pieces from drilling) predominantly basalt. SANDS - subangular to subrounded mostly basalt, some qtz as smaller grains. SILT - as a coating has rxn to HCL. Dry, poorly sorted, unconsolidated.	15' sampled on 4/16/92 @ 0900. Above 15' - probably fill below Hanford Fm.
20'					

A-6000-382 (04/90)

BOREHOLE LOG

Boring or Well No. 199-N-75

Sheet 2 of 5

Location 100 N Area

Project W017

Elevation 454' ground elevation

Drilling Contractor KEH

Driller KEH - L. Watkins

Drilling Method and Equipment Cable Tool / Well Master

Prepared By Nancy Ballantyne (Sign/Print Name) Date 4/20/92

Reviewed By Edward C. Rafuse (Sign/Print Name) Date 05/03/92

Depth (ft)	Sample Type and No.	Sample Blows or Recovery	Graphic Log	Sample Description: Soil Classification, Particle Size Distribution, Color, Moisture Content, Sorting, Angularity, Mineralogy, Reaction to HCl.	Comments: Depth of Casing, Drilling Rate, Casing Size & Type, Bit Size, Water Level
20'	2 Lith 1 moist/ $CaCO_3$ 1 Rad	DB		20' - silty, sandy GRAVEL see description for 15' sample	20' sampled on 4/16/92 @ 1300
25'	2 Lith 1 Rad 1 moist/ $CaCO_3$	DB		25' - silty sandy GRAVEL 55% GRAVEL (15% vf to f pebbles, 20% m to vc pebbles, 20% ≥ cobbles) 35% SAND (10% f to vf sand, 10% m sand, 15% c sand to vc sand) 10% SILT. NO RXN TO HCL. Dry (2.5Y 4/0) dk gray, wet (2.5Y 3/0) v. dk. gray. Dry, poorly sorted, unconsolidated. GRAVEL - mostly well rounded basalt. Sands - mostly angular to subangular (qtz sand - angular), qtz tends to be smaller fraction of sands.	25' sample on 4/17/92 @ 0900 drillers note easy drilling to about 28' - probably due to increased sand from 25' - 28'
30'	2 Lith 1 Rad 1 moist/ $CaCO_3$	DB		30' - silty sandy GRAVEL 65% GRAVEL (20% vf to f pebbles, 25% m to vc pebbles, 20% ≥ cobbles - occ. boulder) 25% SAND (10% vf to f sand, 5% m sand, 10% c to vc sand) 10% (or less) SILT. NO RXN TO HCL, DRY. Wet (2.5Y 3/0) v. dk. gray, Dry (2.5Y 4/0) dk gray. Poorly sorted, unconsolidated, GRAVEL - mostly well rounded basalt. SANDS - mostly angular to subangular basalt (qtz sands - tend to be angular ~ < m. sand).	30' sample on 4/17/92 @ 1000
35'	2 Lith 1 Rad 1 moist/ $CaCO_3$	DB		35' sandy GRAVEL 55% GRAVEL (20% vf to f pebbles, 10% m pebbles, 10% c pebbles, 10% vc pebbles, 5% ≥ cobbles) 45% SAND (15% vf to f sand, 30% m to vc sand) (< 10% SILT). Wet - (2.5Y 3/2) v. dk. grayish brown, dry (5Y 3/1) gray. GRAVELS - well rounded, basalt. SANDS - mostly angular to subangular basalt. some f sands - qtz (angular) Moist to wet. Very weak rxn (coating on larger grains) Poorly sorted, unconsolidated.	35' sample on 4/20/92 @ 0940 increased sand - much easier drilling
40'					

9313090.0316

BOREHOLE LOG

Boring or Well No. 199-N-75

Sheet 3 of 5

ation 100 N Area — Project W017

Elevation 454 ground elevation — Drilling Contractor KEH

Driller KEH - L. Watkins — Drilling Method and Equipment Cable Tool - Well Master

Prepared By Nancy Ballantyne (Sign/Print Name) — Date 4/23/92 — Reviewed By Edward C. Rogers (Sign/Print Name) — Date 05/03/92

Depth (feet)	Sample Type and No.	Sample Blows or Recovery	Graphic Log	Sample Description: Soil Classification, Particle Size Distribution, Color, Moisture Content, Sorting, Angularity, Mineralogy, Reaction to HCl.	Comments: Depth of Casing, Drilling Rate, Casing Size & Type, Bit Size, Water Level
40'	2 Lith 1 Rad 1 moist/ $CaCO_3$	DB	DB	40' - sandy GRAVEL 60% GRAVEL (20% vf to f pebbles, 15% m pebbles, 10% c-pebbles, 10% vc pebbles) 40% SAND (15% vf to f sand, 25% m to vc sand). (<10% silt) see 35' sample description for lithology.	40' sampled on 4/20/92 @ 1010
45'	2 Lith 1 Rad 1 moist/ $CaCO_3$	DB		45' - gravelly SAND 70% SAND (20% vf to f sand, 40% m to c sand, 10% vc sand) 30% GRAVEL (25% vf. to m pebble, 5% c to vc pebble). wet - (2.5Y 5/4) lt olive brown, dry - (No rxn to HCl. Mod. well sorted, moist, unconsolidated. Noted increase in qtz content in sand. SANDS - 70% qtz, angular to subangular, some Fe staining on qtz. 30% basalt + other.	45' sampled on 4/20/92 @ 1300 45' - 49' - mostly sands ← as described
50'	2 Lith 1 Rad 1 moist/ $CaCO_3$	DB DB ST		50' - sandy GRAVEL see description for 40' sample.	* Rad. contamination! 50-52' ST on 4/20/92 @ 1430 50' sample on 4/20/92 @ 1350 - DB split tube not recovered because of rad. contamination.
		DB			
55'	NO SAMPLES	ST 16 32 45 63		55' - sandy GRAVEL - sample seems similar to 40' sample. 56' - sandy GRAVEL - see 40' sample description.	* 55' - samples not recovered because of rad. contamination split tube sample for 56' - 58' sample description from visual observation. Drilling is still easy
		DB			
60'					

9313090.0317

BOREHOLE LOG

Boring or Well No. 199-N-75

Sheet 4 of 5

Location 100 N Area

Project RCRA W017

Elevation 454' ground elevation

Drilling Contractor KEH

Driller L. Watkins - KEH

Drilling Method and Equipment Cable Tool - Well Master

Prepared By Nancy Ballantyne (Sign/Print Name) Date

Reviewed By Edward C. Rafuse (Sign/Print Name) Date 05/08/92

Depth (ft)	Sample Type and No.	Sample Blows or Recovery	Graphic Log	Sample Description: Soil Classification, Particle Size Distribution, Color, Moisture Content, Sorting, Angularity, Mineralogy, Reaction to HCl.	Comments: Depth of Casing, Drilling Rate, Casing Size & Type, Bit Size, Water Level
60'	No Samples	DB		60'-sandy GRAVEL -sample appears to be same as 40' sample - slightly sandier, gravels appear to be coarser, moist.	No samples collected @ 60' 60' reached on 4/23/92 @ 1300
					Drilling becoming more difficult - larger cobbles encountered. also noted more silt in gravels
65'	No Samples	DB		65'-Sandy GRAVEL -appears to be same as 40' sample - slightly sandier, w/ coarser gravels, * increase moisture, more consolidated. @ 67' drillers noted white chalky material ($CaCO_3$?) 67'-70' material was dry	65'-No samples collected 65 reached on 4/24/92 @ 0855
		ST			ST sample collected by K. Pool (rad. contaminated sample).
70'	No Samples	DB		70'-gravelly sand -much sandier w/ coarser gravels ~70% SAND, 30% gravel. No silt very moist. sands appear coarse, @ 71'-driller noted lenses of yellowish silt/clay. interval was wet. @ 73-sandy GRAVEL (~50% GRAVEL, 50% sand - from visual inspection - very moist/wet).	70'-No samples collected 70' reached on 4/24/92 @ 1050 73'-very moist/wet gravels 74-core barrel wet, sediments are mud.
75'	No Samples	DB		75'-sandy GRAVEL 50% GRAVEL, 50% sand - wet! (from visual observation).	75'-No samples collected 75' reached on 4/27/92 @ 0950
80'					

9313090.0318

BOREHOLE LOG

Boring or Well No. 199-N-75

Sheet 5 of 5

on 100 N Area — Project RCRA W017

Elevation 454' ground elevation — Drilling Contractor KEH

Driller KEH - L. Watkins — Drilling Method and Equipment Cable Tool - Well Master

Prepared By Nancy Ballantyne (Sign/Print Name) — Date 4/29/92 — Reviewed By Edward E. Aguirre (Sign/Print Name) — Date 05/14/92

Depth (ft.)	Sample Type and No.	Sample Blows or Recovery	Graphic Log	Sample Description: Soil Classification, Particle Size Distribution, Color, Moisture Content, Sorting, Angularity, Mineralogy, Reaction to HCl.	Comments: Depth of Casing, Drilling Rate, Casing Size & Type, Bit Size, Water Level
80'	No SAMPLES	DB		80' - Sandy GRAVEL	80' - No samples collected
				50% GRAVEL, 50% sand, wet,	80' reached on 4/28/92 @ 0920
				large cobbles appeared to be basalt +	500-600 cpm recorded.
				quartz. GRAVELS - mostly m to lg pebbles to cobbles	
				(from visual observation)	
85'	No SAMPLES	DB		85' - Sandy GRAVEL	85' - No SAMPLES COLLECTED
				- same as above	85' interval reached on 4/28/92
				@ 88' - Gravels become smaller	@ 1530
				(vf to f pebbles).	
					4/29/92 - Water Level
					measured @ 68.7' bls
		T.D. 89.6'			
90'					
95'					

9313090.0319

SPECTRAL GAMMA LOG FOR WELL N-75

WHC Geosciences personnel performed spectral gamma-ray logging on well N-75 and 39 other wells or boreholes in the 100 Areas for CERCLA. The log was run in well N-75 through the temporary casing before the well was completed. The following information is derived from a letter report written by R. K. Price in September, 1992. Additional information about the logging system and the raw data used to compute radionuclide activities are available from Geosciences.

The objective of the spectral gamma-ray survey was to identify man-made gamma-ray emitting radionuclides in the subsurface. The spectral gamma log is used to quantify individual radionuclides with depth.

Spectral gamma information provided here includes a single-page log header, plots of radionuclide activity versus depth, and analysis notes. DAta plots are shown for total gamma and cobalt-60. Potassium, uranium, and thorium, which are naturally occurring radionuclides, are also plotted. Cesium-137, europium-152, and europium-154 were not detected in well N-75, so the data are not presented.

The total gamma plot is the count rate (counts/sec) for all gamma-rays recorded in the spectra. No correction factor for steel casing has been applied. The total gamma plot is equivalent to the PNL gross gamma log.

The usual check of repeatability of the system response is to acquire stationary measurements with extended count time at various depths. The count time of the stationary measurements is several times longer than the survey specifications and the uncertainty is significantly less. The shorter count time of the continuous survey agreed with the longer count stationary measurements within the computed uncertainty ranges.

As an additional check on repeatability, an extended interval of a borehole in the 100-D Area was surveyed twice. The repeatability between the two surveys of identical logging configuration was excellent.

High surface radiation was recording during setup of the equipment at well N-75. This surface radiation is evident in the total gamma plot from 0 to 1 foot in depth. Attenuation properties of the soil below 1 foot effectively eliminated detection of the surface radiation.

9313090.0320

Westinghouse Hanford Company
RLS Spectral Gamma-Ray Borehole Survey Log Header

Project: 100-NR-2

Borehole	199-N-75	
Coordinates	150,060.72 N 571,523.58 E	Meters (Lambert)
Elevation	453.64 feet	Brass Cap (NVGD '29)

Borehole Environment Information

Borehole Fluid Depth 68.7 (Feet) from Zero (0.0) Depth Reference of Log

Casing Size I.D. (inch)	Casing Thickness (inch)	Top Depth (feet)	Base Depth (feet)
12	0.40	0	20
10	0.38	0	89.2

RLS Passive Spectral Gamma Survey Information

Logging Engineers R. V. Cram S. E. Kos
Log Depth Reference at Zero (0.0) depth is Ground Level

Log Date	Archive File Names	Log Mode,[1] Speed	Depth Interval (feet) Top	Base	Incr
May 1, 92	H1N75\A175	MSA 80sec LT Station: 500 s	0 Depth: 68, 70'	86	0.5

[1]MSA: Move-Stop-Acquire Lt: Live Time

Calibration and Analysis Information

RLS Calibration Date: Nov 21, 1991
Calibration Report: WHC-SD-EN-TRP-001

Analyst Names: G. K. Jaeger R. K. Price
Analysis Date: Aug 18, 1992

Analysis Notes: Very high background activity at surface to 1 foot
Radionuclides identified: Co-60

9313090.0321

WELL N-75 SPECTRAL GAMMA RESULTS: TOTAL GAMMA AND COBALT-60.

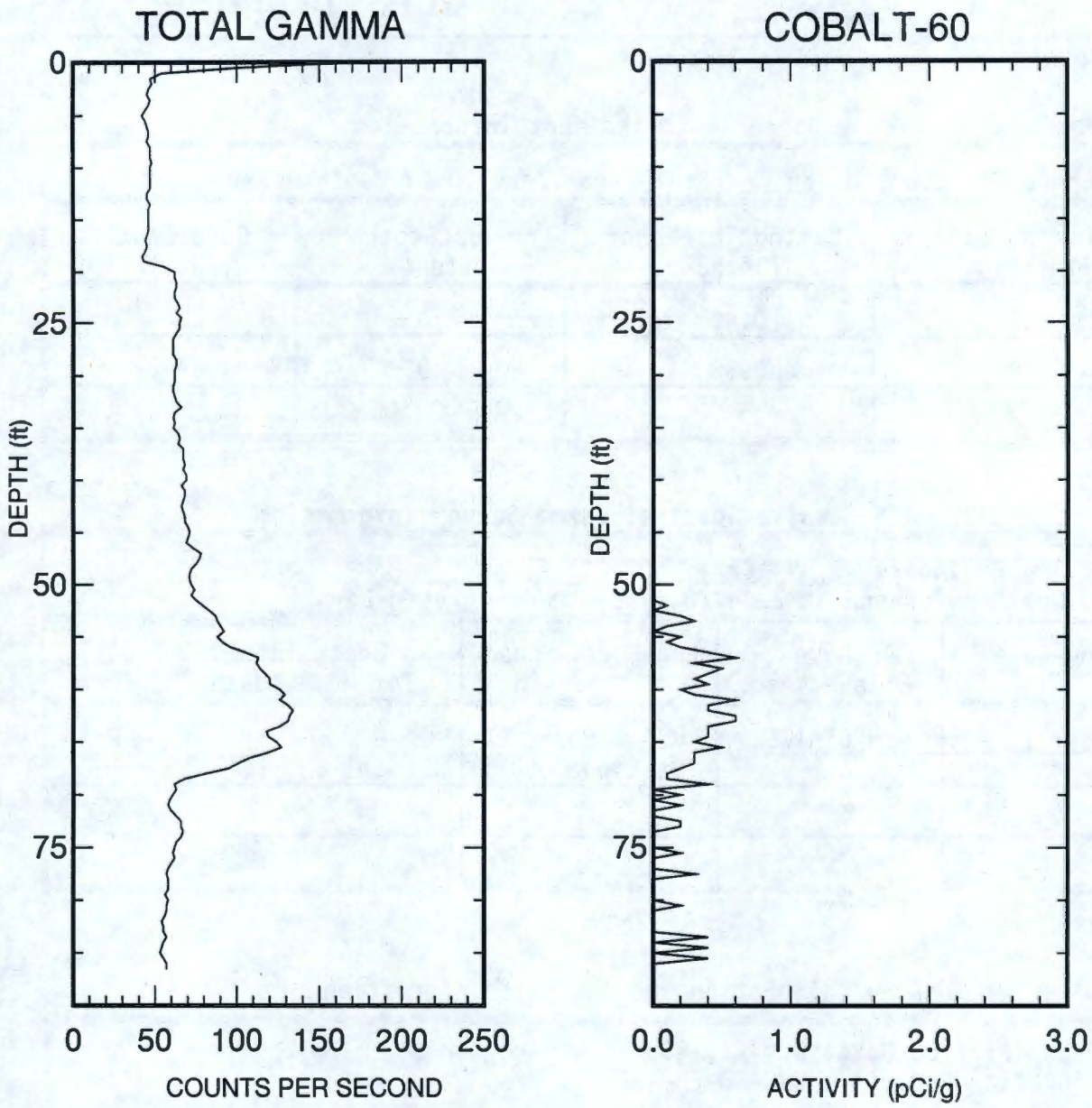

9313090.0322

WELL N-75 SPECTRAL GAMMA RESULTS: NATURALLY-OCCURRING RADIONUCLIDES.

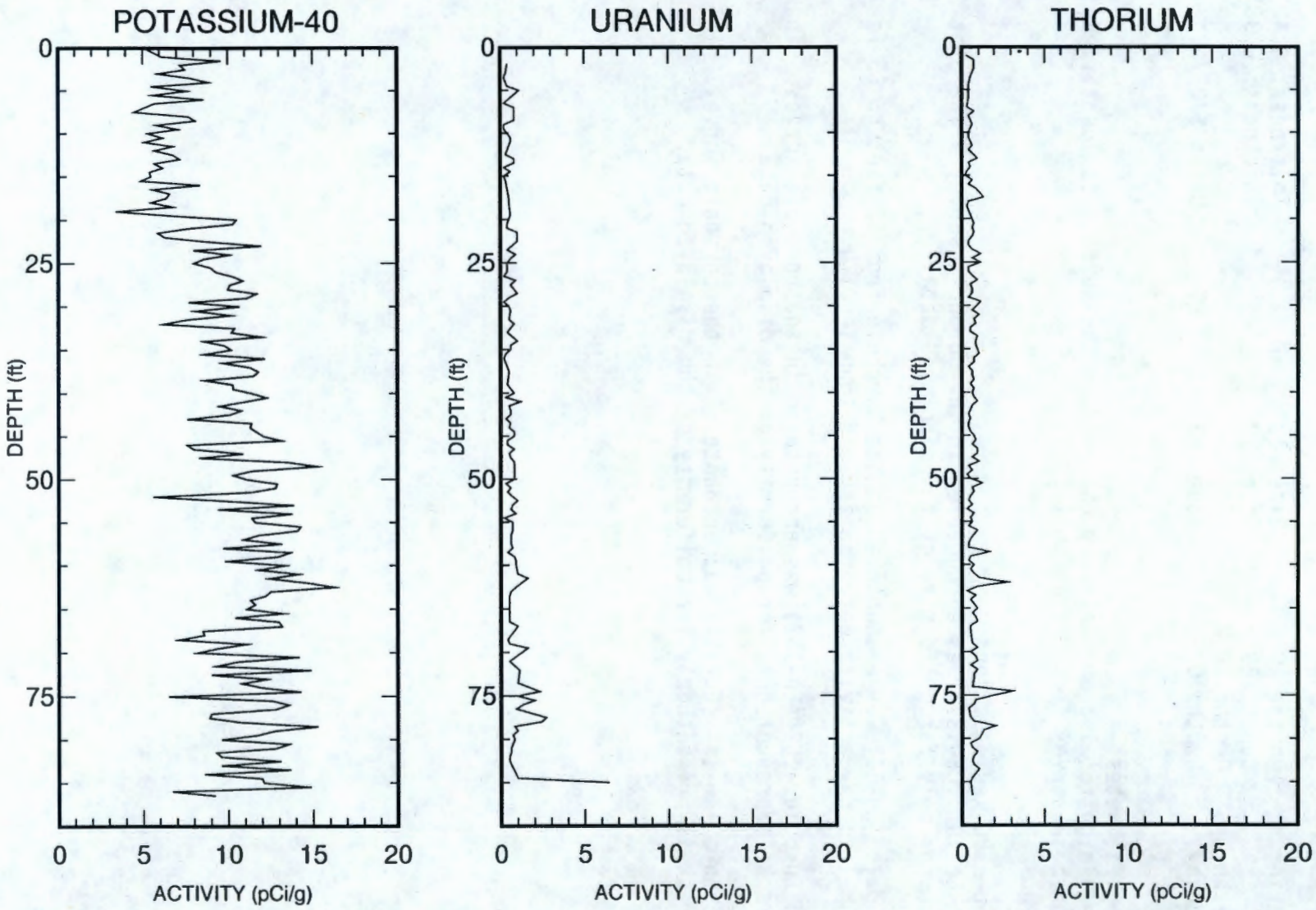

RLS Borehole Survey Report

199-N-75

Casing	Depth: 20'	Size: 12"	Thickness: 0.40"
	Depth: 89'	Size: 10"	Thickness: 0.38"
Water	Depth: 68.7'		
Survey	Depth: 0 - 86'	Mode: MSA 80sec LT	Date: 5/01/92

General Notes:
Very high total gamma activity observed on the surface is identified in the borehole survey from 0 feet to 1 feet.

Man-made Radionuclides:
No-Cesium (Cs-137) was encountered in the borehole survey. The plot track is present only for uniformity of the displayed data.

Cobalt (Co-60) was encountered in the borehole from 52 feet to 85 feet. The cobalt decay activity detected is less than 1 pCi/g.

No Europium-152 (Eu-152) was encountered in the borehole survey. The plot track is present only for uniformity of the displayed data.

No Europium-154 (Eu-154) was encountered in the borehole survey. The plot track is present only for uniformity of the displayed data.

9313090.0324

N-75

Gross Gamma 68.0' – 3.1' 4/29/92

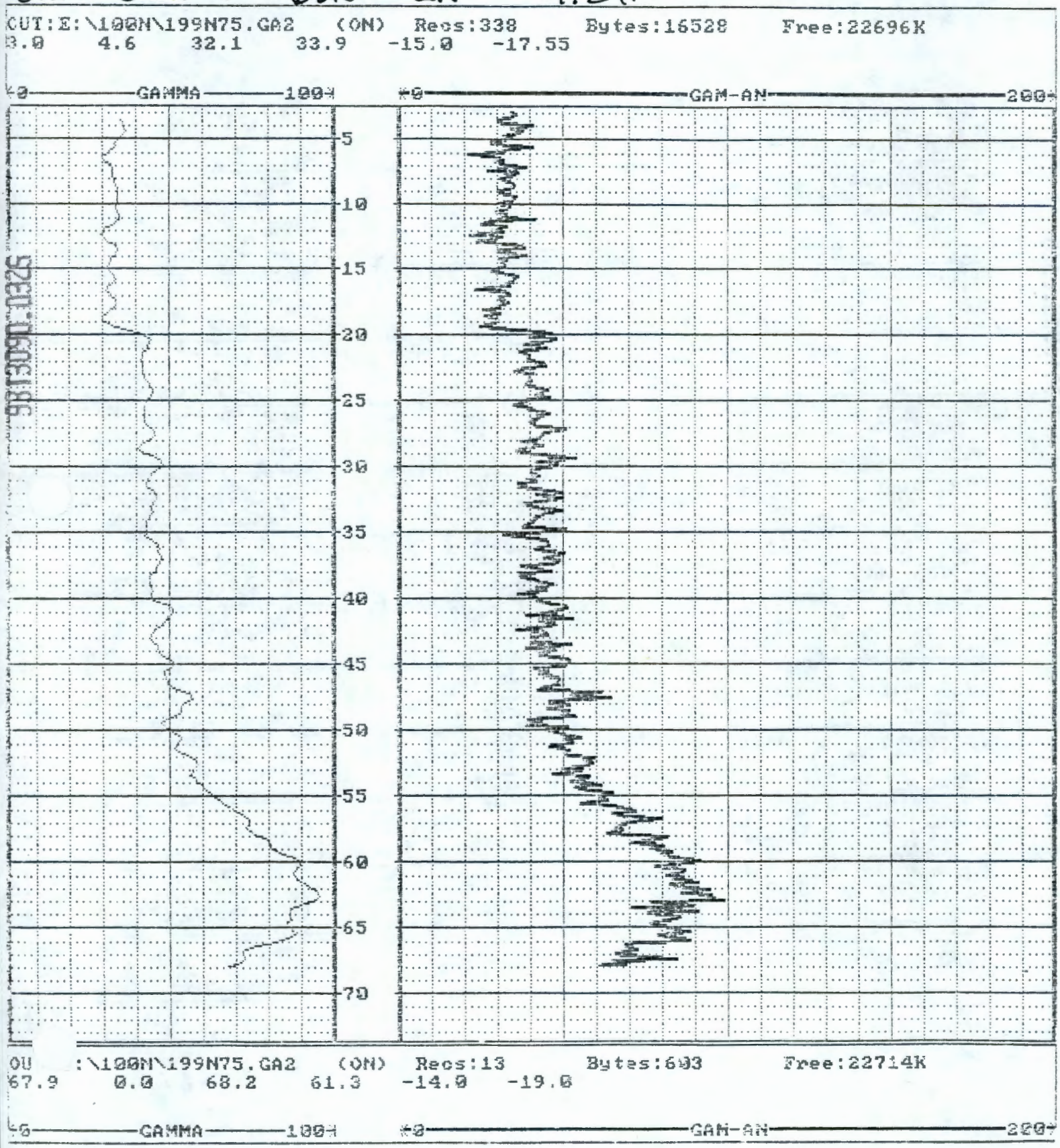

N-75

4/29/92 Rerun

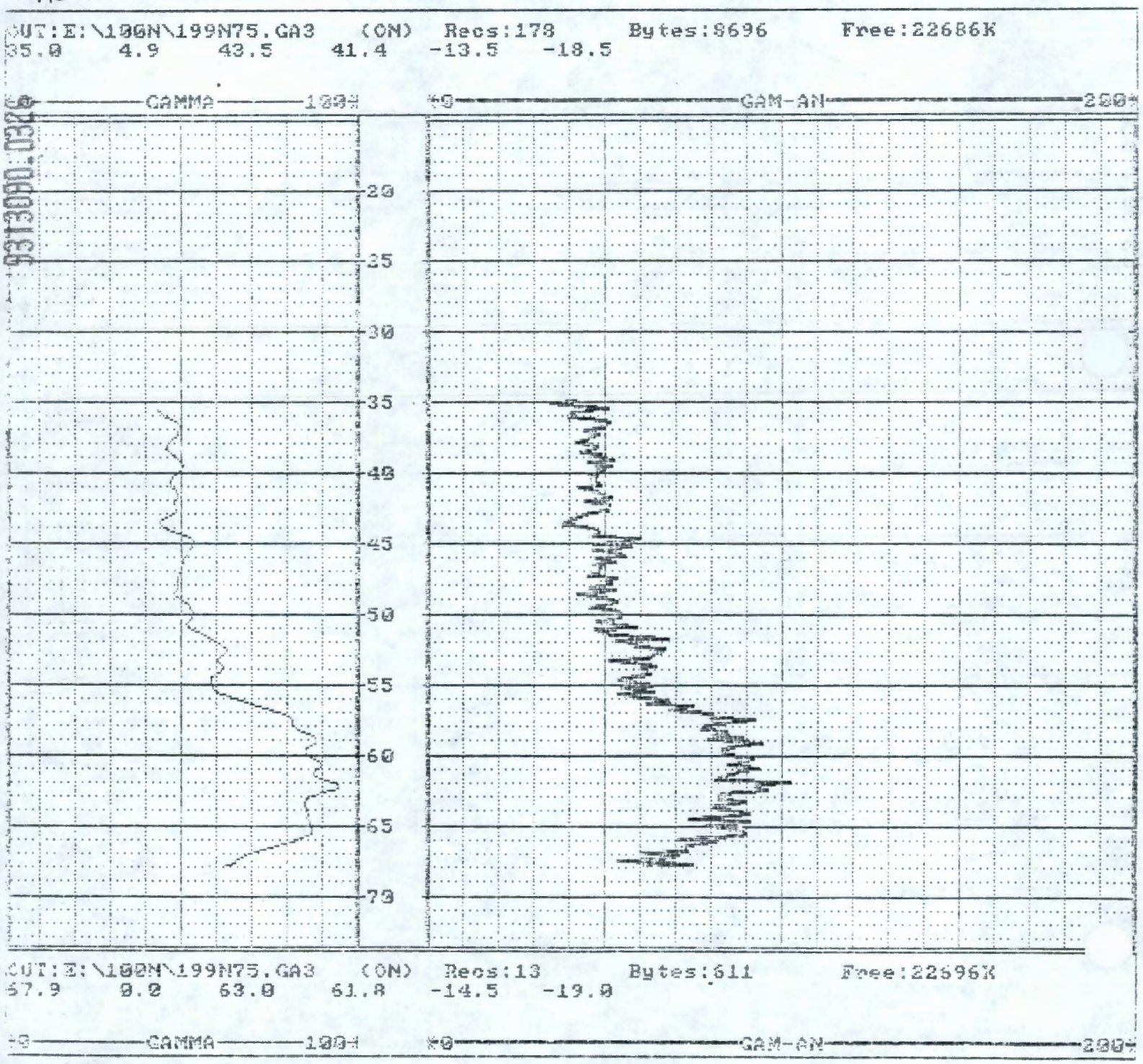

Westinghouse Hanford Company	LOG HEADER	VALIDATED KDR 12/9/92 SIGNATURE/DATE	Page 1 of 2

Well No. 199-N-75 Area 100N Date 4/29/92

Log Run #1 Log Type Gross Gamma

Elevation Datum brass cap Elevation 453.64'

Survey Coordinates 150,060.72 N 571,523.58 E

Log Measured From Ground Surface

Location Description NE of 100N Area, Near River

Ground Surface Elevation 453.64'

Surface Temperature NA Weather Cloudy - Warm

BOREHOLE INFORMATION

Driller Louis Watkins	
Drill Rig Type Cable Tool	Bit Type/Diameter Drive Barrel / 10"
Borehole Diameter(s)/Depth 12"/20.0'	10"/89.5
Depth Driller 89.5	Depth Logger NA (See Below)
Liquid Level 68.7	Liquid ~~Density~~ Appearance Muddy
Temperature NA	

CASING RECORD

Type 12" Carbon Steel Sch.40	Interval +1.0 - 20.0'
Type 10" Carbon Steel Sch.40	Interval +3.0 - 89.24'
Type	Interval
Type	Interval

Well Screen Interval NA

Comments: Return Error = +0.15 high
Centralizer used.
Did not log below water table, due to reported radiological contamination in water.

A-6000-320 (05/90)

LOG HEADER	Page 2 of 2

EQUIPMENT DATA

Logging Company PNL

Operator(s) Alan Pearson

Equipment Brand MLS Equipment Type Analog

Tool Type Gamma Ray Serial No. C627-A97

Base Calibration Date 5/91 Calibration Reference PNL-7785 UC-606

Calibration/Probe Factor 8.84x10-3 eU/cps Base Calibration Datum (eU): Position 1 297.4 eU Position 2 64.3 eU

Dead Time 11.8 μsec. Warm Up Time >15 min

LOGGING INFORMATION

Log Interval From 68.0' To 3.1'

Rerun(s) 68.0' to 35.0'

Pre Survey Verification: Position 1 278.5 eU Position 2 50.8 eU Background 1050 c/s

Base Calibration Difference: Position 1 18.9 eU Position 2 13.5 eU

Logging Speed 5 ft./min. Rerun Scales, CPS/in. 50 c/s/in

Start Time 1600 Completion Time 1800

Chart Speed(s), ft/in. 10 ft./in.

Chart Recorder Horizontal Scale, CPS/in. 50 c/s/in. Time Constant(s) TC-1

Post Survey Verification: Position 1 282.9 eU Position 2 53.0 eU Background 1050 c/s

Percent Change: Position 1 4.4% Position 2 4.3%

Comments Return Error = +0.15' high
Centralizer used. High Background Due to "Golf Ball" in 100N Area.
Difference in Pre & Post Calibration Values due to high background causing scale changes

Witnessed and Verified by: (sign and print name) Alan Pearson Alan Pearson Date: 4/29/92

Project: W-017H/1301N RCRA GROUNDWATER MONITORING WELL INSTALLATION		**Well No:** 199-N-76	Page 1 of 2
		Total Depth: 84.50	Static Water Level: 63.20
Date Started: 4-13-92	Date Completed: 7-9-92	Surface Elevation: 448.83	Casing Elevation: 452.12
Location: 100 N AREA		Northing: 150622.12	Easting: 571560.08
Prepared By: DJ ANDERSON		Hanford N: 87436.51	Hanford W: 60029.33
Drilling Co: KEH	Driller: D LUDTKE	Drill Meth: CABLE TOOL	Drill Equip: BE 22W

Screen: 20.4' OF 4" DIAMETER 10-SLOT TYPE 304 STAINLESS STEEL CONTINUOUS WIREWRAP SET FROM 61.0' TO 81.4'

Filter Pack: 20-40 MESH SILICA SAND FROM 53.9' TO 83.3'

Permanent Casing: 4" DIAMETER TYPE 304 SCHEDULE 5 STAINLESS STEEL WITH CENTRALIZERS SET TO 61.0'

Comments: RADIATION CONTAMINATION ENCOUNTERED FROM 53' TO 72'

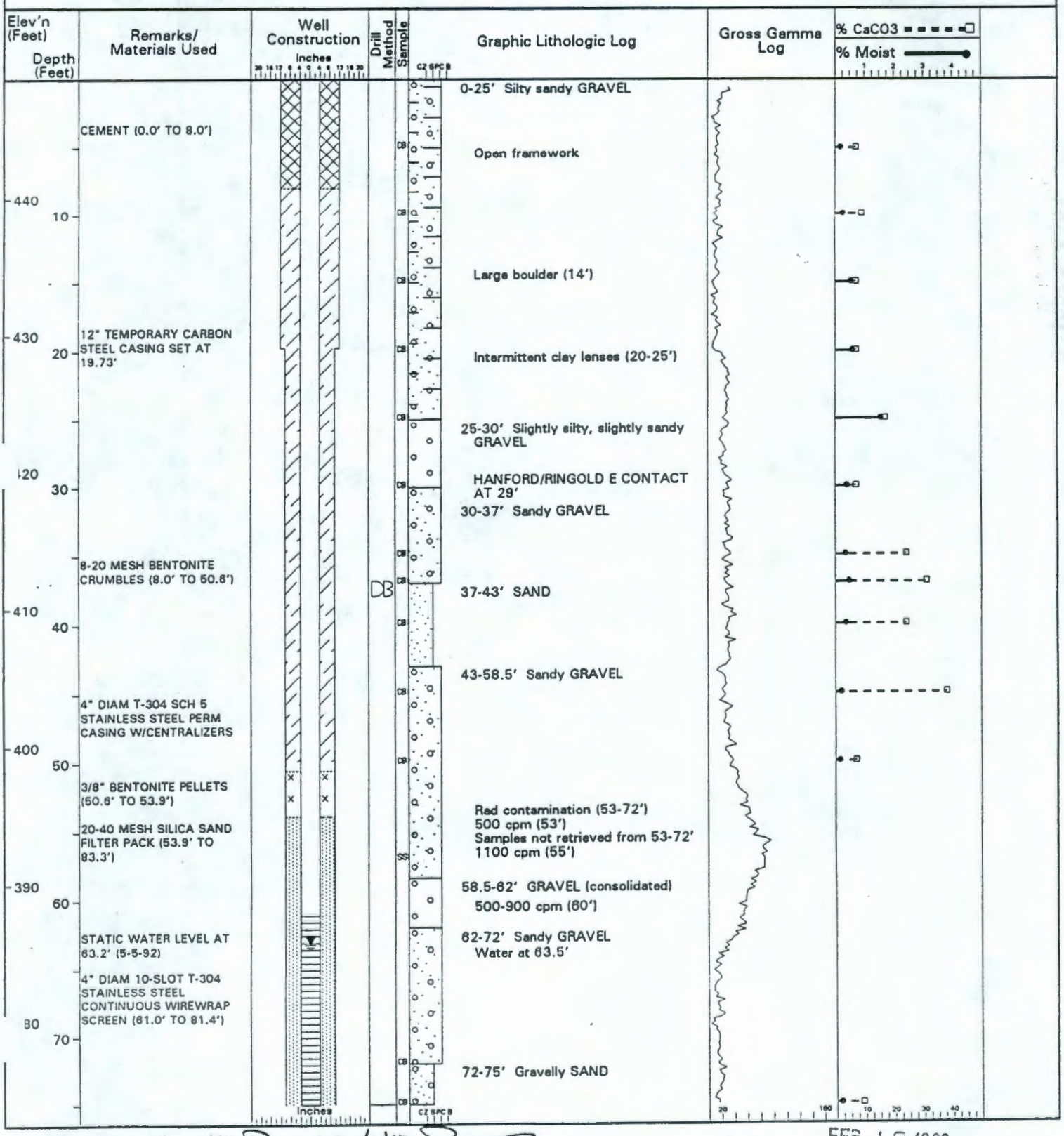

Reviewed By: KD Reynolds / KD Reynolds Date: FEB. 12 1993

9313090.0328

Project: W-017H/1301N RCRA GROUNDWATER MONITORING WELL INSTALLATION

Well No: 199-N-76

WHC-SD-EN-DP-056, Rev. 0

Elev'n (Feet) / Depth (Feet)	Remarks/ Materials Used	Well Construction (Inches)	Drill Method / Sample	Graphic Lithologic Log	Gross Gamma Log	% CaCO3 / % Moist
370 / 80			DB	75-80' Slightly gravelly SAND Less gravel (78'-80') 80-84.5' SAND with trace pebbles		
	SLUFF (83.3' TO 84.5') 10" TEMPORARY CARBON STEEL CASING SET AT 84.4' TOTAL DEPTH = 84.5'					
360 / 90						
350 / 100						
340 / 110						
330 / 120						
320 / 130						
310 / 140						
300 / 150						
290 / 160						

Inches

CZSPCB

20 — 100

% CaCO3 ■ - - - - □

% Moist ● ——— □

1 2 3 4

10 20 30 40

9313090.0329

Reviewed By: KD Reynolds/ KD Reynolds

Date: FEB. 1 2 1993

WELL CONSTRUCTION REPORT

REVALIDATED KDR 12/9/92 SIGNATURE/DATE

Specification No. WHC-S-014 Rev No. ~~6~~ 7 BAT 12-15-92

ECNs 150137, 150138, 127439, 164223, 166752, 166757, 150132, 172209, 166752, 119402, 150143

Project RCRA - W017

Location 100 N Area

Drilling Company Kaiser Engr

Driller Daryl Ludtke

Other (Companies) WHC,

Geologist(s) Dennis Anderson - WHC, Ken Lane - MCE, R.J. Edelington - WHC, ED. RAFUSE (WHC)

Well No. 199-N-76 Temp. Well No. -

Coordinates N 150,622.12 E 571,560.08

Casing Elev. 452.12' Ground Elev. 448.83'

Drilling Method

Verification Method visual observation

Criteria WHC-S-014 5.2, 5.3, 7.5 EII 6.7 SOC 6.2

			Initials	Date
Rotary	Air N/A	Mud N/A	N/A	N/A
BACKHOE	0-7'		DJA	4/13/92
Cable Tool	D 7'-84'	H N/A	DJA	4/28/92
① Drilling Fluid	DI WATER	6 gals.	DJA	4/23/92
② Other	N/A	N/A	N/A	N/A

Geophysical Logging

Sondes	Interval	Date
gross gamma	82.5' - .08'	4/28/92
gross gamma	82.5' - 40.0'	4/28/92
	-	
	-	
	-	

Completion Data

Drilled Depth 84.5

Completed Depth 83.3

Date Started 4/13/92

Date Completed 5/5/92

Static Water Level/Date 64.1 @ 4/29/92

5/5/92 = 63.2

Aquifer Testing

Type Instantaneous Slug test

Flow Meter I.D. No. N/A

Cal Due Date N/A

Length of Test 1 hr.

Volume Pumped N/A

Drawdown N/A

Date of Test 7/9/92

Completion Results

Cleaning

Verification Method Visual inspec. & Doc. Review

Criteria WHC-S-014 4.2.2, 7.6, 7.7 EII 5.4 WHC-CM- 7-7.3.4

	Initials	Date
③ Drilling Tools/Rig	DJA / DJA	4/13/92 / 4/13/92
④ Temporary Materials	DJA	4/29/92
Permanent Materials	DJA	5/5/92

Material Storage/Packing

Verification Method Visual observation

Criteria WHC-S-014 4.2.2, 7.3

	Initials	Date
Mtl. Handling/Storage	DJA	5/5/92
Material Packing	DJA	5/5/92

Screen

Type	Length	Slot Size
304 stainless steel	~~20.38~~ 20.07 DA	10 slot
Cont wrap		

Depth(s) 61.0' - 81.1' w/o cap

61.0' - 81.4 w/cap

Verification Method steel tape measurement

Criteria WHC-S-014 4.2.3, 4.2.5, 12.2.1, 4.2.1

Initials DJA Date 5/5/92

Lubricants/Additives

Verification Method visual observation

Criteria WHC-S-014 7.2

	Identify	Initials	Date
① Additives	DI H_2O 6 gals.	DJA	4/29/92
② Lubricants	Wellguard	DJA	4/28/92

Straightness Test

Verification Method visual observation

Criteria WHC-S-014 8.2

Initials DJA Date 4/28/92

WELL CONSTRUCTION REPORT
(continuation sheet)

199-N-76

Casing (permanent)

Type	Size	Placement
T-304 SS screen	10slot 4"	61.0' - 81.4
T304L SS blank.	4"	2.8AS - 61.0' b/s
		-
		-

Verification Method: Measurement w/steel tape

Criteria: WHC-S-014 4.2.1, 4.2.4, 4.2.5, 12.2.1

Initials: DJA Date: 5/5/92

Well Protection

Verification Method: Visual inspec. w/ tape

Criteria: WHC-S-014 4.2.10

	Initials	Date
Protective Posts	RJE	7/9/92
Protective Casing	RJE	7/9/92
Site Restored	ECL	10/16/92
Cap, Hasp and Lock	RJE	7/9/92
Surface Pad	RJE	7/9/92

Annular Seal/Filter Pack

Verification Method: Measurement w/ steel tape Criteria: WHC-S-014 4.2.6, 4.2.7, 4.2.8, 4.2.9

Type	Interval	Volume ft^3	Initials	Date
Sand 20-40	53.9 - 81.4 (83.3 DJA)	17sks = 19.04	DJA	5/4/92
Bentonite pellets 3/8"	50.6 - 53.9	2bks = 1.86	DJA	5/4/92
Bentonite chumbles 8-20 mesh	8.0 - 50.6	41sks = 29.1	DJA	5/5/92
Cement grout Portland I+II	20 - 8.0	29sks = 37.3	DJA	5/5/92

Well Survey/Labeling

Verification Method: Review of Survey Report

Criteria: WHC-S-014 3.4, 4.2.10

	Initials	Date
Measurement Point/Surveyed	ECL	10/16/92
Protective Casing/Brass Cap Surveyed	ECL	10/16/92
Well Number Stenciled	ECL	10/16/92
Brass Cap Labeled	RJE	7/9/92

Pump Installation

Verification Method: visual observation

Criteria: WHC-S-014 4.2.11, 4.2.2

	Initials	Date
Pump Decon/Prep	RJE	7/9/92
Installed	RJE	7/9/92
Pump Tested	RJE	7/9/92

Other (initial if performed)

_____ Well Abandonment _____ Downhole TV Inspection LB Complete As-Built Diagram, Driller's/Geologist's Logs

RJE 7/6/92 Well Development

Comments/Remarks: ① Addition of water - 4/15/92 added 6 gal DI water

② Wellguard used - 4/14/92, 4/22/92, 4/23/92, 4/29/92

③ Drill Rig / Tools - recd decon papers on rig / tools 4/13/92

④ Temp materials - recd decon papers on backhoe bucket 4/13/92, recd papers for decon of split tube on, recd decon on gamma probe 4/28/92, recd decon on decon tank.

Reviewed By (Sign/Print Name): Kent D Reynolds Date: 12/9/92

A-6000-436 (09/90)

WELL SUMMARY SHEET

Boring or Well No. 199-N-76

Sheet 1 of 1

Location 100 N Area

on 449' ground elevation

Driller Daryl Ludtke

Prepared By Dennis Anderson (Sign/Print Name) Date 4/13/92

Project RCRA - W017

Drilling Contractor Kaiser Drilling

Drilling Method and Equipment Cable tool - Bucyrus Erie

Reviewed By EDWARD G. RAFFEE Edward G. Raffee (Sign/Print Name) Date 05/08/92

CONSTRUCTION DATA: Description	Diagram	Depth in Feet	GEOLOGIC/HYDROLOGIC DATA: Graphic Log	Lithologic Description
Stainless steel casing above surface = 2.8'		5		silty sandy GRAVEL
Cement grout 2.0'-8.0 b/s		10		" " "
		15		" " "
		20		" " "
12" temporary carbon steel casing to 19.73' b/s		25		" " "
		30		slightly silty sandy GRAVEL
		35		sandy GRAVEL
Bentonite crumbles 8.0'-50.6'		40		SAND
10" carbon steel temp. casing to 84.4' b/s		45		sandy GRAVEL
		50		" "
Bentonite pellets - 50.6'-53.9' b/s		55		" " (rad)
To sand pack - 53.9' b/s		60		" " (consolidated @ ~ 58-62' b/s
Top of screen - 61.0' b/s		65		sandy GRAVEL
Static water level - 63.2' @ 5/5/92		70		sandy GRAVEL
		75		gravelly SAND
Filter pack (20-40) 83.3 - 53.9		80		slightly gravelly SAND
304 SS screen - 10 slot - 81.1' - 61.1'		85		SAND
Sluff 83.3' - 84.5'		90		
Bottom of SS casing @ 81.4' b/s w/cap				
Drilled depth - 84.5' b/s				

KAISER ENGINEERS HANFORD

SURVEY DATA REPORT

Request No. — 9 2 3 — 2 2 2

Project/W.O. No.

Title: 100N AREA WELL SURVEY Rev. 1/12/93

File No. 1 N 6 1 — 8 0 .

KEH Job No. CR9696

Prepared By: V. Coyne

Date: 7/31/92

Reviewer: Michael W. Polster 1 1

DESCRIPTION OF WORK	ACCEPTABILITY (Within Plan Tolerance)	DISTRIBUTION	
Horizontal and Vertical Survey of Wells:	Yes [X]	Survey File	OR
199-N-75	No [ ]	Field Project File	--
199-N-76	NA [ ]	F. Clawson	1
	TBD by Requestor [ ]	D. Weekes	1
		J. Rieger	1

SURVEY RESULTS AND COMMENTS

WELL NO.	COORDINATES 100N (feet)	COORDINATES WCS835 (meters)	ELEVATION (NGVD-29)(feet) BRASS CAP CONC. PAD	TOP HYDROSTAR PLATE N SIDE	TOP OF CASING N SIDE
199-N-75	N: 8,266.0 W: 6,214.4	N: 150,060.72 E: 571,523.58	453.64	456.80	456.78
199-N-76	N: 8,498.2 W: 6,182.2	N: 150,622.12 E: 571,560.08	448.83	452.14	452.12

BOREHOLE LOG

VALIDATED 5
KDR 12/9/92
SIGNATURE/DATE

Boring or Well No. 199-N-76

Sheet 1 of 5

tion 100 N Area — Project RCRA - W017

...ation 449' ground elevation — Drilling Contractor Kaiser Engr

Driller Darrell Ludtke — Drilling Method and Equipment CABLETOOL - B.E 22W

Prepared By Dennis J Anderson (Sign/Print Name) — Date 4/13/92 — Reviewed By EDWARD C. RAFUSE Edward C. Rafuse (Sign/Print Name) — Date 04/20/92

Depth (feet)	Sample Type and No.	Sample Blows or Recovery	Graphic Log	Sample Description: Soil Classification, Particle Size Distribution, Color, Moisture Content, Sorting, Angularity, Mineralogy, Reaction to HCl.	Comments: Depth of Casing, Drilling Rate, Casing Size & Type, Bit Size, Water Level
				silty sandy GRAVEL (15% silt, 10% sand	
				75% GRAVEL) 10% vcs 15% cs 5% fs 10% sc	
				20% cs 25% fs 20% vcp 20% cp	No det w/ PID + rad
				30% vfs 20% mp 10% fp 10% vfp	
				sands 2.5y 4/2.5 dkgry-drm-dbrn - wet 5/2.5 grybrn - ltolbrn - dry	
				rock 2.5y 3.0 vy dkgry wet 3.0 gray dry w/ evap.	
				dry sample, very poor SORTING, rnd-wellrnd / spher -	
				subdiscoidal, weak Rxn to 10% HCl on sands, evap	shows weak Rxn.
	1 rad / moist / 2 lith	BACK HOE		90% basalt, 10% Qtz in rock, 75% Qtz 10% basalt in sands	
5'				w/ 10% Qtze + 5% minor const also in sands	5' sample 4/13/92 @ 1400
				silty sandy GRAVEL (15% silt, 15% sand,	
				70% GRAVEL) 15% vcs 15% fs 5% sc 20% mp	poor recovery
				30% cs 10% vfs 10% vcp 25% fp	2 gal DI H_2O added 0850
				30% ms 20% cp 20% vfs	
				sands - 5y 3/2 dkolgry-wet; 5y 2.5/2 ol-dlgry dry	
				rock - 3.75y 2.5/1.5 blk-wet; 3.75y 5/.5 gray dry	open framework
				sample damp, very poor SORTING, subrnd-wellrnd /	
	1 rad / moist / 2 lith			spher - subdiscoidal, weak Rxn to 10% HCl, in sands + rock	
				90% basalt, 10% Qtz, trace gran + Qtze	
10'		DB			10' sample 4/15/92 @ 0920
				silty sandy GRAVEL (15% silt, 10% sand	
				95% GRAVEL) desc same as above	
				minor clay const	2 gal DI H_2O added 1110
				sand - silt ~~2.5y~~ 5.0y 3/1 vydkgry - wet	2 gal DI H_2O added 1335
				5y 4.5/1 gray - dk gray dry	
				rock. 2.5y. 3/0 vydk gry - wet.	
				2.5y 5/0 gray - dry, slightly damp.	
	1 rad / moist / 2 lith			rnd-wellrnd - spherical	1 g boulder @ 14' bls
				No Rxn. on rock material, very weak in sands	
15'		DB		Non PLASTIC.	15' sample 4/15/92 @ 1350
				silty sandy GRAVEL (5% silt, 15% sand,	
				80% GRAVEL)	
				part size dist similar to 15' sample	No det w/ PID or Rad
				sand - 3.75y 3/2 vydkgrybrn - dkolgry wet	
				3.75y 4/1 dkgry - dkgrybrn. - olgry dry	
				rock 2.5y 3/0 " vy dk gry wet	
				5/0 gray - dry	
	1 rad / moist / 2 lith			damp sample, poor SORTING, rnd-wellrnd / spher	
				sub disc. very weak - No Rxn, min same as	
20'		DB		10' - 15' samples	20' sample 4/15/

A-6000-382 (04/90)

BOREHOLE LOG

Boring or Well No. 199-N-76

Sheet 2 of 5

Location: 100 N AREA
Project: RCRA - W017
Elevation: 449' ground elevation
Drilling Contractor: Kaiser Engr
Driller: Darrell Ludtke.
Drilling Method and Equipment: CABLE TOOL - B.E
Prepared By: Dennis Anderson (Sign/Print Name) Date: 4/16/92
Reviewed By: Edward C. Rafuse (Sign/Print Name) Date: 04/20/92

Depth (feet)	Sample Type and No.	Sample Blows or Recovery	Graphic Log	Sample Description: Soil Classification, Particle Size Distribution, Color, Moisture Content, Sorting, Angularity, Mineralogy, Reaction to HCl.	Comments: Depth of Casing, Drilling Rate, Casing Size & Type, Bit Size, Water Level
20				silty sandy GRAVEL (10% silt 10% sand, 80% GRAVEL) 5% vcs 35% fs 5% sc 25% vcp 15% fp	No H2O
				5% cs 35% vfs 25% cp 10% vfp	No venting
				20% ms 20% mp	No Rad
				rock 2.5y 2.5/0 vydkgry-blk wet. 2.5y 4/1	
				sands-silts-2.5y 5/2 ltgry-ltbrngry dry	Noted: clay lenses (intermit.)
				2.5y 3/2 vy dk gry brn - wet.	
	1rad 1moist 21ith			poor sorting, slightly moist wellrnd-rnd/sph-subdisc, No Rtn to 10% HCl on rocks, slight Rtn on sands	
25		DB		90% basalt 10% Qtz No plastic	25' sample 4/16/92 @ 0840
				slightly silty, slightly sandy GRAVEL (<5% silt, <5% sand 90+% GRAVEL)	
				desc same as above	
					No H2O
					No venting
					< det w/PID + RAD
30		DB			30' sample 4/16/92 @ 1240
				sandy GRAVEL (30% sand 70% GRAVEL)	
				5% vcs 5% vcp 20% mp	
				10% cs 15% cp 25% fp	
				25% ms 20% mp 15% vfp	
				sands - 2.5y 4/2 dkgry brn - wet 2.5y	
				rock - 2.5y 3/0 - 5/4 vydkgry - ltolbrn - wet.	
				2.5y 4/0 - 7/0 dkgry - plvel - dry	
	1rad 1moist 21ith			poor sorting, slightly moist, weak Rtn in sands, No Rtn in rock material	
				15% basalt 30% Qtz 15% Qtze 30% volcanic, 10% gran.	
35		DB			35' sample 4/17/92 @ 0855
				SAND - 35% ms, 40% fs, 25% fs	
	1rad 1moist 21ith			2.5y 4.5/3 ltol brn - olbrn wet	
37		DB		2.5y 6/2.5 ltbrngry - ltyelbrn dry	37' sample 4/17/92 @ 0920
				very good sorting, very weak Rtn to 10% HCl	37' sample + 40 sample same desc
	1rad 1moist 21ith			90% Qtz, 10% Qtze, gran, musc.	
40		DB			40' sample 4/17/92 @ 0930

BOREHOLE LOG

Boring or Well No. 199-N-76

Sheet 3 of 5

tion 100 N AREA

Project RCRA W017

Elevation 449' ground elevation

Drilling Contractor Kaiser

Driller Darrell Ludtke

Drilling Method and Equipment CABLE TOOL - BE

Prepared By Dennis J. Andrews (Sign/Print Name) Date 4/17/92

Reviewed By EDWARD C. RAFFIE Edward C. Raffie (Sign/Print Name) Date 04/28/92

Depth (feet)	Sample Type and No.	Sample Blows or Recovery	Graphic Log	Sample Description: Soil Classification, Particle Size Distribution, Color, Moisture Content, Sorting, Angularity, Mineralogy, Reaction to HCl.	Comments: Depth of Casing, Drilling Rate, Casing Size & Type, Bit Size, Water Level
40				sandy GRAVEL (20% sand 80% GRAVEL)	
				10% vcs 30% fs 10% vcp 25% fp	
				10% cs 20% vfs 20% cp 15% vfp	gravels @ 43' bls
				30% ms 30% mp	
				rock-2.5y 3/0-6/4 vydkgry-ltyelbrn wet	cont.
				2.5y 4/0-5/4 dkgry-ltolbrn-dry	Not det w/ p10 or RAD survey
				sands-2.5y 3/2 vydkgrybrn wet	
				2.5y 5.5/2 ltbrngry-grbrn-dry	
	1rad 1moist 21th			dry sample, poor sorting, rnd-well	45' sample 4/20/92 @ 0980
45		DB		rnd / spherical-subdiscoidal, weak Rtn	
				in sands, No Rtn on rock material	
				40% basalt, 30% Qtz, 20% vol porph,	
				10% Qtze, gran	good drill rate
					No cont
				50' sample same @ 45'	
	1rad 1moist 21th				
50		DB			50' sample 9/20/92 @ 0945
				No sample @ 55' due to rad	
				sample desc same @ 45'	
					500 cts @ 53' bls 4/20/92 @ 10:15
55		57			
		6"-16 blows 6"-38 blows		split tube TAKEN for Chem sampler 55'-57'	1100 cts @ 55' 0900 4/22/93
				sample desc same @ 45'	
		DB			
				No sample @ 60' due to rad	consolidated material @ 59.5-60'
60					

BOREHOLE LOG

Boring or Well No. 199-N-76

Sheet 4 of 5

Location: 100 N Area
Project: RCRA W017
Elevation: 449' ground elevation
Drilling Contractor: Kaiser Engr
Driller: Darrell Ludtke
Drilling Method and Equipment: Cable tool - B.E
Prepared By: [signature] (Sign/Print Name) Date: 4/23/92
Reviewed By: Nancy Ballantyne (Sign/Print Name) Date: 10/2/92

Depth (feet)	Sample Type and No.	Sample Blows or Recovery	Graphic Log	Sample Description: Soil Classification, Particle Size Distribution, Color, Moisture Content, Sorting, Angularity, Mineralogy, Reaction to HCl.	Comments: Depth of Casing, Drilling Rate, Casing Size & Type, Bit Size, Water Level
60		DB		GRAVELS (consolidated) 58.5-62'	
					counts 4/23/92
					@ 500-900 m/rem
				< consolidation	
					sandy GRAVEL @ 62' bls
				sandy gravels 62-72	water encountered 4/23/92
					@ 63.5' bls
					No samples taken
65'					50-72' due to rad.
		DB			
70'					
					< det rad @
72				Begin sampling @ 72'	72' sample
	21th 1CaCO3 1rad	DB		gravelly SAND (35% gravel 65% SAND)	
				15% cms 60% mp	
				40% fs 30% fp	
				35% vfs 10% vfp	
				sands - 2.5y 5/3 grybrn WET: 2.5y 7/2 Hgry dry ; pebbles 2.5y 3/0 vydk gry - 7/4 plyel	
75				mod sorting, rnd-well rnd, in pebbles, rnd-subrnd in sands, No Rxn. 70% Qtz, 20% basalt,	75' sample 4/27/92 @ 0855
	21th 1CaCO3 1rad	DB		20% Qtze, gran	
				75' = slightly gravelly SAND (25% gravel,	< gravels
				75% SAND) 5% cms 60% mp	
				55% fs 30% fp	
				40% vfs 20% vfp	
				sands - 2.5y 4/2 dkgrbrn wet, 2.5y 6/2 Hbrngry dry	
				pebbles - 2.5y 3/0 - 7/4 vydkgry - plyellow wet 2.5y 5/0 - 7/3 gry - plyel	
				mod-well sorted, rnd-well rnd 1sph-subsphroidal, No Rxn to 10% HCl	
80				75% Qtz, 20% Qtze, gran, 5% basalt,	trace musc. < gravels @ 78'

A-6000-382 (04/90)

9313090.0337

BOREHOLE LOG

Boring or Well No. 199-N-76

Sheet 5 of 5

In 100 N Area

Project RCRA - W017

Elevation 449' ground elevation

Drilling Contractor Kaiser Engr

Driller D. Ludtke

Drilling Method and Equipment Cabletool - B.E.

Prepared By Dennis J Anderson (Sign/Print Name) Date 4/28/92

Reviewed By Nancy Ballantyne (Sign/Print Name) Date 10/2/92

Depth (feet)	Sample Type and No.	Sample Blows or Recovery	Graphic Log	Sample Description: Soil Classification, Particle Size Distribution, Color, Moisture Content, Sorting, Angularity, Mineralogy, Reaction to HCl.	Comments: Depth of Casing, Drilling Rate, Casing Size & Type, Bit Size, Water Level
80				SAND w/ trace pebbles	
				10% ms 20% fp	
				50% fs 80% vfp	
				40% vfs pebbles - 2.5y 3/0 - 7/4 vy dkbrownwet; 2.5y 6/2 ltgraybrn - dry	
				sat. sample, mod-sorting, sands 2.5y 4/2 dkgraybrownwet; 6/3 ltyelbrndry	
	2 lith 1 CaCO3 1 rod	DB		rnd-1 sph-sub discoidal, No Rxn to 10% HCl	
84'					84' sample 4/28/92 0810
				TD @ 84.5' bls	
				SWL 5/5/92 63.2	

9313090.0338

A-6000-382 (04/90)

SPECTRAL GAMMA LOG FOR WELL N-76

WHC Geosciences personnel performed spectral gamma-ray logging on well N-76 in December 1992. The log was run through the permanent casing and annular materials (i.e., bentonite and sand pack). Additional information about the logging system and the raw data used to compute radionuclide activities are available from Geosciences.

The objective of the spectral gamma-ray survey was to identify man-made gamma-ray emitting radionuclides in the subsurface. The spectral gamma log is used to quantify individual radionuclides with depth.

Spectral gamma information provided here includes a single-page log header, plots of radionuclide activity versus depth, and analysis notes. Data plots are shown for total gamma and cobalt-60. Potassium, uranium, and thorium, which are naturally occurring radionuclides, are also plotted. Cesium-137, europium-152, and europium-154 were not detected in well N-76, so the data are not presented.

The total gamma plot is the count rate (counts/sec) for all gamma-rays recorded in the spectra. No correction factor for steel casing has been applied. The total gamma plot is equivalent to the PNL gross gamma log.

The annular seal materials between the stainless steel casing and the undisturbed sediments contain natural radionuclides in higher concentrations than in the sediments. Total gamma, uranium, and thorium activities are elevated accordingly. Note that the uranium and thorium activities decrease at 55 ft in depth, where the bentonite seal ends and the sand pack begins.

The presence of annular materials may reduce the measured activity of man-made radionuclides in the soil. Cobalt-60 activity may be underestimated.

9313090.0339

Westinghouse Hanford Company
RLS Spectral Gamma-Ray Borehole Survey Log Header

Project: 100-N

Borehole	199-N-76		
Coordinates	150,622.12 N 571,560.08 E		(Lambert NAD'83)
Elevation	448.83 ft	Brass Cap	(NGVD'29)

Borehole Environment Information

Borehole fluid depth 67.1 (ft) from zero (0.0) depth reference of log

Casing size (in.)	Casing thickness (in.)	Top depth (ft)	Base depth (ft)
4	0.28	0	82

RLS Passive Spectral Gamma Survey Information

Logging Engineers R. V. Cram S. E. Kos
Log depth reference at zero (0.0) depth is ground level

Log Date	Archive file names	Log mode speed	Depth interval (ft) Top	Base	Incr
Dec 03, 1992	H1N76\A292	MSA 80sec RT	0	78	0.5
		Stations 300sec	56 & 78		

MSA: Move-Stop-Acquire
RT: Real time

Calibration and Analysis Information

RLS Calibration Date: Nov. 21, 1991
Calibration Report: WHC-SD-EN-TRP-001

Analyst Names: J. P. Kiesler
Analysis Date: Jan 19, 1993

Analysis Notes:
Radionuclides Identified: Co-60

9313090.0340

WELL N-76 SPECTRAL GAMMA RESULTS: TOTAL GAMMA AND COBALT-60.

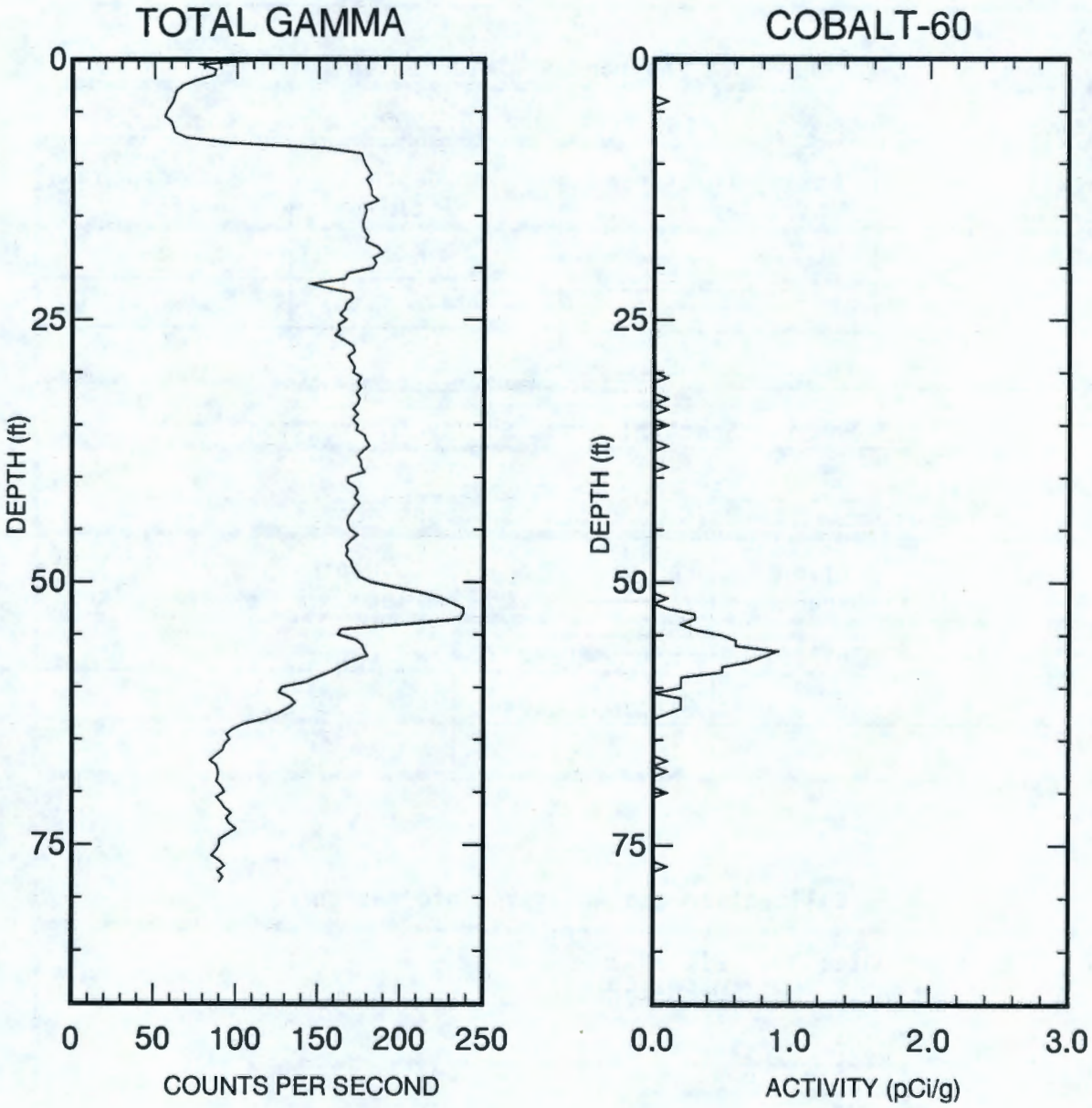

9313090.0341

WELL N-76 SPECTRAL GAMMA RESULTS: NATURALLY-OCCURRING RADIONUCLIDES.

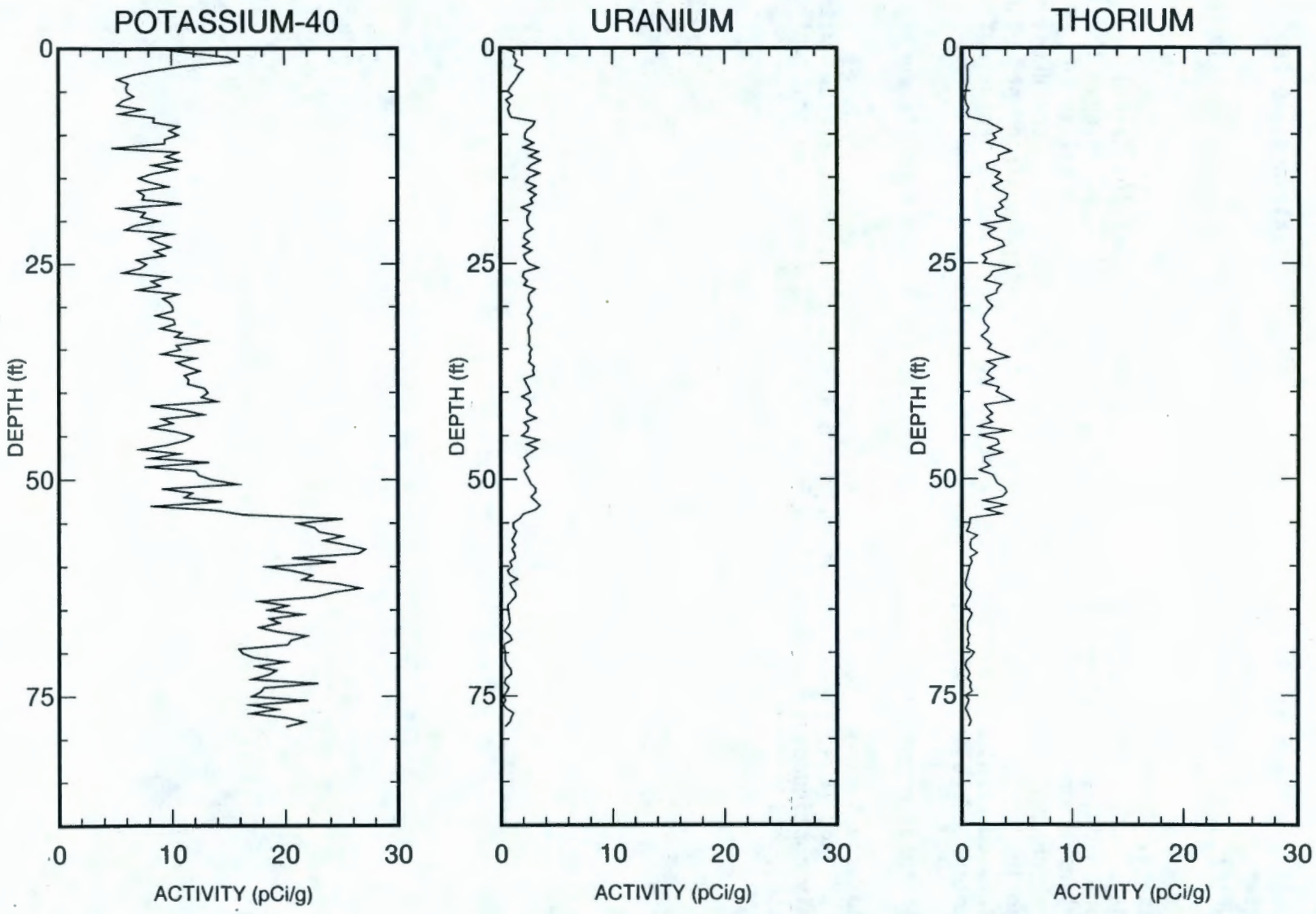

RLS Borehole Survey Report

Borehole: 199-N-76

Casing	Depth: 82′	Size: 4"	Thickness: 0.28"
Water	Depth: 67.1′		
Survey	Depth: 0 - 78′	Date: 12/03/92	
	Stations: 56 & 78′		

General Notes:
The plots for potassium, uranium and thorium show that the calculated potassium decay activities vary between about 5 and 27 pCi/g over the logged interval, and the uranium and thorium decay activities are less than 5 pCi/g. The computed potassium decay activity varies inversely with the uranium and thorium activities which is not common to the Hanford environment. The elevated uranium and thorium decay activity is believed to orginate from the bentonite sealing material.

The total gamma activity did not exceed 225 cps in the borehole survey.

Man-made Radionuclides:
Cobalt-60 (Co-60) was identified in the borehole from 4 to 77 feet with the only continuous zone being 52 to 62 feet with all calculated activities less than 1 pCi/g.

9313090.0343

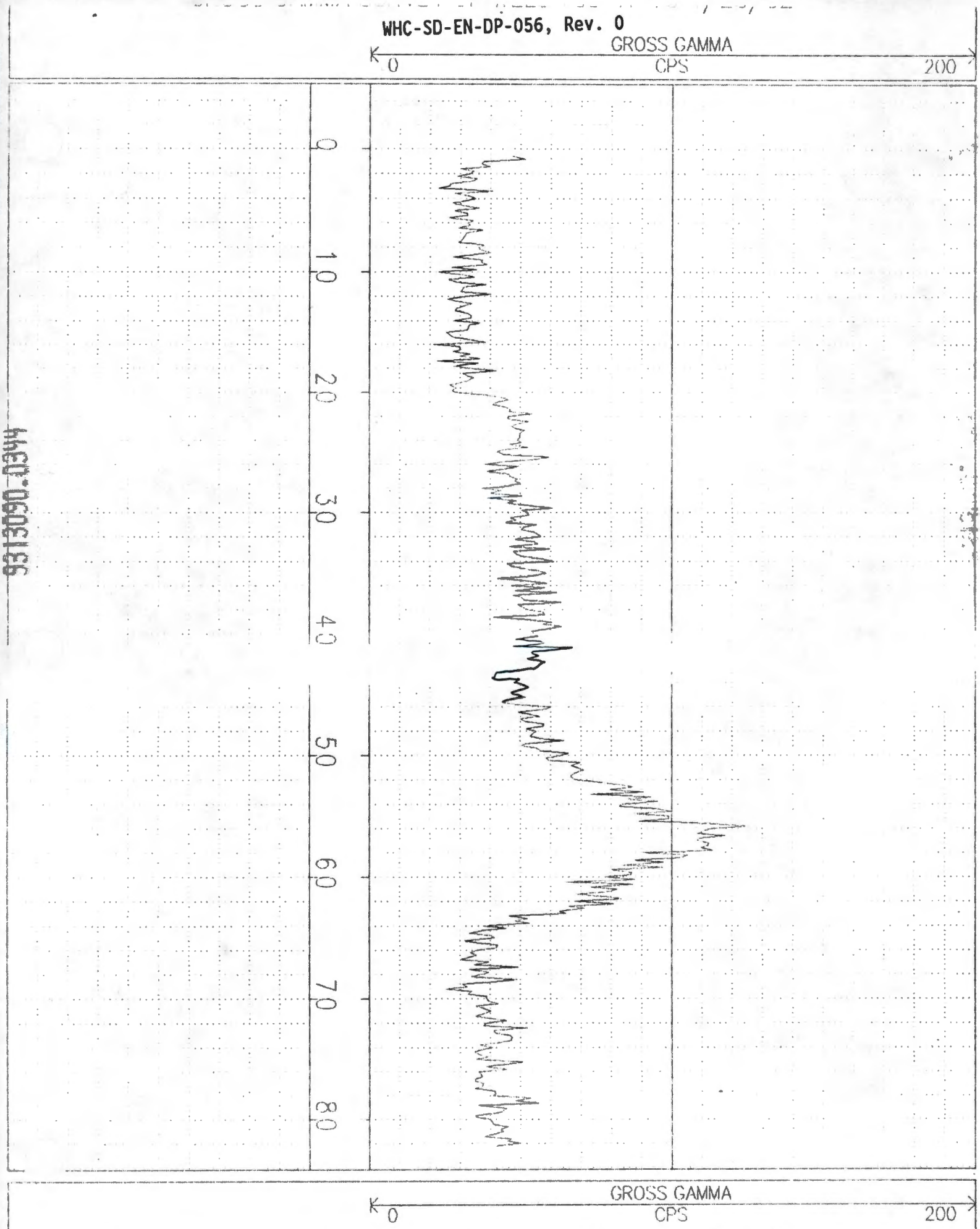

GROSS GAMMA SURVEY OF WELL 199-N-76 4/28/92

9313090.0344

9313090.0345

WHC-SD-EN-DP-056, Rev. 0

VALIDATED KDR 12/9/92 SIGNATURE/DATE

Westinghouse Hanford Company	LOG HEADER	Page 1 of 2

Well No. 199-N-76 Area 100N Date 4/28/92

Log Run #1 Log Type Gross Gamma

Elevation Datum top of brass cap Elevation 448.83'

Survey Coordinates N 150,622.12 N E 571,560.18 E

Log Measured From Ground Surface

Location Description NE of N-Reactor, Near the River

Ground Surface Elevation 448.83'

Surface Temperature NA Weather Cloudy - Warm

BOREHOLE INFORMATION

Driller Darrel Ludtke

Drill Rig Type Cable Tool	Bit Type/Diameter Drive Barrel / 10"
Borehole Diameter(s)/Depth 12"/19.7 10"/82.0	
Depth Driller 82.0	Depth Logger 82.5'
Liquid Level 63.3'	Liquid ~~Density~~ Appearance Turbid
Temperature NA	

CASING RECORD

Type " Carbon Steel Sch. 40	Interval +0.3' - 19.7'
Type " Carbon Steel Sch. 40	Interval +4.3' - 82.0'
Type	Interval
Type	Interval

Well Screen Interval NA

Comments: Return Error = +0.2' high

Centralizer used.

A-39/40

A-6000-520 (05/90)

LOG HEADER	

EQUIPMENT DATA

Logging Company PNL

Operator(s) Alan Pearson

Equipment Brand MLS Equipment Type Analog

Tool Type Gamma Ray Serial No. CG27A97

Base Calibration Date 5/91 Calibration Reference PNL-7785 UC-606

Calibration/Probe Factor 8.84x10⁻³ eU [illegible] Base Calibration Datum (eU): Position 1 297.4 eU Position 2 64.3 eU

Dead Time 11.8 μsec Warm Up Time >15 min

LOGGING INFORMATION

Log Interval From 82.5' To 0.8'

Rerun(s) 82.5 to 40.0'

Pre Survey Verification:	Position 1 288.6 eU	Position 2 52.2 eU	Background 860 c/s
Base Calibration Difference:	Position 1 8.8 eU	Position 2 12.1 eU	

Logging Speed 5 ft./min. Rerun Scales, CPS/in. 50 c/s/in

Start Time 1500 Completion Time 1730

Chart Speed(s), ft/in. 10 ft./in.

Chart Recorder Horizontal Scale, CPS/in. 50 c/s/in. Time Constant(s) TC-1

Post Survey Verification:	Position 1 282.0 eU	Position 2 52.2 eU	Background 860 c/s.
Percent Change:	Position 1 1.9%	Position 2 0.0%	

Comments Return Error = +0.2' high

Centralizer used.

High Background Due To "Golf Ball"

Witnessed and Verified by: (sign and print name) Alan Pearson / Alan Pearson Date: 4/28/92

Project: W-017H/1324N RCRA GROUNDWATER MONITORING WELL INSTALLATION		**Well No:** 199-N-77	Page 1 of 2
		Total Depth: 103.00	Static Water Level: 67.94
Date Started: 7-30-92	Date Completed: 11-18-92	Surface Elevation: 455.75	Casing Elevation: 459.44
Location: 100 N AREA		Northing: 149243.21	Easting: 571309.93
Prepared By: MD SWEENEY		Hanford N: 84555.20	Hanford W: 60858.70
Drilling Co: JENSEN	Driller: D MINGO	Drill Meth: AIR ROTARY	Drill Equip: ODEX

Screen: 10.24' OF 4" DIAMETER 10-SLOT TYPE 304 STAINLESS STEEL CONTINUOUS WIREWRAP SET FROM 84.36' TO 94.6'

Filter Pack: 20-40 MESH SILICA SAND FROM 79.4' TO 94.9'

Permanent Casing: 4" DIAMETER TYPE 304 SCHEDULE 5 STAINLESS STEEL WITH CENTRALIZERS SET TO 84.36'

Comments: OIL FROM COMPRESSOR MAY HAVE BEEN PUT DOWNHOLE (SEE N.C.R. #50008). SOIL SAMPLES REPORTED MISSING ON 11-19-92: NO PHYSICAL TESTING LAB RESULTS AVAILABLE.

Elev'n (Feet) / Depth (Feet)	Remarks/ Materials Used	Graphic Lithologic Log
	CEMENT (0.0' TO 8.0')	0-13' Gravelly SAND
450		
10	12" TEMPORARY CARBON STEEL CASING SET AT 9.2'	
		13-20' Sandy pebble/cobble GRAVEL
440		
20		20-29' Pebble/cobble GRAVEL with occasional sand lenses
430		
30		29-38' Sandy GRAVEL Some pebble lags
420	8-20 MESH BENTONITE CRUMBLES (8.0' TO 64.7')	
		38-42' GRAVEL
40		
		42-45' Sandy GRAVEL
		HANFORD/RINGOLD E CONTACT AT 45'
410		45-48' GRAVEL Reworked Ringold?
		48-49' SAND
50	4" DIAM T-304 SCH 5 STAINLESS STEEL PERM CASING W/CENTRALIZERS	49-52' Sandy GRAVEL
		52-55' SAND
400		55-56' GRAVEL
		56-57' SAND
		57-68' GRAVEL
60		
		Sand lens (63-63.5')
390	BENTONITE CHUNKS (64.7' TO 79.4') STATIC WATER LEVEL AT 67.94' (10-12-92)	
		68-97' Sandy GRAVEL
70		

Well Construction (Inches); Drill Method; Sample; Gross Gamma Log; % CaCO3; % Moist

Reviewed By: KD Reynolds / [illegible] Date: FEB. 12 1993

9313090.0347

Project: W-017H/1324N RCRA GROUNDWATER MONITORING WELL INSTALLATION

Well No: 199-N-77

WHC-SD-EN-DP-056, Rev. 0

Elev'n (Feet) / Depth (Feet)	Remarks/ Materials Used	Well Construction (Inches)	Drill Method	Sample	Graphic Lithologic Log	Gross Gamma Log	% CaCO3 / % Moist
80	20-40 MESH SILICA SAND FILTER PACK (79.4' TO 94.9')						
370	4" DIAM 10-SLOT T-304 STAINLESS STEEL CONTINUOUS WIREWRAP SCREEN (84.36' TO 94.6')						
90							
360	BENTONITE CHUNKS (94.9' TO 98.1')				RINGOLD E/RINGOLD MUD CONTACT AT 97'		
	SLUFF (98.1' TO 103')				97-100' SILT/CLAY		
100	10" TEMPORARY CARBON STEEL CASING SET AT 100.36'				100-102' Silty SAND		
	TOTAL DEPTH = 103.0'				102-103' SILT/CLAY		
350							
110							
340							
120							
330							
130							
320							
140							
310							
150							
300							
160							

Reviewed By: KD Reynolds/ KD Reynolds

Date: FEB. 1 2 1993

9313090.0348

VALIDATED
KDR 1/11/93
SIGNATURE/DATE

P1 of 4

WELL CONSTRUCTION REPORT

ification No. WHC-S-014 Rev No. 6 7

ECNs 150137, 150138, 127439, 164223, 166752, 150132, 172209, 166757, 119402, 150143, 127440

Project RCRA - W017

Location 100 N AREA

Drilling Company JENSEN Drilling

Driller D. McNeo

Other (Companies) WHC

Geologist(s) Dennis J. Anderson - WHC Ed Rafuse WHC
Mike Sweeney - HEPCO Brett Thompson (NACES)
Keith J. Swett - NACES
J.A. Coates - WHC

Well No. 199-N-77 Temp. Well No.

Coordinates N: 149,243.21 ; E: 571,309.93

Casing Elev. 459.44 Top outer casing Ground Elev. 455.75
459.45 TOP OF HYDROSTAR PLATE.

Drilling Method

Verification Method Visual observation

Criteria WHC-S-014 5.2, 5.3, 7.5 EII 6.7 Sec 6.2

			Initials	Date
Air Rotary	Air 10-103'	Mud NA	MDS	9-25-92
Cable Tool	D N/A	H N/A		
Drilling Fluid	N/A			
BACKHOE Other	0-10'		DJA	6/30/92

Geophysical Logging

Sondes	Interval	Date
GLOSS GRAMMA	3.9' - 93.4	10/2/92
	-	
	-	
	-	
	-	

Completion Data

Drilled Depth 103'

Completed Depth 94.60 FT

Date Started ~~6/30/92~~ 7/30/92 DA 11/18/93

Date Completed 11/18/92**

Static Water Level/Date 60.45/9-24-92
67.94'/10-12-92

Aquifer Testing

Type INSTANTANEOUS SLUG

Flow Meter I.D. No. NA

Cal. Due Date NA

Length of Test 1 HR

Volume Pumped NA

Drawdown NA

Date of Test 11/18/92

Completion Results

Cleaning

Verification Method Visual inspec. + doc. review

Criteria WHC-S-014 4.2.2, 7.6, 7.7 EII 5.4
WHC-CM-7-7-5.4

	Initials	Date
Drilling Tools/Rig	MDS	~~9-28-92~~ 9-14-92 9-25-92
Temporary Materials	MDS	9-14-92
Permanent Materials	KJS	10-14-92

Screen

Type	Length	Slot Size
continuous wire wrap stainless steel, 4" Dia	10.24 FT	.010

Depth(s) 84.36' - 94.60'

ification Method steel tape measurements

Criteria WHC-S-014 4.2.3, 4.2.5, 12.2.1 4.2.1

Initials KJS Date 10-13-92

Material Storage/Packing

Verification Method Visual observation

Criteria WHC-S-014 4.2.2 7.3

	Initials	Date
Mtl. Handling/Storage	KJS	10-14-92
Material Packing	KJS	10-14-92

Lubricants/Additives

Verification Method Visual observation

Criteria WHC-S-014 7.2

	Identify	Initials	Date
Additives	NONE	MDS	9-25-92
Lubricants	RN-D ROCK OIL ~~WATER GUARD~~	MDS	9-16-92

Straightness Test

Verification Method Visual observation

Criteria WHC-S-014 8.2

Initials MDS Date 9-25-92

A-6000-436 (09/90)

9313090.0349

WELL CONSTRUCTION REPORT
(continuation sheet)

199-N-77

Casing (permanent)

Type	Size	Placement
T-304 Stainless Steel	4"Ø	5.50 bgs - 84.36 bgs
		-
		-
		-

Verification Method: measurement w/ steel tape

Criteria: WHC-5-014 4.2.1, 4.2.4, 4.2.5, 12.2.1

Initials: KJS Date: 10-13-92

Well Protection

Verification Method: visual insp. w/ tape

Criteria: WHC-5-014 4.2.10

	Initials	Date
Protective Posts	ECL	12/8/92
Protective Casing	ECL	12/8/92
Site Restored	ECL	12/8/92
Cap, Hasp and Lock	ECL	12/8/92
Surface Pad	ECL	12/8/92

Annular Seal/Filter Pack * continued below

Verification Method: measurement w/ steel tape Criteria: WHC-5-014 4.2.6, 4.2.7, 4.2.8, 4.2.9

Type	Interval (Ft)	Volume (Ft³)	Initials	Date
Enviroplug coarse bentonite	94.9 - 98.1	0.35	KJS	10-14-92
20-40 sand filter pack	79.4 - 94.9	8.40	KJS	10-14-92
Enviroplug coarse bentonite	64.7 - 79.4	19.67	KJS	10-14-92
Bentonite crumbles	8.0 - 64.7	64.61	KJS	10-14-92

Well Survey/Labeling

Verification Method: Review of Survey Report

Criteria: WHC-5-014

	Initials	Date
Measurement Point/Surveyed	BRT	1-8-93
Protective Casing/Brass Cap Surveyed	BRT	1-8-93
Well Number Stenciled	ECL	12/18/92
Brass Cap Labeled	ECL	12/18/92

Pump Installation

Verification Method: visual observation

Criteria: WHC-5-014 4.2.11, 4.2.2

	Initials	Date
Pump Decon/Prep	JAC	11/18/92
Installed	JAC	11/18/92
Pump Tested	JAC	11/18/92

Other (initial if performed)

Well Abandonment _____ Downhole TV Inspection KJS Complete As-Built Diagram, Driller's/Geologist's Logs

JAC 11/18/92 Well Development

Comments/Remarks: read down paper for BACKHOE & 12" CS casing 7/20/92 - DJA,

∴ * OIL FROM COMPRESSORS MAY HAVE BEEN PUT DOWNHOLE.

① Note: NCR on Compressor oil in hole NCR #50008

	Interval (Ft)	Volume (Ft³)		
* portland cement grout	1.0 - 8.0	24.42	KJS	10-14-92

** - date well is sample ready

Reviewed By (Sign/Print Name): Kent D Reynolds / Kent D Reynolds Date: 1/11/93

A-6000-436 (09/90)

9313090.0350

WHC-SD-EN-DP-056, Rev. 0

WELL SUMMARY SHEET

Boring or Well No. 199-N-77

Sheet 1 of 2

Location in 100 N AREA

Location on 455.75'

Driller D MINGO S. MACTIMPH

Prepared By MOSWEENEY / [signature] (Sign/Print Name) Date 9-30-92 10-20-92

R.S. Swift

Project RCRA W017

Drilling Contractor JENSEN DRILLING

Drilling Method and Equipment AIR ROTARY / CD 650

Reviewed By EDWARD C. RAFUSE / Edward C. Rafuse (Sign/Print Name) Date 10/26/92

CONSTRUCTION DATA		Depth in Feet	GEOLOGIC/HYDROLOGIC DATA	
Description	Diagram 10" 12"		Graphic Log	Lithologic Description
12" OD CARBON STEEL TEMPORARY CASING. NO SHOE. SET @ 9.2'		0		0-0.5' BACKFILL GRAVEL
		5		0.5-12' SANDY GRAVEL. " "
Portland cement GROUT 7.0 Ft to 8.0 Ft		10		" "
		15		13'-20' PEBBLE/COBBLE GRAVEL. " " "
12" OD CARBON STEEL TEMPORARY CASING 0.89' SHOE. SET @ 100.36'		20		" " "
		25		20-29 PEBBLE/COBBLE GRAVEL W/OCCASIONAL SAND LENSES.
		30		" "
Bentonite crumbles 8.0 Ft to 64.7 Ft		35		29-38 SANDY GRAVEL. " "
		40		38-42' GRAVEL.
		45		42-45 SANDY GRAVEL 45-48' GRAVEL
		50		48-49 SAND 49-52 SANDY GRAVEL
		55		52-55 SAND 55-56 GRAVEL
SWL @ 60.45 on 9/24/92		60		56-57 SAND 57-68 GRAVEL SAND LENSES 63-63.5
		65		
Ex 3 plug coarse chunk bentonite 64.7 Ft to 79.4 Ft		70		68-97 SANDY GRAVEL " "
		75		" "
20-40 sand filter pack 79.4 Ft to 94.9 Ft				" "

WHC-SD-EN-DP-056, Rev. 0

WELL SUMMARY SHEET

Boring or Well No. 199-N-77

Sheet 2 of 2

Location 100 N AREA

Project WOIZ / RCRA

Elevation 455.75

Drilling Contractor JENSEN DRILLING

Driller D. MINGO S. MACKINNON

Drilling Method and Equipment AIR ROTARY / CP 650

Prepared By [illegible] Date 9-20-92

K.S. Smith (Sign/Print Name) [illegible] 10-20-92

Reviewed By EDWARD C. RAFUSE [illegible] Date 10/26/92

(Sign/Print Name)

CONSTRUCTION DATA		Depth in Feet	GEOLOGIC/HYDROLOGIC DATA	
Description	Diagram		Graphic Log	Lithologic Description
10" SET @ 100.36'	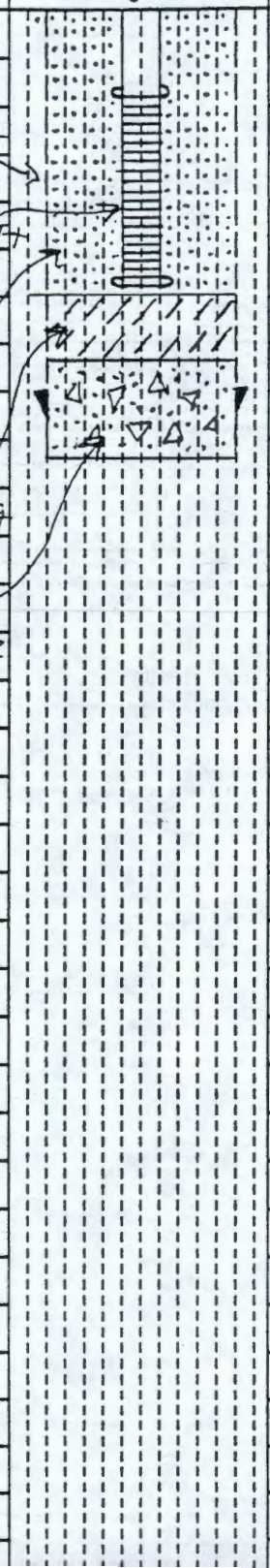			
4"ϕ stainless steel .010 slot continuous wire wrap screen 84.36 Ft to 94.60 Ft		85		
		90		
20-40 sand filter pack 79.4 Ft to 94.9 Ft		95		
		100		97-100' SILT/CLAY
				100-102 SILTY SAND
Enviroplug coarse chunck bentonite 94.9 Ft to 98.1 Ft				102-103 SILT CLAY
				TD = 103' ON 9-25-92
Slough 98.1 Ft to ~~100~~ 103 Ft KJS 10-20-92				SWL = 60.45 ON 9-24-92

KAISER ENGINEERS HANFORD	WHC-SD-EN-DP-056, Rev. 0 SURVEY DATA REPORT	Request No. 9 3 1 0 5 7

Project/W.O. No.	Title	File No.
W-017H	Nine Odex CM Wells	2 9 9 E 2 5

Job No.	Prepared By	Date	Reviewer	
CR-9752	RL Hackwith	12/30/92	V. Coyne	1 2

DESCRIPTION OF WORK	ACCEPTABILITY (Within Plan Tolerance)	DISTRIBUTION	
Horizontal (NAD'83) and vertical (NGVD'29) location of monitoring wells.	Yes XX	Survey File	OR
	No ☐	Field Project File	1
	NA ☐	P Collier	1
	TBD by Requestor ☐	L Dietz	1
		J Rieger	1
		D Weekes	1

SURVEY RESULTS AND COMMENTS

Control Monuments: Landfill Site

LF-1
N:131,301.762
E:579,339.132

C.P."D"
N:130,947.087
E:579,137.752

NOTE: Horizontal control points used were part of a traverse with a linear closure greater than 1:50,000.

USGS BM MON
W63
EL. 514.864

WELL #	COORDINATES ℄ CASING PLANT	LAMBERT WCS83S (mtrs)	ELEVATION (feet) NGVD 29 BRASS CAP	HYDROSTAR	TOP OF CASING
199-N-77	100N N: 5521.9 W: 5819.8	N: 149,243.21 E: 571,309.93	455.75	459.45	459.44
699-26-34B	200E N: 25,782.6 W: 33,716.8	N: 131,352.50 E: 579,629.52	526.47	530.29	530.27
699-25-34D	200E N: 25,253.6 W: 33,847.9	N:131,191.16 E:579,589.97	534.47	537.92	537.91

rol Monuments: 100N

100N-1
N: 148,992.908
E: 571,887.337

100N-2
N: 149,644.403
E: 571,811.368

S-324
USC&GS
EL.=466.462

NOTE: Horizontal Control points used were part of a traverse with a linear closure greater than 1:48,000.

KAISER ENGINEERS
HANFORD

FIELD SKETCH

Attachment To Or Description: Nine Odex CM Wells - Continued

Sheet 2 of 2

Control Monuments: Grout

SL-2	SL-3	BM MON.
N:135,705.555	N:135,916.127	2E-18
E:575,938.675	E:575,938,323	EL=678.331

Horizontal Control Monuments used to locate wells were part of a traverse with a linear closure greater than 1:50,000. Vertical control monuments used was based on 5.8 mile loop with a closure of .024 ft.

WELL #	COORDINATES ℄ CASING		ELEVATION (feet)		
	PLANT	LAMBERT WCS83S (mtrs)	BRASS CAP	HYDROSTAR	TOP OF CASING
299-E25-45	200E N: 39,939.7 W: 44,973.2	N: 135,659.15 E: 576,185.55	675.74	678.46	678.45
299-E25-47	200E N: 40,835.3 W: 46,306.1	N: 135,930.98 E: 575,778.55	670.41	673.78	673.77
299-E25-48	200E N: 40,456.8 W: 46,816.1	N: 135,815.16 E: 575,623.43	679.68	682.32	682.31
299-W27-2	200W N: 33,494.3 W: 75,430.7	N: 133,670.63 E: 566,908.55	674.10	677.13	677.11
699-41-42	200E N: 41,270.3 W: 41,898.1	N: 136,068.17 E: 577,122.21	640.32	643.92	643.91
699-44-39B	200E N: 43,426.3 W: 39,140.4	N: 136,727.61 E: 577,960.80	509.62	513.41	513.40

Control Monuments: 200W

RAG	FLAG	BM B.C. MONS.
N:133,758.279	N:133,900.567	299-W26-11
E:567,152.333	E:566,321.472	299-W26-12

Vertical control points used were based on a 3.3 mile level run with a closure of -0.037 ft.

9313090.0354

BOREHOLE LOG

VALIDATED
KDR 1/11/93
SIGNATURE/DATE

Boring or Well No. 199-N-77

Sheet 1 of 6

Location: 100 N Area

Project: RCRA W017

Elevation: 455.75'

Drilling Contractor: Jensen

Driller: D. MINGO

Drilling Method and Equipment: BACKHOE / AIR ROTARY

Prepared By: Dennis J. Anderson (Sign/Print Name) Date: 6/30/92

Reviewed By: EDWARD RAFFAS Edward C. Raffas (Sign/Print Name) Date: 10/8/92

Depth (0)	Sample Type and No.	Sample Blows or Recovery	Graphic Log	Sample Description: Soil Classification, Particle Size Distribution, Color, Moisture Content, Sorting, Angularity, Mineralogy, Reaction to HCl.	Comments: Depth of Casing, Drilling Rate, Casing Size & Type, Bit Size, Water Level
				5-13' SANDY GRAVEL	.5' BACKFILL gravel for parking
				GRAVEL: 45% SAND: 54% SILT: 1%	lot.
				CP-15% CG-60% COLOR WET - 10YR 3/3 DK BRN	
				MP-50% MG 30% COLOR DRY - 10YR 7/2 LT GRAY	
				FP-35% FG-10%	
				GRAVEL: MAFIC - 80%, FELSIC - 5%, QTZ - 15%	
				SUBANGULAR, SUBROUNDED, ROUNDED; SAND:	
	1 rad 2 lith 1 moist	BACKHOE		MAFIC - 80%, FELSIC - 5%, QTZ - 15% ANGULAR	
				SUBANGULAR, SUBROUNDED. MOIST	
5'				STRONG RXN TO HCl @ 5'; NO RXN	5' sample 6/30/92 @ 1550
				@ 10'	
	1 RAD 2 LITH 1 MOIST	BACKHOE			10' sample 6/30/92 @ 1640
	1 RAD 2 LITH 1 CaCO3 - MOIST				
				13-20 PEBBLE-COBBLE GRAVEL	
				GRAVEL: 65%, SAND 34% SILT 1%	
				CP-20% CG-30% COLOR DRY: 5Y 5/1 GRAY	
15				MP-70% MG-50% COLOR WET: 5Y 3/1 VDK GRAY	15' @ 1527 9-16-92
	1 RAD 2 LITH 1 CaCO3 - H2O	AIR ROTARY		FP-10% FG-20%	
				GRAVEL: MAFIC - 85%, FELSIC - 5%, QTZ - 10%.	
				SUBANGULAR SUBROUNDED ROUNDED; SAND: 85%	
				MAFIC - 85%, FELSIC - 5%, QTZ - 10%, ANGULAR	
				SUBANGULAR DRY. NO RXN TO HCl.	

9313090.0355

A-6000-382 (04/90)

BOREHOLE LOG

Boring or Well No. 199-N-77

Sheet 2 of 6

Location 100-N-~~77~~ 9-17-92 AREA

Project W017/100-N

Elevation 455.75'

Drilling Contractor Jensen

Driller D. MINGO

Drilling Method and Equipment AIR ROTARY / CP-650

Prepared By [illegible] (Sign/Print Name) Date 9-17-92

Reviewed By EDWARD C. RAFUSE Edward C. Rafuse (Sign/Print Name) Date 10/18/92

Depth (20)	Sample Type and No.	Sample Blows or Recovery	Graphic Log	Sample Description: Soil Classification, Particle Size Distribution, Color, Moisture Content, Sorting, Angularity, Mineralogy, Reaction to HCl.	Comments: Depth of Casing, Drilling Rate, Casing Size & Type, Bit Size, Water Level
	1RAD 2LITH 1CaCO3-H2O			20 - 29 PEBBLE-COBBLE GRAVEL	20' @ 1704 9-16-92
				W/ OCCASIONAL SAND	
				LENSES	
				PREDOMINANTLY SAME	
				AS 13-20'	
					25 @ 0927 9-17-92
25	1RAD 2LITH 1CaCO3-H2O				
				29-38 SANDY GRAVEL	
30	1RAD 2LITH 1CaCO3-H2O			GRAVEL: SAND: SILT: 1%	30' @ 1002 9-17-92
				CP-10% CG-70%	
				MP-60% MG-20%	
				FP-30% FG-10%	
				PREDOMINANTLY SAME	
				MINERALOGY.	
				SOME PEBBLE LAYS.	
35	1RAD 2LITH 1CaCO3-H2O				35 @ 1333 9-17-92
				38-42 GRAVEL	
				GRAVEL: 89% SAND: 5% SILT: 1%	Split Spoon - 38'-40'
	Geochem Samples	ST		CP-35% CG-30%	
				MP-50% MG-35%	
				FP-15% FG-35% A-50	
				MINERALOGY PREDOMINANTLY A.A.	

9313090.0356

BOREHOLE LOG

Boring or Well No. 199-N-77

Sheet 3 of 6

Location 100-N

Project W017/100N

Elevation

Drilling Contractor JENSEN

Driller D. MINGO

Drilling Method and Equipment AIR ROTARY / CP-650

Prepared By (Sign/Print Name) / MD SWEENEY

Date 9-23-92

Reviewed By (Sign/Print Name) EDWARD C. RAFFAT / Edward C. Raffat

Date 10/13/92

Depth (40)	Sample Type and No.	Sample Blows or Recovery	Graphic Log	Sample Description: Soil Classification, Particle Size Distribution, Color, Moisture Content, Sorting, Angularity, Mineralogy, Reaction to HCl.	Comments: Depth of Casing, Drilling Rate, Casing Size & Type, Bit Size, Water Level
	1RAD 2LITH 1CaCO3-H2O			38-42 GRAVEL	40@ 937 9-23-92
				42-45 SANDY GRAVEL	45 @ 1047 9-23-92
				G: 60%, SND: 39%, SLT: 1%	
				CP-20% CG-45% COLOR DRY: 2.5Y 5/0 GREY	REWORKED RINGOLD?
				MP-50% MG-30% COLOR WET: 2.5Y 2/0 BLACK	
				FP-30% FG-25%	
				GRAVEL: MAFIC-75%, FELSIC-20%, QTZ: 5%, ANGULAR	
				SUBANGULAR, SUBROUNDED; SAND: MAFIC-80%	
45				FELSIC-15%, QTZ-10% SUBROUNDED, ROUNDED,	
	1RAD 2LITH 1CaCO3-H2O			ANGULAR. NO RXN TO HCl.	
				45-48' GRAVEL	48 @ 1118 9-23-92
				G: 85%, SND: 4%, SLT: 1%	
				CP-35% CG-60% COLOR DRY: 2.5Y 6/0 GREY	
				MP-45% MG-30% COLOR WET: 2.5 3/0 V. DK GREY	
				FP-20% FG-10%	
				GRAVEL: MAFIC-60%, FELSIC-10%, QTZ: 30%	
				ANGULAR, SUBANGULAR, SUBROUNDED. SAND: MAFIC-	
				55%, FELSIC-30%, QTZ-15%, SUBROUNDED, ANGULAR	
50				SUBANGULAR NO RXN TO HCl.	
	1RAD 2LITH 1CaCO3-H2O	ST		48-49 SAND	Split Spoon: 50'-52'
				GRAVEL: 5%, SAND: 95%	
				MP-40% CG-20% COLOR DRY:	
				FP-60% MG-40% COLOR WET:	
				FG-40%	
				GRAVEL: MAFIC-50%, FELSIC-30%, QTZ-20%	
				ANGULAR, SUBANGULAR, SUBROUND, SAND: MAFIC-	
				20%, FELSIC-60%, QTZ 20%, ANGULAR, SUBANGULAR	
				SUBROUND NO RXN TO HCl.	
55				49-52 SANDY GRAVEL	50' @ 1600 9-23-92
	1RAD 2LITH 1CaCO3-H2O			MINERALOGY SAME AS 45-48	
				G: 60%, SAND 39%, SILT 1%	
				52-55 SAND	
				PREDOMINANTLY SAME AS 48-49	
				55-56 GRAVEL	55' @ 1610 9-23-92
				PREDOMINANTLY SAME AS 45-48	
				56-57 SAND	
				PREDOMINANTLY SAME AS 48-49	
				57-68 GRAVEL A-51	
				PREDOMINANTLY SAME AS 45-48	

AIR ROTARY

9313090.0357

BOREHOLE LOG

Boring or Well No. 199-N-77

Sheet 4 of 6

Location 100N

Project W017-100N

Elevation

Drilling Contractor JENSEN

Driller D. MINGO

Drilling Method and Equipment AIR ROTARY / CP-650.

Prepared By (Sign/Print Name) / MO SWEENEY Date 9-24-92

Reviewed By (Sign/Print Name) EDWARD C. RAFUSE Date 10/8/92

Depth (60)	Sample Type and No.	Sample Blows or Recovery	Graphic Log	Sample Description: Soil Classification, Particle Size Distribution, Color, Moisture Content, Sorting, Angularity, Mineralogy, Reaction to HCl.	Comments: Depth of Casing, Drilling Rate, Casing Size & Type, Bit Size, Water Level
	1RAD 2LITH 1CaCO3-H2O			57-68 GRAVEL	60' @ 1637 9-23-92
				PREDOMINATELY SAME AS	SWL @ 60.45' 9-24-92
				45-48	
				SAND LENS @ 63-63.5	
		ST			
65				SPLIT SPOON - 63'-65'	65' @ 1035 9-24-92
	1RAD 2LITH 1CaCO3-H2O				
				68-97 SANDY GRAVEL	68 @ 1100 9-24-92
				GRAVEL: 65% SAND: 32%, SILT 3%	
				CP-70% CG-20% COLOR DRY: 2.5Y6/2 LT YELLOW BRN	
				MP-50% MG-40% COLOR WET: 2.5Y4/2 LT GREY BRN	
				FP-20% FG-40%	
70				GRAVEL: MAFICS-60%, FELSIC-20%, QTZ-20%	70' @ 1110 9-24-92
	1RAD 2LITH 1CaCO3			ANGULAR, SUBANGULAR, SUBROUND. SAND: MAFIC-	
				50%, FELSICS-25%, QTZ: 25% ANGULAR,	
				SUBANGULAR	
				69-70' DECREASE IN SILT (1%)	
				68-69 - MILD RXN TO HCl.	
				~~INCREASE~~ DECREASE IN SILT (2%)	
				DECREASE IN GRAVEL SIZE (MP-75%)	
				70-77 NO RXN TO HCl	
				INCREASE IN SAND (40%)	
75				77-77.5 SAME AS 68-97' DESCRIPTION.	
	1RAD 2LITH 1CaCO3				75' @ 1650 9-24-92

AIR ROTARY

9313090.1358

BOREHOLE LOG

Boring or Well No. 199-N-77

Sheet 5 of 6

Location 100N

Project W017/100N

Elevation

Drilling Contractor JENSEN

Driller D. MINOR

Drilling Method and Equipment AIR ROTARY / CP-650

Prepared By (Sign/Print Name) Date 9-25-92

Reviewed By (Sign/Print Name) Edward C. Rafuse Date 10/18/92

Depth (30)	Sample Type and No.	Sample Blows or Recovery	Graphic Log	Sample Description: Soil Classification, Particle Size Distribution, Color, Moisture Content, Sorting, Angularity, Mineralogy, Reaction to HCl.	Comments: Depth of Casing, Drilling Rate, Casing Size & Type, Bit Size, Water Level
	1 RAD 2 LITH 1 CaCO3	AIR ROTARY		68 - 97 SANDY GRAVEL SEE PAGE 4 FOR DESCRIPTION	80' @ 0723 9-25-92
85	1 RAD 2 LITH 1 CaCO3				85' @ 0844 9-25-92
90	1 RAD 2 LITH 1 CaCO3				90' @ 0903 9-25-92
95	1 RAD 2 LITH 1 CaCO3				95' @ 0920 9-25-92
				97-100 SILT/CLAY MASSIVE, MINOR % OF SAND (1%). COLOR WET: 5Y 6/2 Olive Gray COLOR DRY: 5Y 7/2 Lt Gray STRONG RXN TO HCl.	

9313090.0359

BOREHOLE LOG

Boring or Well No. 199-N-77

Sheet 6 of 6

Location 100 N

Project W017/100N

Elevation

Drilling Contractor JENSEN

Driller D. Mainco

Drilling Method and Equipment AIR ROTARY / CP-650

Prepared By [illegible] (Sign/Print Name) Date 9-25-92

Reviewed By Edward C. Rafuse (Sign/Print Name) Date 10/8/92

Depth (100)	Sample Type and No.	Sample Blows or Recovery	Graphic Log	Sample Description: Soil Classification, Particle Size Distribution, Color, Moisture Content, Sorting, Angularity, Mineralogy, Reaction to HCl.	Comments: Depth of Casing, Drilling Rate, Casing Size & Type, Bit Size, Water Level
	1 RAD 2 LITH 1 CHLOR	AIR ROTARY		100-102 SILTY SAND	100' @ 0937 9-25-92
				FG: 100% SAND: 60% SILT: 40%	
	1 RAD 2 LITH 4 ST LINERS	ST		COLOR WET: 5Y 6/2 LIGHT GRAY	
				COLOR DRY: 5Y 7/2 LIGHT GRAY	
				SAND MAFIC 15%, FELSIC: 70%, QTZ: 15%	
				MILD RXN TO HCl.	
				102-103 SILT/CLAY	101-103 @ 1240 9-25-92
				SAME AS 97-100	
105					TD @ 103'
					TD 10" @ 100.36'

9313090.0360

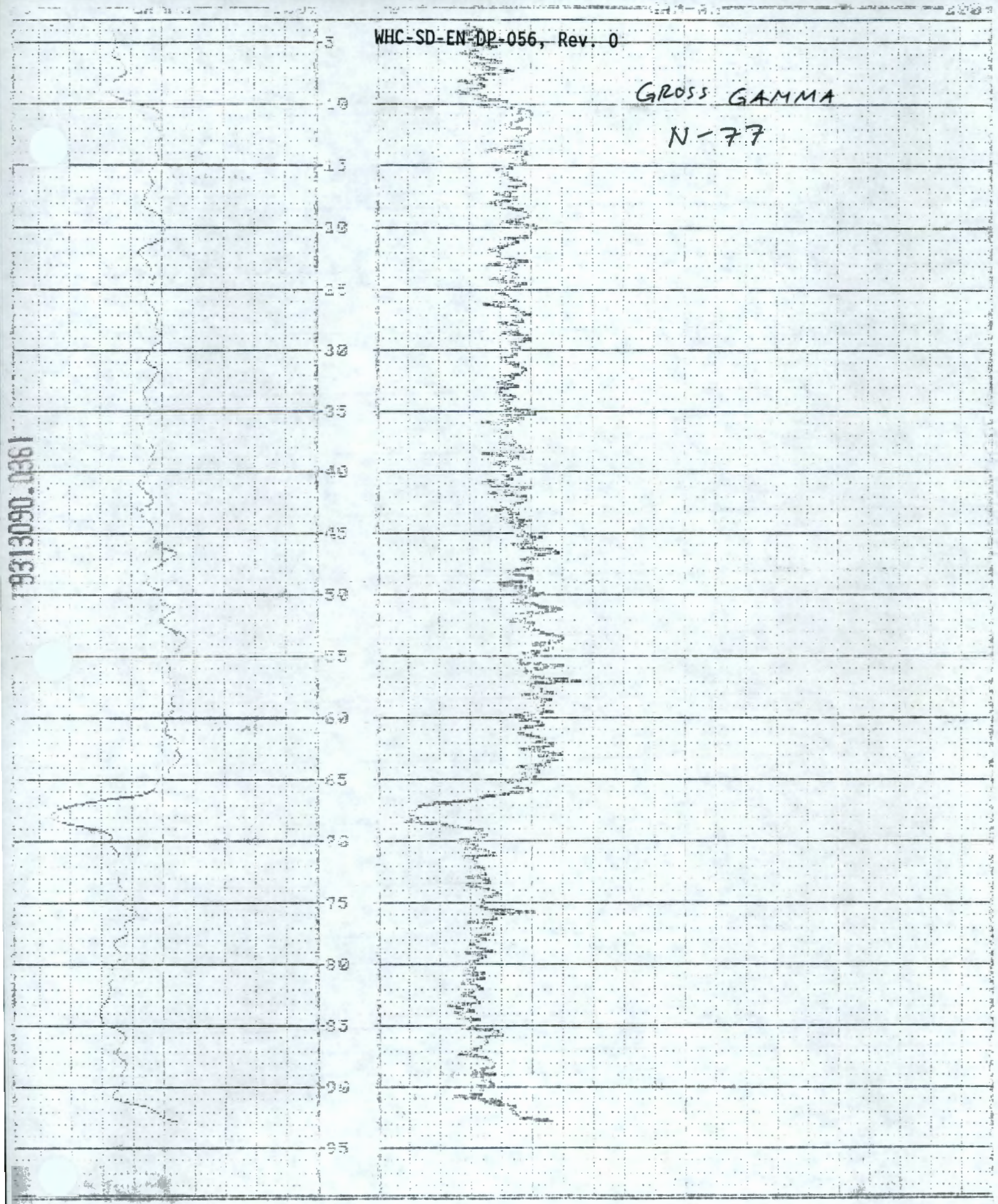

9313090.0361

N-77

OUT:I:\100N\199N77.GA2 (OM) Recs:179 Bytes:3746 Free:21448K
12.8 4.9 45.2 42.7 -19.5 -20.5

GAMMA 100 | CAM-AN 200

45
50
55
60
65
70
75
80
85
90
95

9313090.0362

OUT:I:\100N\199N77.GA2 (OM) Recs:14 Bytes:661 Free:21456K
92.8 6.0 55.1 52.1 -19.9 -22.0

GAMMA 100 | CAM-AN 200

Gross Gamma 93.4' -3.9' 10/12/92

WHC-SD-EN-DP-066, Rev. 0

Westinghouse Hanford Company — VALIDATED Kirk Wahl — LOG HEADER — Page 1 of 2

Well No.	199-N-77	Area	100N
Date	10/12/92		
Log Run	#1	Log Type	Gross Gamma
Elevation Datum	Brass Cap	Elevation	455.75
Survey Coordinates	149,243.21 N	571,309.93 E	
Log Measured From	Ground Surface		
Location Description	South side of 100N Area		
Ground Surface Elevation	455.75		
Surface Temperature	NA	Weather	Overcast - Cool

BOREHOLE INFORMATION

Driller	Dennis Mipap (Jensen Drilling)		
Drill Rig Type	CME	Bit Type/Diameter	Air Hammer 10"
Borehole Diameter(s)/Depth	12"/9.2' 10"/102.0'		
Depth Driller	102.0'	Depth Logger	93.4' (Column in borehole)
Liquid Level	60.45'	Liquid Density	Air Advance Clean
Temperature	NA		

CASING RECORD

Type	12" Carbon Steel Sch.40	Interval	0.0' - 9.2'
Type	10" Carbon Steel Sch.40	Interval	9.2' - 102.76'
Type		Interval	
Type		Interval	
Well Screen Interval	NA		

Comments: Return Error = 0.2' high
Centralizer used

A-57/58

A-6000-120 (03/93)

Page 2 of 2

LOG HEADER

EQUIPMENT DATA

Logging Company	PNL		
Operator(s)	Alan Pearson	Equipment Type	Analog
Equipment Brand	ALIS	Serial No.	6627A87
Tool Type	Gamma Rad	Calibration Reference	PNL-PROCO UC-6016
Most Calibration Date	5/92	Position 1	6651 cpm
Calibration/Probe Factor	0.00 cpm/pCi/g	Position 2	
Calibration Datum Field:	Postlog: 3151 cpm		
Dead Time	183 nsec	Return Up Time	715 msec

LOGGING INFORMATION

Log Interval From	93.4' to 60.0'	TD	391
Barrel(s)	93.4' to 60.0'	Position 1	660 cpm
Background	83.0 cps		
Pre Survey Verification:	Position 1	311.2 cpm	Position 2
Background	80.0 cps		
Post Calibration Difference:	Position 1	3.9 cpm	Position 2
Background	0.0 cps		
Logging Speed	5.4'/min.	Return Scale/Offset	50 cps/in.
Start Time	1100	Completion Time	1215
Chart Speed(s), Dim.	10'/in.		
Chart Recorder Horizontal Scale, Offset	50 cps/in.	Time Constant(s)	TC-1
Post Survey Verification:	Position 1	3083 cpm	Position 2
Background	80 cps		
Percent Change:	Position 1	0.4%	Position 2
Background	3.0%		

Comments: Return Error = 0.2' high
Centralizer used

Witnessed and Verified by: (Sign and print name) Alan Pearson — Date: 10/12/92

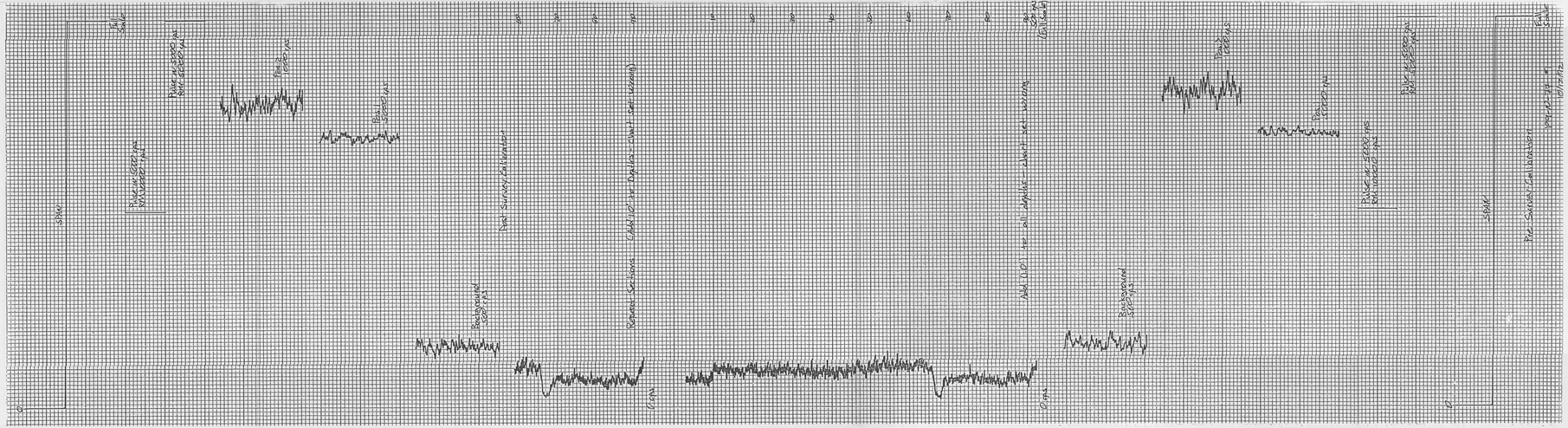

9313090.0063

APPENDIX B

SEDIMENT SAMPLE DATA

9313090.0364

CONTENTS

Well 199-N-75 . . . . . B-2
Well 199-N-76 . . . . . B-4
Well 199-N-77 . . . . . B-7

9313090.0365

9313090.0366

APPENDIX B:

SEDIMENT SAMPLE DATA

Samples were collected during drilling for $CaCO_3$, moisture, and radiological/chemical analyses. Radiological and chemical data will be presented in an addendum to this report after they are interpreted. The table below summarizes which analyses were run for each well.

Well	$CaCO_3$ and Moisture	Radiological and Chemical
N-75	Every 5 ft from 5 to 50 ft. Samples not collected from 55 ft to total depth due to radiation contamination.	Samples analyzed from 2, 5, 9, 56, and 68 ft.
N-76	Every 5 ft from 5 to 50 ft and from 75 to 84 ft. Samples not collected from 55 to 70 ft due to radiation contamination	Samples analyzed from 2, 5, 24, 55, and 65 ft.
N-77	Samples missing; no physical analyses done.	Samples analyzed from 23, 38, 50, 63, and 70 ft. Radionuclide analyses not requested.

Samples for moisture analysis were mistakenly collected below the water table as well as in the unsaturated zone. Results of some of the moisture analyses below the water table are unexpectedly low (e.g. 1.65% in well N-76 at 75 ft), indicating a potential problem in collecting, storing, or analyzing the samples.

1 of 1

ENVIRONMENTAL RESTORATION HEALTH AND SAFETY

VALIDATED
KDR 12/9/92
SIGNATURE DATE

Requested by:	Phone No.	Well No.	Date:
Ed Rafuse (H5-29)		199-N-75	

Sample No. (Depth)	Sample Date	Sample Description	Analysis Date	Lab No.	Results Beta/Gamma (pCi/g)	Results Alpha (pCi/g)
5'	4-22-92	Soil	4-23-92	0746-92	12	1
10'	4-22-92		4-23-92	0747-92	18	1
15'	4-22-92		4-23-92	0748-92	7	1
20'	4-22-92		4-23-92	0749-92	9	1
25'	4-22-92		4-23-92	0750-92	8	<D
30'	4-24-92		4-27-92	0772-92	12	<D
35'	4-24-92		4-27-92	0773-92	7	<D
40'	4-24-92		4-27-92	0774-92	8	<D
45'	4-24-92		4-27-92	0775-92	12	1
50'	4-24-92		4-27-92	0776-92	30	1

Performed By: C. Albesio Date: 5-8-92

Supervisor Review: [signature] Date: 5/11/92

Page: 1 of 1

9313090.0367

9313090.0368

VALIDATED
KDR 12/9/92
SIGNATURE/DATE

J.C. McGuffey
3-4590/SO-10

6/02/92

199-N-75 TEST RESULTS SUMMARY SHEET

Page 1 of 1

Sample No.	Well No.	Description	Depth	CC (%)	Mois (%)	Por (%)	SpG/F	SpG/C	SpG/Avg	Den/D (g/cc)	Sat K (cm/s)	Notes
2-1853	199-N-75	RCRA	5	1.2	9.02	NR	NR	NR	NR	NR	NR	NR
2-1854	199-N-75	RCRA	9.5	1.4	12.78	NR	NR	NR	NR	NR	NR	NR
2-1855	199-N-75	RCRA	15	0.9	2.49	NR	NR	NR	NR	NR	NR	NR
2-1856	199-N-75	RCRA	20	0.9	6.91	NR	NR	NR	NR	NR	NR	NR
2-1857	199-N-75	RCRA	25	0.7	2.13	NR	NR	NR	NR	NR	NR	NR
2-1858	199-N-75	RCRA	30	0.5	3.03	NR	NR	NR	NR	NR	NR	NR
2-1859	199-N-75	RCRA	35	0.5	3.19	NR	NR	NR	NR	NR	NR	NR
2-1860	199-N-75	RCRA	40	0.7	2.55	NR	NR	NR	NR	NR	NR	NR
2-1861	199-N-75	RCRA	45	0.7	4.91	NR	NR	NR	NR	NR	NR	NR
2-1862	199-N-75	RCRA	50	3.1	3.68	NR	NR	NR	NR	NR	NR	NR

NR = Not Requested

ENVIRONMENTAL RESTORATION HEALTH AND SAFETY

VALIDATED
KDR 12/9/92
SIGNATURE/DATE

Requested by:	Phone No.	Well No.	Date:
Ed Refuse (H5-29)		199-N-76	

Sample No. (Depth)	Sample Date	Sample Description	Analysis Date	Lab No.	Results Beta/Gamma (pci/g)	Results Alpha (pci/g)
5'	4-22-92	SOIL	4-23-92	0751-92	9	1
10'	4-22-92		4-23-92	0752-92	14	<D
15'	4-22-92		4-23-92	0753-92	6	<D
20'	4-22-92		4-23-92	0754-92	12	<D
25'	4-22-92		4-23-92	0755-92	14	1
30'	4-22-92		4-23-92	0756-92	8	1
35'	4-22-92		4-23-92	0757-92	12	<D
40'	4-22-92		4-23-92	0758-92	12	1
45'	4-24-92		4-27-92	0770-92	13	1
50'	4-24-92		4-27-92	0771-92	15	<D

Performed By: C. Allessio Date: 5-8-92

Supervisor Review: [signature] Date: 5/10/92

Page: 1 of 2

9313090.0369

ENVIRONMENTAL RESTORATION HEALTH AND SAFETY

Requested by:			Phone No.	Well No. 199-N-76		Date:
Sample No. (Depth)	**Sample Date**	**Sample Description**	**Analysis Date**	**Lab No.**	**Results Beta/Gamma (pci/g)**	**Results Alpha (pci/g)**
75'	5-8-92	Soil	5-12-92	0922-92	19	<D
80'	5-8-92	↓	5-12-92	0923-92	15	<D
84.5	5-8-92	↓	5-12-92	0924-92	20	<D

Performed By: C. Alessio

Date: 5-12-92

Supervisor Review: [signature]

Date: 5/12/92

Page: 2 of 2

A-6000-829 (10/91)

9313090.0370

9313090.0321

VALIDATED
KDR 12/9/92
SIGNATURE/DATE

J.C. McGuffey
3-4590/SO-10

6/02/92

199-N-76 TEST RESULTS SUMMARY SHEET

Page 1 of 1

Sample No.	Well No.	Description	Depth	CC (%)	Mois (%)	Por (%)	SpG/F	SpG/C	SpG/Avg	Den/D (g/cc)	Sat K (cm/s)	Notes
2-1863	199-N-76	RCRA	5	0.7	1.72	NR	NR	NR	NR	NR	NR	NR
2-1864	199-N-76	RCRA	10	0.9	2.59	NR	NR	NR	NR	NR	NR	NR
2-1865	199-N-76	RCRA	15	0.7	5.24	NR	NR	NR	NR	NR	NR	NR
2-1866	199-N-76	RCRA	20	0.7	5.72	NR	NR	NR	NR	NR	NR	NR
2-1867	199-N-76	RCRA	25	1.7	15.38	NR	NR	NR	NR	NR	NR	NR
2-1868	199-N-76	RCRA	30	0.7	3.87	NR	NR	NR	NR	NR	NR	NR
2-1869	199-N-76	RCRA	35	2.4	3.32	NR	NR	NR	NR	NR	NR	NR
2-1870	199-N-76	RCRA	37	3.1	4.54	NR	NR	NR	NR	NR	NR	NR
2-1871	199-N-76	RCRA	40	2.4	3.46	NR	NR	NR	NR	NR	NR	NR
2-1872	199-N-76	RCRA	45	3.8	1.85	NR	NR	NR	NR	NR	NR	NR
2-1873	199-N-76	RCRA	50	0.7	1.40	NR	NR	NR	NR	NR	NR	NR
2-1874	199-N-76	RCRA	75	0.9	1.65	NR	NR	NR	NR	NR	NR	NR
2-1875	199-N-76	RCRA	80	1.7	3.32	NR	NR	NR	NR	NR	NR	NR
2-1876	199-N-76	RCRA	84	2.6	17.09	NR	NR	NR	NR	NR	NR	NR

NR = Not Requested

Note to File for Well 199-N-77
December 10, 1992

Soil samples collected during drilling of well 199-N-77 were reported missing from the wellsite on November 19, 92 and have not been located to date. As a result, the Chain of Custody forms are incomplete and no analytical results are available to date.

9313090.0372

THIS PAGE INTENTIONALLY
LEFT BLANK

APPENDIX C

WELL DEVELOPMENT AND PUMP INSTALLATION

9313090.0373

CONTENTS

Well 199-N-75 . . . . . C-1
Well 199-N-76 . . . . . C-6
Well 199-N-77 . . . . . C-11

9313090.0374

VALIDATED KDR 12/9/92 SIGNATURE/DATE

p. 1 of 7

EQUIPMENT CONFIGURATION AND WELL HEAD DIAGRAM

Designation 199-N-75 Depth 87.48' BTOC

Equipment Configuration

Item	Description
1	HERMIT DATA LOG. SN-1KB-246
2	TRANSDUCER SN-1920
3	PUMP (1½ HP Grundfos)
4	SAMPLING PORTS
5	SHUT OFF VALVES

Diagram

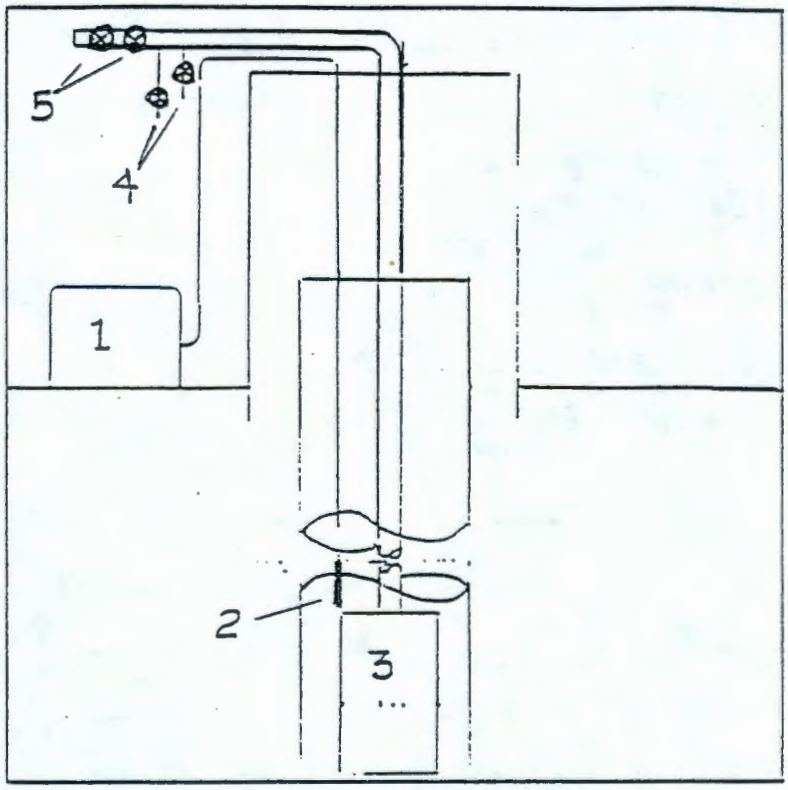

Well Head

Comments

Due to Potential RAD Contamination all Purge water was collected in a Regulated tanker truck, all development material (pipe + pump) that came in contact w/ the water was drummed and handled as contaminated waste.

BTOC - below top of casing

Diagram

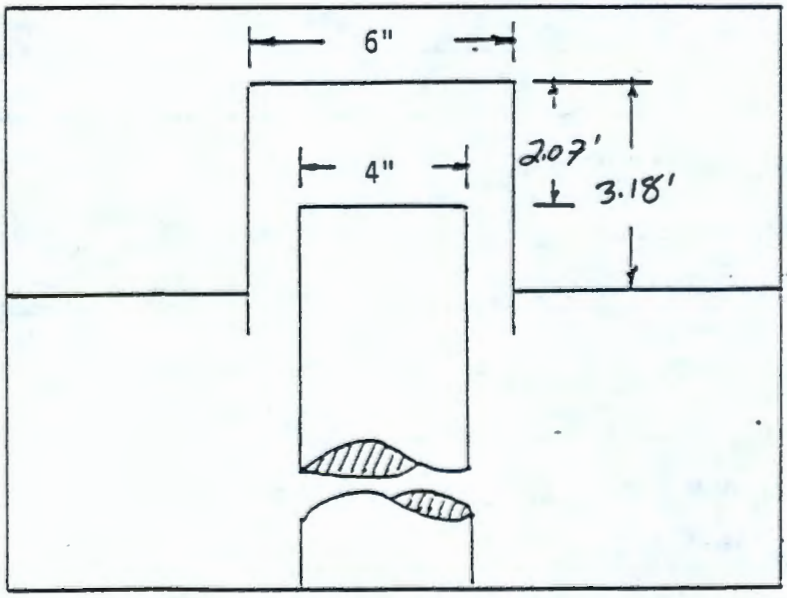

Signature of Recorder Robert S. Edrington Date 7/20/92

9313090.0875

p. 2 of 7

WELL DEVELOPMENT FORM

Page 1 of 1

Well Designation 199-N75 Well Depth 87.48' BTOC

Screened Interval 67.39' - 87.48' BTOC Date Well Development is Performed 7/7/92

BAILING

Water Level Prior to Bailing _____ Time of Measurement _____

Volume of Bailer _____ Number of Bails Removed _____ Gallons _____

Summary Description of Water Removed _____

Water Level After Bailing _____ Time of Measurement _____

SURGE BLOCK

Type of Surge Block _____ Dimension of Surge Block _____

TD BEFORE	STROKE LENGTH	STROKE FREQUENCY	SURGE INTERVAL	SURGE TIME	TD AFTER	TD DIFFERENCE

AIRLIFT

Depth of Eductor Pipe _____ Airlift Start Time _____

Flow Rate _____ Accumulated Flow _____ Airlift Stop Time _____

Turbidity _____, _____, _____, _____, _____, _____, _____, _____

_____, _____, _____, _____, _____, _____, _____, _____

MECHANICAL PUMPING

Pumping Technique Constant Discharge Pump Depth 86.27' BTOC Pump Start Time 0919

Flow Rate 13.19 gpm Accumulated Flow 1,438 gallons Pump Stop Time 1108

Turbidity(NTU) 11, 19, 2.1, ——, ——, ——, ——, ——

——, ——, ——, ——, ——, ——, ——, ——

Comments Discharged water collected in a regulated Purge tank due to the potential of RAD contamination. BTOC - below top of casing

Signature of Recorder R. S. Edrington Robert S. Edrington Date 7/20/92

Sign and Print Name

9313090.0376

Well Development Information Checklist

Well No. 199-N75 Date: 7/7/92

WELL INFORMATION

A. Outer Casing Diameter 6"

B. Inner Casing Diameter 4"

C. Difference in stick-up 2.07'

D. Stick-up of outer casing 3.18'

E. Thickness of well pad 0.5'

F. Depth to Water (BTOC) 72.10'

G. Total depth of Hole (BTOC) 87.48'

H. Screened Interval (BTOC) 67.39'-87.48'

I. Screen length 20.09'

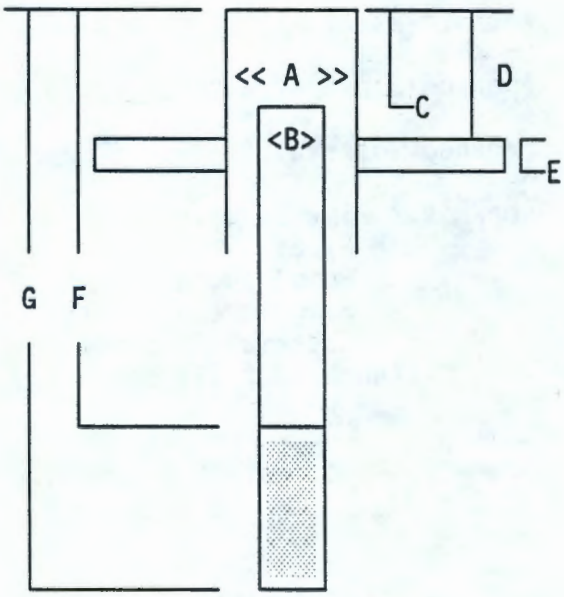

9313090.0327

DEVELOPMENT INFORMATION

J. Depth of Development pump intake. 86.27'BTOC

K. Depth (below water) of Transducer during drawdown/recovery. 13.31'

L. Depth (below water) of Transducer during slug test. 13.88'

EQUIPMENT INFORMATION

	Serial #	Calibration date
Hermit	1KB-246	N/A
E-Tape	ET-4	7/8/92
Transducer	1920	2/20/93

Slugging Rod dimensions 6' x 2"(0.13 ft^3)

Comments: Development performed on 7/7/92, pumped started 0919 at 13.19 gpm, shut off 1108 after final turbidity of 2.1 reached and 1,438 gallons were pumped. The Slug test was performed on 7/13/92, Injection was at 1013 and withdrawal 1132.

BTOC = Below Top Of Casing. BLS = Below Land Surface

SAMPLING PUMP INSTALLATION FORM

for Information only

Project: W-017 Well Number: 199-N75

Pump Type: Hydrostar Pump Model: 8001

Date Installed: 7/13/92 Installed By: B. Strode

Depth to Water: 72.26 Ft BTOC* Depth to Bottom: 87.48 Ft BTOC

Reported Depth of water: 72.10 (7/7/92) BTOC

Screened Interval: 67.39 - 87.48 Ft BTOC

Pump/Riser Pipe Description:

Pipe: 3/4" Stainless steel
Pump Length: 4.32'
Pump Screen Length: 1.91'
Material Cleaning: Manufacturer
Distance pump off bottom: 3.35'

Comments: Pump tested, produced 6.37 gpm at 65 strokes per min.

9313090.0378

PUMP INSTALLATION SKETCH

Total Material Length: 84.13 Ft Depth to Pump intake: 82.22 Ft BTOC

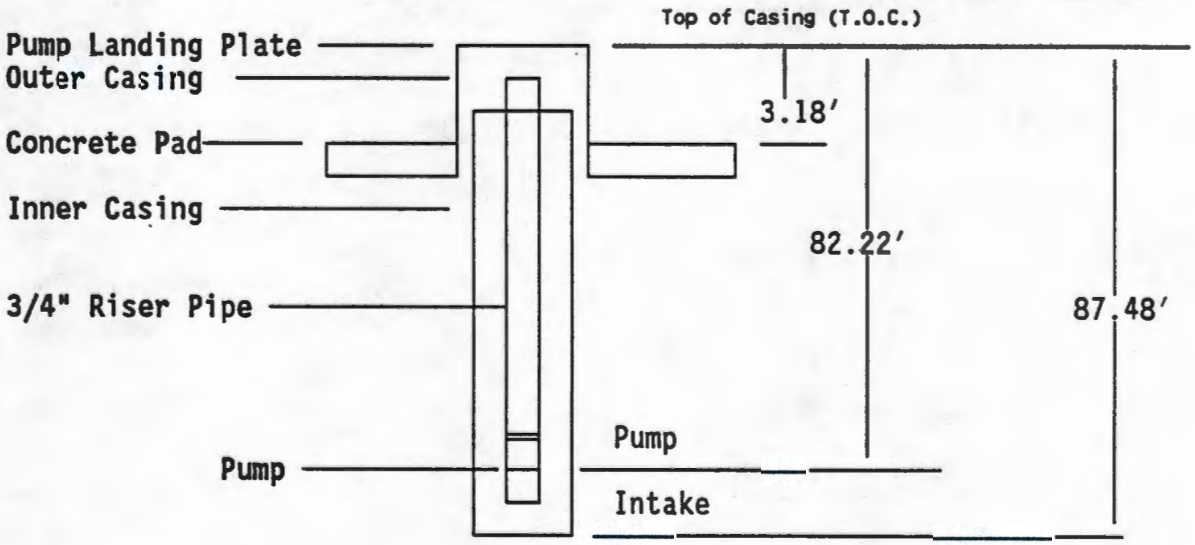

Completed By: RS Edrington Date: 7/16/92

* BTOC - Below Top Of Casing

~~7.3 of 7~~

DRAWDOWN/RECOVERY

Well ation 199-N-75 Date 7/7/92

Well Depth 87.48' Screened Interval 67.39' - 87.48'

Pumping Method Mechanical 1.5 Hp Grundfos Constant discharge

Equipment Used to Measure Water Level E-Tape/Transducer S.N. ET-4/1920 Calibation Due 7/8/92/2/20/93

Equipment Used to Measure Flow N/A S.N. N/A Calibation Due N/A

Measuring Point Top Of Casing T.O.C. Pump Start Time 0919 Pump Stop Time 1108

Time		Water Level		Discharge
Date	Time	Reading Unit:	Water Level Unit:	Reading Unit: 13.19 gpm
				Bucket Method
				Drawdown Data lost in Data collection.
		See Attached		
			See Attached	- data in Appendix D.

Signature of Recorder Robert S. Edrington Date 7/20/92
Sign and Print Name

A-6000-402 (03/90)

9313090.0879

EQUIPMENT CONFIGURATION AND WELL HEAD DIAGRAM

Well Designation 199-N76 Depth 84.39' BTOC

Equipment Configuration

Item	Description
1	HERMIT DATA LOG. SN-1RB-246
2	TRANSDUCER SN-350976
3	PUMP (F89-30-1315)
4	SAMPLING PORTS
5	SHUT OFF VALVES

Diagram

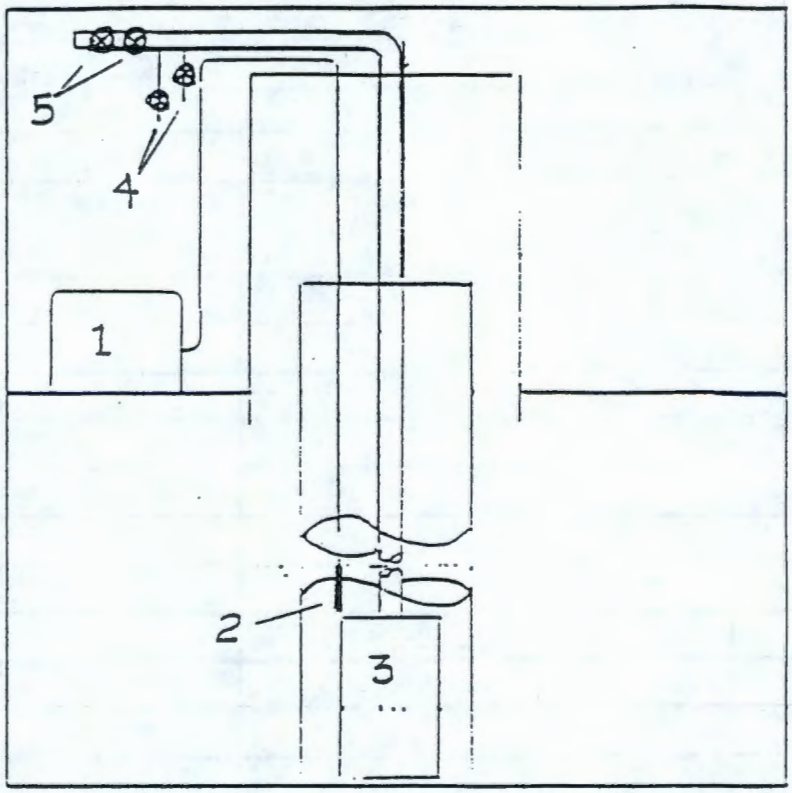

Well Head

Comments

B TOC - below top of casing.

Diagram

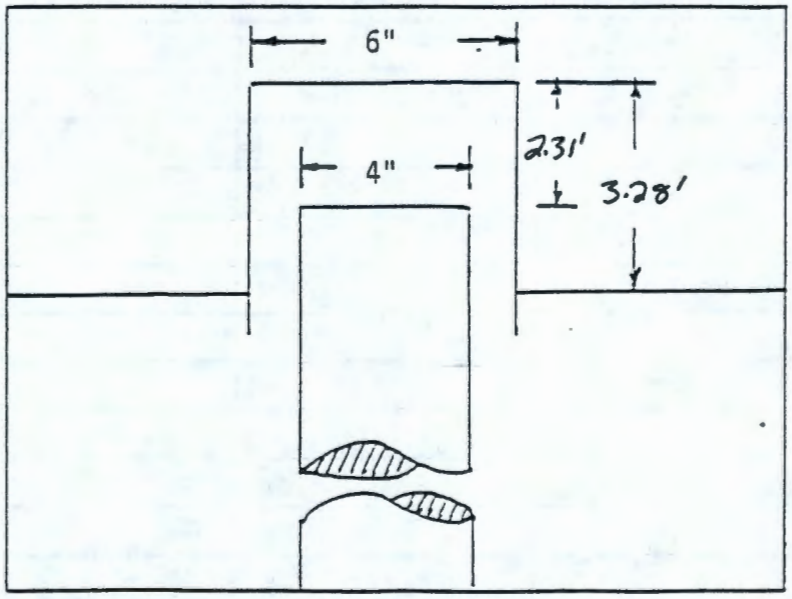

Signature of Recorder Robert S. Edrington Date 7/20/92

9313090.0380

WELL DEVELOPMENT FORM

Well Designation 199-N76 Well Depth 84.39' BTOC

Screened Interval 64.30' - 84.39' Date Well Development is Performed 7/2/92

BAILING

Water Level Prior to Bailing _____ Time of Measurement _____

Volume of Bailer _____ Number of Bails Removed _____ Gallons _____

Summary Description of Water Removed _____

Water Level After Bailing _____ Time of Measurement _____

SURGE BLOCK

Type of Surge Block _____ Dimension of Surge Block _____

TD BEFORE	STROKE LENGTH	STROKE FREQUENCY	SURGE INTERVAL	SURGE TIME	TD AFTER	TD DIFFERENCE

AIRLIFT

Depth of Eductor Pipe _____ Airlift Start Time _____

Flow Rate _____ Accumulated Flow _____ Airlift Stop Time _____

Turbidity _____, _____, _____, _____, _____, _____, _____, _____

_____, _____, _____, _____, _____, _____, _____, _____

MECHANICAL PUMPING

Pumping Technique Constant Discharge Pump Depth 83.18' Pump Start Time 1009

Flow Rate 15.54 gpm Accumulated Flow 1,958 gallons Pump Stop Time 1215

Turbidity (NTU) 39, 11, 7.7, 8.5, 6.2, 4.2, ——, ——

——, ——, ——, ——, ——, ——, ——, ——

Comments _____

Signature of Recorder R. S. Edrington Date 7/20/92

Sign and Print Name

C-7

9313090.0391

Well Development Information Checklist

Well No. 199-N76 Date: 6/29/92

WELL INFORMATION

A. Outer Casing Diameter 6"

B. Inner Casing Diameter 4"

C. Difference in stick-up 2.31'

D. Stick-up of outer casing 3.28'

E. Thickness of well pad 0.5'

F. Depth to Water (BTOC) 65.63'

G. Total depth of Hole (BTOC) 84.39'

H. Screened Interval (BTOC) 64.30'-84.39'

I. Screen length 20.09'

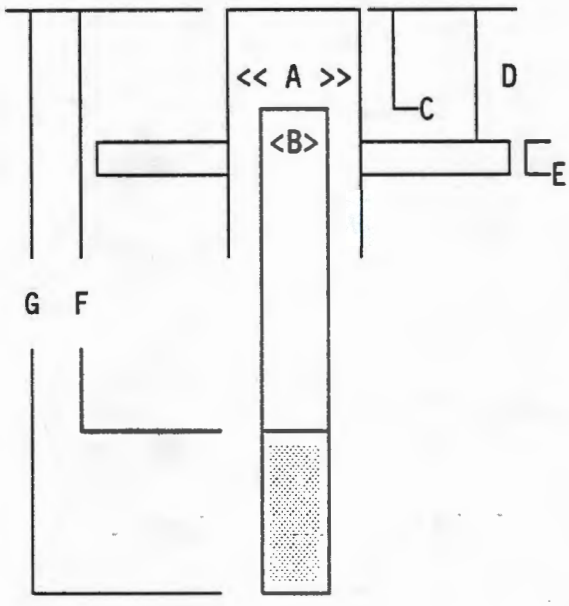

9313090.0382

DEVELOPMENT INFORMATION

J. Depth of Development pump intake. 83.18'BTOC

K. Depth (below water) of Transducer during drawdown/recovery. 13.68'

L. Depth (below water) of Transducer during slug test. 14.09'

EQUIPMENT INFORMATION

	Serial #	Calibration date
Hermit	1KB-246	N/A
E-Tape	ET-4	7/8/92|1/8/93* (E-tape re-standardized on 7/8)
Transducer	350976	2/21/93

Slugging Rod dimensions 2.91' x 2"(0.06 ft^3) Injection
6' x 2"(0.13 ft^3) Withdrawal

Comments: Development performed on 7/2/92, pumped started 1009 at 15.54 gpm, shut off 1215 after final turbidity of 4.2 reached and 1,958 gallons were pumped. The Slug test was performed on 7/9/92, Injection was at 1209 and withdrawal 1321. Due to a miscalculation, the slug was partial in the water before the slug injection, this changed the effective volume of the slug for the injection test to 0.06 ft^3. The slug was pulled out far enough to bring the slug completely out of the water on withdrawal.

BTOC = Below Top Of Casing. BLS = Below Land Surface

1 of 1

SAMPLING PUMP INSTALLATION FORM

Project: W-017 Well Number: 199-N76

Pump Type: Hydrostar Pump Model: 8001

Date Installed: 7/9/92 Installed By: B. Strode

Depth to Water: 67.60 Ft BTOC* Depth to Bottom: 84.39 Ft BTOC

Reported Depth of water: 67.63' (7/2/92) BTOC

Screened Interval: 64.30' - 84.39' Ft BTOC

Pump/Riser Pipe Description:

Pipe: 3/4" Stainless steel
Pump Length: 4.32'
Pump Screen Length: 1.92'
Material Cleaning: Manufacturer
Distance pump off bottom: 1.87'

Comments: Pump tested, produced 5.74 gpm at 58.6 strokes per min.

9313090.0383

PUMP INSTALLATION SKETCH

Total Material Length: 82.52 Ft Depth to Pump intake: 80.60 Ft BTOC

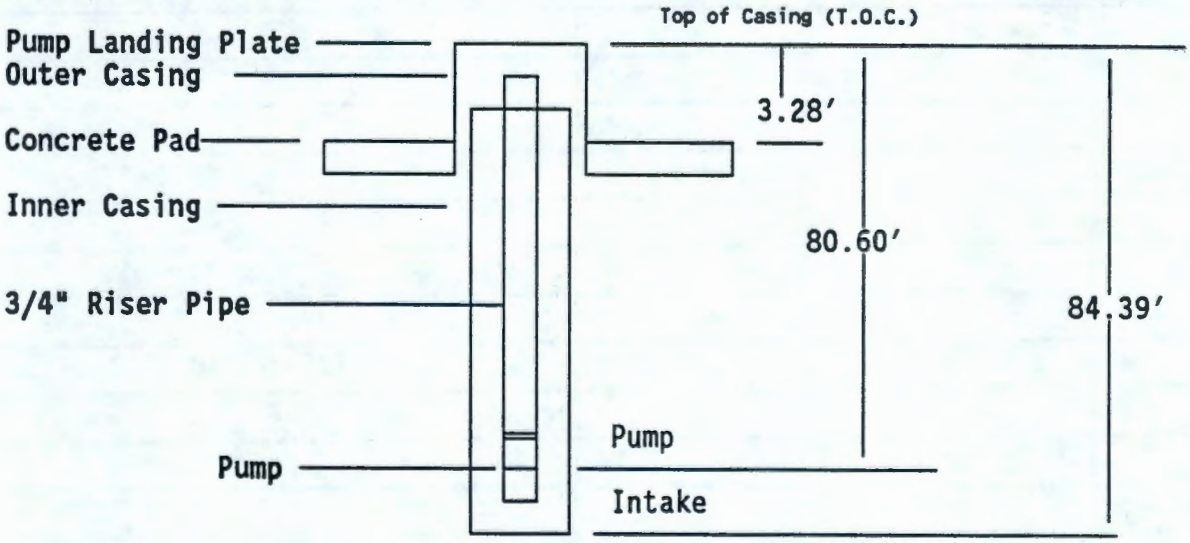

Completed By: RS Edrington Date: 7/16/92

* BTOC - Below Top Of Casing

DRAWDOWN/RECOVERY

Page 1 of ____

Well Designation 199-N76 Date 7/2/92

Well Depth 84.39' Screened Interval 64.30 - 84.39

Pumping Method Mechanical 1.5 Hp Grundfos Constant Discharge

Equipment Used to Measure Water Level E-Tape/Transducer S.N. ET-4/350976 Calibation Due 7/8/92/2/21/93

Equipment Used to Measure Flow N/A S.N. N/A Calibation Due N/A

Measuring Point Top Of Casing T.O.C. (6") Pump Start Time 1009 Pump Stop Time 1215

Time		Water Level		Discharge
Date	Time	Reading Unit:	Water Level Unit:	Reading Unit: 15.54 gpm Bucket Method
		See Attached		
			See Attached	– Data in Appendix D

Signature of Recorder Robert S. Edrington Date 7/20/92

Sign and Print Name

C-10

A-6000-402 (03/90)

9318090.0384

VALIDATED
KDR 1/11/93
SIGNATURE/DATE

EQUIPMENT CONFIGURATION AND WELL HEAD DIAGRAM

Page / of //

WELL DESIGNATION 199-N-77 DEPTH 98.9' Btoc 6"

Equipment Configuration

Item	Description
#1	1.5 hp. Grundfos submersible
#2	In-Situ datalogger 2K193
#3	In-Situ Inc s/n 1989 (cal. 7-9-93)
#4	97.60' Btoc 6"
#5	98.9-88.66' Btoc 6"
#6	Solinst s/n: ET-5 (cal. 1-13-93)
#7	
#8	
#9	
#10	

Diagram

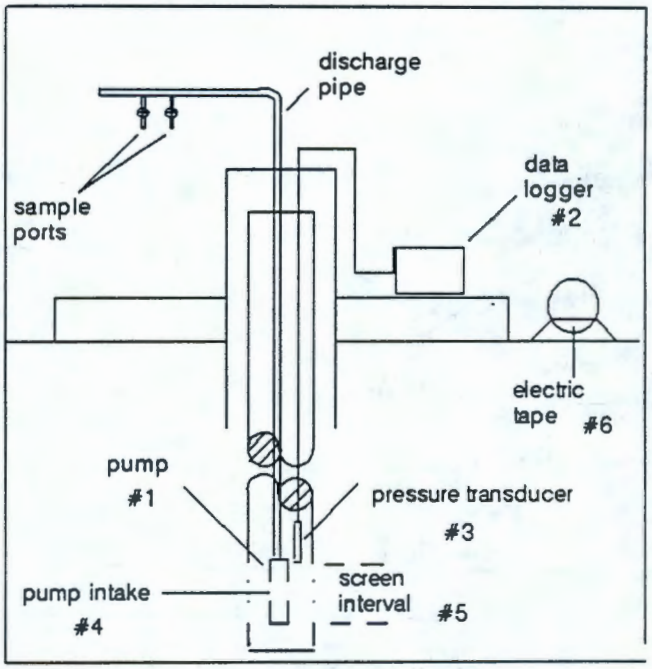

Well Head

Comments

N/A

Diagram

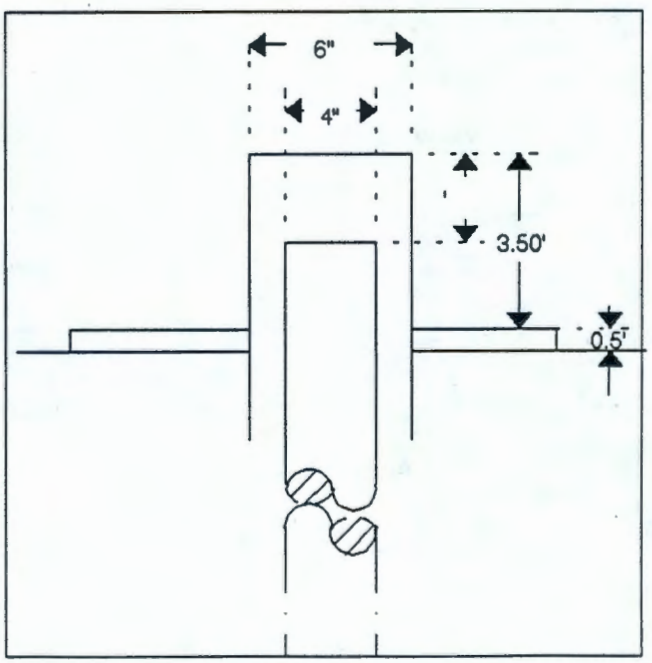

Signature of Recorder James A. Coates James A. Coates Date 12-15-92

A-6000-417 (08/89)

9313090.0385

WELL DEVELOPMENT FORM

page 2 of 4

Well Designation: 199-N-77 Well Depth: 98.9' BTOC

Screened Interval: 98.90-88.66' BTOC Date Well Devel. Performed: 11-18-92

BAILING

Water Level Prior to Bailing: _____ Time of Measurement: _____

Volume of Bailer: _____ Number of Bails Removed: _____ Gallons: _____

Summary Discription of Water Removed: _____

Water Level After Bailing: _____ Time of Measurement: _____

SURGE BLOCK: N.A.

Type of Surge Block: _____ Dimensions of Surge Block: _____

TD Before	Stroke Length	Stroke Frequency	Surge Interval	Surge Time	TD After	TD Difference

AIIRLIFT: N.A.

Depyh to Eductor Pipe: _____ Airlift Start Time: _____

Flow Rate: _____ Accumulated Flow: _____ Airlift Stop Time: _____

Turbidity (NTU): _____

MECHANICAL PUMPING:

Pumping Technique: Constant Discharge Pump Depth: 97.6'BTOC Pump Start Time: 0845

Flow Rate: 14.2gpm Accumulated Flow: 1145gals Pump Stop Time: 1005

Turbidity (NTU): 17, 9.2, 5.5, 4.0

COMMENTS: N.A.

Recorded by: James A. Coates James A. Coates Date: 12-16-92

Sign and Print Name

A-6000-393 (03/90)

9313090.0386

FOR INFORMATION ONLY

SAMPLE PUMP INSTALLATION FORM and WELL DEVELOPMENT CHECKLIST

WELL DESIGNATION 199-N-77 DEPTH 98.90'BTOC

PUMP INSTALLATION

Project: WO17H Date: 11-18-92

Pump Type: Hydrostar

Pump Model No.: 8001

Installed By: S.MacKinnon(JDC)

Depth to Water: 71.06'Btoc

Reported Depth to Water:

Screened Interval: 98.9-88.66'

Depth to Bottom:

PUMP/RISER DISCRIPTION:

Pipe: 3/4"S.S.

Pump Length: 4.3'

Pump Screen Length: 2.0'

Total Material Length: 96.3'

Distance Pump Off Bottom: 2.6'

Pump Intake @: 94.3'

Material Cleaning: Manufacturer

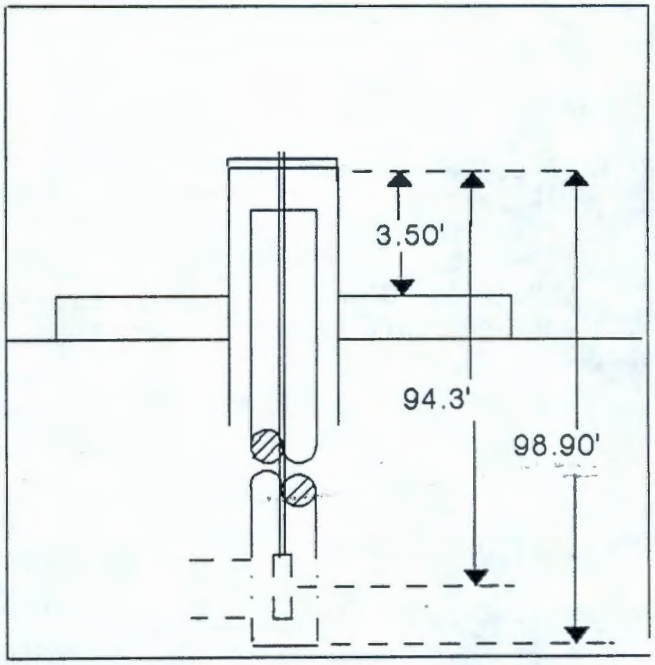

PUMP TEST: 5 GALS/56 Strokes (satisfactory)

COMMENTS:

WELL DEVELOPMENT INFORMATION

Pump Intake @: 97.6'

Transducer @: 16.160BWL

Date: 11-18-92

Flow Rate (Q): 11.45gpm

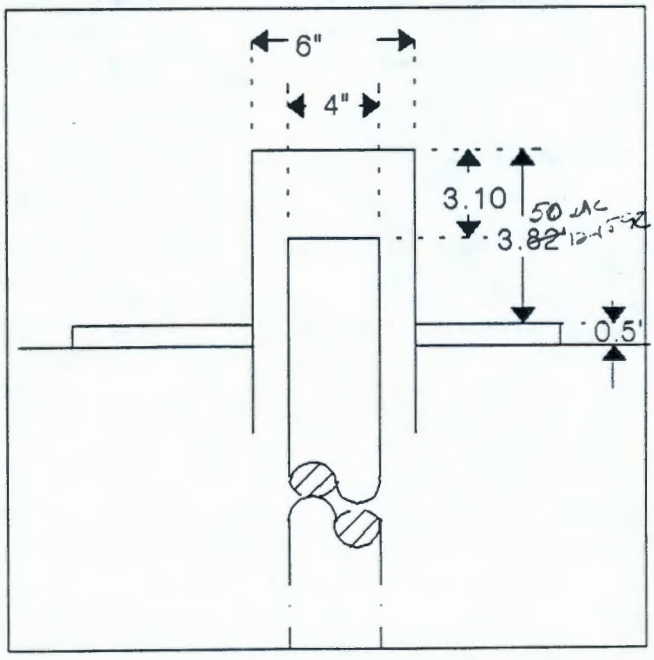

AQUIFER TEST INFORMATION

Slugging Rod Dim: 6'x 2"=.13 cf

Transducer @: 16.160BWL

Date: 11-18-92

EQUIPMENT INFORMATION:

Data logger: 2K193

E.Tape: ET-5 (1-13-93)

Transducer: 1989 (7-9-93)

Completed By: James A. Coates James A. Coates Date 12-15-92

9313090.0387

SAMPLING PUMP INSTALLATION FORM

Project: W017

Well Number: 199-N-77

Pump Type: Hydrostar

Pump Model: 8001

Date Installed: 11/18/92

Installed By: JENSEN DRILLING

Depth to Water: 71.06' Ft BTOC*

Depth to Bottom: 98.9 Ft BTOC

Reported Depth of water: NA

Screened Interval: 98.9 - 88.66 Ft BTOC

Pump/Riser Pipe Description:

Pipe: 3/4" Stainless steel

Pump Length: 4.3'

Pump Screen Length: 2.0

Material Cleaning: MANUFACTURER

Distance pump off bottom: NA

Comments:

FOR INFO ONLY

PUMP INSTALLATION SKETCH

Total Material Length: 96.3 Ft

Depth to Pump intake: 94.3' Ft BTOC

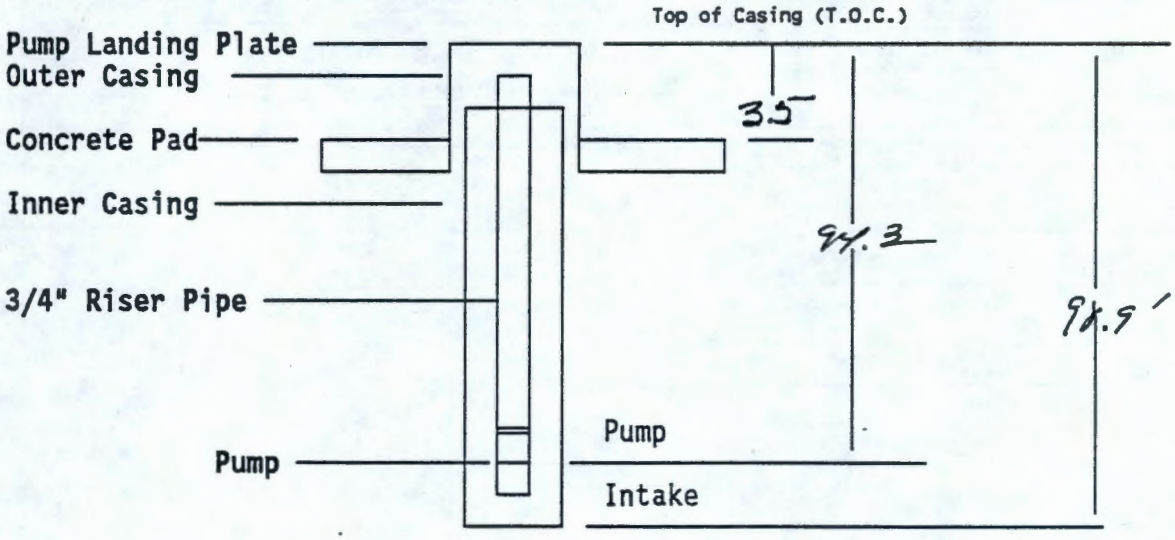

Completed By: L.A. Coates

Date: 11/18/92

Reviewed By: L.C. Rafuse

Date: 11/18/92

* BTOC - Below Top Of Casing

9313090.0388

DRAWDOWN/RECOVERY

page ~~3~~ 2 ~~of 11~~

Well Designation: 199-N-77 Date: 11-18-92

Well Depth: 98.9' BTOC Screened Interval: 98.90'-88.66'BTOC

Pumping Method: Constant Discharge

Equipment Used to Measure Water Level: E.Tape/Transducer S.N. ET-5/1989 Calibration Due: 1-13-93 /7-9-93

Equipment Used to Measure Flow: N.A. S.N.: N.A. Calibration Due: N.A.

Measuring Point: Top of Casing (6") Pump Start Time: 0845 Pump Stop Time: 1005

Time		Water Level		Discharge
Date	Time	Reading Units:	Water Level Units:	Reading Units:
				Bucket Method: 5gal./21.0sec.
				= 13.9gal/min.
				Total Purge Water=1145gal.
	See Attached Data			
			See Attached Data	Data in Appendix D

Recorded by: James A. Coates James A. Coates Date: 12-16-92
Sign and Print Name

BD-6000-402(03/90)

9313090.0389

THIS PAGE INTENTIONALLY
LEFT BLANK

APPENDIX D

AQUIFER TESTS

9313090.0390

CONTENTS

Aquifer Tests in Wells N-75, N-76, and N-77 . . . . . D-1
Well 199-N-75 . . . . . D-8
Well 199-N-76 . . . . . D-27
Well 199-N-77 . . . . . D-51

9313090.0391

APPENDIX D:
Aquifer Tests in Wells N-75, N-76, and N-77

This appendix includes descriptions and interpretations of aquifer tests conducted in wells N-75, N-76, and N-77 in 1992. Data and interpretations are compiled by well. For each aquifer test there is an "Aquifer Test Summary" form followed by data plots and raw data.

D.1 SUMMARY OF AQUIFER TEST RESULTS

Table D-1 presents results of aquifer tests in wells N-75, N-76, and N-77. Estimates of hydraulic conductivity range from 35 to 73 ft/d. Table D-2 lists geologic and well construction information for each well. Most of the estimates were derived from slug tests. Development data could only be analyzed for well N-76. None of the recovery data could be analyzed.

Well N-77 is located adjacent to well N-72 and near well N-73. Aquifer properties for the latter two wells were estimated by Hartman (1992). Early time data from slug withdrawal tests in wells N-72 and N-73 yielded estimates of hydraulic conductivity from 65 to 77 ft/d. Later-time estimates were lower (5.9 to 21 ft/d). These changes in hydraulic conductivity estimates with time (and presumably with distance from the well) may simply show the influence of the sand packs, or they may indicate aquifer heterogeneities. Slug tests in well N-77 should not have been influenced by the sand pack, since the entire screened interval was below the water table. The semilog plots of slug test data for well N-77 are curved and difficult to analyze. The data may indicate a decrease in hydraulic conductivity with distance from the well.

Other pumping tests have been conducted in the 100-N Area, as summarized by Hartman (1991). Those pumping tests had higher pumping rates than the recent tests, observation wells were employed where possible, and the wells were pumped longer. Resulting estimates of hydraulic conductivity were 10 to 100 times greater than those estimated in the recent slug tests and in the tests analyzed by Hartman (1992), which included slug and pumping tests.

Gilmore et al. (1992) re-analyzed data from pumping tests previously conducted near but outside the 100-N Area. Estimates of hydraulic conductivity were 48 to 55 ft/d.

9313090.0392

Table D-1. Summary of Aquifer Test Results for 1992.

Well		Cooper/Jacob		Bouwer/Rice	
		Discharge	Recovery	Slug injection	Slug withdrawal
N-75	T (ft^2/d)	data lost	not determined	not determined	(950)
	K (ft/d)	data lost	not determined	not determined	62
N-76	T (ft^2/d)	1200	data error	not determined	(1200)
	K (ft/d)	(64)	data error	not determined	73
N-77	T (ft^2/d)	not determined	not determined	(360)	(590)
	K (ft/d)	not determined	not determined	35	57

Values in parentheses were calculated according to the equation T=Kb, where b is the thickness of the screened interval below the water table.

Table D-2. Summary of Geologic Logs and Construction Information for Screened Interval of 1992 Wells.

Well	Screened Interval		Depth of Hanford-Ringold Contact (ft bls)	Sand pack	Screen
	Depth bls	Lithology; Formation			
N-75	84.5-64.4	Sandy gravel to gravelly sand (30-50% gravel. Ringold.	44	20-40	10 slot
N-76	81.4-61.0	Gravelly sand (35% gravel) to sand. Ringold.	29	20-40	10 slot
N-77	94.6-84.4	Sandy gravel (60% gravel). Ringold.	45	20-40	10 slot

9313090.0363

D.2 WELL DEVELOPMENT TESTS

D.2.1 Field Procedures

The wells were pumped after completion to develop the sand pack and reduce turbidity. The water level was measured with an electrical tape before development and a pressure transducer was calibrated to the measured level. In the data tables that follow the "Reference" or "SWL" (static water level) value is measured depth to water in feet. The water level was monitored with a pressure transducer while the well was pumped and after the pump was shut off, until within 95% of its static level.

D.2.2 Data Analysis

For reasons discussed below, most of the drawdown and recovery analyses were determined to be invalid. All data are presented in this appendix, but only the analysis of well N-76 drawdown data is included. This section describes the methods of analysis attempted on all the drawdown and recovery data.

Well development data were analyzed in the same manner as constant discharge tests. However, the purpose of pumping was to develop the wells, and the discharge rates may not have been actually constant. The Cooper and Jacob (1946) method was used to analyze the data.

The Cooper and Jacob method can often be used successfully for single well tests in partially penetrating wells. It is assumed that the estimated transmissivity applies to the screened interval only. Drawdown is plotted on the (linear) vertical axis and time on the (logarithmic) horizontal axis. Ideally, data should fall on a straight line. The change in drawdown over one log cycle is determined from the graph. Transmissivity is then calculated from the following equation:

$$T = \frac{2.3Q}{4\pi\Delta s}$$

where T = transmissivity, Q = pumping rate, and Δs = change in water level over one log cycle.

Recovery data were analyzed by the Cooper and Jacob method in much the same way as drawdown data. The factor $(t_p+t_r)/t_r$ (dimensionless time) was plotted on the log scale instead of time, where t_p = pumping time, and t_r = recovery time.

D.2.3 Assumptions and Limitations

The pumps were not equipped with valves to prevent the water in the riser pipe from falling back into the well when the pump was shut off. Consequently, the wells received a "slug" of water at the start of the recovery tests. The data were not analyzed.

9313090.0339

The Cooper and Jacob method is applicable only when the parameter u is very small, i.e.:

$$u=\frac{r^2S}{4Tt}\leq 0.01$$

The u assumption generally is met at early times for pumping wells.

Factors influencing drawdown include: a) changing aquifer thickness as the water table declines; b) delayed yield; and c) borehole storage effects. Measured drawdown were corrected for changing aquifer thickness with the following equation:

$$s'=s-\frac{s^2}{2b}$$

where s′ = corrected drawdown; s = measured drawdown; b = aquifer thickness (30 ft for the 100-N tests).

Weeks (1977) suggests the following equation to estimate the time at which borehole storage effects end:

$$t_c=\frac{25r^2}{T}$$

where r = casing radius. This time is noted on the data plots that follow.

The 100-N development tests were of relatively short duration. The effects of delayed yield were probably significant throughout the tests, since none was run for an extended time. Neglecting delayed yield would result in an overestimate of transmissivity.

Pumping rates were not monitored continuously during development of wells N-75, N-76, and N-77. Pumping rates may have changed significantly in at least some of the tests.

D.3 SLUG INJECTION AND SLUG WITHDRAWAL TESTS

Slug tests can often provide an estimate of aquifer properties in the immediate vicinity of a borehole. Slug injection and withdrawal were performed on the 100-N wells after completion and development.

D.3.1 Field Procedures

The water level was measured with an electrical tape before the test and a pressure transducer was calibrated to the measured level. A solid slugging rod was suddenly submerged in the water column of the well. The water level was measured with a pressure transducer until it had returned to nearly static. The slugging rod was then withdrawn from the water column, and the water level was monitored until it returned to static.

9313090.0395

D.3.2 Data Analysis

Slug test data were analyzed by the Bouwer and Rice method (as modified by Bouwer, 1989). The Bouwer and Rice method is designed for fully- or partially-penetrating wells in unconfined aquifers. Time is plotted on the (linear) horizontal axis and depth to water (or change in water level) on the (logarithmic) vertical axis. The updated method (Bouwer, 1989) also accounts for the sand pack around the screen, which effectively increases the diameter of the screened interval. Definitions are illustrated in Figure D-1.

The 100-N slug test data were plotted using commercially available software. A best-fit line was chosen visually. A computer program was used to perform Bouwer and Rice calculations. The program requires inputting the y-intercept of the line, and the water level at some time t; it uses these data to calculate the slope of the line. It also calculates an effective casing radius and other parameters required by the Bouwer and Rice method.

Input parameters to the Bouwer and Rice method include sand pack porosity and aquifer thickness. The porosity of a 20-40 mesh silica sand is approximately 40%, based on laboratory tests conducted at the Hanford Site. The thickness of the uppermost aquifer at well N-77, which is completed at the base of the aquifer, is 30 ft. The thickness at wells N-75 and N-76, which do not penetrate the entire aquifer, is also estimated to be 30 ft, based on data from nearby, deeper wells.

9313090.0396

D.3.3 Assumptions and Limitations

Slug tests stress a relatively small portion of the aquifer immediately around the borehole. Results may not be representative of the entire aquifer.

Slug withdrawal data are generally more representative of aquifer properties than are injection data when injection wets a previously unsaturated portion of the formation. This was the case in the slug tests for wells N-75 and N-76.

Measured water levels at the start of some of the slug injection tests were greater than the expected 1.5 ft. In all cases, slug injection caused oscillations in water level. These very early data were not used in analyzing the data.

Figure D-1. Definition of Terms for Bouwer and Rice Slug Test Analyses.

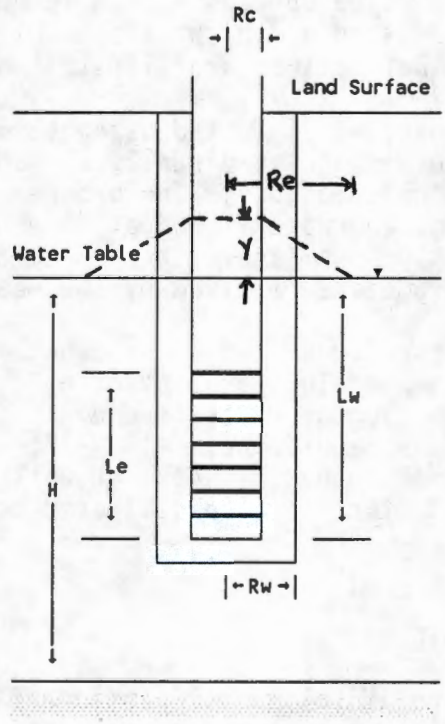

H = Saturated thickness of aquifer = 30 ft
Le = Length of screen beneath static water level
Lw = Length from SWL to bottom of hole
Rc = Radius of casing = 0.167 ft
Rw = Radius of the hole = 0.417 ft
Re = Radius of influence
y = Change in water level due to slug

9313090.0397

REFERENCES FOR APPENDIX D

Bouwer, H., 1989, "The Bouwer and Rice Slug Test -- An Update," in *Ground Water*, v. 27, no.3, pp. 304-309.

Cooper, H.H., Jr., and C.E. Jacob, 1946, "A generalized graphical method for evaluating formation constants and summarizing well-field history," in *American Geophysical Union Transactions*, v. 27, no.4, pp. 526-534.

Gilmore, T.J., D.R. Newcomer, S.K. Wurstner, and F.A. Spane, 1992, *Calculation of Groundwater Discharge to the Columbia River in the 100-N Area*, PNL-8057, Pacific Northwest Laboratory, Richland, Washington.

Hartman, M.J., 1991, *Groundwater Monitoring Plan for the 1301-N, 1324-N/NA, and 1325-N Facilities*, WHC-SD-EN-AP-038, Westinghouse Hanford Company, Richland, Washington.

Hartman, M.J., 1992 *Borehole Completion Data Package for Wells 199-N-71, N-72, N-73, and N-74*, WHC-SD-EN-DP-040, Westinghouse Hanford Company, Richland, Washington.

Weeks, E.P., 1977, "Aquifer Tests--the State of the Art in Hydrology," in *Proceedings of the Invitational Well Symposium*, LBL-7027, Lawrence Berkeley Laboratory, University of California, p. 23.

9313090.0398

AQUIFER TEST SUMMARY

WELL 199-N-75 DEVELOPMENT AND RECOVERY

Purpose of Tests: The well was pumped for development. Water levels were measured during drawdown and recovery for use in estimating aquifer transmissivity. Drawdown data were lost.

Hydrogeologic Unit Tested: The uppermost aquifer (Ringold Formation), comprising sandy gravel.

Thickness of Aquifer: 30 ft (estimated; borehole did not fully penetrate aquifer)

Depth of Screened or Open Interval Exposed to Aquifer During Test: Screened 87.5 to 67.4 ft below top of casing; Water level at 72.10 ft below top of casing; tested thickness = 15.4 ft

Diameter of Well Casing: 4 in (0.333 ft)

Diameter of Well Screen: 4 in (0.333 ft)

Diameter of Screen plus Sand Pack: 10 in (0.833 ft)

Porosity of Sand Pack: 0.4

Observation Well(s) Used: None Distance from Pumping Well: N/A

Depth of Screened Interval of Observation Well: N/A

Date of Tests: 7 July 1993

Pumping Rate: average discharge = 13.19 gal/min (2539 ft^3/d)

Duration of Test: Discharge: 109 min; Recovery monitored for 66 min
Note: Data from discharge portion of test lost.

Water-Level Measurement Methods: pressure transducer with data logger

Maximum Change in Water Level: 4.1 ft

RESULTS: Drawdown data were lost. Recovery data were affected by the slug of water from the riser pipe and were not analyzed (see Section D.2.3).

9313090.0399

WELL N-75 BASELINE BEFORE DEVELOPMENT

Unit# 00001 Test# 3

INPUT 1: Level (F) TOC
Baseline
SWL 72.10
Scale factor 50.18
Step# 0 07/07 08:59

Time:min	Time:hrs	D-T-W:Ft	d(WL):Ft
0.00	0.00	72.59	-0.49
1.00	0.02	72.59	-0.49
2.00	0.03	72.57	-0.47
3.00	0.05	72.57	-0.47
4.00	0.07	72.57	-0.47
5.00	0.08	72.57	-0.47
6.00	0.10	72.57	-0.47
7.00	0.12	72.57	-0.47
8.00	0.13	72.57	-0.47
9.00	0.15	72.57	-0.47
10.00	0.17	72.57	-0.47
11.00	0.18	72.55	-0.45
12.00	0.20	72.55	-0.45
13.00	0.22	72.55	-0.45
14.00	0.23	72.55	-0.45
15.00	0.25	72.55	-0.45
16.00	0.27	72.55	-0.45
17.00	0.28	72.55	-0.45
18.00	0.30	72.55	-0.45

WELL N-75 DRAWDOWN DURING DEVELOPMENT: DATA LOST

9313090.0400

WELL N-75 RECOVERY AFTER DEVELOPMENT

Q = 13.19 gal/min

Unit# 00001 Test# 4
INPUT 1: Level (F) TOC
Recovery
SWL 72.10' BTOC
Scale factor 50.18 s'=s-s^2/2b tp=113 min
Step# 0 07/07 11:08 b=30 ft

Time:min	Time:hrs	D-T-W:Ft	s	s'	(tp+tr)/tr
0.000	0.00000	75.93	3.83	3.5855	---
0.003	0.00006	76.14	4.04	3.7680	34243.42
0.007	0.00011	76.23	4.13	3.8457	17122.21
0.010	0.00017	76.18	4.08	3.8026	11415.14
0.013	0.00022	76.09	3.99	3.7247	8497.24
0.017	0.00028	76.01	3.91	3.6552	6808.23
0.020	0.00033	75.93	3.83	3.5855	5651.00
0.023	0.00039	75.85	3.75	3.5156	4850.79
0.027	0.00044	75.77	3.67	3.4455	4249.12
0.030	0.00050	75.69	3.59	3.3752	3767.67
0.033	0.00056	75.61	3.51	3.3047	3394.39
0.050	0.00083	75.28	3.18	3.0115	2261.00
0.067	0.00111	74.98	2.88	2.7418	1697.70
0.083	0.00139	74.73	2.63	2.5147	1357.54
0.100	0.00167	74.52	2.42	2.3224	1131.00
0.117	0.00194	74.36	2.26	2.1749	970.13
0.133	0.00222	74.22	2.12	2.0451	848.71
0.150	0.00250	74.09	1.99	1.9240	754.33
0.167	0.00278	73.98	1.88	1.8211	679.27
0.183	0.00306	73.89	1.79	1.7366	617.48
0.200	0.00333	73.81	1.71	1.6613	566.00
0.217	0.00361	73.73	1.63	1.5857	522.70
0.233	0.00389	73.65	1.55	1.5100	485.35
0.250	0.00417	73.57	1.47	1.4340	453.00
0.267	0.00444	73.51	1.41	1.3769	424.86
0.283	0.00472	73.44	1.34	1.3101	399.87
0.300	0.00500	73.39	1.29	1.2623	377.67
0.317	0.00528	73.33	1.23	1.2048	357.92
0.333	0.00556	73.28	1.18	1.1568	340.03
0.417	0.00695	73.08	0.98	0.9640	272.18
0.500	0.00833	72.92	0.82	0.8088	227.00
0.583	0.00972	72.78	0.68	0.6723	194.73
0.667	0.01111	72.68	0.58	0.5744	170.49
0.750	0.01250	72.59	0.49	0.4860	151.67
0.833	0.01389	72.54	0.44	0.4368	136.61
0.917	0.01528	72.51	0.41	0.4072	124.27
1.000	0.01667	72.48	0.38	0.3776	114.00
1.083	0.01805	72.46	0.36	0.3578	105.31
1.167	0.01945	72.46	0.36	0.3578	97.85
1.250	0.02083	72.46	0.36	0.3578	91.40
1.333	0.02222	72.46	0.36	0.3578	85.75
1.417	0.02361	72.46	0.36	0.3578	80.77

9313090.0401

WELL N-75 RECOVERY AFTER DEVELOPMENT

Time:min	Time:hrs	D-T-W:Ft	s	s'	(tp+tr)/tr
1.500	0.02500	72.46	0.36	0.3578	76.33
1.583	0.02639	72.46	0.36	0.3578	72.37
1.667	0.02778	72.46	0.36	0.3578	68.80
1.750	0.02917	72.46	0.36	0.3578	65.57
1.833	0.03056	72.46	0.36	0.3578	62.64
1.917	0.03195	72.46	0.36	0.3578	59.96
2.000	0.03333	72.46	0.36	0.3578	57.50
2.500	0.04167	72.44	0.34	0.3381	46.20
3.000	0.05000	72.44	0.34	0.3381	38.67
3.500	0.05833	72.43	0.33	0.3282	33.29
4.000	0.06667	72.43	0.33	0.3282	29.25
4.500	0.07500	72.43	0.33	0.3282	26.11
5.000	0.08333	72.44	0.34	0.3381	23.60
5.500	0.09167	72.44	0.34	0.3381	21.55
6.000	0.10000	72.44	0.34	0.3381	19.83
6.500	0.10833	72.44	0.34	0.3381	18.38
7.000	0.11667	72.44	0.34	0.3381	17.14
7.500	0.12500	72.44	0.34	0.3381	16.07
8.000	0.13333	72.44	0.34	0.3381	15.13
8.500	0.14167	72.44	0.34	0.3381	14.29
9.000	0.15000	72.43	0.33	0.3282	13.56
9.500	0.15833	72.41	0.31	0.3084	12.89
10.000	0.16667	72.41	0.31	0.3084	12.30
12.000	0.20000	72.43	0.33	0.3282	10.42
14.000	0.23333	72.41	0.31	0.3084	9.07
16.000	0.26667	72.4	0.3	0.2985	8.06
18.000	0.30000	72.36	0.26	0.2589	7.28
20.000	0.33333	72.36	0.26	0.2589	6.65
22.000	0.36667	72.35	0.25	0.2490	6.14
24.000	0.40000	72.35	0.25	0.2490	5.71
26.000	0.43333	72.33	0.23	0.2291	5.35
28.000	0.46667	72.33	0.23	0.2291	5.04
30.000	0.50000	72.33	0.23	0.2291	4.77
32.000	0.53333	72.32	0.22	0.2192	4.53
34.000	0.56667	72.32	0.22	0.2192	4.32
36.000	0.60000	72.32	0.22	0.2192	4.14
38.000	0.63333	72.33	0.23	0.2291	3.97
40.000	0.66667	72.35	0.25	0.2490	3.83
42.000	0.70000	72.33	0.23	0.2291	3.69
44.000	0.73333	72.33	0.23	0.2291	3.57
46.000	0.76667	72.33	0.23	0.2291	3.46
48.000	0.80000	72.32	0.22	0.2192	3.35
50.000	0.83333	72.32	0.22	0.2192	3.26
52.000	0.86667	72.32	0.22	0.2192	3.17
54.000	0.90000	72.32	0.22	0.2192	3.09
56.000	0.93333	72.32	0.22	0.2192	3.02
58.000	0.96667	72.32	0.22	0.2192	2.95
60.000	1.00000	72.32	0.22	0.2192	2.88
62.000	1.03333	72.3	0.2	0.1993	2.82
64.000	1.06667	72.3	0.2	0.1993	2.77
66.000	1.10000	72.29	0.19	0.1894	2.71

9313090.0002

AQUIFER TEST SUMMARY

WELL 199-N-75 SLUG INJECTION AND WITHDRAWAL

Purpose of Tests: to estimate aquifer transmissivity or hydraulic conductivity

Hydrogeologic Unit Tested: The uppermost aquifer (Ringold Formation), comprising sandy gravel

Thickness of Aquifer: 30 ft (estimated; borehole did not fully penetrate aquifer)

Depth of Screened or Open Interval Exposed to Aquifer During Test: Screened 87.5 to 67.4 ft below top of casing; Water level at 72.26 ft below top of casing; tested thickness = 15.24 ft

Diameter of Well Casing: 4 in (0.333 ft)

Diameter of Well Screen: 4 in (0.333 ft)

Diameter of Screen plus Sand Pack: 10 in (0.833 ft)

Porosity of Sand Pack: 0.4

Observation Well(s) Used: None Distance from Pumping Well: N/A

Depth of Screened Interval of Observation Well: N/A

Date of Tests: 13 July 92

Slugging Rod Dimension: 2-in diameter by 6-ft length (0.13 ft^3)

Duration of Test: Injection: 26 min; Withdrawal: 86 min

Water-Level Measurement Methods: pressure transducer with data logger

Maximum Change in Water Level: 4.41 ft (see remarks)

9313090.0403

RESULTS:

Test	Transmissivity (ft^2/d)*	Hydraulic Conductivity (ft/d)*
Injection	Not determined	Not determined
Withdrawal	(950)	62

* Bouwer and Rice method estimates hydraulic conductivity; Transmissivity was estimated by the equation T=Kb, where b = screened aquifer thickness.

Remarks:

The maximum change in water level after slug injection was higher than the expected 1.5 ft due to oscillations. Water levels recovered rapidly (less than 1 min) after slug injection and oscillated until water levels had virtually recovered (Figures D-2 and D-3). Slug injection data could not be analyzed.

Water levels also recovered rapidly after slug withdrawal but oscillations were less significant and the Bouwer and Rice method was applied (Figure D-4).

9313090.0104

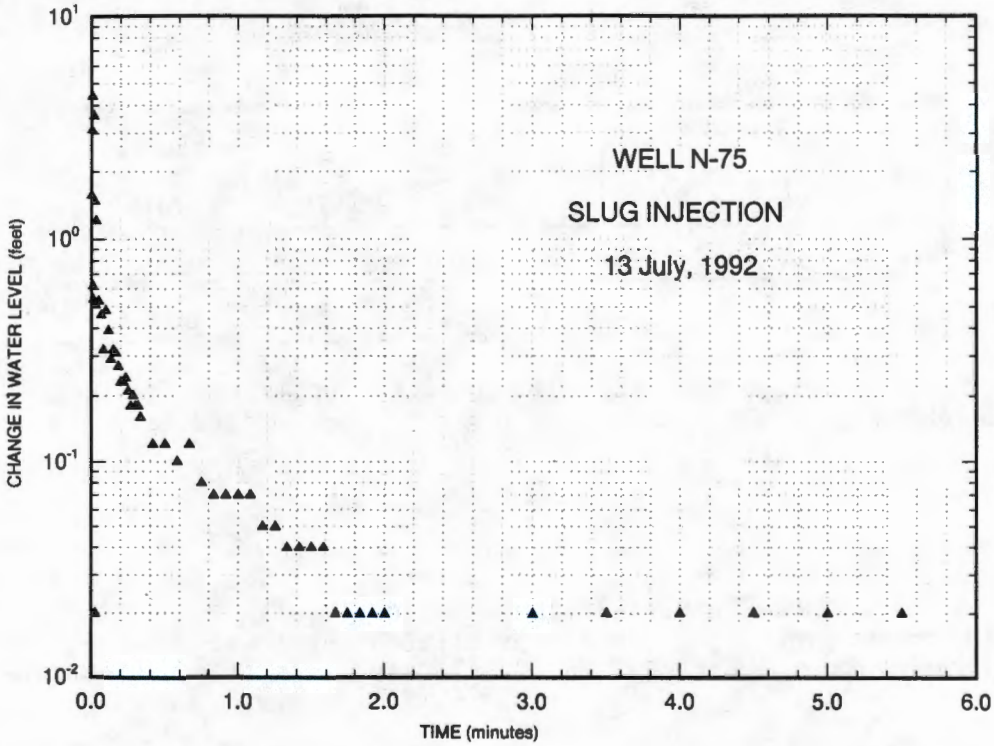

Figure D-2. Well N-75 Slug Injection.

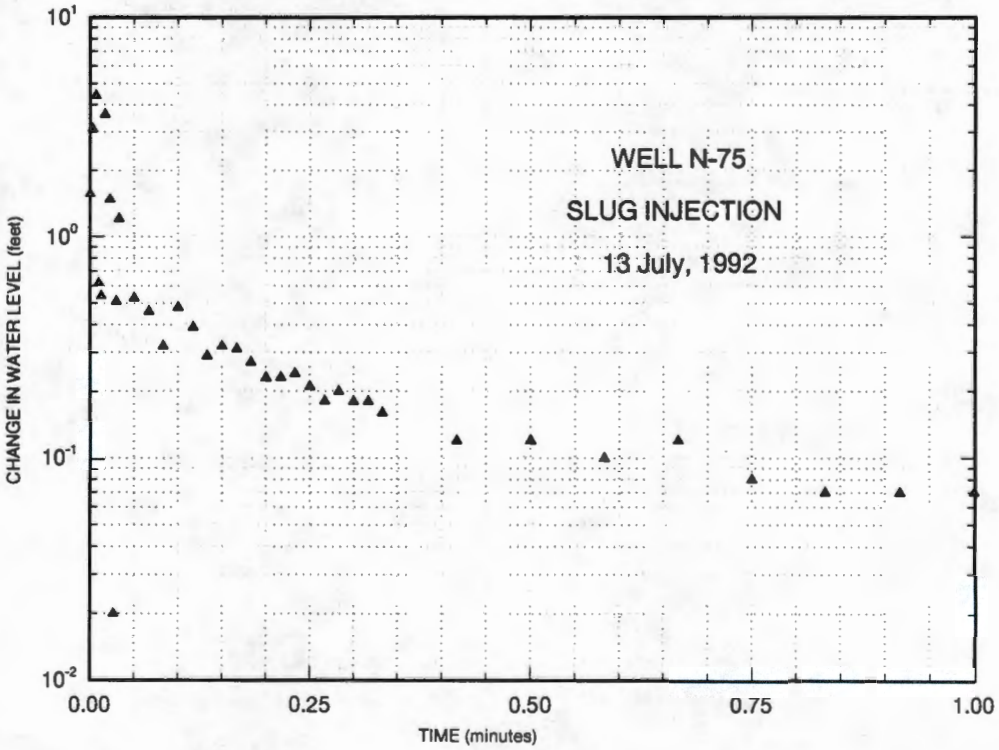

Figure D-3. Well N-75 Slug Injection (early time data).

9313090.0905

9313090.0406

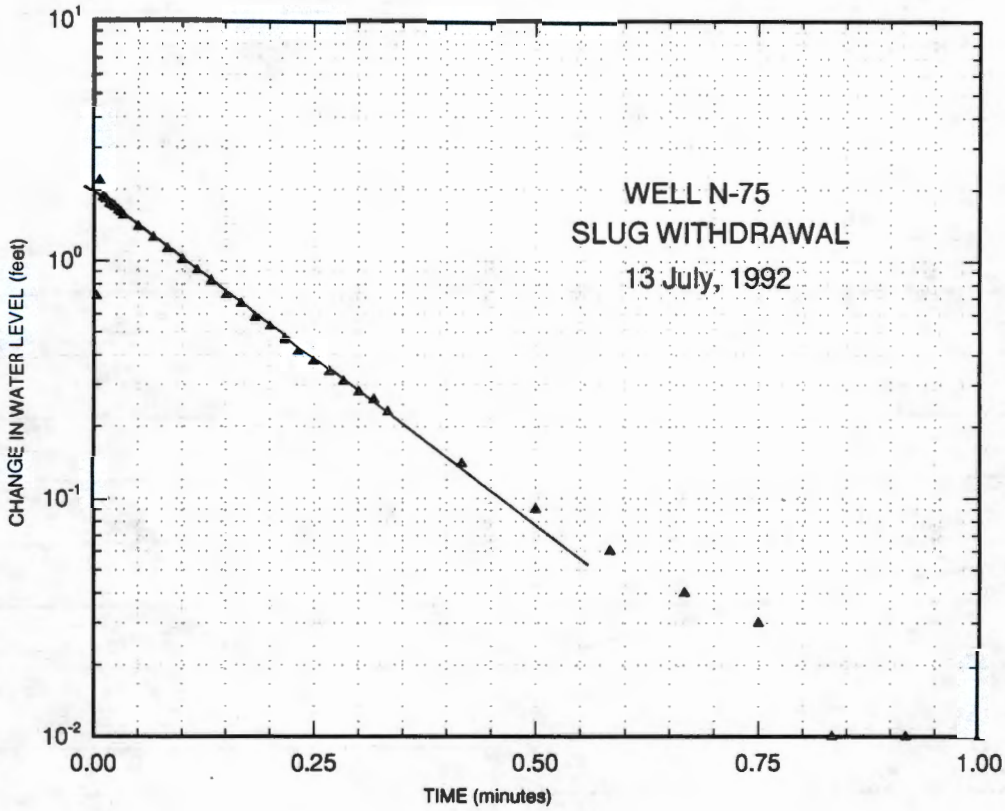

Figure D-4. Well N-75 Slug Withdrawal.

VALIDATED
KDR 12/9/92
SIGNATURE/DATE

~~P. 1 of 11~~

BOREHOLE TEST INFORMATION

Borehole 199-N75 Borehole Diameter 4 inches Hanford Coordinates N/A

Interval Tested 67.39'-87.48' Depth Interval 67.39'-87.48'

Test Type Instantaneous Slug test Borehole Depth 87.48'

Instruction Used WHC-CM-7-7 EII 10.1

EQUIPMENT

NAME	DESCRIPTION
ELECTRIC SOUNDER	SOLINST SN-ET-4
DATA LOGGER	IN SITU INC. SN-IKB-700
PRESSURE TRANSDUCER	IN SITU Inc. SN-~~18~~ RSE 1920
SLUGGING ROD	6'x 2" (0.13 ft^3)
STEEL MEASURING TAPE	GRADUATED STEEL TAPE (~~500'~~ 300' RE)

MEASUREMENT DATUM

Control Datum Top of 6" Casing (T.O.C.)

Elevation N/A

Electric Sounder T.O.C.

Steel Tape T.O.C.

Pressure Transducer T.O.C.

WELL HEAD DIAGRAM

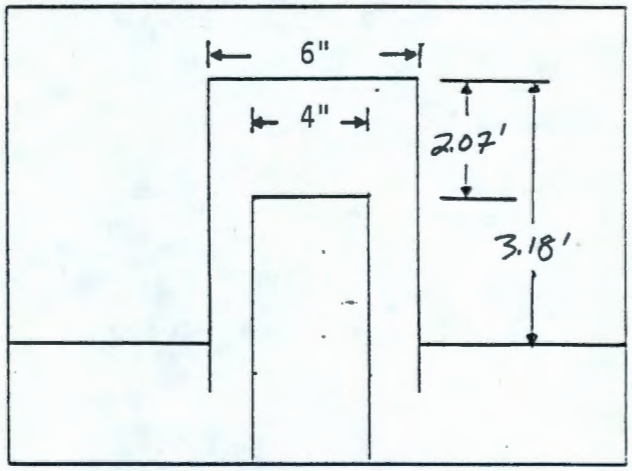

COMMENTS

Recorded by: Robert S. Edrington (Sign and Print Name) 7/20/92 (Date)

BD-6000-295 (05/89)

9313090.0407

INSTANTANEOUS SLUG TEST DATA SHEET -- INJECTION

Well 199-N75

Interval Tested 67.39' - 87.48' BTOC*

Depth to Water* (Below Top of Casing) 72.26'

Date 7/13/92

Measured by Robert S. Edrington

Slug Volume 0.13ft³ Barometer Reading (Beginning) N/A (End) N/A

Time 1013

Transducer Measurement Units Feet

Depth to Transducer (Below water) 13.88'

Initial Pressure (P_i) 72.26' BTOC*

Slug Level or Pressure (P_{max}) 67.85' BTOC*

Borehole Diameter 4"

Time Observed	Time Elapsed	Pressure Trans. Measurement	Time Observed	Time Elapsed	Pressure Trans. Measurement	Time Observed	Time Elapsed	Pressure Trans. Measurement
		SEE ATTACHED			SEE ATTACHED			

Recorded by Robert S. Edrington (Sign and Print Name) 7/20/92 (Date)

BD-6000-293 (07/90)

9413090.0636

WELL N-75 BASELINE BEFORE SLUG INJECTION

Unit# 00700 Test# 0

INPUT 1: Level (F) TOC
Baseline for Injection
SWL 72.26
Scale factor 50.18
Step# 0 07/13 09:38

Time:min	Time:hrs	D-T-W:Ft	d(WL):Ft
0.00	0.000	72.30	0.04
1.00	0.017	72.32	0.06
2.00	0.033	72.32	0.06
3.00	0.050	72.32	0.06
4.00	0.067	72.33	0.07
5.00	0.083	72.33	0.07
6.00	0.100	72.33	0.07
7.00	0.117	72.35	0.09
8.00	0.133	72.33	0.07
9.00	0.150	72.35	0.09
10.00	0.167	72.35	0.09
11.00	0.183	72.35	0.09
12.00	0.200	72.35	0.09
13.00	0.217	72.35	0.09
14.00	0.233	72.35	0.09
15.00	0.250	72.33	0.07
16.00	0.267	72.33	0.07
17.00	0.283	72.33	0.07
18.00	0.300	72.33	0.07
19.00	0.317	72.33	0.07
20.00	0.333	72.35	0.09
21.00	0.350	72.33	0.07
22.00	0.367	72.35	0.09
23.00	0.383	72.35	0.09
24.00	0.400	72.37	0.11
25.00	0.417	72.35	0.09
26.00	0.433	72.35	0.09
27.00	0.450	72.35	0.09
28.00	0.467	72.37	0.11
29.00	0.483	72.35	0.09
30.00	0.500	72.35	0.09
31.00	0.517	72.33	0.07
32.00	0.533	72.33	0.07

9313090.0409

WELL N-75 SLUG INJECTION

Unit# 00700 Test# 1

INPUT 1: Level (F) TOC
Slug Injection
SWL 72.26
Scale factor 50.18
Slug Volume 0.13 Cu ft
Step# 0 07/13 10:12

Time:min	Time:hrs	D-T-W:Ft	d(WL):Ft
0.000	0.00000	70.69	1.57
0.003	0.00006	69.15	3.11
0.007	0.00011	67.85	4.41
0.010	0.00017	71.64	0.62
0.013	0.00022	71.72	0.54
0.017	0.00028	68.66	3.60
0.020	0.00033	72.26	0.00
0.023	0.00039	70.78	1.48
0.027	0.00044	72.24	0.02
0.030	0.00050	71.75	0.51
0.033	0.00056	71.05	1.21
0.050	0.00083	71.73	0.53
0.067	0.00111	71.80	0.46
0.083	0.00139	71.94	0.32
0.100	0.00167	71.78	0.48
0.117	0.00194	71.87	0.39
0.133	0.00222	71.97	0.29
0.150	0.00250	71.94	0.32
0.167	0.00278	71.95	0.31
0.183	0.00306	71.99	0.27
0.200	0.00333	72.03	0.23
0.217	0.00361	72.03	0.23
0.233	0.00389	72.02	0.24
0.250	0.00417	72.05	0.21
0.267	0.00444	72.08	0.18
0.283	0.00472	72.06	0.20
0.300	0.00500	72.08	0.18
0.317	0.00528	72.08	0.18
0.333	0.00556	72.10	0.16
0.417	0.00695	72.14	0.12
0.500	0.00833	72.14	0.12
0.583	0.00972	72.16	0.10
0.667	0.01111	72.14	0.12
0.750	0.01250	72.18	0.08
0.833	0.01389	72.19	0.07
0.917	0.01528	72.19	0.07
1.000	0.01667	72.19	0.07
1.083	0.01805	72.19	0.07
1.167	0.01945	72.21	0.05
1.250	0.02083	72.21	0.05
1.333	0.02222	72.22	0.04

9313090.0410

WELL N-75 SLUG INJECTION

Time:min	Time:hrs	D-T-W:Ft	d(WL):Ft
1.417	0.02361	72.22	0.04
1.500	0.02500	72.22	0.04
1.583	0.02639	72.22	0.04
1.667	0.02778	72.24	0.02
1.750	0.02917	72.24	0.02
1.833	0.03056	72.24	0.02
1.917	0.03195	72.24	0.02
2.000	0.03333	72.24	0.02
2.500	0.04167	72.26	0.00
3.000	0.05000	72.24	0.02
3.500	0.05833	72.24	0.02
4.000	0.06667	72.24	0.02
4.500	0.07500	72.24	0.02
5.000	0.08333	72.24	0.02
5.500	0.09167	72.24	0.02
6.000	0.10000	72.26	0.00
6.500	0.10833	72.24	0.02
7.000	0.11667	72.26	0.00
7.500	0.12500	72.26	0.00
8.000	0.13333	72.24	0.02
8.500	0.14167	72.26	0.00
9.000	0.15000	72.26	0.00
9.500	0.15833	72.26	0.00
10.000	0.16667	72.26	0.00
12.000	0.20000	72.26	0.00
14.000	0.23333	72.26	0.00
16.000	0.26667	72.27	-0.01
18.000	0.30000	72.29	-0.03
20.000	0.33333	72.29	-0.03
22.000	0.36667	72.29	-0.03
24.000	0.40000	72.29	-0.03
26.000	0.43333	72.29	-0.03

9313090.0411

WELL N-75 BASELINE BEFORE SLUG WITHDRAWAL

Unit# 00700 Test# 2

INPUT 1: Level (F) TOC
Baseline for Withdrawal
SWL 72.26
Scale factor 50.18
Step# 0 07/13 10:40

Time:min	Time:hrs	D-T-W:Ft	d(WL):Ft
0.00	0.000	72.27	0.01
1.00	0.017	72.27	0.01
2.00	0.033	72.27	0.01
3.00	0.050	72.27	0.01
4.00	0.067	72.29	0.03
5.00	0.083	72.29	0.03
6.00	0.100	72.27	0.01
7.00	0.117	72.27	0.01
8.00	0.133	72.29	0.03
9.00	0.150	72.29	0.03
10.00	0.167	72.29	0.03
11.00	0.183	72.29	0.03
12.00	0.200	72.30	0.04
13.00	0.217	72.29	0.03
14.00	0.233	72.29	0.03
15.00	0.250	72.29	0.03
16.00	0.267	72.29	0.03
17.00	0.283	72.30	0.04
18.00	0.300	72.29	0.03
19.00	0.317	72.27	0.01
20.00	0.333	72.29	0.03
21.00	0.350	72.29	0.03
22.00	0.367	72.30	0.04
23.00	0.383	72.33	0.07
24.00	0.400	72.27	0.01
25.00	0.417	72.27	0.01
26.00	0.433	72.30	0.04
27.00	0.450	72.30	0.04
28.00	0.467	72.29	0.03
29.00	0.483	72.29	0.03
30.00	0.500	72.30	0.04
31.00	0.517	72.30	0.04
32.00	0.533	72.30	0.04
33.00	0.550	72.30	0.04
34.00	0.567	72.32	0.06
35.00	0.583	72.32	0.06
36.00	0.600	72.33	0.07
37.00	0.617	72.32	0.06
38.00	0.633	72.32	0.06
39.00	0.650	72.32	0.06
40.00	0.667	72.32	0.06

9313090.0412

WELL N-75 BASELINE BEFORE SLUG WITHDRAWAL

Time:min	Time:hrs	D-T-W:Ft	d(WL):Ft
41.00	0.683	72.32	0.06
42.00	0.700	72.30	0.04
43.00	0.717	72.30	0.04
44.00	0.733	72.30	0.04
45.00	0.750	72.29	0.03
46.00	0.767	72.29	0.03
47.00	0.783	72.29	0.03
48.00	0.800	72.29	0.03
49.00	0.817	72.29	0.03
50.00	0.833	72.29	0.03

9313090.0113

WELL N-75 SLUG WITHDRAWAL

Unit# 00700 Test# 3

INPUT 1: Level (F) TOC
Slug Withdrawal
SWL 72.26
Scale factor 50.18
Slug Volume
Step# 0 07/13 11:32

Time:min	Time:hrs	D-T-W:Ft	d(WL):Ft
0.000	0.00000	71.91	-0.35
0.003	0.00006	72.97	0.71
0.007	0.00011	74.46	2.20
0.010	0.00017	74.11	1.85
0.013	0.00022	74.08	1.82
0.017	0.00028	74.00	1.74
0.020	0.00033	73.98	1.72
0.023	0.00039	73.95	1.69
0.027	0.00044	73.89	1.63
0.030	0.00050	73.86	1.60
0.033	0.00056	73.81	1.55
0.050	0.00083	73.65	1.39
0.067	0.00111	73.51	1.25
0.083	0.00139	73.38	1.12
0.100	0.00167	73.27	1.01
0.117	0.00194	73.17	0.91
0.133	0.00222	73.08	0.82
0.150	0.00250	72.98	0.72
0.167	0.00278	72.92	0.66
0.183	0.00306	72.84	0.58
0.200	0.00333	72.79	0.53
0.217	0.00361	72.73	0.47
0.233	0.00389	72.68	0.42
0.250	0.00417	72.64	0.38
0.267	0.00444	72.60	0.34
0.283	0.00472	72.57	0.31
0.300	0.00500	72.54	0.28
0.317	0.00528	72.52	0.26
0.333	0.00556	72.49	0.23
0.417	0.00695	72.40	0.14
0.500	0.00833	72.35	0.09
0.583	0.00972	72.32	0.06
0.667	0.01111	72.30	0.04
0.750	0.01250	72.29	0.03
0.833	0.01389	72.27	0.01
0.917	0.01528	72.27	0.01
1.000	0.01667	72.27	0.01
1.083	0.01805	72.26	0.00
1.167	0.01945	72.26	0.00
1.250	0.02083	72.26	0.00
1.333	0.02222	72.26	0.00
1.417	0.02361	72.26	0.00

9313090.0414

WELL N-75 SLUG WITHDRAWAL

Time:min	Time:hrs	D-T-W:Ft	d(WL):Ft
1.500	0.02500	72.26	0.00
1.583	0.02639	72.26	0.00
1.667	0.02778	72.26	0.00
1.750	0.02917	72.26	0.00
1.833	0.03056	72.24	-0.02
1.917	0.03195	72.26	0.00
2.000	0.03333	72.26	0.00
2.500	0.04167	72.26	0.00
3.000	0.05000	72.26	0.00
3.500	0.05833	72.26	0.00
4.000	0.06667	72.26	0.00
4.500	0.07500	72.26	0.00
5.000	0.08333	72.26	0.00
5.500	0.09167	72.26	0.00
6.000	0.10000	72.26	0.00
6.500	0.10833	72.24	-0.02
7.000	0.11667	72.24	-0.02
7.500	0.12500	72.24	-0.02
8.000	0.13333	72.26	0.00
8.500	0.14167	72.26	0.00
9.000	0.15000	72.24	-0.02
9.500	0.15833	72.24	-0.02
10.000	0.16667	72.24	-0.02
12.000	0.20000	72.26	0.00
14.000	0.23333	72.26	0.00
16.000	0.26667	72.26	0.00
18.000	0.30000	72.27	0.01
20.000	0.33333	72.27	0.01
22.000	0.36667	72.27	0.01
24.000	0.40000	72.27	0.01
26.000	0.43333	72.27	0.01
28.000	0.46667	72.29	0.03
30.000	0.50000	72.29	0.03
32.000	0.53333	72.29	0.03
34.000	0.56667	72.29	0.03
36.000	0.60000	72.29	0.03
38.000	0.63333	72.29	0.03
40.000	0.66667	72.30	0.04
42.000	0.70000	72.30	0.04
44.000	0.73333	72.29	0.03
46.000	0.76667	72.30	0.04
48.000	0.80000	72.30	0.04
50.000	0.83333	72.30	0.04
52.000	0.86667	72.30	0.04
54.000	0.90000	72.29	0.03
56.000	0.93333	72.29	0.03
58.000	0.96667	72.29	0.03
60.000	1.00000	72.27	0.01
62.000	1.03333	72.29	0.03
64.000	1.06667	72.30	0.04
66.000	1.10000	72.30	0.04

9313090.0415

WELL N-75 SLUG WITHDRAWAL

Time:min	Time:hrs	D-T-W:Ft	d(WL):Ft
68.000	1.13333	72.30	0.04
70.000	1.16667	72.32	0.06
72.000	1.20000	72.30	0.04
74.000	1.23333	72.29	0.03
76.000	1.26667	72.30	0.04
78.000	1.30000	72.30	0.04
80.000	1.33333	72.30	0.04
82.000	1.36667	72.30	0.04
84.000	1.40000	72.30	0.04
86.000	1.43333	72.30	0.04

9313090.0416

WELL N-75 SLUG INJECTION DATA COULD NOT BE ANALYZED.
****

WELL N-75 SLUG WITHDRAWAL
****
THE BELOW HYDRAULIC CONDUCTIVITY VALUE WAS CALCULATED
USING THE BOUWER AND RICE SLUG TEST METHOD.
SOURCE= "THE BOUWER AND RICE SLUG TEST-AN UPDATE"
GROUND WATER, VOL 27, NO. 3, MAY-JUNE 1989.
****
****
RADIUS OF CASING USED IN CALCULATIONS HAS BEEN
CORRECTED FOR THE THICKNESS OF GRAVEL OR SAND
PACK DUE TO WATER LEVEL CHANGES IN THE SCREEN OR
OPEN INTERVAL OF WELL.
****

Rc (ft)	Rw (ft)	Le (ft)	Lw (ft)	H (ft)
0.2937	0.4170	15.2400	15.2400	30.0000

****
Le/Rw = 36.5467600
A= 2.7266800
B= 4.246920E-001
C= 2.3439030
SANDPACK POROSITY= 4.000000E-001
t (min)= 5.000000E-001
1/t= 2.0000000
Yo= (ft) 2.0000000
Yt= (ft) 8.000000E-002
1/t ln(Yo/Yt)= 6.4377520
ln[(H-Lw)/Rw]= 3.5665900
ln(Re/Rw)= 2.3711930
****
K (ft/day) = 62.2306300
****
T OF THE SATURATED SCREEN INTERVAL
(ft2/day)= 948.3947000
****

9313090.0417

AQUIFER TEST SUMMARY

WELL 199-N-76 DEVELOPMENT AND RECOVERY

Purpose of Tests: The well was pumped for development. Water levels were measured during drawdown and recovery for use in estimating aquifer transmissivity.

Hydrogeologic Unit Tested: The uppermost aquifer (Ringold Formation), comprising gravelly sand.

Thickness of Aquifer: 30 ft (estimated; borehole did not fully penetrate aquifer)

Depth of Screened or Open Interval Exposed to Aquifer During Test: Screened 84.39 to 64.30 ft below top of casing; Water level at 65.63 ft below top of casing; tested thickness = 18.76 ft

Diameter of Well Casing: 4 in (0.333 ft)

Diameter of Well Screen: 4 in (0.333 ft)

Diameter of Screen plus Sand Pack: 10 in (0.833 ft)

Porosity of Sand Pack: 0.4

Observation Well(s) Used: None Distance from Pumping Well: N/A

Depth of Screened Interval of Observation Well: N/A

Date of Tests: 2 July 92

Pumping Rate: average discharge = 15.54 gal/min (2991 ft^3/d)

Duration of Test: Discharge: 120 min; Recovery monitored for 64 min

Water-Level Measurement Methods: pressure transducer with data logger

Maximum Change in Water Level: 4.6 ft

9313090.0418

RESULTS:

Methods	Transmissivity (ft^2/d)	Hydraulic Conductivity (ft/d)*
Drawdown data	1200	(64)
Recovery data	data error	data error

* Hydraulic conductivity estimated by dividing transmissivity by the screened aquifer thickness.

Remarks:

A semilog plot of data collected during development pumping of well N-76 has at least two straight-line portions (Figure D-5). The early-time data (t < 2 min) were affected by borehole storage. The later-time data (10 to 100 min) were analyzed using the Cooper and Jacob method (Figure D-6).

An error in collecting recovery data prevented interpretation.

9313090.0419

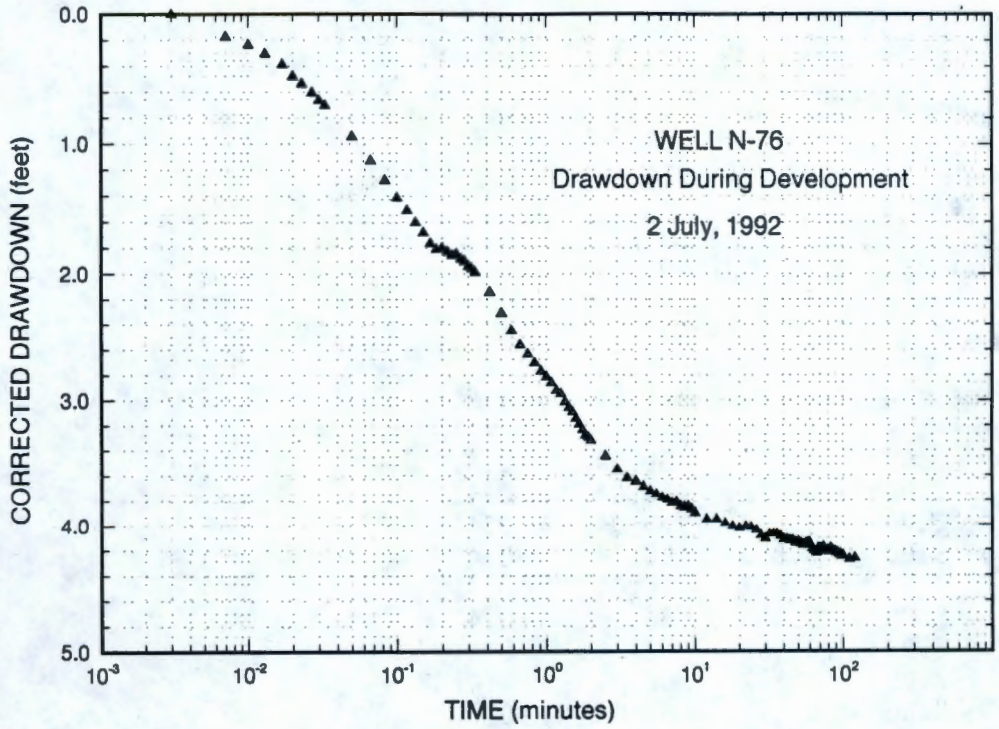

Figure D-5. Well N-76 Drawdown during Development.

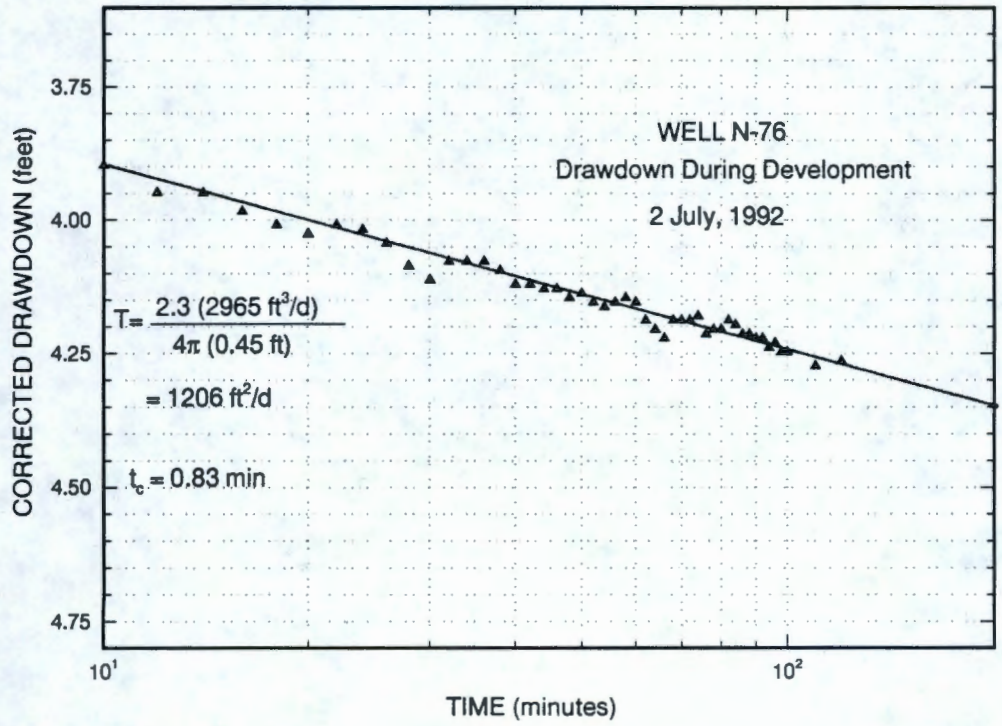

Figure D-6. Well N-76 Drawdown after Development (late time data).

9313090.0420

WELL N-76 BASELINE BEFORE DEVELOPMENT

Unit# 00001 Test# 0

INPUT 1: Level (F) TOC
Baseline
SWL 65.63
Scale factor 10.03
Offset 0.05
Step# 0 07/02 09:57

Time:min	Time:hrs	D-T-W:Ft	d(WL):Ft
0.00	0.000	66.04	0.41
1.00	0.017	66.04	0.41
2.00	0.033	66.04	0.41
3.00	0.050	66.04	0.41
4.00	0.067	66.04	0.41
5.00	0.083	66.04	0.41
6.00	0.100	66.04	0.41
7.00	0.117	66.04	0.41
8.00	0.133	66.04	0.41
9.00	0.150	66.04	0.41
10.00	0.167	66.04	0.41

9313090.0421

WELL N-76 DRAWDOWN DURING DEVELOPMENT

Q = 15.54 gal/min

Unit# 00001 Test# 1

INPUT 1: Level (F) TOC
Drawdown
SWL 65.63
Scale factor 10.03 s'=s-s^2/2b
Step# 0 07/02 10:08 b=30 ft

Time:min	Time:hrs	D-T-W:Ft	s	s'
0.000	0.00000	67.44	1.81	1.7554
0.003	0.00006	65.63	0.00	0.0000
0.007	0.00011	65.81	0.18	0.1795
0.010	0.00017	65.87	0.24	0.2390
0.013	0.00022	65.94	0.31	0.3084
0.017	0.00028	66.02	0.39	0.3875
0.020	0.00033	66.11	0.48	0.4762
0.023	0.00039	66.17	0.54	0.5351
0.027	0.00044	66.24	0.61	0.6038
0.030	0.00050	66.30	0.67	0.6625
0.033	0.00056	66.34	0.71	0.7016
0.050	0.00083	66.59	0.96	0.9446
0.067	0.00111	66.78	1.15	1.1280
0.083	0.00139	66.94	1.31	1.2814
0.100	0.00167	67.08	1.45	1.4150
0.117	0.00194	67.18	1.55	1.5100
0.133	0.00222	67.28	1.65	1.6046
0.150	0.00250	67.36	1.73	1.6801
0.167	0.00278	67.45	1.82	1.7648
0.183	0.00306	67.50	1.87	1.8117
0.200	0.00333	67.49	1.86	1.8023
0.217	0.00361	67.52	1.89	1.8305
0.233	0.00389	67.55	1.92	1.8586
0.250	0.00417	67.54	1.91	1.8492
0.267	0.00444	67.58	1.95	1.8866
0.283	0.00472	67.60	1.97	1.9053
0.300	0.00500	67.64	2.01	1.9427
0.317	0.00528	67.66	2.03	1.9613
0.333	0.00556	67.69	2.06	1.9893
0.417	0.00695	67.86	2.23	2.1471
0.500	0.00833	68.04	2.41	2.3132
0.583	0.00972	68.19	2.56	2.4508
0.667	0.01111	68.31	2.68	2.5603
0.750	0.01250	68.39	2.76	2.6330
0.833	0.01389	68.47	2.84	2.7056
0.917	0.01528	68.54	2.91	2.7689
1.000	0.01667	68.59	2.96	2.8140
1.083	0.01805	68.64	3.01	2.8590
1.167	0.01945	68.71	3.08	2.9219
1.250	0.02083	68.74	3.11	2.9488

9313090.0422

WELL N-76 DRAWDOWN DURING DEVELOPMENT

Time:min	Time:hrs	D-T-W:Ft	s	s'
1.333	0.02222	68.81	3.18	3.0115
1.417	0.02361	68.86	3.23	3.0561
1.500	0.02500	68.90	3.27	3.0918
1.583	0.02639	68.96	3.33	3.1452
1.667	0.02778	69.01	3.38	3.1896
1.750	0.02917	69.06	3.43	3.2339
1.833	0.03056	69.11	3.48	3.2782
1.917	0.03195	69.13	3.50	3.2958
2.000	0.03333	69.16	3.53	3.3223
2.500	0.04167	69.30	3.67	3.4455
3.000	0.05000	69.42	3.79	3.5506
3.500	0.05833	69.50	3.87	3.6204
4.000	0.06667	69.53	3.90	3.6465
4.500	0.07500	69.58	3.95	3.6900
5.000	0.08333	69.62	3.99	3.7247
5.500	0.09167	69.65	4.02	3.7507
6.000	0.10000	69.68	4.05	3.7766
6.500	0.10833	69.70	4.07	3.7939
7.000	0.11667	69.73	4.10	3.8198
7.500	0.12500	69.72	4.09	3.8112
8.000	0.13333	69.76	4.13	3.8457
8.500	0.14167	69.77	4.14	3.8543
9.000	0.15000	69.76	4.13	3.8457
9.500	0.15833	69.79	4.16	3.8716
10.000	0.16667	69.82	4.19	3.8974
12.000	0.20000	69.88	4.25	3.9490
14.000	0.23333	69.88	4.25	3.9490
16.000	0.26667	69.92	4.29	3.9833
18.000	0.30000	69.95	4.32	4.0090
20.000	0.33333	69.97	4.34	4.0261
22.000	0.36667	69.95	4.32	4.0090
24.000	0.40000	69.96	4.33	4.0175
26.000	0.43333	69.99	4.36	4.0432
28.000	0.46667	70.04	4.41	4.0859
30.000	0.50000	70.07	4.44	4.1114
32.000	0.53333	70.03	4.40	4.0773
34.000	0.56667	70.03	4.40	4.0773
36.000	0.60000	70.03	4.40	4.0773
38.000	0.63333	70.05	4.42	4.0944
40.000	0.66667	70.08	4.45	4.1200
42.000	0.70000	70.08	4.45	4.1200
44.000	0.73333	70.09	4.46	4.1285
46.000	0.76667	70.09	4.46	4.1285
48.000	0.80000	70.11	4.48	4.1455
50.000	0.83333	70.10	4.47	4.1370
52.000	0.86667	70.12	4.49	4.1540
54.000	0.90000	70.13	4.50	4.1625
56.000	0.93333	70.12	4.49	4.1540
58.000	0.96667	70.11	4.48	4.1455
60.000	1.00000	70.12	4.49	4.1540
62.000	1.03333	70.16	4.53	4.1880

9313090.0423

WELL N-76 DRAWDOWN DURING DEVELOPMENT

Time:min	Time:hrs	D-T-W:Ft	s	s'
64.000	1.06667	70.18	4.55	4.2050
66.000	1.10000	70.20	4.57	4.2219
68.000	1.13333	70.16	4.53	4.1880
70.000	1.16667	70.16	4.53	4.1880
72.000	1.20000	70.16	4.53	4.1880
74.000	1.23333	70.15	4.52	4.1795
76.000	1.26667	70.19	4.56	4.2134
78.000	1.30000	70.18	4.55	4.2050
80.000	1.33333	70.18	4.55	4.2050
82.000	1.36667	70.16	4.53	4.1880
84.000	1.40000	70.17	4.54	4.1965
86.000	1.43333	70.19	4.56	4.2134
88.000	1.46667	70.19	4.56	4.2134
90.000	1.50000	70.20	4.57	4.2219
92.000	1.53333	70.20	4.57	4.2219
94.000	1.56667	70.22	4.59	4.2389
96.000	1.60000	70.21	4.58	4.2304
98.000	1.63333	70.23	4.60	4.2473
100.000	1.66667	70.23	4.60	4.2473
110.000	1.83333	70.26	4.63	4.2727
120.000	2.00000	70.25	4.62	4.2643

9313090.0424

WELL N-76 RECOVERY AFTER DEVELOPMENT

Q = 15.54 gal/min

Unit# 00001 Test# 2

INPUT 1: Level (F) TOC
Recovery
SWL 65.63 [DOES NOT AGREE WITH DATA]
Scale factor 10.03
Offset 0.05
Step# 0 07/02 12:14

Time:min	Time:hrs	D-T-W:Ft
0.000	0.00000	65.08
0.003	0.00006	66.12
0.007	0.00011	65.45
0.010	0.00017	65.33
0.013	0.00022	65.25
0.017	0.00028	65.20
0.020	0.00033	65.11
0.023	0.00039	65.03
0.027	0.00044	64.95
0.030	0.00050	64.87
0.033	0.00056	64.79
0.050	0.00083	64.45
0.067	0.00111	64.17
0.083	0.00139	63.93
0.100	0.00167	63.74
0.117	0.00194	63.57
0.133	0.00222	63.43
0.150	0.00250	63.32
0.167	0.00278	63.21
0.183	0.00306	63.10
0.200	0.00333	63.01
0.217	0.00361	62.93
0.233	0.00389	62.86
0.250	0.00417	62.80
0.267	0.00444	62.76
0.283	0.00472	62.71
0.300	0.00500	62.67
0.317	0.00528	62.63
0.333	0.00556	62.60
0.417	0.00695	62.46
0.500	0.00833	62.38
0.583	0.00972	62.32
0.667	0.01111	62.28
0.750	0.01250	62.25
0.833	0.01389	62.23
0.917	0.01528	62.21
1.000	0.01667	62.20
1.083	0.01805	62.18
1.167	0.01945	62.17
1.250	0.02083	62.16

9313090.0425

WELL N-76 RECOVERY AFTER DEVELOPMENT

Time:min	Time:hrs	D-T-W:Ft
1.333	0.02222	62.14
1.417	0.02361	62.14
1.500	0.02500	62.12
1.583	0.02639	62.11
1.667	0.02778	62.10
1.750	0.02917	62.09
1.833	0.03056	62.07
1.917	0.03195	62.06
2.000	0.03333	62.04
2.500	0.04167	61.94
3.000	0.05000	61.87
3.500	0.05833	61.82
4.000	0.06667	61.76
4.500	0.07500	61.72
5.000	0.08333	61.69
5.500	0.09167	61.66
6.000	0.10000	61.64
6.500	0.10833	61.62
7.000	0.11667	61.60
7.500	0.12500	61.58
8.000	0.13333	61.56
8.500	0.14167	61.55
9.000	0.15000	61.53
9.500	0.15833	61.52
10.000	0.16667	61.51
12.000	0.20000	61.46
14.000	0.23333	61.43
16.000	0.26667	61.40
18.000	0.30000	61.38
20.000	0.33333	61.35
22.000	0.36667	61.33
24.000	0.40000	61.31
26.000	0.43333	61.29
28.000	0.46667	61.29
30.000	0.50000	61.27
32.000	0.53333	61.26
34.000	0.56667	61.25
36.000	0.60000	61.24
38.000	0.63333	61.23
40.000	0.66667	61.21
42.000	0.70000	61.20
44.000	0.73333	61.19
46.000	0.76667	61.18
48.000	0.80000	61.18
50.000	0.83333	61.17
52.000	0.86667	61.16
54.000	0.90000	61.16
56.000	0.93333	61.14
58.000	0.96667	61.14
60.000	1.00000	61.13
62.000	1.03333	61.13
64.000	1.06667	61.14

9313090.0426

WELL N-76 BASELINE FOR SLUG INJECTION

SE1000B
Environmental Logger
07/13 07:09

Unit# 00001 Test# 0

INPUT 1: Level (F) TOC

Reference 67.60
Scale factor 10.03
Offset 0.05

Step# 0 07/09 11:10

Time:min	Time:hrs	D-T-W:Ft	d(WL):Ft
0	0.0000	67.64	0.04
1	0.0167	67.64	0.04
2	0.0333	67.64	0.04
3	0.0500	67.64	0.04
4	0.0667	67.64	0.04
5	0.0833	67.63	0.03
6	0.1000	67.63	0.03
7	0.1167	67.63	0.03
8	0.1333	67.64	0.04
9	0.1500	67.63	0.03
10	0.1667	67.64	0.04
11	0.1833	67.64	0.04
12	0.2000	67.64	0.04
13	0.2167	67.64	0.04
14	0.2333	67.64	0.04
15	0.2500	67.64	0.04
16	0.2667	67.64	0.04
17	0.2833	67.64	0.04
18	0.3000	67.64	0.04
19	0.3167	67.64	0.04
20	0.3333	67.65	0.05
21	0.3500	67.64	0.04
22	0.3667	67.65	0.05
23	0.3833	67.65	0.05
24	0.4000	67.64	0.04
25	0.4167	67.65	0.05
26	0.4333	67.64	0.04
27	0.4500	67.65	0.05
28	0.4667	67.65	0.05
29	0.4833	67.65	0.05
30	0.5000	67.65	0.05
31	0.5167	67.65	0.05
32	0.5333	67.65	0.05
33	0.5500	67.65	0.05
34	0.5667	67.65	0.05
35	0.5833	67.65	0.05

9313090.0427

WELL N-76 BASELINE FOR SLUG INJECTION

Time:min	Time:hrs	D-T-W:Ft	d(WL):Ft
36	0.6000	67.65	0.05
37	0.6167	67.65	0.05
38	0.6333	67.65	0.05
39	0.6500	67.65	0.05
40	0.6667	67.65	0.05
41	0.6833	67.65	0.05
42	0.7000	67.65	0.05
43	0.7167	67.65	0.05
44	0.7333	67.65	0.05
45	0.7500	67.66	0.06
46	0.7667	67.66	0.06
47	0.7833	67.65	0.05
48	0.8000	67.65	0.05
49	0.8167	67.65	0.05
50	0.8333	67.65	0.05
51	0.8500	67.65	0.05
52	0.8667	67.66	0.06
53	0.8833	67.65	0.05
54	0.9000	67.66	0.06
55	0.9167	67.66	0.06
56	0.9333	67.66	0.06
57	0.9500	67.65	0.05
58	0.9667	67.66	0.06

9313090.0428

AQUIFER TEST SUMMARY

WELL 199-N-76 SLUG INJECTION AND WITHDRAWAL

Purpose of Tests: to estimate aquifer transmissivity or hydraulic conductivity

Hydrogeologic Unit Tested: The uppermost aquifer (Ringold Formation), comprising gravelly sand

Thickness of Aquifer: 30 ft (estimated; borehole did not fully penetrate aquifer)

Depth of Screened or Open Interval Exposed to Aquifer During Test: Screened 84.39 to 64.30 ft below top of casing; Water level at 67.6 ft below top of casing; tested thickness = 16.79 ft

Diameter of Well Casing: 4 in (0.333 ft)

Diameter of Well Screen: 4 in (0.333 ft)

Diameter of Screen plus Sand Pack: 10 in (0.833 ft)

Porosity of Sand Pack: 0.4

Observation Well(s) Used: None Distance from Pumping Well: N/A

Depth of Screened Interval of Observation Well: N/A

Date of Tests: 9 July 92

Slugging Rod Dimension: 2-in diameter by 6-ft length (0.13 ft^3); Due to a miscalculation the rod was partially submerged before the test began. The effective volume of the slugging rod for injection was 0.06 ft^3. The slugging rod was completely removed from the well for slug withdrawal.

Duration of Test: Injection: 58 min; Withdrawal: 12 min

Water-Level Measurement Methods: pressure transducer with data logger

Maximum Change in Water Level: 5.3 ft (see remarks)

9313090.0429

RESULTS:

Test	Transmissivity (ft^2/d)*	Hydraulic Conductivity (ft/d)*
Injection	Not determined	Not determined
Withdrawal	(1200)	73

* Bouwer and Rice method estimates hydraulic conductivity; Transmissivity was estimated by the equation T=Kb, where b = screened aquifer thickness.

Remarks:

The maximum change in water level after slug injection was higher than the expected 1.5 ft due to oscillations. Water levels recovered rapidly (less than 0.5 min) after slug injection and oscillated until water levels had virtually recovered (Figures D-7 and D-8). Slug injection data could not be analyzed.

Water levels also recovered rapidly after slug withdrawal but oscillations were less significant and the Bouwer and Rice method was applied (Figure D-9).

9313090.0430

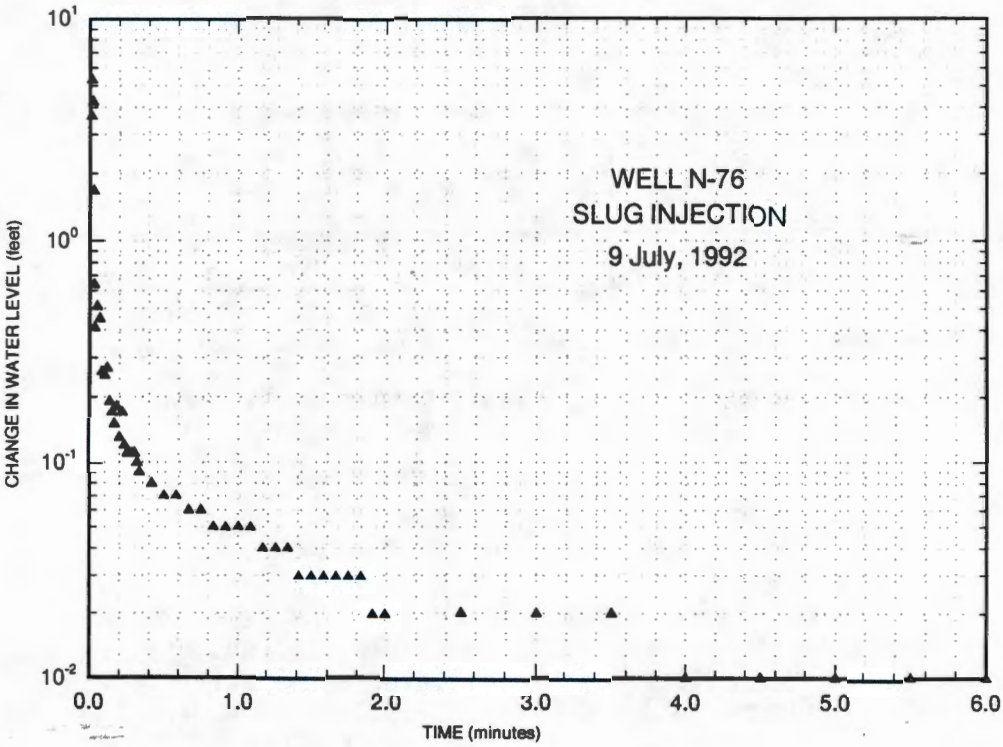

Figure D-7. Well N-76 Slug Injection.

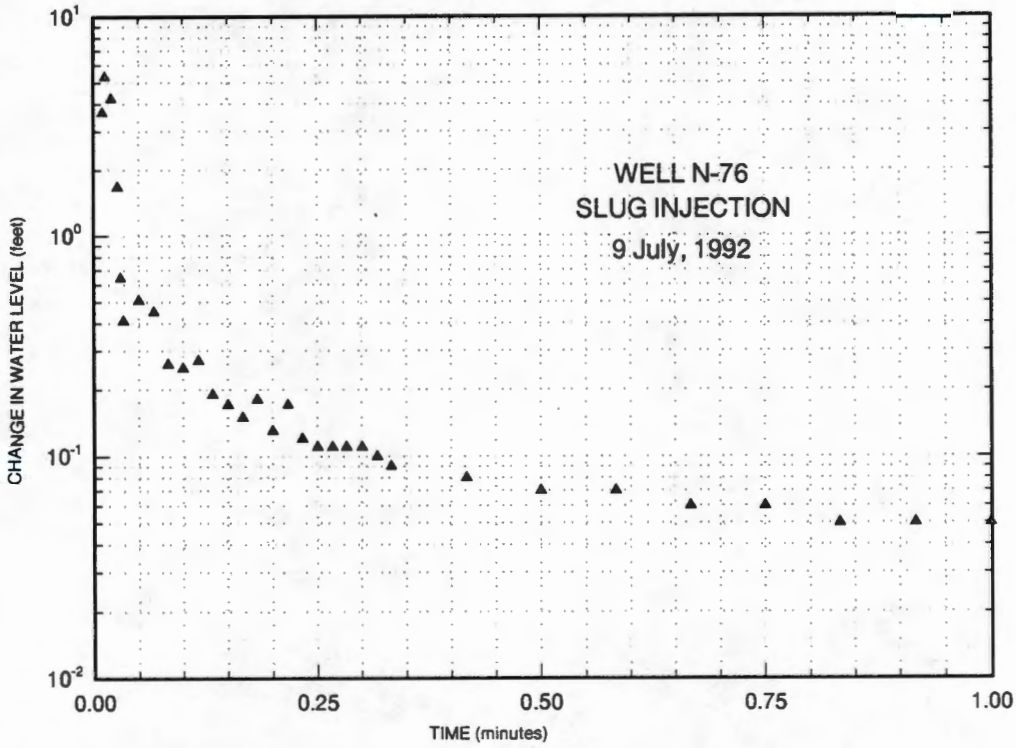

Figure D-8. Well N-75 Slug Injection (early time data).

9313090.0431

9313090.0932

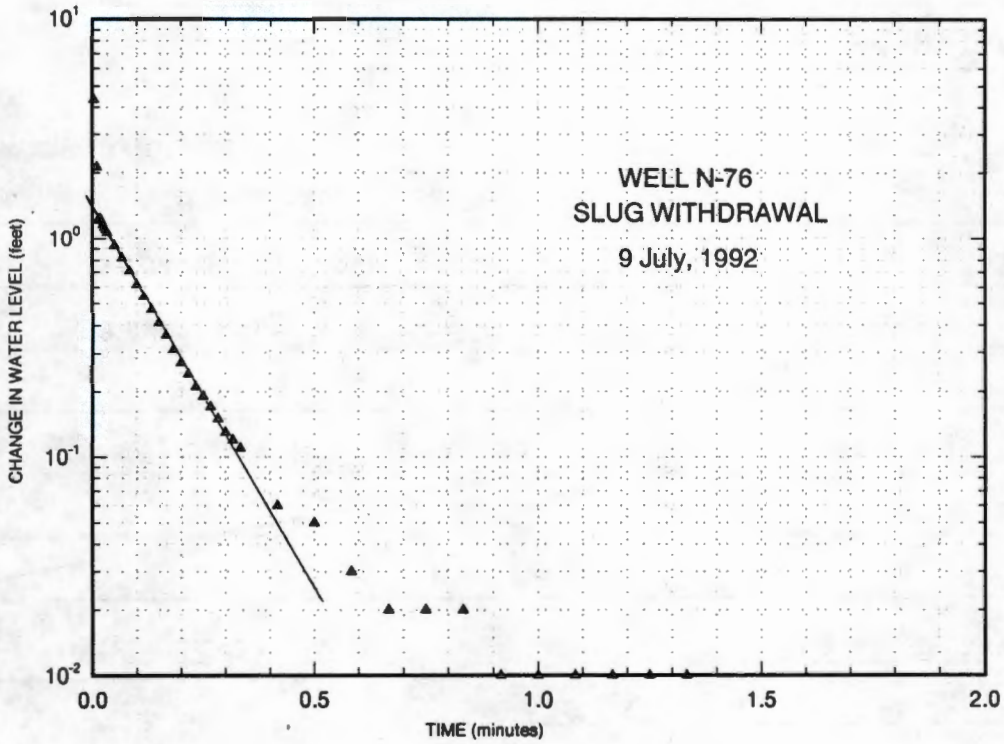

Figure D-9. Well N-76 Slug Withdrawal.

BOREHOLE TEST INFORMATION

VALIDATED KDR 12/9/92 SIGNATURE/DATE

Borehole 199-N76 Borehole Diameter 4 inches Hanford Coordinates N/A

Interval Tested 64.30'-84.39' BTOC Depth Interval 64.30'-84.39' BTOC

Test Type Instantaneous Slug test Borehole Depth 84.39' BTOC

Instruction Used WHC-CM-7-7 EII 10.1

EQUIPMENT

NAME	DESCRIPTION
ELECTRIC SOUNDER	SOLINST SN-ET-4
DATA LOGGER	IN SITU INC. SN-IKB-246
PRESSURE TRANSDUCER	IN SITU Inc. SN-350976
SLUGGING ROD	6'x 2" (0.13 ft^3)*
STEEL MEASURING TAPE	GRADUATED STEEL TAPE (~~500'~~ 300' ±0.5)

MEASUREMENT DATUM

Control Datum Top of 6" Casing (T.O.C.)

Elevation N/A

Electric Sounder T.O.C.

Steel Tape T.O.C.

Pressure Transducer T.O.C.

WELL HEAD DIAGRAM

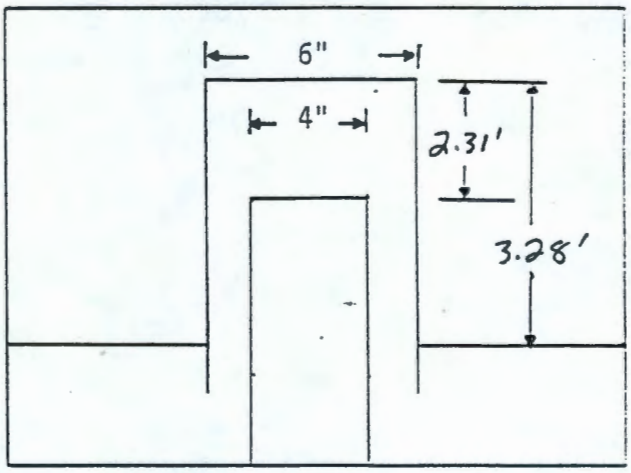

COMMENTS

* Due to a miscalculation the Slug was partially in the water before Slug injection, this changed the effective volume of the Slug to 0.06 ft^3 for the Injection test. This did not effect the withdrawal of the Slug.

Recorded by: Robert S. Edrington (Sign and Print Name) 7/20/92 (Date)

BD-6000-295 (05/89)

9313090.0433

INSTANTANEOUS SLUG TEST DATA SHEET -- INJECTION

B ole 199-N76

Interval Tested 64.30'-84.39' BTOC*

Depth to Water* (Below Top of Casing) 67.60'

Date 7/9/92

Measured by Robert S. Edrington

Slug Volume ~~0.13ft³~~ 0.06ft³ Barometer Reading (Beginning) N/A (End) N/A

Time 1209

Transducer Measurement Units Feet

Depth to Transducer (Below water) 14.09

Initial Pressure (P_i) 67.60' BTOC*

Slug Level or Pressure (P_{max}) 62.29' BTOC*

Borehole Diameter 4"

Time Observed	Time Elapsed	Pressure Trans. Measurement	Time Observed	Time Elapsed	Pressure Trans. Measurement	Time Observed	Time Elapsed	Pressure Trans. Measurement
		SEE ATTACHED			SEE ATTACHED			

Recorded by Robert S. Edrington (Sign and Print Name) Robert S. Edrington 7/20/92 (Date)

9313090.0134

WELL N-76 SLUG INJECTION

SE1000B
Environmental Logger
07/13 07:07

Unit# 00001 Test# 1

INPUT 1: Level (F) TOC

Reference 67.60
Scale factor 10.03
Offset 0.05

Step# 0 07/09 12:09

Time:min	Time:hrs	D-T-W:Ft	d(WL):Ft
0.000	0.00000	67.60	0.00
0.003	0.00006	67.60	0.00
0.007	0.00011	67.60	0.00
0.010	0.00017	63.95	3.65
0.013	0.00022	62.29	5.31
0.017	0.00028	70.50	-2.90
0.020	0.00033	63.37	4.23
0.023	0.00039	68.73	-1.13
0.027	0.00044	65.93	1.67
0.030	0.00050	66.96	0.64
0.033	0.00056	67.19	0.41
0.050	0.00083	67.09	0.51
0.067	0.00111	67.15	0.45
0.083	0.00139	67.34	0.26
0.100	0.00167	67.35	0.25
0.117	0.00194	67.33	0.27
0.133	0.00222	67.41	0.19
0.150	0.00250	67.43	0.17
0.167	0.00278	67.45	0.15
0.183	0.00306	67.42	0.18
0.200	0.00333	67.47	0.13
0.217	0.00361	67.43	0.17
0.233	0.00389	67.48	0.12
0.250	0.00417	67.49	0.11
0.267	0.00444	67.49	0.11
0.283	0.00472	67.49	0.11
0.300	0.00500	67.49	0.11
0.317	0.00528	67.50	0.10
0.333	0.00556	67.51	0.09
0.417	0.00695	67.52	0.08
0.500	0.00833	67.53	0.07
0.583	0.00972	67.53	0.07
0.667	0.01111	67.54	0.06
0.750	0.01250	67.54	0.06
0.833	0.01389	67.55	0.05
0.917	0.01528	67.55	0.05
1.000	0.01667	67.55	0.05

9313090.0435

WELL N-76 SLUG INJECTION

Time:min	Time:hrs	D-T-W:Ft	d(WL):Ft
1.083	0.01805	67.55	0.05
1.167	0.01945	67.56	0.04
1.250	0.02083	67.56	0.04
1.333	0.02222	67.56	0.04
1.417	0.02361	67.57	0.03
1.500	0.02500	67.57	0.03
1.583	0.02639	67.57	0.03
1.667	0.02778	67.57	0.03
1.750	0.02917	67.57	0.03
1.833	0.03056	67.57	0.03
1.917	0.03195	67.58	0.02
2.000	0.03333	67.58	0.02
2.500	0.04167	67.58	0.02
3.000	0.05000	67.58	0.02
3.500	0.05833	67.58	0.02
4.000	0.06667	67.59	0.01
4.500	0.07500	67.59	0.01
5.000	0.08333	67.59	0.01
5.500	0.09167	67.59	0.01
6.000	0.10000	67.59	0.01
6.500	0.10833	67.60	0.00
7.000	0.11667	67.59	0.01
7.500	0.12500	67.59	0.01
8.000	0.13333	67.60	0.00
8.500	0.14167	67.60	0.00
9.000	0.15000	67.60	0.00
9.500	0.15833	67.59	0.01
10.000	0.16667	67.59	0.01
12.000	0.20000	67.60	0.00
14.000	0.23333	67.60	0.00
16.000	0.26667	67.60	0.00
18.000	0.30000	67.59	0.01
20.000	0.33333	67.60	0.00
22.000	0.36667	67.59	0.01
24.000	0.40000	67.60	0.00
26.000	0.43333	67.59	0.01
28.000	0.46667	67.59	0.01
30.000	0.50000	67.59	0.01
32.000	0.53333	67.59	0.01
34.000	0.56667	67.60	0.00

9313090.0436

WELL N-76 BASELINE FOR SLUG WITHDRAWAL

SE1000B
Environmental Logger
07/13 07:05

Unit# 00001 Test# 2

INPUT 1: Level (F) TOC

Reference 67.60
Scale factor 10.03
Offset 0.05

Step# 0 07/09 12:45

Time:min	Time:hrs	D-T-W:Ft	d(WL):Ft
0	0.0000	67.6	0
1	0.0167	67.59	-0.01
2	0.0333	67.59	-0.01
3	0.0500	67.59	-0.01
4	0.0667	67.58	-0.02
5	0.0833	67.59	-0.01
6	0.1000	67.59	-0.01
7	0.1167	67.59	-0.01
8	0.1333	67.59	-0.01
9	0.1500	67.59	-0.01
10	0.1667	67.59	-0.01
11	0.1833	67.59	-0.01
12	0.2000	67.59	-0.01
13	0.2167	67.59	-0.01
14	0.2333	67.58	-0.02
15	0.2500	67.58	-0.02
16	0.2667	67.58	-0.02
17	0.2833	67.58	-0.02
18	0.3000	67.59	-0.01
19	0.3167	67.59	-0.01
20	0.3333	67.59	-0.01
21	0.3500	67.58	-0.02
22	0.3667	67.59	-0.01
23	0.3833	67.59	-0.01
24	0.4000	67.59	-0.01
25	0.4167	67.59	-0.01
26	0.4333	67.58	-0.02
27	0.4500	67.58	-0.02
28	0.4667	67.58	-0.02
29	0.4833	67.58	-0.02
30	0.5000	67.58	-0.02
31	0.5167	67.59	-0.01
32	0.5333	67.58	-0.02
33	0.5500	67.59	-0.01
34	0.5667	67.59	-0.01
35	0.5833	67.59	-0.01

9313090.0437

WELL N-76 SLUG WITHDRAWAL

SE1000B
Environmental Logger
07/13 07:02

Unit# 00001 Test# 3

INPUT 1: Level (F) TOC

Reference 67.60
Scale factor 10.03
Offset 0.05

Step# 0 07/09 13:21

Time:min	Time:hrs	D-T-W:Ft	d(WL):Ft
0.0000	0.0000	67.6	0
0.0033	0.0001	71.94	4.34
0.0066	0.0001	66.95	-0.65
0.0099	0.0002	69.72	2.12
0.0133	0.0002	68.82	1.22
0.0166	0.0003	68.83	1.23
0.0200	0.0003	68.81	1.21
0.0233	0.0004	68.76	1.16
0.0266	0.0004	68.73	1.13
0.0300	0.0005	68.7	1.1
0.0333	0.0006	68.67	1.07
0.0500	0.0008	68.53	0.93
0.0666	0.0011	68.42	0.82
0.0833	0.0014	68.31	0.71
0.1000	0.0017	68.22	0.62
0.1166	0.0019	68.14	0.54
0.1333	0.0022	68.07	0.47
0.1500	0.0025	68.01	0.41
0.1666	0.0028	67.96	0.36
0.1833	0.0031	67.91	0.31
0.2000	0.0033	67.87	0.27
0.2166	0.0036	67.84	0.24
0.2333	0.0039	67.81	0.21
0.2500	0.0042	67.79	0.19
0.2666	0.0044	67.77	0.17
0.2833	0.0047	67.75	0.15
0.3000	0.0050	67.73	0.13
0.3166	0.0053	67.72	0.12
0.3333	0.0056	67.71	0.11
0.4167	0.0069	67.66	0.06
0.5000	0.0083	67.65	0.05
0.5833	0.0097	67.63	0.03
0.6667	0.0111	67.62	0.02
0.7500	0.0125	67.62	0.02
0.8333	0.0139	67.62	0.02
0.9167	0.0153	67.61	0.01
1.0000	0.0167	67.61	0.01

9313090.0438

WELL N-76 SLUG WITHDRAWAL

Time:min	Time:hrs	D-T-W:Ft	d(WL):Ft
1.0833	0.0181	67.61	0.01
1.1667	0.0194	67.61	0.01
1.2500	0.0208	67.61	0.01
1.3333	0.0222	67.61	0.01
1.4166	0.0236	67.6	0
1.5000	0.0250	67.6	0
1.5833	0.0264	67.6	0
1.6667	0.0278	67.6	0
1.7500	0.0292	67.6	0
1.8333	0.0306	67.61	0.01
1.9167	0.0319	67.6	0
2.0000	0.0333	67.6	0
2.5000	0.0417	67.6	0
3.0000	0.0500	67.6	0
3.5000	0.0583	67.6	0
4.0000	0.0667	67.6	0
4.5000	0.0750	67.6	0
5.0000	0.0833	67.6	0
5.5000	0.0917	67.6	0
6.0000	0.1000	67.6	0
6.5000	0.1083	67.6	0
7.0000	0.1167	67.6	0
7.5000	0.1250	67.6	0
8.0000	0.1333	67.6	0
8.5000	0.1417	67.6	0
9.0000	0.1500	67.6	0
9.5000	0.1583	67.6	0
10.0000	0.1667	67.6	0
12.0000	0.2000	67.6	0

9313090.0439

WELL N-76 SLUG INJECTION DATA COULD NOT BE ANALYZED.
****

WELL N-76 SLUG WITHDRAWAL
****
THE BELOW HYDRAULIC CONDUCTIVITY VALUE WAS CALCULATED
USING THE BOUWER AND RICE SLUG TEST METHOD.
SOURCE= "THE BOUWER AND RICE SLUG TEST-AN UPDATE"
GROUND WATER, VOL 27, NO. 3, MAY-JUNE 1989.
****
****
RADIUS OF CASING USED IN CALCULATIONS HAS BEEN
CORRECTED FOR THE THICKNESS OF GRAVEL OR SAND
PACK DUE TO WATER LEVEL CHANGES IN THE SCREEN OR
OPEN INTERVAL OF WELL.
****

Rc (ft)	Rw (ft)	Le (ft)	Lw (ft)	H (ft)
0.2937	0.4170	16.7900	16.7900	30.0000

****
Le/Rw = 40.2637900
A= 2.8572500
B= 4.466348E-001
C= 2.4517180
SANDPACK POROSITY= 4.000000E-001
t (min)= 5.000000E-001
1/t= 2.0000000
Yo= (ft) 1.2000000
Yt= (ft) 2.200000E-002
1/t ln(Yo/Yt)= 7.9980690
ln[(H-Lw)/Rw]= 3.4556430
ln(Re/Rw)= 2.4572510
****
K (ft/day) = 72.7230100
****
T OF THE SATURATED SCREEN INTERVAL
(ft2/day)= 1221.0190000
****

9313090.0440

9313090.0441

AQUIFER TEST SUMMARY

WELL 199-N-77 DEVELOPMENT AND RECOVERY

Purpose of Tests: The well was pumped for development. Water levels were measured during drawdown and recovery for use in estimating aquifer transmissivity.

Hydrogeologic Unit Tested: The uppermost aquifer (Ringold Formation), comprising sandy gravel.

Thickness of Aquifer: 30 ft

Depth of Screened or Open Interval Exposed to Aquifer During Test: Screened 98.9 to 88.66 ft below top of casing; Water level remained above the screened interval throughout the test. Tested thickness = 10.3 ft

Diameter of Well Casing: 4 in (0.333 ft)

Diameter of Well Screen: 4 in (0.333 ft)

Diameter of Screen plus Sand Pack: 10 in (0.833 ft)

Porosity of Sand Pack: 0.4

Observation Well(s) Used: None Distance from Pumping Well: N/A

Depth of Screened Interval of Observation Well: N/A

Date of Tests: 18 Nov 92

Pumping Rate: average discharge = 14.2 gal/min (2734 ft^3/d)

Duration of Test: Discharge: 76 min; Recovery monitored for 30 min

Water-Level Measurement Methods: pressure transducer with data logger

Maximum Change in Water Level: 3.7 ft

RESULTS: Analysis was not valid because delayed yield was significant throughout the test. Recovery data were affected by the slug of water from the riser pipe (see Section D.2.3).

9313090.0442

WELL N-77 BASELINE BEFORE DEVELOPMENT

SE2000
Environmental Logger
11/19 13:09

Unit# 193 Test 0

INPUT 1: Level (F) TOC

Reference	71.060
SG	1.000
Linearity	0.000
Scale factor	10.110
Offset	0.000
Delay mSEC	50.000

Step 0 11/18 08:29:02

Time:min	Time:hrs	D-T-W:Ft	d(WL):Ft
0	0.000	71.060	0.000
1	0.017	71.056	0.004
2	0.033	71.053	0.007
3	0.050	71.050	0.010
4	0.067	71.047	0.013
5	0.083	71.047	0.013
6	0.100	71.047	0.013
7	0.117	71.047	0.013
8	0.133	71.047	0.013
9	0.150	71.047	0.013
10	0.167	71.044	0.016
11	0.183	71.047	0.013
12	0.200	71.047	0.013
13	0.217	71.047	0.013
14	0.233	71.047	0.013
15	0.250	71.047	0.013
16	0.267	71.047	0.013
17	0.283	71.050	0.010
18	0.300	71.050	0.010
19	0.317	71.050	0.010
20	0.333	71.047	0.013
21	0.350	71.047	0.013
22	0.367	71.044	0.016
23	0.383	71.044	0.016

9313090.0443

WELL N-77 DRAWDOWN DURING DEVELOPMENT

Q = 14.3 gal/min

SE2000
Environmental Logger
11/19 10:46

Unit# 193 Test 1

INPUT 1: Level (F) TOC

Reference	71.060
SG	1.000
Linearity	0.000
Scale factor	10.110
Offset	0.000
Delay mSEC	50.000

Step 0 11/18 08:53:23

s'=s-s^2/2b
b = 30 ft

Time:min	Time:hrs	D-T-W:Ft	s	s'
0.001	0.0000	71.213	0.153	0.1526
0.008	0.0001	71.334	0.274	0.2727
0.017	0.0003	71.267	0.207	0.2063
0.025	0.0004	71.398	0.338	0.3361
0.033	0.0006	71.570	0.510	0.5057
0.042	0.0007	71.679	0.619	0.6126
0.050	0.0008	71.768	0.708	0.6996
0.058	0.0010	71.861	0.801	0.7903
0.067	0.0011	71.940	0.880	0.8671
0.075	0.0013	72.007	0.947	0.9321
0.083	0.0014	72.074	1.014	0.9969
0.100	0.0017	72.193	1.133	1.1116
0.117	0.0019	72.298	1.238	1.2125
0.133	0.0022	72.384	1.324	1.2948
0.150	0.0025	72.467	1.407	1.3740
0.167	0.0028	72.537	1.477	1.4406
0.183	0.0031	72.604	1.544	1.5043
0.200	0.0033	72.662	1.602	1.5592
0.217	0.0036	72.713	1.653	1.6075
0.233	0.0039	72.764	1.704	1.6556
0.250	0.0042	72.809	1.749	1.6980
0.267	0.0044	72.856	1.796	1.7422
0.283	0.0047	72.888	1.828	1.7723
0.300	0.0050	72.920	1.860	1.8023
0.317	0.0053	72.962	1.902	1.8417
0.333	0.006	72.991	1.931	1.8689
0.417	0.007	73.102	2.042	1.9725
0.500	0.008	73.201	2.141	2.0646
0.583	0.010	73.284	2.224	2.1416
0.667	0.011	73.348	2.288	2.2008
0.750	0.013	73.409	2.349	2.2570
0.833	0.014	73.472	2.412	2.3150

9313090.0444

WELL N-77 DRAWDOWN DURING DEVELOPMENT

Time:min	Time:hrs	D-T-W:Ft	s	s'
0.917	0.015	73.520	2.460	2.3591
1.000	0.017	73.565	2.505	2.4004
1.083	0.018	73.616	2.556	2.4471
1.167	0.019	73.658	2.598	2.4855
1.250	0.021	73.699	2.639	2.5229
1.333	0.022	73.731	2.671	2.5521
1.417	0.024	73.766	2.706	2.5840
1.500	0.025	73.801	2.741	2.6158
1.583	0.026	73.843	2.783	2.6539
1.667	0.028	73.862	2.802	2.6711
1.750	0.029	73.900	2.840	2.7056
1.833	0.031	73.919	2.859	2.7228
1.917	0.032	73.951	2.891	2.7517
2.000	0.033	73.974	2.914	2.7725
2.500	0.042	74.098	3.038	2.8842
3.000	0.050	74.207	3.147	2.9819
3.500	0.058	74.280	3.220	3.0472
4.000	0.067	74.331	3.271	3.0927
4.500	0.075	74.385	3.325	3.1407
5.000	0.083	74.424	3.364	3.1754
5.500	0.092	74.471	3.411	3.2171
6.000	0.100	74.503	3.443	3.2454
6.500	0.108	74.529	3.469	3.2684
7.000	0.117	74.551	3.491	3.2879
7.500	0.125	74.574	3.514	3.3082
8.000	0.133	74.593	3.533	3.3250
8.500	0.142	74.599	3.539	3.3303
9.000	0.150	74.612	3.552	3.3417
9.500	0.158	74.622	3.562	3.3505
10.000	0.167	74.641	3.581	3.3673
11.000	0.183	74.653	3.593	3.3778
12.000	0.200	74.679	3.619	3.4007
13.000	0.217	74.682	3.622	3.4034
14.000	0.233	74.679	3.619	3.4007
15.000	0.250	74.692	3.632	3.4121
16.000	0.267	74.698	3.638	3.4174
17.000	0.283	74.695	3.635	3.4148
18.000	0.300	74.708	3.648	3.4262
19.000	0.317	74.704	3.644	3.4227
20.000	0.333	74.701	3.641	3.4201
21.000	0.350	74.701	3.641	3.4201
22.000	0.367	74.714	3.654	3.4315
23.000	0.383	74.714	3.654	3.4315
24.000	0.400	74.714	3.654	3.4315
25.000	0.417	74.704	3.644	3.4227
26.000	0.433	74.714	3.654	3.4315
27.000	0.450	74.720	3.660	3.4367
28.000	0.467	74.720	3.660	3.4367
29.000	0.483	74.724	3.664	3.4403
30.000	0.500	74.724	3.664	3.4403
31.000	0.517	74.724	3.664	3.4403

9313090.0445

WELL N-77 DRAWDOWN DURING DEVELOPMENT

Time:min	Time:hrs	D-T-W:Ft	s	s'
32.000	0.533	74.727	3.667	3.4429
33.000	0.550	74.724	3.664	3.4403
34.000	0.567	74.733	3.673	3.4482
35.000	0.583	74.730	3.670	3.4455
36.000	0.600	74.720	3.660	3.4367
37.000	0.617	74.730	3.670	3.4455
38.000	0.633	74.736	3.676	3.4508
39.000	0.650	74.733	3.673	3.4482
40.000	0.667	74.733	3.673	3.4482
41.000	0.683	74.740	3.680	3.4543
42.000	0.700	74.746	3.686	3.4596
43.000	0.717	74.733	3.673	3.4482
44.000	0.733	74.740	3.680	3.4543
45.000	0.750	74.746	3.686	3.4596
46.000	0.767	74.746	3.686	3.4596
47.000	0.783	74.743	3.683	3.4569
48.000	0.800	74.743	3.683	3.4569
49.000	0.817	74.743	3.683	3.4569
50.000	0.833	74.746	3.686	3.4596
51.000	0.850	74.752	3.692	3.4648
52.000	0.867	74.756	3.696	3.4683
53.000	0.883	74.752	3.692	3.4648
54.000	0.900	74.752	3.692	3.4648
55.000	0.917	74.756	3.696	3.4683
56.000	0.933	74.759	3.699	3.4710
57.000	0.950	74.759	3.699	3.4710
58.000	0.967	74.749	3.689	3.4622
59.000	0.983	74.759	3.699	3.4710
60.000	1.000	74.765	3.705	3.4762
61.000	1.017	74.759	3.699	3.4710
62.000	1.033	74.759	3.699	3.4710
63.000	1.050	74.752	3.692	3.4648
64.000	1.067	74.759	3.699	3.4710
65.000	1.083	74.762	3.702	3.4736
66.000	1.100	74.765	3.705	3.4762
67.000	1.117	74.768	3.708	3.4788
68.000	1.133	74.762	3.702	3.4736
69.000	1.150	74.765	3.705	3.4762
70.000	1.167	74.772	3.712	3.4824
71.000	1.183	74.768	3.708	3.4788
72.000	1.200	74.765	3.705	3.4762
73.000	1.217	74.768	3.708	3.4788
74.000	1.233	74.772	3.712	3.4824
75.000	1.250	74.775	3.715	3.4850
76.000	1.267	74.775	3.715	3.4850

9313090.0446

WELL N-77 RECOVERY AFTER DEVELOPMENT

Q = 14.3 gal/min

SE2000
Environmental Logger
11/19 10:34

Unit# 193 Test 2

INPUT 1: Level (F) TOC

Reference	71.060
SG	1.000
Linearity	0.000
Scale factor	10.110
Offset	0.000
Delay mSEC	50.000

Step 0 11/18 10:10:44 s=s-s^2/2b b=30 ft tp=76 min

Time:min	Time:hrs	D-T-W:Ft	s	s'	(tp-tr)/tr
0.001	0.0000	74.545	3.485	3.2826	76001.00
0.008	0.0001	74.558	3.498	3.2941	9157.63
0.017	0.0003	74.516	3.456	3.2569	4579.31
0.025	0.0004	74.369	3.309	3.1265	3041.00
0.033	0.0006	74.210	3.150	2.9846	2283.28
0.042	0.0007	74.079	3.019	2.8671	1827.92
0.050	0.0008	73.970	2.910	2.7689	1521.00
0.058	0.0010	73.871	2.811	2.6793	1304.60
0.067	0.0011	73.782	2.722	2.5985	1142.14
0.075	0.0013	73.699	2.639	2.5229	1014.33
0.083	0.0014	73.622	2.562	2.4526	913.36
0.100	0.0017	73.488	2.428	2.3297	761.00
0.117	0.0019	73.374	2.314	2.2248	652.80
0.133	0.0022	73.268	2.208	2.1267	571.14
0.150	0.0025	73.179	2.119	2.0442	507.67
0.167	0.0028	73.093	2.033	1.9641	457.18
0.183	0.0031	73.019	1.959	1.8950	415.62
0.200	0.0033	72.949	1.889	1.8295	381.00
0.217	0.0036	72.885	1.825	1.7695	351.88
0.233	0.0039	72.828	1.768	1.7159	326.76
0.250	0.0042	72.773	1.713	1.6641	305.00
0.267	0.0044	72.726	1.666	1.6197	286.07
0.283	0.0047	72.678	1.618	1.5744	269.27
0.300	0.0050	72.633	1.573	1.5318	254.33
0.317	0.0053	72.592	1.532	1.4929	241.05
0.333	0.006	72.556	1.496	1.4587	229.02
0.417	0.007	72.406	1.346	1.3158	183.43
0.500	0.008	72.279	1.219	1.1942	153.00
0.583	0.010	72.173	1.113	1.0924	131.29
0.667	0.011	72.087	1.027	1.0094	115.01
0.750	0.013	72.017	0.957	0.9417	102.33
0.833	0.014	71.960	0.900	0.8865	92.20

9313090.0447

WELL N-77 RECOVERY AFTER DEVELOPMENT

Time:min	Time:hrs	D-T-W:Ft	s	s'	(tp-tr)/tr
0.917	0.015	71.909	0.849	0.8370	83.92
1.000	0.017	71.864	0.804	0.7932	77.00
1.083	0.018	71.829	0.769	0.7591	71.16
1.167	0.019	71.797	0.737	0.7279	66.15
1.250	0.021	71.768	0.708	0.6996	61.80
1.333	0.022	71.743	0.683	0.6752	58.00
1.417	0.024	71.723	0.663	0.6557	54.65
1.500	0.025	71.701	0.641	0.6342	51.67
1.583	0.026	71.685	0.625	0.6185	49.00
1.667	0.028	71.672	0.612	0.6058	46.60
1.750	0.029	71.660	0.600	0.5940	44.43
1.833	0.031	71.647	0.587	0.5813	42.46
1.917	0.032	71.634	0.574	0.5685	40.65
2.000	0.033	71.624	0.564	0.5587	39.00
2.500	0.042	71.554	0.494	0.4899	31.40
3.000	0.050	71.481	0.421	0.4180	26.33
3.500	0.058	71.420	0.360	0.3578	22.71
4.000	0.067	71.366	0.306	0.3044	20.00
4.500	0.075	71.324	0.264	0.2628	17.89
5.000	0.083	71.289	0.229	0.2281	16.20
5.500	0.092	71.261	0.201	0.2003	14.82
6.000	0.100	71.235	0.175	0.1745	13.67
6.500	0.108	71.216	0.156	0.1556	12.69
7.000	0.117	71.200	0.140	0.1397	11.86
7.500	0.125	71.187	0.127	0.1267	11.13
8.000	0.133	71.174	0.114	0.1138	10.50
8.500	0.142	71.165	0.105	0.1048	9.94
9.000	0.150	71.155	0.095	0.0948	9.44
9.500	0.158	71.149	0.089	0.0889	9.00
10.000	0.167	71.146	0.086	0.0859	8.60
11.000	0.183	71.133	0.073	0.0729	7.91
12.000	0.200	71.130	0.070	0.0699	7.33
13.000	0.217	71.123	0.063	0.0629	6.85
14.000	0.233	71.120	0.060	0.0599	6.43
15.000	0.250	71.117	0.057	0.0569	6.07
16.000	0.267	71.117	0.057	0.0569	5.75
17.000	0.283	71.114	0.054	0.0540	5.47
18.000	0.300	71.114	0.054	0.0540	5.22
19.000	0.317	71.111	0.051	0.0510	5.00
20.000	0.333	71.111	0.051	0.0510	4.80
21.000	0.350	71.107	0.047	0.0470	4.62
22.000	0.367	71.111	0.051	0.0510	4.45
23.000	0.383	71.107	0.047	0.0470	4.30
24.000	0.400	71.111	0.051	0.0510	4.17
25.000	0.417	71.107	0.047	0.0470	4.04
26.000	0.433	71.107	0.047	0.0470	3.92
27.000	0.450	71.104	0.044	0.0440	3.81
28.000	0.467	71.104	0.044	0.0440	3.71
29.000	0.483	71.104	0.044	0.0440	3.62
30.000	0.500	71.101	0.041	0.0410	3.53

9313090.0148

AQUIFER TEST SUMMARY

WELL 199-N-77 SLUG INJECTION AND WITHDRAWAL

Purpose of Tests: to estimate aquifer transmissivity or hydraulic conductivity

Hydrogeologic Unit Tested: The uppermost aquifer (Ringold Formation), comprising sandy gravel

Thickness of Aquifer: 30 ft

Depth of Screened or Open Interval Exposed to Aquifer During Test: Screened 98.9 to 88.66 ft below top of casing; Water level remained above the screened interval throughout the test (71.06 ft below top of casing). Tested thickness = 10.3 ft

Diameter of Well Casing: 4 in (0.333 ft)

Diameter of Well Screen: 4 in (0.333 ft)

Diameter of Screen plus Sand Pack: 10 in (0.833 ft)

Porosity of Sand Pack: 0.4

Observation Well(s) Used: None Distance from Pumping Well: N/A

Depth of Screened Interval of Observation Well: N/A

Date of Tests: 18 Nov 92 Start Time of Test: 11:40

Slugging Rod Dimension: 2-in diameter by 6-ft length (0.13 ft^3)

Duration of Test: Injection: 30 min; Withdrawal: 30 min

Water-Level Measurement Methods: pressure transducer with data logger

Maximum Change in Water Level: 1.5 ft

9313090.0449

RESULTS:

Test	Transmissivity (ft^2/d)*	Hydraulic Conductivity (ft/d)
Injection	(360)	35
Withdrawal	(590)	57

* Bouwer and Rice method estimates hydraulic conductivity; Transmissivity was estimated by the equation T=Kb, where b = screened aquifer thickness.

Remarks:

The semilog plots of slug injection and withdrawal data are curved, making it difficult to apply the Bouwer and Rice method. Straight lines were fitted through the earliest-time data for analysis (Figures D-10 and D-11).

9313090.0450

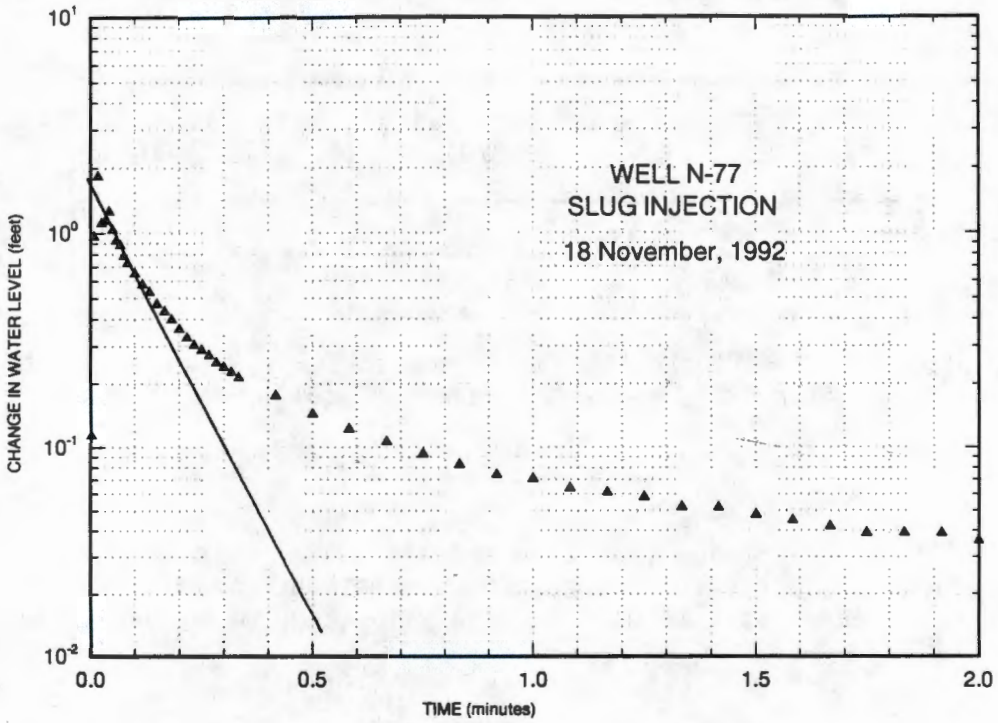

Figure D-10. Well N-77 Slug Injection.

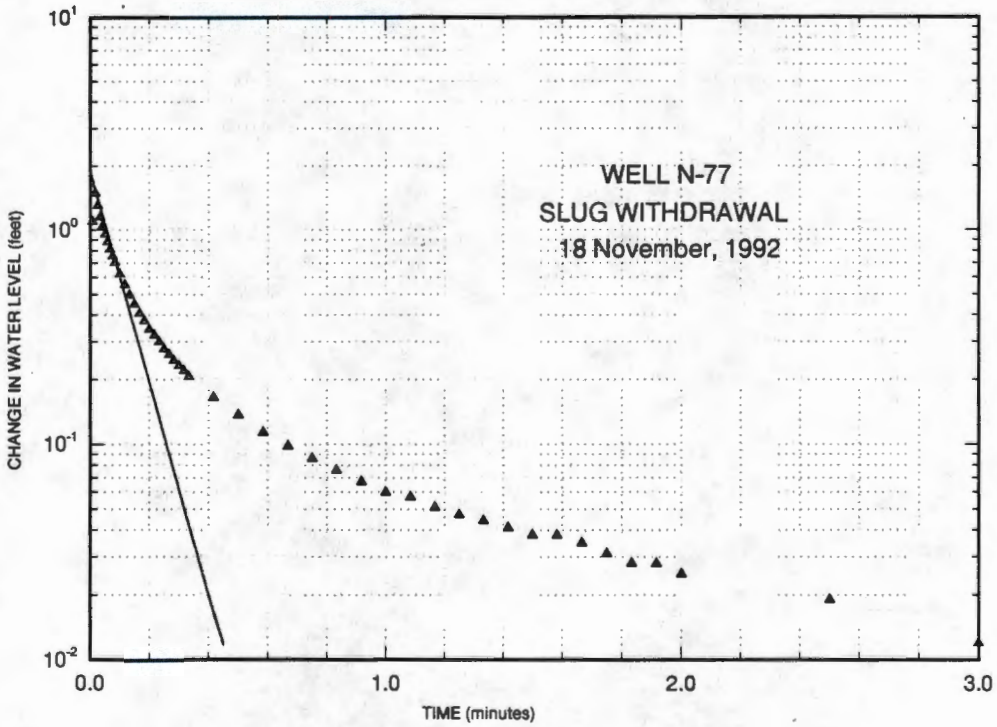

Figure D-11. Well N-77 Slug Withdrawal.

9313090.0451

VALIDATED
OKDR 1/11/93
SIGNATURE/DATE

BOREHOLE TEST INFORMATION

Borehole 199-N-77 Borehole Diameter 4 in. Hanford Coordinates N/A

Interval Tested 98.90'-71.06' Depth Interval (screened) 98.90-88.66' Test Type: Instantaneous Slug

Borehole Depth: 98.90' BTOC Instruction Used: WHC-CM-7-7 (EII 10.1)

EQUIPMENT

NAME	DESCRIPTION	
Electric Sounder	Solinst s/n: ET-5	Calibration due: 1-13-93
Data Logger	In-Situ Inc. s/n: 2K193	
Pressure Transducer	In-Situ Inc. s/n: 1989	Calibration due: 7-9-93
Slugging Rod	Site Fabricated 72.0"Lx2.0"D	0.13 cu. ft.
Steel Measuring Tape	500' Graduated Steel Tape	

MEASUREMENT DATUM

Control Datum: Top of Casing (TOC) 6"

Elevation: N/A

Electric Sounder: TOC 6"

Steel Tape: TOC 6"

Pressure Transducer: TOC 6"

WELL HEAD DIAGRAM

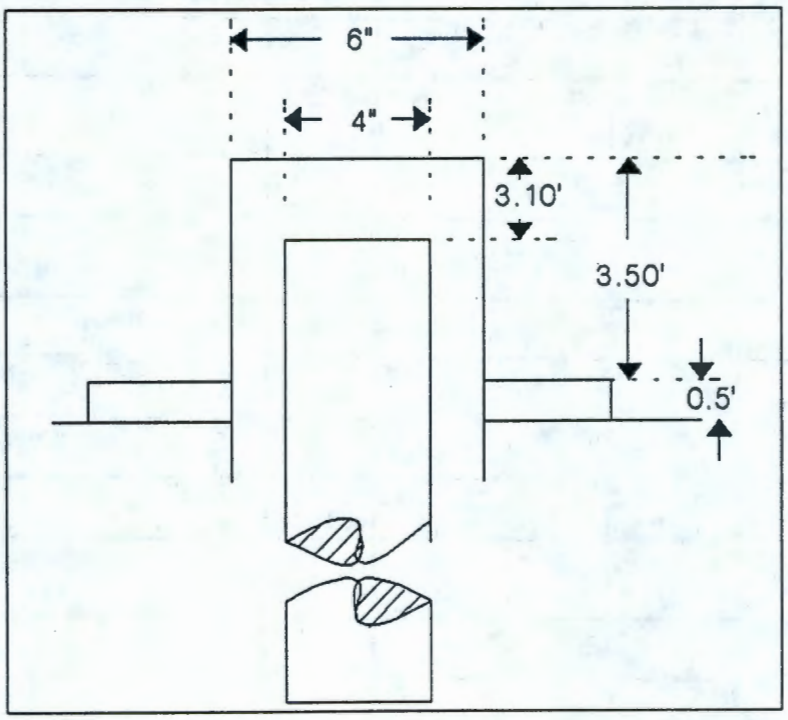

COMMENTS

N.A.

Recorded by: James A. Coates James A. Coates Date: 12-16-92
Sign and Print Name

A-6000-417 (08/89)

9313090.0052

INSTANTANEOUS SLUG TEST DATA SHEET: INJECTION

Borehole: 199-N-77

Interval Tested: 98.90'-71.06" Btoc 6"

Depth To Water: 98.90' Btoc 6"

Depth to Transducer: 16.160' BWL

Measured by: James A. Coates

Slug Volume: 0.13 cu. ft.

Barometric Reading:
Beginning: N/A End: N/A

Time:	Start	End
Baseline	1122	1140
Injection:	1140	1210

Date: 11-18-92

Initial Pressure (Pi): 71.06'

Slug Level/Pressure (Pmax) 69.946'

Borehole Diameter: 4"

Time		Pressure	Time		Pressure	Time		Pressure
Observed	Elapsed	Trans.Measurement	Observed	Elapsed	Trans.Measurement	Observed	Elapsed	Trans.Measurement
		See Attached Data			See Attached Data			

Recorded by: James A. Coates James A. Coates Date: 12-16-92
Sign and Print Name

BD-6000-293(07/90)

9313090.0453

INSTANTANEOUS SLUG TEST DATA SHEET: WITHDRAWAL

Borehole: 199-N-77

Interval Tested: 98.90'-71.06" Btoc 6"

Depth To Water: 98.90' Btoc 6"

Depth to Transducer: 16.160' BWL

Measured by: James A. Coates

Slug Volume: 0.13 cu. ft.

Barometric Reading:

Beginning: N/A End: N/A

Time:	Start	End
Baseline	1122	1140
Withdrawal	1210	1240

Date: 11-18-92

Initial Pressure (Pi): 71.06'

Slug Level/Pressure (Pmax) 72.550'

Borehole Diameter: 4"

Time		Pressure	Time		Pressure	Time		Pressure
Observed	Elapsed	Trans.Measurement	Observed	Elapsed	Trans.Measurement	Observed	Elapsed	Trans.Measurement
		See Attached Data			See Attached Data			

Recorded by: James A. Coates James A. Coates Date: 12-16-92

Sign and Print Name

BD-6000-293(07/90)

9313090.0454

WELL N-77 BASELINE BEFORE SLUG INJECTION

SE2000
Environmental Logger
11/19 10:02

Unit# 193 Test 3

INPUT 1: Level (F) TOC

Reference	71.060
SG	1.000
Linearity	0.000
Scale factor	10.110
Offset	0.000
Delay mSEC	50.000

Step 0 11/18 11:21:53

Time:min	Time:hrs	D-T-W:Ft	d(WL):Ft
0	0.000	71.056	0.004
1	0.017	71.024	0.036
2	0.033	71.008	0.052
3	0.050	71.002	0.058
4	0.067	70.999	0.061
5	0.083	70.996	0.064
6	0.100	70.996	0.064
7	0.117	70.992	0.068
8	0.133	70.992	0.068
9	0.150	70.992	0.068
10	0.167	70.989	0.071
11	0.183	70.989	0.071
12	0.200	70.989	0.071
13	0.217	70.989	0.071
14	0.233	70.989	0.071
15	0.250	70.989	0.071
16	0.267	70.989	0.071
17	0.283	70.986	0.074

9313090.0455

WELL N-77 SLUG INJECTION

SE2000
Environmental Logger
11/19 09:22

Unit# 193 Test 4

INPUT 1: Level (F) TOC

Reference	71.060
SG	1.000
Linearity	0.000
Scale factor	10.110
Offset	0.000
Delay mSEC	50.000

Step 0 11/18 11:40:02

Time:min	Time:hrs	D-T-W:Ft	d(WL):Ft
0.001	0.0000	70.945	0.115
0.008	0.0001	70.092	0.968
0.017	0.0003	69.224	1.836
0.025	0.0004	69.946	1.114
0.033	0.0006	69.917	1.143
0.042	0.0007	69.799	1.261
0.050	0.0008	70.022	1.038
0.058	0.0010	70.134	0.926
0.067	0.0011	70.179	0.881
0.075	0.0013	70.274	0.786
0.083	0.0014	70.332	0.728
0.100	0.0017	70.408	0.652
0.117	0.0019	70.482	0.578
0.133	0.0022	70.526	0.534
0.150	0.0025	70.590	0.470
0.167	0.0028	70.625	0.435
0.183	0.0031	70.661	0.399
0.200	0.0033	70.699	0.361
0.217	0.0036	70.731	0.329
0.233	0.0039	70.756	0.304
0.250	0.0042	70.772	0.288
0.267	0.0044	70.788	0.272
0.283	0.0047	70.807	0.253
0.300	0.0050	70.820	0.240
0.317	0.0053	70.833	0.227
0.333	0.006	70.846	0.214
0.417	0.007	70.884	0.176
0.500	0.008	70.916	0.144
0.583	0.010	70.938	0.122
0.667	0.011	70.954	0.106
0.750	0.013	70.967	0.093
0.833	0.014	70.977	0.083
0.917	0.015	70.986	0.074
1.000	0.017	70.989	0.071

9313090.0456

WELL N-77 SLUG INJECTION

Time:min	Time:hrs	D-T-W:Ft	d(WL):Ft
1.083	0.018	70.996	0.064
1.167	0.019	70.999	0.061
1.250	0.021	71.002	0.058
1.333	0.022	71.008	0.052
1.417	0.024	71.008	0.052
1.500	0.025	71.012	0.048
1.583	0.026	71.015	0.045
1.667	0.028	71.018	0.042
1.750	0.029	71.021	0.039
1.833	0.031	71.021	0.039
1.917	0.032	71.021	0.039
2.000	0.033	71.024	0.036
2.500	0.042	71.031	0.029
3.000	0.050	71.037	0.023
3.500	0.058	71.040	0.020
4.000	0.067	71.044	0.016
4.500	0.075	71.047	0.013
5.000	0.083	71.047	0.013
5.500	0.092	71.047	0.013
6.000	0.100	71.050	0.010
6.500	0.108	71.050	0.010
7.000	0.117	71.050	0.010
7.500	0.125	71.050	0.010
8.000	0.133	71.050	0.010
8.500	0.142	71.053	0.007
9.000	0.150	71.053	0.007
9.500	0.158	71.050	0.010
10.000	0.167	71.053	0.007
11.000	0.183	71.053	0.007
12.000	0.200	71.050	0.010
13.000	0.217	71.050	0.010
14.000	0.233	71.050	0.010
15.000	0.250	71.050	0.010
16.000	0.267	71.050	0.010
17.000	0.283	71.050	0.010
18.000	0.300	71.053	0.007
19.000	0.317	71.053	0.007
20.000	0.333	71.053	0.007
21.000	0.350	71.053	0.007
22.000	0.367	71.053	0.007
23.000	0.383	71.050	0.010
24.000	0.400	71.050	0.010
25.000	0.417	71.050	0.010
26.000	0.433	71.047	0.013
27.000	0.450	71.047	0.013
28.000	0.467	71.047	0.013
29.000	0.483	71.047	0.013
30.000	0.500	71.034	0.026

9313090.0457

WELL N-77 SLUG WITHDRAWAL

11/19 08:48

Unit# 193 Test 5

INPUT 1: Level (F) TOC

Reference	71.060
SG	1.000
Linearity	0.000
Scale factor	10.110
Offset	0.000
Delay mSEC	50.000

Step 0 11/18 12:10:52

Time:min	Time:hrs	D-T-W:Ft	d(WL):Ft
0.008	0.0001	72.157	1.097
0.017	0.0003	72.550	1.490
0.025	0.0004	72.362	1.302
0.033	0.0006	72.209	1.149
0.042	0.0007	72.106	1.046
0.050	0.0008	72.017	0.957
0.058	0.0010	71.940	0.880
0.067	0.0011	71.873	0.813
0.075	0.0013	71.816	0.756
0.083	0.0014	71.765	0.705
0.100	0.0017	71.682	0.622
0.117	0.0019	71.615	0.555
0.133	0.0022	71.557	0.497
0.150	0.0025	71.510	0.450
0.167	0.0028	71.468	0.408
0.183	0.0031	71.436	0.376
0.200	0.0033	71.404	0.344
0.217	0.0036	71.382	0.322
0.233	0.0039	71.360	0.300
0.250	0.0042	71.337	0.277
0.267	0.0044	71.321	0.261
0.283	0.0047	71.305	0.245
0.300	0.0050	71.292	0.232
0.317	0.0053	71.280	0.220
0.333	0.006	71.267	0.207
0.417	0.007	71.225	0.165
0.500	0.008	71.197	0.137
0.583	0.010	71.174	0.114
0.667	0.011	71.158	0.098
0.750	0.013	71.146	0.086
0.833	0.014	71.136	0.076
0.917	0.015	71.127	0.067
1.000	0.017	71.120	0.060
1.083	0.018	71.117	0.057
1.167	0.019	71.111	0.051

9313090.0458

WELL N-77 SLUG WITHDRAWAL

Time:min	Time:hrs	D-T-W:Ft	d(WL):Ft
1.250	0.021	71.107	0.047
1.333	0.022	71.104	0.044
1.417	0.024	71.101	0.041
1.500	0.025	71.098	0.038
1.583	0.026	71.098	0.038
1.667	0.028	71.095	0.035
1.750	0.029	71.091	0.031
1.833	0.031	71.088	0.028
1.917	0.032	71.088	0.028
2.000	0.033	71.085	0.025
2.500	0.042	71.079	0.019
3.000	0.050	71.072	0.012
3.500	0.058	71.069	0.009
4.000	0.067	71.066	0.006
4.500	0.075	71.063	0.003
5.000	0.083	71.063	0.003
5.500	0.092	71.063	0.003
6.000	0.100	71.060	0.000
6.500	0.108	71.060	0.000
7.000	0.117	71.056	-0.004
7.500	0.125	71.056	-0.004
8.000	0.133	71.060	0.000
8.500	0.142	71.056	-0.004
9.000	0.150	71.056	-0.004
9.500	0.158	71.056	-0.004
10.000	0.167	71.056	-0.004
11.000	0.183	71.056	-0.004
12.000	0.200	71.056	-0.004
13.000	0.217	71.056	-0.004
14.000	0.233	71.056	-0.004
15.000	0.250	71.056	-0.004
16.000	0.267	71.056	-0.004
17.000	0.283	71.056	-0.004
18.000	0.300	71.056	-0.004
19.000	0.317	71.056	-0.004
20.000	0.333	71.056	-0.004
21.000	0.350	71.056	-0.004
22.000	0.367	71.056	-0.004
23.000	0.383	71.056	-0.004
24.000	0.400	71.056	-0.004
25.000	0.417	71.056	-0.004
26.000	0.433	71.056	-0.004
27.000	0.450	71.056	-0.004
28.000	0.467	71.056	-0.004
29.000	0.483	71.056	-0.004
30.000	0.500	71.056	-0.004

9313090.0459

WELL N-77 SLUG INJECTION
****
THE BELOW HYDRAULIC CONDUCTIVITY VALUE WAS CALCULATED
USING THE BOUWER AND RICE SLUG TEST METHOD.
SOURCE= "THE BOUWER AND RICE SLUG TEST-AN UPDATE"
GROUND WATER, VOL 27, NO. 3, MAY-JUNE 1989.
****

Rc (ft)	Rw (ft)	Le (ft)	Lw (ft)	H (ft)
0.1670	0.4170	10.3000	27.8000	30.0000

****
Le/Rw = 24.7002400
A= 2.3772210
B= 3.431516E-001
C= 1.8357070
t (min)= 5.000000E-001
1/t= 2.0000000
Yo= (ft) 1.5000000
Yt= (ft) 5.000000E-002
1/t ln(Yo/Yt)= 6.8023950
ln[(H-Lw)/Rw]= 1.6631270
ln(Re/Rw)= 2.6228050
****
K (ft/day) = 34.7821200
****
T OF THE SATURATED SCREEN INTERVAL
(ft2/day)= 358.2558000
****

WELL N-77 SLUG WITHDRAWAL
****
THE BELOW HYDRAULIC CONDUCTIVITY VALUE WAS CALCULATED
USING THE BOUWER AND RICE SLUG TEST METHOD.
SOURCE= "THE BOUWER AND RICE SLUG TEST-AN UPDATE"
GROUND WATER, VOL 27, NO. 3, MAY-JUNE 1989.
****

Rc (ft)	Rw (ft)	Le (ft)	Lw (ft)	H (ft)
0.1670	0.4170	10.3000	27.8000	30.0000

****
Le/Rw = 24.7002400
A= 2.3772210
B= 3.431516E-001
C= 1.8357070
t (min)= 4.000000E-001
1/t= 2.5000000
Yo= (ft) 1.7000000
Yt= (ft) 2.000000E-002
1/t ln(Yo/Yt)= 11.1066300
ln[(H-Lw)/Rw]= 1.6631270
ln(Re/Rw)= 2.6228050
****
K (ft/day) = 56.7906000
****
T OF THE SATURATED SCREEN INTERVAL
(ft2/day)= 584.9432000
****

9313090.0461