This document was too large to scan as a single document. It has been divided into smaller sections.

Section 7 of 13

Document Information			
Document #	RPP-24544	Revision	1D
Title	DEMONSTRATION BULK VITRIFICATION SYS INDEPENDENT QUALIFIED REGISTERED PROFESSIONAL ENGINEER (IQRPE & RCRA DESIGN REVIEW PACKAGE		
Date	05/11/2006		
Originator	SHUFORD DH	ORG CO	CH2M
Recipient		Recipient Co.	
References	ECN-723118-R5, RPP-24544-R0, RPP-24544-R1, RPP-24544-R1A, RPP-24544-R1B, RPP-24544-R1C, EDT-821657, ECN-723118-R0, ECN-723118-R1, ECN-723118-R3, ECN-723118-R4		
Keywords	SUPPL TREATMENT		
Projects			

Appendix C5

0069792
7/13

APPENDIX C5

MAIN OFF-GAS TREATMENT SYSTEM

Drawing or Sketch Number	Revision	Title	Page
F-145579-00-E-0082	C	Bulk Vitrification Fire Detection System Block Diagram	C5-3
F-145579-00-P-0001	E	Bulk Vitrification Typical Pipe Support Details (Sht 1 of 4)	C5-4
F-145579-00-P-0002	E	Bulk Vitrification Typical Pipe Support Details (Sht 2 of 4)	C5-5
F-145579-00-P-0003	E	Bulk Vitrification Typical Pipe Support Details (Sht 3 of 4)	C5-6
F-145579-00-P-0004	E	Bulk Vitrification Typical Pipe Support Details (Sht 4 of 4)	C5-7
F-145579-36-V-0001	H	Bulk Vitrification Off-Gas Treatment Plot Plan	C5-8
F-145579-36-V-0002	H	Bulk Vitrification Off-Gas Treatment Waste Receipt Area Plan	C5-9
F-145579-36-V-0003	K	Bulk Vitrification Off-Gas Treatment Melt & Dryer Lower Plan	C5-10
F-145579-36-V-0004	J	Bulk Vitrification Off-Gas Treatment Melt & Dryer Middle Plan	C5-11
F-145579-36-V-0005	H	Bulk Vitrification Off-Gas Treatment Melt and Dryer Upper Plan	C5-12
F-145579-36-V-0006	H	Bulk Vitrification Off-Gas Treatment Wet Scrubber Skid Plan	C5-13
F-145579-36-V-0007	H	Bulk Vitrification Off-Gas Treatment Scrub & Stack Plan	C5-14
F-145579-36-V-0008	H	Bulk Vitrification Off-Gas Treatment Secondary Waste Area Plan	C5-15
F-145579-36-V-0016	G	Bulk Vitrification Sintered Metal Filters Details	C5-16
F-145579-36-V-0019	E	Bulk Vitrification Off-Gas Treatment SCR & Ammonia Feed Details	C5-17
F-145579-36-V-0023	E	Bulk Vitrification Off-Gas Treatment Standard Details – Sht. 1	C5-18
F-145579-36-V-0024	F	Bulk Vitrification Off-Gas Treatment Duct Support Details	C5-19
F-145579-36-V-0025	G	Bulk Vitrification Off-Gas Treatment Overall Section	C5-20
F-145579-36-V-0026	F	Bulk Vitrification Off-Gas Treatment Waste Receipt Area Section 'A'	C5-21
F-145579-36-V-0027	H	Bulk Vitrification Off-Gas Treatment Melt & Dryer Sections A & B	C5-22
F-145579-36-V-0028	K	Bulk Vitrification Off-Gas Treatment Melt & Dryer Section 'C'	C5-23
F-145579-36-V-0029	J	Bulk Vitrification Off-Gas Treatment Melt & Dryer Section 'D'	C5-24
F-145579-36-V-0030	J	Bulk Vitrification Off-Gas Treatment Melt & Dryer Section 'E'	C5-25
F-145579-36-V-0031	G	Bulk Vitrification Off-Gas Treatment Wet Scrubber Skid Sections	C5-26
F-145579-36-V-0033	H	Bulk Vitrification Off-Gas Treatment Scrub & Stack Section	C5-27
F-145579-36-V-0034	H	Bulk Vitrification Off-Gas Treatment Scrub & Stack Sections	C5-28

Drawing or Sketch Number	Revision	Title	Page
F-145579-36-V-0035	G	Bulk Vitrification Off-Gas Treatment Secondary Waste Area Section 'A'	C5-29
F-145579-36-V-0037	B	Bulk Vitrification Off-Gas Treatment Wet Scrubber Skid Sections	C5-30
H-14-106795	1	Bulk Vitrification Tri-Mer Scrubber Foundation - Plan & Details	C5-31
ECN 722545	0	ECN to Drawing H-14-106795, Sheet 1, Revision 1	C5-32
H-14-106796	0	Bulk Vitrification Off-Gas Area Fdns - Plans & Sections	C5-36
H-14-106798	0	Bulk Vitrification Minor Foundations General Arrangement	C5-37
H-14-106800	0	Bulk Vitrification Miscellaneous Foundations Plans & Details	C5-38
ECN 723832	0	ECN to Drawing H-14-106796, Sheet 1, Revision 0	C5-39

In making requests for transmittal of data by any electronic media, the Company receiving such data agrees that AMEC Americas Limited cannot be held responsible for users of the data outside of or beyond the scope of our original agreement. Also, because data stored in electronic media or transmitted by electronic means can deteriorate undetected or be modified without the consultant's knowledge, the Company receiving data agrees that AMEC Americas Limited cannot be held liable for the compatibility, completeness or correctness of the data.

TYPE OF CIRCUIT	ALPHA-NUMERIC IDENTIFIER
STROBE/HORN	B1-* B1-*
FACP TO DETECTOR	1A1 1A2
FACP TO RFAR TROUBLE CIRCUIT	TR TR
FACP TO RFAR ZONE CIRCUITS	Z1+ Z1-
FACP TO BATTERY	BAT+ BAT-
POWER PANEL TO FACP AND RFAR	H N G

WIRE NUMBERING TABLE
(NOTE 2)

B1-* — CIRCUIT # / TERMINAL #
1A2 — ZONE # / TERMINAL #
Z1+ — ZONE #

SYMBOL	DESCRIPTION
	AUTOMATIC HEAT DETECTOR COMBINATION 190°F FIXED TEMP./ RATE COMPENSATED
	VENDOR SUPPLIED DETECTOR FOR MIST SUPPRESSION SYSTEM. (TYPE TO BE ADVISED)
F	FIRE ALARM MANUAL PULL STATION
F	FIRE ALARM COMBINATION STROBE/HORN
	END OF LINE RESISTOR
	MIST SYSTEM NOZZLE

NOTE:

1. ZONE 1 RESERVED.
2. FOR DETAILED DESCRIPTION OF WIRE IDENTIFICATION STANDARDS, REFER TO TCF-ESHQ-FP-STD-02, REV. A

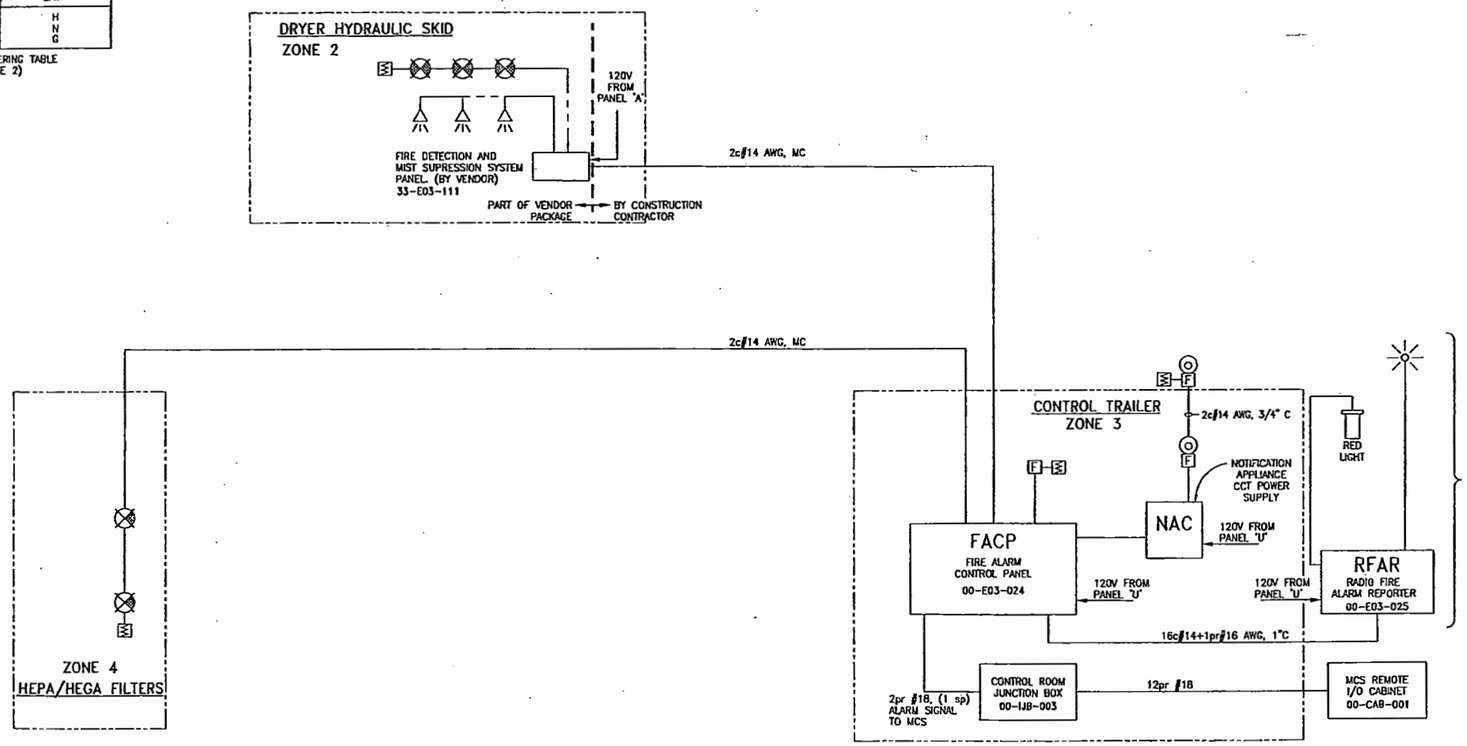

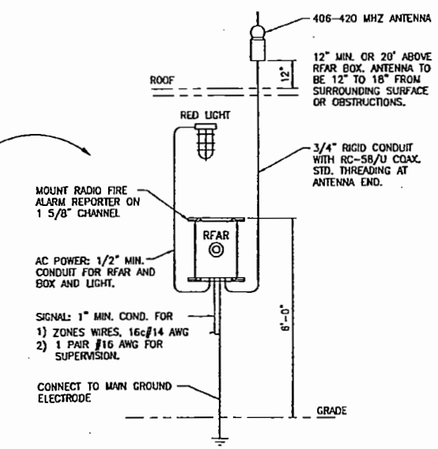

TYPICAL RFAR BOX INSTALLATION DETAIL

Rev.	REVISION DESCRIPTION	Date	By	Chk'd	Appr'd	Appr'd Cust Rep
C	ISSUED FOR CH2M REVIEW & 90% REPORT	30 Mar 05	MV	JDM	JTA	TH
B	ISSUED FOR INTERNAL APPROVAL	14 Feb 05	MV	JDM	JTA	TH
A	ISSUED FOR INTERNAL REVIEW	4 Feb 05	MV	DMJ	DMJ	TH

AMEC DRAWING NO: F-145579-00-E-0082 REV: C

amec

AMEC PROJECT: 145579-FINAL DBVS DESIGN

U.S. DEPARTMENT OF ENERGY
Office of River Protection

BULK VITRIFICATION
FIRE DETECTION SYSTEM
BLOCK DIAGRAM

NAME	DATE	COMPANY
DRAWN BY		
REVIEWED BY		
ENGINEERED BY		
DISCIP / AREA LEAD		
ENGINEERING MANAGER		
PROJECT MANAGER		
DESIGN AUTHORITY		

SIZE F | BLDG NO | PROCS NO | DWG NO | REV
SCALE | EST | SHEET | OF

DWG NO	TITLE
DRAWING TRACEABILITY LIST	

REF NUMBER	TITLE
REFERENCES	
NEXT USED ON	

REV NO	REV DATE	DESCRIPTION	REV BY DATE	REV BY	CHECKED BY	CHCK	COMPANY
REVISIONS							

SYMBOLS KEYPLAN

RESTRAINT TYPE	SUPPORT SYMBOL
PIPE ANCHOR (VERT. OR HORIZ. PIPE)	A
BASE SUPPORT GUIDE	BS
BASE SUPPORT, CLAMPED GUIDE	BSCG
CLAMPED GUIDE (VERT. OR HORIZ. PIPE)	CG
CLAMPED SHOE	CS
CLAMPED SHOED GUIDE	CSG
DUMMY SUPPORT	DS
FIELD SUPPORT	FS
GUIDE NO SHOE	GNS
PIPE HANGER	H
RISER CLAMP	RC
RISER GUIDE	RG
PIPE SHOE	S
SHOED GUIDE (VERT. OR HORIZ. PIPE)	SG
PIPE SUPPORT	PS
PIPE PICK-UP	PU

PIPE LINE SUPPORT SPANS

PIPE SIZE (INCHES)	WATER STD. W.	AIR STD. W.	SINGLE ROD (INCHES)	DOUBLE ROD (INCHES)	SINGLE ROD MAX LOAD
1	7	9	3/8	3/8	610
1 1/2	9	12	3/8	3/8	610
2	10	13	3/8	3/8	610
2 1/2	11	14	1/2	3/8	1130
3	12	15	1/2	3/8	1130
4	14	17	5/8	1/2	1810
6	17	21	3/4	5/8	2710
8	19	24	7/8	3/4	3770
10	22	28	7/8	3/4	3770
12	23	30	7/8	3/4	3770
14	25	32	1	7/8	4960
16	27	35	1	7/8	4960
18	28	37	1 1/8	1	6230
20	30	39	1 1/4	1 1/8	8000
24	32	42	1 1/2	1 1/4	11630
30	33	44	1 3/4	1 1/2	15700
36	40	48	2 1/4	2	27200

NOTES:-

1. SUPPORT SPANS ARE MEASURED IN FEET; LOADS IN POUNDS.
2. WHEN CONCENTRATED LOADS SUCH AS FLANGES, VALVES, AND IN-LINE EQUIPMENT ARE PRESENT, THE SUPPORT SPAN AND ROD SIZE SHALL BE DETERMINED ON AN INDIVIDUAL BASIS.

PIPE GUIDE SPACING TABLE

LINE SIZE	HORIZONTAL RUN	VERTICAL RUN (FOR STRUCT. ONLY)
1"ø-3"ø	APPROX. 40'-0" APART (MAX.)	APPROX. 30'-0" APART (MAX.)
4"ø&6"ø	APPROX. 60'-0" APART (MAX.)	APPROX. 40'-0" APART (MAX.)
8"ø&10"ø	APPROX. 80'-0" APART (MAX.)	APPROX. 40'-0" APART (MAX.)
12"ø-16"ø	APPROX. 100'-0" APART (MAX.)	APPROX. 50'-0" APART (MAX.)
18"ø & LARGER	APPROX. 120'-0" APART (MAX.)	APPROX. 60'-0" APART (MAX.)

GUIDES

PIPING PLAN

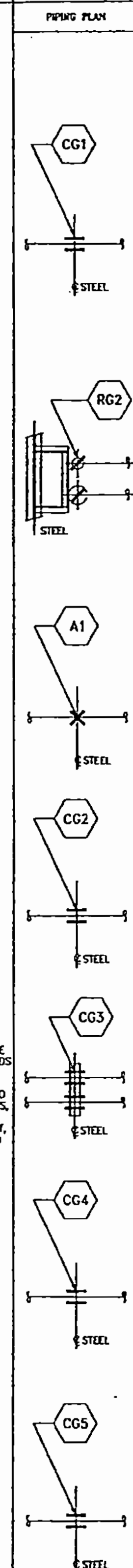

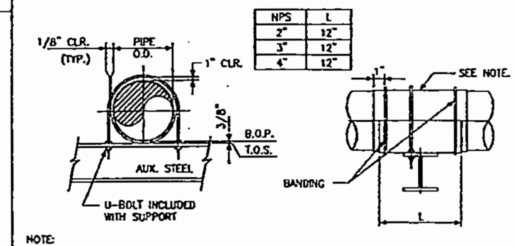

NPS	L
2"	12"
3"	12"
4"	12"

NOTE:
1/8" THICK WOVEN NON-ASBESTOS LINING STYLE GARLOCK 6050 OR EQUAL

CG1

CLAMPED GUIDE
JOVE NO. FS-7 OR EQUAL

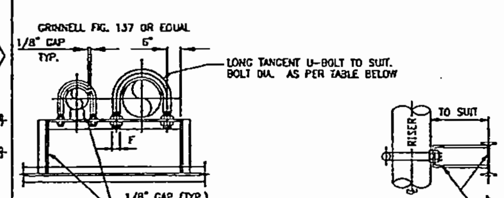

STEEL SIZE AS SPEC. ON DWG. F-145579-00-P-0004 TABLE "S". IN MULTIPLE PIPE APPLICATIONS WHERE PIPE SIZES DIFFER, SPACE STEEL TO SUIT LARGEST PIPE DIA. AND FIT OTHERS WITH SPACING PADS

NOTE: PROVIDE GUIDE WEBS IF PIPE IS INSULATED, AS PER DETAIL BELOW; WEBS TO BE PERPENDICULAR AND PARALLEL TO FRAME

NOM. PIPE DIA. "D"	BOLT DIA. "F"	CAPACITY IN LBS. @ 650° F
3/4	3/8	1200
1	3/8	1200
1 1/2	3/8	1200
2	3/8	1200
2 1/2	3/8	2260
3	1/2	2260
4	1/2	2260
5	1/2	2260
6	5/8	3620
8	5/8	3620
10	3/4	5420
12	7/8	7540
14	7/8	7540
16	7/8	7540
18	1	9920
20	1	9920
22	1	9920
24	1	9920

RG1 SINGLE PIPE RISER GUIDE

RG2 MULTI-PIPE RISER GUIDE

NOTE:

1. UNLESS SPECIFIED OTHERWISE, U-BOLTS ARE GENERALLY USED AS GUIDES. WHERE SPECIFIED AS ANCHORS ON PIPE SUPPORT DRAWING, U-BOLTS TO BE FIT TIGHT
2. FOR INSULATED LINES WITH GUIDE WEBS, USE OVERSIZE U-BOLTS TO SUIT GUIDE WEBS WITH GAP. WEBS TO BE AS PER DETAIL BELOW, EXCEPT GUIDE WEBS TO BE PARALLEL AND/OR PERPENDICULAR TO STEEL. NOT AT 45°.

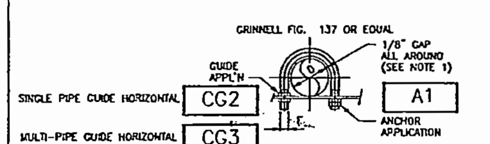

SINGLE PIPE GUIDE HORIZONTAL CG2

MULTI-PIPE GUIDE HORIZONTAL CG3

A1

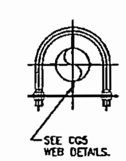

PIPE DIA. "D"	S	T
2"-3"	6"	3/8"
4"-8"	8"	1/2"
10"-16"	12"	3/4"

CG4

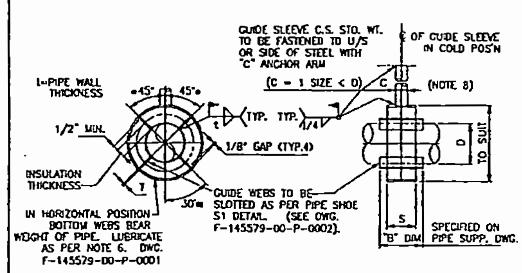

WEB DETAIL FOR VERT./HORIZ. PIPES

(* WEB ANGLE = 45° FOR RISER)
(* BOTTOM WEB ANGLE = 30° FOR HORIZ. PIPE)

NOTE: U-BOLT MAY BE USED INSTEAD OF GUIDE SLEEVE.

CG5

GUIDES

PIPING PLAN

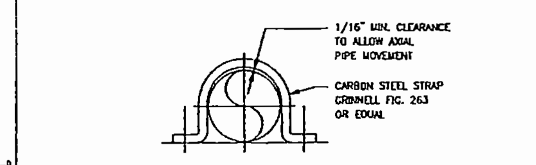

CG6

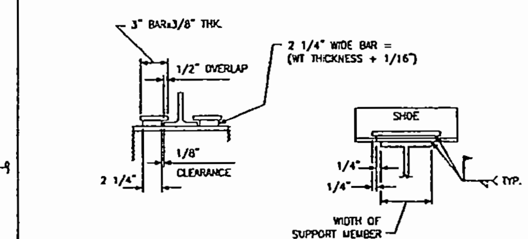

SG1

INSULATION SHOE GUIDE

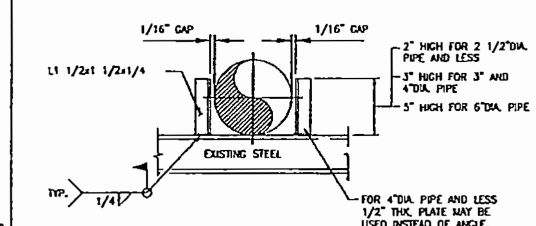

GNS1

ANGLE GUIDE FOR 6" DIA. AND LESS

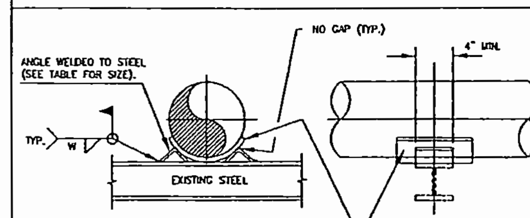

150' REINFORCING WEAR PAD IF SPECIFIED
(SEE DWG. F-145579-00-P-0003 ITEM 69)

PIPE SIZE	ANGLE	W
2-1/2" & LESS	1 1/2x1 1/2x1/4	3/16
3" - 4"	1 1/2x1 1/2x1/4	3/16
6" - 8"	2x2x1/4	3/16
10" - 12"	3x3x5/16	1/4
14" - 18"	4x4x3/8	1/4
20"	6x6x1/2	1/4
24" & UP	8x8x5/8	3/8

GNS2

ANGLE GUIDE

In making requests for transmittal of data by any electronic media, the Company receiving such data agrees that AMEC Americas Limited cannot be held responsible for users of the data outside of or beyond the scope of our original agreement. Also, because data stored in electronic media or transmitted by electronic means can deteriorate undetected or be modified without the consultant's knowledge, the Company receiving data agrees that AMEC Americas Limited cannot be held liable for the compatibility, completeness or correctness of the data.

BASE SUPPORTS

PIPING PLAN

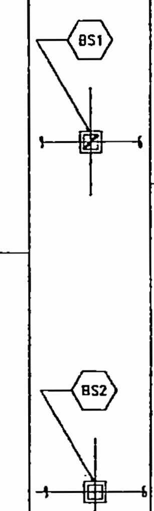

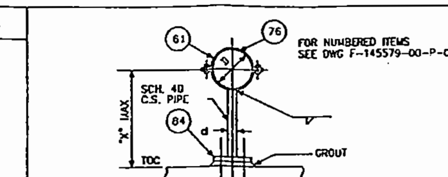

PIPE SIZE "D"	"X"	d
3" & 4"	66"	2"
6" & 8"	60"	3"
10" & 12"	54"	3"
14" & 16"	48"	4"
18" - 24"	42"	4"

BS1 AS SHOWN

BS6 HANG DOWN FROM CONCRETE ABOVE

PIPE SIZE "D"	"X"	CHANNEL SIZE	d
3"& 4"	12"	3X6	2"
6"& 8"	12"	4X7.25	3"
10"& 12"	16"	6X10.5	4"
14"& 16"	24"	8X11.5	6"
18"& 20"	28"	10X20	8"

PIPE SIZE "D"	"X"	CHANNEL SIZE	d
3"& 4"	5"	3X6	2"
6"& 8"	5"	4X7.25	3"
10"& 12"	8"	6X10.5	4"
14"& 16"	12"	8X11.5	6"
18"& 20"	14"	10X20	8"

PIPE SIZE "D"	"X"	CHANNEL SIZE	d
3"& 4"	12"	3X6	2"
6"& 8"	12"	4X7.25	3"
10"& 12"	16"	6X10.5	4"
14"& 16"	24"	8X11.5	6"
18"& 20"	28"	10X20	8"

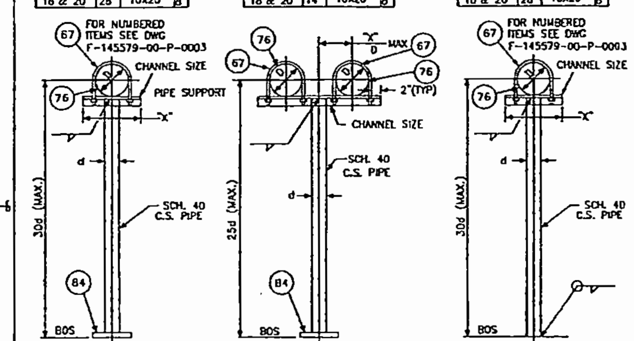

BS2

BS3

BS4 AS SHOWN

BS5 HANG DOWN FROM STEEL ABOVE

GENERAL NOTES UNLESS OTHERWISE NOTED

1. ALL HOLES FOR SUPPORTS AND ANCHORS TO BE DRILLED THROUGH ON SITE.
2. PIPE SUPPORTS FOR FIELD RUN SMALLBORE PIPEWORK TO BE LOCATED TO SUIT ON SITE.
3. THIS DRAWING TO BE USED FOR SUPPORT SELECTION AND APPLICATION ONLY.
4. SUPPORTS TO BE SIZED TO SUIT PIPE DIAMETERS.
5. PIPE SUPPORTS WILL BE SHOWN ON PIPING PLANS OR PIPING SECTIONS INDICATED BY HEXAGONS AS PER EXAMPLES BELOW:

   EXAMPLE: H1 1/2 (PIPE HANGER) — SYMBOL: H1 / 1/2
   WHERE, 1/2 = 1/2" ø ROD

   EXAMPLE: PU1 (PIPE SUPPORT) — SYMBOL: PU1 / 3
   WHERE, PU1 = INDICATES TYPE OF PICK-UP
   3 = SIZE DESIGNATION NUMBER
   ON TABLE S DWG F-145579-00-P-0004

   EXAMPLE: SG1 (SHOED GUIDES) — SYMBOL: SG1 / FS5
   WHERE, SG1 = TYPE OF SHOE/GUIDE
   FS5 = TYPE OF FIELD SUPPORT

6. CARBON STEEL WEAR PLATES, PIPE SHOES AND STRUCTURAL STEEL MEMBERS USED AS SLIDING SUPPORTS SHALL HAVE ALL RUST AND SCALE REMOVED.
   AFTER REMOVING THE RUST AND SCALE, BOTH SLIDING SURFACES SHALL BE CLEANED WITH "PERCHLOROETHYLENE" OR "TRICHLOROETHYLENE" AND COATED WITH MOLYLUBE "SPRAYCOTE" (BELL- RAY Co. INC. FARMINGDALE N.J) OR EQUAL.
   FIELD TO CHECK ALL SLIDING SUPPORTS FOR CONTACT SHIM IF OR AS REQUIRED TACK WELD SHIMS.
7. ALL WELDING TO STRUCTURAL STEEL FOR FIELD SUPPORTED PIPES TO BE APPROVED BY STRUCTURAL ENGINEER.
8. LENGTH OF SUPPORT RODS FOR FIELD SUPPORTED PIPES TO BE APPROVED BY FIELD ENGINEER.

Rev.	REVISION DESCRIPTION	Date	By	Chk'd	Approved Design Lead	Approved Proj. Mgr
E	ISSUED FOR CH2M APPROVAL AND 90% DESIGN REPORT	16 MAR 06	THB	JM	JL	JJ
D	ISSUED FOR DESIGN	16 DEC 2005	RRB		FWS	JDS
C	ISSUED FOR CH2M HILL REVIEW/90% REPORT	08 FEB 2005	CC	LE	FWS	TH
B	ISSUED FOR INTERNAL APPROVAL	10 NOV 2004	CC	LE	CJ	TH
A	ISSUED FOR INTERNAL REVIEW	01 NOV 2004	CC	LE	FWS	JDS

AMEC DRAWING NO: F-145579-00-P-0001 — REV: E

amec

AMEC PROJECT: 145579-FINAL DBVS DESIGN

NAME — DRAWN BY: CC — SEPT 2004 — AMEC

U.S. DEPARTMENT OF ENERGY
Office of River Protection

BULK VITRIFICATION
TYPICAL PIPE SUPPORT
DETAILS — SHT 1 OF 4

SIZE: F — SCALE: NTS

DWG NO — TITLE — DRAWING TRACEABILITY LIST

REF NUMBER — TITLE — REFERENCES

NEXT USED ON

REVISIONS

In making requests for transmittal of data by any electronic media, the Company receiving such data agrees that AMEC Americas Limited cannot be held responsible for users of the data outside of or beyond the scope of our original agreement. Also, because data stored in electronic media or transmitted by electronic means can deteriorate undetected or be modified without the consultant's knowledge, the Company receiving data agrees that AMEC Americas Limited cannot be held liable for the compatibility, completeness or correctness of the data.

DUMMY SUPPORTS

PIPING PLAN

DS1

STEEL

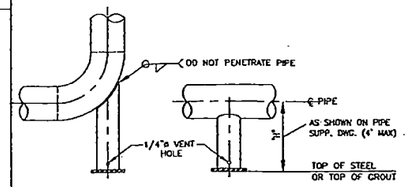

TAG No.	LINE SIZE	STUB SIZE	BASE PLATE
DS-1	2-4	2" SCH. 40	6 x 6 x 3/8
DS-2	4-8	3" SCH. 40	8 x 8 x 3/8
DS-3	6-10	4" SCH. 40	8 x 8 x 3/8
DS-4	8-18	6" SCH. 40	10 x 10 x 3/8

DS1
DUMMY SUPPORT

DS2

STEEL

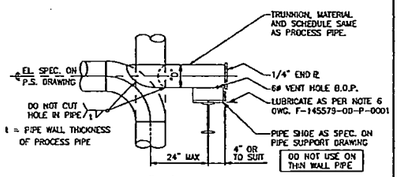

DS2
TRUNNION / DUMMY SUPPORT

CLAMPS

RC1

STEEL

RISER CLAMP
GRINNELL FIG. 261 OR EQUAL (TIGHT-FIT AND STITCH WELD)

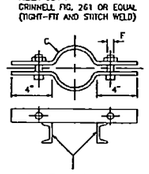

IF RISER CLAMP DOES NOT ADEQUATELY ENGAGE WITH FLOOR OPENING, PROVIDE 2 CHANNELS C4x7.25 OR AS SPECIFIED ON PIPE SUPPORT DRAWING

NOM. PIPE DIAMETER	BOLT DIA. F	CLAMP STOCK G	CAPACITY lbs.
3/4"	3/8	3/16 x 1	220
1"	3/8	3/16 x 1	220
1 1/2"	3/8	3/16 x 1	250
2"	7/16	3/16 x 1	300
2 1/2"	7/16	1/4 x 1	400
3"	7/16	1/4 x 1	500
4"	1/2	1/4 x 1	750
5"	1/2	1/4 x 1 1/2	1500
6"	1/2	1/4 x 1 1/2	1600
8"	5/8	3/8 x 1 1/2	2500
10"	5/8	3/8 x 2	2500
12"	5/8	1/2 x 2	2700

RC1
RISER CLAMP

ANCHORS

A2

STEEL

WELD BEAM SECTION TO PIPE & BASE PLATE (1/4" FILLET CONTINUOUSLY ALL AROUND).

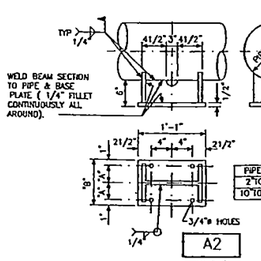

PIPE SIZE	"A"	"B"	"C"
2"TO 8"	2"	6"	W10X5.75x22
10"TO 36"	3.5	9"	W12x8x40

A2
ANCHOR

SHOES

PIPING PLAN

S1

STEEL

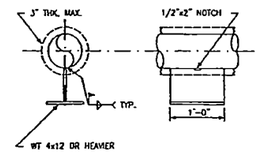

S1
4" INSULATION SHOE FOR 10" PIPE & SMALLER

CLAMPED SHOE

CS1

STEEL

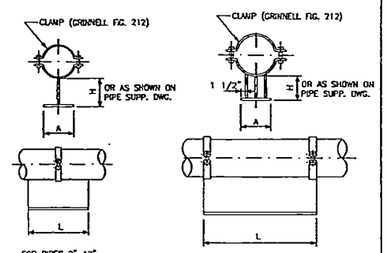

PIPE SIZE	DIMENSIONS A	H	L	BASE
2"	4	4	8	SPLIT W8x15
3"	4	4	8	SPLIT W8x15
4"	4	4	8	SPLIT W8x15
6"	4	4	8	SPLIT W8x15
8"	6 1/2	4	12	SPLIT W8x24
10"	6 1/2	4	12	SPLIT W8x24
12"	6 1/2	4	12	SPLIT W8x24
14"	9	4	12	3/8 PLATE
16"	9	4	12	3/8 PLATE
18"	9	4	12	3/8 PLATE
20"	12	4	12	3/8 PLATE
24"	12	4	12	3/8 PLATE

CS1
CLAMPED SHOE
(MAX TEMP 220F)

ANCHORS

A3

STEEL

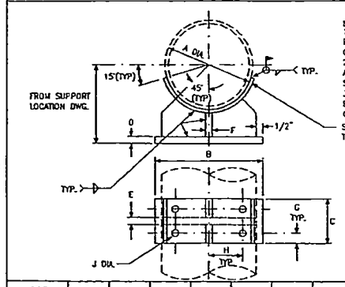

NOTE:
1. ALL CONTINUOUS FILLET WELD CONSTRUCTION.
2. MATERIAL TO BE ASTM A36 CARBON STEEL.
3. SADDLE TO BE BENT TO ACTUAL O.D. OF PIPE.
SADDLE SAME THICKNESS AS PIPE

A3
ANCHOR SADDLE

PIPE SIZE A	NO. HOLES	B	C	D	E	F	G	H	J
2 1/2"	2	4"	6"	1/4"	1/4"	1/4"	1"	1"	3/8"
3"	2	4"	6"	1/4"	1/4"	1/4"	1"	1"	3/8"
4"	2	5"	8"	1/4"	1/4"	1/4"	1"	11/2"	1/2"
6"	2	7"	8"	1/4"	1/4"	1/4"	1"	2"	1/2"
8"	4	9"	8"	3/8"	3/8"	3/8"	1"	3"	5/8"
10"	4	11"	8"	3/8"	3/8"	3/8"	11/2"	4"	1/2"

PIPE SUPPORTS

PIPING PLAN

PS1

STEEL

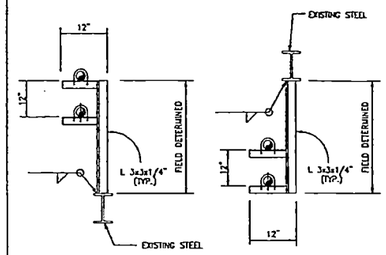

PS1 PS4

PS2

STEEL

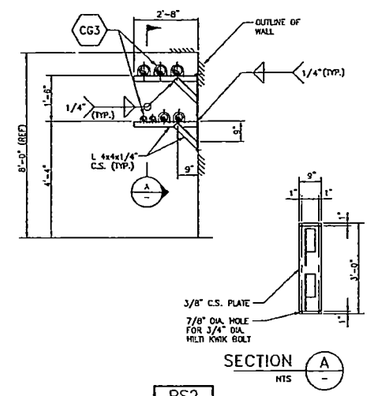

PS2

PS3

STEEL

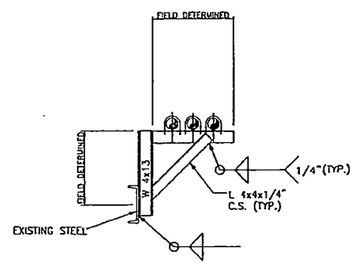

PS3

PICK-UPS

PIPING PLAN

PU1

STEEL

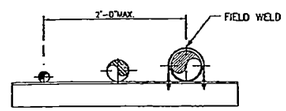

PU1

PU2

STEEL

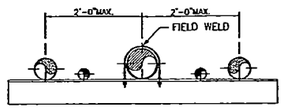

PU2

PU3

STEEL

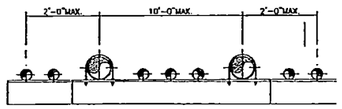

PU3

Rev.	REVISION DESCRIPTION	Date	By	CHK'd	Responsible Design Leader	Responsible Proj Eng	REV
E	ISSUED FOR CH2M APPROVAL AND 90% DESIGN REPORT	16 MAR 06	THB	JJ	JL	JJ	
D	ISSUED FOR DESIGN	16 DEC 2005	RRB		FWS	JOS	
C	ISSUED FOR CH2M HILL REVIEW/90% REPORT	08 FEB 2005	CC	LE	FWS	TH	
B	ISSUED FOR INTERNAL APPROVAL	10 NOV 2004	CC	LE	CJ	TH	
A	ISSUED FOR INTERNAL REVIEW	01 NOV 2004	CC	LE	FWS	JOS	

AMEC DRAWING NO. F-145579-00-P-0002 REV E

amec

AMEC PROJECT: 145579-FINAL DBVS DESIGN

	NAME	DATE	COMPANY
DESIGN BY	CC		AMEC
CHECKED BY			
APPROVED BY			
DESIGN ENG LEAD			
ENGINEERING MANAGER			
PROJECT MANAGER			
DESIGN AUTHORITY			

U.S. DEPARTMENT OF ENERGY
Office of River Protection

BULK VITRIFICATION
TYPICAL PIPE SUPPORT DETAILS SHT 2 OF 4

SIZE F | BLDG NO | INDEX NO | DWG NO | REV
SCALE NTS | SYM | SHEET | OF

DWG NO	TITLE	REF NUMBER	TITLE
DRAWING TRACEABILITY LIST		NEXT USED ON	REFERENCES

NTS	REV NO	DESCRIPTION	REV DATE	REV BY	CHECKED BY	CHK'D	COMPANY
		REVISIONS					

In making requests for transmittal of data by any electronic media, the Company receiving such data agrees that AMEC Americas Limited cannot be held responsible for users of the data outside of or beyond the scope of our original agreement. Also, because data stored in electronic media or transmitted by electronic means can deteriorate undetected or be modified without the consultant's knowledge, the Company receiving data agrees that AMEC Americas Limited cannot be held liable for the compatibility, completeness or correctness of the data.

HANGERS

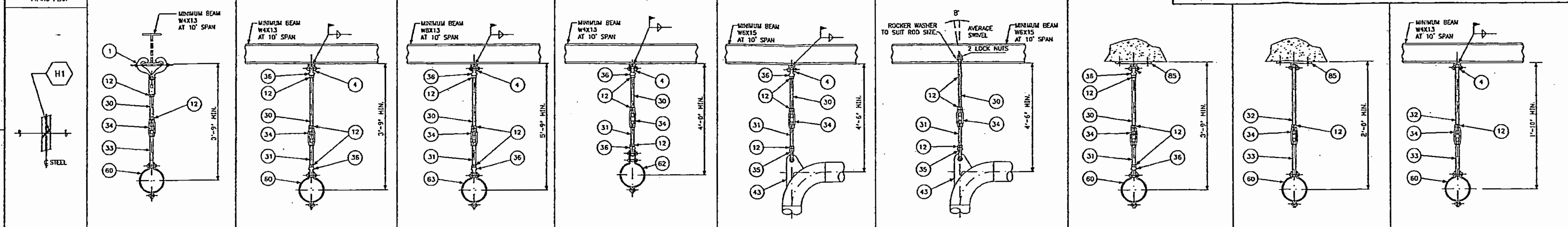

H1 — NOTES: 1. DO NOT USE FOR PIPE LARGER THAN 6"ø.

H2 — NOTES: 1. DO NOT USE FOR PIPE LARGER THAN 6"ø.

H3 — NOTES: 1. USE FOR 10"ø AND LARGER.

H4 — NOTES: 1. DO NOT USE FOR PIPE LARGER THAN 6"ø.

H5 — NOTES: 1. DO NOT USE FOR PIPE LARGER THAN 6"ø.

H6 — NOTES: 1. DO NOT USE FOR PIPE LARGER THAN 6"ø.

H7 — NOTES: 1. DO NOT USE FOR PIPE LARGER THAN 6"ø.

H8 — NOTES: 1. DO NOT USE FOR PIPE LARGER THAN 6"ø.

H9 — NOTES: 1. DO NOT USE FOR PIPE LARGER THAN 6"ø.

DETAILS

ITEM 1

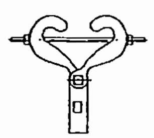

USE ON PIPE 6"ø AND SMALLER
MAL. IRON BEAM CLAMP
GRINNELL NO. 218 OR EQUAL

ITEM 4

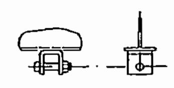

(WITH BOLT & NUT FOR 1"ø ROD & SMALLER WITH PIN & COTTER PIN FOR 1 1/8"ø ROD & LARGER.)
WELDED BEAM ATTACHMENT
GRINNELL NO. 66 OR EQUAL

ITEM 12

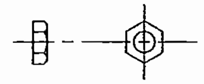

CARBON STEEL NUT,
HEAVY HEXAGONAL SERIES TO ANSI B18.2.2; MAT'L PER ASTM A194 GR. 1 OR 2 ORASTM A563 GR. B.

ITEM 30

R. H. THREADS

MACHINE THREADED ROD
GRINNELL NO. 140 OR EQUAL

ITEM 31

R.H. & L.H. THREADS

MACHINE THREADED ROD
GRINNELL NO. 253 OR EQUAL

ITEM 32

R. H. THREADS

RIGHT HAND THREADED
WELDED EYE ROD
GRINNELL NO. 278 OR EQUAL

ITEM 33

L. H. THREADS

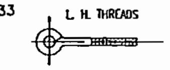

LEFT HAND THREADED
WELDED EYE ROD
GRINNELL NO. 278L OR EQUAL

ALLOWABLE LOADS (LBS) FOR THREADED RODS & WELDED EYE RODS "GRINNELL" FIG. 140,253,278 & 278L	
ROD SIZE ø	TEMPERATURE @ 650°C
3/8	610
1/2	1130
5/8	1810
3/4	2710
7/8	3770
1	4960
1 1/4	8000
1 1/2	11630
1 3/4	15700
2	20700
2 1/4	27200
2 1/2	33500

ITEM 34

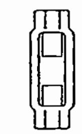

FORGED STEEL TURNBUCKLE
GRINNELL NO. 230 OR EQUAL

ITEM 35

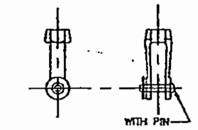

FORGED STEEL CLEVIS
GRINNELL NO. 299 OR EQUAL

ITEM 36

RIGHT HAND THREADED
WELDED EYE NUT
GRINNELL NO. 290 OR EQUAL

ITEM 37

LEFT HANDED THREADED
WELDED EYE NUT
GRINNELL NO. 290L OR EQUAL

FIG 38 FIG 39 ITEM 84

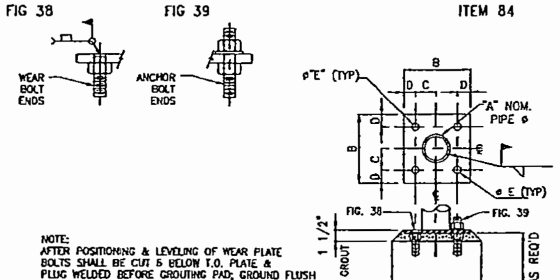

NOTE:
AFTER POSITIONING & LEVELING OF WEAR PLATE BOLTS SHALL BE CUT 5 BELOW T.O. PLATE & PLUG WELDED BEFORE GROUTING PAD; GROUND FLUSH WITH PLATE SURFACE.

"A" LOAD COL. SIZE	B	C	D	E	ANCHOR BOLT SIZE	BASE PLATE THICKNESS
2"	6"	1 3/4"	1 1/4"	1"	3/4"	3/8"
2 1/2"	7"	2 1/4"	1 1/4"	1"	3/4"	1/2"
3"	7"	2 1/4"	1 1/4"	1"	3/4"	1/2"
4"	9"	3"	1 1/2"	1"	3/4"	1/2"
6"	11"	4"	1 1/2"	1"	3/4"	1/2"
8"	1'-2"	5"	2"	1 1/8"	7/8"	3/4"
10"	1'-3"	5 1/2"	2"	1 1/8"	7/8"	3/4"

ITEM 43

NOTE: LUG MATERIAL TO MATCH PIPE.

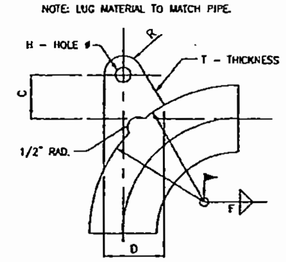

PIPE SIZE	ROD SIZE	H	R	T	C	D	CLEVIS	PIN	F
2 1/2"	1/2"	11/16"	1"	5/16"	5 1/4"	3 1/2"	2"	5/8"	1/4"
3"	1/2"	11/16"	1 1/4"	5/16"	5 1/2"	3 3/4"	2"	5/8"	1/4"
4"	5/8"	13/16"	1 1/2"	3/8"	6"	4"	2"	3/4"	1/4"
6"	3/4"	15/16"	1 3/4"	1/2"	7"	4 1/2"	2 1/2"	7/8"	1/4"
8"	7/8"	1 1/16"	2 1/4"	5/8"	8"	5"	2 1/2"	1"	3/8"
10"	7/8"	1 1/16"	2 1/2"	3/4"	8"	6"	2 1/2"	1"	3/8"
12"	7/8"	1 1/16"	2 1/2"	3/4"	8"	6"	2 1/2"	1"	3/8"
14"	1"	1 3/16"	3"	7/8"	8"	7"	3"	1 1/8"	1/2"
16"	1"	1 3/16"	3"	7/8"	8"	8"	3"	1 1/8"	1/2"
18"	1 1/8"	1 5/16"	3"	1"	8"	8"	3"	1 1/4"	1/2"
20"	1 1/4"	1 7/16"	3"	1 1/8"	8"	9"	3"	1 3/8"	1/2"
24"	1 1/4"	1 7/16"	3"	1 1/8"	8"	9"	3"	1 3/8"	1/2"
30"	1 1/2"	1 11/16"	3"	1 1/8"	8"	10"	3 1/2"	1 5/8"	1/2"

ITEM 60

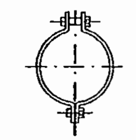

USE ON PIPE UP TO 8"DIA. & WITH NO INSULATION
CARBON STEEL MEDIUM WEIGHT PIPE CLAMP
GRINNELL NO. 212 OR EQUAL

ITEM 61

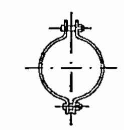

USE WITH PIPE 10"DIA. AND LARGER & WITH NO INSULATION
CARBON STEEL HEAVY WEIGHT PIPE CLAMP
GRINNELL NO. 216 OR EQUAL

ITEM 62

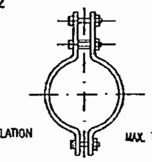

USE ON PIPE UP TO 8"DIA.
CARBON STEEL DOUBLE BOLT PIPE CLAMP
GRINNELL NO. 295 OR EQUAL

ITEM 63

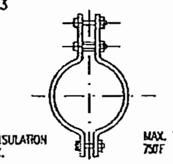

USE ON 8"DIA. & LARGER
CARBON STEEL HEAVY DUTY DOUBLE BOLT PIPE CLAMP
GRINNELL NO. 295H OR EQUAL

ITEM 64

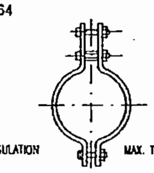

USE ON PIPE UP TO 10"DIA.
ALLOY STEEL DOUBLE BOLT PIPE CLAMP
GRINNELL NO. 295A OR EQUAL

ITEM 66

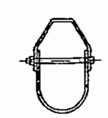

USE ON PIPE UP TO 8"DIA. & WITH NO INSULATION
ADJUSTABLE CLEVIS
GRINNELL NO. 260 OR EQUAL

ITEM 67 & 67S

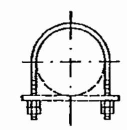

STANDARD CARBON STEEL U-BOLT
GRINNELL NO. 137 OR EQUAL
FIG. 67S IS SPECIAL CARBON STEEL U-BOLT GRINNELL NO. 137S OR EQUAL

ITEM 69

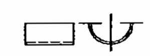

USE WITH PIPE WITH UP TO 2" OF INSULATION
180 DEGREE INSULATION PROTECTION SHIELD
GRINNELL NO. 167 OR EQUAL

ITEM 75

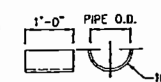

NOTE:
TACK WELD TO PIPE
180 DEGREE PIPE SADDLE

ITEM 76

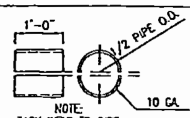

NOTE:
TACK WELD TO PIPE
MATERIAL SAME AS PIPE
360 DEGREE PIPE SADDLE

ITEM 77

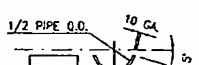

NOTE:
TACK WELD TO PIPE
MATERIAL SAME AS PIPE
150 DEGREE PIPE SADDLE

ITEM 85

CONCRETE CLEVIS PLATE
GRINNELL NO. 49 OR EQUAL

DWG NO	TITLE
-	
DRAWING TRACEABILITY LIST	

REF NUMBER	TITLE
-	
REFERENCES	
NEXT USED ON	

REV	DESCRIPTION	REV BY DATE	APP	CHECKED BY	DWGS
REVISIONS					

Rev.	REVISION DESCRIPTION	Date	By	Chk'd	Approved Design Lead	Approved Proj Mgr
E	ISSUED FOR CH2M APPROVAL AND 90% DESIGN REPORT	16 MAR 06	THB	JM	JL	JJ
D	ISSUED FOR DESIGN	16 DEC 2005	RRB		FWS	JDS
C	ISSUED FOR CH2M HILL REVIEW/90% REPORT	08 FEB 2005	CC	LE	FWS	TH
B	ISSUED FOR INTERNAL APPROVAL	10 NOV 2004	CC	LE	GJ	TH
A	ISSUED FOR INTERNAL REVIEW	01 NOV 2004	CC	LE	FWS	JDS

AMEC DRAWING NO F-145579-00-P-0003 REV E

amec

AMEC PROJECT: 145579-FINAL DBVS DESIGN

NAME — DRAWN BY: CC — DATE: SEPT 2004 — COMPANY: AMEC
DESIGNED BY
CHECKED BY
DESIGN / AREA LEAD
ENGINEERING MANAGER
PROJECT MANAGER
DESIGN AUTHORITY

U.S. DEPARTMENT OF ENERGY
Office of River Protection

BULK VITRIFICATION
TYPICAL PIPE SUPPORT
DETAILS SHT 3 OF 4

SIZE F — BLDG NO — INDEX NO — DWG NO — REV
SCALE NTS — EDT — SHEET — OF

FIELD SUPPORTS

In making requests for transmittal of data by any electronic media, the Company receiving such data agrees that AMEC Americas Limited cannot be held responsible for users of the data outside of or beyond the scope of our original agreement. Also, because data stored in electronic media or transmitted by electronic means can deteriorate undetected or be modified without the consultant's knowledge, the Company receiving data agrees that AMEC Americas Limited cannot be held liable for the compatibility, completeness or correctness of the data.

PIPING PLAN

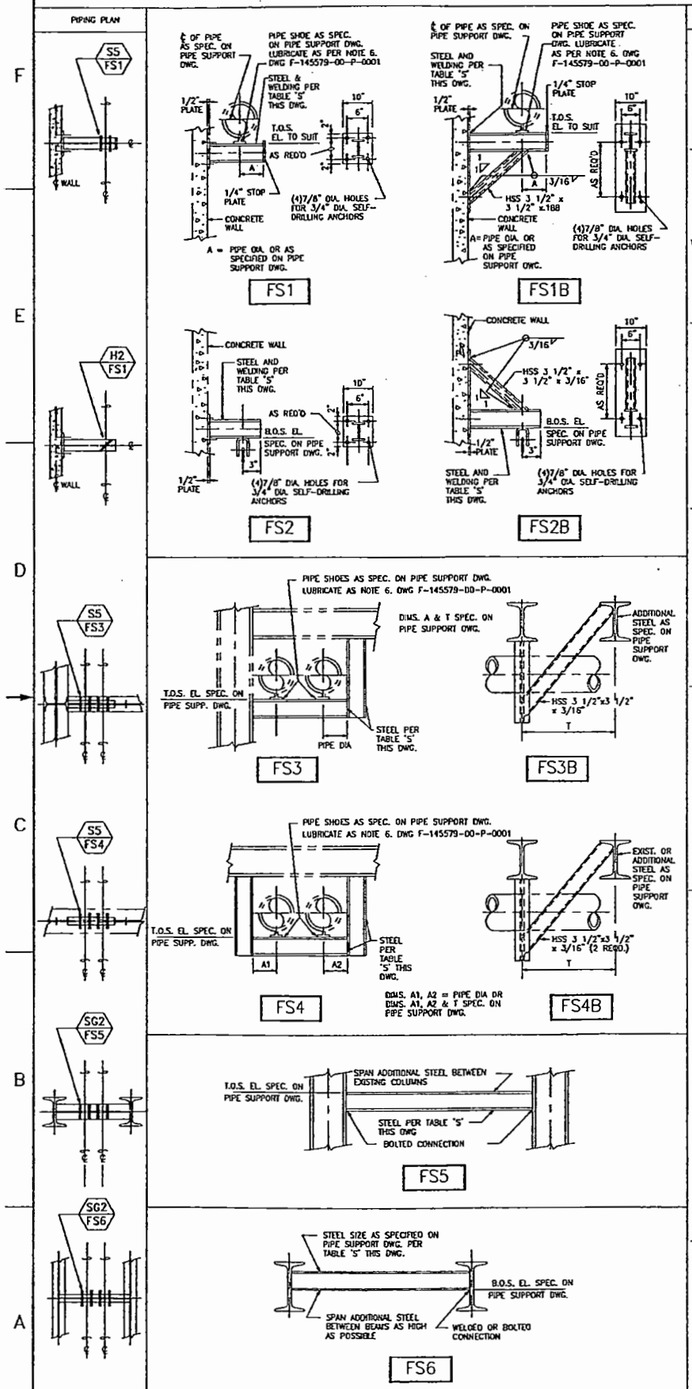

PIPING PLAN

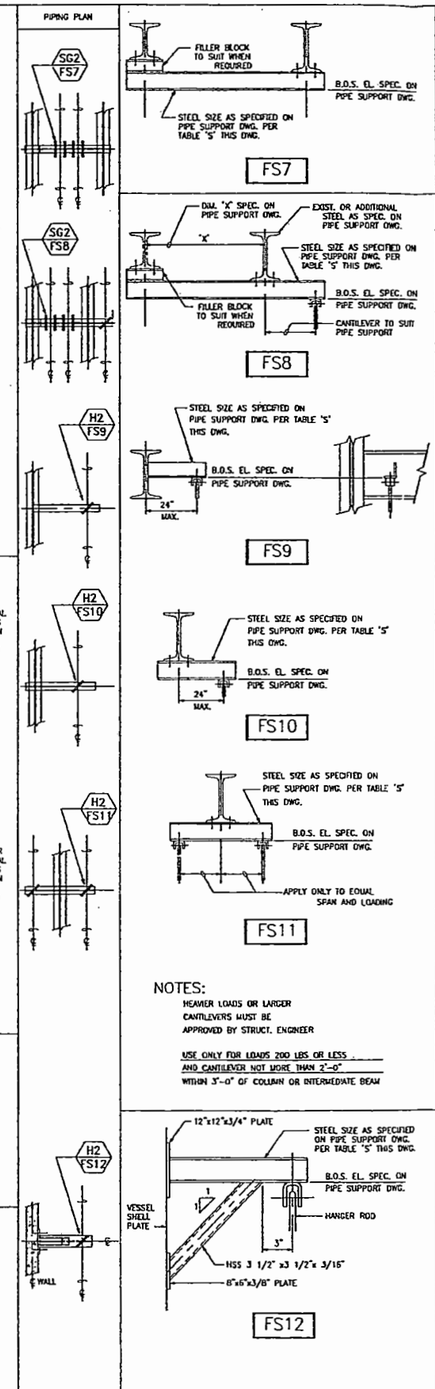

NOTES:

HEAVIER LOADS OR LARGER CANTILEVERS MUST BE APPROVED BY STRUCT. ENGINEER

USE ONLY FOR LOADS 200 LBS OR LESS AND CANTILEVER NOT MORE THAN 2'-0" WITHIN 3'-0" OF COLUMN OR INTERMEDIATE BEAM

PIPING PLAN

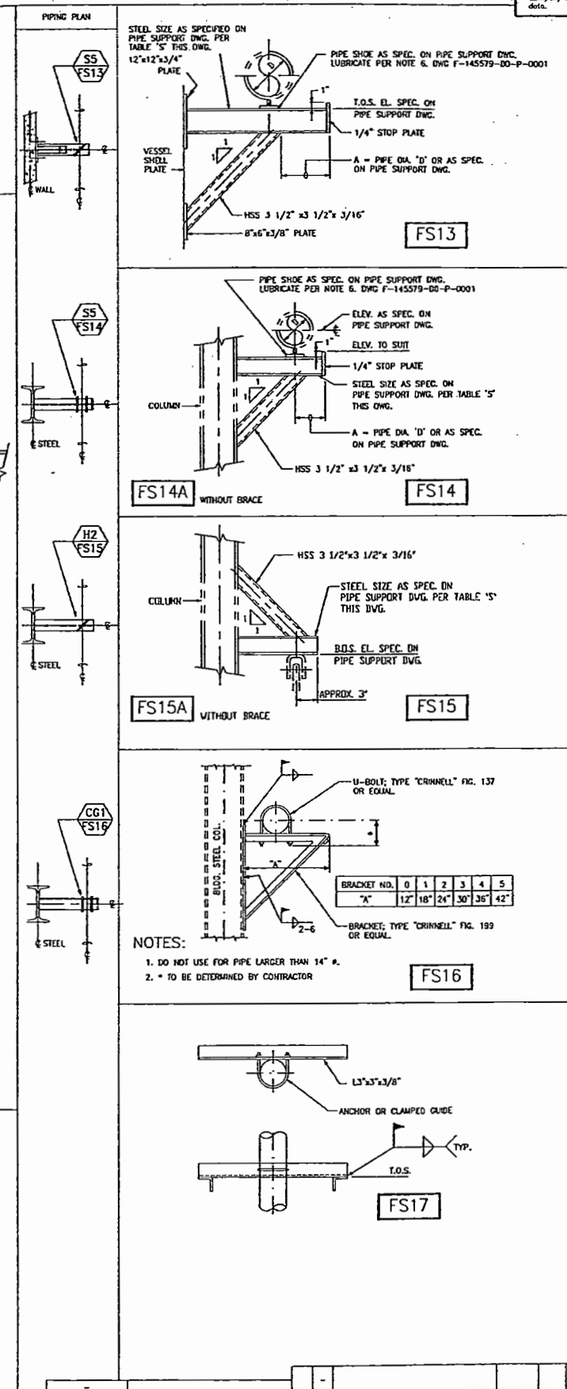

BRACKET NO.	0	1	2	3	4	5
"A"	12"	18"	24"	30"	36"	42"

NOTES:

1. DO NOT USE FOR PIPE LARGER THAN 14" ø.
2. * TO BE DETERMINED BY CONTRACTOR

TABLE 'S'

STRUCTURAL PIPE SUPPORT STEEL MEMBER DETAILS AND DESIGNATION NUMBERS

SIZE DESIGNATING NUMBERS	1	2	3	4	5	6
STRUCTURAL STEEL	2-1/2x2-1/2x3/8 L*	4x4x1/2 L*	(2)4x4x3/8 ⊓⊓	C4x7.25 C	(2)C4x7.25][	C6x10.5 C
MAX. FLANGE BOLT DIA.	1/2"	3/4"		1/2"		5/8"
MAX. ROD DIA.			5/8"		5/8"	

SIZE DESIGNATING NUMBERS	7	8	9	10	11	12
STRUCTURAL STEEL	(2) C6x10.5][	W4x13 I	W6x15 I	W8x24 I	W10x39 I	W12x53 I
MAX. FLANGE BOLT DIA.		5/8"	7/8"	7/8"	7/8"	7/8"
MAX. ROD DIA.	3/4"					

THE STRUCTURAL MEMBERS SPECIFIED FROM THE ABOVE TABLE ARE OF THE MINIMUM WEIGHT REQUIRED. IF A MEMBER IS NOT AVAILABLE AS SPECIFIED ABOVE, THEN SUBSTITUTE WITH A MEMBER OF THE SAME SIZE BUT USE THE NEXT HEAVIER WEIGHT MEMBER.

* A STRUCTURAL ANGLE WHEN REQUIRED FOR THE SUPPORT OF HANGER RODS SHALL BE INSTALLED WITH ITS HORIZONTAL LEG AT THE BOTTOM SO AS TO FACILITATE THE WELDING OF A HANGER ROD BEAM ATTACHMENT. USE MEMBERS 1 AND 2 ONLY FOR LIGHT LOADS AND SHORT CANTILEVERS.

BOLTED STEELWORK CONNECTIONS MUST BE USED INSTEAD OF WELDED CONNECTIONS UNLESS OTHERWISE NOTED ON DRAWING.

WELDING NOTE:

WHERE WELDING TO EXISTING STEEL IS INDICATED, USE 3/16" FILLET, EXCEPT 1/4" FILLET FOR MEMBERS 10, 11 AND 12. WELDS SHALL BE ALL AROUND WHERE POSSIBLE.

WHEN WELDING TO U/S OF A LOADED BEAM, THE WELDING BEAD SHOULD ALWAYS BE APPLIED IN A DIRECTION PARALLEL TO THE BEAM'S LONGITUDINAL CENTERLINE.

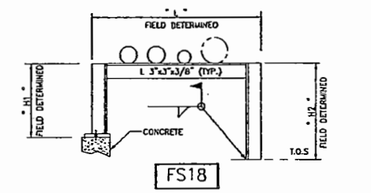

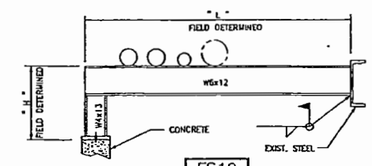

Rev.	REVISION DESCRIPTION	Date	By	Ch'k'd	Approved Design Level	Approved Rev. Auth.
E	ISSUED FOR CH2M HILL AND 90% DESING REPORT	16 MAR 05	THB	JM	JL	JJ
D	ISSUED FOR DESIGN	16 DEC 2005	RRB		FWS	JOS
C	ISSUED FOR CH2M HILL REVIEW/90% REPORT	08 FEB 2005	CC	LE	FWS	TH
B	ISSUED FOR INTERNAL APPROVAL	10 NOV 2004	CC	LE	CJ	TH
A	ISSUED FOR INTERNAL REVIEW	01 NOV 2004	CC	LE	FWS	JOS

AMEC DRAWING NO: F-145579-00-P-0004 REV: E

amec

AMEC PROJECT: 145579-FINAL DBVS DESIGN

U.S. DEPARTMENT OF ENERGY
Office of River Protection

BULK VITRIFICATION
TYPICAL PIPE SUPPORT DETAILS SHT 4 OF 4

NAME	DATE	COMPANY
DESIGN BY CC		
DRAWN BY		
CHECKED BY		
DESIGN / FIELD LEAD		
CONSTRUCTION MANAGER		
PROJECT MANAGER		
DESIGN AUTHORITY		

SIZE F | BLDG NO | PROJ NO | DWG NO | REV
SCALE NTS | CH | SHEET OF

DWG NO	TITLE
DRAWING TRACEABILITY LIST	

REF NUMBER	TITLE
REFERENCES	
NEXT USED ON	

NTS REL	REV NO	DESCRIPTION	REV BY DATE	REV BY	CHECKED BY	CHK'R	COMPANY
		REVISIONS					

RPP-24544
REV 1d

In making requests for transmittal of data by any electronic media, the Company receiving such data agrees that AMEC Americas Limited cannot be held responsible for users of the data outside of or beyond the scope of our original agreement. Also, because data stored in electronic media or transmitted by electronic means can deteriorate undetected or be modified without the consultant's knowledge, the Company receiving data agrees that AMEC Americas Limited cannot be held liable for the compatibility, completeness or correctness of the data.

No.	AMEC Dwg. No.	REFERENCE DRAWINGS
1	F-145579-36-V-0002	OFF-GAS TREATMENT – WASTE RECEIPT AREA PLAN
2	F-145579-36-V-0003	OFF-GAS TREATMENT – MELT & DRYER LOWER PLAN
3	F-145579-36-V-0004	OFF-GAS TREATMENT – MELT & DRYER MIDDLE PLAN
4	F-145579-36-V-0005	OFF-GAS TREATMENT – MELT & DRYER UPPER PLAN
5	F-145579-36-V-0006	OFF-GAS TREATMENT – WET SCRUBBER SKID PLAN
6	F-145579-36-V-0007	OFF-GAS TREATMENT – SCRUB & STACK PLAN
7	F-145579-36-V-0008	OFF-GAS TREATMENT – SECONDARY WASTE AREA PLAN

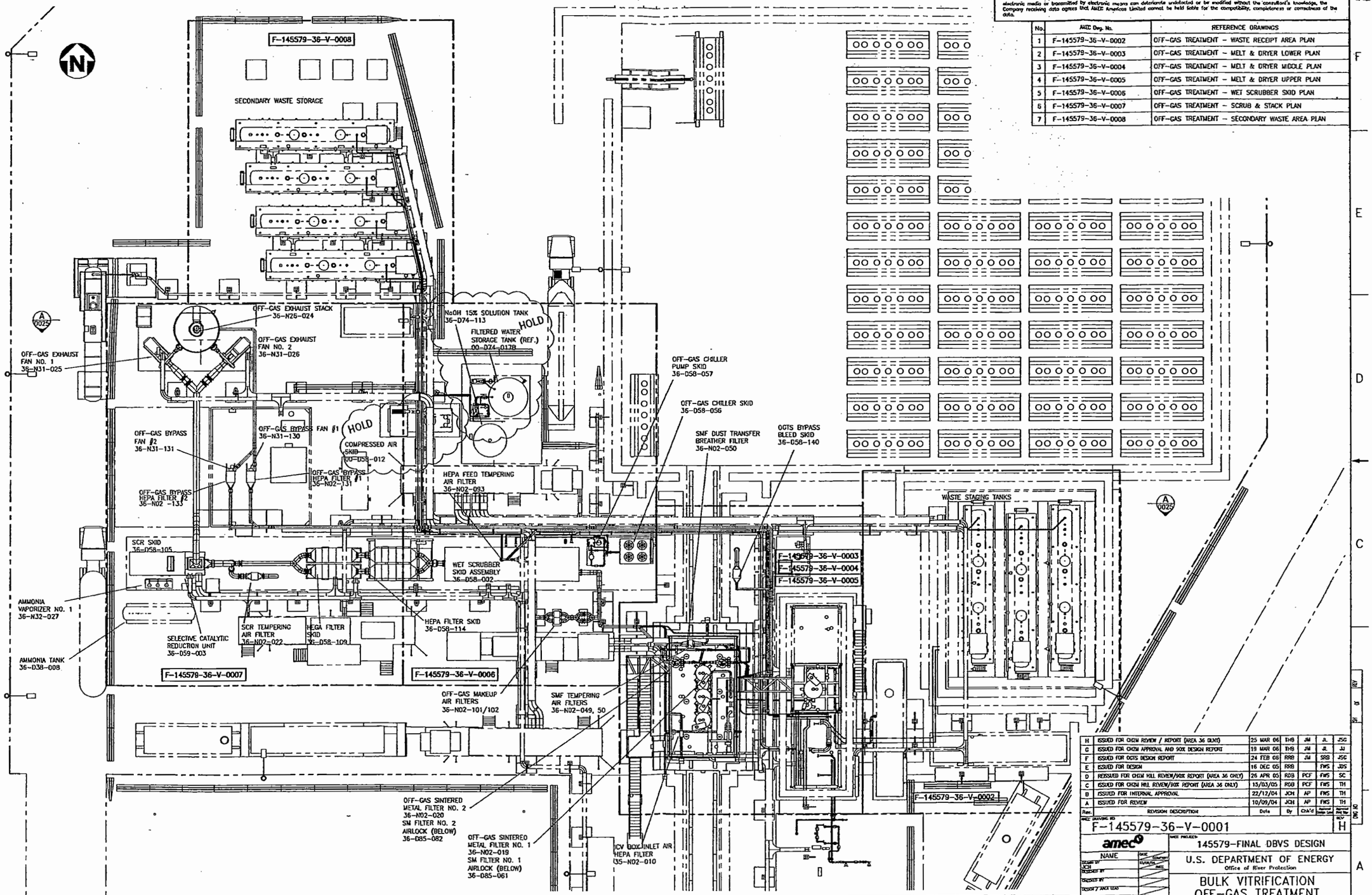

Rev.	REVISION DESCRIPTION	Date	By	Ch'k'd			
H	ISSUED FOR CH2M REVIEW / REPORT (AREA 36 ONLY)	25 MAR 06	THB	JM	JL	JSG	
G	ISSUED FOR CH2M APPROVAL AND 90% DESIGN REPORT	19 MAR 06	THB	JM	JL	JJ	
F	ISSUED FOR OGTS DESIGN REPORT	24 FEB 06	RRB	JM	SRB	JSG	
E	ISSUED FOR DESIGN	16 DEC 05	RRB		FWS	JDS	
D	REISSUED FOR CH2M HILL REVIEW/90% REPORT (AREA 36 ONLY)	26 APR 05	RDB	PCF	FWS	SC	
C	ISSUED FOR CH2M HILL REVIEW/90% REPORT (AREA 36 ONLY)	15/03/05	RDB	PCF	FWS	TH	
B	ISSUED FOR INTERNAL APPROVAL	22/12/04	JCH	AP	FWS	TH	
A	ISSUED FOR REVIEW	10/09/04	JCH	AP	FWS	TH	

AMEC DRAWING NO: F-145579-36-V-0001 REV: H

amec

AMEC PROJECT: 145579-FINAL DBVS DESIGN

U.S. DEPARTMENT OF ENERGY
Office of River Protection

BULK VITRIFICATION
OFF-GAS TREATMENT
PLOT PLAN

NAME	DATE	COMPANY
DRAWN BY JCH	10/09/04	AMEC
DESIGNED BY		
CHECKED BY		
DESIGN / AREA LEAD		
DISCIPLINE MANAGER		
PROJECT MANAGER		
DESIGN AUTHORITY		

SIZE F | BLDG NO | MODEL NO | DWG NO | REV
SCALE 3/32"=1' | CDE | SHEET | OF

DWG NO	TITLE
–	

DRAWING TRACEABILITY LIST

REF NUMBER	TITLE
–	

REFERENCES
NEXT USED ON

NO.	REV NO	DESCRIPTION	REV BY DATE	REV BY	CHECKED BY	CHK'D	COMPANY
–	–						

REVISIONS

In making requests for transmittal of data by any electronic media, the Company receiving such data agrees that AMEC Americas Limited cannot be held responsible for uses at the data outside of or beyond the scope of our original agreement. Also, because data stored in electronic media or transmitted by electronic means can deteriorate undetected or be modified without the consultant's knowledge, the Company receiving data agrees that AMEC Americas Limited cannot be held liable for the compatibility, completeness or correctness of the data.

No.	AMEC Dwg. No.	REFERENCE DRAWINGS
1	F-145579-36-V-0026	OFF-GAS TREATMENT - WASTE RECEIPT AREA SECTION 'A'
2	F-145579-00-D-0011	WASTE RECEIPT & DRYER AREA G.A. - PLAN
3	F-145579-00-D-0028	WASTE RECEIPT & DRYER AREA G.A. - SECTIONS 'A,B,C,&D'
4	F-145579-00-P-0005	DRYER PIPING LAYOUT
5	F-145579-00-P-0010	DRYER PIPING SECTIONS

NOTES:

1. ONLY VENTILATION DUCTWORK PIPING AND SUPPORTING CABLE TRAYS SHOWN. ALL OTHER PIPING AND CABLE TRAYS OMITTED FOR CLARITY.
2. DIMENSIONS AND LOCATIONS OF JOINTS TO BE CONFIRMED BY SELECTED VENDOR.
3. VENTILATION DUCTWORK PIPING TO BE MINIMUM THICKNESS SCHEDULE 40 EXCEPT AS NOTED.
4. DUCTWORK MATERIAL AND FABRICATION SHALL CONFORM TO ASME B31.1 POWER PIPING.
5. DUCTWORK FITTINGS AS PER AMEC DWG. NO. F-145579-36-V-0023 STANDARD DETAILS - SHT. 1.
6. I.D. DESIGNATES ISOLATION DAMPERS TO BE FLANGERS ROUND BUBBLE-TIGHT (FLAT BLADE TYPE). FLANGES TO MATCH 150# DRILLING.
7. VENTILATION DUCTWORK SUPPORTS ARE REPRESENTED BY A HEXAGON.
   EXAMPLES - VS- OR RG- CG- CS- A- H- DS-
   FOR "VS" TYPE SUPPORTS SEE DWG. F-145579-36-0024.
   FOR ALL OTHER SUPPORTS SEE DRAWINGS F-145579-00-P-0001 TO -0004.
8. SEE BRANCH REINFORCEMENT DETAIL ON DWG. F-145579-36-V-0023 FOR FITTINGS SHOWN SHADED.

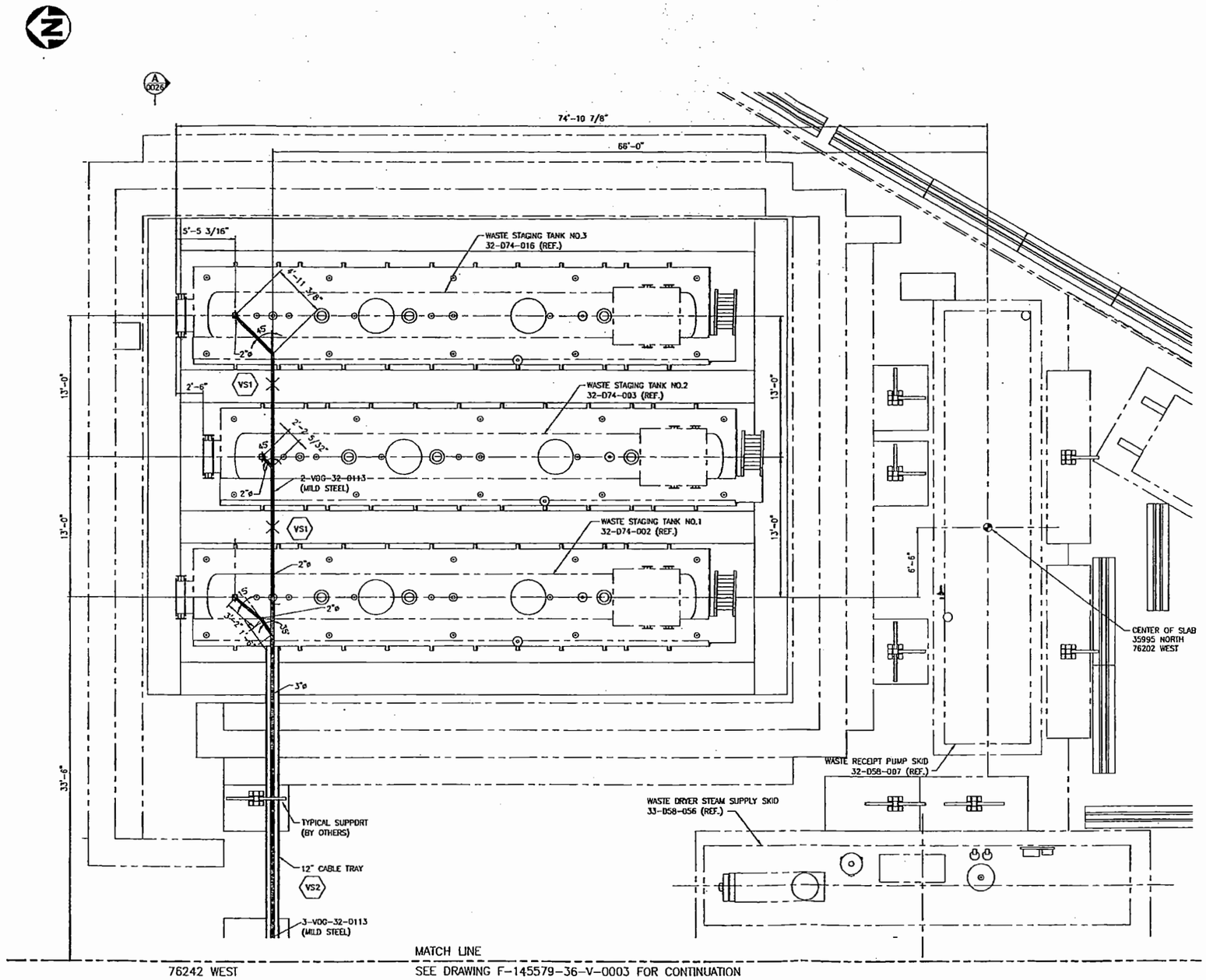

NOT APPROVED FOR CONSTRUCTION

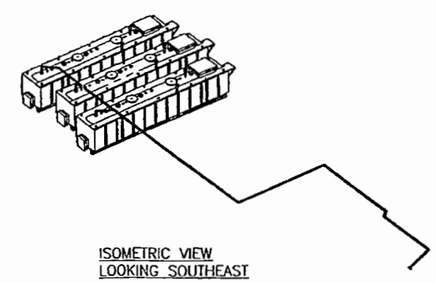

ISOMETRIC VIEW
LOOKING SOUTHEAST

Rev.	REVISION DESCRIPTION	Date	By	Chk'd	Approved Design Lead	Approved Proj. Mgr.
H	RE-ISSUED FOR OGTS DESIGN REPORT	24 MAR 06	SMF	JM	JL	JSC
G	ISSUED FOR OGTS DESIGN REPORT	24 FEB 06	RRB	JM	SRB	JSC
F	ISSUED FOR DESIGN	18 DEC 05	RRB		FWS	JDS
E	REISSUED FOR CH2M HILL REVIEW/SDK REPORT - (AREA 36 ONLY)	25 APR 05	RDB	PCF	FWS	SC
D	ISSUED FOR CH2M HILL REVIEW/SDK REPORT - (AREA 36 ONLY)	15 MAR 05	RDB	PCF	FWS	TH
C	ISSUED FOR CH2M HILL REVIEW/SDK REPORT	20 JAN 05	RDB	PCF	FWS	TH
B	ISSUED FOR INTERNAL APPROVAL	13 DEC 04	RDB	AP	FWS	TH
A	ISSUED FOR REVIEW	21/10/04	JCH	AP	FWS	JDS

AMEC DRAWING NO: F-145579-36-V-0002
REV: H

amec

AMEC PROJECT: 145579-FINAL DBVS DESIGN

	NAME	DATE	Signature
DRAWN BY	JCH		
REVIEWED BY			
CHECKED BY			
DESIGN / AREA LEAD			
DISCIPLINE MANAGER			
PROJECT MANAGER			
DESIGN AUTHORITY			

U.S. DEPARTMENT OF ENERGY
Office of River Protection

BULK VITRIFICATION
OFF-GAS TREATMENT
WASTE RECEIPT AREA PLAN

SIZE: F | CODE NO | WEIGHT | DWG NO | REV
SCALE: 1/4"=1'-0" | SHEET | OF

DWG NO	TITLE
-	-

DRAWING TRACEABILITY LIST

REF NUMBER	TITLE
-	-

REFERENCES
NEXT USED ON

NTD	REV BY	DESCRIPTION	REV BY DATE	REV BY	CHECKED BY	DATE
	-					

REVISIONS

RPP-24544
REV 1d

In making requests for transmittal of data by any electronic media, the Company receiving such data agrees that AMEC Americas Limited cannot be held responsible for users of the data outside of or beyond the scope of our original agreement. Also, because data stored in electronic media or transmitted by electronic means can deteriorate undetected or be modified without the consultant's knowledge, the Company receiving data agrees that AMEC Americas Limited cannot be held liable for the compatibility, completeness or correctness of the data.

No.	AMEC Dwg. No.	REFERENCE DRAWINGS
1	F-145579-00-D-0041	MELT AREA G.A. ELEVATIONS NORTH AND WEST
2	F-145579-00-D-0051	MELT AREA G.A. PLAN VIEWS
3	F-145579-36-V-0004	OFF-GAS TREATMENT MELT & DRYER MIDDLE PLAN
4	F-145579-36-V-0005	OFF-GAS TREATMENT MELT & DRYER UPPER PLANS
5	F-145579-36-V-0027	OFF-GAS TREATMENT MELT & DRYER SECTIONS A & B
6	F-145579-36-V-0028	OFF-GAS TREATMENT MELT & DRYER SECTION C
7	F-145579-36-V-0029	OFF-GAS TREATMENT MELT & DRYER SECTION D
8	F-145579-36-V-0030	OFF-GAS TREATMENT MELT & DRYER SECTION E

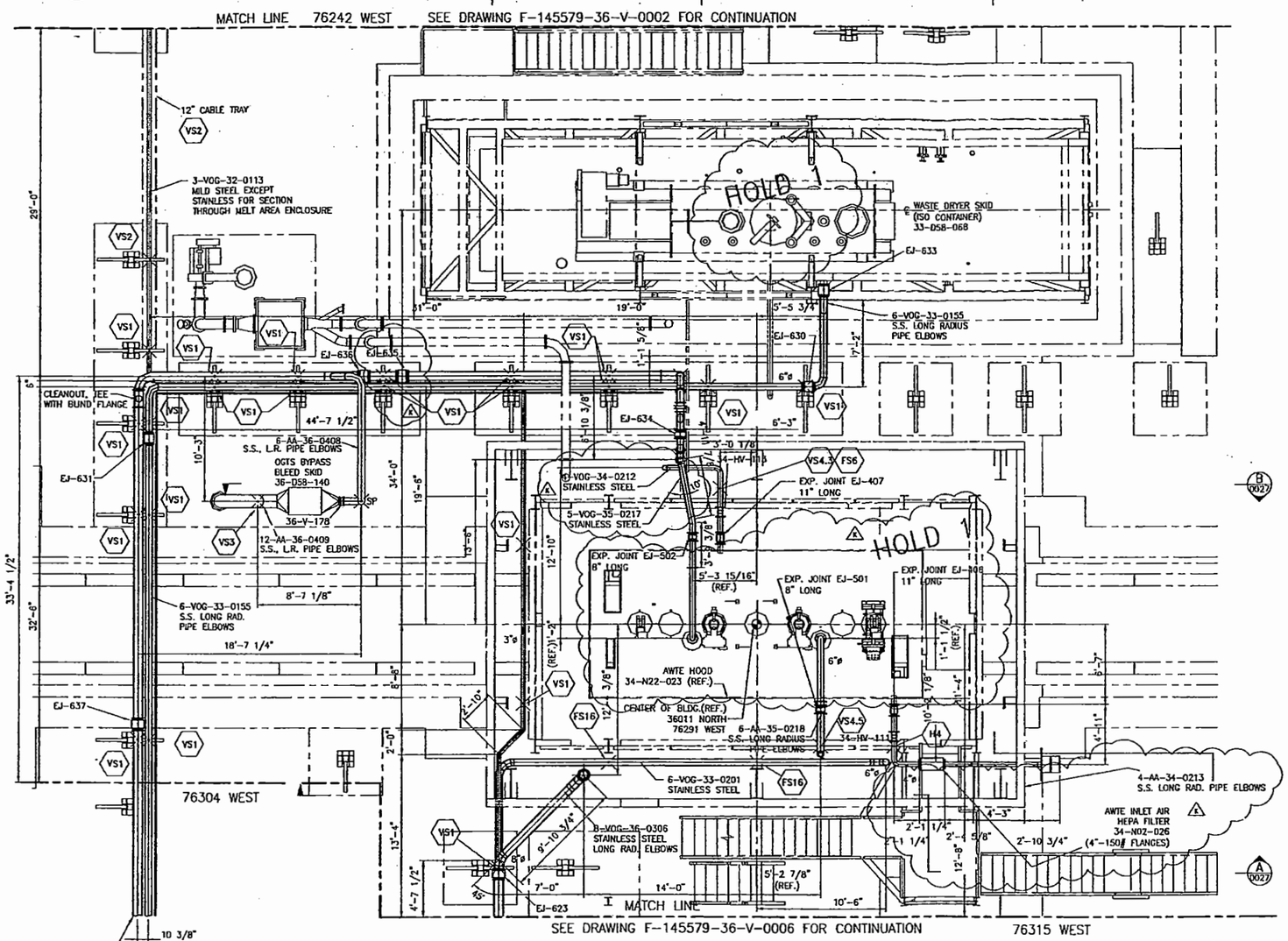

PLAN @ 675'-0"

NOTES:

1. ONLY VENTILATION DUCTWORK PIPING AND SUPPORTING CABLE TRAYS SHOWN. ALL OTHER PIPING AND CABLE TRAYS OMITTED FOR CLARITY.
2. DIMENSIONS AND LOCATIONS OF JOINTS TO BE CONFIRMED BY SELECTED VENDOR.
3. VENTILATION DUCTWORK PIPING TO BE MINIMUM THICKNESS SCHEDULE 40 COMPLETE WITH LONG RADIUS ELBOWS FOR 6" AND SMALLER AND SCHEDULE 10 PIPE AND PIPE FITTINGS FOR PIPE 8" AND LARGER EXCEPT AS NOTED.
4. DUCTWORK MATERIAL AND FABRICATION SHALL CONFORM TO ASME B31.1 POWER PIPING.
5. DUCTWORK FITTINGS AS PER AMEC DWG. NO. F-145579-36-V-0023 STANDARD DETAILS - SHT. 1.
6. I.D. DESIGNATES ISOLATION DAMPERS TO BE FLANGERS ROUND BUBBLE-TIGHT (FLAT BLADE TYPE). FLANGES TO MATCH 150# DRILLING.
7. VENTILATION DUCTWORK SUPPORTS ARE REPRESENTED BY A HEXAGON.
   EXAMPLES - VS- OR RG- CG- CS- A- H- DS-
   FOR 'VS' TYPE SUPPORTS SEE DWG. F-145579-36-0024.
   FOR ALL OTHER SUPPORTS SEE DRAWINGS F-145579-00-P-0001 TO -0004.
8. SEE BRANCH REINFORCEMENT DETAIL ON DWG. F-145579-36-V-0023 FOR FITTINGS SHOWN SHADED.

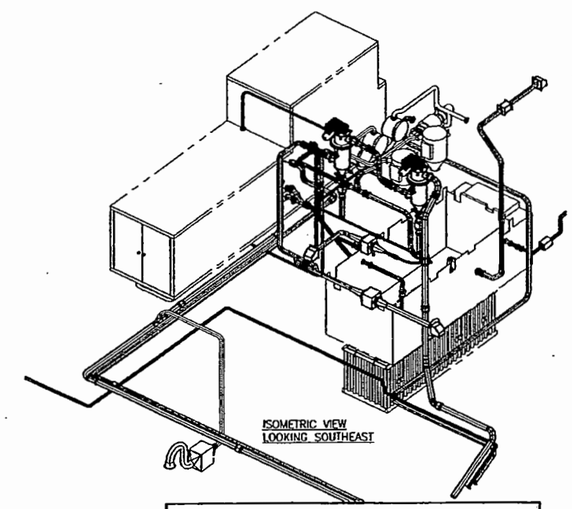

NOT APPROVED FOR CONSTRUCTION

HOLDS:
1. PENDING VENDOR INFORMATION.

Rev.	REVISION DESCRIPTION	Date	By	Ch'd	Approved Amec Lead	Approved Client Rep
K	RE-ISSUED FOR OGTS DESIGN REPORT	25 MAR 06	THB	JM	JL	JSG
J	ISSUED FOR OGTS DESIGN REPORT	24 FEB 06	RRB	JM	SRB	JSG
H	ISSUED FOR DESIGN	16/12/05	RRB		FWS	JDS
G	ISSUED FOR INFORMATION - OFF-GAS SYSTEM REVISED	14/11/05	RRB		FWS	JDS
F	REISSUED FOR CH2M HILL REVIEW/90% REPORT(AREA 36 ONLY)	26/04/05	JCH	PCF	FWS	SC
E	ISSUED FOR CH2M HILL REVIEW/90% REPORT (AREA 36 ONLY)	15/03/05	JCH	PCF	FWS	TH
D	ISSUED FOR CH2M HILL REVIEW/90% REPORT (VCV SYSTEM)	02/03/05	JCH	PCF	CJ	TH
C	ISSUED FOR CH2M HILL REVIEW/90% REPORT (AREA 33 ONLY)	31/01/05	RRB	PCF	FWS	TH
B	ISSUED FOR INTERNAL APPROVAL	17/12/04	JCH	AP	FWS	TH
A	ISSUED FOR REVIEW	05/11/04	JCH	AP	FWS	TH

AMEC DRAWING NO: F-145579-36-V-0003 REV: K

amec

AMEC PROJECT: 145579-FINAL DBVS DESIGN

U.S. DEPARTMENT OF ENERGY
Office of River Protection

BULK VITRIFICATION
OFF-GAS TREATMENT
MELT & DRYER LOWER PLAN

NAME	DATE	COMPANY
DRAWN BY JCH		
DESIGNED BY		
CHECKED BY		
DESIGN / AREA LEAD		
DISCIPLINE MANAGER		
PROJECT MANAGER		
DESIGN AUTHORITY		

SIZE F | BLDG NO | INDEX NO | DWG NO | REV

SCALE 1/4"=1'-0" | SHEET | OF

DWG NO	TITLE	REF NUMBER	TITLE
-		-	

DRAWING TRACEABILITY LIST — REFERENCES — NEXT USED ON

WPD NO	REV NO	DESCRIPTION	REV BY DATE	REV BY	CHECKED BY	ENGR	COMPANY
	-						

REVISIONS

In making requests for transmittal of data by any electronic media, the Company receiving such data agrees that AMEC Americas Limited cannot be held responsible for users of the data outside of or beyond the scope of our original agreement. Also, because data stored in electronic media or transmitted by electronic means can deteriorate undetected or be modified without the consultant's knowledge, the Company receiving data agrees that AMEC Americas Limited cannot be held liable for the compatibility, completeness or correctness of the data.

No.	AMEC Dwg. No.	REFERENCE DRAWINGS
1	F-145579-00-D-0041	MELT AREA G.A. ELEVATIONS NORTH AND WEST
2	F-145579-00-D-0051	MELT AREA G.A. PLAN VIEWS
3	F-145579-36-V-0003	OFF-GAS TREATMENT MELT & DRYER LOWER PLAN
4	F-145579-36-V-0005	OFF-GAS TREATMENT MELT & DRYER UPPER PLANS
5	F-145579-36-V-0027	OFF-GAS TREATMENT MELT & DRYER SECTIONS A & B
6	F-145579-36-V-0028	OFF-GAS TREATMENT MELT & DRYER SECTION C
7	F-145579-36-V-0029	OFF-GAS TREATMENT MELT & DRYER SECTION D
8	F-145579-36-V-0030	OFF-GAS TREATMENT MELT & DRYER SECTION E

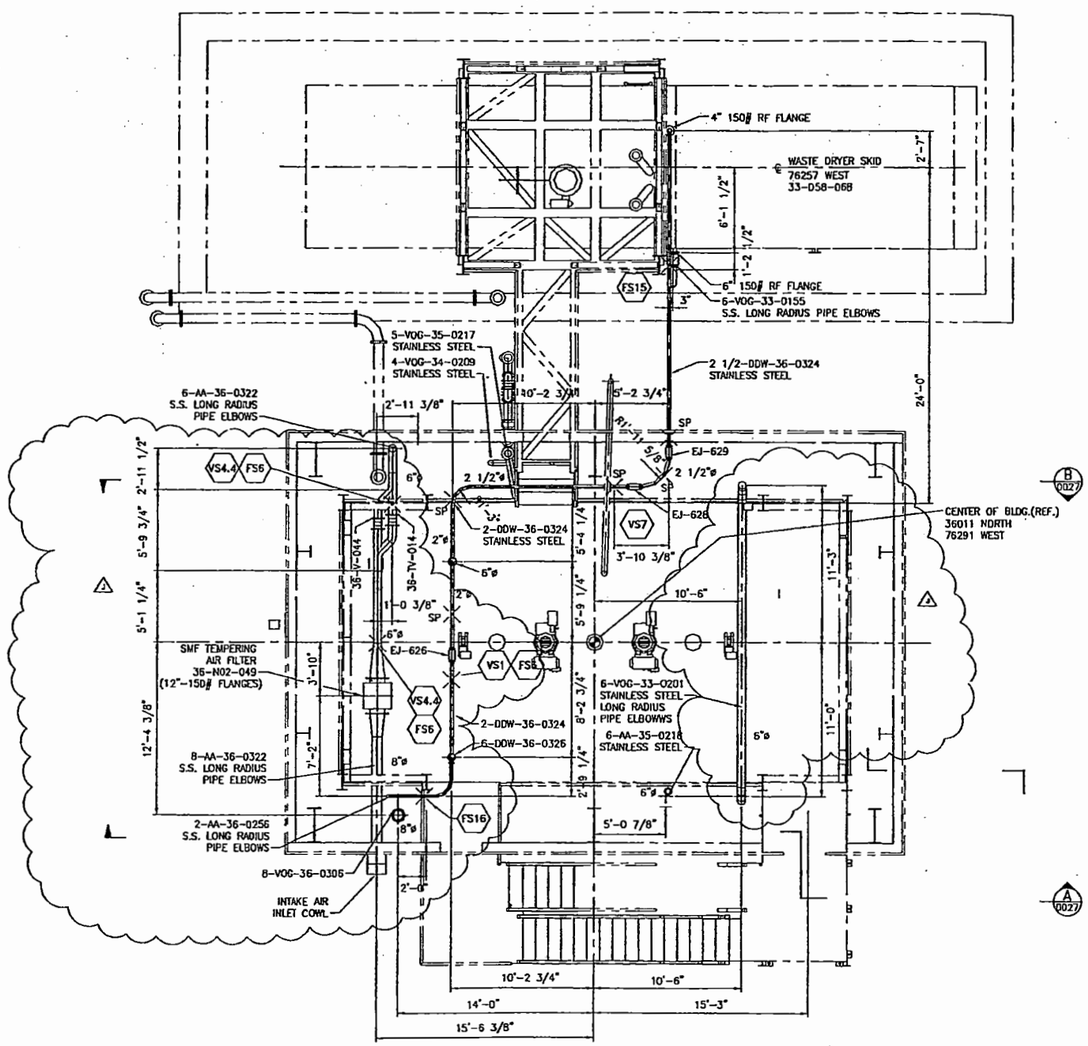

PLAN @ EL. 686'-0"

NOTES:

1. ONLY VENTILATION DUCTWORK PIPING AND SUPPORTING CABLE TRAYS SHOWN. ALL OTHER PIPING AND CABLE TRAYS OMITTED FOR CLARITY.
2. DIMENSIONS AND LOCATIONS OF JOINTS TO BE CONFIRMED BY SELECTED VENDOR.
3. VENTILATION DUCTWORK PIPING TO BE MINIMUM THICKNESS SCHEDULE 40 COMPLETE WITH LONG RADIUS ELBOWS FOR 6" AND SMALLER AND SCHEDULE 10 PIPE AND PIPE FITTINGS FOR PIPE 8" AND LARGER EXCEPT AS NOTED.
4. DUCTWORK MATERIAL AND FABRICATION SHALL CONFORM TO ASME B31.1 POWER PIPING.
5. DUCTWORK FITTINGS AS PER AMEC DWG. NO. F-145579-36-V-0023 STANDARD DETAILS - SHT. 1.
6. I.D. DESIGNATES ISOLATION DAMPERS TO BE FLANDERS ROUND BUBBLE-TIGHT (FLAT BLADE TYPE). FLANGES TO MATCH 150# DRILLING.
7. VENTILATION DUCTWORK SUPPORTS ARE REPRESENTED BY A HEXAGON.
   EXAMPLES - VS- OR RG- CG- CS- A- H- DS-
   FOR 'VS' TYPE SUPPORTS SEE DWG. F-145579-36-0024.
   FOR ALL OTHER SUPPORTS SEE DRAWINGS F-145579-00-P-0001 TO -0004.
8. SEE BRANCH REINFORCEMENT DETAIL ON DWG. F-145579-36-V-0023 FOR FITTINGS SHOWN SHADED.

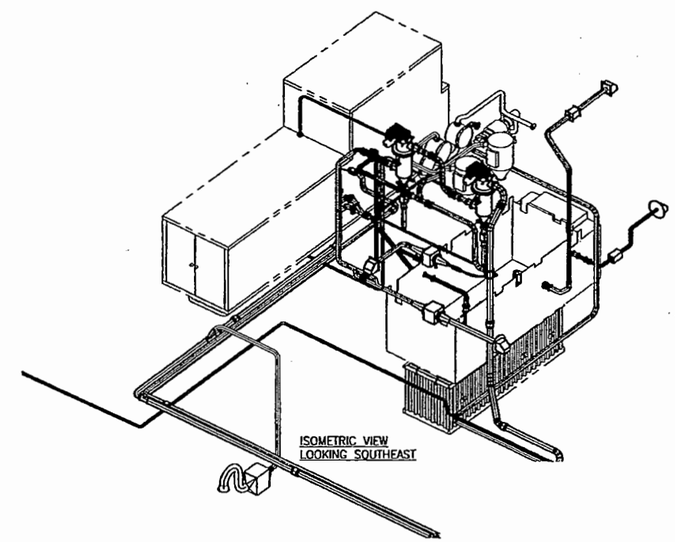

NOT APPROVED FOR CONSTRUCTION

Rev.	REVISION DESCRIPTION	Date	By	Ch'd	Approved Design Auth.	Approved Proj. Mgr.
J	ISSUED FOR CH2M REVIEW/ REPORT (AREA 36 ONLY)	25 MAR 06	THB	JM	JL	JSG
H	ISSUED FOR OGTS DESIGN REPORT	24 FEB 06	RRB	JM	SRB	JSG
G	ISSUED FOR DESIGN	16/12/05	RRB		FWS	JDS
F	REISSUED FOR CH2M HILL REVIEW/90% REPORT (AREA 36 ONLY)	28/04/05	JCH	PCF	FWS	SC
E	ISSUED FOR CH2M HILL REVIEW/90% REPORT - (AREA 36 ONLY)	15/03/05	JCH	PCF	FWS	TH
D	ISSUED FOR CH2M HILL REVIEW/90% REPORT - (ICV SYSTEM)	02/03/05	JCH	PCF	GJ	TH
C	ISSUED FOR CH2M HILL REVIEW/90% REPORT - (AREA 33 ONLY)	31/01/05	JCH	PCF	FWS	TH
B	ISSUED FOR INTERNAL APPROVAL	17/12/04	JCH	AP	FWS	TH
A	ISSUED FOR REVIEW	05/11/04	JCH	AP	FWS	TH

AMEC DRAWING NO: F-145579-36-V-0004 REV: J

amec

AMEC PROJECT: 145579-FINAL DBVS DESIGN

U.S. DEPARTMENT OF ENERGY
Office of River Protection

BULK VITRIFICATION
OFF-GAS TREATMENT
MELT & DRYER MIDDLE PLAN

NAME	DATE	COMPANY
DRAWN BY JCH	15/12/04	AMEC
REVIEWED BY		
CHECKED BY		
DESIGN / AREA LEAD		
ENGINEERING MANAGER		
PROJECT MANAGER		
DESIGN AUTHORITY		

SIZE F | BLDG NO | AREA NO | DWG NO | REV

SCALE 1/4"=1'-0" | SHEET | OF

DWG NO	TITLE
DRAWING TRACEABILITY LIST	

REF NUMBER	TITLE
REFERENCES	
NEXT USED ON	

REV NO	DESCRIPTION	REV BY DATE	REV BY	CHECKED BY	ENGR	COMPANY
	REVISIONS					

RPP-24544
REV 1d

In making requests for transmittal of data by any electronic media, the Company receiving such data agrees that AMEC Americas Limited cannot be held responsible for users of the data outside of or beyond the scope of our original agreement. Also, because data stored in electronic media or transmitted by electronic means can deteriorate undetected or be modified without the consultant's knowledge, the Company receiving data agrees that AMEC Americas Limited cannot be held liable for the compatibility, completeness or correctness of the data.

No.	AMEC Dwg. No.	REFERENCE DRAWINGS
1	F-145579-00-D-0041	MELT AREA G.A. ELEVATIONS NORTH AND WEST
2	F-145579-00-D-0051	MELT AREA G.A. PLAN VIEWS
3	F-145579-36-V-0003	OFF-GAS TREATMENT MELT & DRYER LOWER PLAN
4	F-145579-36-V-0004	OFF-GAS TREATMENT MELT & DRYER MIDDLE PLAN
5	F-145579-36-V-0027	OFF-GAS TREATMENT MELT & DRYER SECTIONS A & B
6	F-145579-36-V-0028	OFF-GAS TREATMENT MELT & DRYER SECTION C
7	F-145579-36-V-0029	OFF-GAS TREATMENT MELT & DRYER SECTION D
8	F-145579-36-V-0030	OFF-GAS TREATMENT MELT & DRYER SECTION E

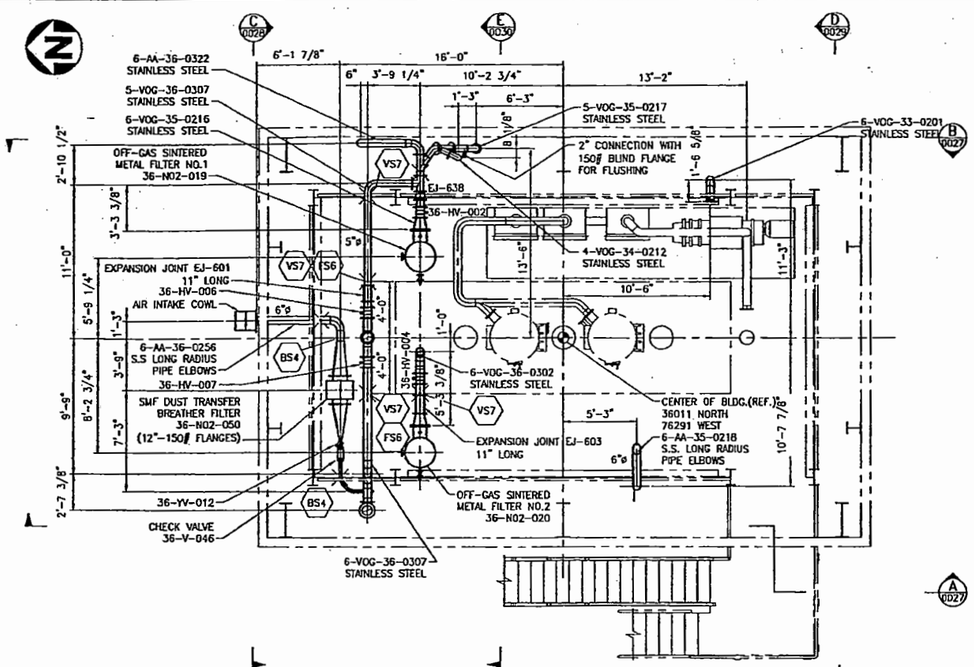

PLAN @ EL. 696'-0"

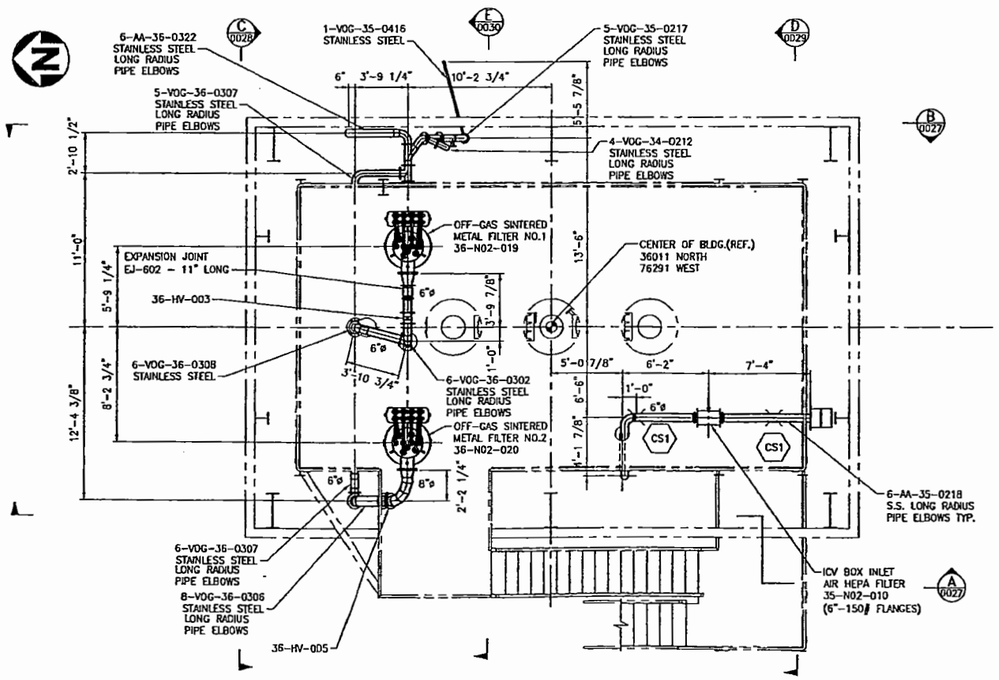

PLAN @ EL. 706'-0"

NOTES:

1. ONLY VENTILATION DUCTWORK PIPING AND SUPPORTING CABLE TRAYS SHOWN. ALL OTHER PIPING AND CABLE TRAYS OMITTED FOR CLARITY.
2. DIMENSIONS AND LOCATIONS OF JOINTS TO BE CONFIRMED BY SELECTED VENDOR.
3. VENTILATION DUCTWORK PIPING TO BE MINIMUM THICKNESS SCHEDULE 40 COMPLETE WITH LONG RADIUS ELBOWS FOR 6" AND SMALLER AND SCHEDULE 10 PIPE AND PIPE FITTINGS FOR PIPE 8" AND LARGER EXCEPT AS NOTED.
4. DUCTWORK MATERIAL AND FABRICATION SHALL CONFORM TO ASME B31.1 POWER PIPING.
5. DUCTWORK FITTINGS AS PER AMEC DWG. NO. F-145579-36-V-0023 STANDARD DETAILS - SHT. 1.
6. I.D. DESIGNATES ISOLATION DAMPERS TO BE FLANGERS ROUND BUBBLE-TIGHT (FLAT BLADE TYPE). FLANGES TO MATCH 150# DRILLING.
7. VENTILATION DUCTWORK SUPPORTS ARE REPRESENTED BY A HEXAGON.
   EXAMPLES - VS- OR RG- CG- CS- A- H- OS-
   FOR 'VS' TYPE SUPPORTS SEE DWG. F-145579-36-0024.
   FOR ALL OTHER SUPPORTS SEE DRAWINGS F-145579-00-P-0001 TO -0004.
8. SEE BRANCH REINFORCEMENT DETAIL ON DWG. F-145579-36-V-0023 FOR FITTINGS SHOWN SHADED.

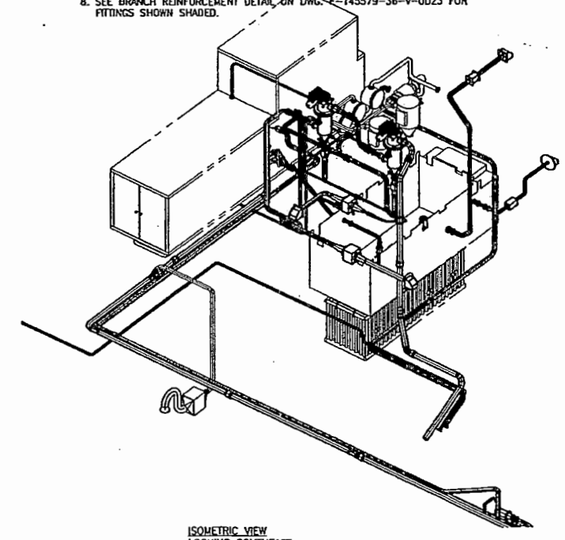

ISOMETRIC VIEW
LOOKING SOUTHEAST

NOT APPROVED FOR CONSTRUCTION

Rev.	REVISION DESCRIPTION	Date	By	Chk'd	Approved	Approved Proj. Eng.
H	ISSUED FOR CH2M REVIEW/ REPORT (AREA 36 ONLY)	25 MAR 06	SW	JM	JL	JSG
G	ISSUED FOR OGTS DESIGN REPORT	24 FEB 06	RRB	JM	SRB	JSG
F	ISSUED FOR DESIGN	16/12/05	RRB		FWS	JDS
E	REISSUED FOR CH2M HILL REVIEW/90% REPORT (AREA 36 ONLY)	26/04/05	JCH	PCF	FWS	SC
D	ISSUED FOR CH2M HILL REVIEW/90% REPORT (AREA 36 ONLY)	15/03/05	JCH	PCF	FWS	TH
C	ISSUED FOR CH2M HILL REVIEW/80% REPORT (ICV SYSTEM)	02/03/05	JCH	PCF	CJ	TH
B	ISSUED FOR INTERNAL APPROVAL	17/12/04	JCH	AP	FWS	TH
A	ISSUED FOR REVIEW	05/11/05	JCH	AP	FWS	TH

AMEC DRAWING NO: F-145579-36-V-0005 REV: H

amec

AMEC PROJECT: 145579-FINAL DBVS DESIGN

U.S. DEPARTMENT OF ENERGY
Office of River Protection

BULK VITRIFICATION
OFF-GAS TREATMENT
MELT & DRYER UPPER PLAN

NAME	DATE	COMPANY
DESIGN BY JCH	16/12/05	AMEC
DESIGNED BY		
CHECKED BY		
DESIGN / AREA LEAD		
ENGINEERING MANAGER		
PROJECT MANAGER		
DESIGN AUTHORITY		

SIZE F | SCALE 1/4"=1'-0" | REV

DWG NO	TITLE
-	

DRAWING TRACEABILITY LIST

REF NUMBER	TITLE
-	

REFERENCES — NEXT USED ON

REV NO	DESCRIPTION	REV BY DATE	REV BY	CHECKED BY	CHGE COMPANY
-					

REVISIONS

In making requests for transmittal of data by any electronic media, the Company receiving such data agrees that AMEC Americas Limited cannot be held responsible for errors of the data outside of or beyond the scope of our original agreement. Also, because data stored in electronic media or transmitted by electronic means can deteriorate undetected or be modified without the consultant's knowledge, the Company receiving data agrees that AMEC Americas Limited cannot be held liable for the compatibility, completeness or correctness of the data.

No.	AMEC Dwg. No.	REFERENCE DRAWINGS
1	F-145579-36-V-0031	OFF-GAS TREATMENT - WET SCRUBBER SKID SECTIONS
2	F-145579-00-D-0009	OFF-GAS & ELECT. TRAILERS G.A. - PLAN
3	F-145579-00-P-0007	OFF-GAS TREATMENT - PIPING LAYOUT
4	F-145579-00-P-0012	OFF-GAS TREATMENT - PIPING SECTIONS

NOTES:

1. ONLY VENTILATION DUCTWORK PIPING AND SUPPORTING CABLE TRAYS SHOWN. ALL OTHER PIPING AND CABLE TRAYS OMITTED FOR CLARITY.
2. DIMENSIONS AND LOCATIONS OF JOINTS TO BE CONFIRMED BY SELECTED VENDOR.
3. VENTILATION DUCTWORK PIPING TO BE MINIMUM THICKNESS SCHEDULE 40 COMPLETE WITH LONG RADIUS ELBOWS FOR 6" AND SMALLER AND SCHEDULE 10 PIPE AND PIPE FITTINGS FOR PIPE 8" AND LARGER EXCEPT AS NOTED.
4. DUCTWORK MATERIAL AND FABRICATION SHALL CONFORM TO ASME B31.1 POWER PIPING.
5. DUCTWORK FITTINGS AS PER AMEC DWG. NO. F-145579-36-V-0023 STANDARD DETAILS - SHT. 1.
6. I.D. DESIGNATES ISOLATION DAMPERS TO BE FLANGERS ROUND BUBBLE-TIGHT (FLAT BLADE TYPE). FLANGES TO MATCH 150# DRILLING.
7. VENTILATION DUCTWORK SUPPORTS ARE REPRESENTED BY A HEXAGON.
   EXAMPLES - VS- OR RG- CG- CS- A- H- DS-
   FOR 'VS' TYPE SUPPORTS SEE DWG. F-145579-36-0024.
   FOR ALL OTHER SUPPORTS SEE DRAWINGS F-145579-00-P-0001 TO -0004.
8. △2 SEE BRANCH REINFORCEMENT DETAIL ON DWG. F-145579-36-V-0023 FOR FITTINGS SHOWN SHADED.
9. HOLD 1 FOR VENDOR INFORMATION.

HOLDS:

1. PENDING VENDOR INFORMATION.

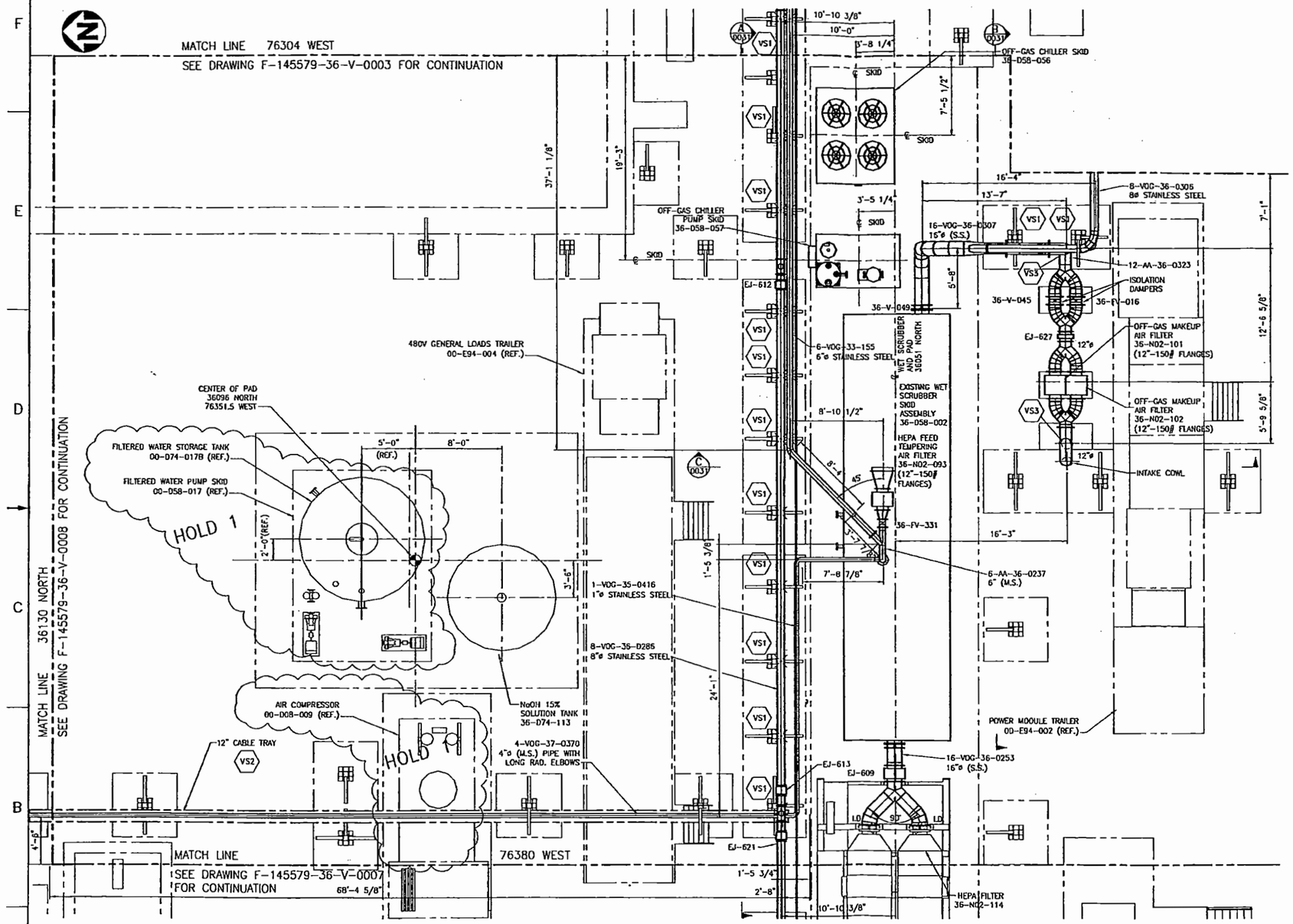

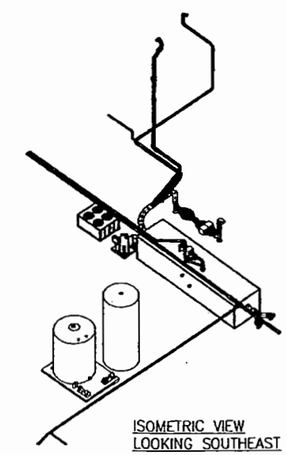

ISOMETRIC VIEW
LOOKING SOUTHEAST

REV	REVISION DESCRIPTION	Date	By	Chk'd	Approved Supp Eng	Approved Proj Eng
H	ISSUED FOR CHOM REVIEW/ REPORT (AREA 36 ONLY)	24 MAR 05	SW	JM	JL	JSG
G	ISSUED FOR OGTS DESIGN REPORT	24 FEB 06	RRB	JM	SRB	JSG
F	ISSUED FOR DESIGN	16/12/05	RRB		FWS	JDS
E	ISSUED FOR INTEGRATION - OFF-GAS SYSTEM REVISED	14/11/05	RRB		FWS	JDS
D	REISSUED FOR CHOM HILL REVIEW/90% REPORT-(AREA 36 ONLY)	26/04/05	RDB	PCF	FWS	SC
C	ISSUED FOR CHOM HILL REVIEW/90% REPORT-(AREA 36 ONLY)	15/03/05	JCH	PCF	FWS	TH
B	ISSUED FOR INTERNAL APPROVAL	21/12/04	JCH	AP	FWS	TH
A	ISSUED FOR REVIEW	29 OCT 04	RDB	AP	FWS	JDS

AMEC DRAWING NO: F-145579-36-V-0006 REV: H

amec

AMEC PROJECT: 145579-FINAL DBVS DESIGN

U.S. DEPARTMENT OF ENERGY
Office of River Protection

BULK VITRIFICATION
OFF-GAS TREATMENT
WET SCRUBBER SKID PLAN

SIZE F | BLDG NO | INDEX NO | DWG NO | REV

SCALE 1/4"=1'-0" | SHEET | OF

NAME	DATE	COMPANY
DRAWN BY RDB	18 OCT 04	AMEC
DESIGNED BY		
CHECKED BY		
LEAD / ENGR. LEAD		
ENGINEERING MANAGER		
PROJECT MANAGER		
DESIGN AUTHORITY		

DRAWING TRACEABILITY LIST

DWG NO	TITLE	REF NUMBER	TITLE
-	-	-	REFERENCES
		NEXT USED ON	

REVISIONS

NO	REV NO	DESCRIPTION	REV DATE	REV BY	CHECKED BY	DATE	COMPANY
-	-	-					

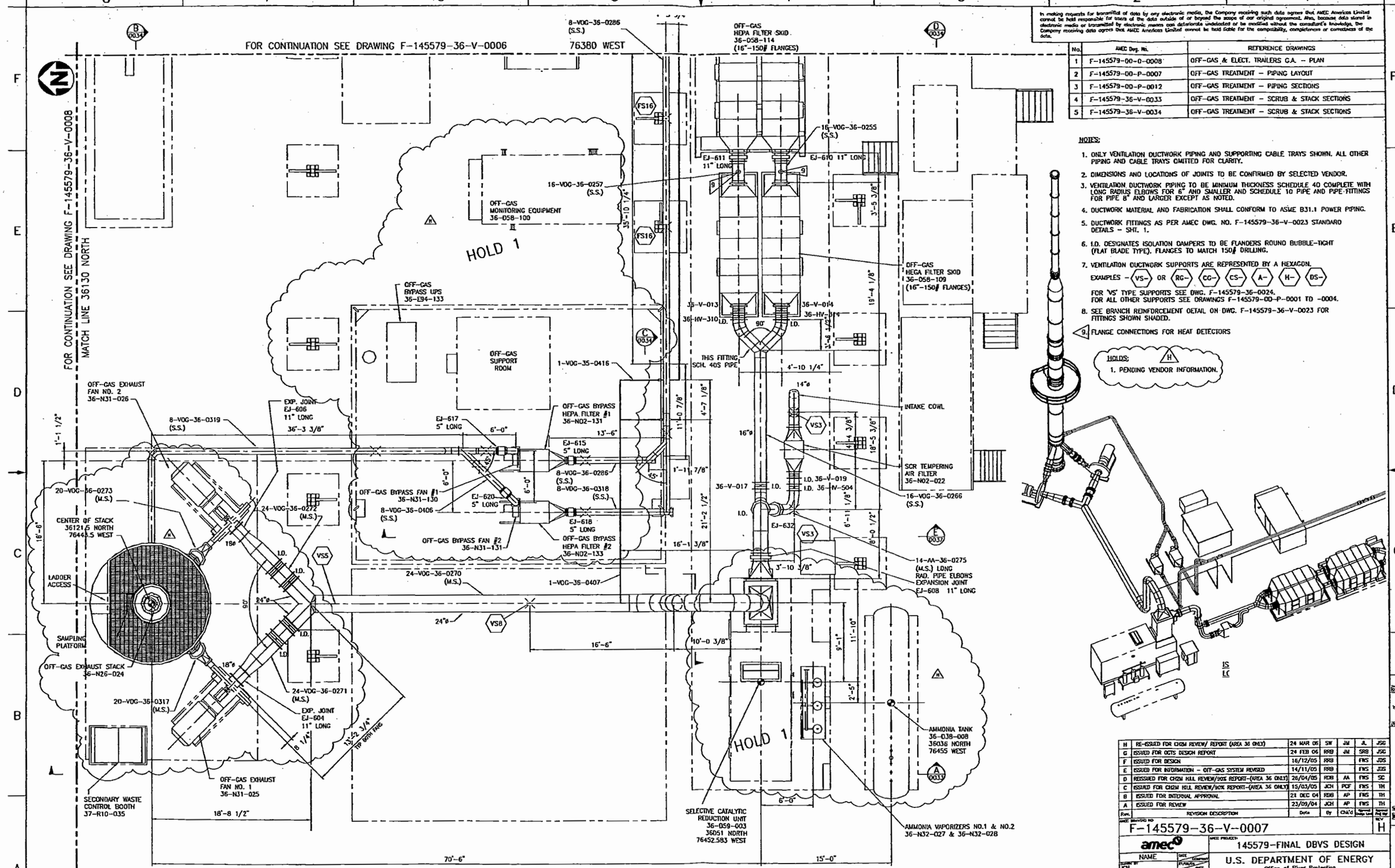

In making requests for transmittal of data by any electronic media, the Company receiving such data agrees that AMEC Americas Limited cannot be held responsible for losses of the data outside of or beyond the scope of our original agreement. Also, because data stored on electronic media or transmitted by electronic means can deteriorate undetected or be modified without the consultant's knowledge, the Company receiving data agrees that AMEC Americas Limited cannot be held liable for the compatibility, completeness or correctness of the data.

No.	AMEC Dwg. No.	REFERENCE DRAWINGS
1	F-145579-00-0-0008	OFF-GAS & ELECT. TRAILERS G.A. – PLAN
2	F-145579-00-P-0007	OFF-GAS TREATMENT – PIPING LAYOUT
3	F-145579-00-P-0012	OFF-GAS TREATMENT – PIPING SECTIONS
4	F-145579-36-V-0033	OFF-GAS TREATMENT – SCRUB & STACK SECTIONS
5	F-145579-36-V-0034	OFF-GAS TREATMENT – SCRUB & STACK SECTIONS

NOTES:

1. ONLY VENTILATION DUCTWORK PIPING AND SUPPORTING CABLE TRAYS SHOWN. ALL OTHER PIPING AND CABLE TRAYS OMITTED FOR CLARITY.
2. DIMENSIONS AND LOCATIONS OF JOINTS TO BE CONFIRMED BY SELECTED VENDOR.
3. VENTILATION DUCTWORK PIPING TO BE MINIMUM THICKNESS SCHEDULE 40 COMPLETE WITH LONG RADIUS ELBOWS FOR 6" AND SMALLER AND SCHEDULE 10 PIPE AND PIPE FITTINGS FOR PIPE 8" AND LARGER EXCEPT AS NOTED.
4. DUCTWORK MATERIAL AND FABRICATION SHALL CONFORM TO ASME B31.1 POWER PIPING.
5. DUCTWORK FITTINGS AS PER AMEC DWG. NO. F-145579-36-V-0023 STANDARD DETAILS – SHT. 1.
6. I.D. DESIGNATES ISOLATION DAMPERS TO BE FLANGERS ROUND BUBBLE-TIGHT (FLAT BLADE TYPE). FLANGES TO MATCH 150# DRILLING.
7. VENTILATION DUCTWORK SUPPORTS ARE REPRESENTED BY A HEXAGON.
   EXAMPLES – VS- OR RG- CG- CS- A- H- DS-
   FOR 'VS' TYPE SUPPORTS SEE DWG. F-145579-36-0024.
   FOR ALL OTHER SUPPORTS SEE DRAWINGS F-145579-00-P-0001 TO -0004.
8. SEE BRANCH REINFORCEMENT DETAIL ON DWG. F-145579-36-V-0023 FOR FITTINGS SHOWN SHADED.

9. FLANGE CONNECTIONS FOR HEAT DETECTORS

HOLDS:
1. PENDING VENDOR INFORMATION.

Rev.	REVISION DESCRIPTION	Date	By	Chk'd	Approved Amec Lead	Approved Client Rep.	REV
H	RE-ISSUED FOR CH2M REVIEW/ REPORT (AREA 36 ONLY)	24 MAR 06	SW	JM	JL	JSG	
G	ISSUED FOR OGTS DESIGN REPORT	24 FEB 06	RRB	JM	SRB	JSG	
F	ISSUED FOR DESIGN	16/12/05	RRB		FWS	JDS	
E	ISSUED FOR INFORMATION – OFF-GAS SYSTEM REVISED	14/11/05	RRB		FWS	JDS	
D	REISSUED FOR CH2M HILL REVIEW/90% REPORT-(AREA 36 ONLY)	26/04/05	RRB	AA	FWS	SC	
C	ISSUED FOR CH2M HILL REVIEW/90% REPORT-(AREA 36 ONLY)	15/03/05	JCH	PCF	FWS	TH	
B	ISSUED FOR INTERNAL APPROVAL	21 DEC 04	RRB	AP	FWS	TH	
A	ISSUED FOR REVIEW	23/09/04	JCH	AP	FWS	TH	

AMEC DRAWING NO: F-145579-36-V-0007 REV: H

amec

AMEC PROJECT: 145579-FINAL DBVS DESIGN

U.S. DEPARTMENT OF ENERGY
Office of River Protection

BULK VITRIFICATION
OFF-GAS TREATMENT
SCRUB & STACK PLAN

NAME	DATE	COMPANY
DRAWN BY JCH	21/09/04	AMEC
DESIGNED BY		
CHECKED BY		
DESIGN / AREA LEAD		
ENGINEERING MANAGER		
PROJECT MANAGER		
DESIGN AUTHORITY		

SIZE F | SCALE 1/4"=1' | SHEET OF

DWG NO	TITLE
–	

DRAWING TRACEABILITY LIST

REF NUMBER	TITLE	REFERENCES	NEXT USED ON
–			

REV NO	DESCRIPTION	REV BY (INIT)	REV BY	CHECKED BY	DATE	COMPANY
–						

REVISIONS

RPP-24544
REV 1d

In making requests for transmittal of data by any electronic media, the Company receiving such data agrees that AMEC Americas Limited cannot be held responsible for users of the data outside of or beyond the scope of our original agreement. Also, because data stored in electronic media or transmitted by electronic means can deteriorate undetected or be modified without the consultant's knowledge, the Company receiving data agrees that AMEC Americas Limited cannot be held liable for the compatibility, completeness or correctness of the data.

No.	AMEC Dwg. No.	REFERENCE DRAWINGS
1	F-145579-36-V-0035	OFF-GAS TREATMENT – SECONDARY WASTE AREA SECTION 'A'
2	F-145579-00-D-0005	SECONDARY WASTE AREA G.A. – PLAN
3	F-145579-00-D-0016	SECONDARY WASTE AREA G.A. – SECTIONS
4	F-145579-00-P-0008	SECONDARY WASTE STORAGE – PIPING LAYOUT
5	F-145579-00-P-0013	SECONDARY WASTE STORAGE – PIPING SECTIONS

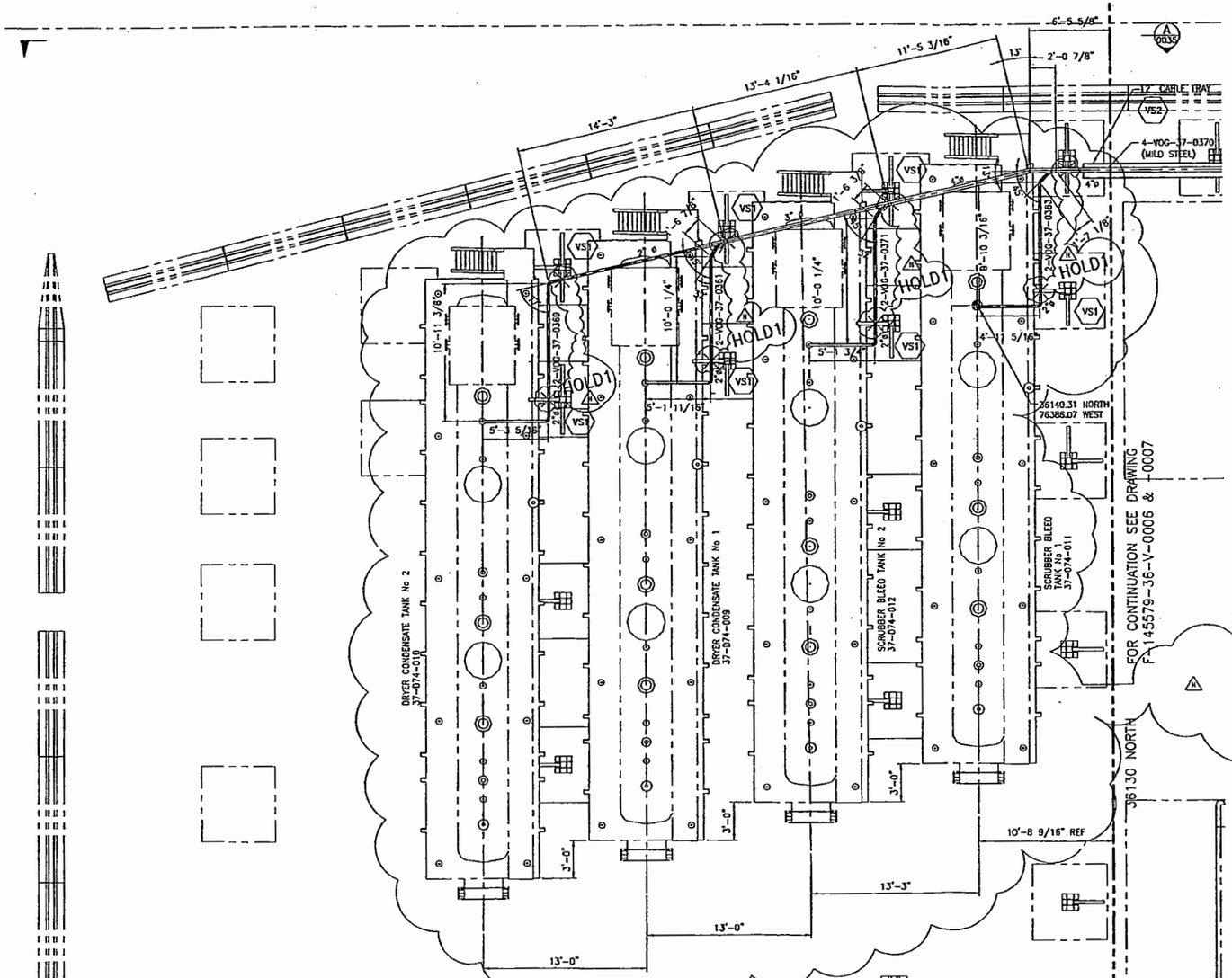

NOTES:

1. ONLY VENTILATION DUCTWORK PIPING AND SUPPORTING CABLE TRAYS SHOWN. ALL OTHER PIPING AND CABLE TRAYS OMITTED FOR CLARITY.
2. DIMENSIONS AND LOCATIONS OF JOINTS TO BE CONFIRMED BY SELECTED VENDOR.
3. VENTILATION DUCTWORK PIPING TO BE MINIMUM THICKNESS SCHEDULE 40 COMPLETE WITH LONG RADIUS ELBOWS FOR 6" AND SMALLER AND SCHEDULE 10 PIPE AND PIPE FITTINGS FOR PIPE 8" AND LARGER EXCEPT AS NOTED.
4. DUCTWORK MATERIAL AND FABRICATION SHALL CONFORM TO ASME B31.1 POWER PIPING.
5. DUCTWORK FITTINGS AS PER AMEC DWG. NO. F-145579-36-V-0023 STANDARD DETAILS – SHT. 1.
6. I.D. DESIGNATES ISOLATION DAMPERS TO BE FLANDERS ROUND BUBBLE-TIGHT (FLAT BLADE TYPE). FLANGES TO MATCH 150# DRILLING.
7. VENTILATION DUCTWORK SUPPORTS ARE REPRESENTED BY A HEXAGON.
   EXAMPLES – VS– OR RG– CG– CS– A– H– DS–
   FOR 'VS' TYPE SUPPORTS SEE DWG. F-145579-36-0024.
   FOR ALL OTHER SUPPORTS SEE DRAWINGS F-145579-00-P-0001 TO -0004.
8. SEE BRANCH REINFORCEMENT DETAIL ON DWG. F-145579-36-V-0023 FOR FITTINGS SHOWN SHADED.

HOLD1: STRUCTURAL STEEL FOR PIPE RACKS TO BE MODIFIED TO MATCH OFF-GAS VENT LINE MODIFICATIONS

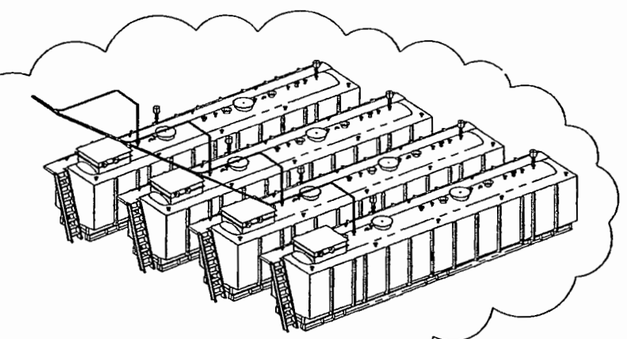

ISOMETRIC VIEW
LOOKING SOUTHWEST

NOT APPROVED FOR CONSTRUCTION

Rev.	REVISION DESCRIPTION	Date	By	Ch'd	Approved	Approved Date
H	ISSUED FOR CH2M APPROVAL AND 90% DESIGN REPORT	19 MAR 06	THB	JU	JL	JJ
G	ISSUED FOR OCTS DESIGN REPORT	24 FEB 06	RRB	JU	SRB	JSG
F	ISSUED FOR DESIGN	16 DEC 05	RRB		FWS	JDS
E	REISSUED FOR CH2M HILL REVIEW/90% REPORT (AREA 36 ONLY)	26 APR 05	RDB	PCF	FWS	SC
D	ISSUED FOR CH2M HILL REVIEW/90% REPORT (AREA 36 ONLY)	15 MAR 05	RDB	PCF	FWS	TH
C	ISSUED FOR CH2M HILL REVIEW/90% REPORT (AREA 37 ONLY)	09 FEB 05	RDB	PCF	FWS	TH
B	ISSUED FOR INTERNAL APPROVAL	13 DEC 04	RDB	AP	FWS	TH
A	ISSUED FOR REVIEW	18 OCT 04	RDB	AP	FWS	JDS

AMEC DRAWING NO: F-145579-36-V-0008 REV H

amec

AMEC PROJECT: 145579-FINAL DBVS DESIGN

U.S. DEPARTMENT OF ENERGY
Office of River Protection

BULK VITRIFICATION
OFF-GAS TREATMENT
SECONDARY WASTE AREA PLAN

NAME	DATE	COMPANY
DRAWN BY RDB		
CHECKED BY		
CHECKED BY		
DESIGN / AREA LEAD		
CHANGE/DISC MANAGER		
PROJECT MANAGER		
DESIGN AUTHORITY		

SIZE F | BLDG NO | AREA NO | DWG NO | REV
SCALE | EDT | SHEET OF

DWG NO	TITLE	REF NUMBER	TITLE
–		–	

DRAWING TRACEABILITY LIST — REFERENCES — NEXT USED ON

REV NO	REV NO	DESCRIPTION	REV BY	REV BY	CHECKED BY	CHCK	COMPANY
–							

REVISIONS

In making requests for transmittal of data by any electronic media, the Company receiving such data agrees that AMEC Americas Limited cannot be held responsible for errors of the data outside of or beyond the scope of our original agreement. Also, because data stored in electronic media or transmitted by electronic means can deteriorate undetected or be modified without the consultant's knowledge, the Company receiving data agrees that AMEC Americas Limited cannot be held liable for the compatibility, completeness or correctness of the data.

No.	AMEC Dwg. No.	REFERENCE DRAWINGS
1	F-145579-36-V-0005	OFF-GAS TREATMENT – MELT AND DRYER UPPER PLAN
2	F-145579-36-V-0027	OFF-GAS TREATMENT – MELT AND DRYER SECTIONS 'A' & 'B'
3	F-145579-36-V-0028	OFF-GAS TREATMENT – MELT AND DRYER SECTION 'C'
4	F-145579-36-V-0029	OFF-GAS TREATMENT – MELT AND DRYER SECTION 'D'
5	F-145579-36-V-0030	OFF-GAS TREATMENT – MELT AND DRYER SECTION 'E'

NOZZLE No.	SERVICE	SIZE	TYPE
N1	GAS INLET	10"	ANSI 150# RFSO FLANGE
N2	GAS OUTLET	10"	ANSI 150# RFSO FLANGE
N3	DUST OUTLET	6"	ANSI 150# RFSO FLANGE
N4a/h	RESERVOIR PJ OUTLET	1.5"	ANSI 150# RFSO FLANGE
N5a/h	HEAD PJ INLET	1.5"	ANSI 150# RFSO FLANGE
N6	SAMPLE PORT	2"	ANSI 150# RFSO FLANGE
N7	SAMPLE PORT	0.75"	3000LB NPT FEMALE HALF COUPLING
N8	PRESSURE TAPPING	1"	3000LB NPT FEMALE HALF COUPLING
N9	PRESSURE TAPPING	1"	3000LB NPT FEMALE HALF COUPLING
N10	RESERVOIR GAS INLET	1"	3000LB NPT FEMALE HALF COUPLING
N11	FLOOD WASH INLET	1.5"	ANSI 150# RFSO FLANGE c/w BLIND FLANGE
N12	SPRAY WASH INLET	1"	ANSI 150# RFSO FLANGE
N13	RESERVOIR PRESSURE TAPPING	1"	3000LB NPT FEMALE HALF COUPLING c/w PLUG
N14	RESERVOIR DRAIN	0.5"	3000LB NPT FEMALE HALF COUPLING c/w PLUG

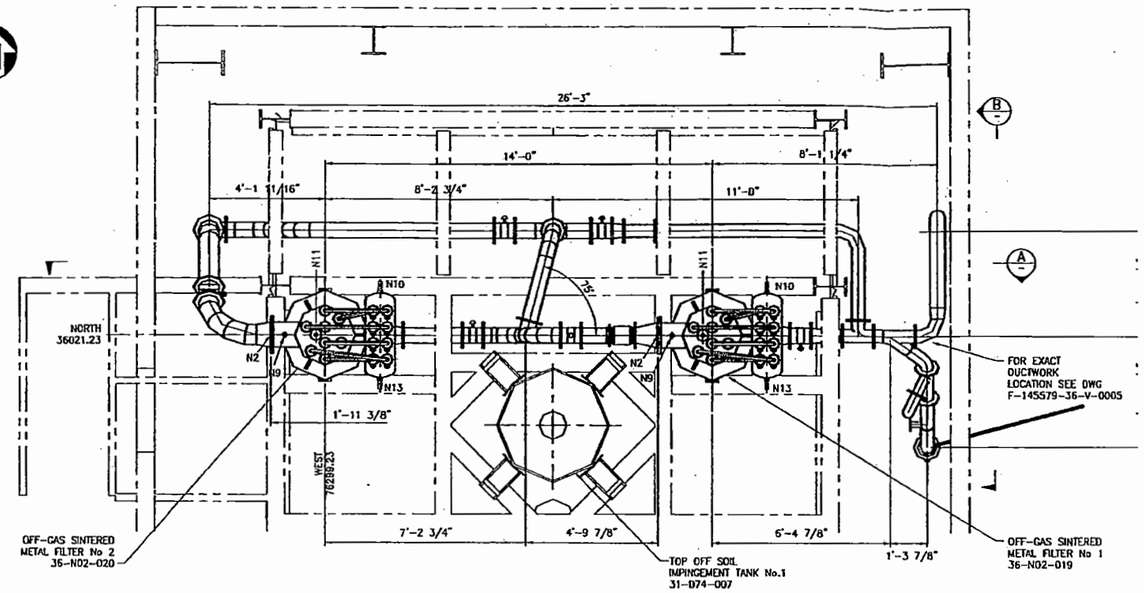

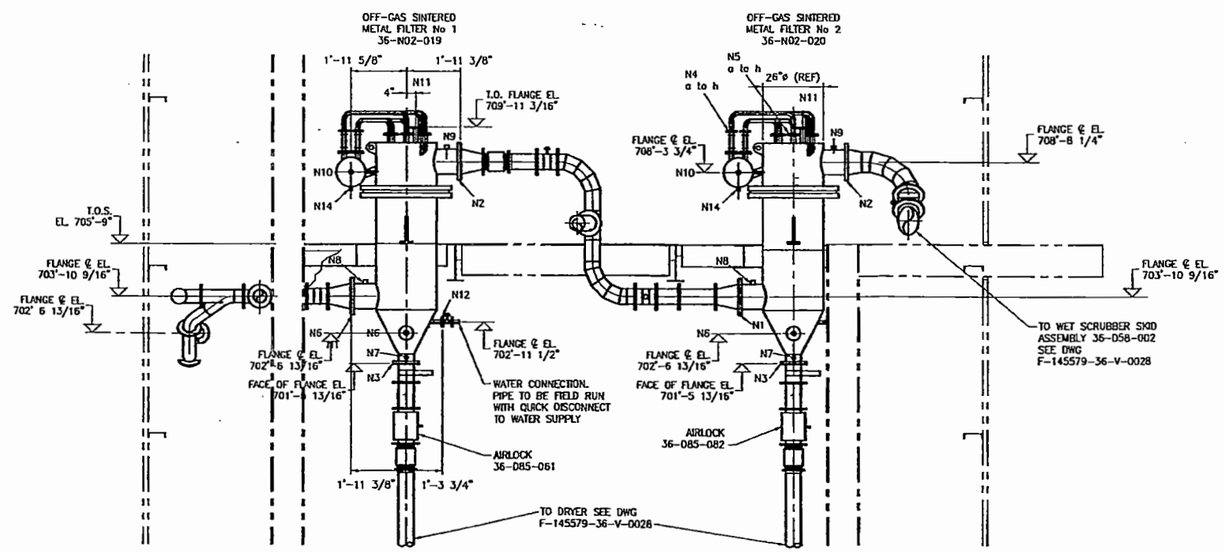

SECTION (A) 1/2"=1'-0"

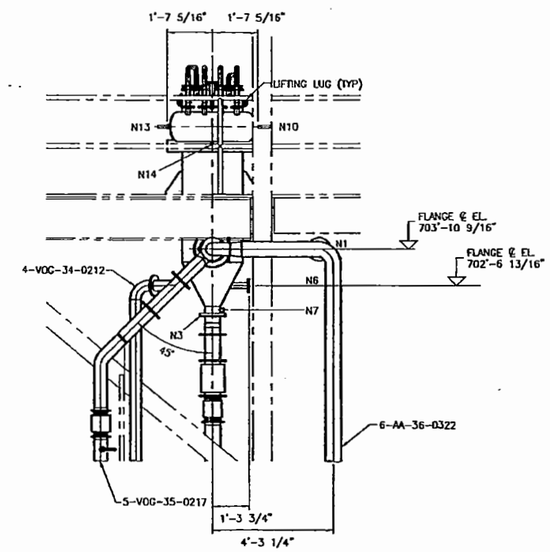

SECTION (B) 1/2"=1'-0" CLADDING NOT INDICATED FOR CLARITY

Rev.	REVISION DESCRIPTION	Date	By	Chk'd	Approved Design Lead	Approved Proj. Eng.	DWG NO
G	RE-ISSUED FOR OGTS DESIGN REPORT	24 MAR 06	SW	JM	JL	JGC	
F	ISSUED FOR OGTS DESIGN REPORT	24 FEB 06	RRB	JM	SRB	JGC	
E	REISSUED FOR CHON HILL REVIEW/SUDX REPORT (AREA 36 ONLY)	27 APR 05	RDB	PCF	FWS	SC	
D	ISSUED FOR CHON HILL REVIEW/SUDX REPORT (AREA 36 ONLY)	15 MAR 05	RDB	PCF	FWS	TH	
C	ISSUED FOR CHON HILL REVIEW/SUDX REPORT (EIV SYSTEM)	02 MAR 05	RDB	PCF	GJ	TH	
B	ISSUED FOR INTERNAL APPROVAL	08 DEC 04	RDB	AP	GJ	GJ	
A	ISSUED FOR REVIEW	26 NOV 04	RDB	AP	FWS	JGS	

AMEC DRAWING NO: F-145579-36-V-0016 REV: G

amec

AMEC PROJECT: 145579-FINAL DBVS DESIGN

U.S. DEPARTMENT OF ENERGY
Office of River Protection

BULK VITRIFICATION SINTERED METAL FILTERS DETAILS

NAME	DATE
DRAWN BY RDB	26 NOV 04
DESIGNED BY	
CHECKED BY	
DESIGN / AREA LEAD	
ENGINEERING MANAGER	
PROJECT MANAGER	
DESIGN AUTHORITY	

SIZE F | BLDG NO | WBS NO | DWG NO | REV

SCALE 1/2"=1'-0" | DSF | SHEET | OF

DWG NO	TITLE	REF NUMBER	TITLE
–	DRAWING TRACEABILITY LIST	NEXT USED ON	REFERENCES

AFD REV.	REV. BY	DESCRIPTION	REV BY DATE	REV BY	CHECKED BY	CHK'R	COMPANY
–	–	REVISIONS					

In making requests for transmittal of data by any electronic media, the Company receiving such data agrees that AMEC Americas Limited cannot be held responsible for users of the data outside of or beyond the scope of our original agreement. Also, because data stored in electronic media or transmitted by electronic means can deteriorate undetected or be modified without the consultant's knowledge, the Company receiving data agrees that AMEC Americas Limited cannot be held liable for the compatibility, completeness or correctness of the data.

No.	AMEC Dwg. No.	REFERENCE DRAWINGS
1	F-145579-36-V-0007	OFF-GAS TREATMENT – SCRUB & STACK PLAN

NOZZLE No.	SERVICE	SIZE	TYPE
NA	PRIMARY AMMONIA FEED	2"	ANSI 150# RF FLANGE
NB	POLISHING AMMONIA FEED	1"	ANSI 150# RF FLANGE
T1	COOL AIR INLET	40"x35"	FABRICATED BY VENDOR
T2	COOL AIR OUTLET	40"x35"	FABRICATED BY VENDOR
T3	HOT AIR INLET	54"x40"	FABRICATED BY VENDOR
T4	HOT AIR OUTLET	54"x40"	FABRICATED BY VENDOR

NOTE.

FOR CONTINUATION OF DUCTWORK SEE DWG F-145579-36-V-0007

HOLDS:
1. PENDING VENDOR INFORMATION.

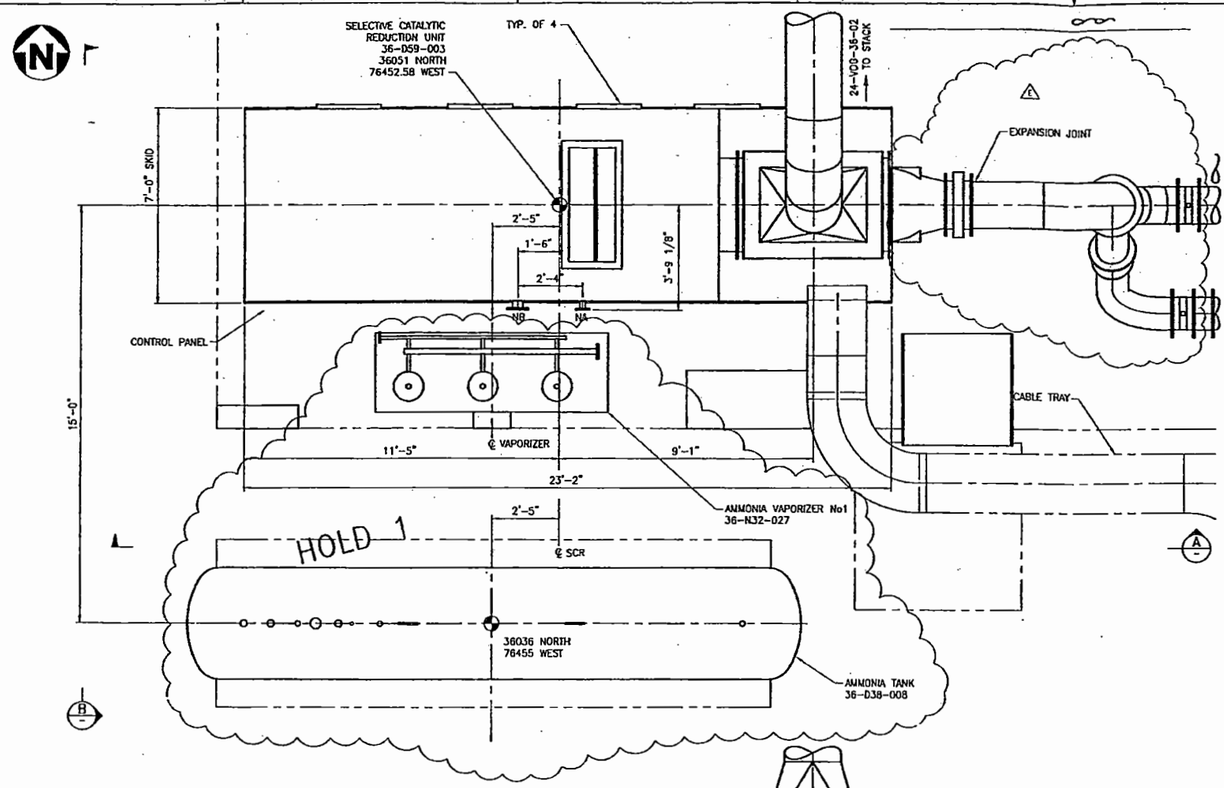

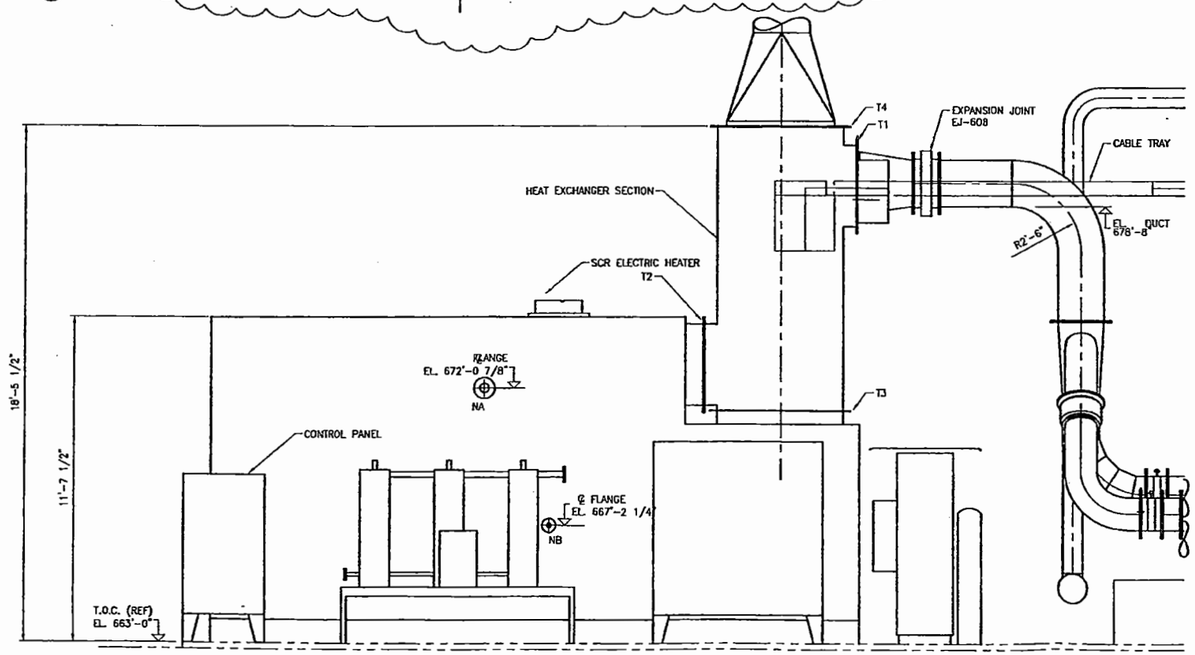

SECTION A
1/2"=1'-0"

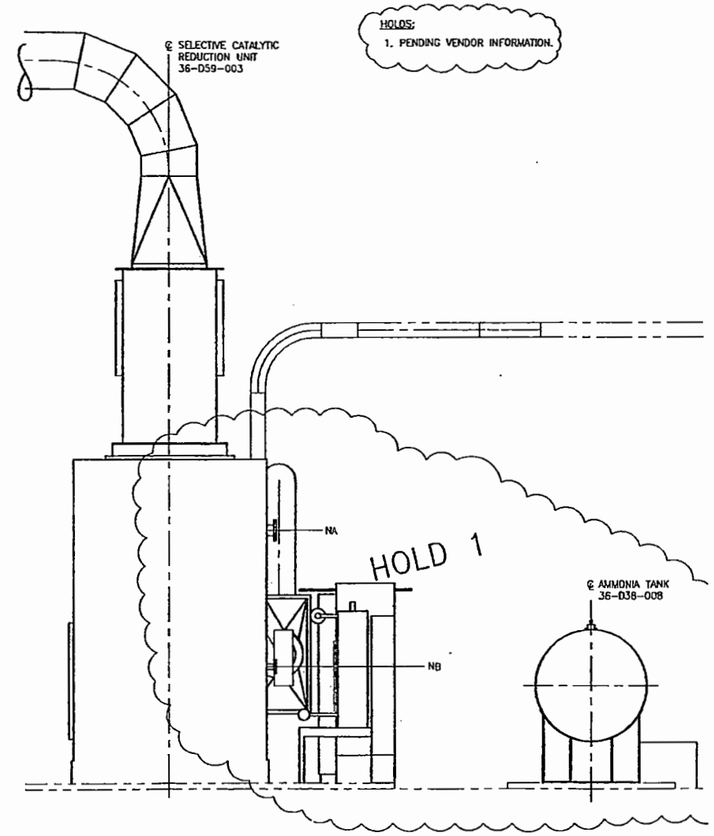

VIEW B
1/2"=1'-0"

Rev.	REVISION DESCRIPTION	Date	By	Chk'd	Approved Design Lead	Approved Proj Mgr
E	ISSUED FOR CH2M HILL REVIEW/ REPORT (AREA 36 ONLY)	25 MAR 06	THB	JM	JL	JSG
D	REISSUED FOR CH2M HILL REVIEW/90% REPORT (AREA 36 ONLY)	26 APR 05	RDB	AA	FWS	SC
C	ISSUED FOR CH2M HILL REVIEW/90% REPORT (AREA 36 ONLY)	15 MAR 05	RDB	PCF	FWS	TH
B	ISSUED FOR INTERNAL APPROVAL	13 JAN 05	RDB	AP	FWS	TH
A	ISSUED FOR REVIEW	26 NOV 04	RDB	AP	FWS	JOS

AMEC DRAWING NO F-145579-36-V-0019 REV E

amec

AMEC PROJECT: 145579-FINAL DBVS DESIGN

U.S. DEPARTMENT OF ENERGY
Office of River Protection

BULK VITRIFICATION
OFF-GAS TREATMENT
SCR & AMMONIA FEED DETAILS

NAME	DATE	COMPANY
DRAWN BY RDB	13 NOV 04	AMEC
REVIEWED BY		
CHECKED BY		
DESIGN / AREA LEAD		
LICENSING MANAGER		
PROJECT MANAGER		
DESIGN AUTHORITY		

SIZE F | BLDG NO | BDGS NO | DWG NO | REV
SCALE 1/2"=1'-0" | CH | SHEET OF

DWG NO	TITLE	REF NUMBER	TITLE
		REFERENCES	
DRAWING TRACEABILITY LIST		NEXT USED ON	

WO	REV NO	DESCRIPTION	REV BY DATE	REV BY	CHECKED BY	ENGR	COMPANY
REVISIONS							

RPP-24544
REV 1d

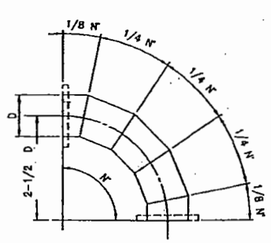

OVER 67.5° BENDS UP TO 90°
BENDS 4"ø TO 6"ø – 5
SECTIONS

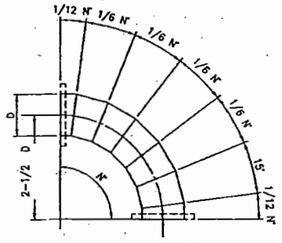

OVER 67.5° BENDS UP TO 90°
BENDS OVER 6"ø – 7
SECTIONS

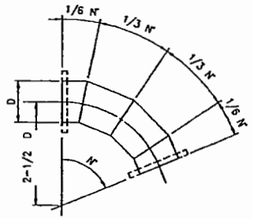

OVER 30° BENDS UP TO
67.5° BENDS – 4 SECTIONS

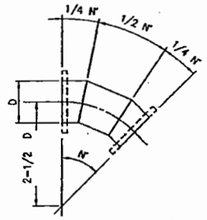

OVER 15° BENDS UP TO
30° BENDS – 3 SECTIONS

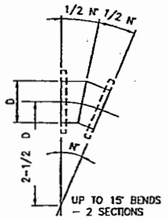

UP TO 15° BENDS
– 2 SECTIONS

NOTES:

1. CENTERLINE RADIUS 2-1/2 TIMES THE NOMINAL DIAMETER OF PIPE FOR PROCESS VENTILATION DUCTING. MAXIMUM SECTION ANGLE 22-1/2°.
2. FLANGES SHOWN AT MINIMUM DISTANCE FROM ELBOW.
3. EXTRA STRAIGHT LENGTH MAY BE ADDED.
4. LONG RADIUS PIPE ELBOWS (CENTERLINE RADIUS 1 1/2 TIMES THE NOMINAL PIPE DIAMETER) SHALL BE USED FOR TANK VENT LINES AND OUTSIDE AIR INTAKES.

CIRCULAR DUCT ELBOW CONSTRUCTION 4"ø AND GREATER.
UP TO 3"ø USE LONG RADIUS PIPE ELBOWS

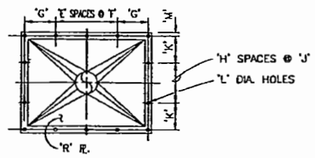

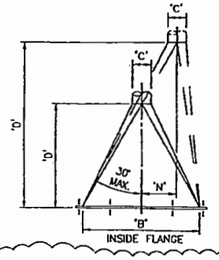

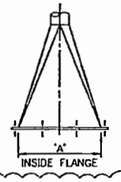

RECT. SIZE A x B	DUCT O.D. C	DIMENSION D	E	F	G	H	J	K	L	M	N	P	Q	R	NO. OF BOLTS
-	-	-	-	-	-	-	-	-	-	-	-	-	-	-	-

HOLD FOR EQUIPMENT INFORMATION

RECTANGULAR TO ROUND TRANSITION

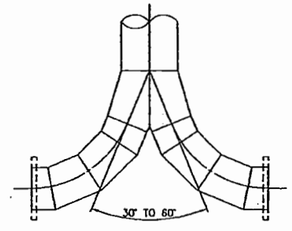

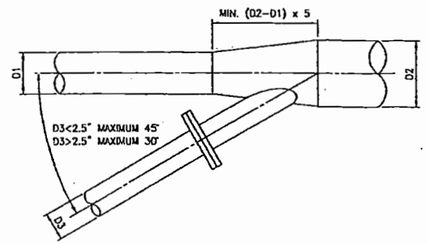

BRANCH ENTRY

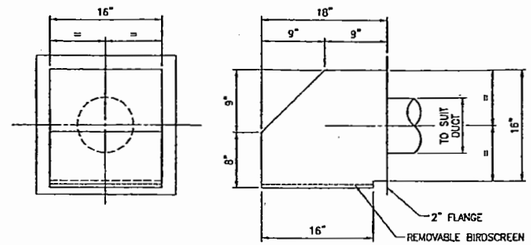

AIR INTAKE HOOD

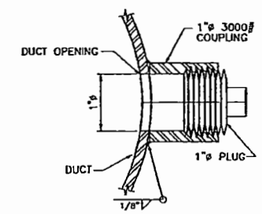

TESTING PORT

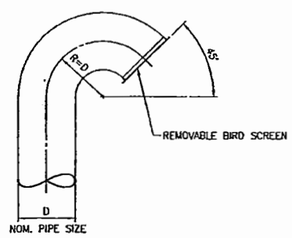

INTAKE COWL

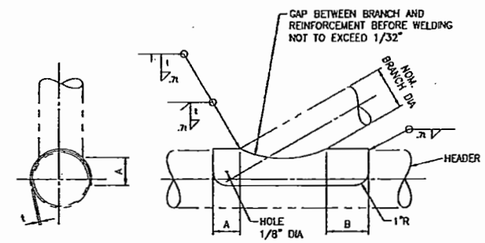

BRANCH REINFORCEMENT

NOM. BRANCH DIA	6"	8"	4"	10"	20"
A	2 1/2"	2 1/2"	2"	3"	4"
B	3 1/2"	3 1/2"	3"	4 1/2"	7 1/2"
t	MATCH HEADER THICKNESS		MATCH BRANCH THICKNESS		

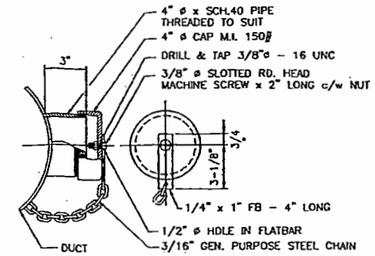

SAMPLE PORT

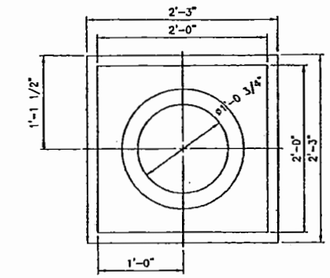

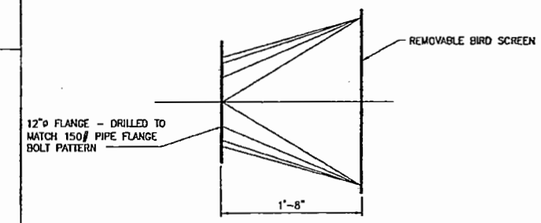

AIR INTAKE HOOD

FOR 36-N02-093
HEPA FEED TEMPERING
AIR FILTER

EXPANSION JOINT SCHEDULE

ITEM No.	MANUFACTURER (OR APPROVED EQUAL)	PART NUMBER	RATED STIFFNESS AX. (lbs/in)	LAT. (lbs/in)	TORS. (in-lbs/deg)
EJ1	SENCOR FLEX. PATH	4-AUD-FF-25-26 5/8-L-316	266	7	13000
EJ2	SENCOR FLEX. PATH	6-AUD-FF-25-27 1/8-L-316	316	21	40000
EJ3	SENCOR FLEX. PATH	4-AUD-FF-25-26 5/8-L-316	266	7	13000
EJ4	SENCOR FLEX. PATH	4-AUD-FF-25-26 5/8-L-316	266	7	13000
EJ5	SENCOR FLEX. PATH	8-AS-FF-50-20-L-304	266	7	13000
EJ6	SENCOR FLEX. PATH	8-AS-FF-50-20-L-304	266	7	13000
EJ7	SENCOR FLEX. PATH	20-AS-FF-50-12-L-304	266	7	13000
EJ8	SENCOR FLEX. PATH	10-AS-FF-50-8-L-304	266	7	13000
EJ9	SENCOR FLEX. PATH	10-AS-FF-50-16-L-304	266	7	13000
EJ10	SENCOR FLEX. PATH	12-AS-FF-50-15-L-304	266	7	13000
EJ11	SENCOR FLEX. PATH	12-AS-FF-50-15-L-304	266	7	13000
EJ12	SENCOR FLEX. PATH	22-AS-FF-50-12-L-304	266	7	13000
EJ13	SENCOR FLEX. PATH	22-AS-FF-50-12-L-304	266	7	13000

NOTE. FLANGE AND PIPE SPOOL MATERIAL TO MATCH CONNECTING PIPE

HOLD

UNDER REVIEW

DWG NO	TITLE	BBE NUMBER	TITLE
			REFERENCES
DRAWING TRACEABILITY LIST		NEXT USED ON	

REV NO	DESCRIPTION	REV BY DATE	REV BY	CHECKED BY	CHECK	COMPANY
REVISIONS						

NOT APPROVED FOR CONSTRUCTION

Rev.	REVISION DESCRIPTION	Date	By	Chk'd	Appvd Supp Cust	Appvd Proj Mgr
E	ISSUED FOR DOE REVIEW / REPORT (AREA 36 ONLY)	25 MAR 06	SW	JM	JL	JSD
D	ISSUED FOR DOE'S DESIGN REPORT	24 FEB 06	RRB	JM	SRB	JSD
C	ISSUED FOR DOE HQ REVIEW/90% REPORT (AREA 36 ONLY)	15 MAR 05	RDB	PCF	FWS	TH
B	ISSUED FOR INTERNAL APPROVAL	31 JAN 05	RDB	AP	FWS	TH
A	ISSUED FOR REVIEW	10/11/04	JCH	AP	CJ	TH

AMEC DRAWING NO: F-145579-36-V-0023 REV: E

amec

AMEC PROJECT: 145579-FINAL DBVS DESIGN

NAME	DATE	COMPANY / AMEC
DRAWN BY JCH	09/11/04	
DESIGNED BY		
CHECKED BY		
DESIGN / AREA LEAD		
DISCIPLINE MANAGER		
PROJECT MANAGER		
DESIGN AUTHORITY		

U.S. DEPARTMENT OF ENERGY
Office of River Protection

BULK VITRIFICATION
OFF-GAS TREATMENT
STANDARD DETAILS-SHT.1

SIZE F | BLDG NO | AREA NO | DWG NO | REV
SCALE N.T.S. | CDE | SHEET | OF

In making requests for transmittal of data by any electronic media, the Company receiving such data agrees that AMEC Americas Limited cannot be held responsible for users of the data outside of or beyond the scope of our original agreement. Also, because data stored in electronic media or transmitted by electronic means can deteriorate undetected or be modified without the consultant's knowledge, the Company receiving data agrees that AMEC Americas Limited cannot be held liable for the compatibility, completeness or correctness of the data.

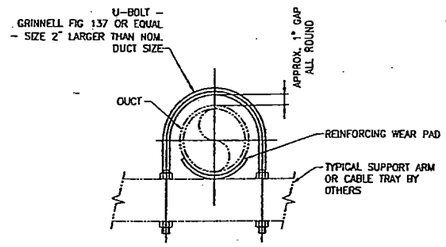

TYPICAL DUCT SUPPORT WITH CLAMPED GUIDE

VS1

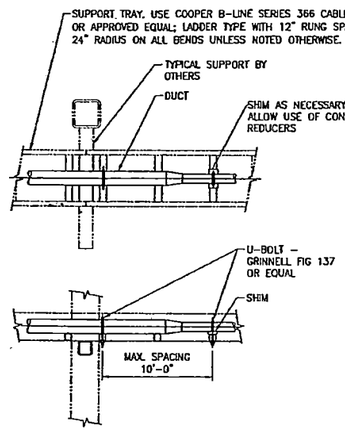

TYPICAL DUCT SUPPORT ON CABLE TRAY

VS2

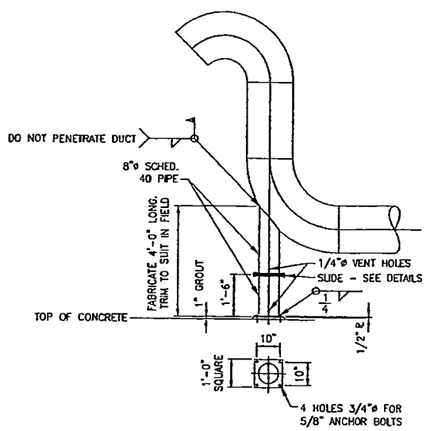

INTAKE SUPPORT
1/2"=1'-0"

VS3

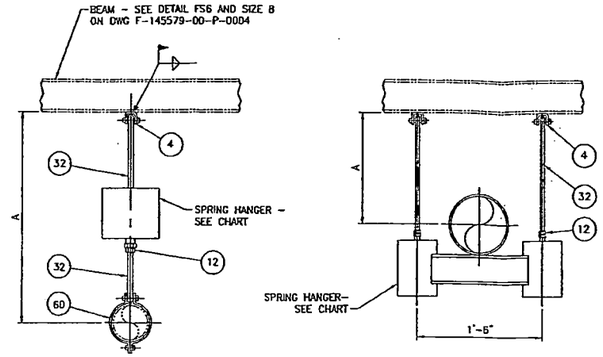

TYPICAL DUCT SUPPORT WITH SPRING HANGER TYPE A

TYPICAL DUCT SUPPORT WITH SPRING HANGER TYPE G

VS4

SUPPORT NUMBER	A	SPRING HANGER (GRINNELL OR EQUAL)			LOAD (LBS)	
		FIG	TYPE	SIZE	COLD	HOT
VS4.1	14 3/16"	82	G	3	161	187
VS4.2	14 3/16"	82	G	7	543	601
VS4.3	37 15/16"	98	A	5	291	358
VS4.4	16 13/16"	82	G	5	255	284
VS4.5	40 5/32"	98	A	3	178	203
VS4.6	16 13/16"	82	C	6	318	399

11 25/32"

NOTES:

1. SEE DWG F-145579-00-P-0003 FOR DETAILS OF NUMBERED ITEMS.
2. PIPE CLAMP (ITEM 60) TO BE SIMILAR MATERIAL TO DUCT.

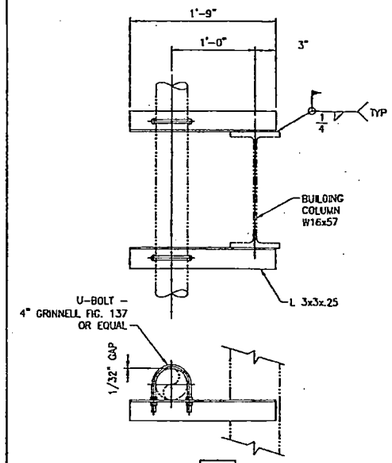

VS6

NOTE. WHERE S.S. DUCTING IS CLAMPED, WRAP CLAMP WITH 1/8" THERMOFAB CLOTH LINER BY ALBION INDUSTRIAL PRODUCTS.

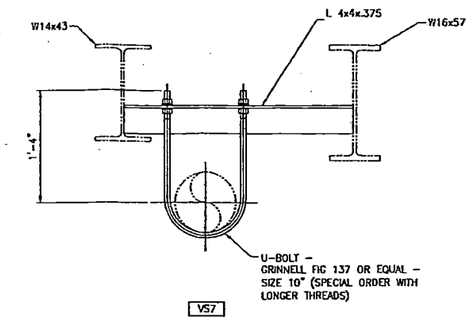

VS7

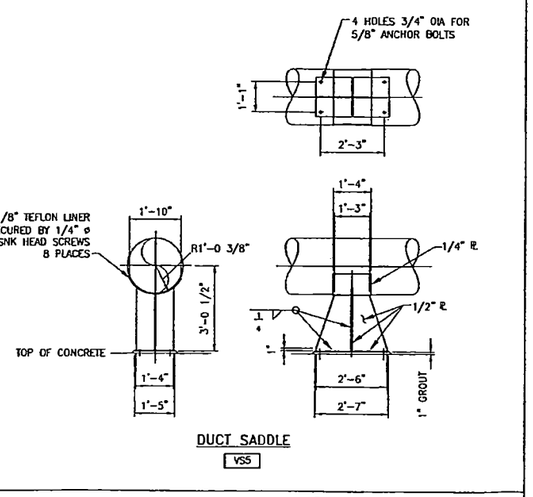

DUCT SADDLE

VS5

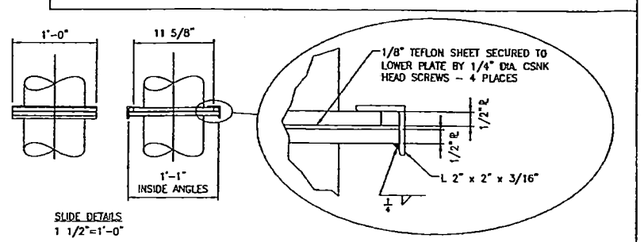

SLIDE DETAILS
1 1/2"=1'-0"

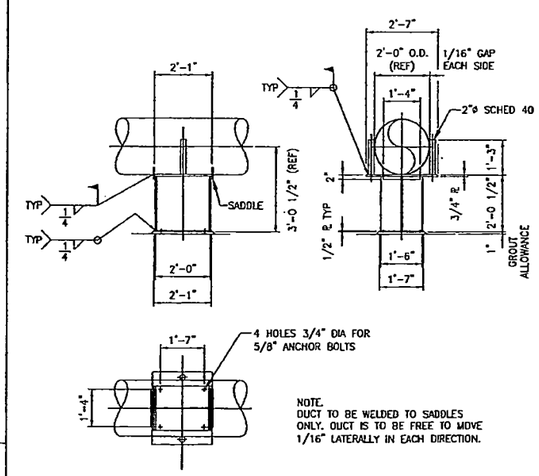

NOTE.
DUCT TO BE WELDED TO SADDLES ONLY. DUCT IS TO BE FREE TO MOVE 1/16" LATERALLY IN EACH DIRECTION.

LIMIT STOP

VS8

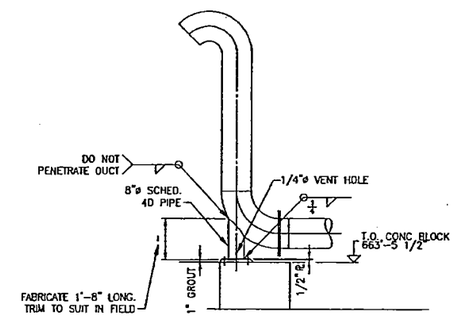

VS9
1/2"=1'-0"

NOT APPROVED FOR CONSTRUCTION

Rev.	REVISION DESCRIPTION	Date	By	Ch'k'd	Approved Design Lead	Approved Proj Eng
D	ISSUED FOR OGTS DESIGN REPORT	24 FEB 06	RRB	JM	SRB	JSG
C	ISSUED FOR CACON HILL REVIEW/30% REPORT (AREA 36 ONLY)	15 MAR 05	RDB	PCF	FWS	TH
B	ISSUED FOR INTERNAL APPROVAL	31 JAN 05	RDB	AP	FWS	TH
A	ISSUED FOR REVIEW	13 JAN 05	RDB	AP	FWS	TH

AMEC DRAWING NO: F-145579-36-V-0024 REV: F

amec

AMEC PROJECT: 145579-FINAL DBVS DESIGN

U.S. DEPARTMENT OF ENERGY
Office of River Protection

BULK VITRIFICATION OFF-GAS TREATMENT DUCT SUPPORT DETAILS

NAME	DATE	COMPANY
DRAWN BY		
DESIGNED BY		
CHECKED BY		
DESIGN / DISC. LEAD		
CONSTRUCTION MANAGER		
PROJECT MANAGER		
DESIGN AUTHORITY		

SIZE F | BLDG NO | SHEET NO | DWG NO | REV
SCALE NTS | CUT | SHEET OF

DWG NO	TITLE
–	

DRAWING TRACEABILITY LIST

REF NUMBER	TITLE
–	

REFERENCES
NEXT USED ON

REV NO	DESCRIPTION	REV BY DATE	REV BY	CHECKED BY	CHK'D COMPANY
–					

REVISIONS

In making requests for transmittal of data by any electronic media, the Company receiving such data agrees that AMEC Americas Limited cannot be held responsible for users of the data outside of or beyond the scope of our original agreement. Also, because data stored in electronic media or transmitted by electronic means can deteriorate undetected or be modified without the consultant's knowledge, the Company receiving data agrees that AMEC Americas Limited cannot be held liable for the compatibility, completeness or correctness of the data.

No.	AMEC Dwg. No.	REFERENCE DRAWINGS
1	F-145579-36-V-0001	OFF-GAS TREATMENT – PLAN

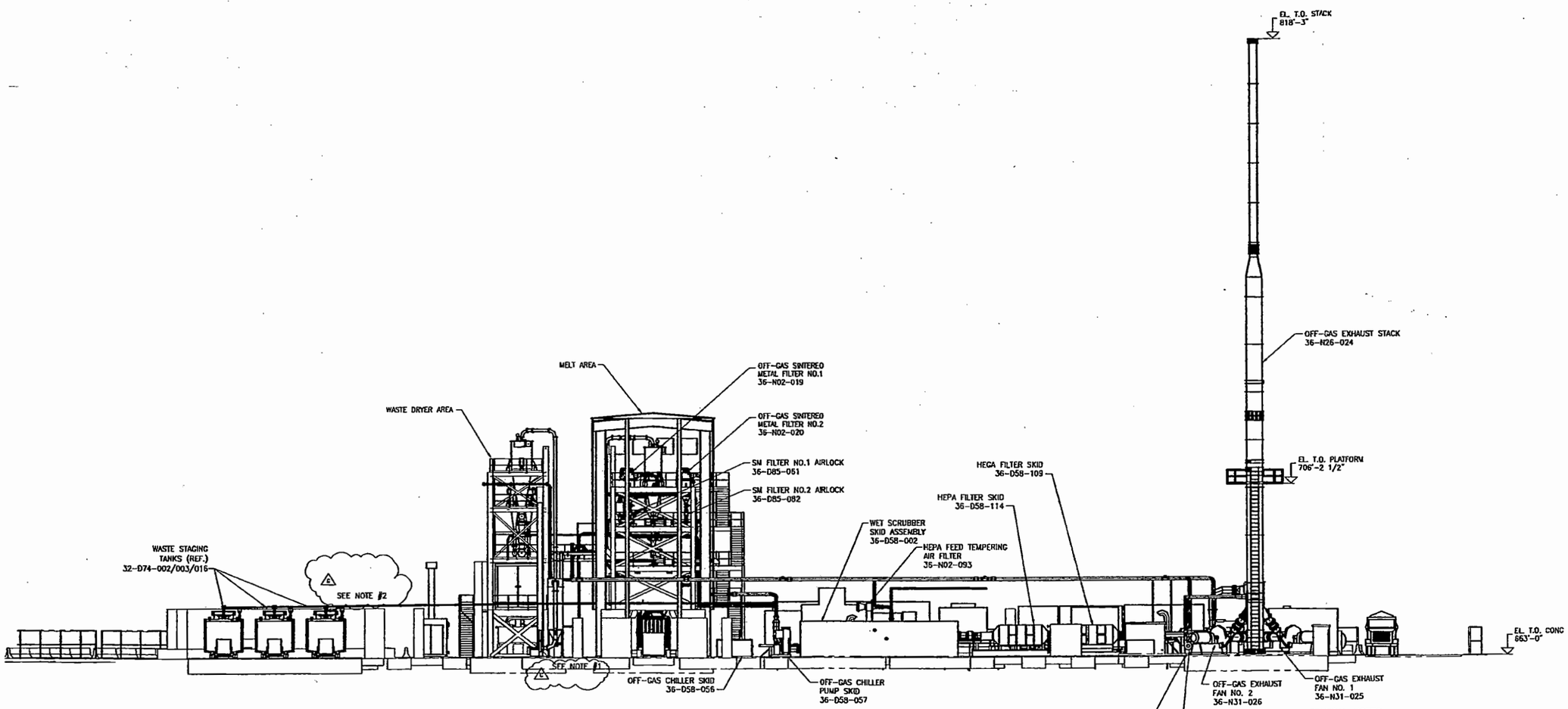

SECTION A (0001)

GENERAL NOTES:

1. NORTH WALLS OF MELT AREA WEATHER ENCLOSURE AND DRYER AREA NOT SHOWN.
2. SKY SHINE SHIELDING STRUCTURE NOT SHOWN FOR CLARITY.

Rev.	REVISION DESCRIPTION	Date	By	Ch'd	Approved Project Lead	Approved Dwg Ctl Rev
G	ISSUED FOR CH2M REVIEW/ REPORT (AREA 36 ONLY)	25 MAR 06	THB	JM	JL	JSG
F	ISSUED FOR OGTS DESIGN REPORT	24 FEB 06	RRB	JM	SRB	JSG
E	ISSUED FOR DESIGN	16 DEC 05	RRB		FWS	JDS
D	REISSUED FOR CH2M HILL REVIEW/BOX REPORT (AREA 36 ONLY)	28 APR 05	RDB	PCF	FWS	SC
C	ISSUED FOR CH2M HILL REVIEW/BOX REPORT (AREA 36 ONLY)	15/03/05	RDB	PCF	FWS	TH
B	ISSUED FOR INTERNAL APPROVAL	22/12/04	JCH	AP	FWS	TH
A	ISSUED FOR REVIEW	10/11/04	JCH	AP	CJ	TH

AMEC DRAWING NO: F-145579-36-V-0025 REV: G

amec

AMEC PROJECT: 145579-FINAL DBVS DESIGN

U.S. DEPARTMENT OF ENERGY
Office of River Protection

BULK VITRIFICATION
OFF-GAS TREATMENT
OVERALL SECTION

NAME	DATE	COMPANY/ INITIALS	AMEC
DRAWN BY JCH			
DESIGNED BY			
CHECKED BY			
DESIGN / AREA LEAD			
CONSTRUCTION MANAGER			
PROJECT MANAGER			
DESIGN AUTHORITY			

SIZE F | BLDG NO | INDEX NO | DWG NO | REV

SCALE 3/32"=1' | CAT | SHEET | OF

DWG NO	TITLE
–	DRAWING TRACEABILITY LIST

REF NUMBER	TITLE
–	REFERENCES
NEXT USED ON	

REV NO	REV DATE	DESCRIPTION	REV BY	REV DATE	CHECKED BY	CHK'D	COMPANY
INFO	REV DATE	DESCRIPTION	REV BY	REV DATE	CHECKED BY	CHK'D	COMPANY

REVISIONS

In making requests for transmittal of data by any electronic media, the Company receiving such data agrees that AMEC Americas Limited cannot be held responsible for users of the data outside of or beyond the scope of our original agreement. Also, because data stored in electronic media or transmitted by electronic means can deteriorate undetected or be modified without the consultant's knowledge, the Company receiving data agrees that AMEC Americas Limited cannot be held liable for the compatibility, completeness or correctness of the data.

No.	AMEC Dwg. No.	REFERENCE DRAWINGS
1	F-145579-36-V-0002	OFF-GAS TREATMENT WASTE RECEIPT AREA – PLAN
2	F-145579-00-D-0011	WASTE RECEIPT & DRYER AREA G.A. – PLAN
3	F-145579-00-P-0005	DRYER PIPING LAYOUT
4	F-145579-00-P-0010	DRYER PIPING SECTIONS

NOTES:
SEE NOTES ON DWG F-145579-36-V-0002

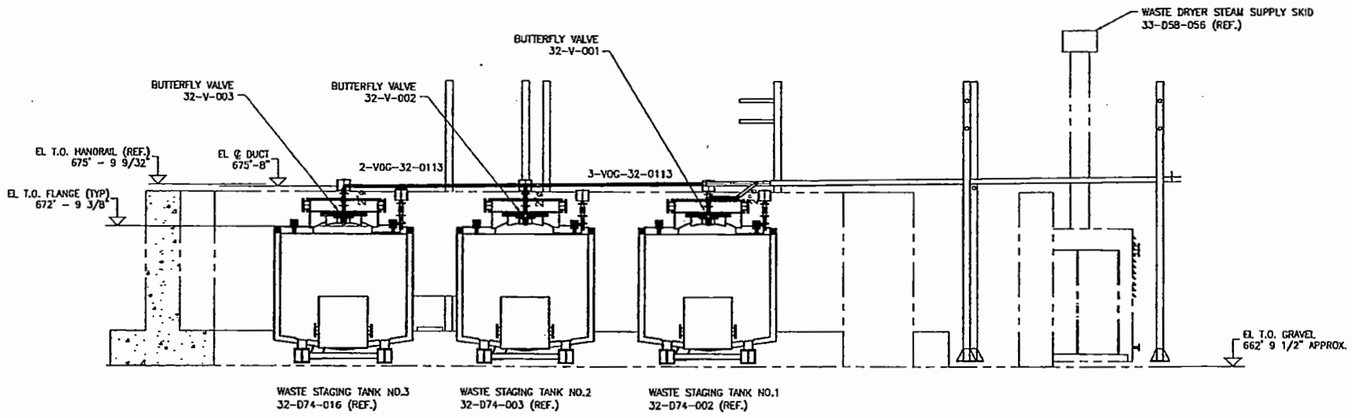

SECTION A/0002
1/4"=1'-0"

NOT APPROVED FOR CONSTRUCTION

Rev.	REVISION DESCRIPTION	Date	By	Chk'd	Approved Design Lead	Approved Proj Mgr
F	ISSUED FOR CH2M REVIEW/ REPORT (AREA 36 ONLY)	25 MAR 06	THB	JM	JL	JSG
E	ISSUED FOR DESIGN	16 DEC 05	RRB		FWS	JDS
D	ISSUED FOR CH2M HILL REVIEW/90% REPORT – (AREA 36 ONLY)	15 MAR 05	RDB	PCF	FWS	TH
C	ISSUED FOR CH2M HILL REVIEW/90% REPORT	20 JAN 05	RDB	PCF	FWS	TH
B	ISSUED FOR INTERNAL APPROVAL	13 DEC 04	RDB	AP	FWS	TH
A	ISSUED FOR REVIEW	21/10/04	RDB	AP	FWS	JDS

AMEC DRAWING NO: F-145579-36-V-0026
REV: F

amec

AMEC PROJECT: 145579-FINAL DBVS DESIGN

U.S. DEPARTMENT OF ENERGY
Office of River Protection

BULK VITRIFICATION
OFF-GAS TREATMENT
WASTE RECEIPT AREA SECTION 'A'

NAME	DATE	COMPANY
DRAWN BY RDB	19 OCT 04	AMEC
REVIEWED BY		AMEC
CHECKED BY		
DESIGN / AREA LEAD		
ENGINEERING MANAGER		
PROJECT MANAGER		
DESIGN AUTHORITY		

SIZE F | BLDG NO | AREA NO | DWG NO | REV
SCALE 1/4"=1'-0" | SHEET | OF

DRAWING TRACEABILITY LIST

DWG NO	TITLE
–	

REFERENCES

REF NUMBER	TITLE
–	

NEXT USED ON

REVISIONS

REV NO	DESCRIPTION	REV BY / DATE	CHECKED BY	ENGR	COMPANY
–					

NOTES:

1. ONLY VENTILATION DUCTWORK PIPING AND SUPPORTING CABLE TRAYS SHOWN. ALL OTHER PIPING AND CABLE TRAYS OMITTED FOR CLARITY.
2. DIMENSIONS AND LOCATIONS OF JOINTS TO BE CONFIRMED BY SELECTED VENDOR.
3. VENTILATION DUCTWORK PIPING TO BE MINIMUM THICKNESS SCHEDULE 40 COMPLETE WITH LONG RADIUS ELBOWS FOR 6" AND SMALLER AND SCHEDULE 10 PIPE AND PIPE FITTINGS FOR PIPE 8" AND LARGER EXCEPT AS NOTED.
4. DUCTWORK MATERIAL AND FABRICATION SHALL CONFORM TO ASME B31.1 POWER PIPING.
5. DUCTWORK FITTINGS AS PER AMEC DWG. NO. F-145579-36-V-0023 STANDARD DETAILS – SHT. 1.
6. I.D. DESIGNATES ISOLATION DAMPERS TO BE FLANDERS ROUND BUBBLE-TIGHT (FLAT BLADE TYPE). FLANGES TO MATCH 150# DRILLING.
7. VENTILATION DUCTWORK SUPPORTS ARE REPRESENTED BY A HEXAGON.
   EXAMPLES – VS– OR RG– CG– CS– A– H– DS–
   FOR "VS" TYPE SUPPORTS SEE DWG. F-145579-36-0024.
   FOR ALL OTHER SUPPORTS SEE DRAWINGS F-145579-00-P-0001 TO -0004.
8. SEE BRANCH REINFORCEMENT DETAIL ON DWG. F-145579-36-V-0023 FOR FITTINGS SHOWN SHADED.

HOLDS:
1. PENDING VENDOR INFORMATION.

In making requests for transmittal of data by any electronic media, the Company receiving such data agrees that AMEC Americas Limited cannot be held responsible for users of the data outside of or beyond the scope of our original agreement. Also, because data stored in electronic media or transmitted by electronic means can deteriorate undetected or be modified without the consultant's knowledge, the Company receiving data agrees that AMEC Americas Limited cannot be held liable for the compatibility, completeness or correctness of the data.

No.	AMEC Dwg. No.	REFERENCE DRAWINGS
1	F-145579-00-D-0041	MELT AREA G.A. ELEVATIONS NORTH AND WEST
2	F-145579-00-D-0051	MELT AREA G.A. PLAN VIEWS
3	F-145579-36-V-0003	OFF-GAS TREATMENT MELT & DRYER LOWER PLAN
4	F-145579-36-V-0004	OFF-GAS TREATMENT MELT & DRYER MIDDLE PLAN
5	F-145579-36-V-0005	OFF-GAS TREATMENT MELT & DRYER UPPER PLANS
6	F-145579-36-V-0028	OFF-GAS TREATMENT MELT & DRYER SECTION C
7	F-145579-36-V-0029	OFF-GAS TREATMENT MELT & DRYER SECTION D
8	F-145579-36-V-0030	OFF-GAS TREATMENT MELT & DRYER SECTION E

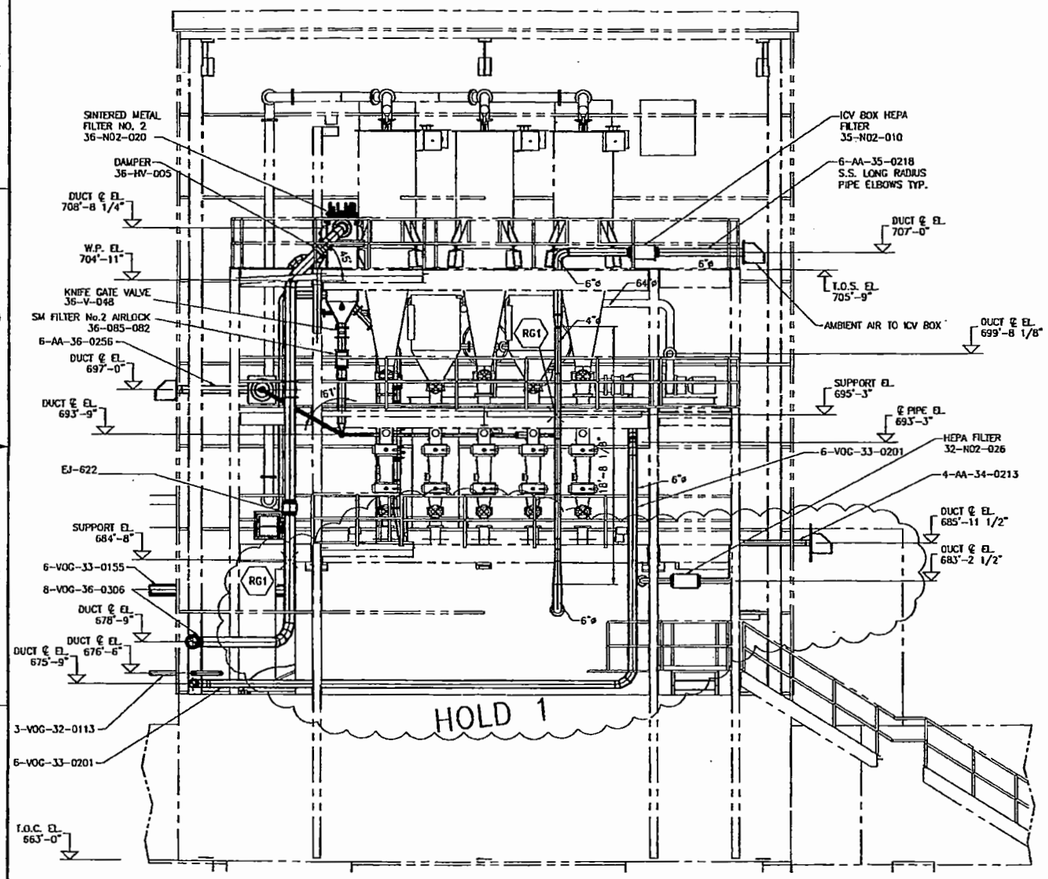

SECTION A A A
1/4"=1'-0" 0003 0004 0005

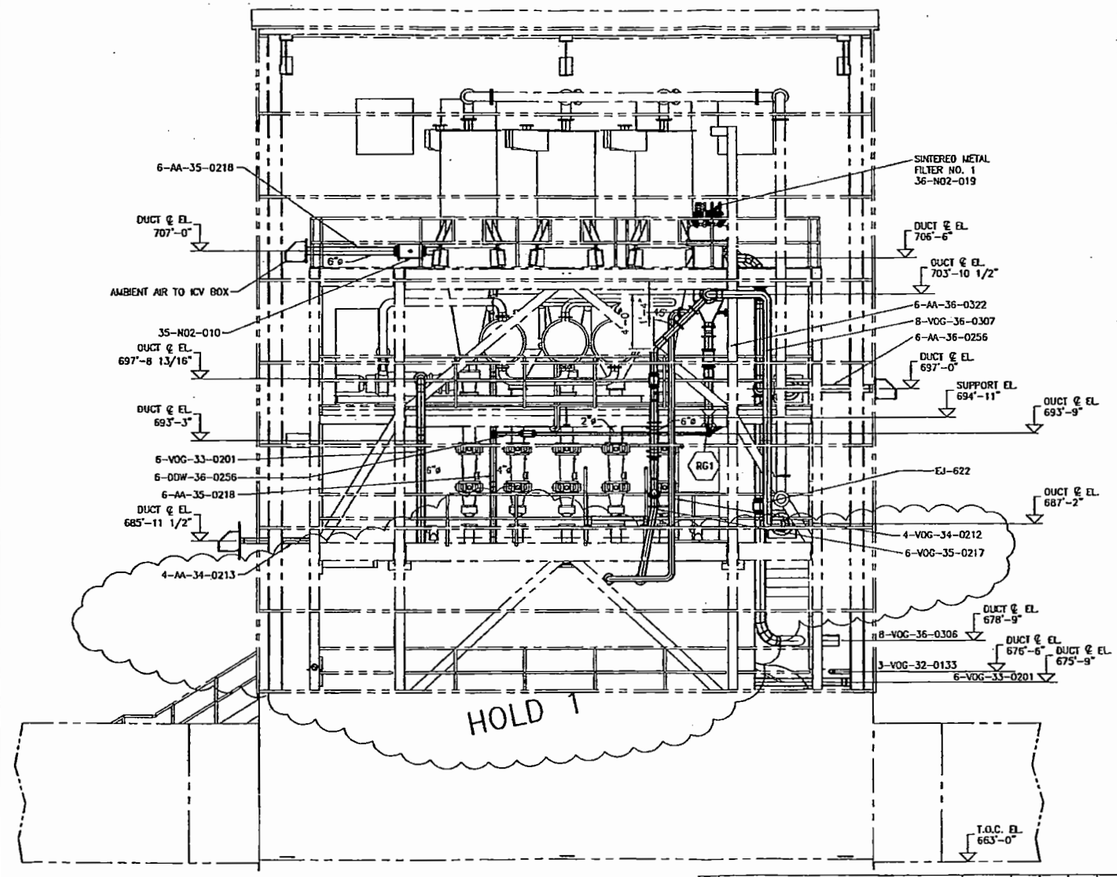

SECTION B B B
1/4"=1'-0" 0003 0004 0005

Rev.	REVISION DESCRIPTION	Date	By	Ch'k'd	Approved	Approved Proj. Mgr.
H	RE-ISSUED FOR OGTS DESIGN REPORT	24 MAR 06	SW	JM	JL	JSG
G	ISSUED OGTS DESIGN REPORT	24 FEB 06	RRB	JM	SRB	JSG
F	ISSUED FOR DESIGN	16/12/05	RRB		FWS	JDS
E	REISSUED FOR CH2M HILL REVIEW/90% REPORT (AREA 36 ONLY)	26/04/05	JCH	PCF	FWS	SC
D	ISSUED FOR CH2M HILL REVIEW/90% REPORT (AREA 35 ONLY)	15/03/05	RDB	PCF	FWS	TH
C	ISSUED FOR CH2M HILL REVIEW/90% REPORT (ICV SYSTEM)	02/03/05	RDB	PCF	GJ	TH
B	ISSUED FOR INTERNAL APPROVAL	17/12/04	RDB	AP	FWS	TH
A	ISSUED FOR REVIEW	05/11/04	RDB	AP	FWS	TH

AMEC DRAWING NO: F-145579-36-V-0027 REV: H

amec

AMEC PROJECT: 145579-FINAL DBVS DESIGN

U.S. DEPARTMENT OF ENERGY
Office of River Protection

BULK VITRIFICATION
OFF-GAS TREATMENT
MELT & DRYER SECTIONS A & B

SIZE F | BLDG NO | SCALE NO | DWG NO | REV
SCALE 1/4"=1'-0" | SHEET OF

NAME | DATE | COMPANY
DESIGN BY: RDB
DRAWN BY:
CHECKED BY:
TECH / AREA LEAD:
OPERATIONS MANAGER:
PROJECT MANAGER:
SENIOR AUTHORITY:

NOT APPROVED FOR CONSTRUCTION

DWG NO	TITLE
–	DRAWING TRACEABILITY LIST

REF NUMBER	TITLE
–	REFERENCES
NEXT USED ON	

NO	REV NO	DESCRIPTION	REV BY DATE	REV BY	CHECKED BY	CHK'D	COMPANY
	–	REVISIONS					

In making requests for transmittal of data by any electronic media, the Company receiving such data agrees that AMEC Americas Limited cannot be held responsible for errors of the data outside of or beyond the scope of our original agreement. Also, because data stored in electronic media or transmitted by electronic means can deteriorate undetected or be modified without the consultant's knowledge, the Company receiving data agrees that AMEC Americas Limited cannot be held liable for the compatibility, completeness or correctness of the data.

No.	AMEC Dwg. No.	REFERENCE DRAWINGS
1	F-145579-00-D-0041	MELT AREA G.A. ELEVATIONS NORTH AND WEST
2	F-145579-00-D-0051	MELT AREA G.A. PLAN VIEWS
3	F-145579-36-V-0003	OFF-GAS TREATMENT MELT & DRYER LOWER PLAN
4	F-145579-36-V-0004	OFF-GAS TREATMENT MELT & DRYER MIDDLE PLAN
5	F-145579-36-V-0005	OFF-GAS TREATMENT MELT & DRYER UPPER PLANS
6	F-145579-36-V-0027	OFF-GAS TREATMENT MELT & DRYER SECTIONS A & B
7	F-145579-36-V-0029	OFF-GAS TREATMENT MELT & DRYER SECTION D
8	F-145579-36-V-0030	OFF-GAS TREATMENT MELT & DRYER SECTION E

NOTES:

1. ONLY VENTILATION DUCTWORK PIPING AND SUPPORTING CABLE TRAYS SHOWN. ALL OTHER PIPING AND CABLE TRAYS OMITTED FOR CLARITY.
2. DIMENSIONS AND LOCATIONS OF JOINTS TO BE CONFIRMED BY SELECTED VENDOR.
3. VENTILATION DUCTWORK PIPING TO BE MINIMUM THICKNESS SCHEDULE 40 COMPLETE WITH LONG RADIUS ELBOWS FOR 6" AND SMALLER AND SCHEDULE 10 PIPE AND PIPE FITTINGS FOR PIPE 8" AND LARGER EXCEPT AS NOTED.
4. DUCTWORK MATERIAL AND FABRICATION SHALL CONFORM TO ASME B31.1 POWER PIPING.
5. DUCTWORK FITTINGS AS PER AMEC DWG. NO. F-145579-36-V-0023 STANDARD DETAILS – SHT. 1.
6. I.D. DESIGNATES ISOLATION DAMPERS TO BE FLANGERS ROUND BUBBLE-TIGHT (FLAT BLADE TYPE). FLANGES TO MATCH 150# DRILLING.
7. VENTILATION DUCTWORK SUPPORTS ARE REPRESENTED BY A HEXAGON.
   EXAMPLES – VS- OR RG- CG- CS- A- H- DS-
   FOR 'VS' TYPE SUPPORTS SEE DWG. F-145579-36-0024.
   FOR ALL OTHER SUPPORTS SEE DRAWINGS F-145579-00-P-0001 TO -0004.
8. SEE BRANCH REINFORCEMENT DETAIL ON DWG. F-145579-36-V-0023 FOR FITTINGS SHOWN SHADED.

HOLDS: K
1. PENDING VENDOR INFORMATION.

NOT APPROVED FOR CONSTRUCTION

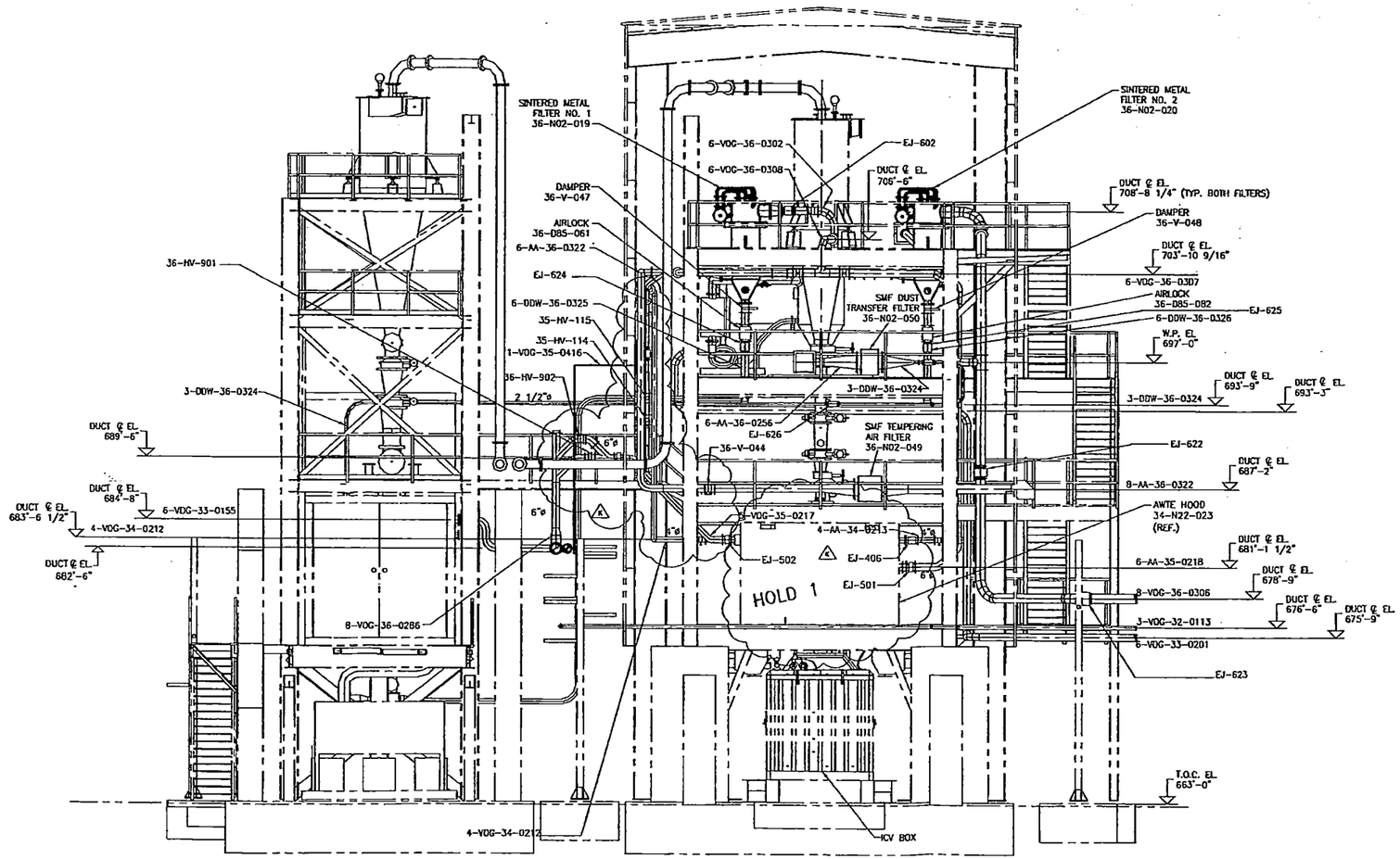

SECTION C 0003 / C 0004 / C 0005
1/4"=1'-0"

Rev.	REVISION DESCRIPTION	Date	By	Ch'd	Approved Dept Lead	Approved Proj Mgr
K	RE-ISSUED FOR OGTS DESIGN PACKAGE	24 MAR 06	SW	JM	JL	JSG
J	ISSUED FOR OGTS DESIGN REVIEW	24 FEB 06	RRB	JM	SRB	JSG
H	ISSUED FOR DESIGN	16/12/05	RRB		FWS	JDS
G	ISSUED FOR INFORMATION – OFF-GAS SYSTEM REVISED	14/11/05	RDB		FWS	JDS
F	REISSUED FOR CH2M HILL REVIEW/90% REPORT(AREA 36 ONLY)	26/04/05	RDB	PCF	FWS	SC
E	ISSUED FOR CH2M HILL REVIEW/90% REPORT (AREA 36 ONLY)	15/03/05	RDB	PCF	FWS	TH
D	ISSUED FOR CH2M HILL REVIEW/90% REPORT (ICV SYSTEM)	02/03/05	RDB	PCF	GJ	TH
C	ISSUED FOR CH2M HILL REVIEW/90% REPORT (AREA 33 ONLY)	31/01/05	RDB	PCF	FWS	TH
B	ISSUED FOR INTERNAL APPROVAL	17/12/04	RDB	AP	FWS	TH
A	ISSUED FOR REVIEW	05/11/04	RDB	AP	FWS	TH

AMEC DRAWING NO: F-145579-36-V-0028 REV: K

amec

AMEC PROJECT: 145579-FINAL DBVS DESIGN

U.S. DEPARTMENT OF ENERGY
Office of River Protection

BULK VITRIFICATION
OFF-GAS TREATMENT
MELT & DRYER SECTION 'C'

NAME	DATE
DRAWN BY RDB	19 OCT 05
DESIGNED BY	
CHECKED BY	
DESIGN / ANCH. LEAD	
DISCIPLINE MANAGER	
PROJECT MANAGER	
DESIGN AUTHORITY	

SIZE F | BLDG NO | AREA NO | DWG NO | REV
SCALE 1/4"=1'-0" | SHEET | OF

DRAWING TRACEABILITY LIST

DWG NO	TITLE
–	

REFERENCES

REF NUMBER	TITLE	NEXT USED ON
–		

REVISIONS

ISSD REL	REV NO	DESCRIPTION	REV BY DATE	REV BY	CHECKED BY	ENGR	COMPANY
	–						

In making requests for transmittal of data by any electronic media, the Company receiving such data agrees that AMEC Americas Limited cannot be held responsible for uses of the data outside of or beyond the scope of our original agreement. Also, because data stored in electronic media or transmitted by electronic means can deteriorate undetected or be modified without the consultant's knowledge, the Company receiving data agrees that AMEC Americas Limited cannot be held liable for the compatibility, completeness or correctness of the data.

RPP-24544
REV 1d

No.	AMEC Dwg. No.	REFERENCE DRAWINGS
1	F-145579-00-0-0041	MELT AREA G.A. ELEVATIONS NORTH AND WEST
2	F-145579-00-0-0051	MELT AREA G.A. PLAN VIEWS
3	F-145579-36-V-0003	OFF-GAS TREATMENT MELT & DRYER LOWER PLAN
4	F-145579-36-V-0004	OFF-GAS TREATMENT MELT & DRYER MIDDLE PLAN
5	F-145579-36-V-0005	OFF-GAS TREATMENT MELT & DRYER UPPER PLANS
6	F-145579-36-V-0027	OFF-GAS TREATMENT MELT & DRYER SECTIONS A & B
7	F-145579-36-V-0028	OFF-GAS TREATMENT MELT & DRYER SECTION C
8	F-145579-36-V-0030	OFF-GAS TREATMENT MELT & DRYER SECTION E

NOTES:

1. ONLY VENTILATION DUCTWORK PIPING AND SUPPORTING CABLE TRAYS SHOWN. ALL OTHER PIPING AND CABLE TRAYS OMITTED FOR CLARITY.
2. DIMENSIONS AND LOCATIONS OF JOINTS TO BE CONFIRMED BY SELECTED VENDOR.
3. VENTILATION DUCTWORK PIPING TO BE MINIMUM THICKNESS SCHEDULE 40 COMPLETE WITH LONG RADIUS ELBOWS FOR 6" AND SMALLER AND SCHEDULE 10 PIPE AND PIPE FITTINGS FOR PIPE 8" AND LARGER EXCEPT AS NOTED.
4. DUCTWORK MATERIAL AND FABRICATION SHALL CONFORM TO ASME B31.1 POWER PIPING.
5. DUCTWORK FITTINGS AS PER AMEC DWG. NO. F-145579-36-V-0023 STANDARD DETAILS - SHT. 1.
6. I.D. DESIGNATES ISOLATION DAMPERS TO BE FLANDERS ROUND BUBBLE-TIGHT (FLAT BLADE TYPE). FLANGES TO MATCH 150# DRILLING.
7. VENTILATION DUCTWORK SUPPORTS ARE REPRESENTED BY A HEXAGON.
   EXAMPLES - VS- OR RG- CG- CS- A- H- DS-
   FOR 'VS' TYPE SUPPORTS SEE DWG. F-145579-36-0024.
   FOR ALL OTHER SUPPORTS SEE DRAWINGS F-145579-00-P-0001 TO -0004.
8. SEE BRANCH REINFORCEMENT DETAIL ON DWG. F-145579-36-V-0023 FOR FITTINGS SHOWN SHADED.

HOLDS:
1. PENDING VENDOR INFORMATION.

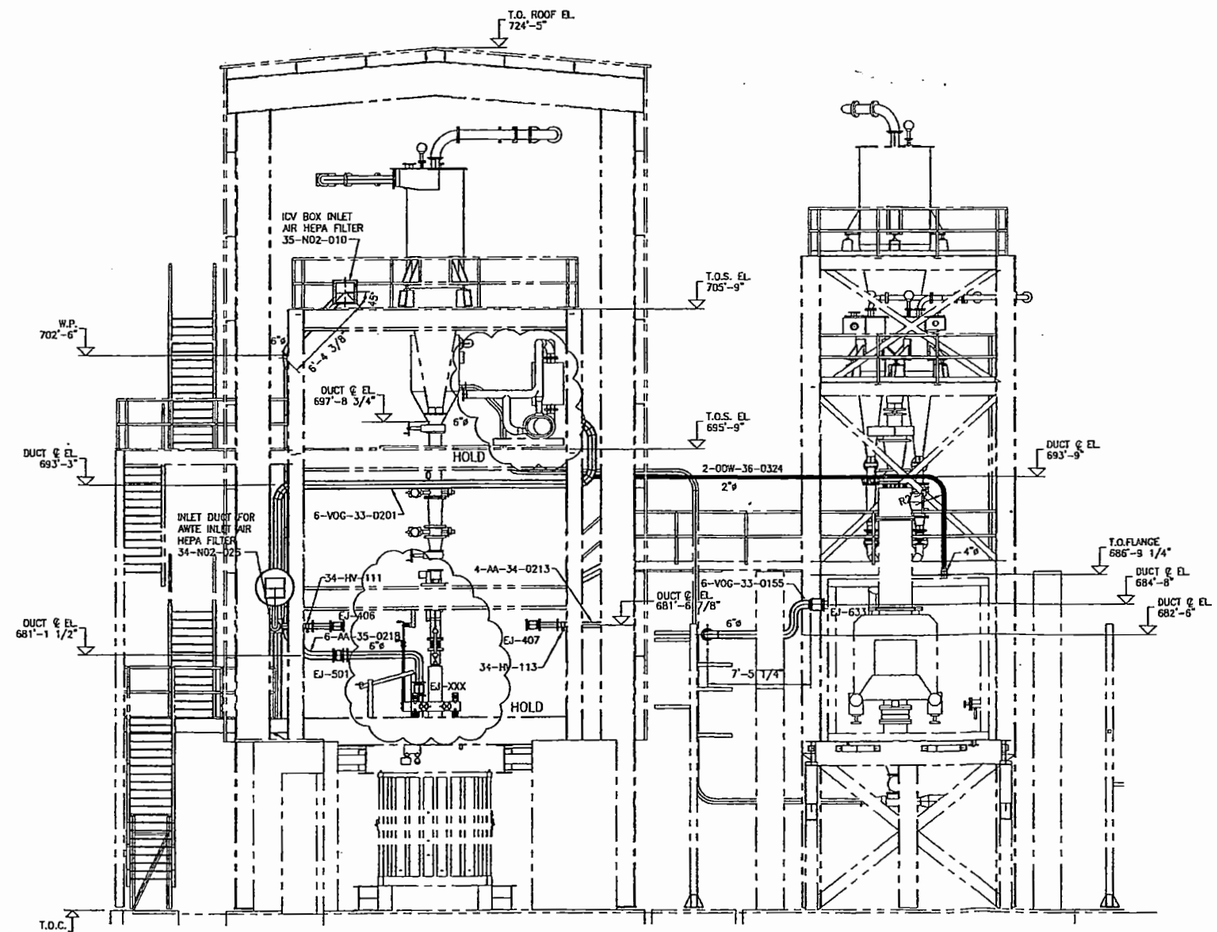

SECTION D/0003 D/0004 D/0005
1/4"=1'-0"

NOT APPROVED FOR CONSTRUCTION

Rev.	REVISION DESCRIPTION	Date	By	Chk'd	Approved Dept Mgr	Approved Proj Mgr
J	ISSUED FOR CH2M REVIEW/REPORT (AREA 36 ONLY)	25 MAR 06	THB	JM	JL	JSG
H	ISSUED FOR OGTS DESIGN REPORT	24 FEB 06	RRB	JM	SRB	JSG
G	ISSUED FOR DESIGN	16/12/05	RRB		FWS	JDS
F	REISSUED FOR CH2M HILL REVIEW/90% REPORT (AREA 36 ONLY)	26/04/05	JCH	PCF	FWS	SC
E	ISSUED FOR CH2M HILL REVIEW/90% REPORT (AREA 36 ONLY)	15/03/05	JCH	PCF	FWS	TH
D	ISSUED FOR CH2M HILL REVIEW/90% REPORT - (ICV SYSTEM)	02/03/05	JCH	PCF	GJ	TH
C	ISSUED FOR CH2M HILL REVIEW/90% REPORT - (AREA 33 ONLY)	31/01/05	JCH	PCF	FWS	TH
B	ISSUED FOR INTERNAL APPROVAL	17/12/04	RDB	AP	FWS	TH
A	ISSUED FOR REVIEW	10/11/04	RDB	AP	GJ	TH

AMEC DRAWING NO: F-145579-36-V-0029 REV: J

amec

AMEC PROJECT: 145579-FINAL DBVS DESIGN

U.S. DEPARTMENT OF ENERGY
Office of River Protection

BULK VITRIFICATION
OFF-GAS TREATMENT
MELT & DRYER SECTION 'D'

NAME	DATE	COMPANY
DESIGNED BY JCH	28 OCT 04	AMEC
TECHNICALLY BY		
CHECKED BY		
DISCIPLINE / AREA LEAD		
DISCIPLINE MANAGER		
PROJECT MANAGER		
DESIGN AUTHORITY		

SIZE F | BLDG NO | SHEET NO | DWG NO | REV
SCALE 1/4"=1'-0" | CDT | SHEET | OF

DWG NO	TITLE
DRAWING TRACEABILITY LIST	

REF NUMBER	TITLE
REFERENCES	
NEXT USED ON	

REV NO	REV DATE	DESCRIPTION	REV BY	REV DT	CHECKED BY	CHCK DT	COMPANY
REVISIONS							

In making requests for transmittal of data by any electronic media, the Company receiving such data agrees that AMEC Americas Limited cannot be held responsible for users of the data outside of or beyond the scope of our original agreement. Also, because data stored in electronic media or transmitted by electronic means can deteriorate undetected or be modified without the consultant's knowledge, the Company receiving data agrees that AMEC Americas Limited cannot be held liable for the compatibility, completeness or correctness of the data.

RPP-24544
REV 1d

No.	AMEC Dwg. No.	REFERENCE DRAWINGS
1	F-145579-00-D-0041	MELT AREA G.A. ELEVATIONS NORTH AND WEST
2	F-145579-00-D-0051	MELT AREA G.A. PLAN VIEWS
3	F-145579-36-V-0003	OFF-GAS TREATMENT MELT & DRYER LOWER PLAN
4	F-145579-36-V-0004	OFF-GAS TREATMENT MELT & DRYER MIDDLE PLAN
5	F-145579-36-V-0005	OFF-GAS TREATMENT MELT & DRYER UPPER PLANS
5	F-145579-36-V-0027	OFF-GAS TREATMENT MELT & DRYER SECTIONS A & B
6	F-145579-36-V-0028	OFF-GAS TREATMENT MELT & DRYER SECTION C
7	F-145579-36-V-0029	OFF-GAS TREATMENT MELT & DRYER SECTION D

NOTES:

1. ONLY VENTILATION DUCTWORK PIPING AND SUPPORTING CABLE TRAYS SHOWN. ALL OTHER PIPING AND CABLE TRAYS OMITTED FOR CLARITY.
2. DIMENSIONS AND LOCATIONS OF JOINTS TO BE CONFIRMED BY SELECTED VENDOR.
3. VENTILATION DUCTWORK PIPING TO BE MINIMUM THICKNESS SCHEDULE 40 COMPLETE WITH LONG RADIUS ELBOWS FOR 6" AND SMALLER AND SCHEDULE 10 PIPE AND PIPE FITTINGS FOR PIPE 8" AND LARGER EXCEPT AS NOTED.
4. DUCTWORK MATERIAL AND FABRICATION SHALL CONFORM TO ASME B31.1 POWER PIPING.
5. DUCTWORK FITTINGS AS PER AMEC DWG. NO. F-145579-36-V-0023 STANDARD DETAILS – SHT. 1.
6. I.D. DESIGNATES ISOLATION DAMPERS TO BE FLANDERS ROUND BUBBLE-TIGHT (FLAT BLADE TYPE). FLANGES TO MATCH 150# DRILLING.
7. VENTILATION DUCTWORK SUPPORTS ARE REPRESENTED BY A HEXAGON.
   EXAMPLES – VS- OR RG- CG- CS- A- H- DS-
   FOR 'VS' TYPE SUPPORTS SEE DWG. F-145579-36-0024.
   FOR ALL OTHER SUPPORTS SEE DRAWINGS F-145579-00-P-0001 TO -0004.
8. SEE BRANCH REINFORCEMENT DETAIL ON DWG. F-145579-36-V-0023 FOR FITTINGS SHOWN SHADED.

HOLDS: J
1. PENDING VENDOR INFORMATION.

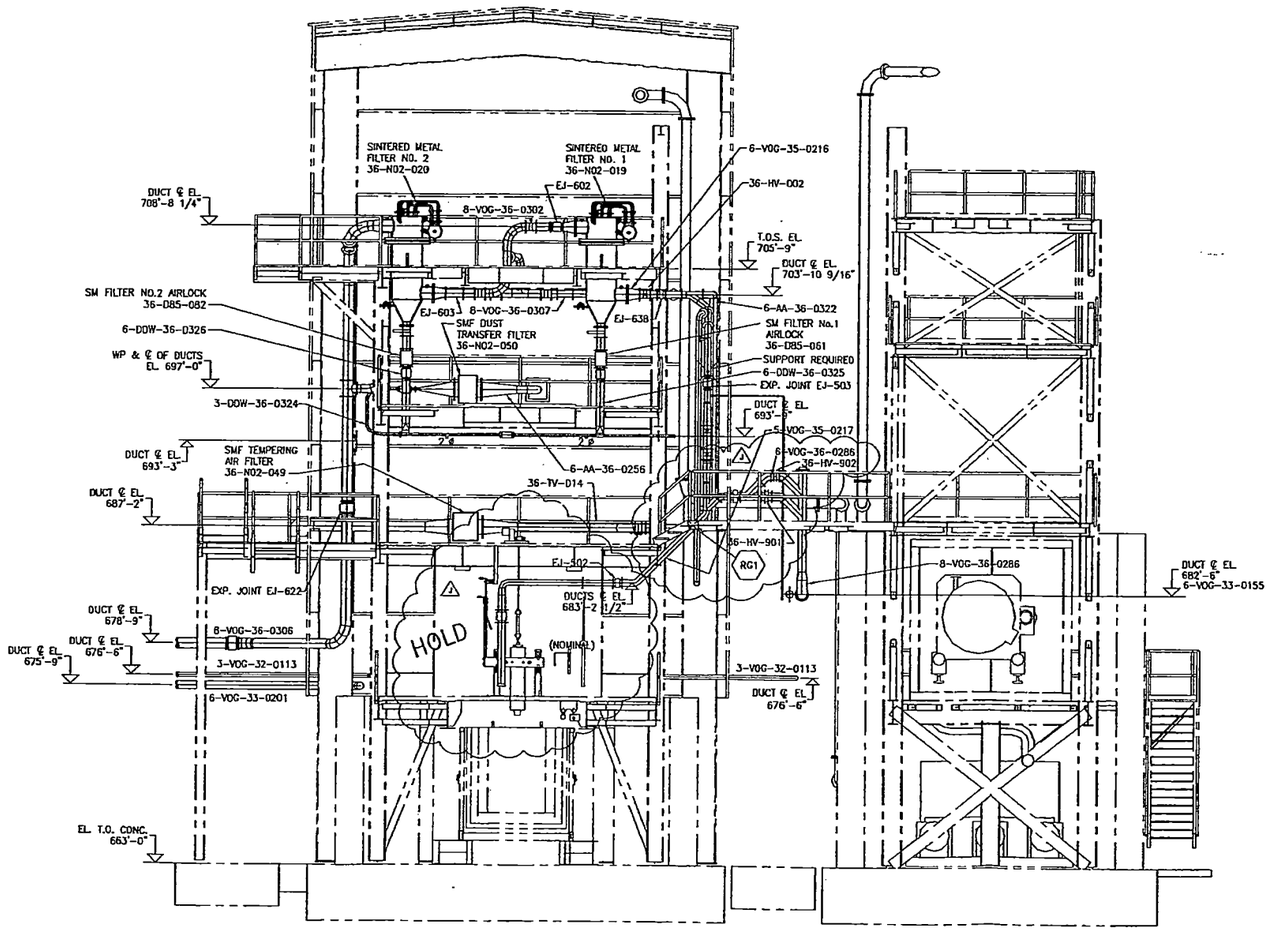

SECTION E 0003 / E 0004 / E 0005
1/4"=1'-0"

NOT APPROVED FOR CONSTRUCTION

Rev.	REVISION DESCRIPTION	Date	By	Ch'k'd	Approved Design Level	Approved Proj. Mgr.
J	RE-ISSUED FOR OGTS DESIGN REPORT	25 MAR 06	THB	JM	JL	JSC
H	ISSUED FOR OGTS DESIGN REPORT	24 FEB 06	RRB	JM	SRB	JSC
G	ISSUED FOR DESIGN	16/12/05	RRB		FWS	JDS
F	ISSUED FOR INFORMATION – OFF-GAS SYSTEM REVISED	14/11/05	ROB		FWS	JDS
E	REISSUED FOR CH2M HILL REVIEW/SOX REPORT (AREA 36 ONLY)	26/04/05	JCH	PCF	FWS	SC
D	ISSUED FOR CH2M HILL REVIEW/SOX REPORT (AREA 35 ONLY)	15/03/05	JCH	PCF	FWS	TH
C	ISSUED FOR CH2M HILL REVIEW/SOX REPORT (KCV SYSTEM)	02/03/05	JCH	PCF	GJ	TH
B	ISSUED FOR CH2M HILL REVIEW/SOX REPORT (AREA 33 ONLY)	31/01/05	ROB	PCF	FWS	TH
A	ISSUED FOR INTERNAL APPROVAL	17/12/04	ROB	AP	FWS	TH

AMEC DRAWING NO: F-145579-36-V-0030 REV: J

amec

AMEC PROJECT: 145579-FINAL DBVS DESIGN

U.S. DEPARTMENT OF ENERGY
Office of River Protection

BULK VITRIFICATION
OFF-GAS TREATMENT
MELT & DRYER SECTION 'E'

NAME	DATE	COMPANY
DESIGN BY ROB	14 DEC 04	AMEC
DESIGNED BY		
CHECKED BY		
DESIGN / DATA LEAD		
DISCIPLINE MANAGER		
PROJECT MANAGER		
DESIGN AUTHORITY		

SIZE: F | BLDG NO | SHEET NO | DWG NO | REV

SCALE: 1/4"=1'-0" | SHEET OF

DWG NO	TITLE
–	

DRAWING TRACEABILITY LIST

REF NUMBER	TITLE
–	

REFERENCES
NEXT USED ON

REV NO	DESCRIPTION	REV BY DATE	REV BY	CHECKED BY	ENGR COMPANY
–					

REVISIONS

In making requests for transmittal of data by any electronic media, the Company receiving such data agrees that AMEC Americas Limited cannot be held responsible for users of the data outside of or beyond the scope of our original agreement. Also, because data stored in electronic media or transmitted by electronic means can deteriorate undetected or be modified without the consultant's knowledge, the Company receiving data agrees that AMEC Americas Limited cannot be held liable for the compatibility, completeness or correctness of the data.

No.	AMEC Dwg. No.	REFERENCE DRAWINGS
1	F-145579-36-V-0006	OFF-GAS TREATMENT – WET SCRUBBER SKID PLAN

NOTES.

1. SUPPORTS FOR EQUIPMENT PER VENDORS DETAILS
2. FOR PIPING SUPPORTS SEE DWG F-145579-36-V-0024
4. PIPING AND CABLE TRAYS OMITTED FOR CLARITY
5. ALL VALVES SHOWN ON PIPING ARE TO BE "BUBBLE TIGHT" TYPE

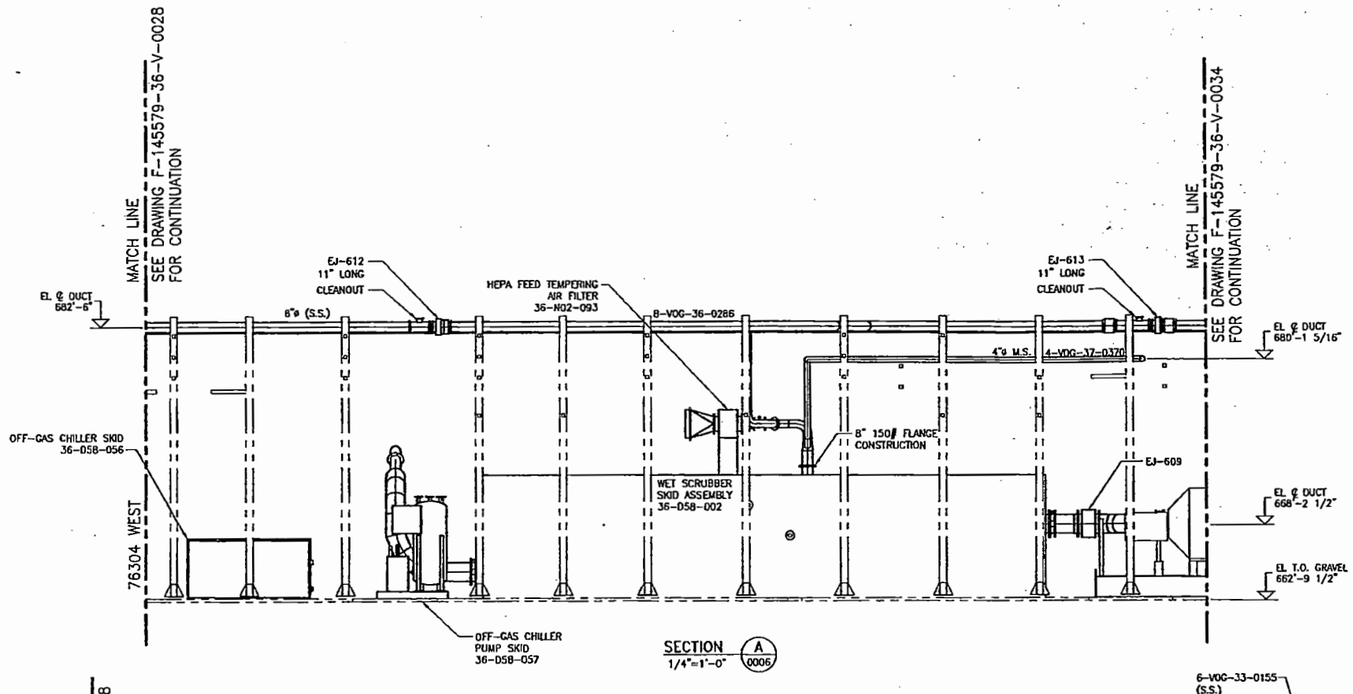

SECTION A 0006
1/4"=1'-0"

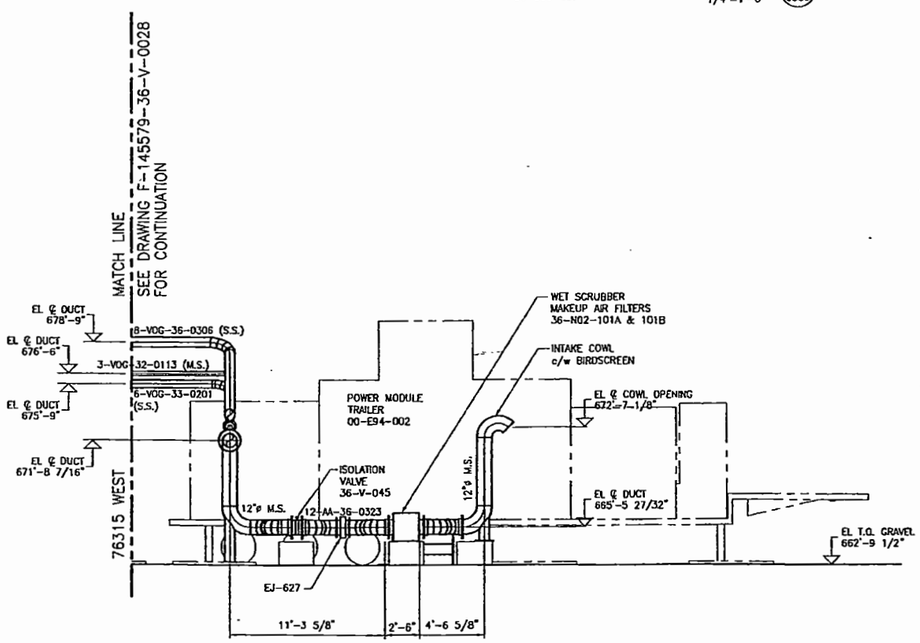

SECTION B 0006
1/4"=1'-0"

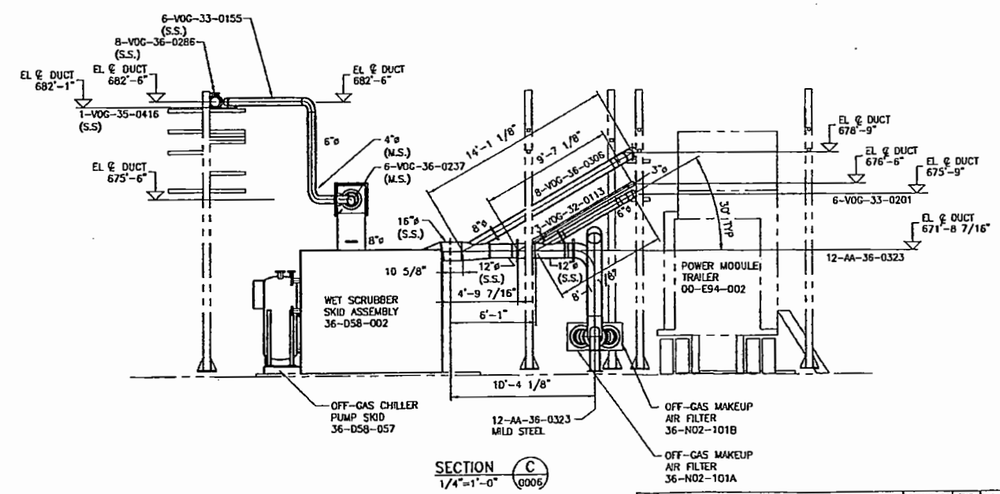

SECTION C 0006
1/4"=1'-0"

Rev.	REVISION DESCRIPTION	Date	By	Ch'd	Approved Design Lead	Approved Project Mgr.
G	ISSUED FOR CH2M REVIEW/REPORT (AREA 36 ONLY)	25 MAR 06	THB	JM	JL	JSG
F	ISSUED FOR OGTS DESIGN REPORT	24 FEB 06	RRB	JM	SRB	JSG
E	ISSUED FOR DESIGN	16/12/05	RRB		FWS	JDS
D	ISSUED FOR INFORMATION – OFF-GAS SYSTEM REVISED	14/11/05	RDB		FWS	JDS
C	ISSUED FOR CH2M HILL REVIEW/90 % REPORT – (AREA 36 ONLY)	15 MAR 05	RDB	PCF	FWS	TH
B	ISSUED FOR INTERNAL APPROVAL	21 DEC 04	JCH	AP	FWS	TH
A	ISSUED FOR REVIEW	29 OCT 04	RDB	AP	FWS	JDS

AMEC DRAWING NO F-145579-36-V-0031 REV G

amec

AMEC PROJECT: 145579-FINAL DBVS DESIGN

U.S. DEPARTMENT OF ENERGY
Office of River Protection

BULK VITRIFICATION
OFF-GAS TREATMENT
WET SCRUBBER SKID SECTIONS

NAME	DATE	COMPANY
DESIGNED BY RDB		AMEC
DESIGNED BY		
CHECKED BY		
PROJECT DISCIPLINE		
PROJECT MANAGER		
DESIGN AUTHORITY		

SIZE F | BLDG NO | SHEET NO | DWG NO | REV
SCALE 1/4"=1'-0" | CUT | SHEET OF

DWG NO	TITLE
–	

DRAWING TRACEABILITY LIST

REF NUMBER	TITLE
–	

REFERENCES
NEXT USED ON

REV NO	REV DATE	DESCRIPTION	REV BY	REV BY DATE	CHECKED BY	CHK'D	COMPANY
–							

REVISIONS

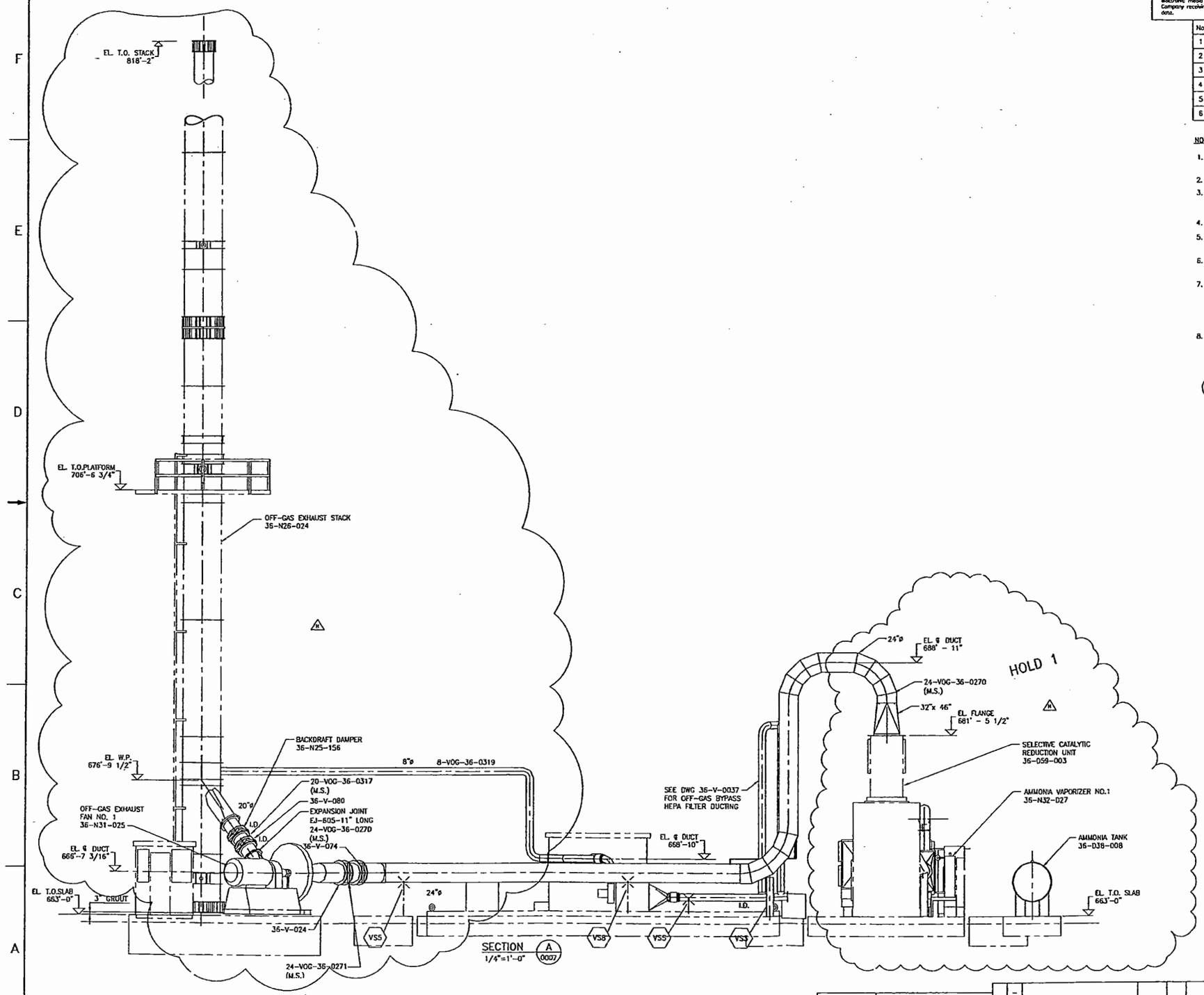

In making requests for transmittal of data by any electronic media, the Company receiving such data agrees that AMEC Americas Limited cannot be held responsible for users of the data outside of or beyond the scope of our original agreement. Also, because data stored in electronic media or transmitted by electronic means can deteriorate undetected or be modified without the consultant's knowledge, the Company receiving data agrees that AMEC Americas Limited cannot be held liable for the compatibility, completeness or correctness of the data.

No.	AMEC Dwg. No.	REFERENCE DRAWINGS
1	F-145579-00-D-0008	OFF-GAS & ELECT. TRAILERS G.A. - PLAN
2	F-145579-00-P-0007	OFF-GAS TREATMENT - PIPING LAYOUT
3	F-145579-00-P-0012	OFF-GAS TREATMENT - PIPING SECTIONS
4	F-145579-36-V-0007	OFF-GAS TREATMENT - SCRUB & STACK PLAN
5	F-145579-36-V-0034	OFF-GAS TREATMENT - SCRUB & STACK SECTIONS
6	F-145579-36-V-0021	OFF-GAS EXHAUST STACK DETAILS

NOTES:

1. ONLY VENTILATION DUCTWORK PIPING AND SUPPORTING CABLE TRAYS SHOWN. ALL OTHER PIPING AND CABLE TRAYS OMITTED FOR CLARITY.
2. DIMENSIONS AND LOCATIONS OF JOINTS TO BE CONFIRMED BY SELECTED VENDOR.
3. VENTILATION DUCTWORK PIPING TO BE MINIMUM THICKNESS SCHEDULE 40 COMPLETE WITH LONG RADIUS ELBOWS FOR 6" AND SMALLER AND SCHEDULE 10 PIPE AND PIPE FITTINGS FOR PIPE 8" AND LARGER EXCEPT AS NOTED.
4. DUCTWORK MATERIAL AND FABRICATION SHALL CONFORM TO ASME B31.1 POWER PIPING.
5. DUCTWORK FITTINGS AS PER AMEC DWG. NO. F-145579-36-V-0023 STANDARD DETAILS - SHT. 1.
6. I.D. DESIGNATES ISOLATION DAMPERS TO BE FLANDERS ROUND BUBBLE-TIGHT (FLAT BLADE TYPE). FLANGES TO MATCH 150# DRILLING.
7. VENTILATION DUCTWORK SUPPORTS ARE REPRESENTED BY A HEXAGON.
   EXAMPLES - VS- OR RG- CG- CS- A- H- DS-
   FOR 'VS' TYPE SUPPORTS SEE DWG. F-145579-36-0024.
   FOR ALL OTHER SUPPORTS SEE DRAWINGS F-145579-00-P-0001 TO -0004.
8. SEE BRANCH REINFORCEMENT DETAIL ON DWG. F-145579-36-V-0023 FOR FITTINGS SHOWN SHADED.

HOLDS:
1. PENDING VENDOR INFORMATION.

Rev.	REVISION DESCRIPTION	Date	By	Ch'd	Approved Design Engr	Approved Proj Dir
H	RE-ISSUED FOR CH2M REVIEW/ REPORT (AREA 36 ONLY)	25 MAR 06	THB	JM	JL	JSG
G	ISSUED FOR OGTS DESIGN REPORT	24 FEB 06	RRB	JM	SRB	JSG
F	ISSUED FOR DESIGN	16/12/05	RRB		FWS	JDS
E	ISSUED FOR INFORMATION - OFF-GAS SYSTEM REVISED	14/11/05	RDB		FWS	JDS
D	REISSUED FOR CH2M HILL REVIEW/SOX REPORT-(AREA 36 ONLY)	26/04/05	RDB	PCF	FWS	SC
C	ISSUED FOR CH2M HILL REVIEW/SOX REPORT-(AREA 36 ONLY)	15/03/05	JCH	PCF	FWS	TH
B	ISSUED FOR INTERNAL APPROVAL	21/12/04	RDB	AP	FWS	TH
A	ISSUED FOR REVIEW	23/09/04	JCH	AP	FWS	TH

AMEC DRAWING NO: F-145579-36-V-0033 REV: H

amec

NAME	DATE	COMPANY
DESIGN BY JCH	11/3/05	AMEC
DESIGNED BY		
CHECKED BY		
DESIGN / DISCIPLINE LEAD		
ENGINEERING MANAGER		
PROJECT MANAGER		
DESIGN AUTHORITY		

AMEC PROJECT: 145579-FINAL DBVS DESIGN

U.S. DEPARTMENT OF ENERGY
Office of River Protection

BULK VITRIFICATION
OFF-GAS TREATMENT
SCRUB & STACK SECTION

SIZE F | BLDG NO | MODEL NO | DWG NO | REV

SCALE 1/4"=1' | CDE | SHEET OF

DWG NO	TITLE
-	

DRAWING TRACEABILITY LIST

REF NUMBER	TITLE
-	

REFERENCES

NEXT USED ON

REV SEL	WTD	REV BY	DESCRIPTION	REV BY DATE	REV BY	CHECKED BY	CHCK	COMPANY
		-						

REVISIONS

In making requests for transmittal of data by any electronic media, the Company receiving such data agrees that AMEC Americas Limited cannot be held responsible for errors of the data outside of or beyond the scope of our original agreement. Also, because data stored in electronic media or transmitted by electronic means can deteriorate undetected or be modified without the consultant's knowledge, the Company receiving data agrees that AMEC Americas Limited cannot be held liable for the compatibility, completeness or correctness of the data.

No.	AMEC Dwg. No.	REFERENCE DRAWINGS
1	F-145579-00-D-0008	OFF-GAS & ELECT. TRAILERS G.A. - PLAN
2	F-145579-00-P-0007	OFF-GAS TREATMENT - PIPING LAYOUT
3	F-145579-00-P-0012	OFF-GAS TREATMENT - PIPING SECTIONS
4	F-145579-36-V-0007	OFF-GAS TREATMENT - SCRUB & STACK PLAN
5	F-145579-36-V-0033	OFF-GAS TREATMENT - SCRUB & STACK SECTION
6	F-145579-36-V-0021	OFF-GAS EXHAUST STACK DETAILS

NOTES:

1. ONLY VENTILATION DUCTWORK PIPING AND SUPPORTING CABLE TRAYS SHOWN. ALL OTHER PIPING AND CABLE TRAYS OMITTED FOR CLARITY.
2. DIMENSIONS AND LOCATIONS OF JOINTS TO BE CONFIRMED BY SELECTED VENDOR.
3. VENTILATION DUCTWORK PIPING TO BE MINIMUM THICKNESS SCHEDULE 40 COMPLETE WITH LONG RADIUS FOR PIPE 6" AND SMALLER AND SCHEDULE 10 FOR PIPE 8" AND LARGER EXCEPT AS NOTED.
4. DUCTWORK MATERIAL AND FABRICATION SHALL CONFORM TO ASME B31.1 POWER PIPING.
5. DUCTWORK FITTINGS AS PER AMEC DWG. NO. F-145579-36-V-0023 STANDARD DETAILS - SHT. 1.
6. I.D. DESIGNATES ISOLATION DAMPERS TO BE FLANGERS ROUND BUBBLE-TIGHT (FLAT BLADE TYPE). FLANGES TO MATCH 150# DRILLING.
7. VENTILATION DUCTWORK SUPPORTS ARE REPRESENTED BY A HEXAGON.
   EXAMPLES - VS- OR RG- CG- CS- A- H- DS-
   FOR 'VS' TYPE SUPPORTS SEE DWG. F-145579-36-0024.
   FOR ALL OTHER SUPPORTS SEE DRAWINGS F-145579-00-P-0001 TO -0004.
8. SEE BRANCH REINFORCEMENT DETAIL ON DWG. F-145579-36-V-0023 FOR FITTINGS SHOWN SHADED.

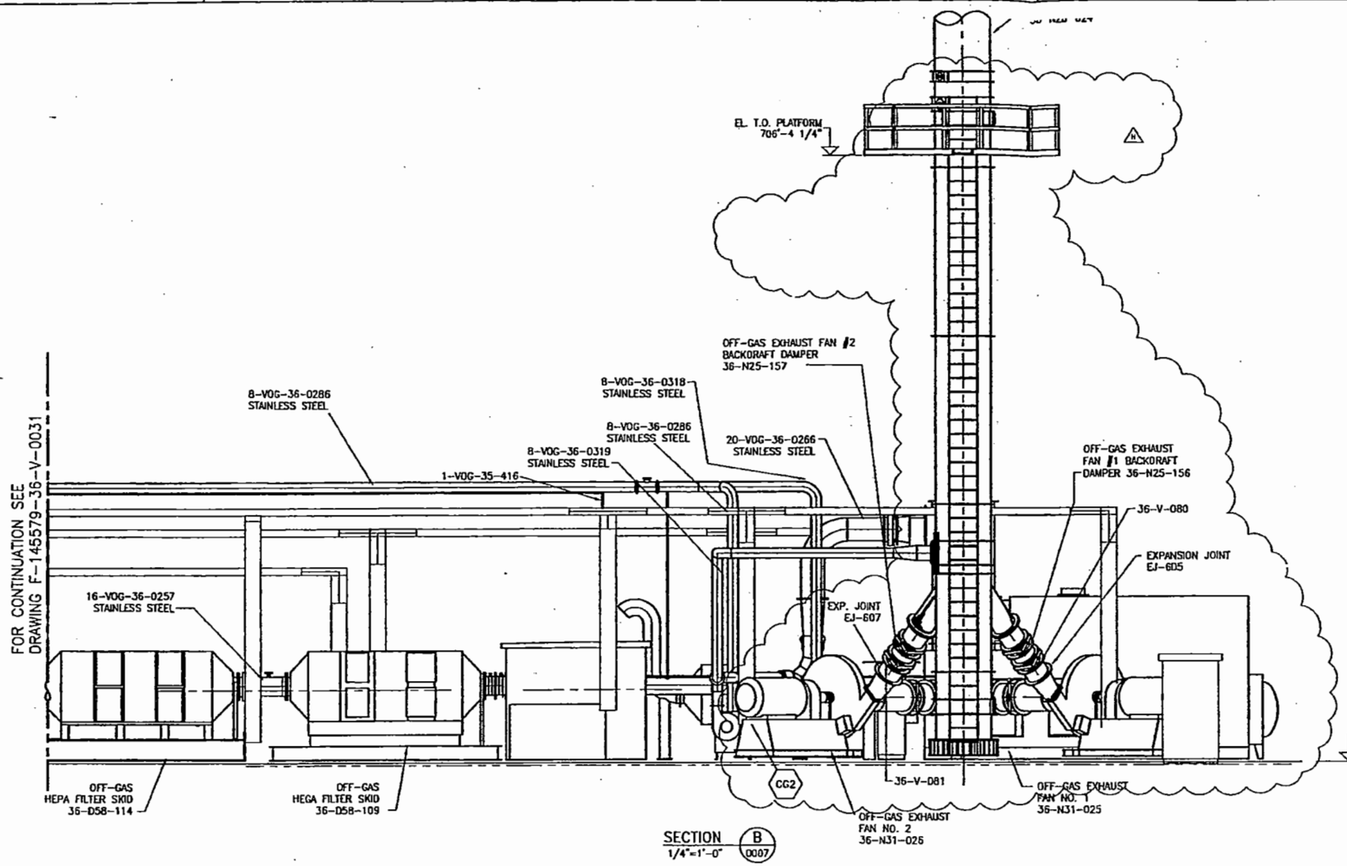

SECTION B 0007
1/4"=1'-0"

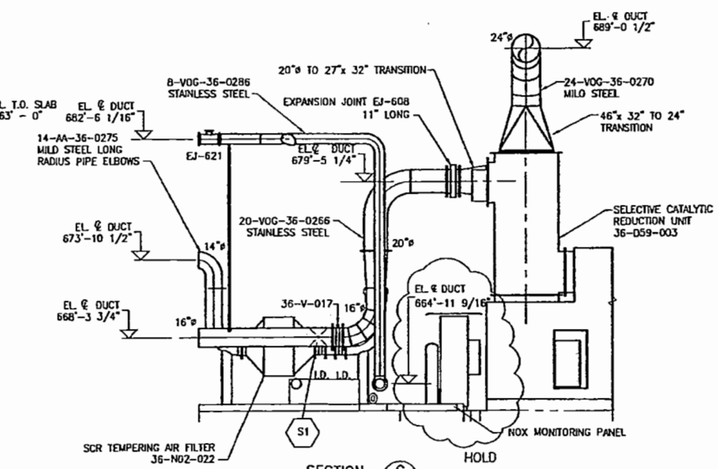

SECTION C 0007
1/4"=1'-0"

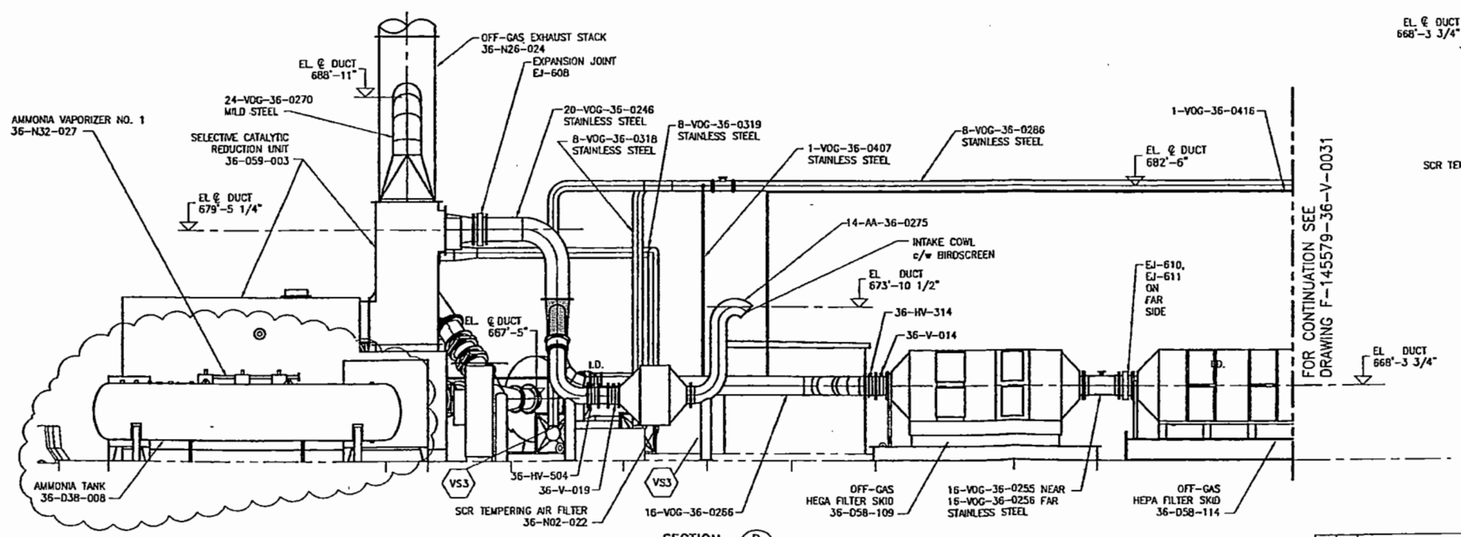

SECTION D 0007
1/4"=1'-0"

DWG NO	TITLE	REF NUMBER	TITLE
	DRAWING TRACEABILITY LIST	NEXT USED ON	REFERENCES

REV NO	DESCRIPTION	REV BY DATE	REV BY	CHECKED BY	CHKD
H	ISSUED FOR CH2M REVIEW/ REPORT (AREA 36 ONLY)	25 MAR 06	THB	JM	JL	JSG
G	ISSUED FOR OGTS DESIGN REPORT	24 FEB 06	RRB	JM	SRB	JSG
F	ISSUED FOR DESIGN	16 DEC 05	RRB		FWS	JDS
E	ISSUED FOR INFORMATION - OFF GAS SYSTEM REVISED	14 NOV 05	RRB		FWS	JDS
D	REISSUED FOR CH2M HILL REVIEW/SOX REPORT (AREA 36 ONLY)	26 APR 05	RDB	AA	FWS	SC
C	ISSUED FOR CH2M HILL REVIEW/SOX REPORT (AREA 36 ONLY)	10/03/05	JCH	PCF	FWS	TH
B	ISSUED FOR INTERNAL APPROVAL	21 DEC 04	RDB	AP	FWS	TH
A	ISSUED FOR REVIEW	23/09/04	JCH	AP	FWS	TH

amec

NAME	DATE	SIGNATURE
DRAWN BY JCH		
DESIGNED BY		
CHECKED BY		
DESIGN / AREA LEAD		
ENGINEERING MANAGER		
PROJECT MANAGER		
DESIGN AUTHORITY		

AMEC DRAWING NO F-145579-36-V-0034 REV H

AMEC PROJECT: 145579-FINAL DBVS DESIGN

U.S. DEPARTMENT OF ENERGY
Office of River Protection

BULK VITRIFICATION
OFF-GAS TREATMENT
SCRUB & STACK SECTIONS

SIZE F | BLDG NO | SHEET NO | DWG NO | REV
SCALE 1/4"=1' | CH | SHEET OF

RPP-24544
REV 1d

In making requests for transmittal of data by any electronic media, the Company receiving such data agrees that AMEC Americas Limited cannot be held responsible for errors of the data outside of or beyond the scope of our original agreement. Also, because data stored in electronic media or transmitted by electronic means can deteriorate undetected or be modified without the consultant's knowledge, the Company receiving data agrees that AMEC Americas Limited cannot be held liable for the compatibility, completeness or correctness of the data.

No.	AMEC Dwg. No.	REFERENCE DRAWINGS
1	F-145579-36-V-0008	OFF-GAS TREATMENT – SECONDARY WASTE AREA PLAN
2	F-145579-00-D-0005	SECONDARY WASTE AREA G.A. – PLAN
3	F-145579-00-D-0016	SECONDARY WASTE AREA G.A. – SECTIONS
4	F-145579-00-P-0008	SECONDARY WASTE STORAGE – PIPING LAYOUT
5	F-145579-00-P-0013	SECONDARY WASTE STORAGE – PIPING SECTIONS

HOLD1: STRUCTURAL STEEL FOR PIPE RACKS TO BE MODIFIED TO MATCH OFF-GAS VENT LINE MODIFICATIONS

NOTES:
1. BUTTERFLY VALVES ON TANK VENT LINES ARE NOT SHOWN DUE TO CONNECTION POINT BEING MOVED ONTO PRIMARY TANK AND VIEW IS BLOCKED.
2. SEE NOTES ON DRAWING F-145579-36-V-0008

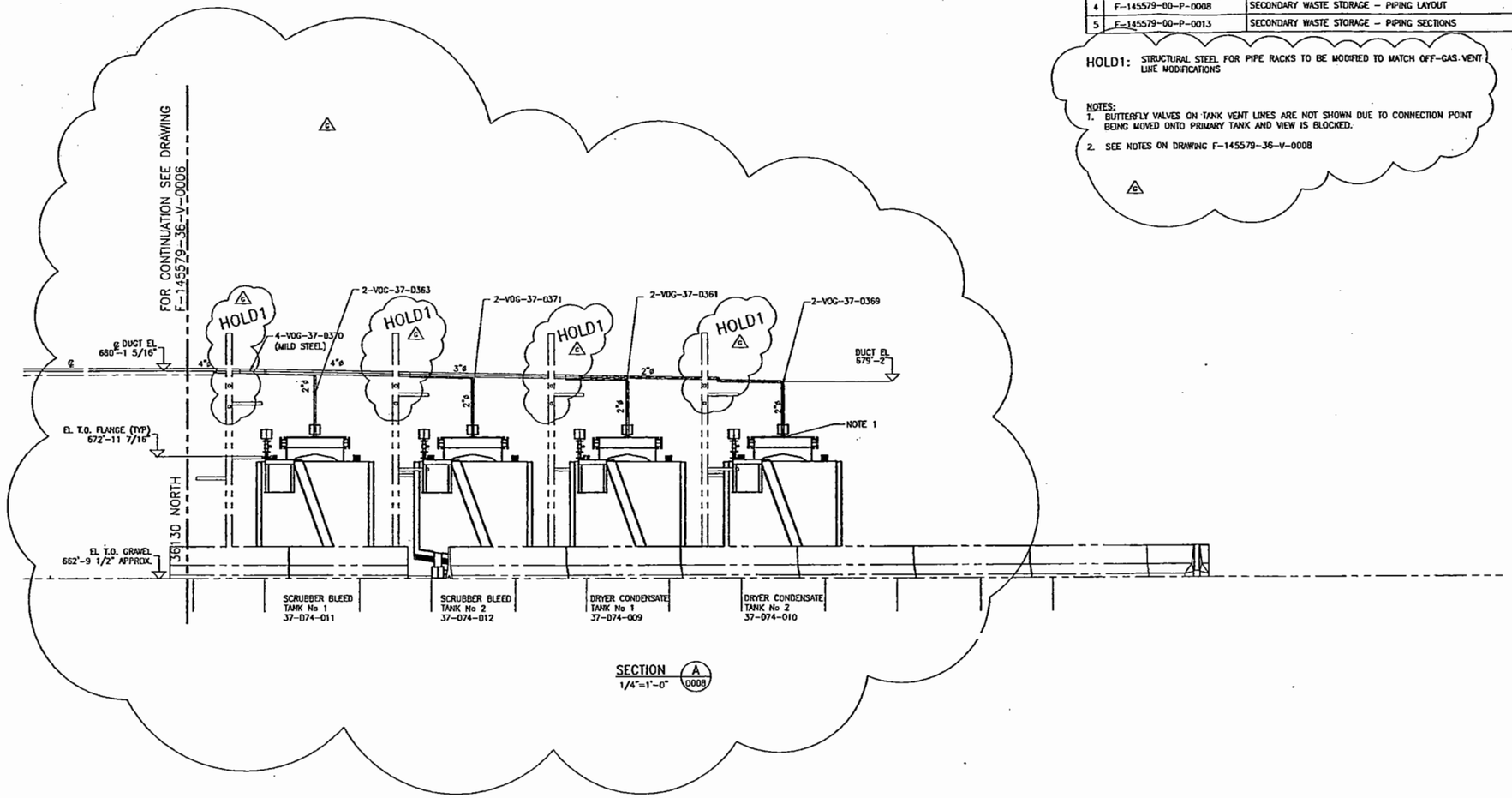

SECTION A 0008
1/4"=1'-0"

NOT APPROVED FOR CONSTRUCTION

Rev.	REVISION DESCRIPTION	Date	By	Chk'd	Approved Major Lead	Approved Proj Mgr
G	ISSUED FOR CH2M APPROVAL AND 50% DESIGN REPORT	19 MAR 06	TKD	JM	JL	JJ
F	ISSUED FOR OGTS DESIGN REVIEW	24 FEB 06	RRB	JM	SRB	JSC
E	ISSUED FOR DESIGN	16 DEC 05	RRB		FWS	JDS
D	ISSUED FOR CH2M HILL REVIEW/90% REPORT (AREA 36 ONLY)	15 MAR 05	RDB	PCF	FWS	TH
C	ISSUED FOR CH2M HILL REVIEW/90% REPORT (AREA 37 ONLY)	09 FEB 05	RDB	PCF	FWS	TH
B	ISSUED FOR INTERNAL APPROVAL	13 DEC 04	RDB	AP	FWS	TH
A	ISSUED FOR REVIEW	18 OCT 04	RDB	AP	FWS	JDS

AMEC DRAWING NO: F-145579-36-V-0035 REV: G

amec

AMEC PROJECT: 145579-FINAL DBVS DESIGN

U.S. DEPARTMENT OF ENERGY
Office of River Protection

BULK VITRIFICATION
OFF-GAS TREATMENT
SECONDARY WASTE AREA SECTION 'A'

NAME	DATE	COMPANY
DRAWN BY RDB	14/10/04	AMEC
TECHNICAL BY		
CHECKED BY		
TEAM / PROJ LEAD		
DISCIPLINE MANAGER		
PROJECT MANAGER		
DESIGN AUTHORITY		

SIZE F | BLDG NO | MODEL NO | DWG NO | REV
SCALE 1/4"=1'-0" | CAT | SHEET OF

DWG NO	TITLE
–	

DRAWING TRACEABILITY LIST

REF NUMBER	TITLE
–	

REFERENCES
NEXT USED ON

REV NO	DESCRIPTION	REV BY DATE	REV BY	CHECKED BY	CHK'D	COMPANY
–						

REVISIONS

RPP-24544
REV 1d

In making requests for transmittal of data by any electronic media, the Company receiving such data agrees that AMEC Americas Limited cannot be held responsible for users of the data outside of or beyond the scope of our original agreement. Also, because data stored in electronic media or transmitted by electronic means can deteriorate undetected or be modified without the consultant's knowledge, the Company receiving data agrees that AMEC Americas Limited cannot be held liable for the compatibility, completeness or correctness of the data.

No.	AMEC Dwg. No.	REFERENCE DRAWINGS
1	F-145579-36-V-0006	OFF-GAS TREATMENT - WET SCRUBBER SKID PLAN

NOTES.

1. SUPPORTS FOR EQUIPMENT PER VENDORS DETAILS
2. FOR PIPING SUPPORTS SEE DWG F-145579-36-V-0024
3. LOCATION OF PIPE SUPPORTS TO COME
4. PIPING AND CABLE TRAYS OMITTED FOR CLARITY
5. ALL VALVES SHOWN ON PIPING ARE TO BE "BUBBLE TIGHT" TYPE
6. HOLD 1 FOR VENDOR INFORMATION

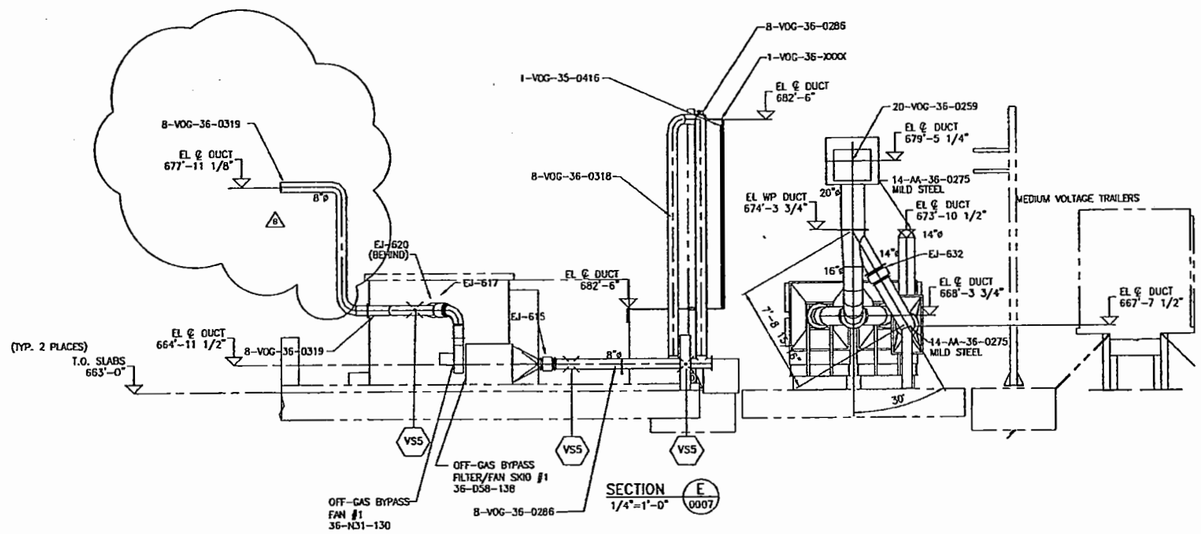

Rev.	REVISION DESCRIPTION	Date	By	Chk'd	Approved Design Lead	Approved Proj Mgr
B	RE-ISSUED FOR OGTS DESIGN REPORT	25 MAR 06	TNB	JM	JL	JSG
A	ISSUED FOR OGTS DESIGN REPORT	24 FEB 05	RRB	JM	SRB	JSG

AMEC DRAWING NO F-145579-36-V-0037 REV B

amec

AMEC PROJECT 145579-FINAL DBVS DESIGN

U.S. DEPARTMENT OF ENERGY
Office of River Protection

BULK VITRIFICATION
OFF-GAS TREATMENT
WET SCRUBBER SKID SECTIONS

NAME	DATE	SIGNATURE
DRAWN BY RDB	25 OCT 04	
DESIGNED BY		
CHECKED BY		
DESIGN / AREA LEAD		
DISCIPLINE MANAGER		
PROJECT MANAGER		
DESIGN AUTHORITY		

SIZE F | BLDG NO | MODEL NO | DWG NO | REV
SCALE 1/4"=1'-0" | EDT | SHEET | OF

DRAWING TRACEABILITY LIST

DWG NO	TITLE
–	

REFERENCES

REF NUMBER	TITLE
–	

NEXT USED ON

REVISIONS

NTD	REV NO	DESCRIPTION	REV BY DATE	REV BY	CHECKED BY	CHK'D	COMPANY
–	–						

RPP-24544
REV 1d

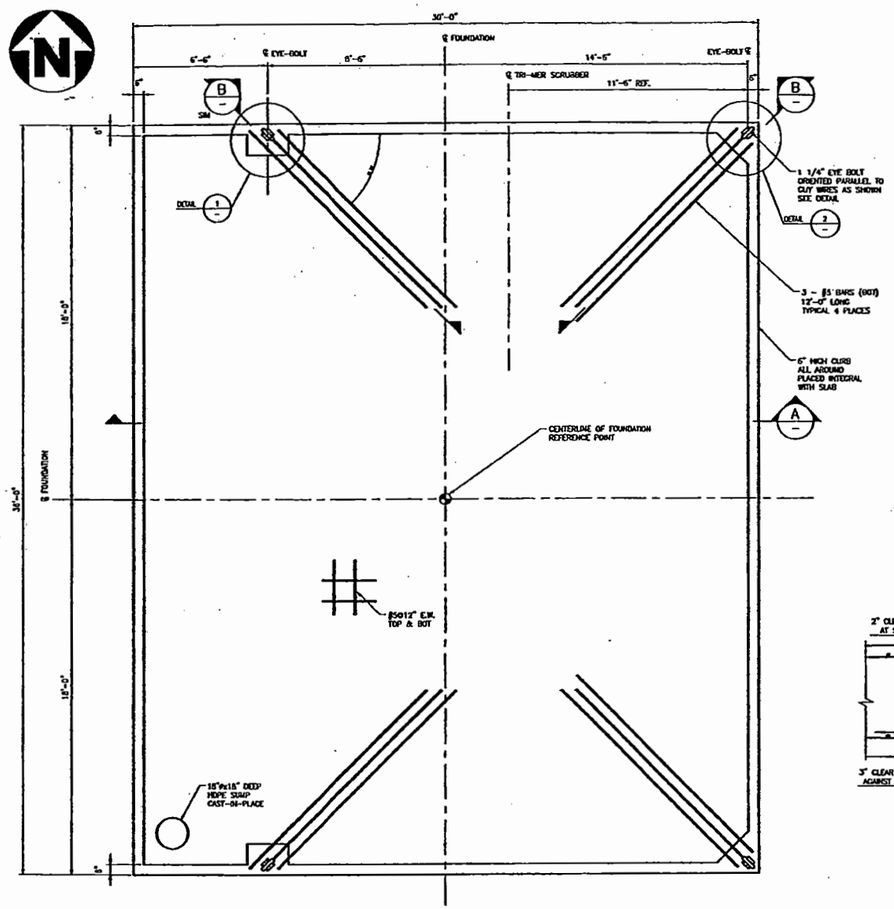

TRI-MER SCRUBBER
FOUNDATION #11 – PLAN
3/8"=1'-0"

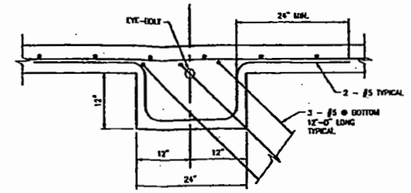

DETAIL 1
1"=1'-0"
TYPICAL 2 LOCATIONS

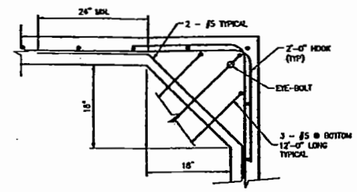

DETAIL 2
1"=1'-0"
TYPICAL 2 LOCATIONS

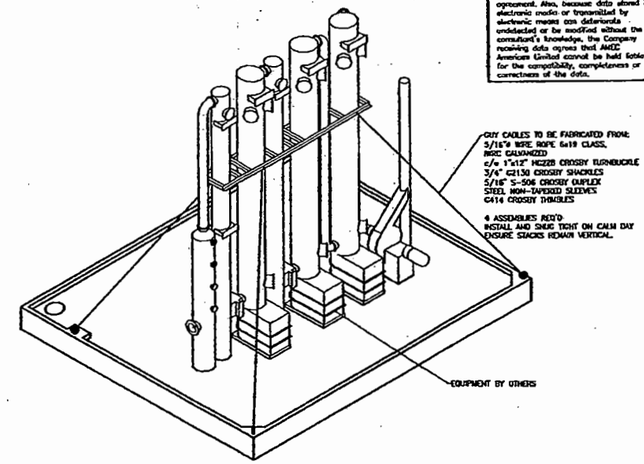

ISOMETRIC VIEW
N.T.S.

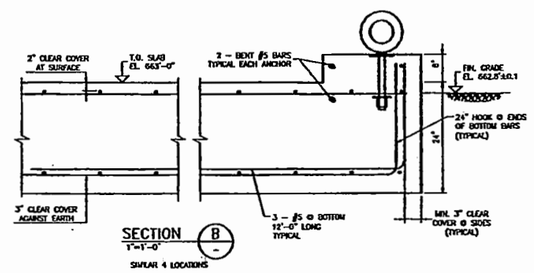

SECTION B
1"=1'-0"
SIMILAR 4 LOCATIONS

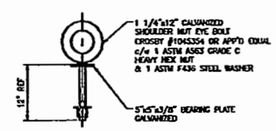

EYE-BOLT DETAIL
4 REQUIRED 1"=1'-0"

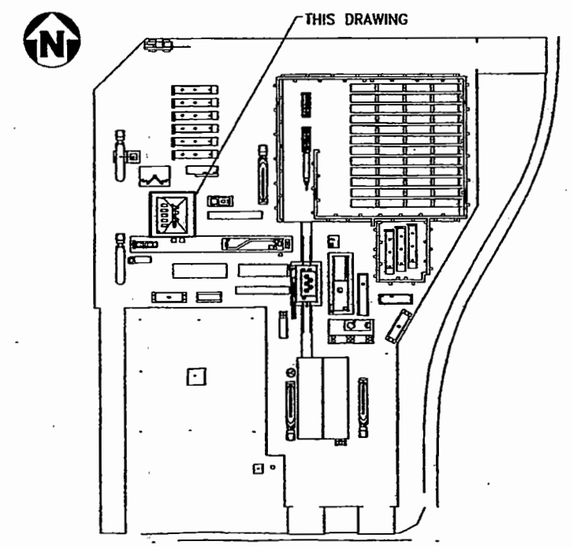

LOCATION PLAN

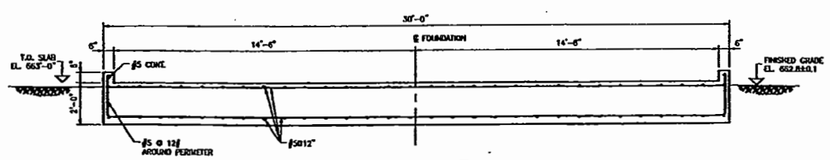

SECTION A
3/8"=1'-0"

NOTES:

1) FOR GENERAL NOTES, DESIGN CRITERIA, MATERIAL SPECIFICATIONS, AND FOUNDATION LOCATION REFER TO DRAWING H-14-106789 "BULK VITRIFICATION –CIVIL SITE IMPROVEMENTS"

2) DESIGN WEIGHTS OF SCRUBBER:
A) EMPTY WEIGHT: 6200 LB.
B) WITH LIQUIDS: 14,000 LB.

CONTAINMENT CRITERIA:
1000 GAL LIQUID = 1.6"
PLUS 25 YEAR RETURN/24HR RAINFALL = 1.6"
TOTAL = 3.2"

ACTUAL CURB HEIGHT = 6"

3) CONCRETE SHALL BE PROTECTED WITH RUST-OLEUM "OVERKOTE" AS FOLLOWS:
TOP OF SLAB: MINIMUM THICKNESS 0.25 INCH "OVERKOTE HD," LIGHT GREY
CURB TOPS AND INNER SURFACES: MINIMUM THICKNESS 0.125 INCH "OVERKOTE VERTICAL," SAFETY YELLOW
ALL INSTALLATIONS SHALL BE IN ACCORDANCE WITH MANUFACTURER'S PUBLISHED SPECIFICATIONS.

DWG NO	TITLE
D20668-01A REV3	PLAN VIEW: 1120 ACFM TRI-MER SCRUBBER SYSTEM (TRI-MER)
D20668-01 REV1	ELEVATION VIEWS: 1120 ACFM TRI-MER SCRUBBER SYSTEM (TRI-MER)

DRAWING TRACEABILITY LIST

REF NUMBER	TITLE
NEXT USED ON H-14-106789	REFERENCES

REV NO	DESCRIPTION	REV BY DATE	DRAWN BY	CHECKED CHECK	ENGINEERING	CONSTRUCTION
1	ADDED PROTECTIVE COATING TO CONCRETE AND REVISED RAINFALL DATA	17 Aug 99	D.L. WHITLEY	PAUL MEYER		

REVISIONS

THIS DRAWING FORMERLY ISSUED AS AMEC DRAWING F-143643-00-C-0010.

amec

NAME	DATE
D.P. KROEKER	
D.L. WHITLEY	
P. MEYER	
J. STEPHENS	

AMEC PROJECT: 145579-FINAL DBVS DESIGN

U.S. DEPARTMENT OF ENERGY
Office of River Protection

BULK VITRIFICATION
TRI-MER SCRUBBER
FOUNDATION – PLAN&DETAILS

SIZE	BLDG NO	SHEET NO	DWG NO	REV
F	241G	0900	H-14-106795	1

SCALE AS SHOWN | 821145 | SHEET 1 OF 1

DWG NO H-14-106795 REV 1 SH 1 OF 1

S

CH2M HILL ENGINEERING CHANGE NOTICE	1a. ECN 722545 R 0
Page 1 of 4 ☒ DM ☐ FM ☐ TM	1b. Proj. ECN - - R

2. Simple Modification ☒ Yes ☐ No	3. Design Inputs – For full ECNs, record information on the ECN-1 Form (not required for Simple Modifications).		4. Date 12/1/04
5. Originator's Name, Organization, MSIN, & Phone No. Doug Chenault DMJM Technology MSIN H050 375-9771		6. USQ Number No. - - - R - ☒ N/A	7. Related ECNs N/A
8. Title Final DBVS Design Site Improvement Package	9. Bldg. / Facility No. 241G/DBVS	10. Equipment / Component ID N/A	11. Approval Designator QE
12. Engineering Documents/Drawings to be Changed (Incl. Sheet & Rev. Nos.) Drawing H-14-106795,Sheet 1, Revision 1 (continued on sheet 3)		13. Safety Designation ☐ SC ☐ SS ☒ GS ☐ N/A	14. Expedited/Off-Shift ECN? ☐ Yes ☒ No
15a. Work Package Number N/A	15b. Modification Work Completed N/A Responsible Engineer / Date	15c. Restored to Original Status (TM) N/A Responsible Engineer / Date	16. Fabrication Support ECN? ☐ Yes ☒ No

17. Description of the Change (Use ECN Continuation pages as needed)

The current design of the TRI-MER Scrubber (Foundation #11) identifies provisions for a 18" dia. x 18" deep sump to be cast-in-place at the southwest corner of the foundation. This sump area is provided as a collection point from which rain water or potential leakage during system operation, may be removed. The current design provides the general requirement for the sump, however further information, including a change in the location of the sump are necessary to optimize the discharge option, minimize installation costs and define the local reinforcing steel requirements.

1. Revise the TRI-MER Scrubber Foundation #11 - Plan located in Zone D-7 to relocate the sump from the southwest location on the slab to the northeast location, as shown on Sheet 4 of this ECN.

2. Add rebar at the revised sump location, as shown on Sheet 4 of this ECN.

3. Revise the text font for the angle showing the orientation of the special rebar located at the lifting points, as shown on Sheet 4 of this ECN.

18. Justification of the Change (Use ECN Continuation pages as needed)

The change is provided to reduce the distance from the sump to the Secondary Waste Storage Tanks, which results in an overall reduction in the length of the hose-in-hose required and a significant reduction in cost. The change does not affect the design calculations.

USQ rationale for N/A in Block #6, based on letter 04-TED-082/ 0402560 on 10-05-04 from DOE ORP to CH2M HILL Hanford Group, Inc. titled, " APPROVAL OF LIMITED CONSTRUCTION FOR DEMONSTRATION BULK VITRIFICATION SYSTEM PRIOR TO APPROVAL OF PRELIMINARY SAFETY ANALYSIS".

19. ECN Category

☐ Direct Revision
☒ Supplemental
☐ Void/Cancel

ECN Type

☐ Supercedure
☐ Revision

20. Distribution

Name	MSIN	Name	MSIN
N/A			

Release Stamp

JAN 0 7 2005
DATE:
HANFORD RELEASE
STA: 3
ID: 18

A-6003-563.1 (09/04)

CH2M HILL ENGINEERING CHANGE NOTICE	1a. ECN 722545 R 0
Page 2 of 4 ☒ DM ☐ FM ☐ TM	1b. Proj. ECN - - R

21. Revisions Planned (Include a brief description of the contents of each revision)
N/A

Note: All revisions shall have the approvals of the affected organizations as identified in block 11 "Approval Designator," on page 1 of this ECN.

22. Design Basis Documents
☐ Yes ☒ No

23. Commercial Grade Item Dedication Numbers (associated with this design change)
N/A

24. Engineering Data Transmittal Numbers (associated with this design change, e.g., new drawings, new documents)
N/A

25. Other Non Engineering (not in HDCS) documents that need to be modified due to this change

Type of Document	Document Number	Update Completed On	Responsible Engineer (print/sign and date)
Alarm Response Procedure	N/A		
Operations Procedure	N/A		
Maintenance Procedure	N/A		
Type of Document	**Document Number**	**Type of Document**	**Document Number**
N/A			

26. Field Change Notice(s) Used?
☐ Yes ☒ No
If Yes, Record information on the ECN-2 Form, attach form(s), include a description of the interim resolution on ECN Page 1, block 17, and identify permanent changes.

NOTE: ECNs are required to record and approve all FCNs issued. If the FCNs have not changed the original design media then they are just incorporated into the design media via an ECN. If the FCN did change the original design media then the ECN will include the necessary engineering changes to the original design media.

27. Design Verification Required?
☐ Yes ☒ No
If Yes, as a minimum attach the one page checklist from TFC-ENG-DESIGN-P-17.

28. Approvals

Facility/Project Signatures		Date	A/E Signatures		Date
Design Authority	G.P. Janicek	1/7/05	Originator/Design Agent	Doug Chenault	1-5-05
Resp. Engineer	D.H. Shuford	1/7/05	Professional Engineer	Michael R. Custer	1-6-05
Resp. Manager	M.J. Suley	1/7/05	Project Engineer	Kurt McCracken	1/6/05
Quality Assurance	R.R. True SE CARLSON FOR RR TRUE BY TELECON	1/7/05	Quality Assurance	Ross Truitt	1/6/05
IS&H Engineer			Safety		
NS&L Engineer			Designer		
Environ. Engineer	J.D Guberski	1/7/05	Environ. Engineer		
Engineering Checker	Checking completed by A/E		Other		
Other			Other	Checker: Paul Meyer (AMEC)	1-6-05
Other			DEPARTMENT OF ENERGY / OFFICE OF RIVER PROTECTION		
Other			Signature or a Control Number that tracks the Approval Signature		
Other					
Other			ADDITIONAL SIGNATURES		
Other					
Other					

A-6003-563.1 (09/04)

CH2M HILL ENGINEERING CHANGE NOTICE CONTINUATION SHEET	1a. ECN 722545 R 0
Page 3 of 4	1b. Proj. ECN - - R

Document/Drawing No. Drawing H-14-106795 Sheet 1 Revision 1

Block 12 (cont.)
Drawing title, "BULK VITRIFICATION, TRI-MER SCRUBBER FOUNDATION – PLANS AND DETAILS".

Note: An AutoCAD page may be used in place of this form (the header section items must be included on the AutoCAD page).

A-6003-563.1 (09/04)

ENGINEERING CHANGE NOTICE CONTINUATION SHEET

PAGE 4 OF 4

ECN	722545 R0
DATE	11-30-04

DRAWING NO	SH	REV
H-14-106795	1	1

"WAS"

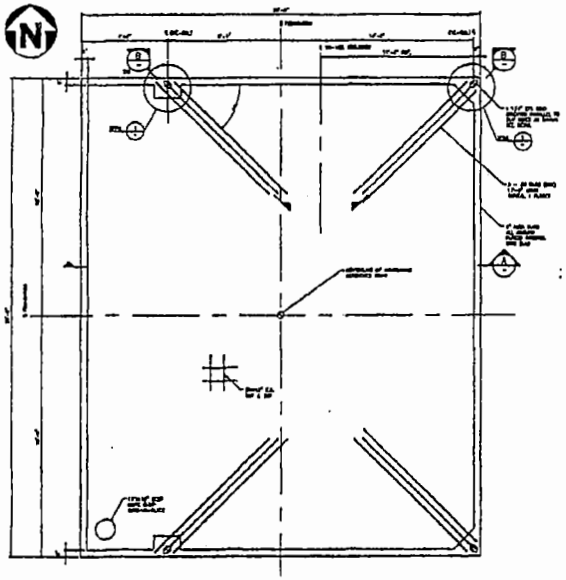

TRI-WEB SCRUBBER
FOUNDATION #11 - PLAN

"IS"

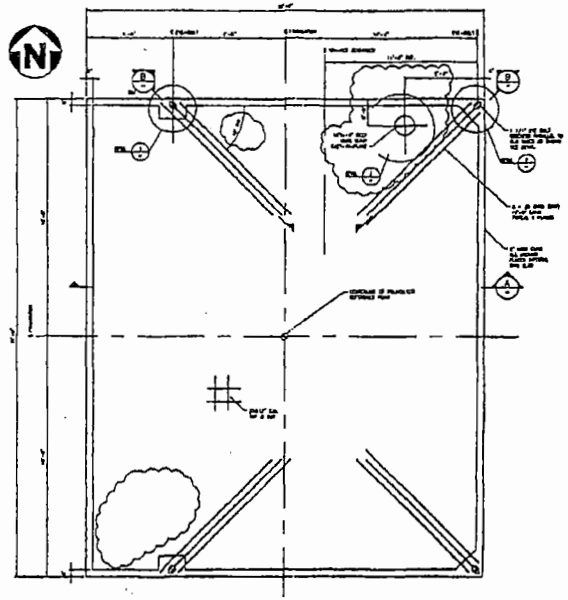

TRI-WEB SCRUBBER
FOUNDATION #11 - PLAN

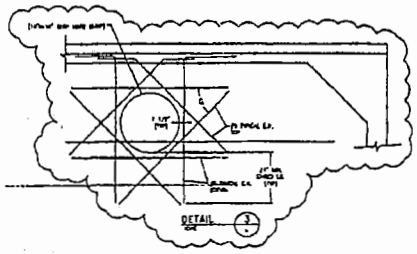

DETAIL

In making requests for transmittal of data by any electronic media, the Company receiving such data agrees that AMEC Americas Limited cannot be held responsible for users of the data outside of or beyond the scope of our original agreement. Also, because data stored in electronic media or transmitted by electronic means can deteriorate undetected or be modified without the consultant's knowledge, the Company receiving data agrees that AMEC Americas Limited cannot be held liable for the compatibility, completeness or correctness of the data.

RPP-24544
REV 1d

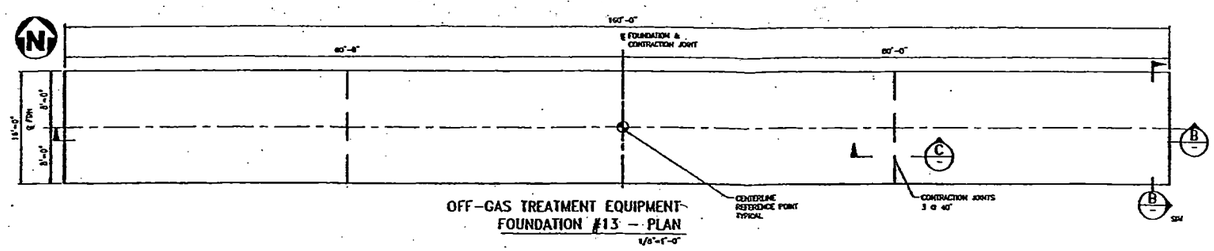

OFF-GAS TREATMENT EQUIPMENT FOUNDATION #13 – PLAN
1/8"=1'-0"

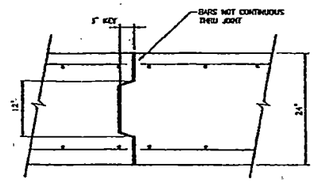

CONTRACTION JOINT
TYPICAL 3 LOCATIONS
SECTION C
1"=1'-0"

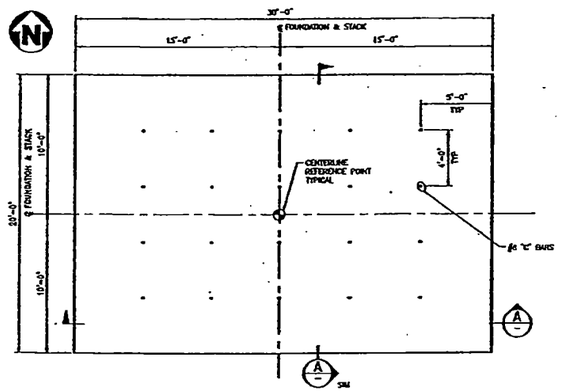

OFF-GAS STACK FOUNDATION #10 – PLAN
1/4"=1'-0"

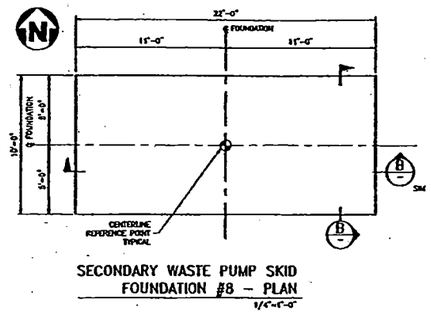

SECONDARY WASTE PUMP SKID FOUNDATION #8 – PLAN
1/4"=1'-0"

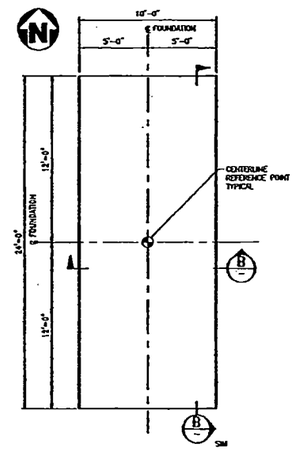

COMPRESSED AIR SKID FOUNDATION #9 – PLAN
1/4"=1'-0"

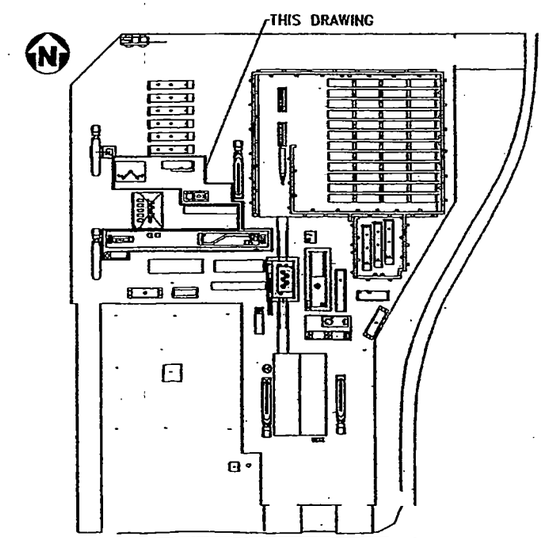

LOCATION PLAN

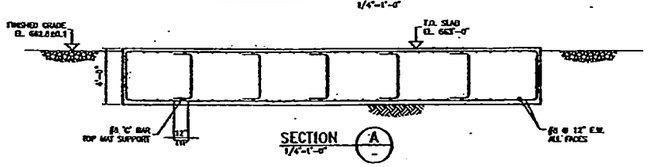

SECTION A
1/4"=1'-0"

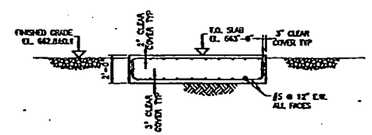

SECTION B
1/4"=1'-0"

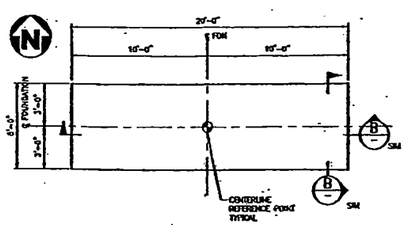

LIQUID AMMONIA STORAGE TANK FOUNDATION #12 – PLAN
1/4"=1'-0"

NOTES:

FOR GENERAL NOTES, DESIGN CRITERIA, MATERIAL SPECIFICATIONS, AND FOUNDATION LOCATIONS REFER TO DRAWING H-14-106789 "BULK VITRIFICATION -CIVIL SITE IMPROVEMENTS"

DWG NO	TITLE	REF NUMBER	TITLE
DRAWING TRACEABILITY LIST		REFERENCES	
		NEXT USED ON H-14-106789	

REV	DATE	DESCRIPTION	APPD
REVISIONS			

THIS DRAWING FORMERLY ISSUED AS AMEC DRAWING F-143643-00-C-0011.

amec

NAME	DATE	COMPANY
D.P. KROEKER		
D.L. WHITLEY		
P. MEYER		
P. MEYER		
P. MEYER		
J. STEPHENS		

PROJ. PROJECT: 145579-FINAL DBVS DESIGN

U.S. DEPARTMENT OF ENERGY
Office of River Protection

BULK VITRIFICATION
OFF-GAS AREA
FDNS – PLANS & SECTIONS

SIZE F | SUBJ NO 241G | PROJ NO 0900 | DWG NO H-14-106796 | REV 0

SCALE AS SHOWN | BY 821145 | SHEET 1 OF 1

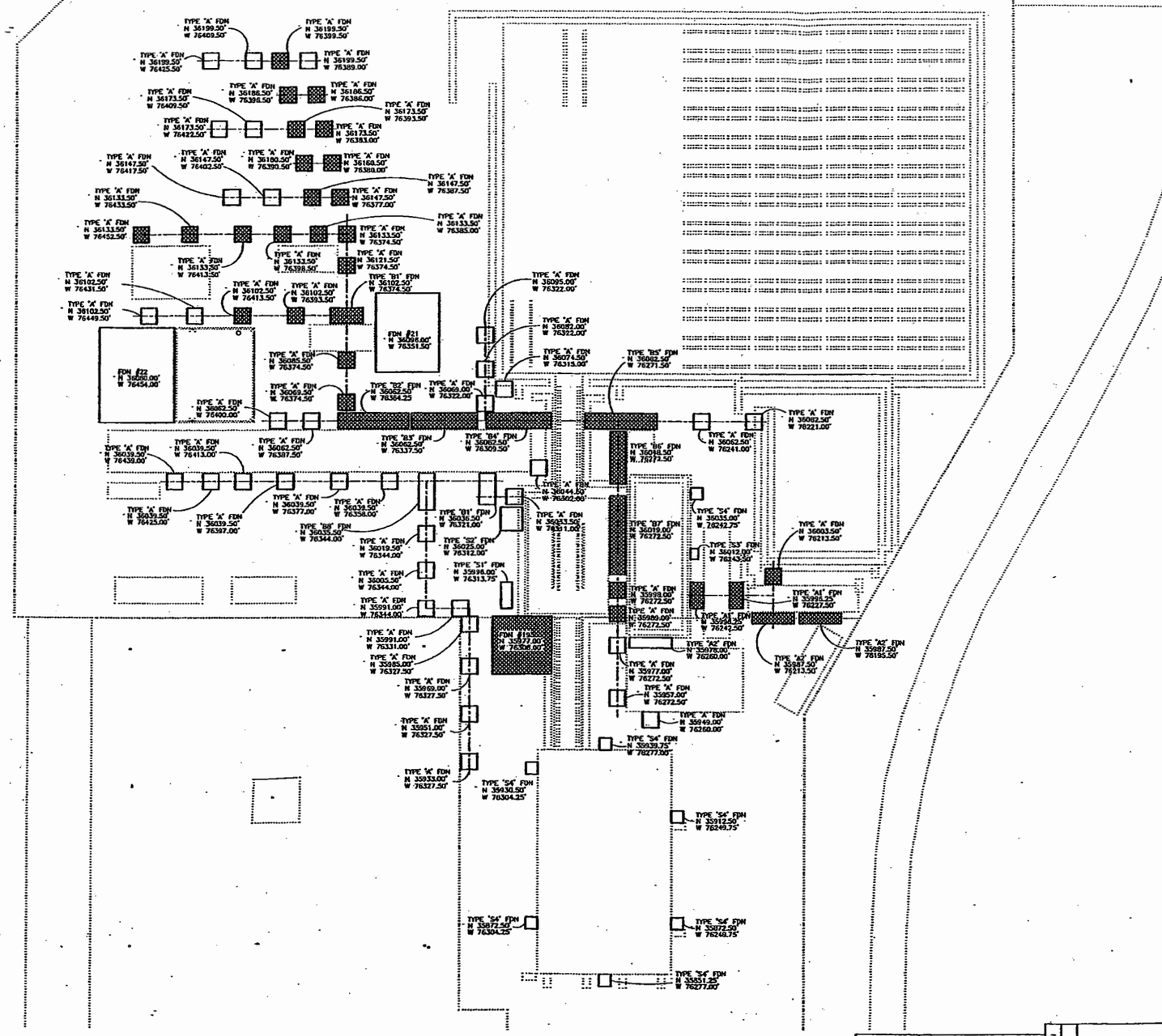

In making requests for transmittal of data by any electronic media, the Company receiving such data agrees that AMEC Americas Limited cannot be held responsible for users of the data outside of or beyond the scope of our original agreement. Also, because data stored in electronic media or transmitted by electronic means can deteriorate undetected or be modified without the consultant's knowledge, the Company receiving data agrees that AMEC Americas Limited cannot be held liable for the compatibility, completeness or correctness of the data.

NOTES:

1. ALL CONSTRUCTION SHALL CONFORM TO CONSTRUCTION SPECIFICATION 145579-G-SP-001.

2. FOUNDATION DETAILS FOR #19, #21 AND #22 ARE SHOWN ON DRAWING H-14-106800, OTHER FOUNDATION DETAILS ARE SHOWN ON DRAWINGS H-14-106799 & H-14-106801.

3. THE FOLLOWING SPECIFIC REQUIREMENTS APPLY TO CAST-IN-PLACE CONCRETE. REFER TO CONSTRUCTION SPECIFICATION 145579-G-SP-001 SECTION 03300 FOR DETAILS.

   a) MINIMUM COMPRESSIVE STRENGTH = 4000psi @ 28 DAYS.
   b) MAXIMUM WATER/CEMENT RATIO = 0.5.
   c) AIR CONTENT SHALL BE 5%-8%.

4. ALL DISTURBED TOP LAYER OF COMPACTED CRUSHED GRAVEL SHALL BE REPLACED BETWEEN FOUNDATIONS TO NOMINAL ELEVATION 662.8±0.2 FEET.

MECHANICAL COMPACTION OF THE TOP SURFACE OF THE GRANULAR BACKFILL IS NOT REQUIRED FOR SPACES BETWEEN FOUNDATIONS WHERE SPACE IS LESS THAN 12" WIDE. FILL TO ELEVATION 662.8 ±0.1 FEET.

ALTERNATIVELY, THE SPACE MAY BE FILLED WITH UNREINFORCED CONCRETE. TOP OF CONCRETE TO BE 663.000 MATCHING ADJACENT FOUNDATIONS. EXISTING SOLID CONCRETE FOUNDATIONS MAY BE USED AS FORMS FOR NEW CONCRETE FOUNDATIONS IF THE SECOND ALTERNATIVE IS CHOSEN; PROVIDE A BOND BREAKER (6 MIL POLYETHYLENE SHEET, OR ½" THICK FIBERBOARD) BETWEEN NEW AND OLD CONCRETE.

5. COORDINATES ARE BASED ON HANFORD 200 WEST DATUM. CONTROL POINTS ARE RR SPIKES IN ASPHALT ON 13TH ST (DBVS-1 AND DBVS-2) SEE DRAWING H-14-106788 FOR LOCATIONS.

6. COORDINATES SHOWN ARE CENTERLINE REFERENCE POINTS OF EACH FOUNDATION.

7. FOR FOUNDATIONS #1 THROUGH #18 LOCATIONS SEE DRAWING H-14-106789. (INSTALLED UNDER SEPARATE CONTRACT)

8. FOR FOUNDATION #20 (ICV BOX ASSEMBLY BUILDING) LOCATION AND DETAILS SEE DRAWING H-14-106797.

9. SHADED FOUNDATIONS ARE SUBJECT TO THE REQUIREMENTS OF THE RESOURCE CONSERVATION AND RECOVERY ACT OF 1976. (RCRA)

10. EXISTING 4/0 AWG GROUND CONDUCTORS ARE LOCATED APPROXIMATELY 30 INCHES BELOW FINISHED GRADE. REFER TO DRAWING F-145579-00-E-0500 FOR APPROXIMATE LOCATIONS. RE-ROUTE AND REPAIR ANY DAMAGE TO EXISTING GROUNDING CONDUCTORS AS DETAILED ON THE ELECTRICAL GROUNDING DRAWINGS AND IN THE CONSTRUCTION SPECIFICATION.

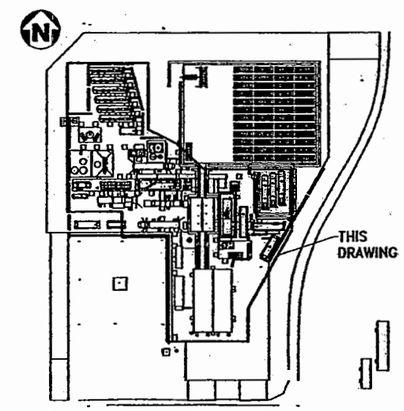

LOCATION PLAN

Rev.	REVISION DESCRIPTION	Date	By	CHK'D	Approved	Eng Mgr
G	ISSUED FOR CONSTRUCTION	13 APR 05	DPK		PM	TH
D	ISSUED FOR CHOM HILL APPROVAL & 90% REPORT	01 APR 05	DPK		PM	TH
C	ISSUED FOR CHOM HILL REVIEW	01 MAR 05	DPK		PM	TH
B	ISSUED FOR INTERNAL APPROVAL	15 FEB 05	DPK		PM	TH
A	ISSUED FOR INTERNAL REVIEW	27 JAN 05	DPK		PM	TH

H-14-106798 | 0

amec

145579-FINAL DBVS DESIGN

U.S. DEPARTMENT OF ENERGY
Office of River Protection

BULK VITRIFICATION
MINOR FOUNDATIONS
GENERAL ARRANGEMENT

F | 241G | 0110 | H-14-106798 | 0

scale 1/16"=1'-0" | 821582 | SHEET 1 of 1

DWG NO	TITLE
DRAWING TRACEABILITY LIST	

REF NUMBER	TITLE
REFERENCES	
NEXT USED ON	

REV NO	DESCRIPTION	REV BY	REV DATE	CHECKED BY	DATE	CHECKED BY
REVISIONS						

In making requests for transmittal of data by any electronic media, the Company receiving such data agrees that AMEC Americas Limited cannot be held responsible for errors of the data outside of or beyond the scope of our original agreement. Also, because data stored in electronic media or transmitted by electronic means can deteriorate undetected or be modified without the consultant's knowledge, the Company receiving data agrees that AMEC Americas Limited cannot be held liable for the compatibility, completeness or correctness of the data.

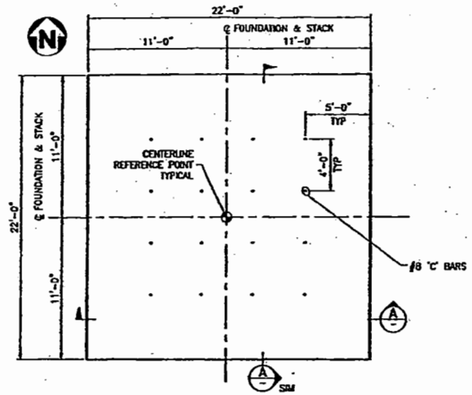

OGTS INLET STACK
FOUNDATION #19 – PLAN
1/4"=1'-0"

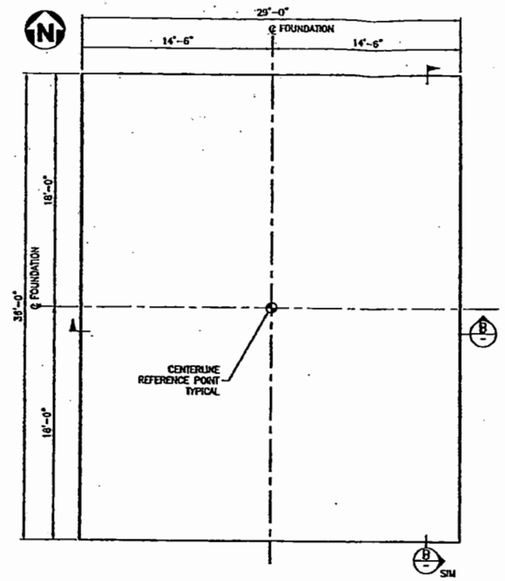

WEST REAGENT TANK
FOUNDATION #22 – PLAN
1/4"=1'-0"

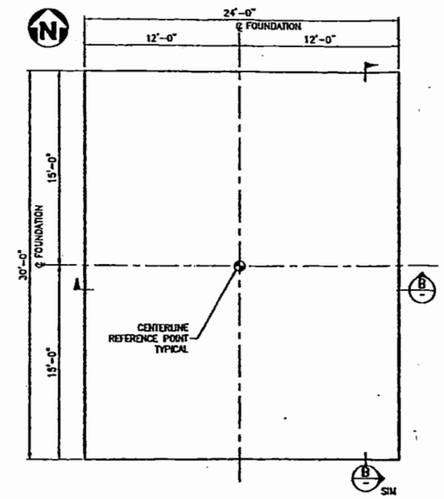

EAST REAGENT TANK
FOUNDATION #21 – PLAN
1/4"=1'-0"

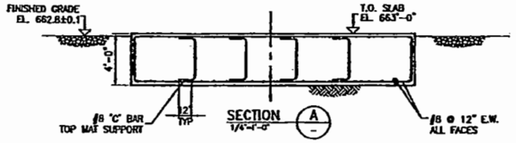

SECTION A
1/4"=1'-0"

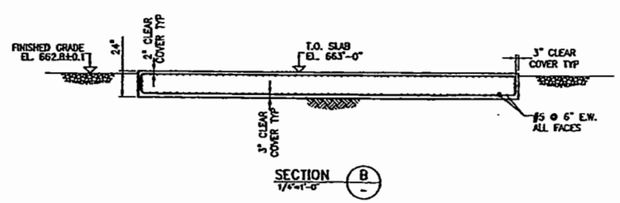

SECTION B
1/4"=1'-0"

NOTES:

FOR GENERAL NOTES, DESIGN CRITERIA & MATERIAL SPECIFICATIONS REFER TO DRAWING H-14-105789 "BULK VITRIFICATION – CIVIL SITE IMPROVEMENTS"

1. FOR FOUNDATION LOCATIONS SEE DRAWING H-14-106798.

2. EQUIPMENT AND STEEL FRAMING WILL BE SECURED TO FOUNDATIONS WITH DRILLED AND GROUTED ANCHORS. (REFER TO VENDOR EQUIPMENT DRAWINGS FOR ANCHOR SIZE REQUIREMENTS) ANCHORS TO BE ASTM A36 THREADED RODS C/W 1-ASTM A563 HEAVY HEX GRADE C NUT AND 1-ASTM F436 HARDENED STEEL WASHER. SECURE ANCHORS WITH HILTI HY-150 ADHESIVE IN ACCORDANCE WITH MANUFACTURER'S WRITTEN INSTRUCTIONS.

3. CONCRETE SHALL CONFORM TO CONSTRUCTION SPECIFICATION 145579-C-SP-001 SECTION 3300 "CAST-IN-PLACE CONCRETE".

THE FOLLOWING SPECIFIC REQUIREMENTS APPLY TO CAST-IN-PLACE CONCRETE. REFER TO THE CONSTRUCTION SPECIFICATION FOR DETAILS.

a) MINIMUM COMPRESSIVE STRENGTH @ 28 DAYS = 4000 PSI
b) MAXIMUM WATER/CEMENT RATIO = 0.5
c) AIR CONTENT SHALL BE 5% – 8%.
d) CONSTRUCTION AND CONTRACTION JOINTS SHALL BE PER ACI 224.3R AND ACI 302.1R.

4. COMPACTION OF NATIVE MATERIAL SHALL CONFORM TO CONSTRUCTION SPECIFICATION 145579-C-SP-001 SECTION 02220.

5. FOR OGTS STACK FOUNDATION DESIGN SEE CALCULATION 145579-C-CA-015.

6. FOR REAGENT TANK FOUNDATIONS DESIGN SEE CALCULATION 145579-C-CA-016.

Rev.	REVISION DESCRIPTION	Date	By	Chk'd	Appr. Eng.	Appr. Mgr.
0	ISSUED FOR CONSTRUCTION	13 APR 05	DPK		PM	TH
D	ISSUED FOR CH2M HILL APPROVAL & SOA REPORT	01 APR 05	DPK		PM	TH
C	ISSUED FOR CH2M HILL REVIEW	18 FEB 05	DPK		PM	TH
B	ISSUED FOR INTERNAL APPROVAL	14 FEB 05	DPK		PM	TH
A	ISSUED FOR INTERNAL REVIEW	04 FEB 05	DPK		PM	TH

H-14-106800 REV 0

amec

145579-FINAL DBVS DESIGN

U.S. DEPARTMENT OF ENERGY
Office of River Protection

BULK VITRIFICATION
MISCELLANEOUS FOUNDATIONS
PLANS & DETAILS

F 241G 0110 H-14-106800 0

SCALE 1/4"=1'-0" CET 821582 SHEET 1 OF 1

DRAWING TRACEABILITY LIST: DWG NO | TITLE | REF NUMBER | TITLE | NEXT USED ON

REFERENCES

REVISIONS

CH2M HILL ENGINEERING CHANGE NOTICE	1a. ECN 723832 R 0
Page 1 of 5 ☒ DM ☐ FM ☐ TM	1b. Proj. ECN - - R

2. Simple Modification ☒ Yes ☐ No	3. Design Inputs – For full ECNs, record information on the ECN-1 Form (not required for Simple Modifications)		4. Date 05-03-06
5. Originator's Name, Organization, MSIN, & Phone No. Michael R. Custer DMJM H&N MSIN H050 509-375-7863		6. USQ Number No. - - - R - ☒ N/A	7. Related ECNs N/A
8. Title DBVS Stack Foundation	9. Bldg. / Facility No. 241G/DBVS	10. Equipment / Component ID N/A	11. Approval Designator QE
12. Engineering Documents/Drawings to be Changed (Incl. Sheet & Rev. Nos.) H-14-106796, Sheet 1,Revision 0 (continued on page 3)		13. Safety Designation ☐ SC ☐ SS ☒ GS ☐ N/A	14. Expedited/Off-Shift ECN? ☐ Yes ☒ No

15a. Work Package Number	15b. Modification Work Completed	15c. Restored to Original Status (TM)	16. Fabrication Support ECN?
N/A	N/A Responsible Engineer / Date	N/A Responsible Engineer / Date	☐ Yes ☒ No

17. **Description of the Change** (Use ECN Continuation pages as needed)

The current design of the OGTS Stack foundation, shown on drawing H-14-106796, revision 0, requires the dimensions of the foundation to be 20'-0" x 30'-0" x 4'-0" deep. Subsequent analysis and design completed for the OGTS Stack by the vendor requires an increase in the size of the foundation. The revised plan dimensions of the foundation increased to 24'-0" x 36'-0" to accomodate the larger area required for the layout of the OGTS Stack and exhaust fans. The increased depth to 7'-4" and revision of the foundation reinforcing steel is required to accommdate the anchorage for the OGTS stack and satisfy structural requirements.

1) Revise the drawing plan and section for OGTS Stack foundation #10 to provide the revised dimensions and reinforcing steel requirements, as shown on sheet 4 of this ECN.

18. **Justification of the Change** (Use ECN Continuation pages as needed)

The changes described are required to satisfy the latest design developments received from the OGTS Stack vendor and to satisfy code requirements for the foundation. These changes are the results of information provided in the vendor design calculation from Thompson Mechanical, Calculation number 4697.1, dated March 6, 2006, titled "Demonstration Bulk Vitrification System, (DBVS), Off-Gas Treatment System , (OGTS), Steel Stack". (Transmittal DMJM H&N to AMEC E&E No. A77977-TTC-630). and 145579-C-CA-015, Revision 2.

19. **ECN Category**

☐ Direct Revision
☒ Supplemental
☐ Void/Cancel

ECN Type

☐ Supersedure
☐ Revision

20. **Distribution**

Name	MSIN	Name	MSIN

Release Stamp

A-6003-563.1 (09/05)

CH2M HILL ENGINEERING CHANGE NOTICE	1a. ECN 723832 R 0
Page 2 of 5 ☒ DM ☐ FM ☐ TM	1b. Proj. ECN - - R

21. **Revisions Planned** (Include a brief description of the contents of each revision)
N/A

Note: All revisions shall have the approvals of the affected organizations as identified in block 11 "Approval Designator," on page 1 of this ECN.

22. **Commercial Grade Item Dedication Numbers** (associated with this design change)
N/A

23. **Engineering Data Transmittal Numbers** (associated with this design change, e.g., new drawings, new documents)
N/A

24. **Other Non Engineering (not in HDCS) documents that need to be modified due to this change**

Type of Document	Document Number	Update Completed On	Responsible Engineer (print/sign and date)
Alarm Response Procedure			
Operations Procedure			
Maintenance Procedure			

Type of Document	Document Number	Type of Document	Document Number

25. **Field Change Notice(s) Used?**
☐ Yes ☐ No
If Yes, Record Information on the ECN-2 Form, attach form(s), include a description of the interim resolution on ECN Page 1, block 17, and identify permanent changes.

NOTE: ECNs are required to record and approve all FCNs issued. If the FCNs have not changed the original design media then they are just incorporated into the design media via an ECN. If the FCN did change the original design media then the ECN will include the necessary engineering changes to the original design media.

26. **Design Verification Required?**
☐ Yes ☐ No
If Yes, as a minimum attach the one page checklist from TFC-ENG-DESIGN-P-17.

27. **Approvals**

Facility/Project Signatures		Date	A/E Signatures		Date
Resp. Engineer	D.H. Shuford	8 May 06	Originator/Design Agent	Michael R Curtis	5/8/06
Resp. Manager	MJ Sutey	5/8/06	Professional Engineer		
Quality Assurance			Project Engineer		
IS&H Engineer			Quality Assurance		
NS&L Engineer			Safety		
Environ. Engineer			Designer		
Engineering Checker	A.H. Friberg	5/8/06	Environ. Engineer		
Other			Other		
Other			Other		
Other			DEPARTMENT OF ENERGY / OFFICE OF RIVER PROTECTION		
Other			Signature or a Control Number that tracks the Approval Signature		
Other					
Other			ADDITIONAL SIGNATURES		
ther					
Other					

A-6003-563.1 (09/05)

CH2M HILL ENGINEERING CHANGE NOTICE CONTINUATION SHEET	1a. ECN 723832 R 0
Page 3 of 5	1b. Proj. ECN - - R

Document/Drawing No. H-14-106796 Sheet 1 Revision 0

Block 12 (cont.)

Drawing titled, "BULK VITRIFICATION, OFF-GAS AREA, FNDS – PLANS & SECTIONS".

Note: An AutoCAD page may be used in place of this form (the header section items must be included on the AutoCAD page).

CH2M HILL ENGINEERING CHANGE NOTICE CONTINUATION SHEET	1a. ECN 723832 R 0
PAGE 4 OF 5	1b. Proj. ECN – – R

Document/Drawing No. H-14-106796 Sheet 1 Revision 0

WAS

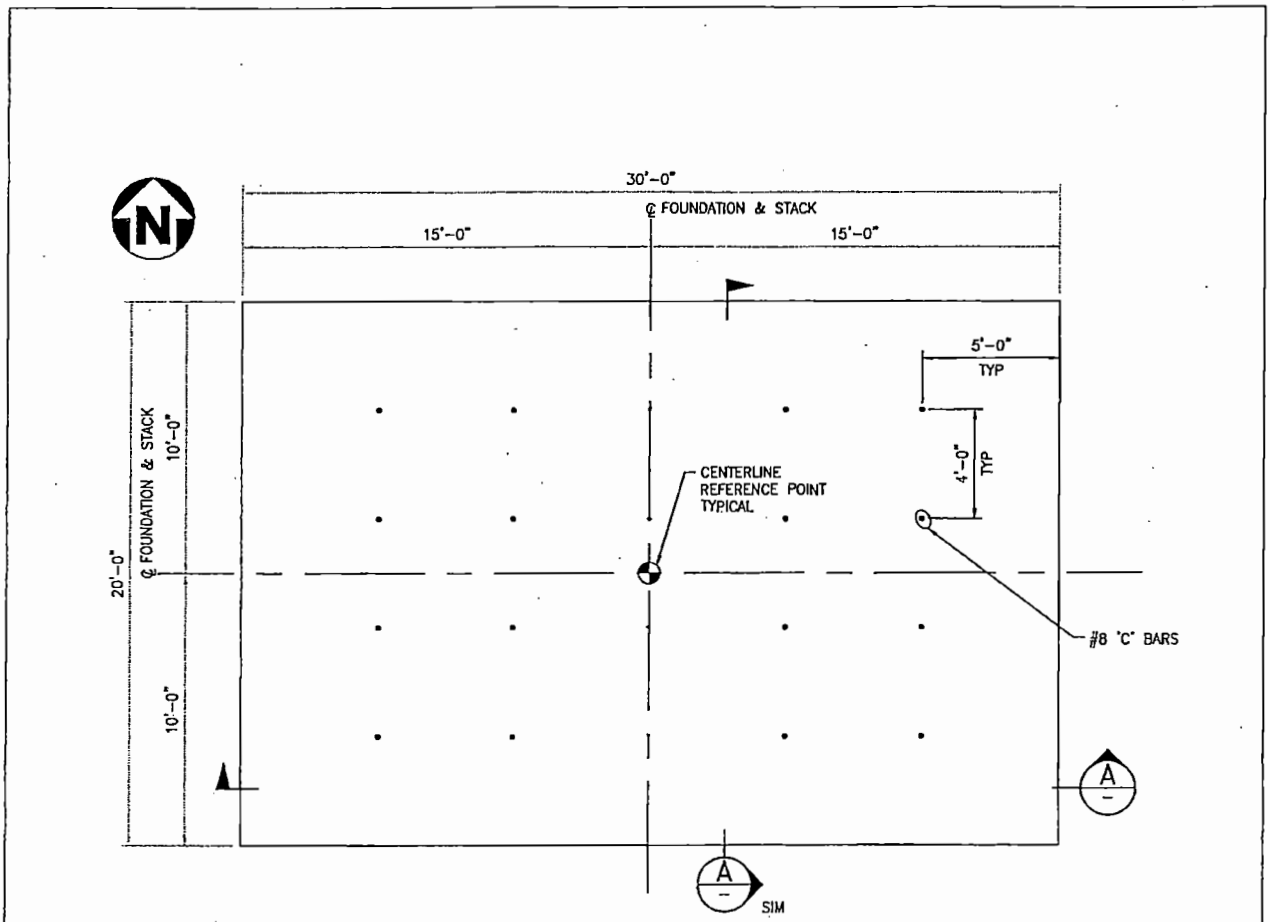

OFF-GAS STACK
FOUNDATION #10 – PLAN
1/4"=1'-0"

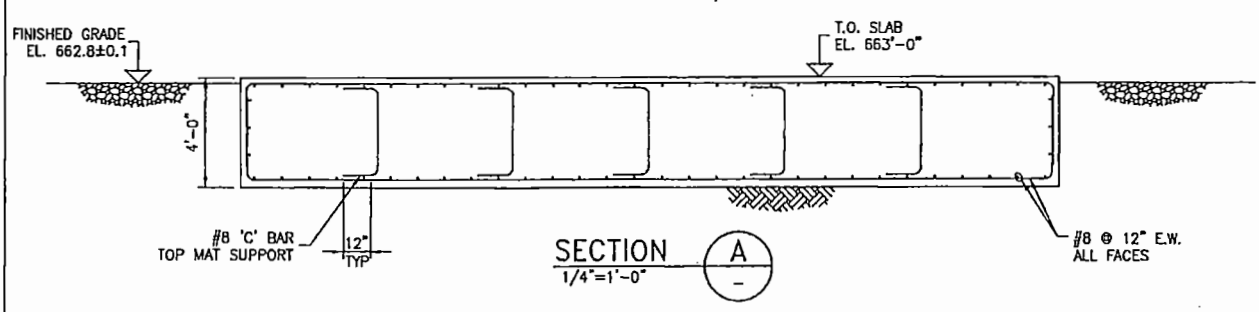

SECTION A
1/4"=1'-0"

M:\Demonstratio
mrc
D:\Fiscal Year 2006 Work\ECN\ECN 723832_Rev.0\ECN Sheet 4 WAS.dwg, 5/4/2006 2:23:37 PM,

CH2M HILL ENGINEERING CHANGE NOTICE CONTINUATION SHEET	1a. ECN 723832 R 0
AGE 5 OF 5	1b. Proj. ECN - - R

Document/Drawing No. H-14-106796 Sheet 1 Revision 0

"IS"

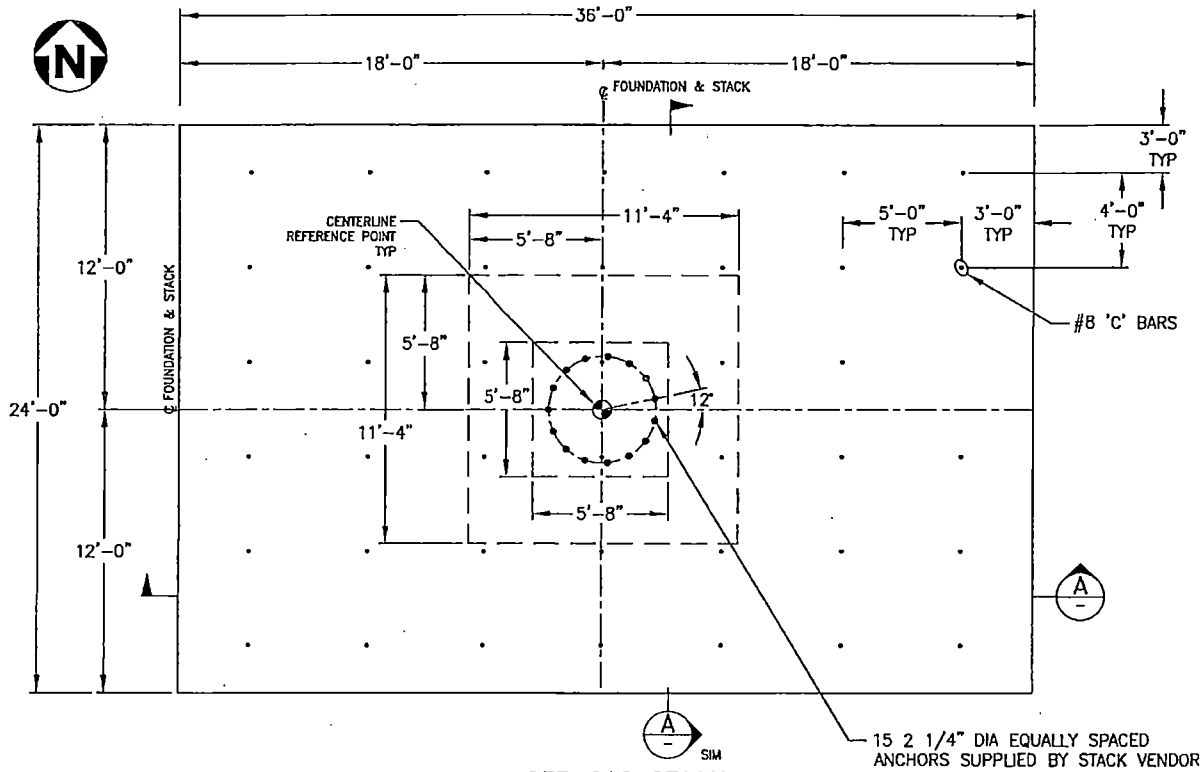

OFF-GAS STACK
FOUNDATION #10 - PLAN
1/4"=1'-0"

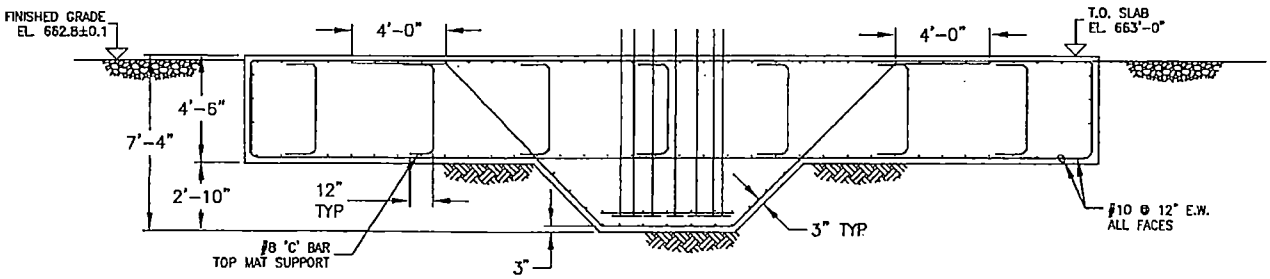

SECTION A
1/4"=1'-0"

Appendix D5

APPENDIX D5

MAIN OFF-GAS TREATMENT SYSTEM

Drawing Number	Revision	Title	Page
F-145579-00-A-0099	J	Bulk Vitrification P&ID "Typicals" Legend	D5-2
F-145579-00-A-0100	Q	Bulk Vitrification P&ID Symbol Legend	D5-3
F-145579-35-A-0100	P	Bulk Vitrification ICV Box P&ID	D5-4
F-145579-36-A-0099	M	Bulk Vitrification Off-Gas Dust Removal P&ID	D5-5
F-145579-36-A-0100	N	Bulk Vitrification Wet Scrubber Skid No. 1 P&ID	D5-6
F-145579-36-A-0102	P	Bulk Vitrification Off-Gas Trailer Scrubber Filter P&ID	D5-7
F-145579-36-A-0103	M	Bulk Vitrification Selective Catalytic Reduction P&ID	D5-8
F-145579-36-A-0105	N	Bulk Vitrification Stack Monitoring P&ID	D5-9
F-145579-36-A-0106	J	Bulk Vitrification Off-Gas Treatment Chilled Water Treatment	D5-10
F-145579-36-A-0107	H	Bulk Vitrification Off-Gas HEPA & HEGA Filter P&ID	D5-11
F-145579-36-A-0108	F	Bulk Vitrification OGTS Bypass P&ID	D5-12
F-145579-36-A-0109	C	Bulk Vitrification Duct Monitoring P&ID	D5-13

LIST OF ABBREVIATIONS FOR 'FLUID NOMENCLATURE' FINAL DBVS

AIR:
- AA AMBIENT AIR
- AC COMPRESSED AIR
- AI INSTRUMENT AIR

DRY SOLID:
- DBO BORON OXIDE
- DCS CLEAN SOIL
- DDW DRIED WASTE
- DGF GLASS FORMER
- DZO ZIRCONIUM OXIDE

GAS:
- GAM AMMONIA GAS

OIL/GREASE:
- ODF OIL–DIESEL FUEL
- OH OIL–HYDRAULICS

PROCESS SOLUTION:
- PDC DRYER CONDENSATE
- PLS LIQUID SIMULANT
- PLW LOW ACTIVITY WASTE
- PSS SCRUB SOLUTION
- PSW SECONDARY WASTE
- PTS TRI–MER SOLUTION

REAGENT:
- RAM AMMONIA LIQUID
- RAS SULPHURIC ACID
- RNH CAUSTIC (NaOH)
- RNP SODIUM PERCHLORATE (NaClO2)
- RNS SODIUM SULPHIDE

VACUUM, VAPOUR AND VENT LINES:
- VCS CLEAN SOIL VENT LINE
- VOG OFF GAS VENT LINE
- VVC VACUUM LINE
- VVP VAPOUR LINE

WATER/STEAM:
- STC STEAM CONDENSATE
- STM STEAM
- WBD BOILER BLOWDOWN WATER
- WBF BOILER FEEDWATER
- WC CHILLER WATER
- WED EQUIPMENT DRAIN
- WF FILTERED WATER
- WFI FIRE WATER
- WG GLYCOL
- WGL GLAND WATER
- WPO POTABLE WATER

NOTE:
1. THE FIRST LETTER IN THE LINE ABBREVIATION SHALL DESIGNATE THE FLUID CATEGORY, THE REMAINING LETTERS SHALL DESIGNATE THE FLUID.

TYPICAL #05
ISO TRAILER
SPACE HEATER

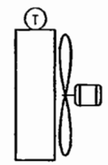

TYP. 05
YY–N11–XXX

TYPICAL #06
ISO TRAILER
AIR CONDITIONING

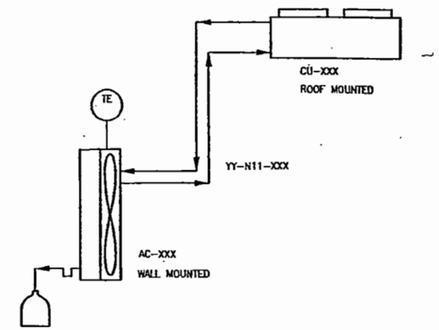

TYP. 06
YY–N11–XXX

In making requests for transmittal of data by any electronic media, the Company receiving such data agrees that AMEC Americas Limited cannot be held responsible for users of the data outside of or beyond the scope of our original agreement. Also, because data stored in electronic media or transmitted by electronic means can deteriorate undetected or be modified without the consultant's knowledge, the Company receiving data agrees that AMEC Americas Limited cannot be held liable for the compatibility, completeness or correctness of the data.

TYPICAL SYMBOL FOR LEGEND

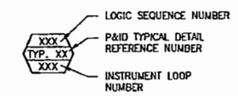

YY–ZZZ–XXX EQUIPMENT NUMBER (WHERE APPLICABLE)

Rev.	REVISION DESCRIPTION	Date	By	Ch'd	Approved Design Leader	Approved Prof. Eng.
J	REVISED PER DBVS–DCL–008	25 JAN 06	SNM	JL	N/A	N/A
I	ISSUED FOR REVISION & 50% REPORT	26 MAY 05	AA	BM	FWS	FS
H	ISSUED FOR REVISION & 90% REPORT	24 MAR 05	AA	PCF	KS/FS	TH
G	ISSUED FOR APPROVAL & 90% REPORT	20 JAN 05	AA	BM	FWS	TH
F	ISSUED FOR CH2M HILL REVIEW	09 DEC. 04	AA	BM	FWS	TH
E	ISSUED FOR GENERAL UPDATES & INFORMATION	03 NOV 04	AA	BM	FWS	TH
D	ISSUED FOR VENDOR INFORMATION	8 Oct 04	MV	CCH	FWS	JDS
C	ISSUED FOR APPROVAL	27 AUG 04	RDB	CCH	FWS	TH
B	INTERNAL ISSUED FOR INFORMATION DRAWING NUMBER REVISED, WAS F–143643–00–A–0099 tA	23 JUL 04	JSM	CCH	FWS	JDS
A	ISSUED FOR TASK 6 REPORT	7 APR 04	RDB	CCH	FWS	TH

AMEC DRAWING NO: F–145579–00–A–0099 REV: J

amec

AMEC PROJECT: 145579–FINAL DBVS DESIGN

U.S. DEPARTMENT OF ENERGY
Office of River Protection

BULK VITRIFICATION
P&ID
"TYPICALS" LEGEND

NAME	DATE	COMPANY
DRAWN BY		
DESIGNED BY		
CHECKED BY		
DESIGN / ENGINEERING		
DISCIPLINE MANAGER		
PROJECT MANAGER		
DESIGN AUTHORITY		

SIZE F | BLDG NO | SHEET NO | DWG NO | REV
SCALE | DSF | SHEET OF

DWG NO	TITLE
–	

DRAWING TRACEABILITY LIST

REF NUMBER	TITLE
–	

REFERENCES
NEXT USED ON

REV NO	REV DATE	DESCRIPTION	REV BY	CHECKED BY	CHK'D COMPANY
–					

REVISIONS

EQUIPMENT

- CENTRIFUGAL PUMP
- METERING PUMP
- DIAPHRAGM PUMP
- PORTABLE SUMP PUMP
- DUAL BASKET STRAINER
- EXHAUST FAN
- MIXER/DRYER
- CONDENSER
- STORAGE BIN
- SELECTIVE CATALYTIC REDUCTION BED
- MIST ELIMINATOR
- VACUUM PUMP
- AIR COMPRESSOR
- SEALED TANK
- VENTURI SCRUBBER
- CAMERA
- HEPA FILTER
- HEATER
- MOTOR
- FILTER
- HYDRAULIC OIL FILTER
- VACUUM FILTER
- DOUBLE WALL TANK
- QUENCHER/SPRAY TOWER

EQUIPMENT (CONT'D)

- VANE SEPARATOR
- ELECTRIC HOIST OR WINCH
- SINTERED METAL FILTER OR RECEIVER FILTER
- HYDRAULIC MOTOR
- HYDRAULIC PUMP
- LOAD CELL
- MIXER/AGITATOR
- CARTRIDGE FILTER
- COMPRESSED AIR BLOWER
- HEAT EXCHANGER
- AIR DRYER
- FLEX CHUTE
- VAPORIZER
- HEAT EXCHANGER/ VAPORIZER
- IMMERSION HEATER
- RADIATION SAMPLE COUPON

VALVE TYPES:

- GATE
- GLOBE
- CHECK
- BALL
- BUTTERFLY VALVE
- 3-WAY BALL
- PRESSURE REDUCING REGULATOR
- BACKPRESSURE REGULATOR
- CONTROL VALVE
- DISCRETE VALVE
- ANGLE VALVE (90°)
- PRESSURE RELIEF VALVE (PRV)
- INSTRUMENT PLUG VALVE

NOTATIONS:

NNF	NORMALLY NO FLOW
LO	LOCKED OPEN
LC	LOCKED CLOSED
AOV	AIR OPERATED VALVE
BB	BLOCK & BLEED
CA	COMPRESSED AIR
FC	FAIL CLOSED
FO	FAIL OPEN
FL	FAIL LAST
MOV	MOTOR OPERATED VALVE
NC	NORMALLY CLOSED
NO	NORMALLY OPEN
SOV	SOLENOID OPERATED VALVE
V	HAND VALVE
FW	FLUSH WATER
RCFD	REPLACEABLE CORE FILTER DRYER
THC	TOTAL HYDRO CARBONS
ORP	OXIDATION REDUCTION POTENTIAL ANALYZER

LINE TYPES:

- MAJOR PROCESS LINE
- MINOR PROCESS LINE
- CAPILLARY LINE
- AREA CROSS OVER LINE
- PNEUMATIC INSTRUMENT SIGNAL
- EXISTING DELETED
- ELECTRICAL POWER OR SIGNAL
- HEAT TRACED
- INSULATION
- DOUBLE CONTAINED
- 212° ELECTRIC HEAT TRACED OR INSULATED LINE @ TEMPERATURE
- PNEUMATIC CONVEYANCE BOOST LINES
- FP ELECTRIC HEAT TRACED (FREEZE PROTECTION, INSULATED)
- HIH HOSE IN HOSE CONTAINMENT LINE (HEAT TRACED, INSULATED)
- SKID BOUNDARY
- CONTROL (LOGIC) SIGNAL
- LINE INSULATED FOR PERSONNEL PROTECTION OR STD. INSULATION. SEE ISOMETRIC DRAWING FOR EXTENT OF INSULATION
- SHIELD WALL

ACTUATORS:

- S SOLENOID
- CYLINDER (DISCRETE)
- DIAPHRAGM (ANALOG)
- A AIR
- M MOTOR
- VFD VARIABLE FREQUENCY DRIVE

HVAC SYMBOLS

- AIR OPERATED DAMPER
- MANUAL OPERATED DAMPER
- M MOTOR OPERATED DAMPER
- BACKDRAFT DAMPER

MEASURING ELEMENTS:

- FG FLOW SIGHT GLASS
- LG LEVEL SIGHT GLASS
- FI FLOW INDICATOR (ROTAMETER)
- FIV FLOW INDICATOR VALVED (ROTAMETER WITH ATTACHED VALVE)
- TE TEMPERATURE ELEMENT (PENETRATION)
- TE TEMPERATURE ELEMENT (SURFACE MOUNT)
- FCV FLOW CONTROL VALVE
- FS FLOW SWITCH

- 4-WAY ANGLE
- 3-WAY ANGLE
- PRESSURE RELIEF (PRV)
- SPHERICAL DISK VALVE
- STAR/ROTARY
- NEEDLE VALVE
- TURBINE TYPE FLOW ELEMENT
- DIVERGENCE VALVE (BY-PASS)
- DVS DIVERGENCE VALVE (SINGLE)
- HAND KNIFE GATE
- EXTENTION HANDLE

MANUAL VALVE NOMENCLATURE

32-V-012
- SEQUENTIAL NUMBER
- PROCESS VALVE
- PROCESS AREA

32-V8-012B (USED IN "TYPICALS")
- SEQUENTIAL COMPONENT LOOP
- INSTRUMENT LOOP NUMBER
- INSTRUMENT BLOCK VALVE
- PROCESS AREA

LINE NOMENCLATURE

FOR FLUID DEFINITIONS SEE DWG F-145579-00-A-0099

4-STC-33-0152
- NOMINAL LINE SIZE (INCHES)
- FLUID ABBREVIATION
- AREA WHERE LINE ORIGINATES
- SEQUENTIAL NUMBER

MISCELLANEOUS SYMBOLS:

- X PROCESS STREAM LABEL
- FLANGED CONNECTION
- SPRAY NOZZLE
- TD THERMO DISPERSION FLOW METER
- ANNUBAR
- SAMPLE C/W BOTTLE
- VORTEX SHEDDING FLOW ELEMENT
- MT MOISTURE TRAP
- T STEAM TRAP
- TR-XXX LIQUID TRAP
- EXPANSION JOINT
- QUICK DISCONNECT
- M MAG FLOW METER ELEMENT
- QUICK DISCONNECT WITH INTERNAL CHECK
- C CORIOLIS MASS FLOW ELEMENT
- ALARM LIGHT
- LIGHT

- SLIDING JOINT
- TDV TRIPLE DUTY VALVE
- STRAINER
- REDUCER (SIZE DEFINED ON P&ID)
- DIAPHRAGM SEAL
- BACK FLOW PREVENTER C/W EQUIP. NO.
- FLEX HOSE
- RSE RADIATION SENSING ELEMENT
- ALARM HORN
- RUPTURE DISK (PRESSURE RELIEF)
- FLOW ORIFICE
- CARBOY OR CONTAINER
- CONTAINED – PIPE CONNECTION PORT
- PIPING OR EQUIPMENT BOUNDARY MARKERS
- IAS INSTRUMENT AIR SUPPLY
- BIRD SCREEN

INSTRUMENT IDENTIFICATION:

In making requests for transmittal of data by any electronic media, the Company receiving such data agrees that AMEC Americas Limited cannot be held responsible for users of the data outside of or beyond the scope of our original agreement. Also, because data stored in electronic media or transmitted by electronic means can deteriorate undetected or be modified without the consultant's knowledge, the Company receiving data agrees that AMEC Americas Limited cannot be held liable for the compatibility, completeness or correctness of the data.

- CURRENT MCS TEXT
- CASS XXXX — CASS OCTAL NUMBER
- ASSOCIATED EQUIPMENT NO. — XX XXX
  - INSTRUMENT ISA IDENTIFICATION
  - MCS SHARED CONTROL OR DISPLAY
- ASSOCIATED EQUIPMENT NO. — XX XXX
  - INSTRUMENT ISA IDENTIFICATION
  - PANEL MOUNTED INSTRUMENT
- ELECTRICAL OR CONTROL SIGNAL — XX XXX
  - LOCAL MOUNTED INSTRUMENT
  - INSTRUMENT ISA IDENTIFICATION
- ASSOCIATED EQUIPMENT NO. — ALPHA SUFFIX USED IN ASSOCIATED MELT SYSTEMS

"TYPICAL" IDENTIFICATION:

- XXX / TYP. XX / XXX — LOGIC SEQUENCE NUMBER; P&ID TYPICAL DETAIL REFERENCE NUMBER; INSTRUMENT LOOP NUMBER
- YY-ZZZ-XXX — EQUIPMENT NUMBER (WHERE APPLICABLE)
- K RELAY
- HARD WIRED INTERLOCK — INTERLOCK NUMBER
- SOFTWARE INTERLOCK — INTERLOCK NUMBER

- PRIMARY ELEMENT OR LOCALLY MOUNTED INSTRUMENT
- FRONT PANEL MOUNTED INSTRUMENT IN CONTROL ROOM
- INSTRUMENT MOUNTED ON BACK OF PANEL
- INSTRUMENT FRONT PANEL MOUNTED AT AN AUXILIARY LOCATION
- MONITOR AND CONTROL SYSTEM (MCS) LOCAL SHARED DISPLAY & CONTROL (VIDEO SCREEN)
- COMPUTER FUNCTION
- MONITOR AND CONTROL SYSTEM (MCS) SHARED DISPLAY (VIDEO SCREEN) THROUGH PLC IN CONTROL ROOM
- PROGRAMMABLE LOGIC CONTROLLER PRIMARY LOCATION
- PROGRAMMABLE LOGIC CONTROLLER FIELD MOUNTED
- CONVEYING FLUID / SHEET 2 / Z XX — DRAWING CONTINUATION ARROW USED ONLY FOR LINES ENTERING OR LEAVING THE FACE OF THE DRAWING; CONTINUATION DRAWING AND SHEET NUMBER; DWG ZONE LOCATION

ISA IDENTIFICATION LETTERS

	FIRST-LETTER		SUCCEEDING-LETTERS		
	MEASURED OR INITIATING VARIABLE	MODIFIER	READOUT OR PASSIVE FUNCTION	OUTPUT FUNCTION	MODIFIER
A	ANALYSIS		ALARM		
B	BURNER, COMBUSTION		USER'S CHOICE	USER'S CHOICE	USER'S CHOICE
C	CONDUCTIVITY	CONTROLLER		CONTROL	
D	DENSITY	DIFFERENTIAL/DETECTOR			
E	VOLTAGE		SENSOR (PRIMARY ELEMENT)		
F	FLOW RATE	RATIO (FRACTION)			
G	USER'S CHOICE		GLASS, VIEWING DEVICE		
H	HAND				HIGH
I	CURRENT (ELECTRICAL)		INDICATE		
J	POWER	SCAN			
K	TIME, TIME SCHEDULE	TIME RATE OF CHANGE		CONTROL STATION	
L	LEVEL		LIGHT		LOW
M	MOISTURE	MOMENTARY			MIDDLE, INTERMEDIATE
N	USER'S CHOICE		USER'S CHOICE	USER'S CHOICE	USER'S CHOICE
O	USER'S CHOICE		ORIFICE, RESTRICTION		
P	PRESSURE, VACUUM		POINT (TEST) CONNECTION		
Q	QUANTITY	INTEGRATE, TOTALIZE			
R	RADIATION		RECORD		
S	SPEED, FREQUENCY	SAFETY		SWITCH	SAMPLER
T	TEMPERATURE			TRANSMIT	
U	MULTIVARIABLE		MULTIFUNCTION	MULTIFUNCTION	MULTIFUNCTION
V	VIBRATION, MECHANICAL ANALYSIS			VALVE, DAMPER, LOUVER	
W	WEIGHT, FORCE		WELL		
X	MOTOR STARTER **	X AXIS	UNCLASSIFIED	UNCLASSIFIED	UNCLASSIFIED
Y	EVENT, STATE OR PRESENCE	Y AXIS		RELAY, COMPUTE, CONVERT	
Z	POSITION, DIMENSION	Z AXIS		DRIVER, ACTUATOR, UNCLASSIFIED	

** INCLUDES FIELD PUSH BUTTON STATION

EQUIPMENT NOMENCLATURE

32-D61-014
- EQUIPMENT NUMBER
- EQUIPMENT CODE
- PROCESS AREA

Rev.	REVISION DESCRIPTION	Date	By	Ch'd	Approved Supervisor	Approved Project Engr	REV
Q	REVISED PER DBVS-DCL-006	26 JAN 06	SNH	JL	N/A	N/A	
P	ADDED ADDITIONAL SYMBOLOGY PER ENGINEERING COMMENT	12-09-05	CBT	KJM	HA	HA	
N	ISSUED FOR REVISION & 90% REPORT	26 MAY 05	AA	BM	FWS	FS	
M	ISSUED FOR REVISION & 90% REPORT	22 APR 05	AA	BM	FWS	TH	
L	ISSUED FOR REVISION & 90% REPORT	01 APR 05	AA	BM	FWS	TH	

AMEC DRAWING NO. F-145579-00-A-0100 — REV Q

amec

AMEC PROJECT: 145579-FINAL DBVS DESIGN

U.S. DEPARTMENT OF ENERGY
Office of River Protection

BULK VITRIFICATION
P&ID
SYMBOL LEGEND

SIZE F — BLDG NO — PROCS NO — DWG NO — REV — SCALE — CODE — SHEET OF

DWG NO	TITLE
–	

DRAWING TRACEABILITY LIST

REF NUMBER	TITLE
–	

REFERENCES — NEXT USED ON

REVISIONS: REV NO. | DESCRIPTION | REV BY DATE | REV BY | CHECKED BY | CHKR

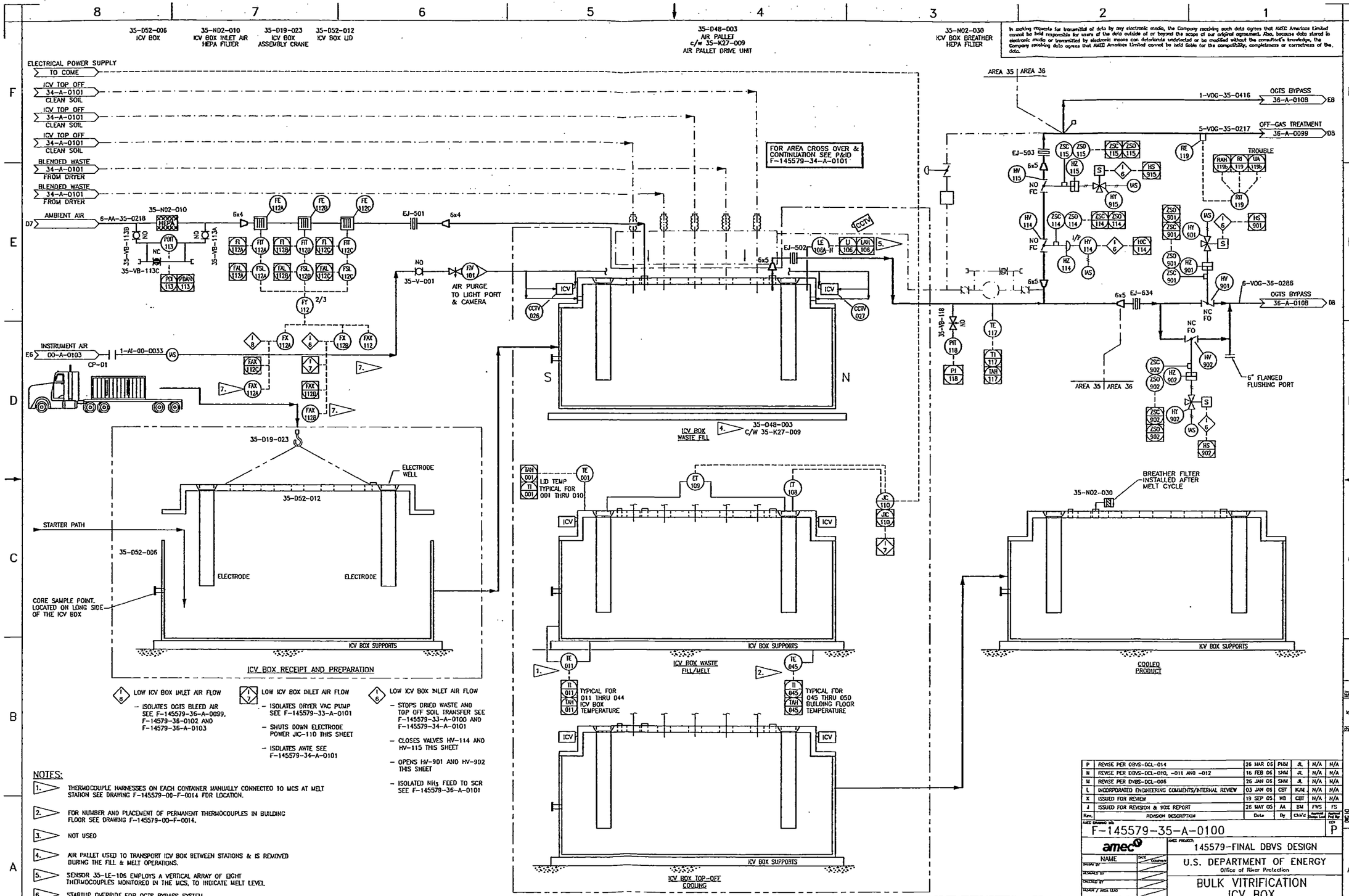
35-D52-006 ICV BOX
35-ND2-010 ICV BOX INLET AIR HEPA FILTER
35-D19-023 ICV BOX ASSEMBLY CRANE
35-D52-012 ICV BOX LID
35-D48-003 AIR PALLET c/w 35-K27-009 AIR PALLET DRIVE UNIT
35-N02-030 ICV BOX BREATHER HEPA FILTER
ELECTRICAL POWER SUPPLY
TO COME
ICV TOP OFF 34-A-0101 CLEAN SOIL
BLENDED WASTE 34-A-0101 FROM DRYER
AMBIENT AIR
INSTRUMENT AIR
FOR AREA CROSS OVER & CONTINUATION SEE P&ID F-145579-34-A-0101
AIR PURGE TO LIGHT PORT & CAMERA
ICV BOX WASTE FILL
ICV BOX WASTE FILL/MELT
ICV BOX TOP-OFF COOLING
COOLED PRODUCT
ICV BOX SUPPORTS
ICV BOX RECEIPT AND PREPARATION
STARTER PATH
ELECTRODE WELL
ELECTRODE
CORE SAMPLE POINT, LOCATED ON LONG SIDE OF THE ICV BOX
LID TEMP TYPICAL FOR 001 THRU 010
TYPICAL FOR 011 THRU 044 ICV BOX TEMPERATURE
TYPICAL FOR 045 THRU 050 BUILDING FLOOR TEMPERATURE
BREATHER FILTER INSTALLED AFTER MELT CYCLE
OGTS BYPASS 36-A-0108
OFF-GAS TREATMENT 36-A-0099
TROUBLE
6" FLANGED FLUSHING PORT
AREA 35 | AREA 36
LOW ICV BOX INLET AIR FLOW
- ISOLATES OGTS BLEED AIR SEE F-145579-36-A-0099, F-14579-36-0102 AND F-14579-36-A-0103
LOW ICV BOX INLET AIR FLOW
- ISOLATES DRYER VAC PUMP SEE F-145579-33-A-0101
- SHUTS DOWN ELECTRODE POWER JIC-110 THIS SHEET
- ISOLATES AWTE SEE F-145579-34-A-0101
LOW ICV BOX INLET AIR FLOW
- STOPS DRIED WASTE AND TOP OFF SOIL TRANSFER SEE F-145579-33-A-0100 AND F-145579-34-A-0101
- CLOSES VALVES HV-114 AND HV-115 THIS SHEET
- OPENS HV-901 AND HV-902 THIS SHEET
- ISOLATED NH3 FEED TO SCR SEE F-145579-36-A-0101
NOTES:
1. THERMOCOUPLE HARNESSES ON EACH CONTAINER MANUALLY CONNECTED TO MCS AT MELT STATION SEE DRAWING F-145579-00-F-0014 FOR LOCATION.
2. FOR NUMBER AND PLACEMENT OF PERMANENT THERMOCOUPLES IN BUILDING FLOOR SEE DRAWING F-145579-00-F-0014.
3. NOT USED
4. AIR PALLET USED TO TRANSPORT ICV BOX BETWEEN STATIONS & IS REMOVED DURING THE FILL & MELT OPERATIONS.
5. SENSOR 35-LE-106 EMPLOYS A VERTICAL ARRAY OF EIGHT THERMOCOUPLES MONITORED IN THE MCS, TO INDICATE MELT LEVEL.
6. STARTUP OVERRIDE FOR OGTS BYPASS SYSTEM.
7. ALARM LOCATED ON SAFETY ANNUNCIATOR IN CONTROL ROOM.
P REVISE PER DBVS-DCL-014 26 MAR 05
N REVISE PER DBVS-DCL-010, -011 AND -012 16 FEB 05
M REVISE PER DVBS-DCL-006 26 JAN 05
L INCORPORATED ENGINEERING COMMENTS/INTERNAL REVIEW 03 JAN 05
K ISSUED FOR REVIEW 19 SEP 05
J ISSUED FOR REVISION & 90% REPORT 26 MAY 05
F-145579-35-A-0100
145579-FINAL DBVS DESIGN
U.S. DEPARTMENT OF ENERGY
Office of River Protection
BULK VITRIFICATION ICV BOX P&ID
DRAWING TRACEABILITY LIST
REVISIONS

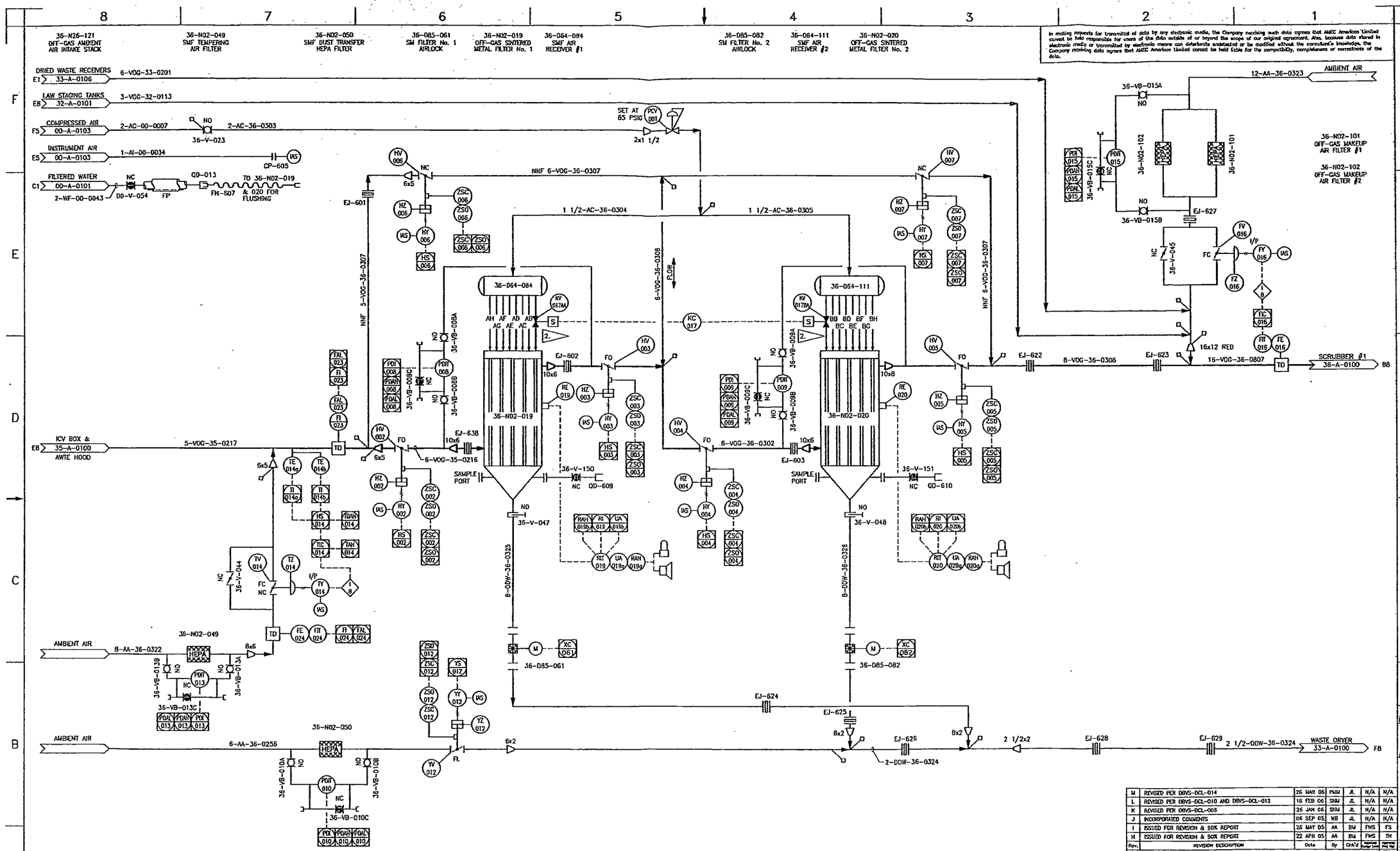

NOTES:

1. NOT USED.

2. INSTRUMENTS KV-017AA TO AH & BA TO BH ARE SOLENOID VALVES THAT ARE TO BE TAGGED AA, AB, AC, etc.

CLOSE VALVES ON LOW ICV BOX INLET AIR FLOW SEE F-145579-35-A-0100.

Rev.	REVISION DESCRIPTION	Date	By	Ch'k'd	Approved Design Leader	Approved Proj. Eng.
M	REVISED PER DBVS-DCL-014	26 MAR 06	PMM	JL	N/A	N/A
L	REVISED PER DBVS-DCL-010 AND DBVS-DCL-012	16 FEB 06	SNM	JL	N/A	N/A
K	REVISED PER DBVS-DCL-005	26 JAN 06	SNM	JL	N/A	N/A
J	INCORPORATED COMMENTS	06 SEP 05	WB	JL	N/A	N/A
I	ISSUED FOR REVISION & 90% REPORT	26 MAY 05	AA	BM	FWS	FS
H	ISSUED FOR REVISION & 90% REPORT	22 APR 05	AA	BM	FWS	TH

AMEC DRAWING NO: F-145579-36-A-0099 REV: M

amec

AMEC PROJECT: 145579-FINAL DBVS DESIGN

U.S. DEPARTMENT OF ENERGY
Office of River Protection

BULK VITRIFICATION
OFF-GAS DUST
REMOVAL P&ID

NAME	DATE	COMPANY
DRAWN BY		
DESIGNED BY		
CHECKED BY		
DESIGN / DISC LEAD		
ENGINEERING MANAGER		
PROJECT MANAGER		
DESIGN AUTHORITY		

SIZE F | BLOCK NO | SHEET NO | DWG NO | REV | SCALE | CDF | SHEET OF

DWG NO	TITLE	REF NUMBER	TITLE
DRAWING TRACEABILITY LIST		REFERENCES	
		NEXT USED ON	

REV NO	REV DATE	DESCRIPTION	REV BY DATE	REV IT	CHECKED BY	CHCK COMPANY
REVISIONS						

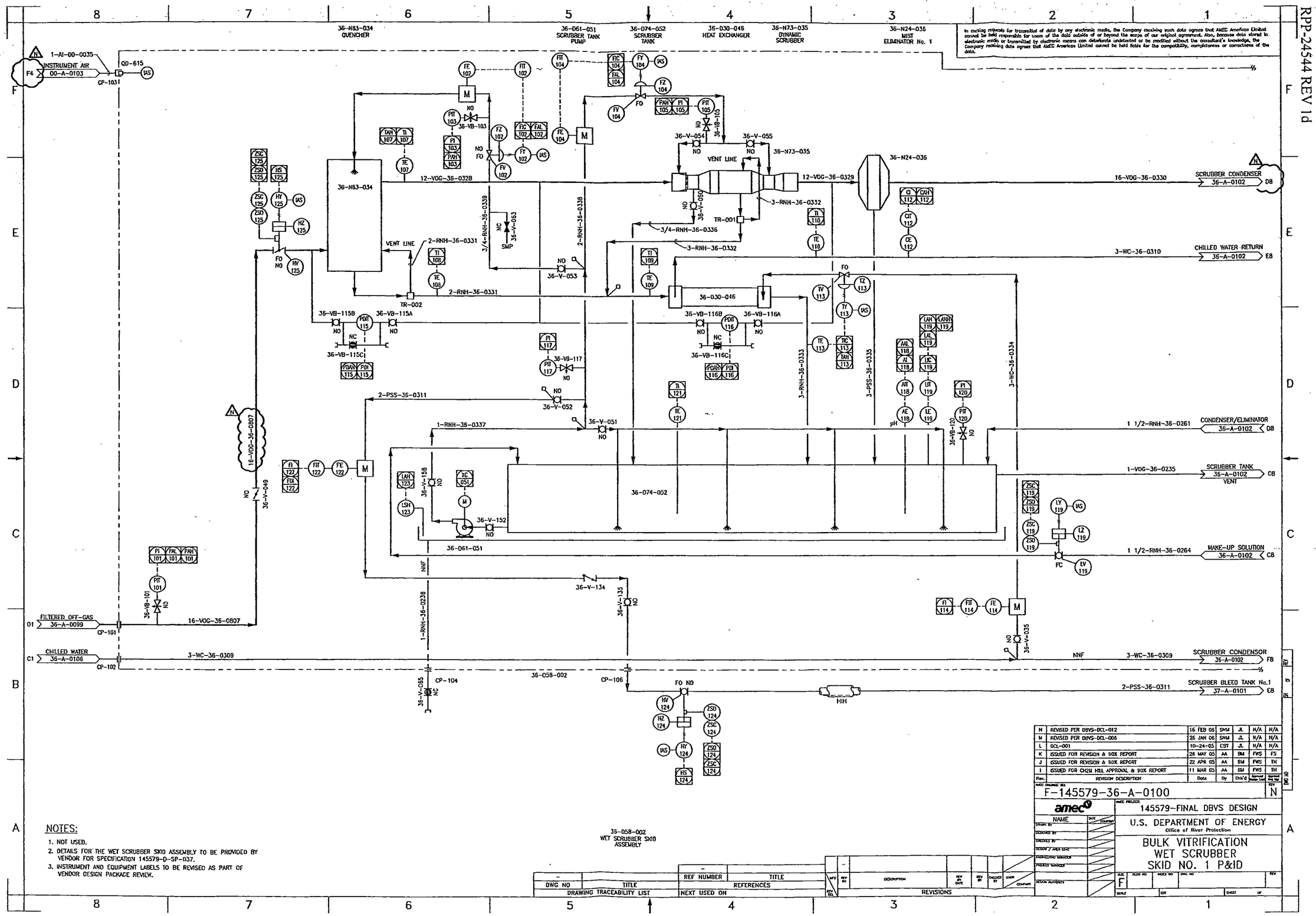
36-N83-034 QUENCHER
36-D61-051 SCRUBBER TANK PUMP
36-D74-052 SCRUBBER TANK
36-D30-046 HEAT EXCHANGER
36-N73-035 DYNAMIC SCRUBBER
36-N24-036 MIST ELIMINATOR No. 1
1-AI-00-0035
INSTRUMENT AIR
00-A-0103
CP-1031
00-615
12-VOG-36-0328
12-VOG-36-0329
16-VOG-36-0330
SCRUBBER CONDENSER 36-A-0102
3-WC-36-0310
CHILLED WATER RETURN 36-A-0102
VENT LINE
2-RNH-36-0331
3/4-RNH-36-0339
3/4-RNH-36-0336
3-RNH-36-0332
2-RNH-36-0338
2-PSS-36-0311
1-RNH-36-0337
1 1/2-RNH-36-0261
CONDENSER/ELIMINATOR 36-A-0102
1-VOG-36-0235
SCRUBBER TANK 36-A-0102 VENT
1 1/2-RNH-36-0264
MAKE-UP SOLUTION 36-A-0102
16-VOG-36-0807
FILTERED OFF-GAS 36-A-0099
CP-101
CHILLED WATER 36-A-0106
CP-102
3-WC-36-0309
SCRUBBER CONDENSOR 36-A-0102
36-058-002
CP-104
CP-106
2-PSS-36-0311
SCRUBBER BLEED TANK No.1 37-A-0101
HIH
36-074-052
36-061-051
36-V-054
36-V-055
36-V-053
36-V-052
36-V-051
36-V-152
36-V-134
36-V-135
36-V-049
36-V-035
36-VB-115B
36-VB-115A
36-VB-115C
36-VB-116B
36-VB-116A
36-VB-116C
36-VB-117
36-VB-101
36-VB-120
36-VB-103
36-VB-105
TR-001
TR-002
3-RNH-36-0333
3-PSS-36-0335
3-WC-36-0334
NNF
SMP
NOTES:
1. NOT USED.
2. DETAILS FOR THE WET SCRUBBER SKID ASSEMBLY TO BE PROVIDED BY VENDOR FOR SPECIFICATION 145579-D-SP-037.
3. INSTRUMENT AND EQUIPMENT LABELS TO BE REVISED AS PART OF VENDOR DESIGN PACKAGE REVIEW.
35-058-002 WET SCRUBBER SKID ASSEMBLY
DRAWING TRACEABILITY LIST
DWG NO
TITLE
REFERENCES
REF NUMBER
NEXT USED ON
REVISIONS
N REVISED PER DBVS-DCL-012 16 FEB 06 SMM JL N/A N/A
M REVISED PER DBVS-DCL-006 26 JAN 06 SMM JL N/A N/A
L DCL-001 10-24-05 CST JL N/A N/A
K ISSUED FOR REVISION & 90% REPORT 26 MAY 05 AA BM FWS FS
J ISSUED FOR REVISION & 90% REPORT 22 APR 05 AA BM FWS TH
I ISSUED FOR CH2M HILL APPROVAL & 90% REPORT 11 MAR 05 AA BM FWS TH
F-145579-36-A-0100
N
amec
145579-FINAL DBVS DESIGN
U.S. DEPARTMENT OF ENERGY
Office of River Protection
BULK VITRIFICATION
WET SCRUBBER
SKID NO. 1 P&ID
F

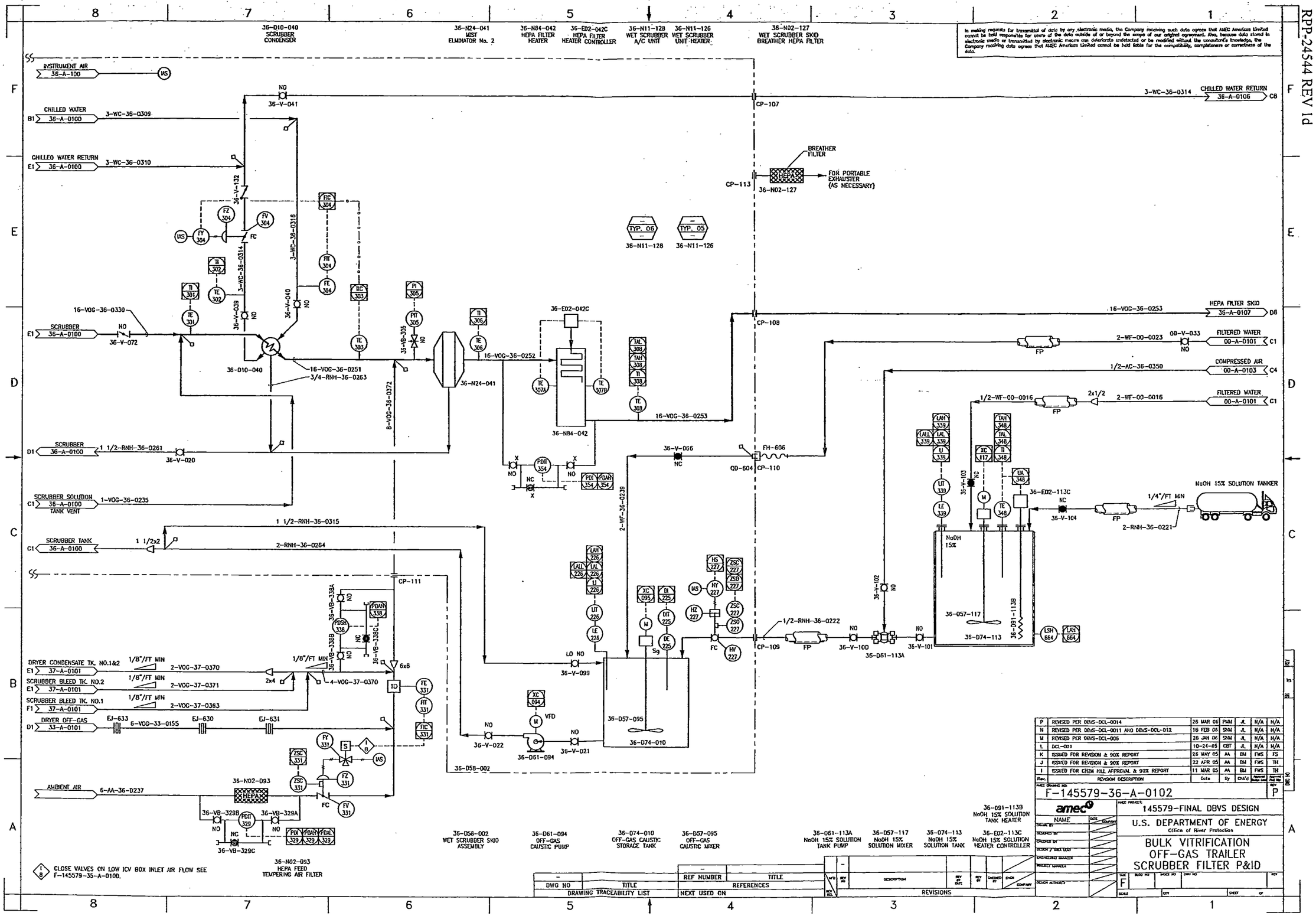
36-D10-040 SCRUBBER CONDENSER
36-N24-041 MIST ELIMINATOR No. 2
36-N84-042 HEPA FILTER HEATER
36-E02-042C HEPA FILTER HEATER CONTROLLER
36-N11-128 WET SCRUBBER A/C UNIT
36-N11-126 WET SCRUBBER UNIT HEATER
36-N02-127 WET SCRUBBER SKID BREATHER HEPA FILTER
INSTRUMENT AIR 36-A-100
CHILLED WATER 36-A-0100
3-WC-36-0309
CHILLED WATER RETURN 36-A-0100
3-WC-36-0310
3-WC-36-0314
CHILLED WATER RETURN 36-A-0106
BREATHER FILTER
FOR PORTABLE EXHAUSTER (AS NECESSARY)
SCRUBBER 36-A-0100
16-VOG-36-0330
36-V-072
36-V-041
36-V-132
36-V-039
36-V-040
36-V-035
36-D10-040
16-VOG-36-0251
3/4-RNH-36-0263
8-VOG-36-0372
16-VOG-36-0252
36-N24-041
36-E02-042C
36-N84-042
16-VOG-36-0253
CP-107
CP-108
CP-113
16-VOG-36-0253
HEPA FILTER SKID 36-A-0107
2-WF-00-0023
00-V-033
FILTERED WATER 00-A-0101
1/2-AC-36-0350
COMPRESSED AIR 00-A-0103
1/2-WF-00-0016
2-WF-00-0016
FILTERED WATER 00-A-0101
SCRUBBER 36-A-0100
1 1/2-RNH-36-0261
36-V-020
SCRUBBER SOLUTION TANK VENT 36-A-0100
1-VOG-36-0235
1 1/2-RNH-36-0315
SCRUBBER TANK 36-A-0100
2-RNH-36-0264
36-V-066
FH-606
QD-604
CP-110
2-WF-36-0239
36-V-102
36-V-103
36-E02-113C
36-V-104
2-RNH-36-0221
1/4"/FT MIN
NaOH 15% SOLUTION TANKER
NaOH 15%
36-D57-117
36-D74-113
36-D91-113B
1/2-RNH-36-0222
CP-109
36-V-100
36-V-101
36-D61-113A
36-V-099
36-D57-095
36-D74-010
36-V-022
36-V-021
36-D61-094
36-D58-002
DRYER CONDENSATE TK. NO.1&2 37-A-0101
SCRUBBER BLEED TK. NO.2 37-A-0101
SCRUBBER BLEED TK. NO.1 37-A-0101
1/8"/FT MIN
2-VOG-37-0370
2-VOG-37-0371
2-VOG-37-0363
4-VOG-37-0370
DRYER OFF-GAS 33-A-0101
EJ-633
6-VOG-33-0155
EJ-630
EJ-631
AMBIENT AIR
6-AA-36-0237
36-N02-093
36-VB-329B
36-VB-329A
36-VB-329C
36-VB-338A
36-VB-338B
36-VB-338C
CLOSE VALVES ON LOW ICV BOX INLET AIR FLOW SEE F-145579-35-A-0100.
36-N02-093 HEPA FEED TEMPERING AIR FILTER
36-D58-002 WET SCRUBBER SKID ASSEMBLY
36-D61-094 OFF-GAS CAUSTIC PUMP
36-D74-010 OFF-GAS CAUSTIC STORAGE TANK
36-D57-095 OFF-GAS CAUSTIC MIXER
36-D61-113A NaOH 15% SOLUTION TANK PUMP
36-D57-117 NaOH 15% SOLUTION MIXER
36-D74-113 NaOH 15% SOLUTION TANK
36-D91-113B NaOH 15% SOLUTION TANK HEATER
36-E02-113C NaOH 15% SOLUTION HEATER CONTROLLER
DRAWING TRACEABILITY LIST
REF NUMBER
TITLE
DWG NO
REFERENCES
NEXT USED ON
REVISIONS
P REMIED PER DBVS-DCL-0014 26 MAR 06 PMM JL N/A N/A
N REVISED PER DBVS-DCL-0011 AND DBVS-DCL-012 16 FEB 06 SMM JL N/A N/A
M REVISED PER DBVS-DCL-006 26 JAN 06 SMM JL N/A N/A
L DCL-001 10-24-05 CBT JL N/A N/A
K ISSUED FOR REVISION & 90% REPORT 26 MAY 05 AA BM FWS FS
J ISSUED FOR REVISION & 90% REPORT 22 APR 05 AA BM FWS TH
I ISSUED FOR CH2M HILL APPROVAL & 90% REPORT 11 MAR 05 AA BM FWS TH
F-145579-36-A-0102
amec
145579-FINAL DBVS DESIGN
U.S. DEPARTMENT OF ENERGY
Office of River Protection
BULK VITRIFICATION
OFF-GAS TRAILER
SCRUBBER FILTER P&ID

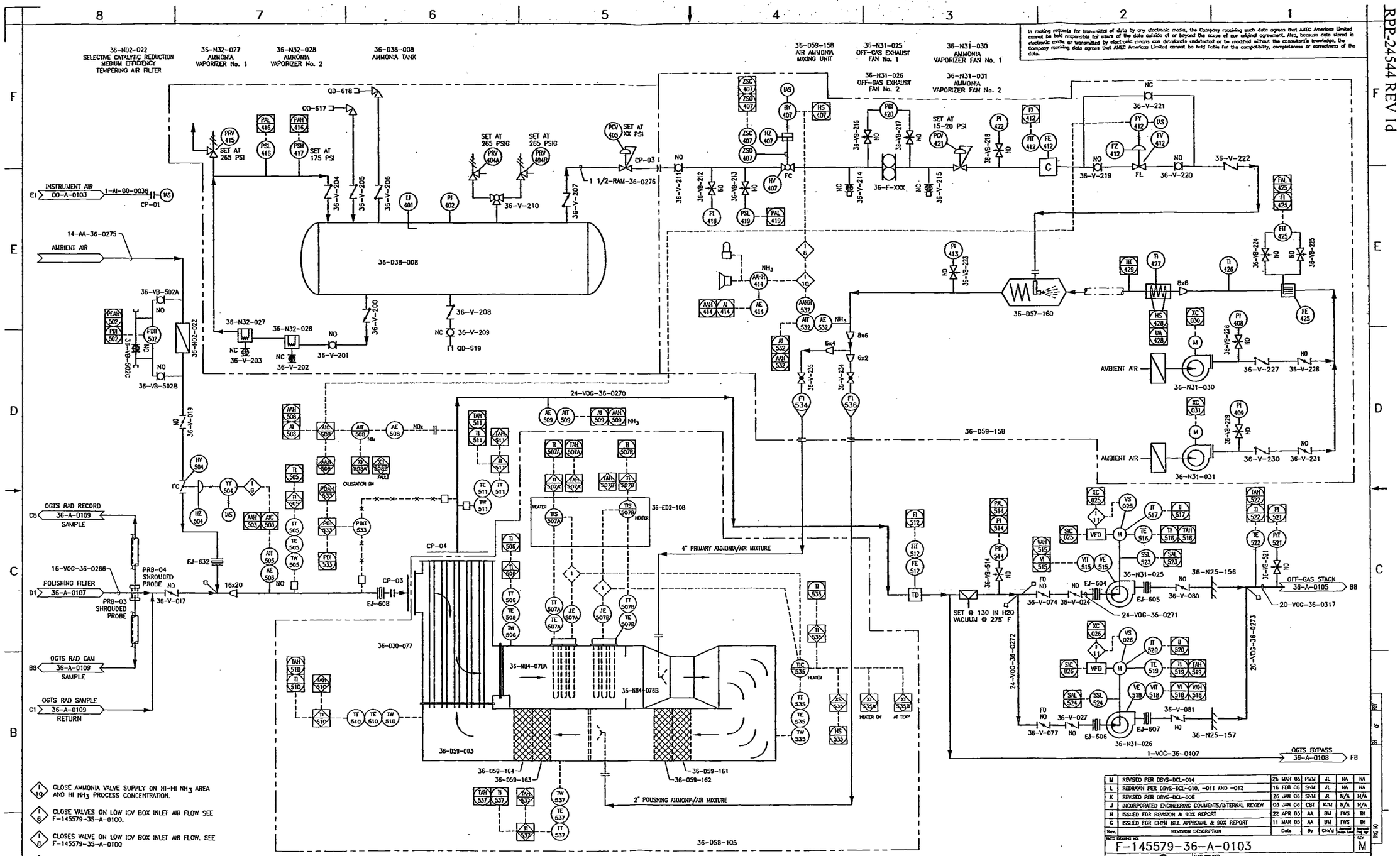
36-N02-022
SELECTIVE CATALYTIC REDUCTION
MEDIUM EFFICIENCY
TEMPERING AIR FILTER
36-N32-027
AMMONIA
VAPORIZER No. 1
36-N32-028
AMMONIA
VAPORIZER No. 2
36-D38-008
AMMONIA TANK
36-059-158
AIR AMMONIA
MIXING UNIT
36-N31-025
OFF-GAS EXHAUST
FAN No. 1
36-N31-026
OFF-GAS EXHAUST
FAN No. 2
36-N31-030
AMMONIA
VAPORIZER FAN No. 1
36-N31-031
AMMONIA
VAPORIZER FAN No. 2
INSTRUMENT AIR
DO-A-0103
1-AI-00-0036
CP-01
14-AA-36-0275
AMBIENT AIR
36-D38-008
36-V-203
36-V-202
36-V-201
36-V-208
36-V-209
QD-619
36-V-221
36-V-219
36-V-220
36-V-222
36-F-XXX
36-D57-160
36-N31-030
36-N31-031
36-V-227
36-V-228
36-V-230
36-V-231
36-D59-158
24-VOG-36-0270
36-E02-108
4" PRIMARY AMMONIA/AIR MIXTURE
36-N84-078A
36-N84-078B
36-D30-077
36-D59-003
36-D59-164
36-D59-163
36-D59-161
36-D59-162
2" POUSHING AMMONIA/AIR MIXTURE
36-D58-105
36-N31-025
36-N31-026
36-N25-156
36-N25-157
36-V-074
36-V-024
36-V-080
36-V-077
36-V-081
24-VOG-36-0271
24-VOG-36-0272
20-VOG-36-0273
20-VOG-36-0317
OFF-GAS STACK
36-A-0105
OGTS BYPASS
36-A-0108
1-VOG-36-0407
SET @ 130 IN H2O
VACUUM @ 275° F
OGTS RAD RECORD
36-A-0109
SAMPLE
16-VOG-36-0266
POUSHING FILTER
36-A-0107
PRB-03
SHROUDED
PROBE
PRB-04
SHROUDED
PROBE
36-V-017
EJ-632
EJ-608
CP-03
CP-04
OGTS RAD CAM
36-A-0109
SAMPLE
OGTS RAD SAMPLE
36-A-0109
RETURN
36-N02-022
36-VB-502A
36-VB-502B
36-V-019
36-N32-027
36-N32-028
SET AT 265 PSIG
SET AT 175 PSI
SET AT XX PSI
SET AT 15-20 PSI
1 1/2-RAM-36-0276
CLOSE AMMONIA VALVE SUPPLY ON HI-HI NH3 AREA AND HI NH3 PROCESS CONCENTRATION.
CLOSE VALVES ON LOW ICV BOX INLET AIR FLOW SEE F-145579-35-A-0100.
CLOSES VALVE ON LOW ICV BOX INLET AIR FLOW. SEE F-145579-35-A-0100
SHUTS DOWN RESPECTIVE FAN ON HIGH VIBRATION.
NOTES:
1. NOT USED.
2. DETAILS INSIDE SCR SKID BOUNDARY TO BE CONFIRMED ON RECEIPT OF VENDOR INFORMATION. THIS WILL ALSO AFFECT PCV-005.
36-D30-077
SELECTIVE CATALYTIC REDUCTION
HEAT EXCHANGER
36-E02-108
SELECTIVE CATALYTIC
REDUCTION HEATER CONTROLLER
36-N84-078A
SELECTIVE CATALYTIC
REDUCTION HEATER
36-N84-078B
SELECTIVE CATALYTIC
REDUCTION HEATER
36-D59-003
SELECTIVE CATALYTIC
REDUCTION UNIT
36-D59-164
NH3 CATALYTIC BED
36-D58-105
SELECTIVE CATALYTIC
REDUCTION SKID
36-D59-163
2ND NOx CATALYTIC BED
36-D59-161
1ST NOx CATALYTIC BED
36-D59-162
COx CATALYTIC BED
36-D57-160
AMMONIA ATOMIZER
36-N25-156
BACKDRAFT DAMPER
FAN NO. 1
36-N25-157
BACKDRAFT DAMPER
FAN NO. 2
DRAWING TRACEABILITY LIST
DWG NO
TITLE
REF NUMBER
TITLE
REFERENCES
NEXT USED ON
REVISIONS
DESCRIPTION
M REVISED PER DBVS-DCL-014 26 MAR 05 PMM JL NA NA
L REDRAWN PER DBVS-DCL-010, -011 AND -012 16 FEB 05 SNM JL NA NA
K REVISED PER DBVS-DCL-006 26 JAN 05 SNM JL N/A N/A
J INCORPORATED ENGINEERING COMMENTS/INTERNAL REVIEW 03 JAN 05 CBT KJM N/A N/A
H ISSUED FOR REVISION & 90% REPORT 22 APR 05 AA BM FMS TH
G ISSUED FOR CH2M HILL APPROVAL & 80% REPORT 11 MAR 05 AA BM FMS TH
Rev. REVISION DESCRIPTION Date By Ch'k'd
AMEC DRAWING NO
F-145579-36-A-0103
REV
M
amec
145579-FINAL DBVS DESIGN
U.S. DEPARTMENT OF ENERGY
Office of River Protection
BULK VITRIFICATION
SELECTIVE CATALYTIC
REDUCTION P&ID
NAME
DATE
COMPANY
DRAWN BY
DESIGNED BY
CHECKED BY
DESIGN / AREA LEAD
ENGINEERING MANAGER
PROJECT MANAGER
CLIENT AUTHORITY
SIZE
F
BLDG NO
SHEET NO
DWG NO
REV
SCALE
SHEET OF

In making requests for transmittal of data by any electronic media, the Company receiving such data agrees that AMEC Americas Limited cannot be held responsible for uses of the data outside of or beyond the scope of our original agreement. Also, because data stored in electronic media or transmitted by electronic means can deteriorate undetected or be modified without the consultant's knowledge, the Company receiving data agrees that AMEC Americas Limited cannot be held liable for the compatibility, completeness or correctness of the data.

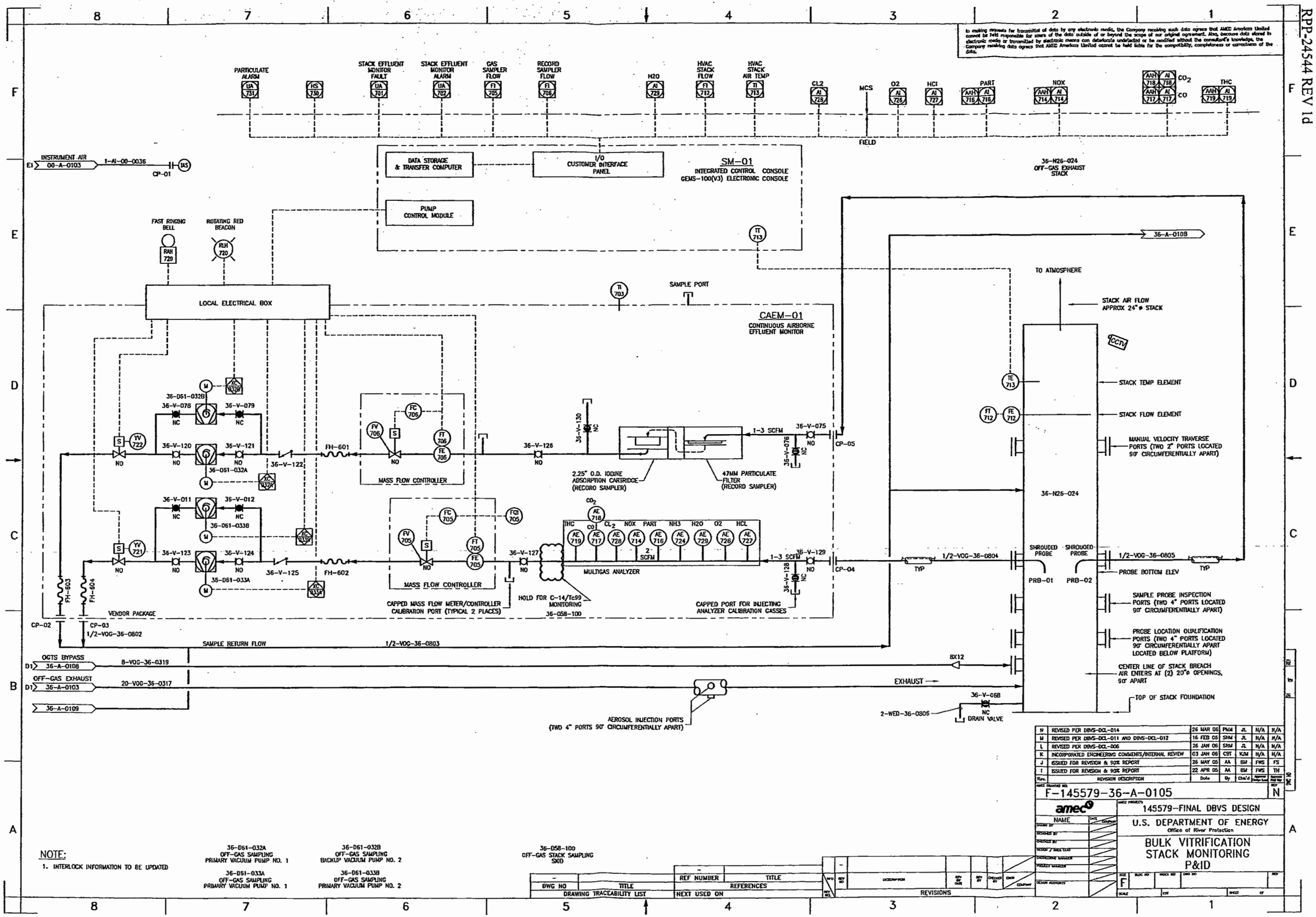

Rev.	REVISION DESCRIPTION	Date	By	Chk'd	Approved Project Eng.	Approved Proj. Mgr.
N	REVISED PER DBVS-DCL-014	26 MAR 06	PMM	JL	N/A	N/A
M	REVISED PER DBVS-DCL-011 AND DBVS-DCL-012	16 FEB 06	SHM	JL	N/A	N/A
L	REVISED PER DBVS-DCL-006	26 JAN 06	SHM	JL	N/A	N/A
K	INCORPORATED ENGINEERING COMMENTS/INTERNAL REVIEW	03 JAN 06	CBT	KJM	N/A	N/A
J	ISSUED FOR REVISION & 90% REPORT	26 MAY 05	AA	BM	FWS	FS
I	ISSUED FOR REVISION & 90% REPORT	22 APR 05	AA	BM	FWS	TH

AMEC DRAWING NO. F-145579-36-A-0105 REV N

amec

AMEC PROJECT: 145579-FINAL DBVS DESIGN

U.S. DEPARTMENT OF ENERGY
Office of River Protection

BULK VITRIFICATION STACK MONITORING P&ID

NAME | DATE | SIGNATURE
DRAWN BY
DESIGNED BY
CHECKED BY
DESIGN / CHECK LEAD
ENGINEERING MANAGER
PROJECT MANAGER
DESIGN AUTHORITY

SIZE F | BLDG NO | INDEX NO | DWG NO | REV | SCALE | CDF | SHEET OF

NOTE:
1. INTERLOCK INFORMATION TO BE UPDATED

36-D61-032A OFF-GAS SAMPLING PRIMARY VACUUM PUMP NO. 1
36-D61-033A OFF-GAS SAMPLING PRIMARY VACUUM PUMP NO. 1
36-D61-032B OFF-GAS SAMPLING BACKUP VACUUM PUMP NO. 2
36-D61-033B OFF-GAS SAMPLING PRIMARY VACUUM PUMP NO. 2
36-D58-100 OFF-GAS STACK SAMPLING SKID

DRAWING TRACEABILITY LIST

DWG NO	TITLE
–	

REFERENCES

REF NUMBER	TITLE	NEXT USED ON
–		

REVISIONS

INFO REL	REV NO	DESCRIPTION	REV BY DATE	REV BY	CHECKED BY	ENGR COMPANY
	–					

In making requests for transmittal of data by any electronic media, the Company receiving such data agrees that AMEC Americas Limited cannot be held responsible for users of the data outside of or beyond the scope of our original agreement. Also, because data stored in electronic media or transmitted by electronic means can deteriorate undetected or be modified without the consultant's knowledge, the Company receiving data agrees that AMEC Americas Limited cannot be held liable for the compatibility, completeness or correctness of the data.

36-E42-099 OFF-GAS CHILLER ECONOMIZER | 36-D10-103 OFF-GAS CHILLER CONDENSER | 36-D58-056 OFF-GAS CHILLER SKID | 36-D65-085 OFF-GAS CHILLER COMPRESSOR | 36-D30-086 OFF-GAS CHILLER EVAPORATOR | 36-D34-104 OFF-GAS CHILLER OIL SEPARATOR

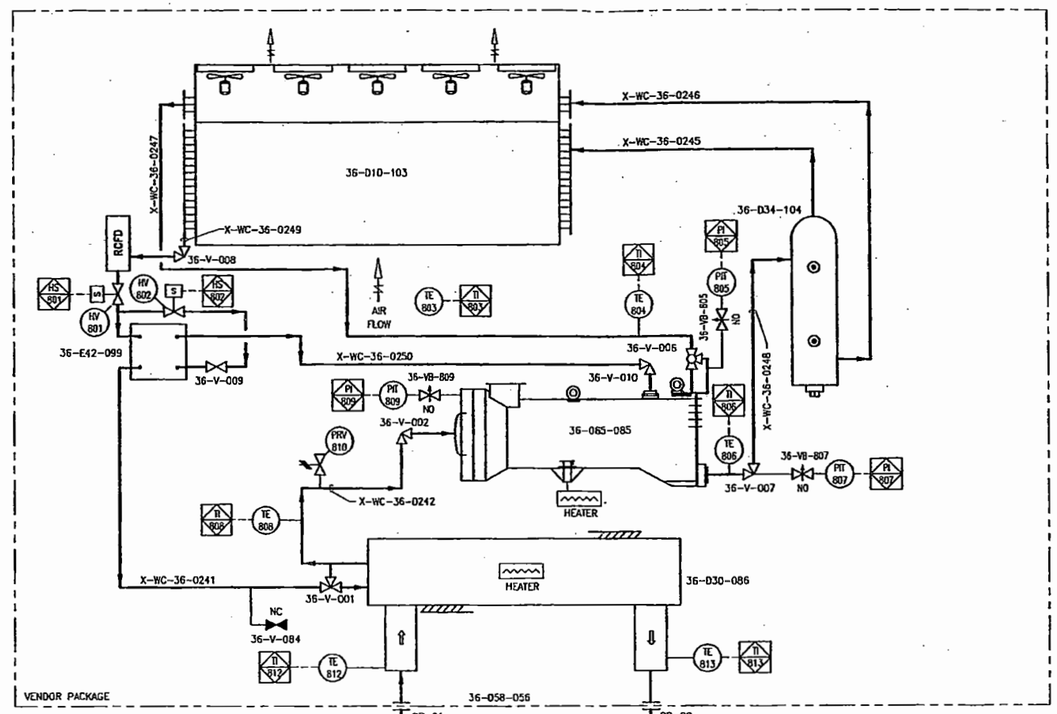

FILTERED WATER C1 00-A-0101 — 2-WF-00-0018 — 00-V-022 NC — FP — QD-612 — HOSE STATION FH-605

CHILLED WATER RETURN F1 36-A-0102 — 3-WC-36-0314 — FH-608 — CP-05 — 36-V-085 NO

CHILLED WATER MAKE-UP QD-601 — CP-04 — 2-WC-36-0321

36-V-034 NO — FH-610 — 3-WC-36-0309 — OFF-GAS SCRUBBERS 36-A-0100 B8

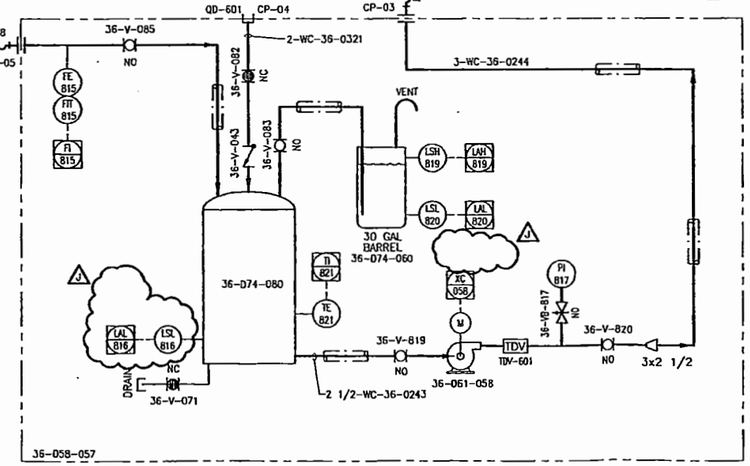

Rev.	REVISION DESCRIPTION	Date	By	Chk'd	Approved Design Lead	Approved Proj. Eng.
J	REVISED PER DBVS-DCL-005	26 JAN 06	SKM	JL	N/A	N/A
I	INCORPORATED COMMENTS	06 SEP 05	WB	JL	N/A	N/A
H	ISSUED FOR REVISION & 90% REPORT	22 APR 05	AA	BM	FWS	TH
G	ISSUED FOR CH2M HILL APPROVAL & 90% REPORT	11 MAR 05	AA	BM	FWS	TH

AMEC DRAWING NO: F-145579-36-A-0106 — REV: J

amec

AMEC PROJECT: 145579-FINAL DBVS DESIGN

U.S. DEPARTMENT OF ENERGY
Office of River Protection

BULK VITRIFICATION
OFF-GAS TREATMENT
CHILLED WATER TREATMENT

NAME	DATE	COMPANY
DRAWN BY		
DESIGNED BY		
CHECKED BY		
DESIGN / AREA LEAD		
DISCIPLINE MANAGER		
PROJECT MANAGER		
DESIGN AUTHORITY		

SIZE F — BLDG NO — INDEX NO — DWG NO — REV — SCALE — EDT — SHEET OF

36-D58-057 OFF-GAS CHILLER PUMP SKID | 36-074-080 OFF-GAS CHILLER SURGE TANK | 36-074-060 OFF-GAS CHILLER EXPANSION TANK | 36-061-058 OFF-GAS CHILLER PUMP

DRAWING TRACEABILITY LIST: DWG NO — TITLE

REFERENCES: REF NUMBER — TITLE — NEXT USED ON

REVISIONS: MFD REV NO — REV DESCRIPTION — REV BY DATE — REV BY — CHECKED BY — CHGD COMPANY

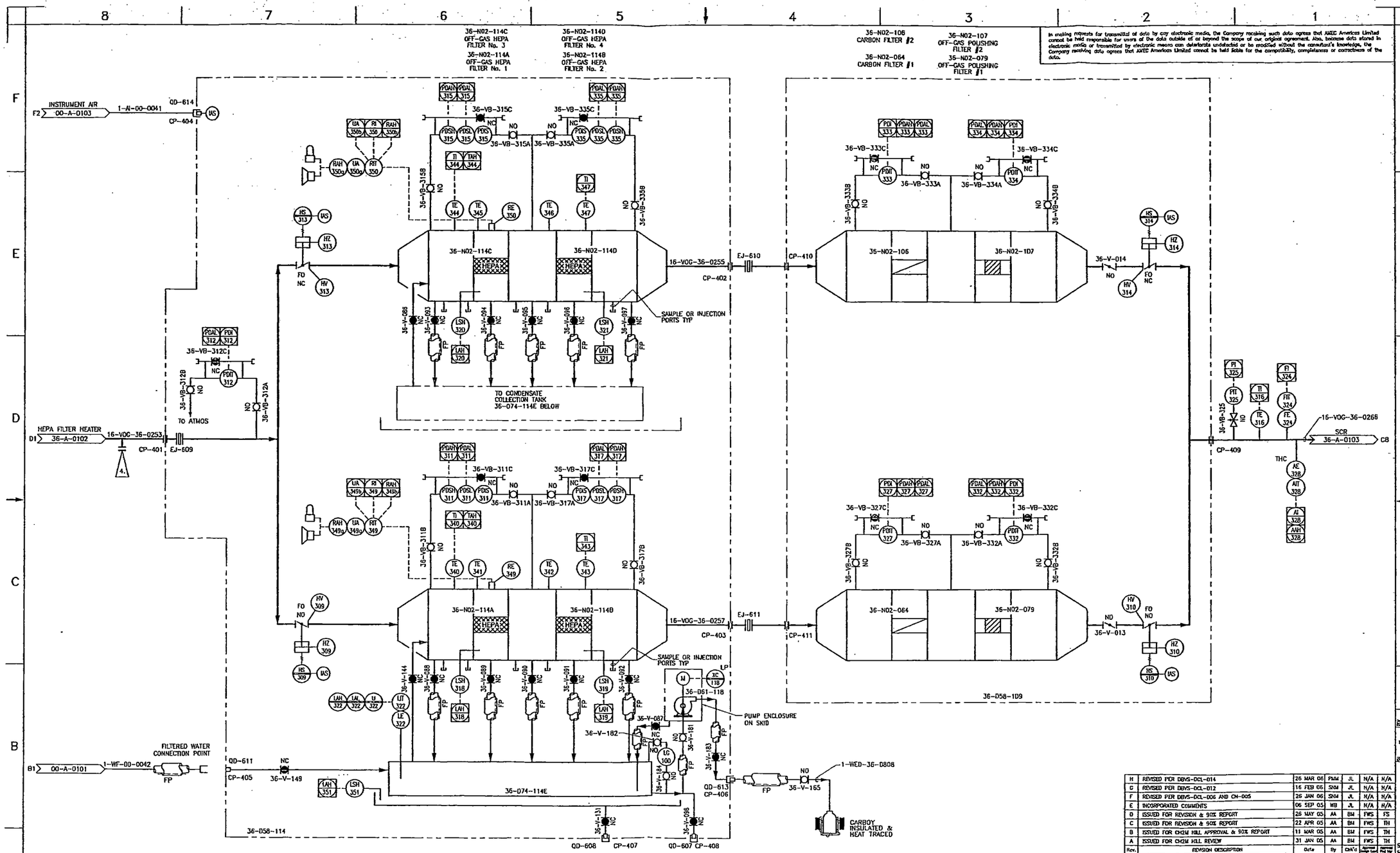

NOTES:

1. INTERLOCK INFORMATION TO BE UPDATED
2. DETAILS FOR THE HEPA FILTER SKID TO BE PROVIDED BY VENDOR FOR SPECIFICATION 145579-D-SP-036.
3. INSTRUMENT AND EQUIPMENT LABELS TO BE REVISED AS PART OF VENDOR DESIGN PACKAGE REVIEW.
4. FLANGE CONNECTIONS FOR HEAT DETECTION, SEE DRAWING F-145579-00-E-0082.

36-D58-114
OFF-GAS HEPA
FILTER SKID

36-D74-114E
OFF-GAS HEPA FILTER
CONDENSATE COLLECTION TANK

36-D61-118
OFF-GAS HEPA FILTER CONDENSATE
COLLECTION TANK PUMP

36-D58-109
OFF-GAS HEGA
FILTER SKID

DWG NO	TITLE	REF NUMBER	TITLE
DRAWING TRACEABILITY LIST		REFERENCES	
		NEXT USED ON	

REV NO	DESCRIPTION	REV BY DATE	REV BY	CHECKED BY	CHGR COMPANY
H	REVISED PER DBVS-DCL-014	26 MAR 06	PMM	JL	N/A
G	REVISED PER DBVS-DCL-012	16 FEB 06	SKM	JL	N/A
F	REVISED PER DBVS-DCL-006 AND CN-005	26 JAN 06	SKM	JL	N/A
E	INCORPORATED COMMENTS	06 SEP 05	WB	JL	N/A
D	ISSUED FOR REVISION & 90% REPORT	26 MAY 05	AA	BM	FWS
C	ISSUED FOR REVISION & 90% REPORT	22 APR 05	AA	BM	FWS
B	ISSUED FOR CH2M HILL APPROVAL & 90% REPORT	11 MAR 05	AA	BM	FWS
A	ISSUED FOR CH2M HILL REVIEW	31 JAN 05	AA	BM	FWS

REVISIONS

Rev.	REVISION DESCRIPTION	Date	By	Ch'k'd	Approved Design Lead	Approved Proj Mgr

AMEC DRAWING NO: F-145579-36-A-0107 REV: H

amec

NAME	DATE	COMPANY
DRAWN BY		
DESIGNED BY		
CHECKED BY		
DESIGN / AREA LEAD		
ENGINEERING MANAGER		
PROJECT MANAGER		
DESIGN AUTHORITY		

AMEC PROJECT: 145579-FINAL DBVS DESIGN

U.S. DEPARTMENT OF ENERGY
Office of River Protection

BULK VITRIFICATION
OFF-GAS HEPA &
HEGA FILTER P&ID

SIZE: F | BLDG NO | MODEL NO | DWG NO | REV

SCALE | SHEET OF

In making requests for transmittal of data by any electronic media, the Company receiving such data agrees that AMEC Americas Limited cannot be held responsible for users of the data outside of or beyond the scope of our original agreement. Also, because data stored in electronic media or transmitted by electronic means can deteriorate undetected or be modified without the consultant's knowledge, the Company receiving data agrees that AMEC Americas Limited cannot be held liable for the compatibility, completeness or correctness of the data.

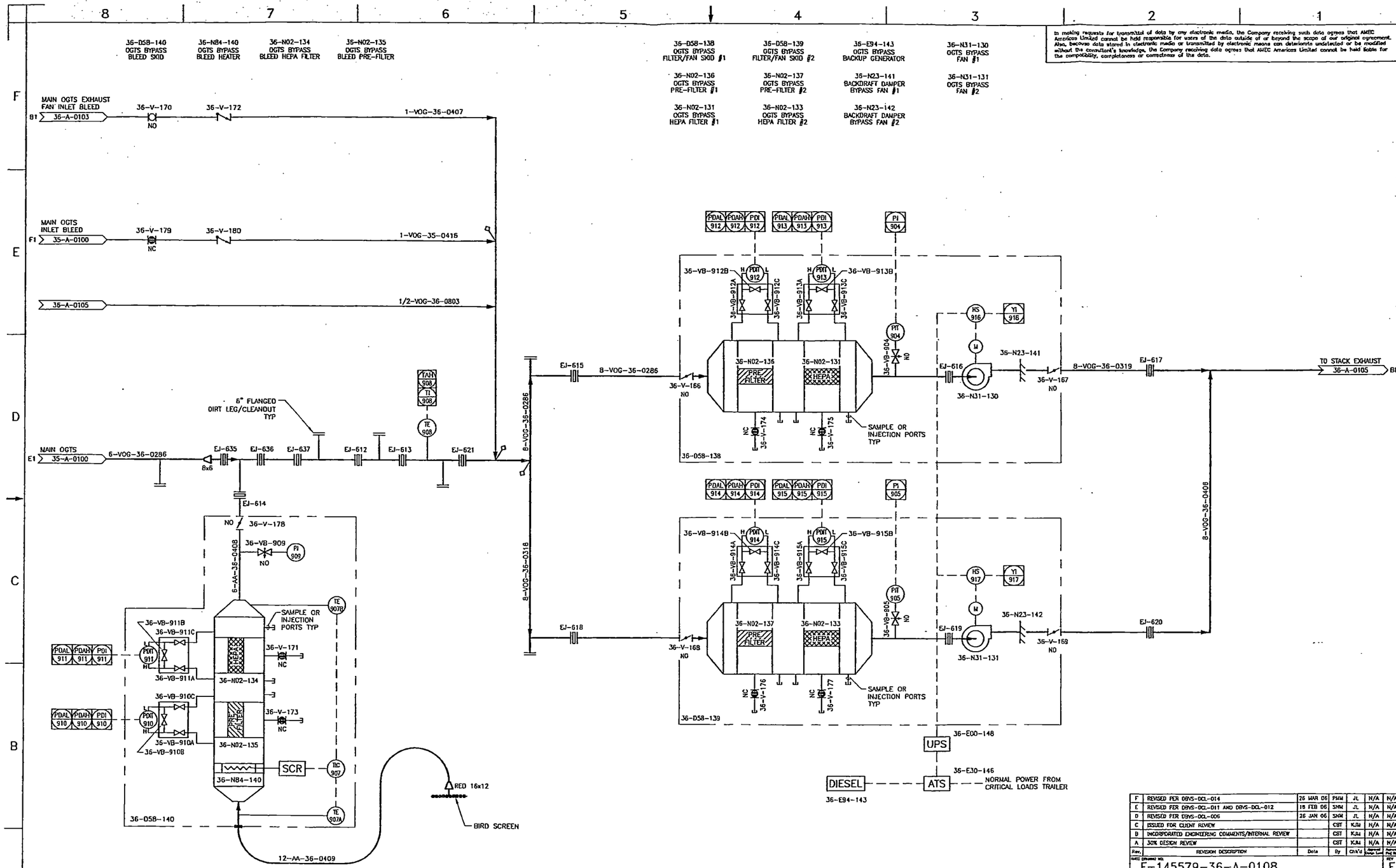

Rev.	REVISION DESCRIPTION	Date	By	Ch'k'd	Approved Amec Lead	Approved Prof Eng
F	REVISED PER DBVS-DCL-014	26 MAR 06	PMM	JL	N/A	N/A
E	REVISED PER DBVS-DCL-011 AND DBVS-DCL-012	15 FEB 06	SMM	JL	N/A	N/A
D	REVISED PER DBVS-DCL-006	26 JAN 06	SMM	JL	N/A	N/A
C	ISSUED FOR CLIENT REVIEW		CBT	KJM	N/A	N/A
B	INCORPORATED ENGINEERING COMMENTS/INTERNAL REVIEW		CBT	KJM	N/A	N/A
A	30% DESIGN REVIEW		CBT	KJM	N/A	N/A

AMEC DRAWING NO. F-145579-36-A-0108 REV F

amec

AMEC PROJECT 145579-FINAL DBVS DESIGN

U.S. DEPARTMENT OF ENERGY
Office of River Protection

BULK VITRIFICATION
OGTS BYPASS
P&ID

NAME	DATE	COMPANY
DRAWN BY		
DESIGNED BY		
CHECKED BY		
MAJOR / AREA LEAD		
UNDERLYING MODELS		
PROJECT MANAGER		
DESIGN AUTHORITY		

SIZE F | BLDG NO | MODEL NO | DWG NO | REV | SCALE | CDF | SHEET 1 OF 1

DRAWING TRACEABILITY LIST

DWG NO	TITLE
–	

REFERENCES

REF NUMBER	TITLE	NEXT USED ON
–		

REVISIONS

NFS REV NO	REV NO	DESCRIPTION	REV BY DATE	REV BY	CHECKED BY	CHK'D COMPANY
–						

In making requests for transmittal of data by any electronic media, the Company receiving such data agrees that AMEC Americas Limited cannot be held responsible for users of the data outside of or beyond the scope of our original agreement. Also, because data stored in electronic media or transmitted by electronic means can deteriorate undetected or be modified without the consultant's knowledge, the Company receiving data agrees that AMEC Americas Limited cannot be held liable for the compatibility, completeness or correctness of the data.

36-061-034A
OFF-GAS SAMPLING
PRIMARY VACUUM PUMP

36-061-034B
OFF-GAS SAMPLING
BACKUP VACUUM PUMP

MCS

FIELD

PARTICULATE MONITOR AI 705

GAMMA MONITOR RI 704

HIGH RADIATION ALARM RA 708

BETA MONITOR RI 703

EFFLUENT MONITOR FAULT UA 707

E1 INSTRUMENT AIR 00-A-0103 — 1-AI-00-0035 — CP-01 — MS

SM-01
INTEGRATED CONTROL CONSOLE
GEMS-100(V3) ELECTRONIC CONSOLE

I/O
CUSTOMER INTERFACE PANEL

DATA STORAGE & TRANSFER COMPUTER

PUMP CONTROL MODULE

LOCAL ELECTRICAL BOX

CAEM-02
CONTINUOUS AIRBORNE EFFLUENT MONITOR

C8 OGTS RAD RECORD 36-A-0103 SAMPLE — X-VOG-36-0500 — CP-07

36-V-240 NO; NC 36-V-241

1-3 SCFM

47MM PARTICULATE FILTER (RECORD SAMPLER)

2.25" O.D. IODINE ADSORPTION CARTRIDGE (RECORD SAMPLER)

NC 36-V-242

36-V-243 NO

FC 726; FT 725; FE 726; S; FV 726 — MASS FLOW CONTROLLER

FH-615 — 36-V-244

B8 OGTS RAD CAM 36-A-0103 SAMPLE — X-VOG-36-0501 — CP-08

36-V-245 NO; NC 36-V-246

1-3 SCFM

BETA RX/RSH 705; RE 705

GAMMA I-129 RX/RSH 704; RE 704

47MM PARTICULATE FILTER (CAM SAMPLER)

2.25" O.D. IODINE ADSORPTION CARTRIDGE (CAM SAMPLER)

NC 36-V-247

36-V-248 NO

FC 725; FT 725; FE 725; S; FV 725 — MASS FLOW CONTROLLER

FH-616 — 36-V-249

36-058-101

XC 034B — M

36-V-252 NC — 36-V-253 NC

36-061-034B

36-V-250 NO — 36-V-251 NO

36-061-034A

XC 034A — M

YV 723; S — NO

FH-617 — CP-06

X-VOG-36-0502 SAMPLE RETURN FLOW

OGTS RAD SAMPLE 36-A-0105 RETURN — B8

36-058-101
OFF-GAS RADIATION SAMPLING SKID

DWG NO	TITLE
-	

DRAWING TRACEABILITY LIST

REF NUMBER	TITLE
-	

REFERENCES

NEXT USED ON

REV NO	REV DATE	DESCRIPTION	REV BY	CHECKED BY	DATE
C	27 MAR 08	REVISED PER DBVS-DCL-014	PWM	JL	N/A
B	18 FEB 08	RELEASED PER DBVS-DCL-011 AND DBVS-DCL-012	SKM	JL	N/A
A	26 JAN 08	RELEASED PER DBVS-DCL-006	SKM	JL	N/A

REVISIONS

amec

NAME — DATE — COMPANY

DESIGN BY
DESIGNED BY
DRAWN BY
DESIGN / AREA LEAD
DISCIPLINE MANAGER
PROJECT MANAGER
DESIGN AUTHORITY

AMEC DRAWING NO: F-145579-36-A-0109 — REV C

AMEC PROJECT: 145579-FINAL DBVS DESIGN

U.S. DEPARTMENT OF ENERGY
Office of River Protection

BULK VITRIFICATION
DUCT MONITORING
P&ID

SIZE F — SCALE — CDT — SHEET OF — DWG NO — REV

Appendix G5

APPENDIX G5

MAIN OFF-GAS TREATMENT SYSTEM

Specification Number	Revision	Title	Page
145579-D-DS-058.5	2	*NaOH 15% Solution Tank*	G5-3
145579-D-DS-067.01	0	*OGTS Bypass UPS – Genset*	G5-14
145579-D-SP-036	1	*Off-Gas Treatment System HEPA Filter Skid Assembly Design and Fabrication*	G5-19
145579-036-CN-001	N/A	*Change Notice for OGTS HEPA Filter Skid Specification 145579-D-SP-036, Rev 1*	G5-337
145579-036-CN-002	N/A	*Change Notice for OGTS HEPA Filter Skid Specification 145579-D-SP-036, Rev 1*	G5-345
145579-036-CN-003	N/A	*Change Notice for OGTS HEPA Filter Skid Specification 145579-D-SP-036, Rev 1*	G5-346
145579-036-CN-005	N/A	*Change Notice for OGTS HEPA Filter Skid Specification 145579-D-SP-036, Rev 1*	G5-348
145579-036-CN-006	N/A	*Change Notice for OGTS HEPA Filter Skid Specification 145579-D-SP-036, Rev 1*	G5-350
145579-D-SP-037	1	*Wet Scrubber Skid Assembly Design and Fabrication*	G5-352
145579-E-DS-013.01	0	*Off-Gas Bypass UPS – Uninterruptible Power Supply*	G5-598
145579-E-DS-013.02	0	*Off-Gas Bypass UPS – Automatic Transfer Switch*	G5-603
145579-F-DS-002.1	1	*Off-Gas Stack Monitoring Equipment Data Sheets*	G5-607
145579-F-DS-002.2	0	*Off-Gas Radiation Monitoring Equipment Data Sheet*	G5-612
145579-V-DS-012.1	2	*Air-Cooled Scroll Chiller*	G5-618
145579-V-SP-001	2	*Specification for Selective Catalytic Reduction Unit (SCR)*	G5-620
145579-V-SP-002	2	*Sintered Metal Filter*	G5-723
145579-V-SP-004	4	*Exhaust Fans*	G5-782

Specification Number	Revision	Title	Page
145579-V-SP-004-CN.001	N/A	Change Notice for *Exhaust Fans Specification 145579-V-SP-004, Rev. 4*	G5-907
145579-V-DS-004.1	3	*Exhaust Fans*	G5-912
145579-V-DS-004.02	A	*Exhaust Fan Variable Frequency Drive*	G5-917
145579-V-SP-005	3	*Steel Exhaust Stack*	G5-921
V-SP-005.R03.3	1	Change Notice for *Steel Exhaust Stack Specification 145579-V-SP-005, Rev 3*	G5-1027
145579-V-SP-005-CN-002	N/A	Change Notice for *Steel Exhaust Stack Specification 145579-V-SP-005, Rev 3*	G5-1029
145579-V-DS-005.1-CN-001	1	Change Notice for *Exhaust Stack Data Sheets 145579-V-DS-005.1, Rev. 7*	G5-1031
145579-V-SP-010	1	*HEGA Filter Skid*	G5-1038
145579-V-SP-011	1	*Off-Gas Chiller Pump Skid*	G5-1171
TECN 023.000	N/A	Change Notice for *Off-Gas Chiller Pump Skid Specification 145579-V-SP-011, Rev. 1*	G5-1317
TECN 023.001	N/A	Change Notice for *Off-Gas Chiller Pump Skid Specification 145579-V-SP-011, Rev. 1*	G5-1318
TECN V-SP-011.R01.2	N/A	Change Notice for *Off-Gas Chiller Pump Skid Specification 145579-V-SP-011, Rev. 1*	G5-1319
145579-011-CN-005	N/A	Change Notice for *Off-Gas Chiller Pump Skid Specification 145579-V-SP-011, Rev. 1*	G5-1330
145579-V-SP-017	0	*Off-Gas Treatment System Bypass Filter/Fan and Bypass Bleed Skid Assemblies Design and Fabrication*	G5-1332

145579-D-DS-058.5

Action 824 Index _____ Record _____

TECHNICAL DATA SHEET
AMEC Americas Limited

amec

The document revision number is indicated below. Please replace all revised pages of this document and destroy the superseded copies.

PROJECT:	**Final DBVS Design**	**145579-D-DS-058.5**	**REV. 2**
PROJECT NO.:	**145579**	**NaOH 15% Solution Tank**	
CLIENT:	**AMEC E&E - Richland, Washington**	**EQ. NO.:**	**36-D74-113; 36-D74-113A; 36-D74-113B; 36-D57-113F**

REV. NO.	ISSUED FOR	ORIGIN	DATE	INITIAL
A	Internal Review (Issued under 145579-V-DS-015.5)	AP	8-Feb-05	AP
B	Internal Approval (New Document No.: 145579-D-DS-058.5)	AP	24-Feb-05	AP
C	CH2M Hill Review	SH	7-Mar-05	SH
0	Bid Request	SH	6-Apr-05	SH
1	Tank Size Increase	JL	22-Nov-05	JL
2	Address CH2M HILL Comments	CG	11-Jan-06	CG

DOCUMENT APPROVAL

CLIENT APPROVAL (AMEC RICHLAND)
Original Signatures on File

Project Manager: _____

Date: _____

Q.A. Rep.: _____

Date: _____

CLIENT APPROVAL (CH2M HILL)

Project Manager: _____

Date: 1/12/06

DMJM H&N
Original Signatures on File

Project Manager: _____

Date: 1/11/06

Discipline Lead: _____

Date: 1/11/06

Originator: _____

Date: 1/11/06

TECHNICAL DATA SHEET
AMEC Americas Limited

amec

The document revision number is indicated below. Please replace all revised pages of this document and destroy the superseded copies.

PROJECT:	**Final DBVS Design**	**145579-D-DS-058.5**	**REV. 2**
PROJECT NO.:	**145579**	**NaOH 15% Solution Tank**	
CLIENT:	**AMEC E&E - Richland, Washington**	**EQ. NO.:**	**36-D74-113; 36-D74-113A; 36-D74-113B; 36-D57-113F**

REV. NO.	ISSUED FOR	ORIGIN	DATE	INITIAL
A	Internal Review (Issued under 145579-V-DS-015.5)	AP	8-Feb-05	AP
B	Internal Approval (New Document No.: 145579-D-DS-058.5)	AP	24-Feb-05	AP
C	CH2M Hill Review	SH	7-Mar-05	SH
0	Bid Request	SH	6-Apr-05	SH
1	Tank Size Increase	JL	22-Nov-05	JL
2	Address CH2M HILL Comments	CG	11-Jan-06	CG

DOCUMENT APPROVAL

CLIENT APPROVAL (AMEC RICHLAND)
Original Signatures on File

JEFF JEFFERS

Project Manager: Jeff Jeffers

Date: 1-12-06

Q.A. Rep.: Hank M. Chafin
HANK CHAFIN

Date: 01-12-06

CLIENT APPROVAL (CH2M HILL)

Project Manager: _____

Date: _____

DMJM H&N
Original Signatures on File

Project Manager: J. Ha Fischer

Date: 1/11/06

Discipline Lead: Jo Ford Lang

Date: 1/11/06

Originator: Charles E. Gerard

Date: 1/11/06

amec

TECHNICAL DATA SHEET

PROJECT:	Final DBVS Design	145579-D-DS-058.5	REV. 2
PROJECT NO.:	145579	NaOH 15% Solution Tank	
CLIENT:	AMEC E&E - Richland, Washington	EQ. NO.:	36-D74-113; 36-D74-113A; 36-D74-113B; 36-D57-113F

REFERENCE ATTACHMENT

Document No.	Specification
N/A	N/A

CONTENTS

Data Sheet ..... 2 Pages

Bidders Drawing & Data Commitments Sheet ..... 1 Page

Appendix A ..... 3 Pages

Appendix B ..... 2 Pages

amec

TECHNICAL DATA SHEETS

PROJECT:	Final DBVS Design	145579-D-DS-058.5	REV. 2
PROJECT NO.:	145579	NaOH 15% Solution Tank	
CLIENT:	AMEC E&E - Richland Washington	EQ. NO.: 36-D74-113; 36-D74-113A; 36-D74-113B; 36-D57-113F	

No. Required	1	Area	Off Gas 36
P&ID#	F-145579-36-A-0102	Stream No.	
Reference Specification:	N/A	Quality Assurance Level	CQ

Operating Conditions			Rev				Rev
Location (Indoors/Outdoors)		Outdoors		Environmental Conditions			
Operation (Continuous / Intermittent)		Intermittent		Ambient Temperature Range	(°F)	-25 to 115	
Days per year		365		Relative Humidity Range	(%)	10 to 100	
Hours per day		24		Hail Diameter	(in)	< or = 0.75	
Noise Level Allowable per 8 hr shift (dB - Lex)		85		Sand and dust concentrations	(lbm/ft³)	1.1×10^{-5}	
Shift Length	(hrs)	8		- typical size	(mm)	0.15	
Noise Level Allowable	(dB)	85		Solar Radiation (12-hour period)	(langleys)	900	
Site Elevation	(ft)	663		Availability	(%)	95	
Min Outdoor Operational Service	(years)	2		Environment - Radioactive		No	
Max Outdoor Operational Time	(years)	5		- Toxic		Yes	
Nominal Operating Temperature	(°F)	77	1	- Corrosive to steel on ambient T		No	
				- Flammable		No	

Storage Tank Information							
General				**Tank Attachments**			
Manufacturer (or approved equal)		Highland Tank		Site Level Gage		No	
Model Number		Double Wall UL-142		Manway & Fill Cap (Non-sealed)	(in)	18	
Fluid to be stored Composition				Vent Pipe		Yes	
-water	%	85		**Tank Accessories**			
-NaOH - caustic	%	15		Ladders		Yes	
Viscosity	(cP)	2.07		Tie Down System		Yes	
Specific Gravity		1.16		Tank Level Sensing System- By Others		Yes	0
Double Wall Storage Capacity	USG	15000	1	Leak Detection Unit (24 VDC dry contact)		Yes	0
Overall Dimensions				Power Supply		24 VDC	
Diameter	(in) *		1	- Interface options for client control system		yes	
Height	(in) *		1	Fluid Isolation Valves (refer comment 3)			2
Material (refer comment 2)		Carbon Steel	2	- Suction Line		Yes	
Density		n/a		- Discharge Line		Yes	
Additional Coating	*		0	Process temperature sensor for heater controller		Yes	
Shipping Weight	(lbs)*		0	Pump Platform		Yes	2
Operating Weight	(lbs)*		0	**36-D57-113F Mixer/Agitator**			
Fluid pressure				Manufacturer		Eastern	
Tank Fittings (Nozzles) as per Fig.1				Type-top entry, electrically driven		BHD	
Fill-in				Motor (refer comment 3)	(hp) *		2
N1 -Caustic	(in)	2		Voltage/Phase/Hertz	(V/Ph/Hz)	480/3/60	
N2 -Water	(in)	2		**36- D91 - 0113B NaOH Tank Heater**			
N3 Draw-out	(in)	2		Voltage	(V/Ph/Hz)	480/3/60	
N4 Level Transmitter	150 lb Flg. (in)	2	0	Electrical power (refer comment 5)	(kW)	53	1
N5 Leak Detection Unit	(in) *		0	Over-temperature sensor (Type K - thermocouple)		Yes	
Fitting -Drain		Yes		Heater controller (refer comment 3)		No	
Lining -Inside		Yes		Process sensor for heater controller (RTD)		Yes	
-type	*			**36- D61 - 0113A NaOH 15%Tank Pump**			
Thermal Insulation		Yes		Pump Manufacturer (refer comment 3)		Wilden	
-type	*			Air Diaphragm Displacement, Air Driven Pump Type		P1	
				Flow	(gpm)	1.27	
				Suction Head	(ftWG)	28.8	
				Total Dynamic Head	(ftWG)	54.5	

Date	9-Feb-05	24-Feb-05	7-Mar-05	6-Apr-05	22-Nov-05	11-Jan-06
By	AP	AP	SH	SH	JL	CG
Chked	DW	DW	AP	GJ	KM	JL
Rev.	A	B	C	0	1	2

amec

TECHNICAL DATA SHEETS

Data sheet 2 of 2

Comments:

Comment 1:

One vertical, cylindrical, flat bottom, double wall storage tank for the Demonstration Bulk Vitrification System project will be procured in accordance with Highland Tanks catalog specifications for the UL-142 (Appendix A) or equivalent, in accordance with requirements for Caustic NaOH 15% / water 85% solution storage. Requirements in addition to the catalog specifications are provided in this data sheet. The stored solution will be used as a reagent in scrubbing acid gases from the Off-Gas in a Wet Scrubber Skid. Penetrations for Mixer/Agitator and Tank Heater to be based on requirements for components identified by the VENDOR.

Comment 2: Applicable Standards

The NaOH Storage Tank shall be designed, tested, rated, and certified in accordance with, and installed in compliance with applicable sections of the following Standards and Codes:

- ASTM (American Society for Testing and Materials)
  - A36 A53/A36M- Standard Specification for Carbon Structural Steel
  - A53 A53/A53M-99b Specification for Pipe, Steel, Black and Hot-Dipped, Zinc-Coated, Welded and Seamless
  - A569/A569M-98 Specification for Steel, Carbon (0.15 Maximum, Percent), Hot-Rolled Sheet and Strip Commercial Quality
- API 620 Design and Construction of Large, Welded, Low Pressure Storage Tanks
- ANSI Standard B16.5 Pipe Flanges and Flanged Fittings
- 29 CFR 1910.106 Occupational Safety and Health Administration, Flammable and Combustible Liquids.

Comment 3: General

- The NaOH Storage Tank shall conform to all aspects of the product data sheets and drawings provided in Appendix A, unless otherwise specified. Tank shall be placed onto a conrete pad. Tank loading shall not exceed 3,000 psf when fully loaded.
- The NaOH Storage Tank shall be designed to be relocated at least twice during its operational life. The Tank shall be designed to be transported over the road. Note: The Buyer shall lift the equipment using a forklift or crane, using the lifting points designed for that purpose.
- Flange faces shall be covered to prevent damage and prevent ingress of debris during shipment. Blind flanges shall be installed on flange connection points to prevent damage to flange faces during shipment.
- All electrical work shall be performed in compliance with the National Electrical Code (NEC®). An NEC inspection shall be completed at the factory prior to shipment. All electrical equipment shall be listed or labeled by a Nationally Recognized Testing Laboratory.
- The heater and temperature sensors shall be wired to dedicated junction boxes. A 480V, 3 phase heater controller (Chromalox # 4268-64X07-0018) shall be provided by others. Vendor shall ensure heater and sensors are compatible with this controller.
- All electric motors shall comply with the requirements of NEMA-MG-1. The motors shall be prewired to lockable, 3 phase, non-fused disconnects, complete with auxiliary contact for disconnect status.
- Isolation valve shall be quarter-turn, ball valves with NPT ends tested to MSS-SP72 at 80-100 psi with water.

Comment 4:

- Items marked with an * shall be filled by VENDOR

Comment 5:

- VENDOR will re-evaluate heater size based on thermal insulation properties. Heater to prevent freezing of fluid.

Figure 1

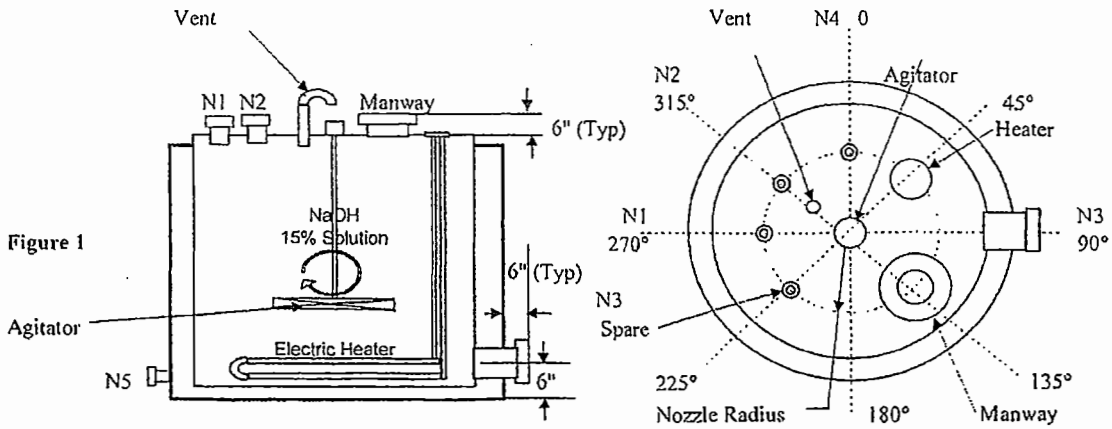

Date	9-Feb-05	24-Feb-05	7-Mar-05	6-Apr-05	22-Nov-05	11-Jan-06	
By	AP	AP	SH	SH	JL	CG	
Chked	DW	DW	AP	GJ	KM	JL	
Rev.	A	B	C	0	1	2	

amec

TECHNICAL DATA SHEETS

PROJECT:	Final DBVS Design	145579-D-DS-058.5	REV. 2
PROJECT NO.:	145579	NaOH 15% Solution Tank	
CLIENT:	AMEC E&E - Richland, Washington	EQ. NO.: 36-D74-113; 36-D74-113A; 36-D74-113B; 36-D57-113F	

BIDDERS DRAWING AND DATA COMMITMENTS

Vendor shall supply all drawings, manuals and documentation in the quantities indicated. Approval drawings are due within the listed number of calendar days after issue of the Purchase Order or Letter of Intent. The dates set out for drawing and data submissions are governed by the engineering design schedule of the project. The Vendor shall supply one AutoCAD disk file and requested number of copies within the listed number of calendar days. Final drawings must be certified as correct and bear the Vendors name, equipment number and Purchase Order Number. Drawing Transmittals listing the document numbers, revisions numbers, quantities, status and document types must be included with all submissions (including electronic submittals).

SEND ALL DOCUMENTS TO:

Submit all documents via courier service
Faxed documents must be followed by the originals.
Electronic E-mail or FTP transmissions of drawings & data must be copied to Document Control
Always include a transmittal

AMEC E&E
1135 Jadwin
Richland, Washington
99352
Attn: Document Control
Phone: (509) 942-1292
Fax: (509) 942-1122

BIDDERS MUST PROVIDE ESTIMATED LEAD TIMES FOR APPROVAL DRAWINGS

Proposal	Bidder shall include this data for each item			REVIEW ITEMS DUE WITHIN (DAYS)	VENDOR COMMITMENT (SEE NOTE 4) (DAYS)
	Review	Required before ordering or start of fabrication			
		Final	Required within 7 days prior to shipment and before final payment		
PROPOSAL	REVIEW	FINAL	DESCRIPTION		
1			Experience list and maintainability information	Bid	
E+3	E+3		Design, fabrication & delivery schedule	PO+7	
			Single line block diagram		
E+3	E+3	E+6	Outline drawings and layout drawings indicating weights and dimensions	PO+10	
E+3	E+3	E+6	Technical brochures on purchased components	PO+14	
E+3	E+3	E+6	Electrical schematics, wiring, diagrams and nameplate lists	PO+14	
	E+3	E+6	Calculations	PO+14	
	E+1	E+6	Spare parts list	Del-14	
	E+1	E+6	Set of installation and maintenance manuals c/w technical literature for all equipment and devices	Del-14	

Legend:
E – Electronic Copy – PO+7 – Due within 7 calendar days of P.O. issuance – Del-7 – Due within 7 calendar days of delivery COM+7 – Due within 7 calendar days of commissioning

THE TIMELY RECEIPT OF THE VENDOR DOCUMENTS IS CRITICAL TO THIS PROJECT

I agree to provide the listed documentation and data and the dates shown above.

Vendor Signature _____ Date _____

TECHNICAL DATA SHEETS

PROJECT:	Final DBVS Design	145579-D-DS-058.5
PROJECT NO.:	145579	Appendix A Highland Vertical Tank Brochure
CLIENT:	AMEC E&E - Richland, Washington	

APPENDIX A

Highland Vertical Tank Brochure
(3 Pages, Including Cover)

Highland Vertical Storage Tanks

Highland Tank®

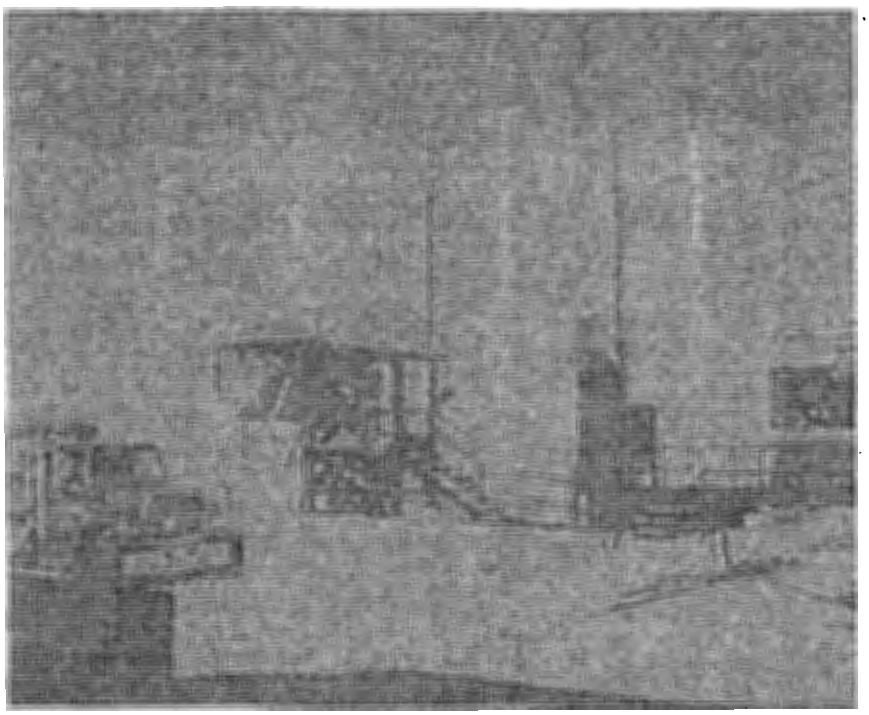

UL-142 Vertical Storage Tanks

Highland Vertical Storage Tanks are ideal for the storage of a wide variety of liquids. Available in carbon and stainless steel, Highland Vertical Tanks for the storage of flammable and combustible liquids bear the Underwriters Laboratories UL-142 label. Tanks can also be manufactured to API650, Appendix J for shop built tanks.

Highland UL-142 tanks are available in single-wall, double-bottom, or double-wall (sides & bottom) construction. Vertical UL-142 tanks over 64" diameter are provided with a coned top to shed rainwater and snow. UL-142 specifications limit construction to a maximum vertical shell height of 35'0".

Because piping installations vary with each tank, the size and location of fittings can be specified by the end-user. Up to 24" of threaded fittings are generally included with the tank. Normal and emergency venting is required on all UL-142 Aboveground Vertical tanks.

Tanks are provided with a coat of primer. Special surface preparation and primers are available to accomodate your field finish coat specifications. Highland can also provide complete VOC compliant finish systems. Field touch-up will be required due to tank shipping and handling, and piping and accessory installation.

Special linings are available for storage of fertilizers, potable water, chemicals, etc. Other options include: coned bottom, legs, ladders, cages, handrails, gauging systems, heaters, flame arrestors, sumps, sight glasses and flanges.

Our Commitment to Industry

Service, Quality and Delivery at Competitive Prices

Highland is committed to producing high-quality steel tank products. We've been manufacturing tanks for more than 50 years, always striving for excellence. For information on other products, please call one of our offices or contact your local Highland representative.

General Arrangement - Single-wall

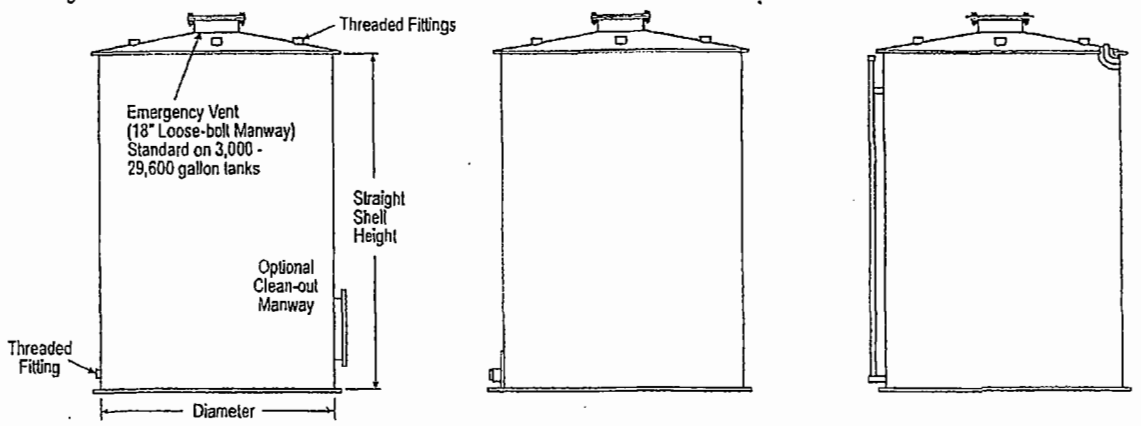

Nominal Capacity (Gallons)	Dimensions Diameter	Dimensions Shell Height	Thickness Shell & Bottom Head	Thickness Top Head	Approximate Wt. Single-wall (lbs.)
185	3'2"	3'4"	12 ga.	14 ga.	155
240	3'2"	4'0"	12 ga.	14 ga.	238
300	3'2"	5'0"	12 ga.	14 ga.	272
500	4'0"	5'5"	12 ga.	12 ga.	415
1,000	4'0"	10'9"	10 ga.	10 ga.	958
1,000	5'4"	6'0"	7 ga.	10 ga.	1,128
1,500	5'4"	9'0"	7 ga.	10 ga.	1,608
2,000	5'4"	12'0"	7 ga.	10 ga.	1,988
3,000	8'0"	8'0"	1/4"	7 ga.	4,076
4,000	8'0"	10'6"	1/4"	7 ga.	4,500
5,000	8'0"	13'4"	1/4"	7 ga.	5,196
6,000	8'0"	16'0"	1/4"	7 ga.	5,850
8,000	10'0"	14'0"	1/4"	7 ga.	6,415
10,000	10'0"	17'0"	1/4"	7 ga.	7,532
12,000	10'0"	20'6"	1/4"	7 ga.	8,649
15,000	10'0"	25'6"	1/4"	7 ga.	10,213
20,000	10'0"	34'0"	1/4"	7 ga.	13,117
20,000	10'6"	31'0"	1/4"	7 ga.	12,750
25,000	12'0"	29'8"	1/4"	7 ga.	16,450
29,600	12'0"	35'0"	1/4"	7 ga.	19,100

Guide Specification

Furnish and install a _____ gallon aboveground vertical, (single wall, double-bottom, double-wall) steel storage tank _____ inches in diameter by _____ high. Tank shall be fabricated from mild carbon steel with a flat bottom head and a coned top(over 64" diameter only). Tank gauge: bottom head and shell gauge _____; Top gauge _____. All items included in tank unit shall be coated with primer. The tank unit shall be manufactured in conformance with Underwriters Laboratories' UL-142 specifications and so labeled.

Provide threaded fittings as per attached drawing. All fittings in coned top shall be full couplings. All UL-142 aboveground single wall tanks shall include fittings for normal and emergency venting.

Tanks shall be fabricated with the following threaded connections : _____ 2 inch, _____ 4 inch, _____ 6 inch as located on attached drawing AND/OR _____ 150# flanged connections with flange protectors. Flange sizes as follows (qty-size): _____, _____, _____, with locations also indicated on drawing. Thread protectors shall be inserted in all threaded openings prior to shipment.

Highland tanks are air tested at the factory but MUST be retested at the jobsite by the installer prior to installation.

Options & Accessories:

- ____ Manway _____ inches in diameter with bolted and gasketed lid
- ____ Loose-bolt manway _____ inches in diameter with bolted and gasketed lid
- ____ Emergency Vent
- ____ External Ladder with Cage
- ____ External Ladder & Platform
- ____ External Stairway
- ____ Walkway(s) with handrails
- ____ 4" x 4" x 1/2" Clip Angle for anchoring
- ____ Coned bottom with Legs; _____ " clearance.
- ____ Commercial grit blast (SSPC-6), epoxy primer coat
- ____ Other exterior coating _____
- ____ Internal Ladder(s)
- ____ Internal Coating _____ (Must include interior weld. Minimum size 500 gallon.)
- ____ Level Sensing System(s)
- ____ Pump Platform

Please visit us at www.highlandtank.com

One Highland Road	4535 Elizabethtown Road	958 19th Street	2225 Chestnut Street	2700 Patterson Street	1510 Stoystown Road
Stoystown, PA 15563	Manheim, PA 17545	Watervliet, NY 12189	Lebanon, PA 17042	Greensboro, NC 27407	Friedens, PA 15541
814-893-5701	717-664-0600	518-273-0801	717-664-0602	336-218-0801	814-443-6800
FAX 893-6126	FAX 664-0617	FAX 273-1365	FAX 664-0631	FAX 218-1292	FAX 444-8662

© Highland Tank - HT-1006 - 11/04

TECHNICAL DATA SHEETS

PROJECT:	Final DBVS Design	145579-D-DS-058.5
PROJECT NO.:	145579	Appendix B Highland Vertical Tank Drawing
CLIENT:	AMEC E&E - Richland, Washington	

APPENDIX B

Highland Vertical Tank Drawing
(2 Pages, Including Cover)

NOTE:
HIGHLAND TANK & MFG. CO. SHALL BE RESPONSIBLE ONLY FOR ITEMS INDICATED ON THIS FABRICATION DRAWING. CONTRACTOR OR OTHERS SHALL BE RESPONSIBLE FOR ANY ITEMS NOT INDICATED ON DRAWING INCLUDING, BUT NOT LIMITED TO, INTERNAL / EXTERNAL PIPING–COATINGS–FITTINGS–ACCESSORIES, ETC. APPROVEROF DRAWING SHALL BE RESPONSIBLEFOR VERIFYING CORRECTNESS OF SIZE / LOCATION OF FITTINGS, ACCESSORIES, COATINGS, ETC. HIGHLAND TANK & MFG. CO. SHALL FABRICATE TANK IN ACCORDANCE TO THIS DRAWING (WHICH MAY OR MAY NOT BE IN EXACT ACCORDANCE TO PLANS & SPECIFICATIONS

NOTE:
SEE PLAN VIEW FOR TRUE ORIENTATION & LOCATION OF OPENINGS AND ACCESSORIES

NOTE:
LIFTING LUGS FOR UNLOADING UNIT & STANDING UNIT UPRIGHT TO BE PLACED AS NEEDED BY FABRICATION SHOP

FITTING SCHEDULE

A= 4" ø NPT
B= 18" ø LOOSE BOLT MANHOLE FOR PRIMARY EMERGENCY VENT
C= 2" ø NPT (FITTING FOR LEAK DETECTION)
D= 8" ø CPLG. & ELBOW FOR SECONDARY EMERGENCY VENT (HIGHLAND TANK STANDARD DESIGN)

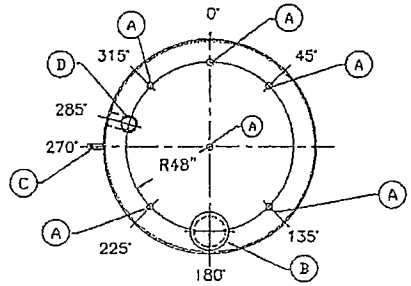

PLAN

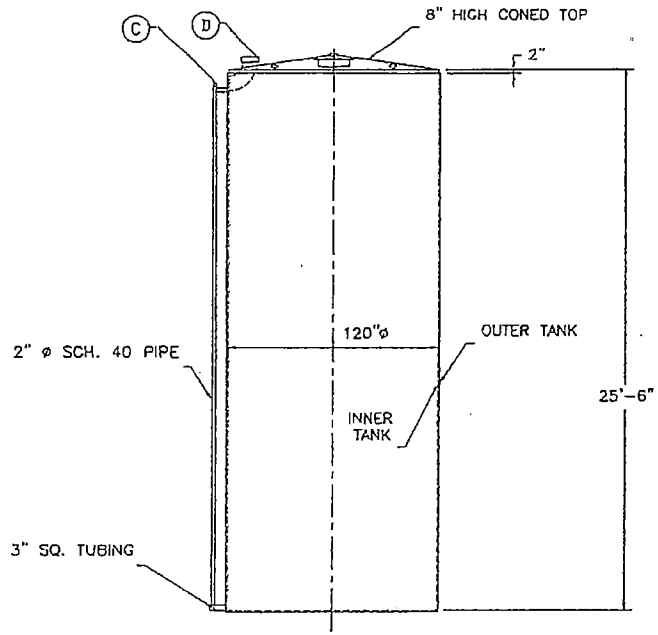

ELEVATION

GENERAL NOTES

CAPACITY : 15000 GALLONS
TYPE : I 360 DOUBLE WALL, ABOVEGROUND VERTICAL
NO. REQ. :
MATERIAL : MILD CARBON STEEL
TEST : 1.5 TO 2.5 P.S.I.

MIN. GAUGE OR THICKNESS (PER U.L. 142):
INNER BOTTOM HEAD : 1/4"
INNER SHELL : 1/4"
OUTER BOTTOM HEAD : 1/4"
OUTER SHELL : 7 GA.
TOP CONE: 7 GA.

PAINT :
INTERIOR : NONE
EXTERIOR : RED PRIMER

CONSTRUCTION : FLAT BOTTOM HEADS, CONED TOP HEAD LAP WELD OUTSIDE SEAMS EXCEPT BUTT FIT & WELD THE LONGITUDINAL SEAMS

APPROVED LABELS : U.L. 142

REVISIONS

Highland Tank

15000 GALLON ABOVEGROUND VERTICAL DOUBLE WALL TYPE I 360

CUSTOMER:

PROJECT:

QUOTE NO:

CHK'D BY:

SCALE:	DATE:	DWG. BY:	DWG. NO.:
3/16"=1'-0"	9-28-99		15KAVDWI

RPP-24544 REV 1d

145579-D-DS-067.01

TECHNICAL DATA SHEET
AMEC Americas Limited

amec

The document revision number is indicated below. Please replace all revised pages of this document and destroy the superseded copies.

PROJECT:	**Final DBVS Design**	**145579-D-DS-067.01**	**REV. 0**
PROJECT NO.:	**145579**	**OGTS Bypass UPS - Genset**	
CLIENT:	**AMEC E&E - Richland, Washington**		

REV. NO.	ISSUED FOR	ORIGIN	DATE	INITIAL
A	Internal Review	BJH	12/9/2005	BJH
0	For Approval	BJH	1/10/2006	BJH

DOCUMENT APPROVAL

CLIENT APPROVAL (AMEC RICHLAND)
Original Approvals on File

Project Manager: [signature]
Date: 1/10/06
Q.A. Rep.: Hank M. Chapin
Date: 01-11-06

CLIENT APPROVAL (CH2M HILL)

Project Manager: [signature]
Date: 1/10/06

DMJM APPROVAL
Original Approvals on File

Project Manager: For JRF [signature]
Date: 1/10/06
Discipline Lead: [signature]
Date: 1/10/06
Originator: [signature]
Date: 1/10/06

amec

TECHNICAL DATA SHEET

PROJECT:	Final DBVS Design	145579-D-DS-067.01	REV. 0
PROJECT NO.:	145579	OGTS Bypass UPS - Genset	
CLIENT:	AMEC E&E - Richland, Washington		

REFERENCE SPECIFICATION

Document No.	Specification
N/A	

CONTENTS

Data Sheet ..... 1 Page

Figure ..... 1 Page

Bidders Drawing & Data Commitments Sheet ..... 1 Page

amec

TECHNICAL DATA SHEETS

PROJECT:	Final DBVS Design	145579-D-DS-067.01	REV. 0
PROJECT NO.:	145579	OGTS Bypass UPS - Genset	
CLIENT:	AMEC E&E - Richland Washington.		

No. Required:	1	Area	36
PFD #		Stream No.	
Reference Specification:	N/A	Quality Assurance Level	Enhanced

Operating Conditions		Rev			Rev
Location (Indoors/Outdoors)	Outdoors	A	Operation - Maximum days per event	10	A
Operation (continuous/intermittent)	Continuous	A	- Hours per day	24	A
Max. Ambient Air Temp. (° F)	115	A	Availability %	100	A
Min Ambient Air Temp. (° F)	-25	A	Elevation (ft)	663	A
Normal Pressure	Atmospheric	A	Environment - Radioactive	No	A
Dusty environment	Yes	A	- Toxic	No	A
Specifications			- Corrosive	No	A
NFPA 110 Class (hrs)	240	A	- Flammable	No	A
NFPA 110 Type (sec)	10	A			
NFPA 110 Level	1	A	**Suggested Manufacturers:**		
Voltage (at 60 Hz)	480V	A	Cummins Northwest		
Phase	3-PH, 3W	A	11134 West Westbow Blvd.		
Rating (kW)	50	A	Spokane, WA 99204		
Motor starting kVA	40	A	(800) 825-2122		
Engine Horsepower *		0			
Maximum voltage dip on startup (%)	15	A			
NRTL-listed and labeled assembly and components	Yes	A			
Options			Kohler Power Systems		
Oversized alternator	Yes	A	(Distributor: Pacific Power Generation)		
Permanent magnet excitation	Yes	A	5808 S. 196th St., Suite B100		
Input harmonic filter	Yes	A	Kent, WA 98032		
Min. 8 hour sub-base tank, double wall, WAC-compliant	Yes	A	(253)-395-9077		
- Fuel pump and low fuel level switch	Yes	A			
Batteries	Yes	A	**Equipment Designations and Numbers**		
Battery charger	Yes	A			
Circuit breakers, 100% rated	Yes	A	36-E94-147 OFF-GAS BYPASS DIESEL GENERATOR		
Air filter/cleaner	Yes	A			
Oil/coolant heaters, as required, for ambient conditions	Yes	A			
Battery heater, as required, for ambient conditions	Yes	A			
Vibration isolation	Yes	A			
Weather protective enclosure housing all equipment (rated for 80mph winds)	Yes	A			
Run-time monitor (non-resetable)	Yes	0			
Digital monitoring and controls package, upgradable	Yes	A			
Lamacoid nameplate w/ equipment no. & designation	Yes	0			

Notes and Comments:

(see next page for figure)

All items with an * shall be filled in by the VENDOR

Date	9-Jan-06	10-Jan-06					
By	DAK	BJH					
Chked		DAK					
Rev.	A	0					

TECHNICAL DATA SHEETS

PROJECT:	Final DBVS Design	145579-D-DS-067.01	REV.	0
PROJECT NO.:	145579	OGTS Bypass UPS - Genset		
CLIENT:	AMEC E&E - Richland Washington			

No. Required:	1	Area	36	
PFD #		Stream No.		
Reference Specification:	N/A	Quality Assurance Level		Enhanced

Notes and Comments:

The generator will be used in conjunction with an in-line UPS as shown in the following one-line diagram:

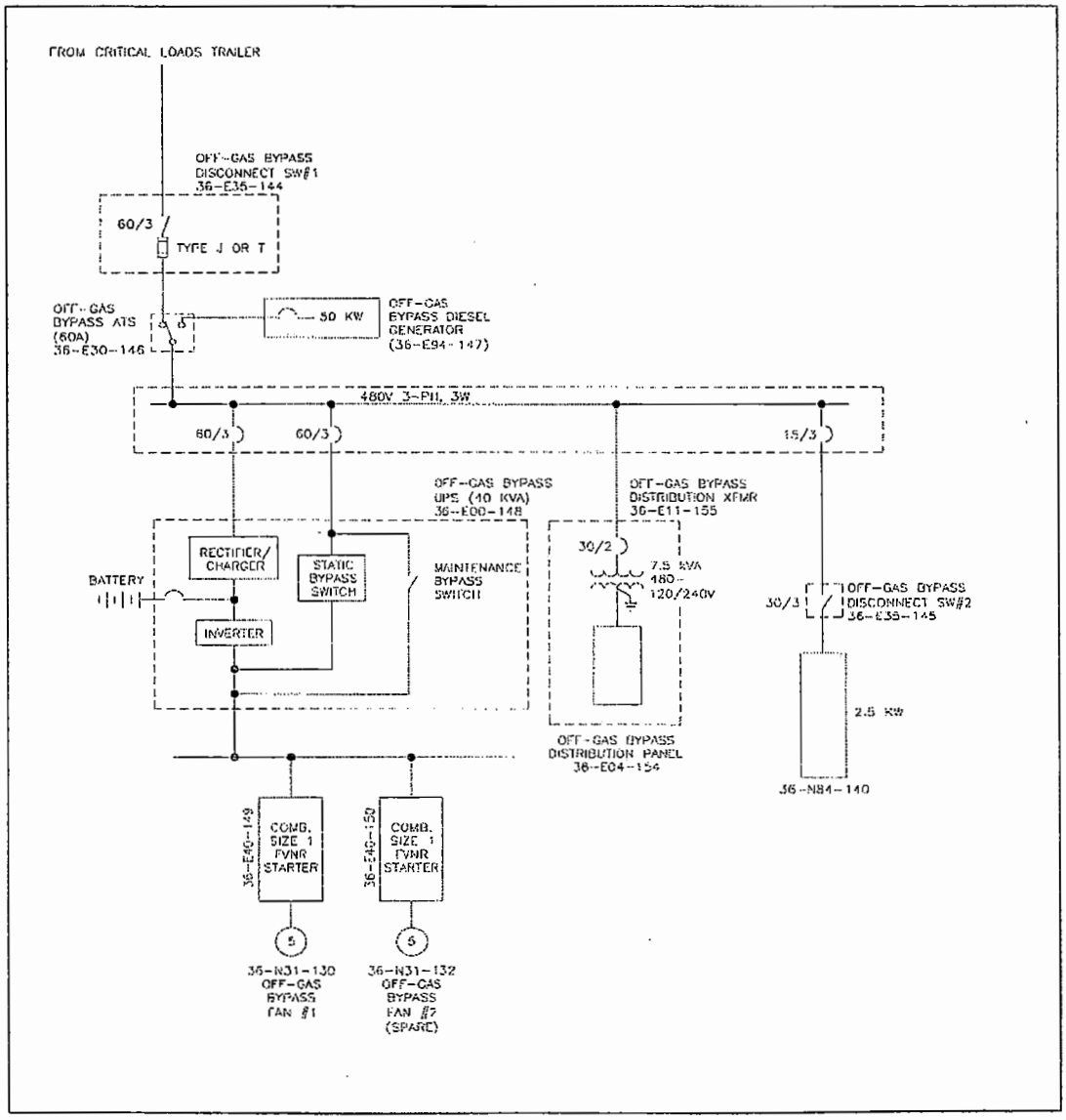

Date	9-Dec-05	10-Jan-06					
By	BJH	BJH					
Chked	JL	BJL					
Rev.	A	0					

amec

TECHNICAL DATA SHEETS

PROJECT:	Final DBVS Design	145579-D-DS-067.01	REV. 0
PROJECT NO.:	145579	OGTS Bypass UPS - Genset	
CLIENT:	AMEC E&E - Richland, Washington		

BIDDER'S DRAWING AND DATA COMMITMENTS

Vendor shall supply all drawings, manuals and documentation in the quantities indicated. Approval drawings are due within the listed number of calendar days after issue of the Purchase Order or Letter of Intent. The dates set out for drawing and data submissions are governed by the engineering design schedule of the project. The Vendor shall supply one AutoCAD disk file and requested number of copies within the listed number of calendar days. Final drawings must be certified as correct and bear the Vendors name, equipment number and Purchase Order Number. Drawing Transmittals listing the document numbers, revisions numbers, quantities, status and document types must be included with all submissions (including electronic submittals).

SEND ALL DOCUMENTS TO:

Submit all documents via courier service
Faxed documents must be followed by the originals.
Electronic E-mail or FTP transmissions of drawings & data must be copied to Document Control
Always include a transmittal

DMJMH+N, Inc.
dba DMJM Technology
3250 Port of Benton Blvd.
Richland, WA 99354-1670
Attn: Project Records
Phone: (509) 375-7856
Fax: (509) 375-5331

BIDDERS MUST PROVIDE ESTIMATED LEAD TIMES FOR APPROVAL DRAWINGS

Proposal	Bidder shall include this data for each item			REVIEW ITEMS DUE WITHIN (DAYS)	VENDOR COMMITMENT (DAYS)
	Review	Required before ordering or start of fabrication			
		Final	Required within 7 days prior to shipment and before final payment		
PROPOSAL	REVIEW	FINAL	DESCRIPTION		
E+3	E+3	E+6	Detailed specifications and manufacturer's data sheets for proposed equipment	PO+7	
	E+3	E+6	Installation and maintenance manuals, with technical literature for all equipment and devices	Del-14	
		E+6	Recommended spare parts list	Del-14	
		E+6	CoCs on all manufacturer specs and data sheet requirements	Del-14	

Legend:
E = Electronic Copy PO+/- = Due within +/- calendar days of P.O. issuance Del+/- = Due within +/- calendar days of deliv. COM+/- = Due within +/- calendar days of commissioning

THE TIMELY RECEIPT OF THE VENDOR DOCUMENTS IS CRITICAL TO THIS PROJECT

I agree to provide the listed documentation and data and the dates shown above.

Vendor Signature _____ Date _____

145579-D-SP-036

amec

TECHNICAL SPECIFICATION

The document revision number is indicated below. Please replace all revised pages of this document and destroy the superseded copies.

PROJECT:	**Final DBVS Design**	**145579-D-SP-036**	**REV. 1**
PROJECT NO:	**145579**	**OFF-GAS TREATMENT SYSTEM HEPA FILTER SKID ASSEMBLY DESIGN AND FABRICATION**	
CLIENT:	**AMEC E&E - Richland, Washington**		

REV No.	ISSUED FOR	ORIGIN	DATE	INITIAL
0	Approval	J. Irwin	09-Dec-04	JJI
1	Approval	J. Irwin	21-Dec-04	JJI

DOCUMENT APPROVAL

CLIENT APPROVAL (AMEC RICHLAND)

Original Approvals On File

Project Manager: L.W. McClure

Date: 12/21/04

Q.A. Rep.: [signature]

Date: 12/22/04

CLIENT APPROVAL (CH2M HILL)

Project Manager: [signature]

Date: 12/22/04

DMJM (RICHLAND)

Original Approvals On File

Project Manager: [signature]

Date: 12/21/04

Discipline Lead: [signature]

Date: 12/21/04

Originator: John J. Irwin

Date: 12/21/2004

BNM technology

amec

TECHNICAL SPECIFICATION

PROJECT:	**Final DBVS Design**	**145579-D-SP-036**	**REV. 1**
PROJECT NO.:	**145579**	**OFF-GAS TREATMENT SYSTEM HEPA FILTER SKID ASSEMBLY DESIGN AND FABRICATION**	
CLIENT:	**AMEC E&E - Richland, Washington**		

TABLE OF CONTENTS

Page

1 SCOPE 8
1.1 INCLUDED IN SCOPE 8
1.2 NOT INCLUDED IN SCOPE 10

2 APPLICABLE DOCUMENTS 11
2.1 GOVERNMENT DOCUMENTS 11
2.2 NON-GOVERNMENT DOCUMENTS 12

3 TECHNICAL REQUIREMENTS 18
3.1 ITEM DEFINITION 18
3.1.1 Item Diagram 18
3.1.2 Interface Definition 19
3.2 CHARACTERISTICS 23
3.2.1 Functional Characteristics 24
3.2.2 Physical Characteristics 25
3.2.3 Reliability 25
3.2.4 Maintainability 26
3.2.5 Environment 27
3.2.6 Transportability and Storage 28
3.2.7 Safety 29
3.3 DESIGN AND CONSTRUCTION 29
3.3.1 Parts/Materials/Processes 29
3.3.2 Industry and Government Standards 67
3.3.3 Radiation 68
3.3.4 Cleanliness 69
3.3.5 Corrosion of Parts 70
3.3.6 Protective Coatings 70
3.3.7 Interchangeability 72
3.3.8 Identification and Marking 72
3.3.9 Nameplates 76
3.3.10 Human Engineering 76
3.3.11 Qualification 76
3.3.12 Document Submittal 83
3.3.13 Personnel and Training 87

4 QUALITY ASSURANCE REQUIREMENTS 89
4.1 GENERAL 89
4.1.1 Design 89
4.1.2 Procurement Document Control 89

4.1.3 Instructions, Procedures, and Drawings 92
4.1.4 Identification and Control of Items 92
4.1.5 Control of Processes 93
4.1.6 Verification and Verification Methods 95
4.1.7 Test Control 95
4.1.8 Control of Measuring and Test Equipment 96
4.1.9 Handling, Storage, and Shipping 97
4.1.10 Inspection, Test, and Operating Status 97
4.1.11 Control of Nonconforming Items 98
4.1.12 Corrective Action 99
4.1.13 Quality Assurance Records 99
4.1.14 Control of Graded Fasteners 99
4.2 INSPECTIONS AND TESTS 100
4.2.1 Electrical Testing 100
4.2.2 Remote Operated Valve Tests 102
4.2.3 Pressure-Leak Test 102
4.2.4 High-Efficiency Particulate Air Filter System Testing 102
4.2.5 Lift Tests 104
4.2.6 Condensate Collection System Leak Test 105
4.2.7 Acceptance Criteria 105
4.2.8 Inspections 105

5 PRESERVATION AND DELIVERY 106
5.1 GENERAL 106
5.1.1 Packaging and Shipping Instruction Manual 106
5.1.2 Operation and Maintenance Manual 106
5.2 PRESERVATION AND PACKAGING 107
5.3 PACKING 107
5.4 MARKING 110
5.5 HANDLING 110
5.6 SHIPPING 111
5.7 RECEIVING 111

6 NOTES 112

7 APPENDICES 113

APPENDICES

A Drawings and Sketches

B ASME AG-1 Compliance Matrix Example

C Example Data Sheets

D Bidder's Drawing and Data Commitments

E TFC-ESHQ-Q_C-C-03, Revision B, *Control of Suspect/Counterfeit Items*

F Request for Information

G Instrumentation Naming and Tagging Convention

FIGURE

Figure 3-1: Interface Panel Wiring to Instrument/ Component Drawing (Example) 65

TABLES

Table 2-1: Government Documents 11

Table 2-2: Non-Government Documents 12

Table 3-1: High-Efficiency Particulate Air Filter Skid Assembly Interface Connections 20

Table 3-2: Air Stream Properties 24

Table 3-3: Environmental Conditions 28

Table 3-4: Wire Color Coding Requirements 57

Table 3-5: Standard Drawing Dimension Tolerances 67

Table 3-6: Pipe Labeling Format 74

Table 3-7: High-Efficiency Particulate Air Filter Skid Assembly Piping 82

ABBREVIATIONS AND ACRONYMS

AISC	American Institute for Steel Construction
ANSI	American National Standards Institute, Inc.
ASCE	American Society of Civil Engineers
ASHRAE	American Society of Heating, Refrigerating, and Air Conditioning Engineers
ASME	American Society of Mechanical Engineers
ASNT	American Society of Nondestructive Testing
ASTM	American Society for Testing and Materials
AWG	American wire gauge
AWS	American Welding Society
B&PV	Boiler and Pressure Vessel
CFR	Code of Federal Regulations
CH2M HILL	CH2M HILL Hanford Group, Inc.
CMTR	Certified Material Test Reports
CoC	Certificate of Conformance
CWI	Certified Welding Inspector
DBVS	Demonstration Bulk Vitrification System
DOE	U.S. Department of Energy
FAT	Factory Acceptance Test
FCI	Fluid Controls Institute, Inc.
FNPT	female national pipe thread
HEGA	high-efficiency gas adsorber
HEPA	high-efficiency particulate air
IEC	International Engineering Consortium
IEEE	Institute of Electrical and Electronics Engineers
IESNA	Illuminating Engineering Society of North America
MCS	Monitoring and Control System
MSS	Manufacturing Standardization Society of the Valve and Fittings Industry, Inc.

NCR	nonconformance report
NDE	nondestructive examination
NEC®	*National Electric Code*
NEMA	National Electrical Manufacturers Association
NFPA	National Fire Protection Association
NRTL	Nationally Recognized Testing Laboratory
OGTS	Off-Gas Treatment System
P&ID	piping and instrumentation diagram
QA	quality assurance
RGS	rigid galvanized steel
rpm	revolutions per minute
RTD	resistance temperature detector
SAE	Society of Automotive Engineers
UL	Underwriters Laboratories, Inc.
w.g.	water gauge
WAC	*Washington Administrative Code*

TRADEMARKS

AutoCAD	Registered trademark of AutoDesk, Inc.
Bray	Registered trademark of BRAY INTERNATIONAL, Inc.
Buna N	Registered trademark of Buna Werke Huls G.m.b.h.
Electromark	Registered trademark of Permar Systems, Incorporated dba Electromark Company.
Flanders BF Series	Trademark of Flanders Corporation.
Flanders GG-F Fluid Seal	Trademark of Flanders Corporation.
Keystone	Trademark of Tyco Industries.
LineBacker	Registered trademark of Professional Services Industries, Inc.
Loctite	Registered trademark of Henkel Loctite.
Mini Power-Zone	Registered trademark of Square D Company Corporation.
NEC	Registered trademark of the National Fire Protection Association.

Neo-Lube	Registered trademark of Watson Bowman ACME Corporation.
Square D	Registered trademark of Square D Company Corporation.
Sta-kon	Registered trademark of Thomas & Betts Corporation.
Swagelok	Registered trademark of Swagelok Company.
Teflon	Registered trademark of E.I. Du Pont De Nemours and Company.
Viton	Registered trademark of DuPont DOW Elastomers.
Weidmüller	Registered trademark of C. A. Weidmüller K.G. Company,

DMM technology

amec

TECHNICAL SPECIFICATION

PROJECT:	Final DBVS Design	145579-D-SP-036	REV. 1
PROJECT NO.:	145579	OFF-GAS TREATMENT SYSTEM HEPA FILTER SKID ASSEMBLY DESIGN AND FABRICATION	
CLIENT:	AMEC E&E - Richland, Washington		

1 SCOPE

Throughout this specification, Contract Responder shall act as the Seller and AMEC Earth and Environmental, Inc. shall act as the Buyer.

1.1 INCLUDED IN SCOPE

The Demonstration Bulk Vitrification System (DBVS) piping and instrumentation diagram (P&ID) and electrical one-line diagram (Appendix A) for the Off-Gas Treatment System (OGTS) high-efficiency particulate air (HEPA) filter skid is provided to the Seller for details of the skid assembly design. This specification provides the minimum requirements for design, analysis, fabrication, inspection, testing, documentation, packaging, and shipping of a HEPA filter skid assembly. Scope shall consist of the following components and activities:

1. Ductwork system and housings for dual stage HEPA filters with test sections. Dual filter trains shall be provided, one active and one redundant, with common inlet and outlet headers.

2. A common condensate drain and collection system.

3. Electrical distribution equipment, motor disconnect switches, local pushbutton stations, transformer, distribution panel, wiring, conduit, and convenience receptacles.

4. Instrumentation and control wiring from skid-based equipment to terminal box.

5. Support structure for component assembly and skid shipping. The HEPA filter skid will be installed on a concrete pad. The Seller is responsible for providing anchor points.

6. Design, fabrication, inspection, and test work plan, including Factory Acceptance Tests (FAT) for systems, subsystems, and components at the vendor's site shall be provided (see Sections 1.1 and 4.2).

7. Develop HEPA filter skid assembly design documentation, supporting calculations, and fabrication drawings.

8. Perform fabrication, assembly, examination, inspection, testing, packaging, and shipping of one HEPA filter skid assembly.

9. Complete an assessment of the HEPA filter skid assembly design and fabrication for compliance with the applicable portions of ASME AG-1 and document this evaluation in the form of an AG-1 compliance matrix; an example of a compliance matrix is provided in Appendix B.

10. Develop a complete quality assurance (QA) data package for the design and assembly of the HEPA filter skid assembly.

11. The HEPA filter skid FAT will be performed at the Seller's facility.

12. The material handled is considered hazardous and radioactive waste that is regulated under the requirements of 40 CFR 264, Subpart J; 10 CFR 830; and WAC 173-303-640. System requirements are also governed by WAC 246-247.

The HEPA filter skid assembly will be part of a full-scale performance test of a treatment processing system for radioactive waste. This test will occur at the Hanford Site after shipment from the Seller's fabrication facilities, the Seller may be requested to provide on-site support for this test.

Drawings and sketches provided with this specification represent a minimum set of Buyer expectations for the assembled system. The Seller shall use this information, along with additional material in the specification, to generate a set of design and fabrication drawings with sufficient detail for construction. Examples of information to be developed by the Seller includes, but is not limited to, dimensioning and associated tolerances, mounting and weld details, and material types and quantities.

The critical characteristics identified by the Buyer for the assembled system are identified on the component data sheets contained in this specification (Appendix C). The Seller shall use this information, along with performance requirements either in the specification or generated from Seller prepared calculations, to generate a completed set of data sheets for components of the assembled system. Form, fit, and function shall be evaluated by the Seller in the course of design work and development of the design and fabrication drawings.

Unless otherwise stated, alternative equipment designs are permissible if proven to be effective in meeting the requirements in this specification. Any alternative design must be thoroughly explained with text supplemented by drawings or sketches and proposed with the original bid. Buyer approval is required before proceeding with an alternative equipment design.

Any discrepancies noted in this specification or between this specification and other documentation shall be noted and referred to the Buyer for resolution before proceeding with design or fabrication of the item in question.

1.2 NOT INCLUDED IN SCOPE

Work not included in this specification is as follows:

1. Installation of the HEPA filter skid assembly at the Buyer's facility.

2. Design and manufacture of connected ductwork or piping systems (external to the skid assembly) that are a part of the DBVS OGTS.

3. Design or manufacture of the electrical conductors on the line side of the 480V power terminal box and the Monitoring and Control System (MCS) side of the instrument terminal box.

4. Motor starters, if required, are located in a remote motor control center.

5. No light fixtures are required, external lighting will be provided at the Buyer's Site.

6. Procurement and installation of Hanford-qualified HEPA filters will be performed by the Buyer once the HEPA filter skid assembly has been accepted at the Buyer's Site.

7. Witness of full-scale performance test is an option that the Buyer may exercise. The Seller shall provide per diem rates for this potential support.

2 APPLICABLE DOCUMENTS

The codes, standards, and other documents listed in Table 2-1 and Table 2-2 are of the latest issue and addenda in effect at the time of procurement (unless otherwise specified). These documents form a part of the basis of design for this procurement to the extent specified in the applicable sections of this specification. In the event of a conflict between documents referenced herein and the requirements of this specification, the requirements of this specification shall take precedence when the specification is more stringent. All conflicts, alternative standards, or omissions shall be brought to the attention of the Buyer for resolution. Significant sections noted are not meant to negate the remainder of the specification, but to emphasize sections of greater importance.

2.1 GOVERNMENT DOCUMENTS

Table 2-1: Government Documents

Government Documents	Title
10 CFR 830	"Nuclear Safety Management," *Code of Federal Regulations*, as amended.
29 CFR 1910	"Occupational Safety and Health Standards," *Code of Federal Regulations*, as amended.
40 CFR 264	"Standards for Owners and Operators of Hazardous Waste Treatment, Storage, and Disposal Facilities," Subpart J, *Code of Federal Regulations*, as amended.
47 CFR 15	"Radio Frequency Devices," *Code of Federal Regulations*, as amended.
DOE/RL-92-36	*Hanford Site Hoisting and Rigging Manual*, U.S. Department of Energy, Richland, Washington.
WAC 246-247	"Radiation Protection – Air Emissions," *Washington Administrative Code*, as amended.
WAC 173-303-640	"Tank Systems," *Washington Administrative Code*, as amended.

2.2 NON-GOVERNMENT DOCUMENTS

Table 2-2: Non-Government Documents (6 sheets)

Code/Standard	Title
AISC	*Manual of Steel Construction—Allowable Stress Design*, Ninth Edition, American Institute of Steel Construction, Chicago, Illinois.
AISC	*Manual of Steel Construction—Load and Resistance Factor Design*, Third Edition, American Institute of Steel Construction, Chicago, Illinois.
ANSI/AWS D1.3	*Structural Welding Code—Sheet Steel*, American Welding Society, Miami, Florida.
ANSI C63.16	*American National Standard Guide for Electrostatic Discharge Test Methodologies and Criteria for Electronic Equipment*, American National Standards Institute, Washington, D.C.
ANSI FCI 70-2	*Control Valve Seat Leakage*, Fluid Controls Institute, Inc., Cleveland, Ohio.
ANSI/IESNA RP-7	*Lighting Industrial Facilities*, Illuminating Engineering Society of North America, New York, New York.
ANSI Y14.1	*Drawing Sheet Size and Format*, American National Standards Institute, Inc., New York, New York.
ANSI Y14.5M	*Dimensioning and Tolerancing*, American National Standards Institute, New York, New York.
ASCE 4-98	*Seismic Analysis of Safety-Related Nuclear Structures*, American Society of Civil Engineers, Reston, Virginia.
ASCE 7-98	*Minimum Design Loads for Buildings and Other Structures*, American Society of Civil Engineers, Reston, Virginia.
ASHRAE Fundamentals Handbook	*2001 ASHRAE Handbook -- Fundamentals*, American Society of Heating, Refrigerating, and Air Conditioning Engineers, Atlanta, Georgia.
ASME AG-1	*Code on Nuclear Air and Gas Treatment*, American Society of Mechanical Engineers, New York, New York.
ASME B&PV Code	*ASME Boiler and Pressure Vessel Code*, American Society of Mechanical Engineers, New York, New York. Section IX, "Welding and Brazing Qualifications"

Table 2-2: Non-Government Documents (6 sheets)

Code/Standard	Title
ASME B16.5	*Pipe Flanges and Flanged Fittings*, American Society of Mechanical Engineers, New York, New York.
ASME B16.9	*Factory-Made Wrought Steel Buttwelding Fittings*, American Society of Mechanical Engineers, New York, New York.
ASME B16.11	*Forged Fittings, Socket Welding and Threaded*, American Society of Mechanical Engineers, New York, New York.
ASME B18.2.1	*Square and Hex Bolts and Screws Inch Series*, American Society of Mechanical Engineers, New York, New York.
ASME B18.2.2	*Square and Hex Nuts*, American Society of Mechanical Engineers, New York, New York.
ASME B30.20	*Below-the-Hook Lifting Devices*, American Society of Mechanical Engineers, New York, New York.
ASME B31.1	*Power Piping*, American Society of Mechanical Engineers, New York, New York.
ASME B31.3	*Process Piping*, American Society of Mechanical Engineers, New York, New York.
ASME NQA-1, 1994*	*Quality Assurance Program Requirements for Nuclear Facilities*, American Society of Mechanical Engineers, New York, New York.
ASME N509	*Nuclear Power Plant Air-Cleaning Units and Components*, American Society of Mechanical Engineers, New York, New York.
ASME N510	*Testing of Nuclear Air Treatment Systems*, American Society of Mechanical Engineers, New York, New York.
ASME PCC-1	*Guidelines for Pressure Boundary Bolted Flange Joint Assembly*, American Society of Mechanical Engineers, New York, New York.
ASNT SNT-TC-1A	*Recommended Practice*, American Society of Nondestructive Testing, Columbus, Ohio.
ASTM A 36/A 36M	*Standard Specification for Carbon Structural Steel*, American Society of Testing and Materials, New York, New York.

Table 2-2: Non-Government Documents (6 sheets)

Code/Standard	Title
ASTM A 53/A 53M	*Standard Specification for Pipe, Steel, Black and Hot-Dipped, Zinc-Coated, Welded and Seamless*, American Society of Testing and Materials, New York, New York.
ASTM A 105/A 105M	*Standard Specification for Carbon Steel Forgings for Piping Applications*, American Society for Testing and Materials, West Conshohocken, Pennsylvania.
ASTM A 106	*Standard Specification for Seamless Carbon Steel Pipe for High-Temperature Service*, American Society for Testing and Materials, West Conshohocken, Pennsylvania.
ASTM A 108	*Standard Specification for Steel Bars, Carbon, Cold-Finished, Standard Quality*, American Society for Testing and Materials, West Conshohocken, Pennsylvania.
ASTM A 182/A 182M	*Standard Specification for Forged or Rolled Alloy-Steel Pipe Flanges, Forged Fittings, and Valves and Parts for High-Temperature Service*, American Society for Testing and Materials, West Conshohocken, Pennsylvania.
ASTM A 193/A 193M	*Standard Specification for Alloy-Steel and Stainless Steel Bolting Materials for High-Temperature Service*, American Society for Testing and Materials, West Conshohocken, Pennsylvania.
ASTM A 194/A 194M	*Standard Specification for Carbon and Alloy Steel Nuts for Bolts for High Pressure and High Temperature Service, or Both*, American Society for Testing and Materials, West Conshohocken, Pennsylvania.
ASTM A 234/A 234M	*Standard Specification for Piping Fittings of Wrought Carbon Steel and Alloy Steel for Moderate and High Temperature Service*, American Society for Testing and Materials, West Conshohocken, Pennsylvania.
ASTM A 240/A 240M	*Standard Specification for Chromium and Chromium-Nickel Stainless Steel Plate, Sheet, and Strip for Pressure Vessels and for General Applications*, American Society for Testing and Materials, West Conshohocken, Pennsylvania.

Table 2-2: Non-Government Documents (6 sheets)

Code/Standard	Title
ASTM A 269	*Standard Specification for Seamless and Welded Austenitic Stainless Steel Tubing for General Service*, American Society of Testing and Materials, New York, New York.
ASTM A 276	*Standard Specification for Stainless Steel Bars and Shapes*, American Society of Testing and Materials, New York, New York.
ASTM A 307	*Standard Specification for Carbon Steel Bolts and Studs, 60 000 PSI Tensile Strength*, American Society for Testing and Materials, West Conshohocken, Pennsylvania.
ASTM A 312/A 312M	*Standard Specification for Seamless and Welded Austenitic Stainless Steel Pipes*, American Society for Testing and Materials, West Conshohocken, Pennsylvania.
ASTM A 325	*Standard Specification for Structural Bolts, Steel, Heat Treated, 120/105 ksi Minimum Tensile Strength*, American Society for Testing and Materials, West Conshohocken, Pennsylvania.
ASTM A 354	*Standard Specification for Quenched and Tempered Alloy Steel Bolts, Studs, and other Externally Threaded Fasteners*, American Society for Testing and Materials, West Conshohocken, Pennsylvania.
ASTM A 403/A 403M	*Standard Specification for Wrought Austenitic Stainless Steel Piping Fittings*, American Society for Testing and Materials, West Conshohocken, Pennsylvania.
ASTM A 480/A 480M	*Standard Specification for* General Requirements for Flat-Rolled Stainless and Heat-Resisting Steel Plate, Sheet, and Strip, American Society for Testing and Materials, West Conshohocken, Pennsylvania.
ASTM A 500	*Standard Specification for Cold-Formed Welded and Seamless Carbon Steel Structural Tubing in Rounds and Shapes*, American Society for Testing and Materials, West Conshohocken, Pennsylvania.
ASTM A 563a	*Standard Specification for Carbon and Alloy Steel Nuts*, American Society for Testing and Materials, West Conshohocken, Pennsylvania.

Table 2-2: Non-Government Documents (6 sheets)

Code/Standard	Title
ASTM A 569	*Standard Specification for Steel, Carbon (0.15 Maximum, Percent), Hot-Rolled Sheet and Strip Commercial*, American Society for Testing and Materials, West Conshohocken, Pennsylvania.
AWS D1.1/D1.1M	*Structural Welding Code—Steel*, American Welding Society, Miami, Florida.
AWS D1.6	*Structural Welding Code—Stainless Steel*, American Welding Society, Miami, Florida.
AWS D9.1/D9.1M	*Sheet Metal Welding Code*, American Welding Society, Miami, Florida.
AWS QC-1	*Standard for AWS Certification of Welding Inspectors*, American Welding Society, Miami, Florida.
HNF-2962	*A List of EMI/EMC Requirements*, Rev. 0, Numatec Hanford Corporation for Fluor Daniel Hanford, Inc., Richland, Washington.
HNF-SD-GN-ER-501	*Natural Phenomena Hazards, Hanford Site, Washington*, Revision 1B, Westinghouse Hanford Company, Richland, Washington.
IEC 61000-4-2	*Electromagnetic Compatibility (EMC) – Part 4-2: Testing and Measurement Techniques – Electrostatic Discharge Immunity Test*, International Engineering Consortium, Chicago, Illinois.
IEEE C62.41.1	*IEEE Guide on the Surge Environment in Low-Voltage (1000 V and Less) AC Power Circuits*, Institute of Electrical and Electronics Engineers, New York, New York.
IEEE C62.41.2	*IEEE Recommended Practice on Characterization of Surges in Low Voltage (1000 V and Less) AC Power Circuits*, Institute of Electrical and Electronics Engineers, New York, New York.
IEEE Std C37.90.2	*IEEE Standard for Withstand Capability of Relay Systems to Radiated Electromagnetic Interference from Transceivers*, Institute of Electrical and Electronics Engineers, New York, New York.
IEEE Std 141	*IEEE Recommended Practice for Electric Power Distribution for Industrial Plants*, Institute of Electrical and Electronics Engineers, New York, New York.

Table 2-2: Non-Government Documents (6 sheets)

Code/Standard	Title
IEEE Std 142	*IEEE Recommended Practice for Grounding of Industrial and Commercial Power Systems*, Institute of Electrical and Electronics Engineers, New York, New York.
IEEE Std 519	*Recommended Practices and Requirements for Harmonic Control in Electrical Power Systems*, Institute of Electrical and Electronics Engineers, New York, New York.
MSS SP-67	*Butterfly Valves*, Manufacturing Standardization Society of the Valve and Fittings Industry, Inc., Vienna, Virginia.
MSS SP-72	*Ball Valves with Flanged or Butt-Welding Ends for General Service*, Manufacturing Standardization Society of the Valve and Fittings Industry, Inc., Vienna, Virginia.
MSS SP-82	*Valve Pressure Testing Methods*, Manufacturing Standardization Society of the Valve and Fittings Industry, Inc., Vienna, Virginia.
NEMA MG-1	*Motors and Generators*, National Electrical Manufacturers Association, Rosslyn, Virginia.
NFPA 70	*National Electrical Code*, 2002 Edition, National Fire Protection Association, Quincy, Massachusetts.
SAE J429	*Mechanical and Material Requirements for Externally Threaded Fasteners*, Society of Automotive Engineers, Warrendale, Pennsylvania.
UBC, 1997	*1997 Uniform Building Code*, International Conference of Building Officials, Whittier, California.
UL 508A	*Standard for Industrial Control Panels*, Underwriters Laboratories, Inc., Northbrook, Illinois.
UL-listed	*Electrical Appliance and Utilization Equipment Directory*, Underwriters Laboratories, Inc., Northbrook, Illinois.
*NQA-1 (the relevant requirements of NQA-1 are included in Section 4).	

3 TECHNICAL REQUIREMENTS

3.1 ITEM DEFINITION

The HEPA filter skid assembly consists of: (1) stainless-steel ductwork and housings for HEPA filters and test sections; (2) process instrumentation and termination panels; (3) electrical power components; and (4) a support structure skid onto which the ductwork and piping system will be mounted and secured. Functionally, the HEPA filter skid assembly will provide a location for inlet and outlet ductwork to receive a conditioned air stream from a wet scrubbing system and then discharge a filtered air stream. It will route the filtered air stream to a high-efficiency gas absorber (HEGA) Filter System. Fans located in a downstream system shall be used to provide the motive force for the air stream.

The upstream (wet scrubbing system) and downstream (HEGA Filter System and the Exhaust Fan System) components are not part of this specification.

The skid assembly shall contain instruments to monitor the temperature, pressure, and other physical characteristics of the air stream. The functions of the skid assembly include air stream particulate removal, primary confinement, primary support for transportation and movement, and interface connections between the skid assembly and other systems of the Bulk Vitrification OGTS.

3.1.1 Item Diagram

The HEPA filter skid assembly shall be designed to comply with Drawings F-145579-00-A-0099, F-145579-00-A-0100, and H-14-106796 and Sketches DBVS-SK-E103, DBVS-SK-M108, and DBVS-SK-P102 provided in Appendix A.

Major components of the HEPA filter skid assembly include:

1. HEPA filter housings with HEPA filters;
2. Test section before and after each of the HEPA filter housings;
3. Inlet and outlet plenums;
4. Interconnecting ductwork;

5. Manual and air-operated valves and ductwork supports;

6. Process instrumentation;

7. Electrical power distribution equipment; and

8. Condensate Collection System with drain and filtered water interface connections.

Sketches DBVS-SK-M108 and DBVS-SK-P102 (Appendix A) are provided for illustration of how the DBVS HEPA filter skid assembly is interconnected.

3.1.2 Interface Definition

The HEPA filter skid assembly will interface with an incoming air stream from a Wet Scrubber System, and the exhaust air stream shall interface with downstream treatment units. The HEPA filter skid assembly shall also interface with the Electrical Supply System, Monitoring and Control System, a Filtered Water System, and a Compressed Air System. System interface requirements for the HEPA filter skid assembly are shown on Drawings F-145579-00-D-0002 and H-14-106796 and Sketches DBVS-SK-E103, and DBVS-SK-M108 (Appendix A), and the interfacing process and electrical connections noted in Table 3-1. The assembled system will sit on foundation #13 (see H-14-106796) and interface with other equipment also located on this foundation.

3.1.2.1 Process Conditions

The process air stream entering the HEPA filter skid assembly originates from the OGTS Wet Scrubber System. The air stream process parameters are described in Section 3.2.1.1.

3.1.2.2 Process Flange Connections

The piping connections at the HEPA filter skid assembly are noted in Table 3-1. These piping connections constitute the primary interface between the interfacing systems and the HEPA filter skid assembly. The main inlet and outlet connections shall be a 16-in. standard 150-lb raised-face flange connection.

Table 3-1: High-Efficiency Particulate Air Filter Skid Assembly Interface Connections (2 sheets)

Connection Point (DBVS-OGTS-HFS-)	Description	Connection[a]
CP-401	Inlet from the Wet Scrubber System	• Ductwork Flange Termination: 16-in. 150-lb RF, ASTM A 105/A 105M[b]. • Sketch DBVS-SK-M108 (Appendix A).
CP-402 CP-403	Outlet to the high-efficiency gas adsorber skid	• Ductwork Flange Termination: 16-in. 150-lb RF, ASTM A 105/A 105M[b]. • Sketch DBVS-SK-M108 (Appendix A).
CP-404	Compressed Air Supply	• 1/2-in. threaded coupling, ASTM A 105/A 105M[b], Grade C with quick disconnect.
CP-405	Condensate Collection Filtered Water Supply	• 1-in. threaded coupling, ASTM A 105/A 105M[b], Grade C with quick disconnect.
CP-406	Condensate Collection Drain via Pump	• 1-in. threaded coupling, ASTM A 105/A 105M[b], Grade C with quick disconnect.
CP-407	Condensate Collection Gravity Drain, Secondary	• 1-in. threaded coupling, ASTM A 105/A 105M[b], Grade C with quick disconnect.
CP-408	Condensate Collection Gravity Drain, Primary	• 1-in. threaded coupling, ASTM A 105/A 105M[b], Grade C with quick disconnect.
N/A	Main electrical distribution connection	• External terminal box (480V ac).
N/A	Motor circuit connection (1)	• External terminal box (480V ac).
N/A	Pushbutton station (1, as required)	• External terminal box (120V ac)
N/A	Main electrical ground connection	• Grounding Lug

Table 3-1: High-Efficiency Particulate Air Filter Skid Assembly Interface Connections (2 sheets)

Connection Point (DBVS-OGTS-HFS-)	Description	Connection[a]
N/A	Main Monitoring and Control System connection	• Generic termination panel.

N/A = not applicable. RF = raised-face.

[a]All piping connectors shall have a suitable blank cover installed during storage or shipment of the skid assembly.

[b]ASTM A 105/A 105M, *Standard Specification for Carbon Steel Forgings for Piping Applications*, American Society for Testing and Materials, West Conshohocken, Pennsylvania.

3.1.2.3 Compressed Air Interface

Compressed air (filtered and dried) will be provided to the skid assembly at a minimum of 5 ft^3/min and 90 psig at the Compressed Air System connection.

3.1.2.4 Condensate Collection Filtered Water Connection

A 1-in. threaded coupling connection with quick disconnect shall be provided on the condensate collection reservoir for flushing the system. The connection shall interface with the project's Filtered Water System.

3.1.2.5 Condensate Drains

The condensate shall be returned to the Buyer's waste tanks or liquid effluent tanks by use of a Seller-provided condensate drain pump. The Condensate Collection System shall include the provision for a gravity drain of the primary and secondary via 1-in. threaded-coupling connections. One-inch threaded-coupling connections with quick disconnect shall be provided on the condensate collection tank pump discharge connection point.

3.1.2.6 Skid Assembly Transport and Installation Interface

The HEPA filter skid assembly shall be configured for conventional transport by truck over public roads and lifted by crane for installation at the Buyer's designated location. The Seller Hoisting and Rigging instructions shall be based on calculations performed by the Seller (see Section 3.3.11.1.8). The HEPA filter skid assembly shall be secured during transport and lift points provided for loading and unloading the assembly. The skid shall have a minimum of four anchor points designed for 1/2 in. or larger anchor bolts for installation on the Buyer's concrete pad. Anchor points and bolts for final skid design will be determined by Seller-performed structural analysis (see Section 3.3.11.1.7).

3.1.2.7 Electrical Connections

A one-line diagram of the electrical connections is shown on Sketch DBVS-SK-E103. The following subsections describe the connections in more detail.

3.1.2.7.1 480V Power Connection

The HEPA filter skid shall receive 480V ac power from an external source. One single-phase, 480V ac circuit shall be provided for the transformer and distribution panel.

All 480V ac circuits shall terminate in a terminal box, located approximately as shown in Sketch DBVS-SK-M108. The outside cover of the terminal box shall be labeled in accordance with Sketch DBVS-SK-E103 (Appendix A). All terminals in terminal boxes shall be rated for 194 °F (90 °C). 25 percent spare terminals shall be provided in all terminal boxes.

Power for the transformer shall be routed from the terminal box to the disconnect switches for the loads.

3.1.2.7.2 Grounding Connection

A grounding lug shall be provided on the outside frame of the skid to facilitate attachment of the skid grounding electrode. The location of the grounding lug

shall be shown on the shop drawings and be clearly labeled on the skid. See Section 3.3.1.9.3 and Sketch DBVS-SK-E103 for grounding requirements.

3.1.2.7.3 Monitoring and Control System Connection

Monitoring and Control System (MCS) functions that are automatic or remote will be provided by the Buyer via the instrumentation interface described below. The local monitoring and control functions for the HEPA filter skid shall include:

1. Operation of the isolation butterfly valves from a local control station. The station will provide clear indication of valve position such that the operator can quickly identify the active train.

2. Differential pressure will be read locally. The pressure instrumentation, identified by the Buyer, provides switches for high and low set-points. These switches will be run to the termination panel.

The Seller shall provide an interface between the physical instruments and components with the use of a Seller-provided termination panel mounted on the skid. The conduit and penetration to and from the termination panel shall be sized 1-in. diameter larger than the required field wiring size, and shall not be sealed internally. This will allow unforeseen wiring needs to be added to the conduit or penetration during construction. The termination panel shall have a 20 percent spare capacity.

Each HEPA filter skid MCS connection shall be capable of operating the contained process and utility equipment from either a 24V dc, or 120V ac termination. Solenoid valves shall be 24V dc. The MCS instruments or components are shown on the HEPA filter skid assembly P&ID (Appendix A).

See Section 3.3.1.15 for MCS termination details.

3.2 CHARACTERISTICS

The characteristics (e.g., functional, physical, and environmental) that the HEPA filter skid assembly must comply with to satisfy the requirements of this specification are described in the following subsections and on data sheets provided with this specification.

3.2.1 Functional Characteristics

The HEPA filter skid assembly shall be designed to filter a conditioned air stream to remove particulate and direct the filtered air stream to additional treatment units downstream.

3.2.1.1 Air Stream Properties

The air stream properties entering the HEPA filter skid assembly are provided in Table 3-2.

Table 3-2: Air Stream Properties

Properties	Data
Nominal Flow Rate:	Design Flow Rate = 4,800 acfm
Static Pressure:	Design Pressure = -94 in. w.g.
Temperature, minimum/maximum at inlet:	167 °F (75 °C)/200 °F (93 °C)
Relative Humidity, maximum at inlet:	70%
Nominal Chemical Components	HF 0.02 ppmV SO_2 2 ppmV NO_x 5,600 ppmV HCl 0.2 ppmV

ppmV = parts per million by volume..
w.g. = water gauge.

3.2.1.2 Performance Range

Characteristics and requirements for the HEPA filter skid assembly shall be as specified in the following subsections.

3.2.1.2.1 Air Stream Transfer Rate and Pressure

The HEPA filter skid assembly shall be designed for a nominal 4,800 acfm, +10 to 0 percent, or equivalent total mass flow of saturated air over its entire range of operating conditions. The nominal static pressure, as seen at the HEPA filter outlet flange, is provided in Table 3-2. This value shall be used to determine system design pressures.

3.2.1.2.2 Air Stream Particulate Removal Performance

The HEPA Filter System shall remove particulate from the incoming air stream in accordance with ASME AG-1.

3.2.1.2.3 Intermittent Pressure Requirement

The piping for the Condensate Collection System transfer pump discharge shall be designed to withstand a maximum pump shutoff head as determined by the Seller. The condensate collection piping in this portion of the skid shall be evaluated for this intermittent condition in accordance with the ASME B31.3 piping code for "Normal Fluid Service." Piping connecting the filtration train housings and the collection reservoir shall be designed for the static pressure in the trains.

3.2.2 Physical Characteristics

The HEPA filter skid assembly with associated supports, piping, instruments, and electrical infrastructure will be placed onto a concrete foundation (see Foundation #13 on Drawing H-14-106796). The width shall allow for at least a 1-ft clearance on each side of the skid. The length shall be minimized to the extent practical. The HEPA filter skid assembly shall not exceed 3,000 psf load limit for assembly footprint.

3.2.3 Reliability

All HEPA filter skid assembly equipment including, but not limited to, the piping, pumps and motors, casings, shafts, valves, bearings, seals, and fasteners shall have a minimum service life of 2 years and a design life of 5 years. Documentation to demonstrate this requirement is met shall be collected and prepared by the Seller. Documentation shall be submitted to and verified by the Buyer before fabrication.

3.2.4 Maintainability

Maintainability characteristics that affect the design (lubrication, parts replacement and repair, spares, modular construction, test points, etc.), including, but not limited to, shall include the following:

1. Maintenance and Repair Cycles. The Seller shall specify frequency or availability requirements for maintenance of the component (e.g., scheduled maintenance every 40-operating hours).

2. Service and Access. The Seller shall specify requirements for ease of service (access openings/spacing, self-test capability, inspection windows, test fixtures, sealed bearings, etc.). Include requirements for service (remove and replace only, bench repair, special tools, remote handling/maintenance, etc.), and for capability of the item to be drained, connected, discharged, etc. Adequate working space shall be provided around all electrical equipment in accordance with the NEC® (NFPA 70). Critical equipment, instrumentation, or high maintenance items shall be accessible for ease of inspection and removal and replacement. Adequate space and accessibility shall be provided for removal and replacement of individual instruments or equipment without removal of adjacent equipment. Valves, test points or ports, and calibration adjustments shall be accessible.

3. Decontamination. All components in contact with processing fluids must be capable of being decontaminated and ultimately decommissioned, dismantled, and disposed of as radioactive waste. All material and equipment shall be fabricated and installed to facilitate routine removal, cleaning, or decontamination. Attention shall be paid to eliminating crevices and obtaining smooth weldments through the entire process flow stream.

4. Spares and Spare Parts. The Seller shall specify identification of recommended spares and spare parts and provide a listing to the Buyer.

5. Special Tools. The system shall facilitate maintenance with commercially available tools, wherever possible. The Seller shall furnish all special tools unique to the Seller's equipment that are necessary for installation, startup, operation, maintenance, and adjustment of the equipment and accessories

furnished by the Seller. The special tools become the property of the Buyer. If supplied, the Seller shall also provide a list of all special tools furnished, identifying the function of each tool and the specific item(s) for which the tool is used. The Seller shall also indicate if the tool is required for assembly, disassembly, installation, startup, operation, maintenance, or adjustment. The Seller shall provide detailed drawings or procurement information for the special tools.

6. Maintenance Considerations. The design of the assembled system shall follow a minimum maintenance philosophy (i.e., selection of components should take into consideration potential maintenance in addition to other considerations). Components shall be designed to allow handling and maintenance by personnel outfitted in protective clothing and gloves. Components shall also be designed so they can be removed and replaced in a modular manner.

7. Lock and Tag. Both mechanical and electrical systems shall be designed to be locked out and tagged out during maintenance actions. Where applicable, the Seller shall identify on fabrication drawings those components which have a built-in feature that support the application of a lock and tag.

8. Standardization. To the extent practical, common components shall be used to minimize spare parts, tools, and procedures. Fastener size, drive size and type shall also be standardized to effect maintenance with a minimum number of tools.

3.2.5 Environment

The HEPA filter skid assembly shall be designed to operate and be stored in the climatic and environmental conditions listed in Table 3-3.

Table 3-3: Environmental Conditions

Parameter	Environmental Condition
Ambient air temperature range[a]	-25 to 115 °F with a maximum 24-h differential of 52 °F[b]
Relative humidity range[a]	Near 0 to 100%
Maximum precipitation[a]	2.5 in. in a 6-h period
Sand and dust concentrations[a]	1.10×10^{-5} lbm/ft^3 with a size of 150 µm or less
Solar radiation[a]	900 langleys, distributed over a 12-h period
Heating and cooling basis wind factors other than those noted above	Derive from ASHRAE Fundamentals Handbook[c] for the Hanford Site

[a]HNF-SD-GN-ER-501, *Natural Phenomena Hazards, Hanford Site, Washington*, Revision 1B, Westinghouse Hanford Company, Richland, Washington.

[b]The system is not expected to operate below 0 °F, only provide freeze protection below 0 °F.

[c]*2001 ASHRAE Handbook – Fundamentals*, American Society of Heating, Refrigerating, and Air Conditioning Engineers, Atlanta, Georgia.

3.2.6 Transportability and Storage

The assembled system shall be designed to facilitate relocation to the final destination at the Hanford Site.

1. The assembled system shall be capable of being moved by crane or truck without modifications.

2. Lift points shall be provided for the lifting and handling of equipment and components.

3. The assembled system packaging shall support the equipment so it can withstand a 0.75-gravity (forward), hard-braking stop, and a rearward acceleration of 0.25 gravity, as well as, shock and vibration loads associated with transportation.

4. The assembled system and any accessories shall be sized for transport using local roadways and freeways (i.e., less than 12 ft wide, 53 ft long, and

13-1/2 ft tall, as shipped). The height limit may be relaxed based on design requirements, but must not exceed limits allowed for road transportation.

5. The assembled system shall be stored and operated outside of an extended period of time, five years maximum, and will be exposed to the environmental conditions found at the Hanford Site as identified in Section 3.2.5.

3.2.7 Safety

The equipment shall be designed to maintain the safety of operators and the general public. The Seller shall provide all necessary guards, lockouts, and other safety equipment for safe operation as required under 29 CFR 1910.

3.3 DESIGN AND CONSTRUCTION

3.3.1 Parts/Materials/Processes

It is the Seller's responsibility to develop a complete data sheet for the components identified in the Seller's design drawings. Completed data sheets, as well as vendor information (catalog cut sheets, vendor drawings, etc.) for components shall be developed by the Seller. The Seller shall provide data sheets and catalog cut sheets for all major components. The data sheet format shall be in conformance with the Buyer supplied forms contained in Appendix C (electronic forms can be provided by the Buyer).

Component substitutions may be proposed by the Seller on the fabrication drawings for approval by the Buyer. Substitutions will be considered if a component is no longer available, or the proposed substitution improves the design, reduces cost, or improves the production schedule.

Only new parts and materials shall be used for the assembly. Used, surplus, or reconditioned parts and materials are prohibited.

All components shall be installed in accordance with manufacturer's instructions. If conflicts arise with the specified components or component interfaces (line sizes, fittings, electrical requirements, etc.) during design and fabrication, they shall be brought to the attention of the Buyer for resolution.

No aluminum or "yellow" metals are to be used. No beryllium shall be present. No asbestos containing materials shall be used. Exposed polymer materials shall be constructed of anti-static materials.

Lead shall not be used unless the lead is fully encapsulated and identified with a permanent tag. Polychlorinated biphenyls shall not be used in the design of the assembled system.

3.3.1.1 Components

All equipment and components shall have an equipment identification number (EIN) provided by the Buyer, consistent with Sketch DBVS-SK-P102. The air stream handling components shall be configured on the support skid as indicated on the P&ID.

The HEPA Filter System components shall be fabricated and/or assembled to meet the latest requirements of ASME N509, ASME N510, and ASME AG-1. Where conflicts occur, ASME AG-1 takes precedence.

3.3.1.1.1 High-Efficiency Particulate Air Filter Housings

1. The filter housings shall be designed, fabricated, and/or assembled to meet the latest requirements of ASME AG-1 (Section HA).

2. These filter housings shall be a Flanders BF Series™, 2 x 2, Type 1, right and left access for a side-by-side design. The housings shall be fabricated from 11, 12, or 14 gauge (as required), ASTM A 240/A 240M, Type 300-series stainless steel with a 2-B mill finish. All welded components shall be fabricated from Type 300-series stainless steel, Grade L.

3. Housing hardware material shall meet the requirements for Type 300-series stainless steel, excluding the access door knobs which shall be cast aluminum.

4. The filter housings shall not exceed a nominal depth of 25 in. in the direction of airflow.

5. All "pressure retaining" weld joints and seams shall be 100 percent continuously welded. Weld joints and seams shall be wire brushed or buffed after final nondestructive examination (NDE)/inspection as required to remove heat discoloration, oxidation, all burrs, and sharp edges.

6. Each housing shall be insulated to a nominal thickness of 2 in. using 8-lb/ft^3 mineral wool insulation (the Seller shall verify insulation thickness by calculation). The insulation shall cover the sides, top, bottom, and access doors for the housings and shall fill, to the maximum extent practical, the external housing voids. The insulation shall be permanently sealed into the housing by the welded installation of 11 or 12 gauge, ASTM A 240/A 240M, Type 300-series stainless-steel false panels. All welded components shall be fabricated from Type 300-series stainless steel, Grade L. Insulation not required between housings if the sections are stacked.

7. Each housing shall each accommodate four Flanders GG-F Fluid Seal™ (24 in. by 24 in. by 11-1/2 in.), Type B (Nuclear Grade) HEPA elements. Filter-to-housing seal shall be effected by means of a "knife-edge" frame in the housing that ends with a continuous perimeter channel on the face of a filter that has been filled with a viscous, nondrying fluid. The filters shall not require any special attachments or devices to function correctly within the housings.

8. Each filter housing shall be equipped with two static pressure ports for connection to the instrument. The ports shall be located upstream and downstream of the filters. The port fittings shall be 1/4-in. Schedule 40, seamless, stainless-steel pipe meeting the requirements of ASTM A 312/A 312M, Type 300-series stainless steel. All welded components shall be fabricated from Type 300-series stainless steel, Grade L. The ports shall extend a minimum of 1 in. beyond the insulation false panel and threaded to accept a 1/4-in. female national pipe thread (FNPT) fitting.

9. Each filter housing shall be equipped with a temperature port. The port will be located directly in front of the HEPA filter. The port fitting shall be 1-in. Schedule 40, seamless, stainless-steel pipe meeting the requirements of ASTM A 312/A 312M, Type 300-series stainless steel. All welded components shall be fabricated from Type 300-series stainless steel,

Grade L. The port shall extend a minimum of 1 in. beyond the insulation false panel and threaded to accept a 1-in. FNPT fitting.

10. Each filter housing shall be equipped with a port for installation of a level switch. The port will be located to allow the insertion of the instrument at the lowest point within the housing and near the drain. The port fitting shall be a 1.5-in. Schedule 40, seamless, stainless-steel pipe meeting the requirements of ASTM A 312/A 312M, Type 300-series stainless steel. All welded components shall be fabricated from Type 300-series stainless steel, Grade L. The port shall be threaded to accept a 1.5-in. FNPT fitting.

11. Each filter housing shall be equipped with a floor drain centered at the bottom of the housing. The drain shall be 1-in. Schedule 40, seamless, stainless-steel pipe meeting the requirements of ASTM A 312/A 312M, Type 300-series stainless steel. All welded components shall be fabricated from Type 300-series stainless steel, Grade L.

12. A toggle or over-center ("Davis-Lok") type filter clamping assembly or locking tray shall be used to secure the filters in the housing. The clamping assembly shall apply a sealing force that is even and uniform across the top and bottom of the filter. The clamping assembly or locking tray shall be replaceable.

13. Each housing shall be equipped with an access port for the filter.

14. The filter clamping assembly or locking tray shall be accessible from the access port and shall be operable through any containment change-out bags.

15. Each housing shall be equipped with filter removal rods to draw the filters to the change-out position. The removal rods shall be operated from inside the change-out bag, and the filters shall be removed by pulling against the bottom of the filter frame. There shall be no penetration through the housing for operation of the removal rod. All change-out operations shall be within the bag so there is a barrier between the worker and the filter at all times.

16. The access port shall be equipped with a containment change-out bag adapter. The adapter shall be welded to the housing. The welded joints/seams used to fabricate and secure the change-out adapter to the housing shall be considered "pressure retaining" joints and shall be 100 percent continuously welded. The adapter shall be hemmed or rolled on its outer edge and include two continuous ribs. The ribs are required to hold the containment bag elastic cord and/or safety strap during filter bag-in/bag-out procedures.

17. A containment change-out bag shall be provided for each access port that meets the air stream conditions of Section 3.2.1.1. The bags shall be nominal 5 mils thick, translucent, and have elastic O-ring (compatible with the maximum bag temperature) hemmed into the open-end of the bag.

18. A nylon safety strap shall be provided with the bag to prevent the bag from slipping off of the access port bag adapter during filter bag-in/bag-out procedures.

19. A nylon-cinching strap shall also be provided with the bag to "tie-off" the bags slack when the housing door is installed and the unit is operational.

20. The access port shall include a removable door assembly that encloses the access port, the bag adapter, and the bag with its accessories.

21. The door shall include a minimum of four tie-down latches. The latches shall be designed in such a manner as not to impede the bag-in/bag-out process.

22. The door shall include a continuous rubber lip on its perimeter that affects a positive "compression" seal between the door and the housing.

23. The door shall interface with the housing in such a manner that the door cannot be closed or installed until the filter is correctly installed in the housing and the clamping assembly or locking tray is fully ended.

3.3.1.1.2 Test Sections

1. The test section housings shall be fabricated and/or assembled to meet the latest requirements of ASME AG-1 (Section HA).

2. The inlet test section shall be a Flanders™ test "inlet" section, type 1 arrangement for a BF Series™, 2 x 2, type 1, right and left access for a side-by-side design. One inlet test section shall be located upstream of the first bank of HEPA filters.

3. The combination test section shall be a Flanders™ test "combination" section, type 1 arrangement for a BF Series™, 2 x 2, type 1, right-hand access for a top and bottom stacked design or right and left access for a side-by-side design. One combination test section shall be located between the two banks of HEPA filters.

4. The outlet test section shall be a Flanders™ test "outlet" section, type 1 arrangement for a BF Series™, 2 x 2, type 1, right and left access for a side-by-side design. One outlet test section shall be located downstream of the second bank of HEPA filters.

5. The test sections shall be fabricated from 11, 12, or 14 gauge (as required), ASTM A 240/A 240M, Type 300-series stainless steel with a 2-B mill finish. All welded components shall be fabricated from Type 300-series stainless steel, Grade L.

6. The test sections shall not exceed a nominal depth of 28 in. in the direction of airflow.

7. Test section hardware material shall meet the requirements for Type 300-series stainless steel.

8. The differential pressure drop across each of the test sections shall not exceed 0.75" w.g. at the rated capacity of the HEPA filter assembly.

9. All "pressure retaining" weld joints and seams shall be 100 percent continuously welded. Weld joints and seams shall be wire brushed or

buffed after final NDE/inspection as required to remove heat discoloration, oxidation, all burrs, and sharp edges.

10. The test sections shall be insulated to a nominal thickness of 2 in. using 8-lb/ft^3 mineral wool insulation. The insulation shall cover the sides, top, and bottom of the test sections and shall fill, to the maximum extent practical, the external housing voids. The insulation shall be permanently sealed into the housings by the welded installation of 11 or 12 gauge, ASTM A 240/A 240M, Type 300-series stainless-steel false panels. All welded components shall be fabricated from Type 300-series stainless steel, Grade L.

11. The test sections shall be constructed in such a manner to allow HEPA filter "in-place" testing in accordance with the requirements of ASME AG-1 (Article FC-5120) and ASME N510 (Section 10) outside the system using apparatus and devices which are supplied as an integral part of the test section. Ports shall be identified and specified by the Seller. Apparatus and devices shall include as a minimum:

    a. Inlet test section – challenge aerosol inlets, mixing apparatus (diffusers) and upstream sample outlets.

    b. Combination test section – downstream mixing apparatus (diffusers) and sample outlets for the upstream filters, plus challenge aerosol inlets, mixing apparatus (diffusers), and upstream sample outlets for the downstream filters.

    c. Downstream sample outlets – challenge aerosol inlets, mixing apparatus (diffusers) and upstream sample outlets.

    d. Apparatus and devices that make up the test sections shall meet the intent of the nonmandatory design guidelines of ASME AG-1 (Appendix HA-C) and ASME N509 (Appendix C).

    e. Apparatus and devices that make up the test sections shall be designed to allow qualification testing of the apparatus and devices in accordance with ASME AG-1 (Appendix HA-D) and ASME N510 (Section 9), as required.

12. The test sections shall be equipped with a floor drain centered at the bottom of the housing. The drain shall be 1-in. Schedule 40, seamless, stainless-steel pipe meeting the requirements of ASTM A 312/A 312M, Type 300-series stainless steel. All welded components shall be fabricated from Type 300-series stainless steel, Grade L.

13. The inlet and combination test section shall each be equipped with a temperature port. The port will be located so that the installed instrument does not impact the required air flow pattern in each section. The port fitting shall be 1-in. Schedule 40, seamless, stainless-steel pipe meeting the requirements of ASTM A 312/A 312M, Type 300-series stainless steel. All welded components shall be fabricated from Type 300-series stainless steel, Grade L. The port shall extend a minimum of 1 in. beyond the insulation false panel and threaded to accept a 1-in. FNPT fitting.

14. The inlet test sections shall be equipped with a coupling (size and type determined by the Seller) for the vent line from the condensate collection system.

3.3.1.1.3 Transition Plenum Sections

1. The HEPA filter skid assembly will require one filter housing inlet transition plenum section and one filter housing outlet transition plenum section for each filter train. The plenum housing sections shall be fabricated and/or assembled to meet the latest requirements of ASME AG-1 (Section HA) and to support 150 percent of their own finished weight when mounted to the housing/test section.

2. The transition sections shall be fabricated from 10, 11, or 12 gauge (as required), ASTM A 240/A 240M, Type 300-series stainless steel with a 2-B mill finish. All welded components shall be fabricated from Type 300-series stainless steel, Grade L. The flanges shall be, at a minimum, 150-lb raised-face flanges and meet the requirements of ASTM A 182/A 182M.

3. The transition sections shall be all welded construction and fabricated in accordance with the housing/test section manufacturer's standard fabrication processes.

4. All "pressure retaining" weld joints and seams shall be 100 percent continuously welded. Weld joints and seams shall be wire brushed or buffed after final NDE/inspection as required to remove heat discoloration, oxidation, all burrs, and sharp edges.

5. The transition sections shall be insulated to a nominal thickness of 2 in. using 8-lb/ft^3 mineral wool insulation. The insulation shall cover the sides, top, and bottom of the transition sections. The insulation shall be permanently sealed into the transition by the welded installation of 11 or 12 gauge, ASTM A 240/A 240M, Type 300-series stainless-steel false panels. All welded components shall be fabricated from Type 300-series stainless steel, Grade L.

3.3.1.1.4 Inlet Spool Section

1. The skid assembly will require one inlet spool section. The inlet spool section shall be fabricated and/or assembled to meet the latest requirements of ASME AG-1 (Section SA) and to support 150 percent of its own weight when mounted to the HEPA filter housings.

2. The inlet spool section shall be fabricated from a minimum of 16-in. Schedule 10, straight seam welded stainless-steel pipe meeting the requirements of ASTM A 312/A 312M, Type 300-series stainless steel. The specific pipe schedule shall be based on structural analysis for assembly. All welded components shall be fabricated from Type 300-series stainless steel, Grade L. The flanges shall be, at a minimum, 150-lb raised-face flanges and meet the requirements of ASTM A 182/A 182M.

3. All "pressure retaining" weld joints and seams shall be 100 percent continuously welded. Weld joints and seams shall be wire brushed or buffed after final NDE/inspection as required to remove heat discoloration, oxidation, all burrs, and sharp edges.

4. The inlet spool shall be equipped with one static pressure port. The port shall be located on the top of the spool section. The port fitting shall be 1/4-in. Schedule 40, seamless, stainless-steel pipe meeting the requirements of ASTM A 312/A 312M, Type 300-series stainless steel. All welded components shall be fabricated from Type 300-series stainless

steel, Grade L. The port length shall be long enough to allow for insulation to be added to the inlet spool section at time of HEPA filter skid assembly installation and be threaded to accept a 1/4-in. FNPT fitting.

3.3.1.1.5 Valves and Installation

1. Component data sheets for the air-operated and manual valves are to be provided for as listed in the Bidder's Drawing and Data Commitments sheet (Appendix D). Valves shall be of a compatible material with respect to the attached piping.

2. All valves shall be pressure tested for tightness of shell and seat as follows:

   a. Shell Test. No leakage in the valve pressure boundary above limitations stated in MSS SP-72 and MSS SP-82 is permitted.

   b. Seat Test. No leakage past valve resilient seats above limitations stated in ASME AG-1, ANSI FCI 70-2 (for Class VI), or MSS SP-72 and MSS SP-82, as applicable, is permitted.

3. Valve leak test reports shall be prepared and submitted to the Buyer for review and approval.

4. All valves shall be installed per manufacturer's instructions.

5. Valves used to isolate the condensate collection system lines shall accessible for operation and maintenance.

6. Seller shall review manufacturer's supplied information for unique installation requirements and request written clarification if installation requirements do not match the design.

7. Butterfly valves shall be used to isolate the inlet of HEPA filter skid assembly. Isolation valves shall meet the design requirements of ASME B31.1 and MSS SP-67 (use of ASME B31.1 as allowed per ASME AG-1, Section DA). Isolation valves shall be Keystone™, Bray® Series 20 or 40 (with MSS SP-67 body and seal testing) or approved equivalent, with Type 316 stainless-steel body, disc, and stem. Stem packing shall be

Teflon® and the resilient seat shall be Buna N®. The stem bushing shall be RFTF/Fiberglass Epoxy. Valves shall meet the requirements of ASME N509 for leakage Class I and shall be individually tested in accordance with ASME N509.

8. A 16-in. (minimum) valve shall be located before the inlet to the HEPA filter housing transition section. Reach handles shall be provided if easy access to the valves is not attainable.

9. All instrumentation shall have the capability to isolate the pressure instruments from the plenum atmosphere to allow for calibration testing.

3.3.1.1.6 Expansion Joint

An expansion joint shall be provided at a location upstream of the HEPA filter skid assembly inlet header.

3.3.1.1.7 High-Efficiency Particulate Air Filter Skid Assembly Base

1. The HEPA filter skid assembly will require a structural base that supports the system components as well as any required electrical and instrumentation and control components. A single base shall be provided for a dual vertically stacked HEPA filter skid assembly design.

2. The skid shall be fabricated from ASTM A 36/A 36M carbon steel or a Buyer-approved substitution.

3. The HEPA filter base shall be all welded construction. Joints and seams shall be wire brushed or buffed after final NDE/inspection as required to remove heat discoloration, oxidation, all burrs, and sharp edges.

4. The skid will be designed to be portable allowing the system to be moved by crane and truck. Lift points shall be provided for lifting and handling rigging, and attachment of load binders (transportation). Any spreader bar or special lifting device shall be provided and load tested in accordance with DOE/RL-92-36. The lift points shall be designed to lift the gross weight of the unit. The lifting points and the gross weight of the unit shall be

identified on the skid. The skid shall identify the approximate center of gravity of the assembly for lifting and handling.

3.3.1.1.8 Condensate Drain and Collection System

1. The system shall drain and capture any condensate located in the HEPA filter skid assembly housings and then pump liquid to the Buyer waste collection tanks. The drain system will need to operate effectively at the maximum negative pressure capacity of the exhaust system (i.e., valves isolating drain lines shall be rated to the pressure differential to prevent leakage and connecting piping rated for expected static pressure). Individual lines from each drainage point in the system shall be sloped a minimum of 1/8 in. per foot to the condensate collection reservoir.

2. The Condensate Drain Collection System pump shall be capable of pumping a minimum of 1 gal/min through a minimum 120 ft of head loss and elevation changes through equivalent 1-in. Schedule 40 piping. The collection system shall include a manual sight glass, pump local controls, and level monitoring controls.

3. The collection system shall have penetrations for a 1-in. IPS valved fill port, 1-in. IPS valve for drainage of the primary via pump to the Buyer's storage tanks, and 1-in. IPS drains to atmosphere (total drainage) for the both the primary and secondary containment. The collection system design shall include a vent to release air pressure from the headspace to accommodate filling and level measurement of the collection system. The vents shall be routed from the top of the collection system back to a vent coupling located on the inlet test section of each filter train. Vent size and connection type determined by the Seller. Secondary containment shall be provided for the collection system. Both primary and secondary containment will have penetrations compatible with the liquid level instrumentation provided by the Seller that meets the requirements in Section 3.3.1.1.13. The collection system assembly shall be fabricated from ASTM A 240/A 240M, Type 304L, using all welded and flanged end construction.

4. The collection system piping materials and construction shall conform to the requirements of ASME B31.3, Chapter III. The piping shall be ASTM A 312/A 312M, Grade TP, Type 304L and fittings shall be

ASTM A 403/A 403M, Class WP, Type 304L. All piping shall be pressure tested in accordance with ASME B31.3 as an assembly with the filter housing.

5. The drain lines and collection system shall be heat traced, insulated, and weather protected to ensure freezing cannot occur. The inspection of heat tracing shall be performed before insulation is applied.

6. The drain lines shall be protected by grating, or similar, from personnel standing on the drain lines and damaging the piping, heat trace, or insulation.

7. The collection system reservoir shall have a minimum working capacity of 30 gallons. The Seller shall take into consideration sloping requirements, physical constraints, and requirements for the pump and installed instrumentation for determining actual size and configuration.

3.3.1.1.9 Thermal Insulation Material Requirements

1. The collection system shall be insulated with ultra-violet resistant, closed cell insulation to resist retention of, and degradation by, water. Closed-cell insulation shall be painted in accordance with the manufacturer's written instructions.

2. The insulation material shall have a minimum "R" value of 6 and shall meet the requirements of the Midwest Insulation Contractors Association for materials, design, and application, and shall not interfere with the operating, testing, maintenance, and service of any components or systems. Insulation shall be removable and re-installable from components requiring periodic maintenance and inspection. Insulation material shall be free of halogenated hydrocarbons.

3. No Certified Material Test Reports (CMTR) are required for insulating materials or accessories. Copies of Certificates of Conformance (CoC) shall be provided.

3.3.1.1.10 Skid Assembly Instrumentation and Control

All of the skid assembly instrumentation shall comply with the ASME AG-1 (Section IA) and the NEC® (NFPA 70).

All instruments, temperature sensors, and velocity probes shall be capable of 2 percent accuracy (of full scale) or better.

3.3.1.1.11 Pressure Monitoring

The skid assembly shall be equipped with a differential pressure system that measures filter performance. The differential pressure indicating instruments shall measure the differential pressure across the first HEPA filter and the second HEPA filter. The skid assembly shall also be equipped with a pressure indicating instrument that measures the pressure at the inlet plenum.

3.3.1.1.12 Temperature Monitoring

Air stream temperature monitoring system shall consist of 100 ohm platinum resistance temperature detector (RTD) probes (see Sketch DBVS-SK-P102, Appendix A, for number and location). The RTDs shall be installed in 12-in.-deep thermowells.

3.3.1.1.13 Liquid Monitoring

The Condensate Drain Primary Collection System shall have a level instrument with local alarm for high or low levels. The liquid level alarm(s) will be determined during design based on the configuration and volume of the Seller-designed condensate collection reservoir. The secondary containment shall have a level instrument set to detect the presence of liquid in the secondary containment volume.

3.3.1.1.14 Freeze Protection

Freeze protection shall be installed on each of the condensate lines and on the collection system reservoir. Heat trace shall be separated in at least two sections and shall provide indication that the heat trace is operating correctly. The heat-trace system shall be thermostatically controlled to energize when the

temperature drops below freezing. Heat-trace inspection and testing shall be performed before addition of the insulation.

3.3.1.2 Piping – Design

Piping systems for the system and interconnecting piping for the Condensate Collection, Filtered Water and Compressed Air Systems shall be designed, fabricated, inspected, examined, and tested in accordance with the ASME B31.3 piping code for "Normal Fluid Service." Piping systems include all piping components and supports. The minimum design pressure for the HEPA filter skid piping and components, including instrumentation shall be determined by the Seller for the design flow rate. The design temperature shall be determined by the Seller for the design flow rate taking into account insulation, air stream temperature, and environmental conditions.

3.3.1.3 Piping – Line Routing

The proposed installation layouts shall meet the requirements of the ASME B31.3 piping code for "Normal Fluid Service."

The Seller shall provide detailed fabrication drawings of the required piping, including welding details, for review and approval.

3.3.1.4 Piping – Vents and Drains

High-point vent(s) shall be installed as required for venting air in preparation for testing or operation. Low-point drain(s) shall be installed as required for draining the system before maintenance or lay-up. Eliminate low spots to minimize freestanding liquids in the piping. Gravity draining of the piping system is preferred. The Seller shall provide basis for draining method if other than gravity draining.

3.3.1.5 Piping – Pipe and Equipment Supports

Piping attached to equipment shall be installed with fasteners made finger-tight until alignment is achieved, at which time all fasteners shall be tightened. Tightening torque shall be that which is recommended by the ASME B31.3 piping code for "Normal Fluid Service," or gasket manufacturer recommended torque

values for the gasket system used. Flange assembly and bolting shall be performed in accordance with ASME PCC-1. Piping support bolting shall be installed and torqued in accordance with manufacturer's recommendations. Inspection documentation shall be provided as evidence of proper bolt torquing.

Piping and equipment shall be supported by pipe supports attached to the skid using structural shapes or strut. The Seller shall develop detailed fabrication drawings of the required piping and equipment supports, including welding details. Location of frames members and supports shall be based on analyses performed by the Seller (see Section 3.3.11.1 for required analyses).

All piping supports shall conform to the ASME B31.3 piping code for "Normal Fluid Service," with additional support at valves, elbows, tees, and equipment as required. Additional supports shall be provided, if necessary, to comply with the requirements stated in the design loads section (Section 3.3.11.1).

Piping supports shall be capable of supporting the piping in all conditions of operation. The supports shall allow free expansion and contraction of the piping and prevent excessive stress resulting from transferred weight being introduced into the piping of connected equipment.

The Seller shall level-plumb piping using shims, etc., to support the pipe and to avoid forced piping deflections at support points. The pipe supports may be stainless or painted carbon steel.

The Seller shall provide detailed fabrication drawings of the required piping supports, including welding details, for review and approval.

3.3.1.6 Piping Materials

Piping components shall be listed components in accordance with ASME B31.3 (Table 326.1).

The Seller shall select materials based on acceptable lifetime performance of materials subjected to the chemical and radiation exposures described in this specification. All parts and materials shall be new. No aluminum or "yellow" metals are to be used. No beryllium shall be present. Exposed polymer materials shall be constructed of anti-static materials. No lead shall be used in

the design unless it is fully encapsulated and identified with a permanent tag. No equipment shall use or require the use of polychlorinated biphenyls. Material selection shall be identified in the Seller documents to the Buyer.

Material type and grade shall be clearly identified on the Bill of Materials. CMTRs are required for all materials and components coming in contact with the waste. Pipe flange bolting and pipe support materials for the waste fluid piping shall also have CMTRs. The Seller shall identify any materials that do not have CMTRs for review and approval. CMTRs are not required for electrical materials, components, or accessories, insulating materials, gaskets, or seals. Copies of CoCs shall be provided for all materials not having CMTRs. CMTRs are required for all materials normally.

The Seller shall provide CMTRs and CoCs for review.

3.3.1.6.1 Screwed Pipe Fittings

Screwed pipe fittings shall be in accordance with ASME B16.11. Screwed fittings are acceptable for instrumentation taps, drains, and vents, and the filter water and compressed air systems; but shall be avoided for main process pipe runs. Close or butt nipples are not permitted. Threaded joints shall be joined using low chloride Loctite® PST.

3.3.1.6.2 Flanged Pipe Fittings

Flanges for pipe greater than 1/2 in. shall be standard 150-lb or 300-lb raised-face flanges in accordance with ASME B16.5 and shall be made from the same type of steel as the pipe in which it will be welded. Flange assembly and bolting shall be performed in accordance with ASME PCC-1.

3.3.1.6.3 Socket Welded Pipe Fittings

Socket welded pipe fittings shall be in accordance with ASME B16.11. Socket welds shall be avoided for main pipe runs.

3.3.1.6.4 Butt-Welded Fittings

Butt-welded fittings shall be in accordance with ASME B16.9.

3.3.1.6.5 Stainless-Steel Pipe Materials

Stainless-steel pipe shall be ASTM A 312/A 312M, Schedule 40 or 80 (as required), seamless, 300-series, Type 304, 304L, 316, or 316L. Stainless-steel pipe flanges and flanged, socket weld, or screwed fittings shall be ASTM A 182/A 182M, Grade F, 300-series, Type 304, 304L, 316, or 316L. Stainless-steel butt-welded fittings shall be ASTM A 403/A 403M, Grade WP-S, 300-series, Type 304, 304L, 316, or 316L.

1. All grades of stainless steel may be substituted for one another depending on availability and providing the substitution still complies with the above specifications and has prior approval of the Buyer.

2. Piping shall be a listed component as stated in ASME B31.3 (Table 326.1).

3.3.1.6.6 Carbon-Steel Pipe Materials

Carbon-steel pipe having a diameter of 1-1/2 in. and smaller shall be ASTM A 106, Grade B, seamless. Carbon-steel pipe having a diameter of 2 in. and greater shall be ASTM A 53/A 53M, Type S, Grade B. Carbon-steel pipe flanges and flanged, socket weld, or screwed fittings shall be ASTM A 105/A 105M. Material for butt-welded fittings shall be ASTM A 234/A 234M, Grade A WPB. Piping shall be a listed component as stated in ASME B31.3 (Table 326.1).

3.3.1.6.7 Stainless-Steel Tubing

All stainless-steel tubing shall be seamless and shall meet the chemical and physical characteristics given in ASTM A 269. Tubing shall be a listed component as stated in ASME B31.3.

3.3.1.6.8 Stainless-Steel Tubing Fittings

Fittings for instrument air tubing may be Swagelok® compression fittings or approved equivalent, stainless steel, 300-series, per ASTM A 276 or ASTM A 182/A 182M. Copies of CoCs shall be provided.

3.3.1.6.9 Steel Forgings and Wrought Piping Fittings

All forgings, including flanges, and wrought piping fittings shall be listed components as stated in ASME B31.3 (Table 326.1), and shall meet the requirements of ASTM A 182/A 182M. All stainless-steel forgings and wrought piping fittings used in the fabrication shall be 300-series stainless steel and shall meet the requirements of ASTM A 403/A 403M, Grade WP-S.

3.3.1.6.10 Piping Gaskets/Seals

Pipe flange connections shall use PSI Inc., LineBacker® sealing gaskets with stainless steel as the retainer material and Viton® as the sealing element. LineBacker® Type F sealing gaskets shall be used for raised-face flanges and LineBacker® Type E sealing gaskets shall be used for flat-face flanges.

1. All elastomeric seals shall have radiation resistance for the radiation dose levels shown in this specification. Viton® is acceptable for the radiation levels specified.

2. No CMTRs are required for gaskets or seals, copies of CoCs shall be provided.

3.3.1.6.11 Weld Filler

The weld filler material shall be as specified in the approved Welding Procedure Specification, see Section 3.3.1.12.1.

3.3.1.6.12 Pipe Bends

Considerations for pipe bending are listed below:

1. Elbows and pipe bends not manufactured in accordance with listed standards in ASME B31.3 (Table 326.1) may be provided in accordance with ASME B31.3 (Paragraphs 304.2 and 332).

2. The material shall be suitable for the bending process.

3. The finish shall be free of cracks and substantially free from buckling.

4. The wall thickness after bending shall not be less than minimum wall thickness considering corrosion-erosion and mill under-run tolerance.

5. The minimum wall thickness of the bend intrados and extrados shall not be less than that calculated by equations listed in ASME B31.3 (Paragraph 304.2).

6. Bend flattening (the difference between maximum and minimum diameters at any cross section) shall not exceed 8 percent of nominal outside diameter for internal pressure. Metal shall not be removed to achieve these requirements.

7. The proposed assembly layouts shall meet the requirements of ASME B31.3.

3.3.1.7 Structural Materials

3.3.1.7.1 Weld Studs

Weld studs shall be metallurgically compatible with the material in which they are welded. Weld studs shall be made from stock material that meets the requirements of ASTM A 108 for mild carbon steel.

3.3.1.7.2 Carbon-Steel Plate and Sheet

All carbon-steel plate shall be general purpose, hot-rolled, low-carbon steel in accordance with ASTM A 36/A 36M. Carbon-steel sheet shall be provided in accordance with ASTM A 569.

3.3.1.7.3 Carbon-Steel Shapes

Carbon-steel structural shapes shall conform to the requirements of ASTM A 36/A 36M.

3.3.1.7.4 Carbon-Steel Bars and Rods

Carbon-steel bars and rods shall conform to ASTM A 108 with a minimum yield of 36,000 psi and maximum carbon content 0.35 percent.

3.3.1.7.5 Carbon-Steel Structural Rectangular Tube

Structural carbon-steel, rectangular tubing shall conform to the requirements of ASTM A 500, Grade B.

3.3.1.7.6 Stainless-Steel Sheet and Plate

Stainless-steel sheet shall meet the chemical and physical requirements of ASTM A 240/A 240M and ASTM A 480/A 480M. Stainless-steel plate shall meet the chemical and physical requirements of ASTM A 240/A 240M. The plate shall be provided with a cleaned finish.

3.3.1.7.7 Stainless-Steel Bars and Shapes

Parts made from stainless-steel bars and shapes shall be 300-series stainless steel. Stainless-steel bars and shapes shall meet the chemical and physical requirements of ASTM A 276.

3.3.1.8 Fasteners

The Seller shall select fasteners, when they are not specifically called out in this specification, using the following guidelines:

1. Carbon-steel bolts, nuts, and washers shall be used where mating parts are not stainless steel;

2. Stainless-steel bolts, nuts, and washers shall be used when the mating parts are stainless steel;

3. Pipe flange bolting components shall be listed in ASME B31.3 (Table 326.1) meeting the requirements of ASME B18.2.1 and ASME B18.2.2.

4. No fasteners shall be capable of vibrating loose under operating conditions. All such joints should be tack welded or have some equivalent means of ensuring they remain intact. Double-nutting is not an acceptable method of securing fasteners. Low chloride Loctite® threadlock may be used where applicable.

5. Low chloride anti-galling compound (e.g., Loctite® 8013 or 8009 or Neo-Lube®) shall be applied where stainless-steel bolts are used.

6. Stainless-steel bolts, cap screws, and washers shall be ASTM A 193/A 193M, Grade B8. Stainless-steel nuts shall be heavy hex nuts in accordance with ASTM A 194/A 194M, Grade 8. Stainless-steel washers shall be ASTM A 325, Type 3. Bolts and cap screws shall be grade marked.

7. General purpose carbon-steel bolts shall be ASTM A 307 or better, depending on strength and torque requirements. Carbon-steel nuts shall be ASTM A 563a. Bolts and cap screws shall be grade marked.

8. Structural bolts and cap screws shall be grade-marked and shall conform to ASTM A 325.

9. Copies of CMTRs shall be provided for all fasteners used for piping, pipe supports, or component support structures.

10. All graded fasteners shall conform to ASME B18.2.1, SAE J429, and ASTM A 354.

11. The Seller shall ensure that suspect or counterfeit fasteners and components are not used. Suspect fasteners can be identified by the following inspection methods:

    a. Head markings are marred, missing, or appear to have been altered;

    b. Threads show evidence of dressing or wear (threads should be of uniform color and finish);

    c. Head markings are inconsistent within a heat lot; and

    d. Head markings matching one of those identified on the U.S. Customs Service *Control of Suspect/Counterfeit Items* (see Appendix E).

3.3.1.9 Electrical – Design and Component Selection

3.3.1.9.1 General

The electrical installation shall meet the requirements of the NEC® (NFPA 70), as administered by the CH2M HILL Hanford Group, Inc. (CH2M HILL) electrical inspector.

Electrical equipment shall be listed or labeled by a Nationally Recognized Testing Laboratory (NRTL), such as Underwriters Laboratories, Inc. (UL), when a category exists. Note: NRTL's are listed on the Occupational Safety and Health Administration website at http://www.osha-slc.gov/dts/otpca/nrtl/index.html. It is the Seller's responsibility to ensure the listing is appropriate for the equipment specified.

It is the Seller's responsibility to obtain a listing or label for equipment without a listing or label by a NRTL.

When a listing or label can not be obtained, it is the Seller's responsibility to provide equipment critical characteristics, engineering data, and test data for the Buyers engineer to evaluate the acceptance of the product.

Any component, equipment, assembly, or system without a NRTL listing or label shall be subject to the approval of the CH2M HILL electrical inspector.

Where NEC® inspection is required, the Seller shall arrange for a CH2M HILL NEC® inspection to occur at the Seller's facility before shipping any assembly not covered in whole by a NRTL listing or label. The Seller shall perform modifications as required by the NEC® inspector before shipping.

Cabinets containing assembled control systems shall be designed, constructed, and listed or labeled to UL 508A, as applicable.

Design and operation of the assembled system shall meet the requirements of IEEE Std 141 and IEEE Std 519 for harmonics and flicker.

A permanent plaque or directory shall be installed at each feed and branch circuit disconnect location denoting all other services, feeder or branch circuits supplying the skid.

3.3.1.9.2 Electrical – Routing

The Seller shall select the routing of conduits between devices and the power and instrumentation and control enclosures. Care shall be taken to run conduit along the frame members where they can be mounted. Care shall be taken to select routes where conduit does not interfere with maintenance or replacement access to devices such as pumps or valves. Sketches of the routing locations shall be submitted to the Buyer for review and approval before proceeding with the work.

3.3.1.9.3 Electrical – Grounding

1. All power circuits shall include a ground wire that serves as the equipment grounding conductor, independent from the neutral wire. All powered devices shall be connected to the ground circuit wire. In addition, the skid frame, enclosures, raceways, covers, and enclosure doors shall be attached to the electrical ground. This may be accomplished by means of a screw, lock washer, and ring connector attachment at a spot where all paint and surface corrosion has been cleaned from the frame. The frame shall not be used as a current carrying conductor between devices.

2. Ground wires shall be green-insulated or bare-stranded copper wire.

3. Ground conductors shall be unspliced and continuous between termination points. Ground distribution shall be through terminal blocks or a ground bus. Wire nuts or butt splices are not acceptable.

4. The resistance between the main ground connection to the skid and any point in the ground circuit shall be less than 0.1 ohm as measured with a calibrated ohm meter.

5. The instrument ground circuit shall be separate and isolated from the power ground circuit to the extent allowed by the NEC® (NFPA 70). The

requirements for the instrument ground circuit installation are the same as the power ground requirements given above.

3.3.1.9.4 Electrical – Conduit Fill

The sum of the cross-sectional areas of all contained conductors shall not exceed the interior cross-sectional area of the raceway as calculated in the tables in Chapter 9 of the NEC® (NFPA 70) for raceway fill.

3.3.1.9.5 Electrical – Strain Relief

Strain relief shall be provided for all cables. The strain relief device shall comply with the following:

Strength - The device shall be capable of withstanding a 35 lb pull for one minute (from any direction) without allowing movement of the raceway or cable that could damage the conductor insulation or strain the conductor terminations.

3.3.1.9.6 Electrical – Conduit Support

Conduit shall be supported by attachment to the frame. The Seller shall provide rigid brackets or additional frame members for attaching conduit when frame members are not in a convenient location. Attachment shall be on regular intervals per NEC® (NFPA 70). Attachment shall be made using "U" clips which may be connected to the frame using either weld studs and nuts or bolts or approved NEC® method.

3.3.1.9.7 Electrical – Segregation of Control and Power Wiring

Power circuit wiring and control circuit signal wiring shall be run in separate conduits. Signal wiring that transmits alternating current signals shall be run in separate conduits from signal wiring that transmits direct current signals.

3.3.1.9.8 Electrical – Splicing

No splicing is allowed. The Seller shall provide junction boxes with terminal blocks for connection of devices such as valves and instrument sensors that are provided with pigtail leads.

3.3.1.9.9 Electrical – Enclosure Wiring

All enclosure wiring shall be routed, harnessed, appropriately laced, or in plastic wiring ducts. Where possible, all electrical penetrations into cabinets shall be from the bottom of the cabinet.

3.3.1.9.10 Electrical – Instrument Enclosures

Exposed live parts and contacts (greater than 50V) in enclosures shall be guarded to prevent unintentional contact during maintenance activities. Door-mounted equipment shall be constructed or shielded so that no live parts will be exposed to unintentional contact when the door is open.

3.3.1.9.11 Electrical – Enclosures

Unless otherwise noted, enclosures shall be rated NEMA 4.

3.3.1.9.12 Disconnect Switches

Two-pole and three-pole 480V ac, disconnect switches shall be supplied for loads in accordance with Drawing DBVS-SK-E103 and shall be located within sight of the respective loads. The disconnect switches shall be accessible to maintenance personnel. Disconnect switches for pumps shall be supplied with auxiliary contacts.

Disconnect switches shall be labeled with the load they serve. Incomplete load designators will be revised at the time of bid.

3.3.1.9.13 Transformer and Distribution Panel

A 480-120/240V ac single-phase transformer and associated distribution panel shall be installed on the skid assembly. The distribution panel and transformer may be combined as a single unit (e.g., Square D® Mini Power-Zone®). A detailed panel schedule listing breaker sizes and loads shall be located inside the panel door and provided as a one of the shop drawings.

Electrical power shall be distributed to all electrical components (except 3-phase pumps) from this distribution panel. Circuit breakers serving convenience

receptacles shall be protected by GFCI circuit breakers. GFPE breakers shall be used for heat-trace applications.

The panelboard will be used as a field distribution panel, and the transformer and panelboard shall be oversized by a minimum of 50 percent to accommodate this future load growth. Approximately 50 percent of the spare capacity shall be allocated to heat-trace loads (20-amp GFPE breakers shall be provided), and the remaining spare capacity shall be allocated to miscellaneous 120V loads (20-amp GFCI breakers shall be provided).

Suggested location for the distribution panel and transformer is shown on Drawing M108 (Appendix A).

3.3.1.9.14 Electric Motors

1. Electrical motors shall be designed and tested in accordance with NEMA MG-1.

2. Motors 1 hp and greater shall be 3 phase.

3. Electrical motors shall be rated at 480V ac, 3 phase, 60 Hz.

4. Electrical motors shall have a minimum service factor of 1.15.

5. Electrical motors shall have a minimum insulation class of F, as defined in NEMA MG-1.

6. The Seller shall provide the electrical motor specifications and data sheet to the Buyer for approval before final selection.

3.3.1.9.15 Heat-Trace Enclosure

A heat-trace enclosure shall be mounted on the side skid frame. The heat-trace enclosure shall provide power for the HEPA filter skid heat-trace lines.

3.3.1.9.16 Pushbutton Stations

A local pushbutton station shall be provided for the collection system transfer pump and shall be located on the support structure in a readily accessible location within sight of the pump. Pushbutton wiring shall be routed to a terminal box mounted on the skid frame. Schematics, with wire numbers, will be provided at the time of bid.

3.3.1.9.17 Receptacles

A 20-amp, receptacle, with gasketed weatherproof cover, shall be installed for general purpose use. Outdoor-rated convenience receptacles shall conform to NEMA 5-15R.

3.3.1.10 Electrical Materials

3.3.1.10.1 Conduit

1. Rigid galvanized steel (RGS) conduit or electrical metallic tubing shall be used in accordance with the NEC® (NFPA 70). The conduit shall be NRTL-approved, standard weight, 1/2 in. minimum size for control wiring and 3/4 in. minimum size for power wiring.

2. Liquid-tight flexible conduit shall be installed where flexible conduit is required or where connecting to vibrating loads. Liquid-tight flexible conduit shall be grounding type with a polyvinyl chloride jacket.

3. Conduit fittings shall be standard steel threaded, liquid-tight, type RGS fittings.

3.3.1.10.2 Wire and Cable

1. Conductors shall be stranded copper for all sizes of wire and cable unless specifically designated otherwise on the drawings. All wire and cable shall be NRTL-listed.

2. Wire insulation shall be THHN/THWN for all 600V conductors.

3. Minimum size of power conductors, 600V and below shall be No. 12 American wire gauge (AWG).

4. Conductors for control circuits shall be No. 14 AWG minimum, except that remote control circuits, signaling circuits, instrumentation, and power limited circuits may be sized smaller in accordance with the NEC® (NFPA 70).

5. Power wiring shall have color-coded insulation as indicated in Table 3-4.

Table 3-4: Wire Color Coding Requirements

Service, Feeder, or Branch Circuit	Conductor	Insulation Color	Insulation Type
480Y/277V ac, 3-phase systems	Phase A	Red	THWN/THHN or XHHW
	Phase B	Yellow	
	Phase C	Blue	
	Neutral	White or Gray	
	Equipment Grounding Conductor	Green (or bare)	
208Y/120V ac, 3-phase systems	Phase A	Black	
	Phase B	Purple	
	Phase C	Brown	
	Neutral	White or Gray	
	Equipment Grounding Conductor	Green (or bare)	
120/240V ac, 1-phase systems	Hot No. 1	Black	
	Hot No. 2	Brown	
	Neutral	White or Gray	
	Equipment Grounding Conductor	Green (or bare)	

6. Instrumentation cable shall be 600V, twisted shielded pair for analog signals, multiconductor for discrete signals, flame retardant, jacketed cable suitable for installation in wet or dry locations. Conductors shall be a

minimum of No. 18 AWG stranded, copper, in twisted pairs or triads with ethylene propylene insulation. Each pair or triad shall be shielded with a drain wire and metallic tape. Multipair cables shall have an individual shield and an overall shield of metallic tape and drain wire. Conductor color coding shall be black, white, and red if triad. Temperature rating shall be 90 °C. Each pair or triad shall be numbered for simplified termination.

7. Control and power multiconductor cable shall be 600V, flame resistant, jacketed cable suitable for wet or dry locations. Conductors shall be stranded copper with ethylene propylene insulation with a temperature rating of 90 °C.

3.3.1.10.3 Connectors

1. Connections to terminal blocks shall be the push-in type and shall be performed in accordance with the manufacturer's recommendations.

2. Flat-spade connectors shall not be permitted.

3.3.1.11 Drawings

The Seller shall provide all design drawings necessary for the HEPA filter skid assembly which includes, but is not limited to, drawing outlines, interface drawings, electrical wiring diagrams, control wiring diagrams, pipe support drawings, dimensional drawings, rigging sketches, and as-built drawings. Drawings shall be submitted to the Buyer for review and approval.

The Seller shall develop drawings that detail how the specified parts and materials will be assembled to meet the requirements of this specification. The drawing package shall include detail fabrication drawings, assembly drawings, arrangement drawings, general electrical drawings, electrical wiring and conduit schedule, and final as-built drawings. Drawings shall have a parts and materials list, as applicable, that clearly identifies quantity, manufacturer, the part or model number, material type and grade, electrical characteristics, size, and general descriptions. Drawings shall include dimensional layouts, dimensioned subassemblies, dimensioned component details (if not included on manufacturer's cut sheets), flow and electrical diagrams, material and fastener sizes, descriptions, weld symbols, and notes. The arrangement drawings shall

provide weight and center of gravity locations for the overall assembly as well as for major subassemblies (e.g., skid-mounted equipment within a larger assembly or large equipment moved and mounted as a unit).

The assembled system shall be designed to comply with the P&ID and include all components specified on the P&ID provided in Appendix A. If conflicts arise between the proposed design and the P&ID, they shall be brought to the attention of the Buyer for resolution. Any changes from the approved drawings shall be identified to the Buyer using the Request for Information form (Appendix F) for review of the change. The change shall then be controlled by the Seller to ensure the fabrication drawings are properly updated to incorporate the change. Final as-built drawings shall be prepared by the Seller at the conclusion of fabrication and testing.

Drawing size shall be per ANSI Y14.1. Parts and materials list shall include quantity, manufacturer, the part or model number, material type and grade, electrical characteristics, size, and general descriptions. All component parts shall refer to applicable material specifications, such as the military, ASME, ASTM, federal, or other specifications. As-built drawings shall be verified in accordance with QA Program Controls before submittal, and shall be in accordance with Buyer-supplied drawing procedures.

Drawings shall be prepared using AutoCAD® compatible drafting software. A copy of all as-built drawing files (one of which shall be an electronic AutoCAD® release 2000 or higher compatible file format) shall be included in the final drawing package. Drawings shall use the ROMANS AutoCAD® text font and the minimum text height shall be 1/8 in.

3.3.1.12 Material Control Process

The Seller shall develop a material control procedure to be used in the execution of the work. The material control procedure shall address procurement controls, segregation, and traceability of materials including weld filler rod from receipt at the shop through processing.

3.3.1.12.1 Exposure of Stainless Steel to Chloride Materials

Stainless steel shall not be in contact with materials containing more than 250-ppm chlorine. Low-chloride markers shall be used. Chlorinated solvents shall not be used to clean stainless steel.

3.3.1.12.2 Contact of Stainless and Carbon Steel

Contact between carbon steel and stainless steel shall be avoided during fabrication. Temporary carbon-steel clamps, supports, braces, and fixtures shall not come into direct contact with stainless-steel surfaces. Galvanized-steel clamps or fixtures may not be used on stainless-steel piping or components. Wire brushes shall be stainless steel. Grinding wheels and wire brushes shall be new or used previously on stainless steel only.

3.3.1.13 Welding Process

All welding performed by the filter housing manufacturer and/or the HEPA filter fabricator/manufacturer shall be in accordance with ASME N509 and ASME AG-1 and based on published consensus standards such as AWS D1.1/D1.1M, ANSI/AWS D1.3, AWS D1.6, AWS D9.1/D9.1M, and ASME B31.3.

Weld size and type shall be selected by the filter housing manufacturer and/or the HEPA filter fabricator/manufacturer based on applicable seismic, wind loading, and system pressure requirements established within this specification.

Welding of all pressure piping shall be performed in accordance with the ASME B31.3 piping code for "Normal Fluid Service," at a minimum.

Certified welders shall perform welding of all structural steel in accordance with AWS D1.1/D1.1M or AWS D1.6 (depending on material).

Welding Procedures, Procedure Qualification Records, and Welder Procedure Qualification Records shall be submitted for review and approval.

3.3.1.13.1 Welding Procedure Requirements

All welding shall be performed in accordance with the Seller's approved Welding Procedure Specification. Each Welding Procedure Specification shall be qualified with a Procedure Qualification Record as required in ASME B&PV Code, Section IX; AWS D1.1/D1.1M; and AWS D1.6; as applicable.

Welding of all stainless steel including, but not limited to, structural shapes, rectangular tubing, plate, and sheet shall be performed in accordance with AWS D1.6 nontubular, statically-loaded conditions. Welding of stainless-steel or carbon-steel piping shall be performed in accordance with the ASME B31.3 piping code for "Normal Fluid Service." Automatic pipe welding equipment and techniques may be used.

Welding of all carbon steel including, but not limited to, structural shapes, rectangular tubing, plate, and sheet shall be performed in accordance with AWS D1.1/D1.1M nontubular, statically-loaded conditions.

Welded connections on the lifting components shall be 100 percent visual and 100 percent Dye-Penetrant Test or Magnetic-Particle Test inspected. If a weld is in a radioactive material boundary (e.g., process piping), then these welds will require a minimum of a visual inspection and additional NDE (dye penetrant, magnetic particle, or x-ray, as appropriate).

All HEPA filter holding frame welds, where failure could result in process media by-passing the filter, shall be inspected with liquid penetrant.

Dye penetrant tests the final weld pass for ducting and transitions in contact with the HEPA filter air stream .

All load bearing welds, or welds deemed critical by the Buyer, shall be inspected with liquid penetrant by the Buyer. Examples of critical weldments are the fan and ductwork connections that are deemed critical by the structural and applied loads analyses.

If the filter housing manufacturer's weld inspection procedures defining specific weld acceptance criteria are based on, include or exceed this specification's referenced requirements of ASME N509 (Section 7.3), then a copy of their

procedure, marked to indicate the applicable requirements, shall be submitted as part of the NDE procedures package for approval before the start of fabrication.

3.3.1.13.2 Weld Joints and Preparation

Weld joints are as permitted by the referenced standards. Weld joint design, as noted on the fabrication drawings, shall be sent to the Buyer for review and approval before fabrication.

Post-weld heat treatment of carbon-steel piping is not required.

3.3.1.13.3 Weld Repairs

Weld defects shall be removed and repaired as allowed by the referenced standards. The original Welding Procedure Specification shall be used for weld repair. Welds that fail inspection shall not be ground out and repaired more than twice before the section is abandoned and replaced.

3.3.1.13.4 Weld Map

All welds (including typical welds) shall have unique numbering listed on a weld map(s). The weld map(s) shall include the weld number, weld procedure number, filler material control number, welder identification, NDE procedure number, and examiner identification. Individual weld maps are to be provided per component when multiple components are produced.

Weld identification shall be performed as follows:

1. Prepare weld identification drawings, isometric or spool, which show relative position of pressure containing welds and attachment welds to pressure retaining components.

2. Assign weld numbers to pressure-containing welds and attachment welds to pressure retaining components as made. Record weld numbers on weld identification drawings as welds are made.

3. Place the welder bonder identification symbol and weld number adjacent to welds on completion. Place the identification symbol approximately every 3 ft on long seams or large welds.

4. Do not reuse weld numbers. If a weld is completely replaced, assign a new number.

5. Show heat and lot numbers on weld identification drawings for materials requiring CMTRs.

Weld identification documentation shall be submitted to the Buyer for review and approval.

3.3.1.14 Fabrication Traveler

The Seller shall provide fabrication traveler(s) for the fabrication and testing of the above described HEPA filter skid assembly equipment. The fabrication traveler(s) shall include detailed procurement, fabrication, assembly, testing, shipping, and handling steps required to properly fabricate, assemble, and test the equipment in accordance with the drawings and specifications.

3.3.1.15 Monitoring and Control System

The monitoring and control system philosophy is a combination of local and remote operations (Section 3.1.2.7.3). The Seller shall interface with the physical instruments and components through the use of a Seller-provided termination panel. The termination panel shall meet UL 508A (as required), shall be rated for the environmental condition of the panel location, located in an area away from the process lines if possible, shall be easily accessible for maintenance, and shall meet NEC® (NFPA 70) requirements for working clearances.

Only local instruments and components are required to be wired and terminated to the termination panel. The local instruments and components[1] shall be routed in conduit and terminated at the local termination panel. Terminations shall be

[1] Instruments shown on the drawings with a box around the symbol are Monitoring and Control System virtual displays or controls and require no action by the Seller.

tension-clamp terminals capable of individual replacement (i.e., DIN rail mounted). An example is a Weidmüller® type WDU. Alternating current power and alternating current/direct current inputs shall be physically separated.

The Seller shall provide an interface panel wiring to an instrument/component drawing. See Figure 3-1 as an example.

Twisted shielded pair shall be used for analog instrument signal wiring. Individual wires shall be labeled for the destination with the cable being labeled with both FROM and TO information (see Appendix G).

3.3.1.16 Instrumentation Calibration and Characteristics

In general, all instrument transmitters shall provide an isolated 4-20 mA signal to the MCS, all pneumatic or operated motor control valves shall accept a 4-20 mA control signal from the MCS and provide position indication to the MCS. Interface connections shall be through wire termination points on the instruments. Instruments, tubing, piping, and wiring shall be installed in accordance with the instrument manufacturer's recommendations and the best practice for the industry. Purchasing and installation of the MCS input and output modules are not included in this contract. Locally indicating instruments and sensors shall be installed such that they are easily readable by an operator standing on the floor at the entry access point to the skid assembly freight container. The Buyer shall provide guidance with positioning based on best available knowledge of the configuration.

Certificates of calibration shall be provided with all instruments in the final data package and shall include the instrument accuracy and drift. The Seller shall provide Instrument types and manufacturer to the Buyer for approval before purchase of the instrument. Recommended field recalibration procedures shall also be provided in the final data package along with a list of special tools required for recalibration.

Component data sheets for the process instrumentation are to be provided as listed in the Bidder's Drawing and Data Commitments sheet (Appendix D).

DMJMtechnology

amec

TECHNICAL SPECIFICATION

PROJECT:	**Final DBVS Design**	**145579-D-SP-036**	**REV. 1**
PROJECT NO.:	**145579**	**OFF-GAS TREATMENT SYSTEM HEPA FILTER SKID ASSEMBLY DESIGN AND FABRICATION**	
CLIENT:	**AMEC E&E - Richland, Washington**		

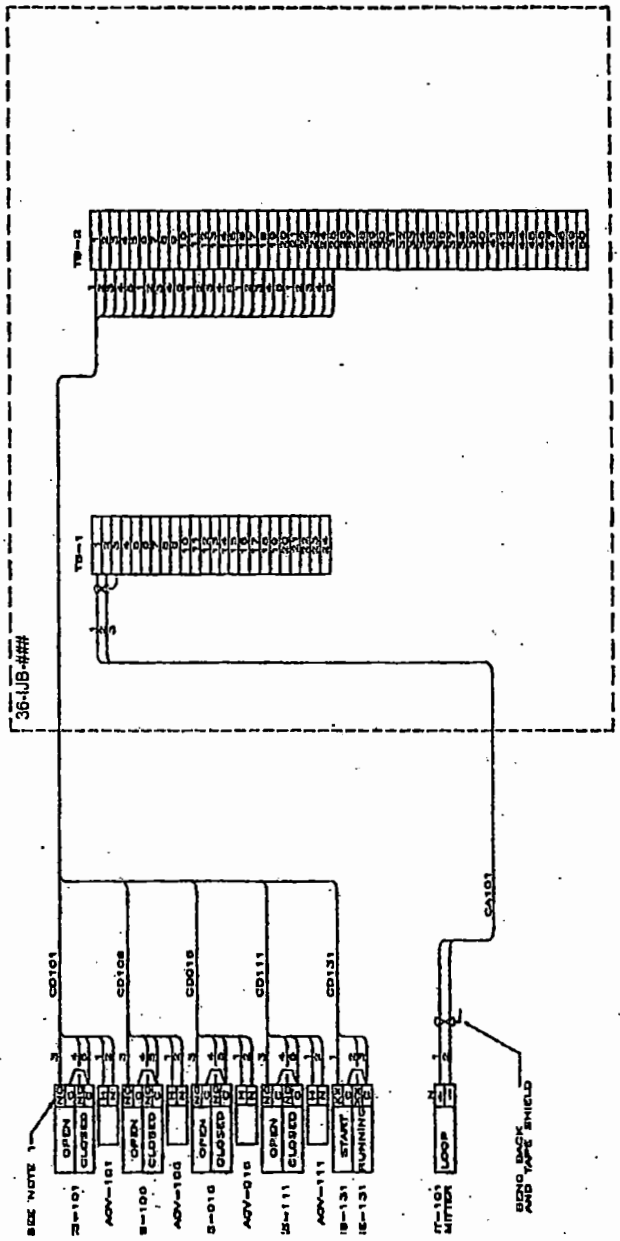

Figure 3-1: Interface Panel Wiring to Instrument/ Component Drawing (Example)

3.3.1.17 Common Interlocks/Set Points

System interlocks and set points described in this section are intended to provide the Seller with a general understanding of the operation of the HEPA filter skid assembly. They are provided to assist the Seller when determining operating ranges for instrumentation; however, they are estimates and are subject to change. These parameters will be a part of the logic program supplied by the Buyer and will be verified during testing.

The HEPA filter differential pressure alarms will consist of a Low differential pressure and high-high differential pressure on the first and second HEPA filters and across both HEPA filters. The low differential pressure shall be set at 25 Pa (0.3-in. w.g.). The high-high differential pressure on the first HEPA filter shall be set at 1,345 Pa (5.4-in. w.g.), the second HEPA filter set at 922 Pa (3.7-in. w.g.) and across both HEPA filters set at 1,345 Pa (5.4-in. w.g.). During system start-up there will be a 30-second time delay allowing the system to clear the low differential pressure condition.

3.3.1.18 Mechanical Assembly Requirements

All equipment shall be assembled to the structural frame observing the equipment manufacturer's recommended assembly instructions. Equipment shall be checked to ensure that it is provided with adequate amounts of fresh lubricants of the proper selection.

3.3.1.19 Workmanship

General: Remove all burrs and break all sharp edges.

1. Drawings:

    a. Dimensioning and tolerancing shall be interpreted per ANSI Y14.5M and

b. Tolerances not specified on drawings shall be as shown in Table 3-5.

Table 3-5: Standard Drawing Dimension Tolerances

Dimension	Tolerance
One Decimal Place	± 0.1
Two Decimal Places	± 0.06
Three Decimal Places	± 0..030
Angular	± 2°

2. Welding to ball valves:

   a. Ball valves shall be disassembled before welding to the valve body.

3. Piping and components:

   a. Pipe flange, man-way, and flange faces shall be within ± 2° of vertical or horizontal, whichever is appropriate;

   b. Pipe flange bolt holes shall straddle centerlines;

   c. Material and debris shall be removed from piping and components before welding/assembly; and

   d. Secondary containment housing flanges shall be flat.

3.3.2 Industry and Government Standards

The codes, standards, and source documents that provide the design fabrication and testing requirements are listed in Section 2. Sections within this specification provide specific details or reference for application of the codes and standards documents. Conflicts found between the referenced codes and standards will be referred to the Buyer for resolution.

3.3.3 Radiation

3.3.3.1 Electromagnetic Interference/ Electromagnetic Compatibility

The equipment shall be designed in accordance with the limits set forth in HNF-2962 as summarized in the following subsections.

3.3.3.1.1 Unintentional Radiators

Equipment shall comply with the emission limits specified in 47 CFR 15, Subpart B. The Seller must provide certification that the emissions from equipment or the device are within the limits specified in 47 CFR 15 or an Federal Communications Commission-accepted international standard.

3.3.3.1.2 Radio Frequency Interference Susceptibility

Applicable equipment shall be tested and evaluated for the immunity to radio frequency interference from portable communications equipment. The testing method and procedure for testing process instrumentation are found in IEEE Std C37.90.2.

Since the frequencies of interest are in the bands of 120 to 190 MHz and 420 to 480 MHz, the equipment shall be evaluated from 20 to 1,000 MHz. The electric field intensity of 30V/m shall be used for testing.

3.3.3.1.3 Equipment Alternating Current Mains Surge Protection

Applicable equipment shall be designed to withstand the surge waves specified in IEEE C62.41.1 and IEEE C62.41.2. The equipment shall be type tested by the manufacturer in accordance with this standard, and certification provided by the Seller.

3.3.3.1.4 Electrostatic Discharge Protection

The system or individual parts of the system shall not be damaged and shall continue to function after being subject to electrostatic discharge on operating panels and other controls normally available to operating personnel. The

manufacturer shall provide certification that electrostatic discharge testing was performed according to the methodologies found in ANSI C63.16 or IEC 61000-4-2. The test voltage should be at least 4 kV. ANSI C63.16 provides additional references to selecting the proper voltage ranges to be used.

3.3.3.2 Nuclear

All materials of fabrication shall be evaluated to be able to operate without loss of service while exposed to the maximum estimated unshielded contact radiation dose of 4.5×10^4 R based on a 5-year design life.

3.3.4 Cleanliness

Before assembly, and before preparing for shipment, all components shall be cleaned by flushing clean water and/or blown clean and dry with compressed air to the extent that extraneous materials, such as those listed below, are not present:

1. Metallic or other dusts (shop dust), chips, turnings, and weld splatter;
2. Abrasive particles;
3. Rust and other loose corrosion particles;
4. Magnetic/liquid penetrant residues, dye check, etc.;
5. Foreign material (i.e., paper, tape, plastic, sand, and wood);
6. Cutting oils;
7. Excess lubrication, grease, and oil; and
8. Marking dyes.

The fabrication traveler shall describe the cleaning and packaging steps taken.

The HEPA filter skid assembly equipment ports and pipe openings shall be temporarily capped following cleaning and drying for shipment. Packaging requirements following cleaning are documented in Section 5.2.

3.3.5 Corrosion of Parts

Solvents and cleaning solutions used on stainless steel shall be chloride-free. Stainless-steel components do not require painting except as required for identification or other markings. Paint, if used, used on stainless steel shall be epoxy-phenolic.

All exposed surfaces of carbon-steel parts shall be protected from corrosion by priming and painting (see Section 3.3.6 for protective coating requirements).

To the extent practical, connections between dissimilar metals shall be avoided.

3.3.6 Protective Coatings

Protective coatings shall be used on equipment where specified in this document. Protective coatings shall be used on the appropriate equipment in order to meet the reliability and maintainability requirements; to protect equipment from the environmental conditions; and to provide a clean, smooth surface for decontamination. The weldments shall be completed and painted entirely before installation of piping and components in the frames. Care shall be taken to protect the paint during equipment installation. Touch-up shall be performed to repair paint defects after the equipment installation is completed. Protective coating specifications shall be submitted to the Buyer for review and approval before fabrication. All exposed carbon steel surfaces shall be painted with the manufacturer's standard color.

3.3.6.1 Painting Preparation

The Seller shall prepare all surfaces in accordance with the manufacturer's instructions. Painting shall be performed in a clean, well-ventilated area separated from airborne particulates generated by shop operations.

3.3.6.2 Paint Application

1. All exposed carbon-steel surfaces shall be prepared and painted with a minimum of one coat of primer and a minimum of two finish coats.

2. Paint shall be applied to dry, clean, and adequately prepared surfaces in accordance with manufacturer's instructions. Each coat of paint shall be properly cured according to manufacturer's instructions before applying additional coats.

3. All paint containers shall remain closed until required for use. Paint shall be mixed before use in accordance with manufacturer's instructions. Agitation during application must be provided where specified by the manufacturer.

4. Paint may be applied with a brush or sprayer according to manufacturer's instructions.

5. All coats shall be applied in such a manner as to produce a film of uniform smoothness. Special attention shall be paid to crevices, weld lines, corners, and edges to obtain the required thickness.

6. The manufacturer's instructions for thinning, mixing, handling, and applying the products shall be considered to be part of this specification.

7. All coats shall be applied to produce a film of uniform smoothness and nominal thickness of not less than 3 mils with a total minimum thickness (with primer and top coat) of 5 mils. Special attention shall be paid to crevices, weld lines, corners, and edges to obtain the required thickness.

3.3.6.3 Primer

The Seller shall use standard zinc-rich primer for carbon-steel structures or piping. Precoated or stainless-steel pipe support components do not require painting.

3.3.6.4 Paint

1. The Seller shall use a standard top coat compatible with the primer for finish coats on carbon-steel structures or piping.

2. Precoated or stainless-steel pipe support components do not require painting.

3. The freight container external top coat shall be white to minimize solar heat load.

3.3.7 Interchangeability

The Seller shall specify the assembly level at which components shall be interchangeable or replaceable. This is a design consideration to be reflected on the design drawings and/or supporting documents (such as calculations and analyses).

3.3.8 Identification and Marking

Component identification labeling shall be performed in accordance with the following guidelines and shall match the final P&ID or electrical one-line diagram for the assembled system.

3.3.8.1 Equipment Labeling

The Seller shall label all equipment in accordance with this specification. Equipment to be labeled shall include, as a minimum:

1. Valves;

2. Instruments and gauges, pumps, motors, tanks, compressors, and filter housings;

3. Motor controls centers, power panels, instrument enclosures, and switches; and

4. Junction boxes shall follow the labeling convention below:

   a. Instrument (24V dc): 36-IJB-###

   b. Electrical (110V ac): 36-EJB-###

   c. Power (110, 120, 480V ac): 36-PJB-###

Equipment shall be labeled in accordance with the final P&ID for the assembled system. Tags shall be 1 in. by 3 in. minimum and use 3/16-in.-high black text on white background. The tags shall be plastic and have a 3/16-in. hole for attaching to components.

For components without a suitable flat surface, tags shall be attached using a tie wrap. For components with a suitable flat surface, tags shall be attached using clear silicon rubber adhesive. Equipment tags shall be located where they are readily visible and not subject to damage or accidental removal during equipment operation. Tags shall be suitable for the environment on which they are installed.

3.3.8.2 Piping and Ducting Labeling

Piping and ducting shall be marked with arrows and fluid type to denote the direction and the fluid conveyed. The fluid conveyed shall be marked as "EXHAUST," "FILTERED WATER," or "COMPRESSED AIR," etc. as applicable. Text shall be all capital letters. The label background and lettering colors shall be as follows:

1. Air stream ductwork or Condensate Drain Collection System piping shall be yellow field with black letters.

2. Compressed air piping/tubing shall be blue field with white letters.

3. Filtered water piping/tubing shall be green field with white letters.

4. Labels shall be made from self-sticking polyester or vinyl (Electromark® part number P400 series or approved equal). For pipes that are less than 3/4 in. in diameter, the label size and lettering shall be appropriately sized

to the size of the pipe. Pipe that is greater than 3/4 in. in diameter lettering shall be sized in accordance with Table 3-6.

Table 3-6: Pipe Labeling Format

Pipe Outside Diameter (minimum) (inch)	Pipe Outside Diameter (maximum) (inch)	Length of Color for Field for Pipe Marker (inch)	Size of Letter for Legend (inch)
0.75	1.25	8	0.5
1.5	2	8	0.75
2.5	6	12	1.25
8	10	24	2.5
10	--	32	3.5

5. The labels shall be placed on pipes in the location most readable from the operator's normal viewing position.

6. Piping labels shall be placed before and after each valve and piping joint.

3.3.8.3 Wire and Cable Labeling

All wires and cables shall be labeled at both terminations with the identification specified on the contract drawings. Wire label material requirements and color coding are given in Table 3-4.

3.3.8.4 Terminal Labeling

Terminal block label tags shall be a durable plastic material. The tag color shall be white background with black lettering. Each terminal on the terminal block shall be labeled with a clearly visible terminal number. Numbered terminal block covers may be used for this purpose.

The tag may be mounted on a surface of the enclosure in close proximity of the terminal block. Tags shall be attached securely by means of durable stranded stainless-steel cable, clamps, or chains.

3.3.8.5 Conduit Labeling

1. All conduits shall be labeled with the identification tag on the contract drawings and the highest voltage contained in the conduit as in the following example:

E-123 - 110 VAC 1PH

2. The minimum letter height shall be 1/4 in. The label length shall be as long as required to contain the required information. The label color shall be white background with black lettering. Text shall be all capital letters. The labels shall be a durable material that is permanently secured to the conduit by an adhesive or mechanical means. The label may be metallic or plastic. The label shall be affixed securely in place in a manner to prevent their loss, damage, slippage, or accidental removal. However, the means used to mount the label should permit its removal when necessary without damage to the surface to which it was attached.

3.3.8.6 Labeling of Handling and Lifting Devices

All equipment that is designed to be mechanically lifted shall have lifting points, the center of gravity, and the lifting weight marked. Lift points shall be identified with yellow paint. All specialized lifting devices shall be marked in accordance with DOE/RL-92-36, as follows.

Structural and mechanical below-the-hook devices shall be provided with identification displaying the following data, as a minimum:

1. Rated load,
2. Manufacturer's name,
3. Lifting device weight (if over 100 lb),
4. Drawing number (if applicable), and
5. Serial number (if applicable).

The identification data may be displayed on a nametag, nameplate, metal stamp, or other permanent marker. If the lifting device comprises several lifting devices that can be detached from the assembly, these individual lifting devices shall be marked with their individual load rating also.

Clearly mark and identify any components required for removal before equipment installation (e.g., shipping blocks).

3.3.8.7 Electric Motor Labeling

The markings on all motors shall be in accordance with the NEC® (NFPA 70) and NEMA MG-1. Care should be taken when painting, such that the motor nameplates, lifting eyes, or lifting swivel manufacture nameplates are not to be painted.

3.3.9 Nameplates

The skid assembly shall have a manufacturer's nameplate. The nameplate shall include: the project number, purchase order number, equipment name and number (provided by the Buyer), assembly weight; this specification number, latest revision, and other data to be supplied.

The skid assembly shall also have an EIN label centrally affixed to the assembly. Letter height for this label shall be 3 in., minimum.

3.3.10 Human Engineering

Human factors engineering principles and criteria shall be integrated into the design of systems and the facilities that house and support these systems. Operator movements and accessibility of equipment and controls in the work area shall be considered, and practical access to each system component for operation and maintenance shall be provided.

3.3.11 Qualification

The drawings, calculations, and associated design media shall show full compliance with this specification and Buyer-approved exceptions or modifications. The Seller's design media (drawings and calculations) shall be

prepared by, or under the supervision of, a Professional Engineer licensed in the State of Washington and sealed. The responsibilities of the assigned Professional Engineer for preparation and control of each deliverable shall be in accordance with the engineering practice laws and regulations of the State of Washington. Portions of drawings originated by others, such as as-built vendor information on P&IDs, shall be clearly identified. If the Seller cannot meet these requirements through utilization of existing registered Washington State Professional Engineers or certifying Professional Engineers through comity in the State of Washington, the Seller shall inform the Buyer so that a resolution can be reached.

To obtain approval for the design of the fabricated system the Seller shall perform the following:

1. Prepare calculations, required by this specification, and document how the results of the calculations were incorporated into the design and fabrication drawings (e.g., adequacy of pump to meet calculated demand, selection of weld size to meet structural requirement).

2. Identify those materials and/or components that require a CMTR or CoC. At a minimum, CMTRs are required for process piping and all material that provides a structural support function (e.g., struts, plate, pipe fasteners).

3. Prepare complete data sheets and obtain vendor cut sheets for major components of the assembled system. At a minimum, the set of major components shall be those shown on the P&ID (valves, instruments, equipment, etc.). This information package will be used to evaluate how the Seller has evaluated the form, fit, and function of components for their intended use as shown on drawings and in supporting calculations.

3.3.11.1 Structural Calculations

In general, equipment and structures shall be analyzed and designed in accordance with ASME AG-1, UBC (1997) and ASCE 7-98, as the minimum requirements. The loads and load combinations used in the analysis shall be as defined in UBC (1997) or other national codes and standards, as referenced in this section or as otherwise defined in this specification. In addition, the Hanford Site-specific design requirements are included as part of this specification and

shall be incorporated in the analysis, as applicable, in determining the loads, load combinations, and allowable stresses to which the equipment or structures shall be designed.

3.3.11.1.1 Dead Loads

Dead loads include the weight of all permanent materials and equipment, including the assembled system equipment weight, with and without the weights of fluids and materials being handled.

The unit weights of material and construction assemblies shall be those given in ASCE 7-98. Where unit weights are neither established in that standard nor determined by test or analysis, the weights shall be determined from data in the Seller design and fabrication drawings or from catalog cut sheets.

3.3.11.1.2 Live Loads

Live loads are those loads produced by the use and occupancy of the unit and do not include construction and environmental loads such as wind load, snow load, rain load, earthquake load, flood load, or dead load. Live loads are produced by operations, maintenance workers, and equipment.

1. Live loads shall be not less than the minimum uniform load or concentrated load stipulated in ASCE 7-98.

2. The minimum roof design live load shall be 20 lb/ft^2 (includes ashfall).

3. The weight of service equipment that may be removed with change of use of a given area shall be considered as live load.

3.3.11.1.3 Earthquake Loads

Earthquake induced design loads, as a minimum, shall comply with the UBC 1(997) Seismic Zone 2B for essential facilities. Seismic assessments shall use the UBC (1997) (Section 1632) or ASCE 4-98, with an importance factor, I_p = 1.5 for structures, systems and components and seismic zone factor, Z = 0.2. The soil profile type as defined by UBC (1997) (Section 1636.2) is taken as SE and with a seismic coefficient, C_a of 0.24, for conservatism.

For load combination evaluations per ASME AG-1 (Table AA-4212), only levels A and B apply.

3.3.11.1.4 Snow Loads

Snow loads for the equipment shall be in conformance with ASCE 7-98. A ground snow load, of 15 lbf/ft^2 shall be used for calculating snow load. Unbalanced snow loads resulting from drifting or sliding shall be considered. snow loads, full or unbalanced, shall be substituted for live loads where such loading results in larger members or connections.

3.3.11.1.5 Wind Loads

The equipment shall be designed to resist pressures from wind from any direction. Partial wind loading shall be considered if it produces a more severe effect. Wind load design shall comply with ASCE 7-98, using the 85 mph "3-second gust wind velocity" with an importance factor of 1.15, exposure Category C.

3.3.11.1.6 Ash Loads

An ash loading of 5 lb/ft^2 shall be considered in the design of equipment or support structures exposed to the elements. The ash loading shall be evaluated using the load combination, S = D + L + A in addition to other load combinations, defined by the referenced codes and standards in determining the governing loads for design and analysis.

3.3.11.1.7 Load Combinations and Stresses

Load combinations, allowable stresses, and strength requirements as defined in UBC (1997) and ASCE 7-98 shall be used in determining the governing load combination(s), acceptability of the design, and stability of the equipment or structure.

The stability of the equipment or structure against overturning and sliding shall be determined and the stability maintained, based on a safety factor of 1.5. Anchorage of the equipment components to the support structure(s) shall be

designed using the methods in UBC (1997) for life-safety systems (importance factor, I = 1.5).

Anchorage shall comply with UBC (1997). Acceptable types of concrete anchorages include industry-standard wedge-type expansion-type anchors having capacities published by the International Conference of Building Officials. Anchor size shall be a minimum diameter of 12 mm (1/2 in.) regardless of calculated anchorage requirements. Alternative anchorage methods or types may be proposed for Buyer consideration.

3.3.11.1.8 Hoisting and Rigging Loads

The lifting apparatus (eyebolts, hoist rings, and lifting bails) shall be designed in accordance with the AISC *Manual of Steel Construction—Allowable Stress Design*, the AISC *Manual of Steel Construction—Load and Resistance Factor Design*, and ASME B30.20. Equipment designed and fabricated by the Seller shall have a safety factor of 3 based on yield strength. Equipment purchased by the Seller shall have a safety factor of 5 based on ultimate strength. Documents shall be provided to the Buyer demonstrating incorporation of these safety factors. The Seller shall identify the total weight, the center of gravity, and the lift points and rigging methods necessary for lifting each component. Lift points shall be identified with yellow paint. Any special tooling, spreader bars, or other recommended fabricated devices for lifting shall be provided by the Seller.

3.3.11.1.9 Secondary Confinement Hydrostatic Load

For the secondary confinement of the Condensate Drain Collection System, the confinement structure shall safely react with the hydrostatic load of a liquid having a specific gravity of 1.0 to a depth of 8 in (level to be reviewed based on design of confinement system).

3.3.11.2 Mechanical Calculations

Mechanical calculations performed for the piping (nonductwork) system shall be prepared in accordance with piping code requirements in ASME B31.3. As a minimum, calculation shall include the following subjects:

1. Pipe wall thickness calculations for pressure (ASME B31.3, Paragraph 304.1).

2. Stress calculations for sustained loads because of pressure, dead load, and any other sustained loads (ASME B31.3, Paragraph 302.3.5).

3. Stress calculations for displacement stresses, such as thermal loads. Use Equation (16) in ASME B31.3 (Paragraph 319.4) for flexibility analysis on simple systems.

4. Stress calculations for occasional load such as pressure, dead weight, other sustained loads, and earthquake loads (ASME B31.3, Paragraph 302.3.6).

5. Hanger stress calculations for dead weight, thermal, and seismic loads (ASME B31.3, Section 321; ASCE 7-98; UBC 1997, and the AISC *Manual of Steel Construction—Allowable Stress Design* for source reference, in addition use an Importance factor - Ip = 1.5 and seismic coefficient - Ca = 0.34).

The Seller shall determine the need for a corrosion allowance for the processing fluid and operating conditions. This assessment shall be documented and any allowance clearly identified in design calculations and/or material specifications.

3.3.11.2.1 Normal Operating Pressure Loads

Normal operating pressure loads in the ductwork resulting from the gas flow condition shall be considered and are to be addressed in the design of the skid assembly. For the design analyses performed in accordance with this specification, the design flow, pressure, and temperature for the various ductwork systems are listed in Table 3-7.

Table 3-7: High-Efficiency Particulate Air Filter Skid Assembly Piping

Description	Design Conditions
Main air stream ducting and filter assemblies	• Determined by the Seller using Table 3-2 conditions and vendor data for components.
Condensate Drain Collection System	• Determined by the Seller.
Filtered Water Supply System	• Design pressure of 150 psig at 150 °F.
Compressed air supply to skid assembly	• Maximum normal condition of 5 cfm air at 90 psig and 125 °F. • Design pressure of 150 psig at 150 °F.

w.g. = water gauge.

3.3.11.2.2 Additional Mechanical Calculations

Additional calculations that shall be performed, if applicable for the assembled system, include: head loss (for pump sizing), valve actuator sizing, piping, ductwork, and equipment heat trace (for freeze protection and temperature maintenance, as needed).

3.3.11.3 Electrical Calculations

Electrical calculations shall be done in support of NEC® (NFPA 70) requirements, ANSI/IESNA RP-7 requirements, and requirements of this specification. Calculations shall include, but are not limited to:

1. Electrical load calculation, with any assumptions regarding demand factors or load diversity clearly stated.

2. Wire sizing calculation for all power conductors, with all assumptions regarding duty cycle clearly stated.

3. Equipment sizing/selection calculation (transformers, distribution panels, overcurrent protection, etc.), with any assumptions clearly stated.

4. Raceway sizing calculation, for all conduit and other raceways.

Care shall be taken to ensure that ambient temperature considerations and heat gain from direct sun are considered appropriately when performing calculations for wire and equipment size.

3.3.12 Document Submittal

The following subsections provide the minimum document requirement submittals

3.3.12.1 General Requirements

Information to be supplied with the bid, for review and as final is shown on the Bidder's Drawing and Data Commitments sheet (Appendix D).

Each document submittal shall be identified with this specification number, item number, purchase order number, and Seller's identification number. Submittals shall be transmitted to the Buyer in accordance with the directions found in the Request for Quote.

Data shall be sufficiently clear to allow legible copies to be made on standard reproduction equipment after microfilming.

Approval by the Buyer does not relieve the Seller from the responsibility for accuracy or adequacy of design under this specification.

Submittals are divided into two types: (1) those requiring "approval before proceeding" (i.e., weld procedures or prepurchase evaluation data) and (2) those requiring "approval before shipment" (i.e., vendor information data).

Submittals requiring approval before shipment will be reviewed to verify completeness and adequacy for their intended purposes.

Unacceptable items that require approval before proceeding will be handled as specified below.

A submittal requiring approval that is not approved by the Buyer will be dispositional as:

1. "Not Approved, Revise and Resubmit." The submittal is considered technically deficient, or incomplete, and is therefore unacceptable. Resubmittal is required; hence fabrication, procurement, or performance of procedures shall not proceed.

2. "Approved with Exception." Fabrication, procurement, and performance of procedures may proceed, and resubmittal is required to verify incorporation of the exception. Final acceptance of the item is contingent on the Buyer's receipt and approval of the corrected submittal.

Submittals requiring approval before shipment that are determined to be incomplete or inadequate will be marked "Resubmit" and will be returned. An explanation of the deficiencies will be included for corrective action by the Seller.

3.3.12.1.1 Design Documentation

The Seller shall provide all shop fabrication drawings that detail how the specified parts and materials will be assembled to meet the requirements of this specification. Shop fabrication drawings shall clearly identify the material type and grade on the Bill of Material. The Seller shall include a Bill of Material and submit to the Buyer for review and approval. Final as-built drawings shall be provided by the Seller at the conclusion of fabrication and testing. Arrangement drawings (Sketch DBVS-SK-M108) are provided in Appendix A. Modifications to the arrangement drawings can be proposed by the Seller to improve the fabrication of the total assembly; however, modifications and the detailed fabrication drawings are to be approved by the Buyer before procurement of material or initiation of fabrication.

The Seller shall fabricate the equipment according to the approved design drawings submitted to the Buyer.

The Seller shall submit design questions and request design changes in writing to the Buyer for resolution or concurrence.

The Seller shall maintain designated full-size drawing sets for incorporating design changes concurred with the Buyer. The Seller shall incorporate all redline changes on the drawings and submit both paper and electronic copies of the as-built drawings to the Buyer.

All design calculations required for the ASME AG-1 components and ASME B31.3 piping, support structures, and lifting and handling shall be included in reports that have undergone independent review by the Seller's qualified personnel. Design calculation reports shall be submitted to the Buyer for review and approval before the start of fabrication.

A compliance matrix shall be completed that documents that all components within the HEPA filter skid assembly are in compliance with the appropriate sections of ASME AG-1, ASME N509, and ASME N510. An example of a suitable compliance matrix is included in Appendix B.

3.3.12.1.2 As-Built Drawings

The Seller shall deliver to the Buyer three hard copies and one electronic copy of the final fabrication level as-built drawings and specifications accurately depicting the product delivered. Drawings shall include dimensional layouts, dimensioned subassemblies, dimensioned component details (if not included on manufacturer's cut sheets), physical location of the sample and injection manifolds relative to the filter housing, flow and electrical diagrams, material and fastener sizes, descriptions, weld symbols, and notes. The designer's name, responsible engineer's name, Bill of Materials, and drawing numbers shall appear on the index (cover sheet).

3.3.12.2 Fabrication Traveler Submittal

The Buyer will insert witness and hold points in the fabrication traveler during their review and approval of the fabrication traveler. Witness points can be waived by the Buyer, but must be documented in writing. Hold points require the Buyer personnel to be present during the fabrication, inspection, or test step.

3.3.12.3 Schedule and Component Lead Time

A proposed schedule of fabrication, inspection, and testing of all HEPA filter skid assembly equipment shall be submitted for review with the bid and approval with the submittal of the fabrication traveler(s).

A proposed schedule shall be provided showing the discrete steps and schedule to complete all work described in this specification. The schedule shall identify fabrication drawings, engineering, parts procurements, fabrication, examination, inspection, and testing activities. A list of components and lead time delivery for each component shall be provided to the Buyer. Component substitutions can be proposed by the Seller to improve the fabrication, schedule, or cost; provided such substitutions are approved by the Buyer.

The schedule shall allow two weeks for review and approval of structural calculations and one week for review and approval of all other documents. The Buyer shall provide a calculation review sheet identifying requirements for the calculations.

3.3.12.4 Spare Parts List and Special Tool Requirements

The Seller shall provide the following, as required for installation, maintenance, and operation of the assembly:

1. Recommended spare parts list for Buyer concurrence. The spare parts lists shall be based on equipment mean time between failures and long lead procurement items (long lead defined as longer than four weeks from order placement to delivery).

2. List of required special tools.

3. Special tools manufactured during fabrication shall also be provided on delivery.

4. List of required lubricants.

5. Lubricant required for startup and operations shall be delivered with Material Safety Data Sheets and shall be provided on delivery of related equipment.

Submit spare parts, special tool, and supporting vendor data for review and approval.

3.3.12.5 Final Data Package

The Seller shall not ship the skid assembly and ancillary hardware until all tests and inspections have been performed and the final data package is complete and approved by the Buyer. The Seller shall notify the Buyer three weeks before the intended shipping date, and shall allow the Buyer one week after receiving the package, and before shipment, to review the data package. The final data package shall include all items specified on the Bidder's Drawing and Data Commitments sheet (Appendix D).

3.3.13 Personnel and Training

Records for the following areas shall be prepared and made available to the Buyer. Review of the qualifications may be subject to a surveillance or source inspection by the Buyer.

3.3.13.1 Welder Qualification

Welder shall be qualified in accordance with ASME B&PV Code, Section IX and AWS D1.1/D1.1M, as applicable. Documentation for personnel performing welding, including tacking, shall be maintained in a Welder Performance Qualification Record.

3.3.13.2 Weld Examination

Welds shall be examined per ASME B31.3 at a minimum for piping and pipe supports and per AWS D1.1/D1.1M for structural steel. An ASME B31.3 weld examiner shall meet the code requirements. Welded connections on the lifting components shall be 100 percent visual and 100 percent Dye-Penetrant Test or Magnetic-Particle Test inspected.

3.3.13.3 Electrical Inspection

The Hanford Site CH2M HILL NEC® Electrical Inspector shall inspect equipment fabricated under this contract that is not NRTL-listed or labeled. All deficiencies found shall be corrected or dispositioned before shipment.

4 QUALITY ASSURANCE REQUIREMENTS

The following subsections provide the minimum QA requirements for this specification.

4.1 GENERAL

The Seller shall document, implement, and maintain a QA Program that is based on a national standard and identifies the activities and items to which it applies. The QA Program must address each of the areas discussed within this QA requirements flowdown. The Seller must submit the QA Program to the Buyer for review before award of contract.

The Seller shall assess its QA Program regularly to ensure its effective implementation.

The QA Program shall provide for indoctrination and training, as necessary, of personnel performing activities affecting quality to ensure that suitable proficiency is achieved and maintained. Personnel who conduct inspection and test activities shall be qualified to conduct those activities and certification of the qualification must be submitted to the Buyer on request.

4.1.1 Design

The Seller must define, control, and verify designs developed for this contract. Design inputs must be specified on a timely basis and correctly translated into design documents. Design interfaces must be identified and controlled. Persons who did not design the item must be used to verify design adequacy. Design changes, including field changes, must be reviewed and approved by the same personnel who reviewed and approved the initial designs.

4.1.2 Procurement Document Control

Procurement documents must include or reference sufficient quality and technical requirements in order to describe the items and services requested. Procurement documents must be reviewed and approved by the authorized personnel within the Seller's organization, and changes must be reviewed and

approved by the same individuals who reviewed and approved the original procurement documents.

The Seller must have a process for accepting procured items. This process must include one or a combination of the following: Certificate of Conformance, source verification, receiving inspection, and post-installation testing.

The Seller shall provide a legible and reproducible CoC. The CoC shall be signed by the Seller's authorized representative responsible for quality assurance.

The CoC shall contain, as a minimum, the following information:

1. Identification of the Buyer's contract or purchase order number under which the materials, equipment, component, or service is being purchased.

2. Provide traceability by means of positive identification from the material, equipment, component, or service to the CoC.

3. Identify the specific procurement requirements met by the material, equipment, component, or service supplied (i.e., codes, standards, or other applicable specification). The procurement requirements shall include any approved changes, waivers, or deviations applicable to the subject materials, equipment, component, or service.

4. Identify any procurement requirements that have not been met, together with an explanation and the means for resolving the nonconformance.

The Seller's certification system, including the procedures to be followed in filling out a certificate and the administrative procedures for review and approval of the certificates, shall be described in the Seller's QA Program.

The certification system shall provide a means to verify the validity of the Seller's certificates and the effectiveness of the certification system (i.e., during the performance of audits of the Seller or independent inspection or test of the items). The Buyer shall conduct this verification at intervals commensurate with the Seller's past quality performance.

The Seller is required to flowdown all QA requirements from this contract to any subtier subcontractor/suppliers. Any access to the subtier subcontractor/suppliers' facilities for verification activities will be requested through the Seller before access, and verification activities may be performed jointly.

The Seller shall warrant that all items furnished under the contract are genuine (i.e., new; not refurbished and/or counterfeit) and match the quality, test reports, markings, and/or fitness for intended use as required by the contract. Any materials furnished as part of the contract that the government or other duly recognized agency had been previously found to be suspect/counterfeit shall not be used.

All items are subject to inspection at the Seller's facility or lower-tier subcontractor's facility. The Seller shall notify the Buyer, at least seven working days in advance, of the time when such items or activities will reach the Buyer's identified inspection hold points. As a minimum, final inspection before packaging for shipment shall be considered such a hold point, unless specifically waived by the Buyer.

The Seller shall obtain all materials to be delivered under the contract directly from the original manufacturer or an authorized manufacturer's representative. The Seller shall provide legible and reproducible documentation, with the materials, that provides objective evidence that the items were provided by the original manufacturer. Such documentation may include a copy of the purchase order to the manufacturer and shipping documentation or manufacturer invoice (each of which would identify that the materials were obtained from the original manufacturer).

The Seller shall submit, with or prior to item shipment, a recommended spare parts list. The list shall provide the name and address of the original supplier of the replacement part, and the part's drawings, specification, or catalog identity including applicable change or revision information.

All items and/or services procured under this specification shall be subject to inspection by the Buyer or Buyer's representative throughout the contract. Additionally, procured items and/or services shall be subject to inspection for acceptance.

The Seller shall grant access to the Seller's facilities and records for inspection or audit by the Buyer, his designated representative, and/or other parties authorized by the Buyer.

4.1.3 Instructions, Procedures, and Drawings

The Seller must document and implement appropriate instructions, procedures, and drawings. Instructions and procedures must include or reference appropriate quantitative or qualitative acceptance criteria for determining that prescribed activities have been satisfactorily accomplished.

4.1.4 Identification and Control of Items

The Seller shall establish controls to ensure that only correct and accepted items are used or installed.

All items shall be identified with the applicable part number, model number, or other identifier prescribed in this specification. Identification shall be on the item or the package containing the item. When the identification is on the item, such marking shall not impair the service of the item or violate dimensional, chemical, or physical requirements.

The Seller shall submit a legible and reproducible copy of the product data sheet (e.g., drawing, catalog cut sheet, brochure) that provides adequate information to enable the Buyer to verify the form and function of the articles procured. One copy of such documentation, unless otherwise specified, shall accompany the item.

The Seller shall identify each item, assembly, package, container, or material, having limited shelf life, with the cure date or date of manufacture and the expiration date. The Seller shall specify any storage temperatures, humidity and environmental conditions that should be maintained. Material shall not be furnished having less than 75 percent of the total shelf life available at the time of shipment.

Certified Material Test Reports containing actual chemical analysis and mechanical properties of the material being supplied shall be submitted before or

with each shipment of material. Each CMTR shall contain the following information as a minimum:

1. Product description [e.g., specification(s), codes, type of material];
2. Actual results of chemical analysis/mechanical testing in accordance with the provisions of the code, standard, and/or specification;
3. The specification and material grade;
4. Traceability to the item tested (e.g., heat number, lot number);
5. Name and address of manufacturer (may be identified by letterhead, logo, etc.);
6. Manufacturer's ASME certificate number and expiration date;
7. Buyer's contract number and item number to which the report applies; and
8. The report shall be signed by an authorized representative of the manufacturer.

In addition to the ASTM/ASME marking, the Seller shall physically identify each item/part furnished to the Buyer with the heat number (or identification number that is traceable to the heat number) and the contract number. Methods and materials used to accomplish required markings shall be compatible with the material being marked. Small items shall be bagged/wrapped and tagged.

4.1.5 Control of Processes

The Seller shall have processes to control processes, including special processes that control or verify quality (e.g., welding, heat treating, and NDE). Special processes must be performed by qualified personnel using qualified procedures in accordance with specified requirements.

Seller personnel performing weld inspections shall be certified as a Certified Welding Inspector (CWI) in accordance with the requirements of AWS QC-1.

The following documentation shall be submitted for Buyer approval before the start of fabrication:

1. Current AWS CWI certification;

2. Current/valid visual acuity examination (must be given every three years); and

3. Visual weld inspection procedure(s).

Welding procedures and personnel shall be qualified in accordance with applicable AWS or ASME requirements specified in the contract. The Seller shall submit copies of all welding procedures, procedure qualification records, and welder qualification records to be employed. Buyer review and approval of these documents is required before start of fabrication.

Nondestructive examination personnel shall be qualified and certified in accordance with the recommended guidelines of ASNT SNT-TC-1A. The Seller is not authorized to begin fabrication until the following documentation has been approved by the Buyer:

1. NDE personnel qualification and certification procedure;

2. Level I, II, and/or III personnel qualification and certification records, including objective evidence of NDE training, formal education, examination, experience, date of hire, and current visual acuity exam; and

3. NDE method procedure(s) compliant with the applicable requirements of the Buyer's contract.

Nondestructive examination reports and radiographs shall be traceable to the item examined, shall include all essential examination parameters, and shall be signed and dated by a qualified/certified NDE examiner. All NDE reports and radiographs shall accompany or preceded shipment of the item or component. Radiographs and radiographic technique and examination reports shall be subject to approval by the Buyer before shipment.

These requirements shall be passed to lower-tier subcontractors.

4.1.6 Verification and Verification Methods

The Seller shall have a process to plan and execute inspections to verify conformance of an item or activity to specified requirements. The process shall document the characteristics to be inspected and inspection methods to be employed. The Seller shall document the results of inspections. Inspections for acceptance shall be performed by persons other than those who performed or directly supervised the work being inspected.

The Seller shall submit, as required by the contract, legible, reproducible copies of inspection and/or test reports. The reports shall include, as a minimum, the following information:

1. Identification of applicable inspection and/or test procedure;

2. Resulting data for all characteristics evaluated, as required by inspection or test procedures, including reference to information on action taken in connection with nonconformances;

3. Traceability to the item inspected/tested (e.g., serial number, part number, lot number), date of inspection, name of inspector, type of observation; and

4. Signature of the Seller's authorized representative or agency performing the inspection or test.

Key items to be verified include, but are not limited to, the mechanical and electrical function of all equipment and components.

4.1.7 Test Control

The Seller shall have a process (to plan and execute tests) to verify conformance of an item or activity to specified requirements. The process shall document the characteristics to be tested and test methods to be employed. Tests required to collect data, such as for siting or design input, shall be evaluated.

The Seller shall prepare a detailed test plan. Before starting work, the plan shall be submitted to the Buyer for approval and insertion of Buyer's designated

source inspection and witness notification points. The test plan shall provide the following, at a minimum:

1. Traceability to the Buyer's purchase/contract order document number;
2. Name or description of the item to be tested (e.g., components, assemblies, subassemblies);
3. Method/procedure to be used during test; and
4. Subsequent revisions/modifications to the test plan require review and approval by the Buyer before implementation of the changes.

The Seller shall provide test reports that include, as a minimum:

1. Item tested,
2. Date of test,
3. Tester or data recorder,
4. Type of observation,
5. Results and acceptability,
6. Action taken in connection with any deviations noted, and
7. Person evaluating test results.

Test plans and test reports must be submitted to the Buyer for the project records.

4.1.8 Control of Measuring and Test Equipment

The Seller shall control tools, gauges, instruments, and other measuring and testing equipment used for activities affecting quality, and shall calibrate at specified periods and adjust to maintain accuracy within necessary limits.

The Seller shall maintain legible, reproducible copies of the Certificates of Calibration, traceable to the NIST, for each article contracted. Each Certificate of Calibration shall be signed by the Seller's representative responsible for calibration, attesting to its authenticity, and shall be identified with the following information:

1. Buyer's contract number,

2. Identification of the article to which the Certificate of Calibration applies, and

3. Standards used for calibration.

In addition, the Seller shall submit a report of actual calibration results. The report shall be identifiable to the acceptance criteria of the items submitted and shall meet the contract requirements. The report shall contain the signature of the authorized representative of the agency verifying compliance. One copy of the documentation, unless otherwise specified, shall accompany the applicable item(s) shipped.

The Certification of Calibration will be held on file by the Buyer as objective evidence to support the actual test results and attest to the fact that the calibrated item(s) met requirements.

4.1.9 Handling, Storage, and Shipping

The Seller shall prepare and submit for Buyer review and approval, before use, procedure(s) or plan(s) for the packaging and shipping of materials, equipment, or components to be furnished under the contract. The procedure(s) or plan(s) shall include, as appropriate, cleanliness inspection before packaging, use of preservatives and coatings, descriptions of specially designed shipping containers, handling and rigging data, final inspections, and the type of transfer and shipping vehicles.

4.1.10 Inspection, Test, and Operating Status

The Seller shall have a process to identify the status of inspection and activities on items or in documents traceable to the items, and to ensure that items which

have not passed the required inspections and tests are not inadvertently installed, used, or operated. Status shall be maintained through indicators (i.e., physical location) and tags, markings, shop travelers, stamps, inspection records, or other suitable means. The Seller must specify the authority for application and removal of tags, markings, labels, and stamps.

4.1.11 Control of Nonconforming Items

The Seller must have a process to control items that do not conform to specified requirements to prevent inadvertent installation or use. These controls must provide for identification, documentation, evaluation, segregation (when practical), and disposition of nonconforming items, and for notification to affected organizations.

All nonconforming conditions identified at the Seller's facility, with a proposed disposition of "Accept-As-Is" or "Repair," as defined below, shall be approved by the Buyer before supplier implementation of the nonconformance report (NCR) disposition:

1. Accept-As-Is: Nonconforming materials will perform its intended function.

2. Repair: Nonconforming item can be corrected so that its characteristics meet requirements of the contract.

Nonconforming items identified as "Repair" or "Rework" shall be re-examined in accordance with applicable procedures and with the original acceptance criteria, unless the nonconforming item disposition has established alternate acceptance criteria.

Nonconformances shall be documented by the Seller on their own nonconformance form or one provided by the Buyer. After documenting the nonconformance and providing a proposed disposition and technical justification, the report shall be submitted to the Buyer.

After the proposed disposition has been evaluated, and approved or rejected by the Buyer, the form shall be returned to the Seller. Corrective action may only take place after Buyer approval. Copies of completed, Buyer-approved, NCRs shall be shipped to the Buyer with the affected item.

4.1.12 Corrective Action

The Seller shall have a process to promptly identify conditions adverse to quality, and to correct them as soon as practical. The identification, cause, and corrective action for conditions adverse to quality shall be documented and reported to appropriate levels of management. Follow-up action shall be taken to verify implementation of this corrective action.

During the period of performance of work for this contract, the Seller shall provide, to the Buyer, copies of all documents that constitute reports of conditions adverse to quality (e.g., deficiencies, weaknesses, nonconformances, or noncompliances with established requirements) related to items or services provided to the Buyer.

In addition, the Seller shall ensure flowdown of these requirements to its subtier subcontractors/suppliers of quality-affecting items and/or services procured for work performed for the Seller.

4.1.13 Quality Assurance Records

The Seller shall have a process to specify, prepare, and maintain records that furnish documentary evidence of quality. Records shall be legible, identifiable, retrievable, and protected against damage, deterioration, or loss. The process shall establish and document responsibilities and requirements for records transmittal, distribution, retention, maintenance, and disposition.

4.1.14 Control of Graded Fasteners

The following are minimum requirements for high strength graded fasteners produced in compliance with national consensus standards (i.e., SAE, ASTM, ASME):

1. Fasteners shall exhibit grade marks and manufacturers identification symbols (headmarks) as required in the specifications referenced in the contract.

2. When requested by the Buyer, the Seller shall provide legible and reproducible copies of the manufacturers CMTRs. These CMTRs shall

report the values of the actual chemical and physical tests performed on the represented fastener lot and material heat. Fastener packaging and labeling shall be traceable by lot number or other means to the CMTR.

3. Fasteners shall be inspected and documented to verify compliance with this QA Clause. Additionally, fasteners may also be subject to destructive testing by the Buyer to verify compliance.

4.2 INSPECTIONS AND TESTS

Factory Acceptance Testing of the equipment is required. Factory Acceptance Test specifications, procedures, and documentation of test results shall be prepared and submitted. All temporary electrical equipment including wiring and instruments necessary to allow component testing will be provided by the Seller.

Water used for hydrostatic testing shall be tested for chlorides before use. The chloride content of the test medium shall not exceed 250 ppm for water temperatures of 149 °F or less.

Dated calibration labels shall be visible on all test equipment. Measuring and test equipment used for acceptance inspections and tests shall be controlled in accordance with the Seller's QA Program and shall be traceable to a national measurement standard.

Each component, instrument, sensor, and valve shall be tested to verify that it is functional. In order to complete these functional check-out tests, the Seller will have to provide temporary power and switches for each valve activation and component activation circuit in the system. Compressed air or bottled nitrogen is also required for pneumatically-actuated valves. All electrical devices shall be tested from the skid junction box to the end device and all instrumentation shall be tested from the skid junction box termination.

4.2.1 Electrical Testing

The following sections detail the requirements for electrical testing.

4.2.1.1 Motor Test

All motors shall be given a routine test to demonstrate that the motors are installed correctly and free from mechanical and electrical defects. Motor tests shall be performed in accordance with the Seller's standard practice. Tests shall include, but are not limited to:

1. Motors shall be designed and tested by the manufacturer in accordance with NEMA MG-1. Certificates of Conformance and/or certified test results shall be supplied for the following tests:

    a. Rated load readings of current, power, and speed at rated voltage and frequencies;

    b. No load readings of current, power, and speed at rated voltage and frequencies;

    c. Mechanical vibration and motor balance test results in accordance with NEMA MG 1-12.06 and NEMA MG 1-12.07;

    d. High potential test results in accordance with NEMA MG 1-12.03; and

    e. 1000V dc Megger test for one minute, phase to ground.

2. Motors shall be checked for correct rotation and incoming power terminals shall be labeled by phase for proper rotation.

4.2.1.2 Wiring and Breaker Test

All wiring and breakers shall be given routine tests to demonstrate that they are free from mechanical and electrical defects. Wiring and breaker tests shall be performed in accordance with the Seller's standard practice. The Seller shall provide wiring and breakers test data that include, but are not limited to:

1. Megger tests are required for all electrical power wiring;

2. Continuity testing is required for all electrical power and instrumentation wiring; and

3. Circuit breakers are to be inspected for proper size, correct installation, manual operation of handles, and suspect/counterfeit parts.

4.2.1.3 Instrument Tests

The Seller shall prepare a log of instruments tested by a certified-Electrical Inspector.

4.2.2 Remote Operated Valve Tests

Verify remote operated valves cycle through an open and close cycle and achieve their specified fail position on loss of compressed air or loss of electric power.

Each valve shall be activated to verify that the valve functions and that valve-position-switch-contacts are properly made (using an ohmmeter). The valve shall be activated from the skid junction box and verify limit-switch-contacts change state at the skid junction box. The Seller shall make a checklist that indicates all contacts checked. The Valve-Test Checklist shall be submitted to the Buyer for review and approval. The checklist shall include all contacts where application of voltage would fire a solenoid, actuate an air-operated valve, and change positions between switch contacts.

4.2.3 Pressure-Leak Test

The HEPA filter skid assembly piping and components shall be pressure-leak tested in accordance with the ASME B31.3 piping code for "Normal Fluid Service." A sensitive leak test in accordance with Section 345 of the piping code is required for all condensate drain piping; a soap bubble test has sufficient sensitivity.

Results shall be recorded and shall be submitted to the Buyer with test records/documents.

4.2.4 High-Efficiency Particulate Air Filter System Testing

Filters shall be installed to perform the following tests. The tests (below) may be performed concurrently as practicable.

4.2.4.1 Filter Housing Testing

1. The filter housing assembly, including inlet and outlet transitions, shall be visually inspected in accordance with the requirements of ASME N510 (Section 5). Observed deficiencies shall be documented on the inspection checklist and as a NCR if needed. A corrective action shall be noted and re-inspection results documented on the inspection checklist and on the NCR disposition. The Seller shall submit NCRs, as applicable, to the Buyer in accordance with the Bidder's Drawing and Data Commitments sheet (Appendix D).

2. The filter housings or test sections shall be tested for airflow distribution in accordance with the requirements of ASME N510 (Section 8). If similar equipment (duplicate in design, layout, and fabrication) has previously been qualified by this test, the results of this testing may be used to demonstrate airflow distribution qualification. Acceptance criteria shall be as given in ASME N510 (Section 8).

3. The filter housings or test sections shall be tested for air-aerosol mixing uniformity in accordance with the requirements of ASME N510 (Section 9). Qualification testing of sampling manifolds shall be conducted in accordance with ASME N509. Qualification testing of challenge aerosol injection manifolds shall be performed in accordance with ASME N510 (Section 9). If similar equipment (duplicate in design, layout, and fabrication) has previously been qualified by these tests, the results of this testing may be used to demonstrate manifold and air-aerosol mixing uniformity qualification. Acceptance criteria shall be as given in ASME N510 (Section 9).

4.2.4.2 High-Efficiency Particulate Air Filter System Structural Capability Tests

The HEPA filter ductwork and housings, complete assemblies, shall have a structural integrity test performed under vacuum. The structural integrity test shall be conducted in compliance with ASME AG-1 (Section SA-5400) and ASME N510 (Section 6). The Structural capability test pressure shall be performed at a Seller-determined value and the value demonstrated to meet the requirements stated in ASME AG-1.

4.2.4.3 Housing Leak Tests

Perform ductwork and housing leakage testing after the Structural Capability Test has been successfully completed. Leakage testing shall be in accordance with ASME AG-1 (Section SA-5300). Maximum allowable leakage shall be in accordance with ASME AG-1 (Table B-1310, Leakage Class I). The leak rate test pressure shall be specified by the Seller and verified as consistent with ASME AG-1 requirements.

The HEPA filter holding frames at each filter position shall be pressure-decay leak tested in accordance with the requirements of ASME N510 (Section 7). The leak rate shall not exceed 0.1 percent of the housing volume per hour at the system leak test pressure and as defined in ASME N509 (Section 4.6.4).

The filter housings shall be pressure-decay leak tested before HEPA filters are installed. Test shall be conducted to meet the requirements of ASME N510 (Section 6). The leak rate shall not exceed 0.1 percent of the housing volume per hour at the system leak test pressure and as defined in ASME N509 (Section 4.6.4).

A Buyer's representative may be present to witness the decay leak test of the housings. The Seller shall give a minimum of five days advance notice before performing the test(s).

4.2.4.4 Heat-Trace Check

This check will verify that the heat trace functions properly and in a safe manner.

4.2.4.5 Alarm Check

This check will verify that switches perform as required to specific set-point conditions.

4.2.5 Lift Tests

The fully assembled skid assembly shall be lifted from a horizontal position without incurring any damage. The lifting points shall be shown to account for the offset loads, such that the skid assembly hangs with its vertical axis within ten

degrees of vertical. All lifting accessories or components shall be load tested to 125 percent of the rated load capacity.

Verify the weight and center of gravity of the overall assembly.

4.2.6 Condensate Collection System Leak Test

Perform tests to verify that the Condensate Collection System does not leak via visual checks followed by a pressure decay test of the Primary Containment System. Secondary containment shall be tested by filling the secondary with water and then visually checking for signs of leakage.

4.2.7 Acceptance Criteria

Acceptance criteria will be defined after process testing at the Seller's facilities. It is expected that a FAT will be used to accept the skid assembly at point of shipment from the factory. The skid assembly will be shipped to Washington, at a location near the Hanford Site to be determined by the Buyer, where it will be installed by the Buyer. An acceptance test shall be performed by the Buyer.

4.2.8 Inspections

Specific inspections by the Buyer or Buyer's representative that may take place at the Seller's facilities include a suspect fasteners inspection before shipment of equipment. Electrical equipment installation and wiring practices will be subject to review by NEC® inspectors.

5 PRESERVATION AND DELIVERY

The following subsections provide the minimum requirements for packaging, labeling, handling, shipping, and receiving.

5.1 GENERAL

Every item that is shipped shall arrive at the jobsite in the same condition when it passed all quality control inspections and tests.

The equipment shall be prepared for delivery to the Buyer's specified site located near the U.S. Department of Energy's Hanford Site in Richland, Washington in a manner that can easily be inspected by the Buyer's personnel. The Seller shall be responsible for the equipment and associated components provided by the Seller through shipping and receiving of the equipment. The Seller shall be responsible for any damage that occurred during shipping.

The equipment will remain the property of the Seller until the Buyer has completed a receipt inspection at the Buyer's facility.

5.1.1 Packaging and Shipping Instruction Manual

The Seller shall prepare an instruction manual(s) that includes packaging information, handling information, shipping information, storage information, operational procedures, maintenance procedures, and special assembly procedures. The instruction manual(s) shall be submitted to the Buyer for approval before shipment.

A recommended spare parts list shall be prepared and provided to the Buyer.

5.1.2 Operation and Maintenance Manual

Provide an Operation and Maintenance Manual containing all information and procedures necessary to operate and maintain the HEPA filter skid assembly. Component manuals and other vendor data such as the following shall be provided, as applicable:

1. One-line diagram, layout drawings, schematic and wiring diagrams;

2. Illustrated parts lists with manufacturer catalog numbers;

3. Certified copy of factory test results;

4. Recommended maintenance schedule;

5. Maintenance procedures; and

6. Operating procedures.

Submit Operation and Maintenance Manual, component manuals, and other vendor data to the Buyer for approval before shipment.

5.2 PRESERVATION AND PACKAGING

Before packaging, all residual water present in the systems from acceptance testing shall be thoroughly drained and dried by purging oil-free dry air through the system. All open pipe ends shall be sealed to prevent ingress of debris and vermin into the system. The assembly shall be thoroughly cleaned to remove any dirt or dust that may have accumulated on the equipment during testing. Defects in the paint shall be touched-up. Moving parts shall be secured to prevent movement during shipping.

5.3 PACKING

1. The Seller shall package equipment to protect items during shipping. Bracing structures shall be installed where items could be damaged or vibrate loose during transportation. All bracing must be clearly identified, both in the packaging instruction and by labeling on the outside of the receipt tanks.

2. Rigging sketches or a handling procedure shall be prepared by the Seller for items that require special handling. These sketches will identify weights, sling locations, balance points, methods of attachment, and other information necessary for safe handling.

3. Packaging or preservative coatings shall be visually inspected after loading. Damaged areas shall be repaired. Items shipped with desiccants shall be inspected after loading to verify that seals are intact.

4. Cushioning shall be used where protection from shock and vibration is required. Cushioning materials shall have sufficient strength to provide the required protection, shall exhibit no corrosive effect when in contact with the item being cushioned, and shall not readily support combustion.

5. Temporary cushioning, blocking, bracing, or anchoring placed within an item for shipping protection that shall be removed before operation of the item, shall be identified by a warning(s) placed in a conspicuous manner to effect proper removal of the packing material.

6. Blocking and bracing used for protection of the load shall prevent item movement and withstand thrust and impact applied in any direction. Blocking and bracing used in direct contact with the item being blocked shall not have a corrosive effect on the item.

7. The weight, lifting points, or center of gravity indicated on the crate, skid, or package of major components shall be used to ensure proper handling during loading.

8. Written instructions covering the location and stacking limits of the crates or boxes on the transport vehicle shall be specified, as appropriate. These instructions should be marked on the container.

9. Precautions shall be taken to minimize marring of the finish of painted surfaces during handling and shipping, as practicable.

10. Cables, slings, chain falls, etc., shall not be placed where they can cause damage to any component part. Mating surfaces, machined areas, etc., shall be avoided.

11. All items shall be protected from the deleterious effects of shock, vibration, physical damage, moisture, salt spray, condensation, and weather during shipping, as applicable.

12. Items shall be inspected for cleanliness before packaging. Dirt, oil, residue, metal chips, or other forms of contamination shall be removed in accordance with Section 3.3.4. Any entrapped water shall be removed.

13. All openings into items shall be capped, plugged, and sealed with materials which perform their intended function without causing deleterious effects on the equipment or its operation.

14. Nonmetallic plugs and caps shall be brightly colored. Clear plastic caps or plugs are not to be used except when specified.

15. Plugs or caps shall be prevented from falling into, or being pushed into, openings after installation and shall be secured to prevent accidental removal.

16. Items subject to corrosion, either internal or external, shall be suitably protected.

17. Items packed in containers shall be blocked, braced, or cushioned to prevent physical damage.

18. Instrumentation, electrical and electronic equipment, motors, and other electrical assemblies and equipment shall be packaged in a waterproof enclosure. This may be the enclosure the item will operate in. For items without waterproof enclosures, a vapor barrier shall be placed around the enclosure. In either case, the enclosure shall be able to exclude dirt and facilitate handling and marking of the item. Barrier materials shall be nonhalogenated if used in contact with austenitic stainless steels, shall be noncorrosive, shall not readily support combustion, and shall not be, otherwise, harmful to the item being packaged. Desiccants may be used inside the enclosure or vapor barrier.

19. "Anchoring" of the item within a crate or on a skid means to adequately fasten the item during shipment and protect the item from potential damage as a result of rough handling. Bolting is preferred. When bolts are used for anchoring, the following criteria shall apply:

    a. If precision holes in the item are used for anchoring, properly fitting bolts shall be used to prevent marring or elongation of the holes.

    b. Items shall be marked to preserve identity during shipping, receiving, and storage per the following requirements:

        i. Identification shall be stamped, etched, stenciled, or otherwise marked on the item or on tags affixed to the item.

        ii. The marking shall not be deleterious to the material nor violate any other section of this specification.

        iii. When tags are employed, they shall be of material that will retain the marking and withstand weathering deterioration and other normal shipping and handling effects.

20. Items not specifically covered by these requirements shall be handled in accordance with sound material handling practices.

5.4 MARKING

Packages shall be properly and clearly marked. At a minimum, the required information shall include the contract number, the name and equipment number of the item within the package, the actual weight of the package and its contents, and the orientation of the equipment within the crate. Each package shall be labeled as part of the entire shipment, such as "Crate 1 of 2."

5.5 HANDLING

The Seller shall lift equipment using a forklift or crane, using the lifting points designed for that purpose.

5.6 SHIPPING

The Seller's truck driver shall carry bills of lading for each shippable unit that is delivered to the Buyer.

The Seller shall obtain approval to ship from the Buyer before the equipment is prepared for shipment.

5.7 RECEIVING

The Buyer's agent will perform a receipt inspection on receipt of the equipment at the Buyer's specified site.

This receipt inspection shall consist of the following:

1. Verify all parts are present and not damaged during shipping.

2. Documentation review—determine that documentation required by contract to accompany equipment is present and traceable to the equipment shipped as required by the Bidder's Drawing and Data Commitments sheet (Appendix D).

The Seller is responsible for accommodating the receipt inspection process by:

1. Designing and using packaging that allows for easy opening or disassembly to reveal the item(s) for inspection, then reclosing to permit the same packaging to be used for post-receipt transportation on the Hanford Site.

2. Selecting locations on equipment for identification numbers that promotes easy identification without extensive disassembly of packaging materials. It is preferred that packaging be marked to indicate the approximate position of identification numbers on equipment within the packaging.

3. Ensuring that all required documentation accompanying the equipment is present and obvious on, or within, the packaging.

6 NOTES

1. Unless otherwise specified, equipment furnished under this section shall be fabricated and installed in compliance with the instructions of the manufacturer.

2. The Seller shall ensure that all equipment, accessories, and installation materials comply with this specification and that adequate provision is made in the skid assembly design and fabrication for mounting the specified system equipment and accessories.

3. The Seller is solely responsible for construction means, methods, techniques, sequences, procedures, and safety precautions and programs.

4. The Seller shall provide all labor, equipment, and material required to provide a complete and functional system.

5. To avoid delays in construction, the Seller shall ensure that all components of the system are available to meet the required schedule.

6. The Seller shall obtain necessary permits, arrange for inspections, and obtain approval of the appropriate Seller's local "Authority Having Jurisdiction" over the work described.

7 APPENDICES

The following appendices make up part of this specification:

Appendices	Description
A	Drawings and Sketches
B	ASME AG-1 Compliance Matrix Example
C	Example Data Sheets
D	Bidder's Drawing and Data Commitments
E	TFC-ESHQ-Q_C-C-03, Revision B, *Control of Suspect/Counterfeit Items*
F	Request for Information
G	Instrumentation Naming and Tagging Convention

DMJM technology

amec

TECHNICAL SPECIFICATION

PROJECT:	Final DBVS Design	145579-D-SP-036	REV. 1
PROJECT NO.:	145579	OFF-GAS TREATMENT SYSTEM HEPA FILTER SKID ASSEMBLY DESIGN AND FABRICATION	
CLIENT:	AMEC E&E - Richland, Washington		

Appendix A

Drawings and Sketches

Drawing or Sketch	Revision	Sheet	Title
F-145579-00-A-0099	E	1	Bulk Vitrification P&ID "Typicals" Legend
F-145579-00-A-0100	G	1	Bulk Vitrification P&ID Symbol Legend
H-14-106796	0	1	Bulk Vitrification Off-Gas Area FDNS – Plans & Sections
DBVS-SK-E103	D	1	DBVS HEPA Filter Skid One-Line & Grounding Diagrams
DBVS-SK-M108	B	1	Bulk Vitrification HEPA Filter Skid Arrangement
DBVS-SK-P102	C	1	DBVS HEPA Filter Skid P&ID
			Total Drawing Pages including cover: 7

In making requests for transmittal of data by any electronic media, the Company receiving such data agrees that AMEC Americas Limited cannot be held responsible for users of the data outside of or beyond the scope of our original agreement. Also, because data stored in electronic media or transmitted by electronic means can deteriorate undetected or be modified without the consultant's knowledge, the Company receiving data agrees that AMEC Americas Limited cannot be held liable for the compatibility, completeness or correctness of the data.

TYPICAL # 01
PRESSURE TRANSMITTER

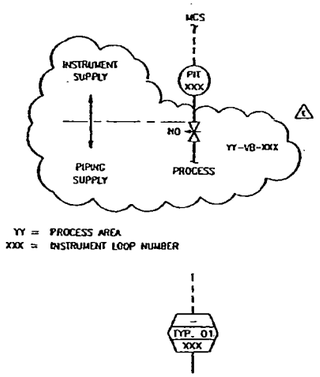

TYPICAL # 02
DIFFERENTIAL PRESSURE TRANSMITTER

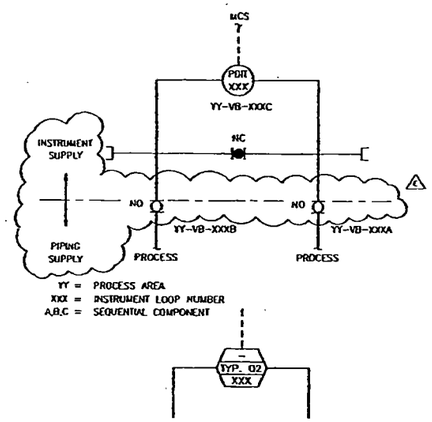

TYPICAL # 05
ISO TRAILER SPACE HEATER

TYPICAL # 03
FILTERED CONTAINER BREATHER WITH PRESSURE MONITORING

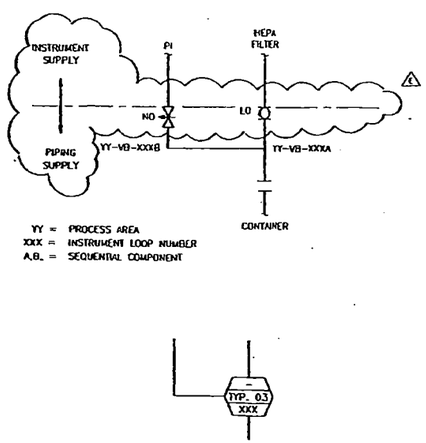

TYPICAL # 04
SEQUENCE CONTROLLED VALVE/GATE ACTUATOR

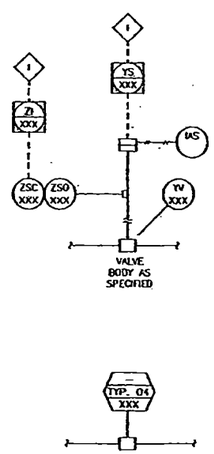

TYPICAL # 06
ISO TRAILER AIR CONDITIONING

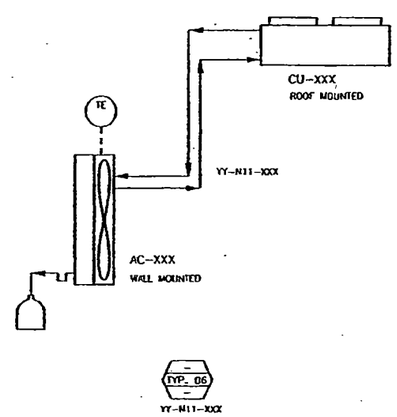

TYPICAL SYMBOL FOR LEGEND

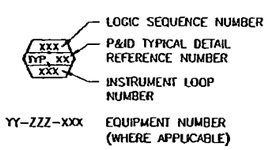

THIS DRAWING CONTAINS PROCESS INFORMATION THAT IS PROPRIETARY TO AMEC. RESTRICTIONS ON USE OF THIS INFORMATION ARE CONTAINED IN CONTRACT #23401 BETWEEN AMEC AND CH2M HILL HANFORD GROUP.

Rev.	REVISION DESCRIPTION	Date	By	Chk'd	Approved Design Auth	Approved Proj Mgr	DWG NO REV
E	ISSUED FOR GENERAL UPDATES & INFORMATION	03 NOV 04	AA	GM	FWS	TN	
D	ISSUED FOR VENDOR INFORMATION	8 Oct 04	NW	CCH	FWS	JDS	
C	ISSUED FOR APPROVAL	27 AUG 04	RDB	CCH	FWS	TN	
B	INTERNAL ISSUED FOR INFORMATION DRAWING NUMBER REVISED, WAS F-143643-00-A-0099 rA	23 JUL 04	JBH	CCH	FWS	JDS	
A	ISSUED FOR TASK 6 REPORT	7 APR 04	RDB	CCH	FWS	TN	

AMEC DRAWING NO: F-145579-00-A-0099 — REV: E

amec

AMEC PROJECT: 145579-FINAL DBVS DESIGN

U.S. DEPARTMENT OF ENERGY
Office of River Protection

BULK VITRIFICATION
P&ID
"TYPICALS" LEGEND

NAME	DATE	Company
DRAWN BY		
DESIGNED BY		
CHECKED BY		
REVIEW 2 DISCIPLINE		
DISCIPLINE MANAGER		
PROJECT MANAGER		
VENDOR AUTHORITY		

SIZE F — FILE NO — SHEET NO — DWG NO — REV — SCALE — CM — 8-CD1 — 48

DWG NO	TITLE	REF NUMBER	TITLE	REV	REV DATE	DESCRIPTION	REV BY	REV CK	CO-ORDER BY	CHCK
DRAWING TRACEABILITY LIST		REFERENCES		REVISIONS						
		NEXT USED ON								

EQUIPMENT

- CENTRIFUGAL PUMP
- METERING PUMP
- EXHAUST FAN
- MIXER/DRYER
- CONDENSER
- STORAGE BIN
- SELECTIVE CATALYTIC REDUCTION BED
- MIST ELIMINATOR
- VACUUM PUMP
- AIR COMPRESSOR
- SEALED TANK
- VENTURI SCRUBBER
- CCTV
- HEPA FILTER
- HEATER
- MOTOR
- FILTER
- VACUUM FILTER
- DOUBLE WALL TANK
- QUENCHER/SPRAY TOWER

EQUIPMENT (CONT'D)

- VANE SEPARATOR
- SINTERED METAL FILTER OR RECEIVER FILTER
- HYDRAULIC MOTOR
- LOAD CELL
- MIXER/AGITATOR
- CARTRIDGE FILTER
- HEAT EXCHANGER
- AIR DRYER
- FLEX CHUTE
- AIR DRIVEN DIAPHRAM PUMP

VALVE TYPES:

- GATE
- GLOBE
- CHECK
- BALL
- BUTTERFLY VALVE
- 3-WAY BALL
- PRESSURE REDUCING REGULATOR
- BACKPRESSURE REGULATOR
- CONTROL VALVE
- DISCRETE VALVE
- ANGLE VALVE (90°)
- SAFETY RELIEF VALVE (SRV)
- INSTRUMENT PLUG VALVE
- 3-WAY ANGLE
- PRESSURE RELIEF (PRV)
- SPHERICAL DISK VALVE
- STAR/ROTARY
- NEEDLE VALVE
- TURBINE TYPE FLOW ELEMENT
- DIVERGENCE VALVE (BY-PASS)
- DIVERGENCE VALVE (SINGLE)
- HAND KNIFE GATE
- EXTENTION HANDLE

MANUAL VALVE NOMENCLATURE

32-V-012
- SEQUENTIAL NUMBER
- PROCESS VALVE
- PROCESS AREA

32-VB-012B (USED IN "TYPICALS")
- SEQUENTIAL COMPONENT LOOP
- INSTRUMENT LOOP NUMBER
- INSTRUMENT BLOCK VALVE
- PROCESS AREA

ACTUATORS:

- SOLENOID
- CYLINDER (DISCRETE)
- DIAPHRAGM (ANALOG)
- AIR
- MOTOR

HVAC SYMBOLS

- AIR OPERATED DAMPER
- MANUAL OPERATED DAMPER
- MOTOR OPERATED DAMPER
- BACKDRAFT DAMPER

MEASURING ELEMENTS:

- FLOW ORIFICE
- FG — FLOW SIGHT GLASS
- LG — LEVEL SIGHT GLASS
- FI — FLOW INDICATOR (ROTAMETER)
- FIV — FLOW INDICATOR VALVED (ROTAMETER WITH ATTACHED VALVE)
- TE — TEMPERATURE ELEMENT (PENETRATION)
- TE — TEMPERATURE ELEMENT (SURFACE MOUNT)
- FCV — FLOW CONTROL VALVE
- FS — FLOW SWITCH

INSTRUMENT IDENTIFICATION:

In making requests for transmittal of data by any electronic media, the Company requesting such data agrees that AMEC Americas Limited cannot be held responsible for users of the data outside of or beyond the scope of our original agreement. Also, because data stored in electronic media or transmitted by electronic means can deteriorate undetected or be modified without the consultant's knowledge, the Company receiving data agrees that AMEC Americas Limited cannot be held liable for the compatibility, completeness or correctness of the data.

- CURRENT MCS TEXT
- CASS XXXX — CASS OCTAL NUMBER
- ASSOCIATED EQUIPMENT NO. — XX XXX
- INSTRUMENT ISA IDENTIFICATION
- MCS SHARED CONTROL OR DISPLAY YY-ZZZ-XXX
- XX XXX — INSTRUMENT ISA IDENTIFICATION
- ASSOCIATED EQUIPMENT NO.
- PANEL MOUNTED INSTRUMENT
- ELECTRICAL OR CONTROL SIGNAL
- XX XXX — LOCAL MOUNTED INSTRUMENT
- INSTRUMENT ISA IDENTIFICATION
- ASSOCIATED EQUIPMENT NO.
- ALPHA SUFFIX USED IN ASSOCIATED MELT SYSTEMS

"TYPICAL" IDENTIFICATION:

- XXX TYP. XX XXX — LOGIC SEQUENCE NUMBER; P&ID TYPICAL DETAIL REFERENCE NUMBER; INSTRUMENT LOOP NUMBER
- EQUIPMENT NUMBER (WHERE APPLICABLE)
- K — RELAY

INTERLOCK LEGEND:

- UNDEFINED INTERLOCK
- PROCESS AREA
- AREA TABLE
- TABLE MEMBER
- <XBC>
- STOP (CLOSE)
- DESIGNATES SOURCE
- START (OPEN)

- PRIMARY ELEMENT OR LOCALLY MOUNTED INSTRUMENT
- FRONT PANEL MOUNTED INSTRUMENT
- INSTRUMENT MOUNTED ON BACK OF PANEL
- INSTRUMENT FRONT PANEL MOUNTED AT AN AUXILIARY LOCATION
- LOCAL CONTROL
- COMPUTER FUNCTION
- MONITOR AND CONTROL SYSTEM (MCS) SHARED DISPLAY (VIDEO SCREEN) THROUGH PLC IN CONTROL ROOM
- PROGRAMMABLE LOGIC CONTROLLER PRIMARY LOCATION
- PROGRAMMABLE LOGIC CONTROLLER FIELD MOUNTED

CONVEYING FLUID — SHEET 2 — Z XX
- DRAWING CONTINUATION ARROW USED ONLY FOR LINES ENTERING OR LEAVING THE FACE OF THE DRAWING
- CONTINUATION DRAWING AND SHEET NUMBER
- DWG ZONE LOCATION

LINE NOMENCLATURE

4-STC-33-0152
- NOMINAL LINE SIZE (INCHES)
- FLUID ABBREVIATION
- AREA WHERE LINE ORIGINATES
- SEQUENTIAL NUMBER

NOTATIONS:

NNF	NORMALLY NO FLOW
LO	LOCKED OPEN
LC	LOCKED CLOSED
AOV	AIR OPERATED VALVE
AS	AIR SUPPLY
BB	BLOCK & BLEED
CA	COMPRESSED AIR
FC	FAIL CLOSED
FO	FAIL OPEN
FL	FAIL LAST
MOV	MOTOR OPERATED VALVE
NC	NORMALLY CLOSED
NO	NORMALLY OPEN
SOV	SOLENOID OPERATED VALVE
V	HAND VALVE
FW	FLUSH WATER
RCFD	REPLACEABLE CORE FILTER DRYER

LINE TYPES:

- MAJOR PROCESS LINE
- MINOR PROCESS LINE
- PNEUMATIC INSTRUMENT SIGNAL
- ELECTRICAL POWER OR SIGNAL
- DOUBLE CONTAINED LINES
- 212° — ELECTRIC HEAT TRACED OR INSULATED LINE @ TEMPERATURE
- PNEUMATIC CONVEYANCE BOOST LINES
- FP — ELECTRIC HEAT TRACED (FREEZE PROTECTION, INSULATED)
- HIH — HOSE IN HOSE CONTAINMENT LINE (HEAT TRACED, INSULATED)
- SKID BOUNDARY
- CONTROL (LOGIC) SIGNAL

MISCELLANEOUS SYMBOLS:

- PROCESS STREAM LABEL
- FLANGED CONNECTION
- SPRAY NOZZLE
- ANNUBAR
- SAMPLE C/W BOTTLE
- VORTEX SHEDDING FLOW ELEMENT
- STEAM TRAP
- LIQUID TRAP
- EXPANSION JOINT
- QUICK DISCONNECT
- M — MAG FLOW METER ELEMENT
- QUICK DISCONNECT WITH INTERNAL CHECK
- C — CORIOLUS MASS FLOW ELEMENT
- SLIDING JOINT
- TDV — TRIPLE DUTY VALVE
- STRAINER
- REDUCER (SIZE DEFINED ON P&ID)
- DIAPHRAM SEAL
- BACK FLOW PREVENTER
- FLEX HOSE
- RADIATION SENSING ELELMENT
- ALARM HORN
- RUPTURE DISK (PRESSURE RELIEF)
- FLOW ORIFICE
- INTERLOCK
- SCR — SILICON CONTROLLED RECTIFIER
- CONTAINED – PIPE CONNECTION PORT
- PIPING OR EQUIPMENT BOUNDARY MARKERS

ISA IDENTIFICATION LETTERS

	FIRST-LETTER		SUCCEEDING-LETTERS		
	MEASURED OR INITIATING VARIABLE	MODIFIER	READOUT OR PASSIVE FUNCTION	OUTPUT FUNCTION	MODIFIER
A	ANALYSIS		ALARM		
B	BURNER, COMBUSTION		USER'S CHOICE	USER'S CHOICE	USER'S CHOICE
C	CONDUCTIVITY	CONTROLLER		CONTROL	
D	DENSITY	DIFFERENTIAL/DETECTOR			
E	VOLTAGE		SENSOR (PRIMARY ELEMENT)		
F	FLOW RATE	RATIO (FRACTION)			
G	USER'S CHOICE		GLASS, VIEWING DEVICE		
H	HAND				HIGH
I	CURRENT (ELECTRICAL)		INDICATE		
J	POWER	SCAN			
K	TIME, TIME SCHEDULE	TIME RATE OF CHANGE		CONTROL STATION	
L	LEVEL		LIGHT		LOW
M	MOISTURE	MOMENTARY			MIDDLE, INTERMEDIATE
N	USER'S CHOICE		USER'S CHOICE	USER'S CHOICE	USER'S CHOICE
O	USER'S CHOICE		ORIFICE, RESTRICTION		
P	PRESSURE, VACUUM		POINT (TEST) CONNECTION		
Q	QUANTITY	INTEGRATE, TOTALIZE			
R	RADIATION		RECORD		
S	SPEED, FREQUENCY	SAFETY		SWITCH	SAMPLER
T	TEMPERATURE			TRANSMIT	
U	MULTIVARIABLE		MULTIFUNCTION	MULTIFUNCTION	MULTIFUNCTION
V	VIBRATION, MECHANICAL ANALYSIS			VALVE, DAMPER, LOUVER	
W	WEIGHT, FORCE		WELL		
X	MOTOR STARTER **	X AXIS	UNCLASSIFIED	UNCLASSIFIED	UNCLASSIFIED
Y	EVENT, STATE OR PRESENCE	Y AXIS		RELAY, COMPUTE, CONVERT	
Z	POSITION, DIMENSION	Z AXIS		DRIVER, ACTUATOR, UNCLASSIFIED	

** MOTOR STARTER, PUSH BUTTON, STATION

EQUIPMENT NOMENCLATURE

32-061-014
- EQUIPMENT NUMBER
- EQUIPMENT CODE
- PROCESS AREA

THIS DRAWING CONTAINS PROCESS INFORMATION THAT IS PROPRIETARY TO AMEC. RESTRICTIONS ON USE OF THIS INFORMATION ARE CONTAINED IN CONTRACT #23401 BETWEEN AMEC AND CH2M HILL HANFORD GROUP.

G	ISSUED FOR GENERAL UPDATES & INFORMATION	03 NOV 04	AA	BM	FWS	TH
F	ISSUED FOR VENDOR INFORMATION	8 Oct 04	AAY	CCH	FWS	JDS
E	ISSUED FOR APPROVAL	27 AUG 04	RDB	CCH	FWS	TH
D	INTERNAL ISSUED FOR INFORMATION DRAWING NUMBER REVISED, WAS F-143643-00-A-0100 rC	23 JUL 04	JBM	CCH	FWS	JDS
C	ISSUED FOR TASK 6 REPORT	7 APR 04	RDB	CCH	FWS	TH
B	ISSUED FOR COMMENT	27 FEB 04	JAY	CCH	FWS	JDS
A	ISSUED FOR INTERNAL REVIEW	9 FEB 04	RDB		FWS	
Rev.	REVISION DESCRIPTION	Date	By	Ch'd	Approved Proj. Eng.	Approved Proj. Mgr.

AMEC DRAWING NO: F-145579-00-A-0100 — REV: G

amec

AMEC PROJECT: 145579-FINAL DBVS DESIGN

U.S. DEPARTMENT OF ENERGY
Office of River Protection

BULK VITRIFICATION
P&ID
SYMBOL LEGEND

SIZE: F

DWG NO	TITLE
DRAWING TRACEABILITY LIST	

REF NUMBER	TITLE
REFERENCES	
NEXT USED ON	

REV	DESCRIPTION	CHECKED BY	CHKR
REVISIONS			

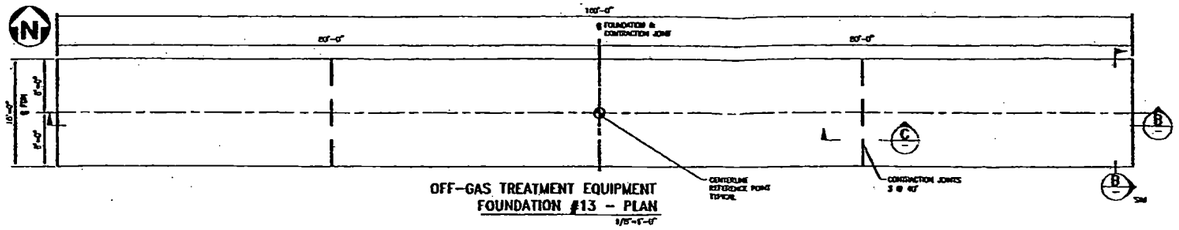

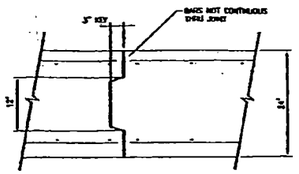

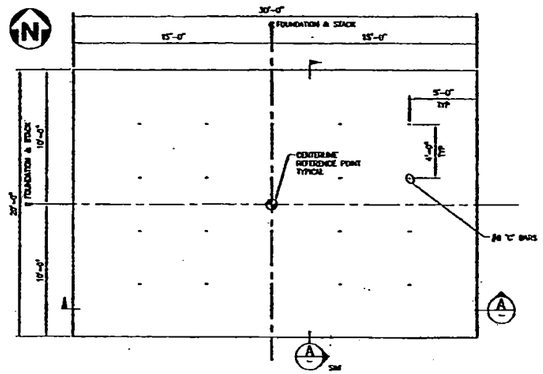

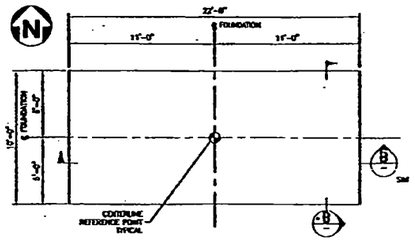

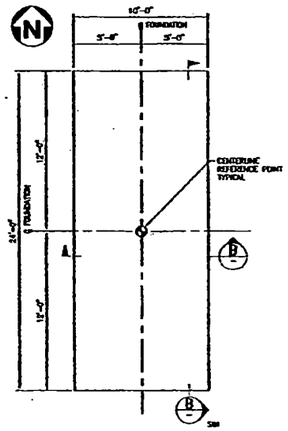

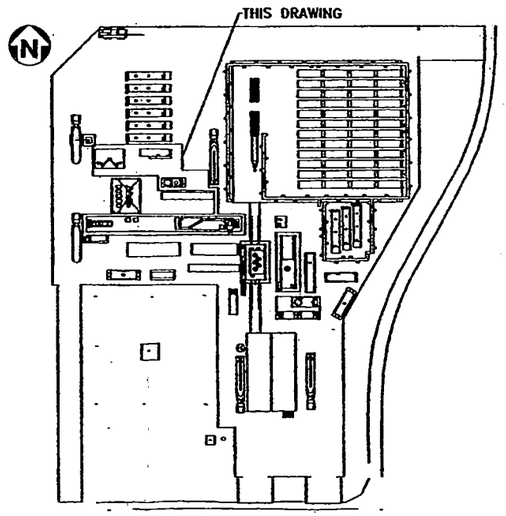

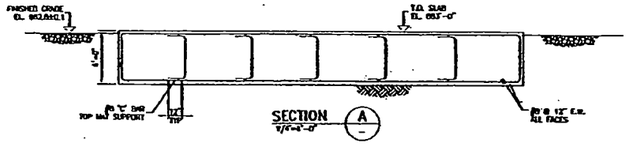

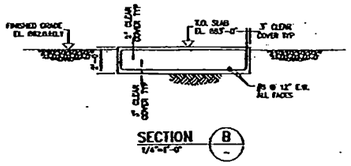

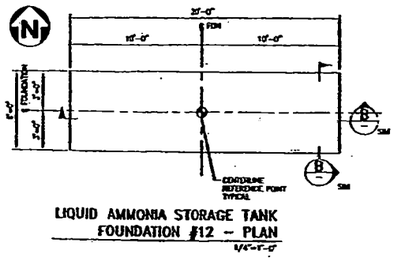

NOTES:

FOR GENERAL NOTES, DESIGN CRITERIA, MATERIAL SPECIFICATIONS, AND FOUNDATION LOCATIONS REFER TO DRAWING H-14-106789, "BULK VITRIFICATION – CIVIL SITE IMPROVEMENTS"

THIS DRAWING FORMERLY ISSUED AS AMEC DRAWING F-143643-00-C-0011.

DWG NO	TITLE
–	

DRAWING TRACEABILITY LIST

REF NUMBER	TITLE
NEXT USED ON H-14-106789	

REFERENCES

REVISIONS

NAME	
BROEKER	
WHITLEY	

amec

145579–FINAL DBVS DESIGN

U.S. DEPARTMENT OF ENERGY
Office of River Protection

BULK VITRIFICATION
OFF-GAS AREA
FDNS – PLANS & SECTIONS

SIZE	CODE NO	DWG NO	REV
F	2410	0900	H-14-106796 0

SCALE: AS SHOWN | 822145 | SHEET 1 OF 1

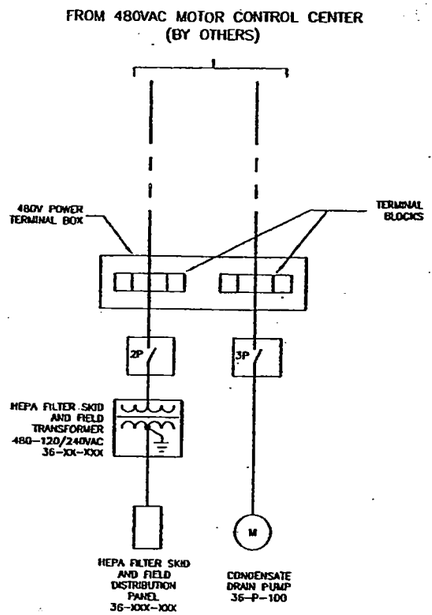

ONE-LINE DIAGRAM

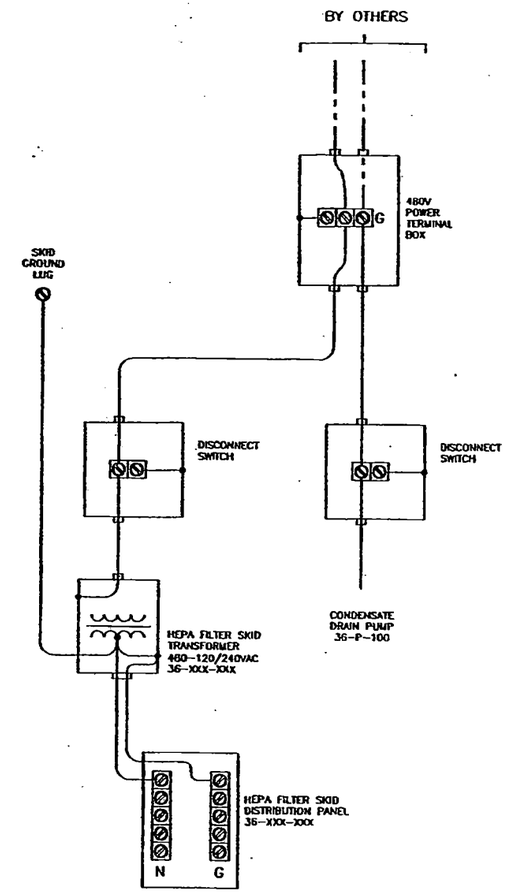

GROUNDING DIAGRAM

DMJM Technology

amec

145579-FINAL DBVS DESIGN

U.S. DEPARTMENT OF ENERGY
Office of River Protection

DBVS HEPA FILTER SKID ONE-LINE & GROUNDING DIAGRAMS

F | 200W | 7201 7301 | DBVS-SK-E103 | D

SCALE NONE

DWG NO | TITLE
DRAWING TRACEABILITY LIST

REF NUMBER | TITLE
REFERENCES
NEXT USED ON END ITEM

REVISIONS

NOTE:

1. SELLER TO LOCATE CONNECTION POINTS FOR DRAINS, COMPRESSED AIR AND FILTERED WATER. CP-404, CP-407 AND CP-408 NOT SHOWN.
2. SELLER TO LOCATE GROUNDING LUG.
3. SELLER TO LOCATE PANEL AND TERMINAL ENCLOSURE.
4. SELLER TO LOCATE CONDENSATE COLLECTION TANK AND PUMP.
5. SELLER TO SHOW LOCATION OF ALL COMPONENTS ON FABRICATION DRAWINGS.

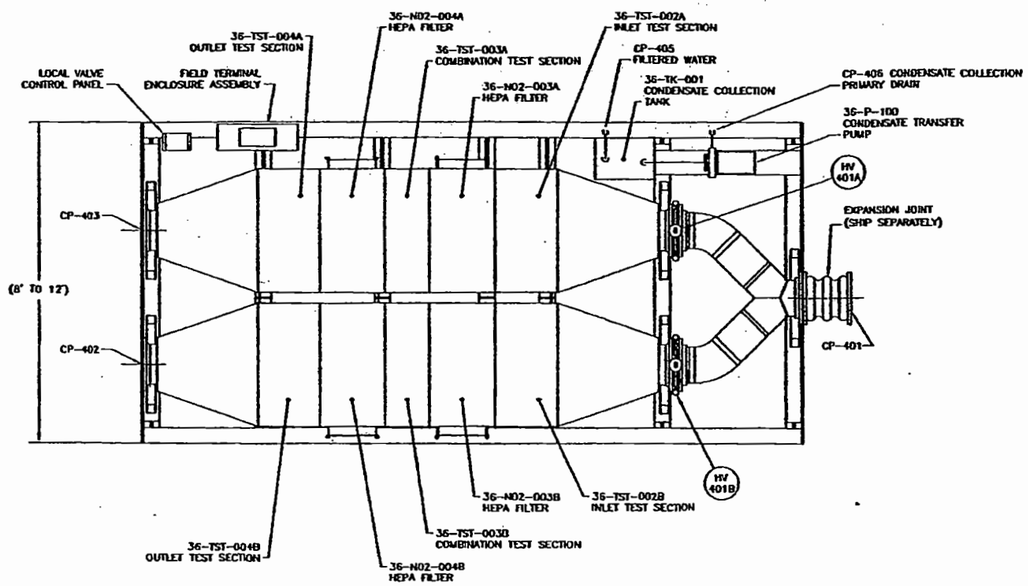

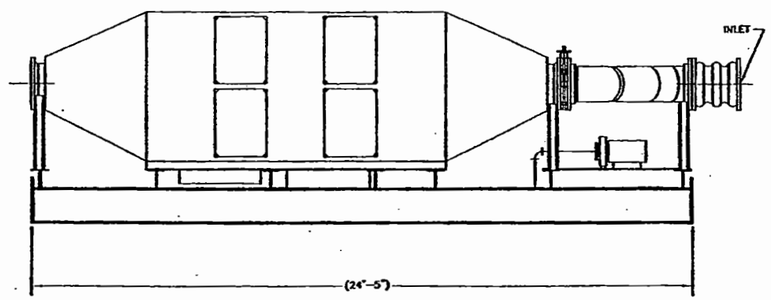

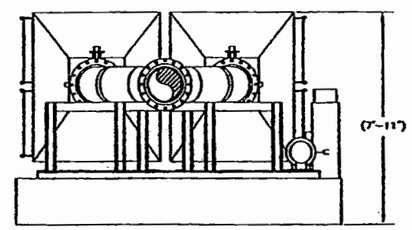

NOT APPROVED FOR CONSTRUCTION

DMJM Technology

B	ENGINEERING COMMENT
A	RELEASED FOR CLIENT REVIEW

REVISIONS

DRAWING TRACEABILITY LIST: DWG NO | TITLE

REFERENCES: REF NUMBER | TITLE

NEXT USED ON END ITEM

amec

NAME

145579-FINAL DBVS DESIGN

U.S. DEPARTMENT OF ENERGY
Office of River Protection

BULK VITRIFICATION
HEPA FILTER SKID
ARRANGEMENT

F | 241G | 7100 | DBVS-SK-M108 | B

SCALE NONE

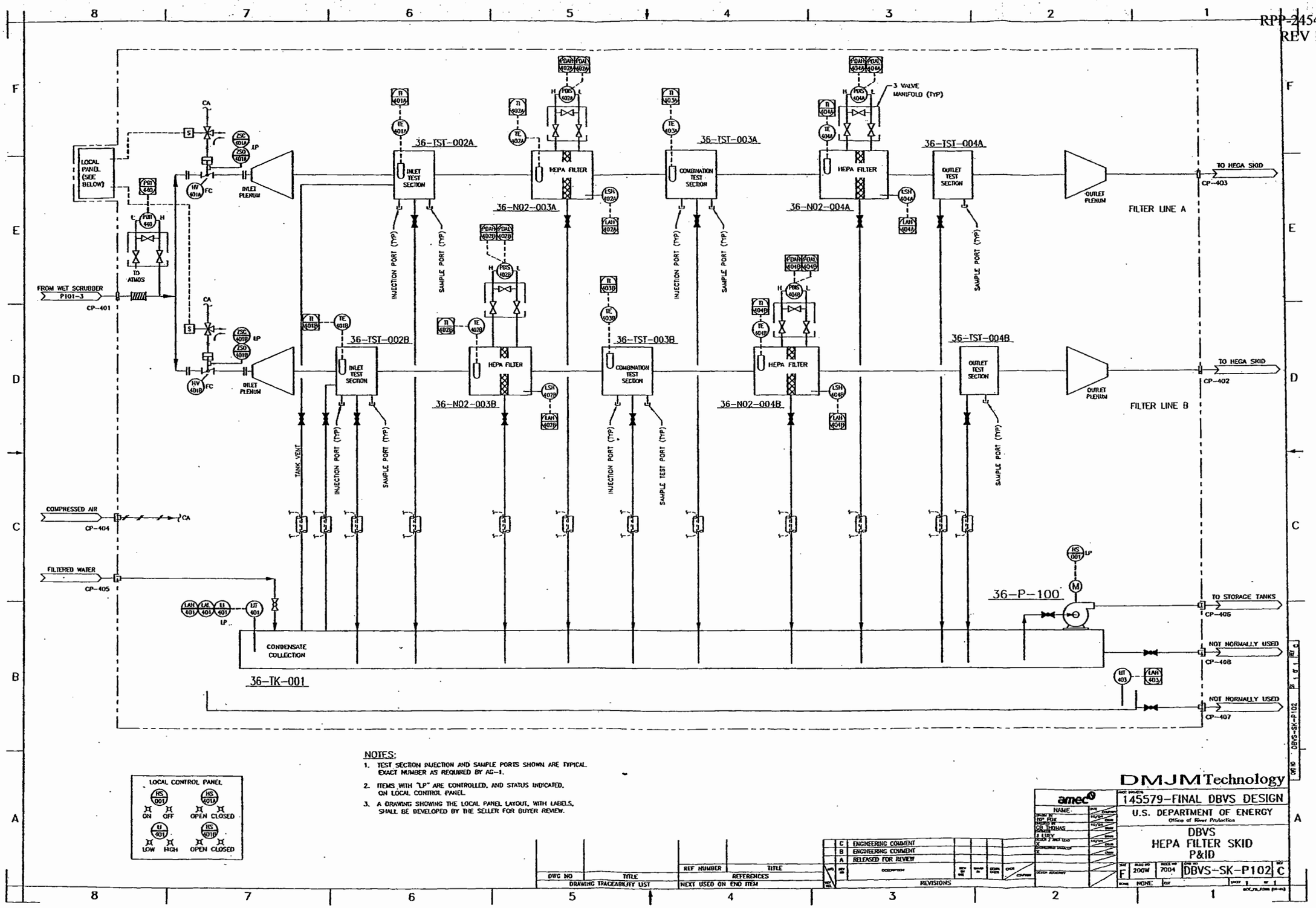

NOTES:

1. TEST SECTION INJECTION AND SAMPLE PORTS SHOWN ARE TYPICAL. EXACT NUMBER AS REQUIRED BY AG-1.
2. ITEMS WITH "LP" ARE CONTROLLED, AND STATUS INDICATED, ON LOCAL CONTROL PANEL.
3. A DRAWING SHOWING THE LOCAL PANEL LAYOUT, WITH LABELS, SHALL BE DEVELOPED BY THE SELLER FOR BUYER REVIEW.

DMJM Technology

amec

145579-FINAL DBVS DESIGN

U.S. DEPARTMENT OF ENERGY
Office of River Protection

DBVS
HEPA FILTER SKID
P&ID

DBVS-SK-P102 C

DWG NO	TITLE	REF NUMBER	TITLE
DRAWING TRACEABILITY LIST		REFERENCES	
		NEXT USED ON END ITEM	

C	ENGINEERING COMMENT	
B	ENGINEERING COMMENT	
A	RELEASED FOR REVIEW	

REVISIONS

DMM technology

amec

TECHNICAL SPECIFICATION

PROJECT:	Final DBVS Design	145579-D-SP-036	REV. 1
PROJECT NO.:	145579	OFF-GAS TREATMENT SYSTEM HEPA FILTER SKID ASSEMBLY DESIGN AND FABRICATION	
CLIENT:	AMEC E&E - Richland, Washington		

Appendix B

ASME AG-1 Compliance Matrix Example

(129 pages including cover)

Requirement Number	Source	Requirement Text	Verification/Validation R - Review A - Analysis T - Test I - Inspection	Design Document Reference (Where is this requirement incorporated in the design)
	AG-1, 2003 Edition	CODE ON NUCLEAR AIR AND GAS TREATMENT		
	AA	SECTION AA: COMMON ARTICLES		
	AA-3000	MATERIALS		
1	AA-3000	Each section of this Code delineates material requirements applicable to that section. In addition, the materials listed in Section III of the ASME Boiler Pressure Vessel Code (hereafter referred to as the ASME Code) are acceptable materials. The ASME or ASTM numbers for acceptable materials designate a chemical composition and a material thickness limit. A grade designation is usually required to determine the minimum strength of the material. If the specific grade material has an assigned minimum yield and tensile strength, these values shall be used for design purposes. If values have not been established and assigned, then tests in accordance with the procedures outlined in ASTM A 370 shall be performed to obtain these values. Results of mill certified tests performed as above designating these values shall be calculated by the procedures in AA-4000.		
	AA-4000	STRUCTURAL DESIGN		
2	AA-4100	*Scope:* This Article contains the minimum requirements for design of equipment for which this Code is applicable. Nonmandatory Appendices AA-A through AA-D contain guidance on implementing these rules.		
3	AA-4110	*Environmental Qualifications:* Electrical equipment shall be qualified to meet the environmental conditions specified for the equipment in Divisions II and III of this Code.		
4	AA-4200	*Design Criteria:* This Subarticle contains the load, stress, deflection, and other criteria for the design of equipment. Verification of equipment design shall be based on calculations or tests, or a combination of both.		
5	AA-4210	*Load Criteria:* All loads as specified in the Design Specification or the applicable equipment section of this Code shall be taken in account in designing equipment and shall include, but not be limited to, the loads listed in AA-4211.		
6	AA-4211	*Loads:* additional dynamic loads (ADL): loads resulting from system excitation due to structural motion caused by safety relief-valve actuation and other hydrodynamic loads due to design basis ccident (DBA), small pipe break accident (SBA), and intermediate pipe break accident (IBA); also, liquid slosh in tanks and vessels and mechanical shock loads. constraint of free end displacement loads (T): loads caused by constraint of free end displacement that results from thermal or other movements. dead weight (DW): the weight of equipment or ductwork including supports, stiffeners, insulation, all internally or externally mounted components or accessories, and any contained fluids. design pressure differential (DPD): dynamic pressure loads resulting from a DBA, IBA, or SBA. design wind (W): loads due to design humcane, design tornado, or other abnormal meteorological condition that could occur infrequently.		
7	AA-4211	external loads (EL): applied loads caused by attached piping, accessories, or other equipment. fluid momentum loads (FML): loads other than those listed here, such as the momentum and pressure forces due to fluid flow. live loads (L): loads occumng during constniction and maintenance and loads due to snow, ponded water, and ice. normal loads (N): loads consisting of normal operating pressure differential, system operating pressure transients, dead weight, external loads, and inertia loads. N = NOPD+SOPT+DW+EL+FML normal operating pressure differential (NOPD): the maximum positive or negative pressure differential that may occur during normal plant operation, including plant st		
8	AA-4211	seismic loads: loads that are the result of either an operating basis earthquake (OBE) or safe shutdown earthquake (SSE). Both orthogonal components of the horizontal seismic excitation are applied simultaneously with the vertical seismic loading. These seismic forces are applied in the directions that produce worst-case stresses and deflections. system operational operational transient (SOPT): pressure transient loads due to events such as rapid damper, plenum or housing door, and valve closure, or other normal loads that result in a short duration pressure differential.		
9	AA-4212	*Load Combinations:* The load combinations to be considered for equipment design are given in Table AA-4212.		

Requirement Number	Source	Requirement Text	Verification/Validation R - Review A - Analysis T - Test I - Inspection	Design Document Reference (Where is this requirement incorporated in the design)
10	AA-4212	*Table AA-4212, Load Conditions:* Component Service Level — Load Combination A — N + T N + L B — N + N + T and N + OBE + T + ADL C (Note (1)) — N + N + T and N + SSE + ADL D — N + DFD + SSE + ADL General Notes: (a) Constraint of free end displacement loads, external loads, additional dynamic loads, and fluid momentum loads are associated with the service level of concern and are not, in general, the I V same for all service levels. (b) If particular equipment design criteria require additional load combinations, those reauirements shall be stated in the equipment design speclofication. (1) The SSE loading in Service Level C may be replaced with the OBE loading if component operability is required during or after a seismic event and operability can be assured by test or analysis.		
11	AA-4213	*Service Conditions:* The equipment Design Specification or the applicable equipment section of this Code shall identify the loads and shall designate the appropriate design and service limits for design of equipment systems. The design and service loads shall be established considering all plant and system operating conditions anticipated or postulated to occur during the intended service life of the equipment systems.		
12	AA-4214	*Design and Service Limits*		
13	AA-4214.1	*Design Limits. The limits ror design loading are designated as design limits.*		
14	AA-4214.2	Service Limits. The equipment design specification may designate service limits as defined in (a) throuh (d) below. (a) Level A Service Limits. Level A service limits are those sets of limits that must be satisfied for all loads identified in the equipment design specification to which the equipment may be subjected in the performance of its specified normal service function. (b) Level B Service Limits. Level B service limits are those sets of limits that must be satisfied for all loads identified in the equipment design specification for which these service limits are designated. Equipment must withstand load combinations specified for -Level B service limits without damage that would require repair. (c) Level C Service Limits. Level C service limits are those sets of limits that must be satisfied for all loads identified in the equipment design specification for which these service limits are designated. These sets of limits permit large deformations in areas of structural discontinuity. (d) Level D Service Limits. Level D service limits are those sets of limits that must be satisfied for all loads identified in the equipment design specif		
	AA-4220	STRESS CRITERIA		
15	AA-4221	*Stress Limits:* The maximum normal stress limits for the service levels defined in AA-4212 are stipulated in AA-4320 and AA-4330.		
	AA-4230	DEFLECTION CRITERIA		
16	AA-4231	*Deflection Limits:* The maximum deflection d_{max}, including all equipment tolerances, that may be sustained so that equipment function is not impaired shall be determined. This maximum deflection may be defined in the equipment Design Specification or the applicable equipment section of this Code. Alternatively, it may be determined by analysis or test, or both. The allowable deflections for the load combinations of AA-4212 are as shown in Table AA-4231.		

Requirement Number	Source	Requirement Text	Verification/Validation R - Review A - Analysis T - Test I - Inspection	Design Document Reference (Where is this requirement incorporated in the design)
17	AA-4231	*Table AA-4231, Deflection Limits* [1,2]: Service Level — Deflection Limit A [Note (1)] — $d_{A} \leq 0.6\ d_{max}$ B [Note (1)] — $d_{B} \leq 0.6\ d_{max}$ C [Note (2)] — $d_{C} \leq 0.9\ d_{max}$ D [Note (2)] — $d_{D} \leq 0.9\ d_{max}$ General Notes: (a) If particular equipment design criteria require more restrictive limits on deflections, those requirements will be stated in the applicable equipment section of this Code. (b) Deflections shall be limited to prevent transmission of excessive load to other components such as filter frames, coils, bearings, and access doors. Notes: (1) Deflections shall be limited to values that prevent buckling in primary load carrying elements. (2) Deflections shall be limited to values as described in AA-4323.		
	AA-4240	OTHER CRITERIA		
18	AA-4241	*Vibration Isolation:* Types of vibration isolation devices and their efficiencies shall be as specified in the equipment Design Specification or the applicable equipment section of this Code. Vibration isolation devices shall be designed with adequate restraints to resist the loads generated under any service level.		
19	AA-4242	*Provisions for Relative Movement:* Consideration shall be given to the relative motion between equipment systems and their supporting elements, as this will affect ability to function. When clearances or travel ranges, or both, are required to accommodate movements of equipment systems and their supporting elements, sufficient design margins shall be introduced to allow for fabrication and installation tolerances.		
20	AA-4243	*Structural Attachments:* Structural attachments may be of either the integral or nonintegral type, as defined in AA-4243.1 and AA-4243.2.		
21	AA-4243.1	*Integral Attachments:* (a.) Integral attachments are those fabricated as an integral part of the equipment. Consideration shall be given to local stresses induced in equipment by integral attachments. (b.) Integral items used as part of an assembly for the support or guiding of the equipment may be welded directly to the equipment, provided the design is adequate for all applicable service conditions and load combinations set forth in AA-4212 and the requirements of AA-6300 are met.		
22	AA-4243.2	*Nonintegral Attachments:* Nonintegral attachments are those that are bolted, pinned, clamped to, or bear on the equipment. Consideration shall be given to the mechanical connection and local stresses induced in the equipment by nonintegral attachments.		
	AA-4300	DESIGN OF EQUIPMENT SYSTEMS AND THEIR SUPPORTING ELEMENTS		
	AA-4310	GENERAL REQUIREMENTS		
23	AA-4311	*Acceptability:* The requirements for acceptability of the design of equipment systems and their supports are given in AA-4311.1 through AA-4311.3.		
24	AA-4311.1	The design shall be such that the allowable stresses will not exceed the limits given in this Subarticle. Design stress values S, yield strength S_y, and ultimate strength S_u, are given in AA-3000 references. These values form the basis for determining allowable stress, depending on analysis type.		
25	AA-4311.2	For self-limiting loads under Service Level D, localized material yielding is permitted, provided that yielding does not form a mechanism that would result in collapse of the structure.		
26	AA-4311.3	For configurations where compressive stresses occur, critical buckling shall be considered.		
	AA-4312	BASIS FOR DETERMINING STRESSES IN DESIGN BY ANALYSIS		
27	AA-4312	The theory of failure for combining stresses for the design of equipment systems and their supporting elements used in the rules of this subarticle is the maximum stress theory. In the maximum stress theory, the controlling stresses are the membrane and bending stresses.		

Requirement Number	Source	Requirement Text	Verification/Validation R - Review A - Analysis T - Test I - Inspection	Design Document Reference (Where is this requirement incorporated in the design)
28	AA-4312.1	*Plate- and Shell-Type Components -- Analysis Procedures:* The analysis procedures for plate- and shell-type systems shall be in accordance with the rules of AA-4320. Consideration shall be given to the governing mode of failure. Several analyses that might include, but are not necessarily limited to, the following may be required to determine the limiting case: (a) elastic analysis based on maximum stress theory; (b) elastic analysis based on maximum deflection; (c) elastic analysis based on allowable buckling stress (see AA-4323).		
29	AA-4312.2	*Linear-Type Systems and Supports -- Analysis Procedures:* Elastic analysis based on maximum stress theory in accordance with the rules of AA-4330 shall be used for the design of linear-type systems.		
30	AA-4312.3	*Applicability of Mathematical Analysis:* The design procedure that may be used shall be either analysis or test, or a combination, and is dependent upon the nature of the structural system under consideration. The choice shall be based on the practicality of the method for the type, size, shape, and complexity of the equipment, and the reliability of the conclusions. The analysis method is not recommended for complex equipment that cannot be modeled to correctly describe the static and dynamic structural characteristic of the equipment. Furthermore, analysis without testing may be acceptable only if structural integrity alone can assure the design intended function. If mathematical analysis is inadequate for all or part of the design verification, a suitable test program shall be implemented in accordance with the rules of AA-4350.		
31	AA-4313	*Terms Related to Design by Analysis:* The terms used in the design of equipment systems and their supports are shown in AA-4313.1 through AA-43 13.11.		
32	AA-4313.1	*Gross Structural Discontinuity.* Gross structural discontinuity is a geometric or material discontinuity that affects the stress or strain distribution throughout the entire thickness of the member. Gross discontinuity-type stresses are those portions of the actual stress distributions that produce net bending and membrane force resultants when integrated through the thickness. Examples of gross structural discontinuities are junctions between parts of different diameters or thicknesses, and flange-to-shell junctions.		
33	AA-4313.2	*Normal Stress.* Normal stress is the component of stress normal to the plane of reference, also referred to as the direct stress. Usually the distribution of normal stress is not uniform throughout the thickness of a part. Therefore, the normal stress is considered to be made up of two components, one of which is uniformly distributed and equal to the average value of stress across the thickness under consideration, and the other of which varies from this average value with the location across the thickness.		
34	AA-4313.3	*Membrane Stress.* Membrane stress is the component of normal stress that is uniformly distributed and equal to the average of stress across the thickness of the section under consideration.		
35	AA-4313.4	*Bending Stress.* Bending stress is the variable component of normal stress described in AA-4313.2. The variation may or may not be linear across the thickness.		
36	AA-4313.5	*Shear Stress.* Shear stress is the component of stress tangent to the plane of reference.		
37	AA-4313.6	*Primary Stress.* Primary stress is any normal stress or a shear stress developed by an imposed loading that is necessary to satisfy the laws of equilibrium of external and internal forces and moments. The basic characteristic of a primary stress is that it is not self-limiting. Primary stresses that considerably exceed the yield strength will result in failure or, at least, in gross distortion. A general primary membrane stress is one that is so distributed in the structure that no redistribution of load occurs as a result of yielding. An example of primary stress is general membrane stress in a circular cylindrical shell due to distributed live loads.		
38	AA-4313.7	*Secondary Stress.* Secondary stress is a normal stress or a shear stress developed by the constraint of adjacent material or by self-constraint of the structure. The basic characteristic of a secondary stress is that it is self-limiting. Local yielding and minor distortions can satisfy the conditions that cause the stress to occur, and failure from one application of the stress is not to be expected. An example of secondary stress is bending stress at a gross structural discontinuity.		
39	AA-4313.8	*Peak Stress.* A peak stress includes an increment added to primary or secondary stresses by a stress riser, such as a notch.		
40	AA-4313.9	*Free End Displacement.* Free end displacement consists of the relative motions that would occur between an attachment and connected structure or equipment if the two members were separated. Examples of such motions are those that would occur because of relative thermal expansion of ductwork, piping, equipment, and equipment supports, or because of movements imposed upon the equipment by sources other than the piping.		
41	AA-4313.10	*Limit Analysis.* Limit analysis is a method used to compute the maximum load or combination of loads a structure made of ideally plastic (nonstrain hardening) material can carry. Among the methods used in limit analysis is a technique that assumes elastic, perfectly plastic, material behavior, and a constant level of moment or force in those redundant structural elements in which the level of membrane yield, plastic hinge formation, or critical buckling load in the member has been reached. Any increase in load must be accompanied by a stable primary Structure until a failure mechanism defined by the lower bound theorem of limit analysis is reached in the primary structure.		
42	AA-4313.11	*Collapse Load:* Lower Bound. The collapse load is the load at which deformations of an ideally plastic structure increase without bound. If, for a given load, any system of stresses can be found that everywhere satisfies equilibrium and nowhere exceeds the material yield strength, the load is at or below the collapse load. This is the lower bound theorem of limit analysis, which permits calculation of a lower bound to the collapse load.		

Requirement Number	Source	Requirement Text	Verification/Validation R - Review A - Analysis T - Test I - Inspection	Design Document Reference (Where is this requirement incorporated in the design)
	AA-4320	DESIGN VERIFICATION OF PLATE- AND SHELL-TYPE COMPONENTS AND THEIR SUPPORTING ELEMENTS		
43	AA-4321	*Stress Analysis:* A detailed stress analysis of all major structural plate and shell-type components and their supporting elements shall be prepared in sufficient detail to show that each of the stress limitations of Table AA-4321 is satisfied when the component and its supporting elements are subjected to the load combinations of AA-4212.		
44	AA-4321	*Table AA-4321, Plate- and Shell-Type Components -- Primary Stress Allowables* Stress Category Service Level — General Membrane σ_1 [Note (1)] — Membrane and Bending $\sigma_1 + \sigma_2$ [Note (2)] A — 1.0 S [Note (3)] — 1.5 S B — 1.0 S — 1.5 S C — 1.2 S — 1.8 S D — Less of 1.5 S or 0.4 S_u [Note (3)] — Lesser of 2.25 S or 0.6 S_u Notes: (1) General membrane stress σ_1 is the average membrane stress across the solid section, excluding discontinuities and concentrations. (2) Bending stress σ_2 is the linearly varying portion of stress across the solid section under consideration, excluding effects of discontinuities and concentrations. (3) S = design stress S_U = ultimate stress See AA-3000 references.		
45	AA-4322.1	*Design Loads:* The maximum normal stress limits are satisfied for the design loading combinations as stipulated in AA-4212, or as stated in the equipment Design Specification if the requirements of Eq. (1) and (2) are met (see AA-4322.2 for service limits associated with the service levels of AA-4212). $\sigma_1 \leq 1.0S$ (1) $\sigma_1 + \sigma_2 \leq 1.5S$ (2) where S = design stress value from AA 3000 references σ_1 = membrane stress σ_2 = bending stress		
46	AA-4322.2	*Service Limits:* The maximum normal stress limits for Service Levels A through D are as stipulated below.		
47	AA-4322.2	(a) Level A service limits are satisfied for the service conditions of AA-4214.2(a) for which these limits are designated in the equipment Design Specification if the requirements of Eqs. (1) and (2) are met.		
48	AA-4322.2	(b) Level B service limits are satisfied for the service conditions of AA-4214.2(b) for which these limits are designated in the equipment Design Specification if the requirements of Eqs. (1) and (2) are met.		
49	AA-4322.2	(c) Level C service limits are satisfied for the service conditions of AA-4214.2(c) for which these limits are designated in the equipment Design Specification if the requirements of Eqs. (1) and (2) are not exceeded by more than 20%.		
50	AA-4322.2	(d) Level D service limits are satisfied for the service conditions of AA-4214.2(d) for which these limits are designated in the equipment Design Specification if the requirements of Eqs. (3) and (4) are met. $\sigma_1 \leq$ lesser of 1.5S or 0.4 S_u (3) $\sigma_1 + \sigma_2 \leq$ lesser of 2.25S or 0.6 S_u (4) where S_u = specified minimum ultimate tensile strength of material found in AA-3000 references. Other terms are as defined in AA-4322.1.		
51	AA-4323	*Buckling and Stress Limits Set by Buckling Stress Criteria:* The allowable deflection due to compressive loads shall be limited to prevent postbuckling failure in the plate. Buckling stresses shall be verified against Service Level D allowable values of Table AA-4323.		

Requirement Number	Source	Requirement Text	Verification/Validation R - Review A - Analysis T - Test I - Inspection	Design Document Reference (Where is this requirement incorporated in the design)
52	AA-4332	*Table AA-4323, Linear-Type Systems -- Primary Stress Allowables* Stress Category Service Level — General Load Induced Stress — Stress From Constraint of Free End Displacements A — $\hat{S}$ [Note (1)] — 3 $\hat{S}$ B — $\hat{S}$ — 3 $\hat{S}$ C [Note (2)] — 1.5 $\hat{S}$ — Not Applicable D [Note (2)] — 1.2 S_y/F_t * $\hat{S}$ not to exceed 0.7 S_u/F_t * $\hat{S}$ — Not Applicable Notes: (1) $\hat{S}$ refers to the primary allowable stresses developed in the ASME Code, Section III, Appendix XVII, XVII-2211 through XVII-2214. S_Y = yield stress S_U = ultimate stress F_t = allowable tensile stress Values are found in AA-3000 references (2) Loads shall not exceed 0.67 times the critical buckling load of the primary framing system.		
53	AA-4323.1	*Local Yielding and Buckling:* The maximum stress for the load carrying capacity of plates shall be based on the post-buckling behavior of the plate. (a) When buckling governs, deflections shall be computed based on effective width concept. (b) When local yielding governs, deflections shall be computed based on the average or reduced section.		
54	AA-4323.2	*Lateral Buckling:* Critical lateral buckling stresses shall be computed based on moment resisting capacity.		
55	AA-4323.3	*Flexural Buckling:* Maximum stresses shall be computed based on stability considerations.		
56	AA-4323.4	*Torsional Buckling:* Maximum shear stresses shall be computed based on the torsional capacity of the section.		
	AA-4330	DESIGN VERIFICATION OF LINEAR-TYPE SYSTEMS BY ANALYSIS		
57	AA-4331	*Stress Analysis:* A detailed stress analysis of all major linear-type equipment shall be prepared n sufficient detail to show that each of the stress limitations of AA-4332 is satisfied when the equipment is satisfied when the equipment is subjected to the load combinations of AA-4212.		
	AA-4332	STRESS LIMITS		
58	AA-4332.1	*Design Level A and B Limits:* Design Level A and Level B limits are identical and are given in the ASME Code, Section III, Appendix XVII. The allowable stress for the combined mechanical loads and effects that result from constraint of free end displacements (see AA-4313.6) but not thermal or peak stresses, shall be limited to three times the stress limits of the ASME Code, Section III, Appendix XVII, XVII-2000.		
59	AA-4332.2	*Level C Limits:* The stress values for Level C limits may be increased by 50% over the values given in the ASME Code, Section III, Appendix XVII, XVII-2000. Constrained free end displacement and differential support motion effects need not be considered. Primary stresses shall not exceed 0.67 times the critical buckling strength of the primary framing system. In such analysis, local instabilities, such as compression, flange, and web buckling shall be evaluated.		
60	AA-4332.3	*Level D Limits:* If the equipment Design Specification specifies service loads for which level D limits are designated, the following rules shall be used in evaluating them independently of all other design and service loadings. (a) The allowable stresses presented in the ASME Code, Section III, Appendix XVII, XVII-2000, may be increased by a factor of 1.2 (S_y/F_t), but not to exceed a factor of 0.7 (S_u/F_t), where S_y is the specified minimum yield strength of the material, F_t is the allowable tensile stress, and S_u is the ultimate tensile stress. (b) Primary stresses shall not exceed 0.67 times the critical buckling strength of the primary framing system. In such analysis, local instabilities such as compression, flange, and web buckling shall be evaluated. In addition, overall buckling in compression members shall also be evaluated.		
	AA-4340	FUNCTIONABILITY REQUIREMENTS		

Requirement Number	Source	Requirement Text	Verification/Validation R - Review A - Analysis T - Test I - Inspection	Design Document Reference (Where is this requirement incorporated in the design)
61		The stress limits specified by this Code do not assure that the equipment will be able to perform the required safety function. Functionability is assured by following the rules stipulated below.		
62	AA-4341	*Functionability of Mechanical Systems:* The methods of AA-4341.2, AA-4341.2, or AA-4341.2 shall be used to assure operability of mechanical systems and their supporting elements.		
63	AA-4341.1	The Service Levels C and D stress limits of AA-4322 and AA-4332 shall be reduced to the Levels B and C limits, respectively.		
64	AA-4341.2	The deflections at all critical locations shall be calculated and assured to be within the allowable values in AA-4230. These critical locations shall be given in the applicable equipment section of this Code or by the equipment Design Specification, or by both. Furthermore, for equipment where buckling is of concern, deflection checks shall be performed for the component or support load condition as specified in AA-4323.		
65	AA-4341.3	The functionability of the equipment shall be verified experimentally.		
66	AA-4342	*Functionability of Electrical Systems:* Operability of electrical systems and their supporting elements shall be assured using the method outlined in AA-4350.		
	AA-4350	DESIGN VERIFICATION BY TESTING		
67	AA-4351	*General:* Design verification by testing shall be in accordance with the rules of this Subarticle. Seismic tests are to be performed by subjecting the equipment to vibratory motion that conservatively simulates that postulated at the equipment mounting during the OBE and an SSE. In addition, other loads that may occur concurrently with the seismic event shall be accounted for (see AA-4212). The rules of this Subarticle are consistent with and complementary to ANSI/IEEE 344.		
68	AA-4351.1	*Equipment Mounting:* The equipment to be tested shall be mounted on the test machine in a manner that simulates the intended service mounting. The mounting method shall be the same as that recommended for actual service, which includes the recommended bolt size and configuration, weld pattern, and type. The effect of all attached hardware such as electrical connections, conduit, sensing lines, piping, and ductwork shall be considered. The method of mounting the equipment to the test machine shall be documented and shall include a description of any interposing fixtures and connections. Effect of such fixtures and connections shall be evaluated if they are only used during qualification and not for inservice mounting. Equipment orientation shall be along the major and minor axes for each test condition unless specified otherwise by the equipment Design Specification or the applicable equipment section of this Code.		
69	AA-4351.2	*Equipment Monitoring:* Sufficient monitoring equipment shall be used to evaluate the performance of the safety function of the equipment before, during, and after the test. In addition, sufficient vibration monitoring equipment shall be used to allow determination of the applied vibration levels. In addition to the monitoring of the test machine, as many points of the equipment shall be monitored as needed to provide information that shall be used in evaluating the test results.		
70	AA-4351.3	*Exploratory Tests:* Exploratory vibration tests required for all qualification tests except multiple frequency tests (see AA-4356) shall be run on equipment to aid in the determination of the test method that will best qualify or determine the dynamic characteristics of the equipment. As per AA-4352, the type of test required to qualify equipment for various applications shall be dependent on the mature and dynamic characteristics of the equipment and the required response spectrum (RRS). If it can be shown that the equipment is not in resonance at any frequency within the frequency range of interest, it shall be considered to act as a rigid body and analyzed or tested accordingly. If there are resonances, one of the various methods of AA-4352 or other justifiable methods shall be used.		
71	AA-4351.3	*Exploratory Tests:* The exploratory test shall be in the form of a low level (the level shall be chosen to give a usable signal to noise ratio on the vibration sensing equipment) continuous sinusoidal sweep at a rate no greater than 2 octaves per minute over the frequency range equal to or greater than that to which the equipment is to be qualified. If the configuration of the equipment is such that critical natural frequencies cannot be ascertained due to either the complexity of the equipment or the inaccessibility of critical parts, the exploratory test is not adequate. If the configuration of the equipment is such that critical natural frequencies cannot be ascertained, seismic qualification shall be accomplished by proof testing with a random input motion that shall generate a test response spectrum (TRS) to envelop the RRS. An acceptable alternative shall be to qualify the equipment by a fragility test as described in AA-4351.7.		
72	AA-4351.3	*Exploratory Tests:* It must be noted that for certain equipment, due to geometric or material nonlinearities, a low level resonant frequency search may not be a conclusive determinant of equipment resonances. In those cases, a higher level input shall be used and the exploratory tests rerun.		
73	AA-4351.4	*Seismic Qualification Tests:* Seismic qualification tests designed to show acceptable performance of equipment during and following an SSE shall be preceded by one or more OBE tests. The number of OBE tests shall be given in the equipment Design Specification and shall be followed by one SSE test. Each minimum test duration shall be given in the equipment Design Specification.		

Requirement Number	Source	Requirement Text	Verification/Validation R - Review A - Analysis T - Test I - Inspection	Design Document Reference (Where is this requirement incorporated in the design)
74	AA-4351.5	*Equipment Loads During Testing:* Seismic qualification tests of equipment shall be performed with the equipment subjected to the combined loads identified in AA-4212. These loads shall be simulated and shown to be equal to or greater than those expected. If any load is not included during these tests, justification for the absence of the load shall be provided.		
75	AA-4351.6	*Proof Testing:* Proof testing is used to qualify the equipment for a particular application or to a particular requirement. A proof test requires that the equipment be subjected to one of the tests described in AA-4352 to the particular response spectrum or time history defined for the mounting location of the equipment. A proof test requires that the equipment be subjected to one of the tests described in AA-4352 to the particular response spectrum or time history defined for the mounting location of the equipment. An attempt to determine the failure threshold of the equipment need not be made. The equipment shall be tested to the performance requirement of the equipment Design Specification and need not be tested to its ultimate capability.		
76	AA-4351.7	*Fragility Testing:* Fragility testing shall be used to qualify the equipment by determining its ultimate capability for performing its safety function. Equipment fragility shall be demonstrated by using sine beat, continuous sine, transient, or multi-frequency excitation to random-type waveforms. A measurement of the equipment's fragility level for a particular excitation demonstrates its ultimate capability to perform its safety function while subject to that motion.		
77	AA-4351.8	*Device Testing:* Devices shall be tested under simulated operating conditions to either the levels dictated by expected service requirements or to their ultimate capability. The devices shall be mounted on the shake table in a manner that dynamically simulates the in-service mounting conditions. If a device is intended to be mounted on a panel, the panel shall be included in the test setup, or the response at the device mounting location shall be monitored in the assembly test, (see AA-4351.9) in which case, the device shall be mounted directly to the shake table, if the inservice excitation can be simulated. Devices shall be tested using the methods described in AA-4352.		
78	AA-4351.9	*Assembly Testing:* Large complex assemblies shall be tested under simulated operating conditions and monitored for proper functional performance; however, it may not always be practical to simulate all system simultaneously. It is acceptable, therefore, to test such equipment in an inoperative mode with the actual or simulated devices installed, including any nonsafety-related devices. The test shall determine the vibration response at the device location by either direct measurement at full excitation or by determination of the transfer function from the assembly mounting points to the device mounting point. The resulting vibration response of the device at its location in the assembly shall be less than the vibration to which the device is qualified. The test methods described in AA-4352 shall be used.		
79	AA-4352	*Test Methods:* Present test methods fall into two major categories: proof testing (AA-4351.6) and fragility testing (AA-4351.7). The choice of method will depend upon the nature of the equipment and the expected vibration environment. Consideration shall be given to the choice of single axis or multiple axis testing as described in AA-4358. A proof test seismic simulation waveform shall: (a) produce a test response spectrum (TRS) that closely envelops the RRS or the applicable portions thereof, using single or multiple frequency input motion; (b) have a peak amplitude equal to or greater than the zero period acceleration (ZPA) of the required response spectrum (RRS); (c) have a test duration in accordance with the requirements of AA-4357.		
80	AA-4353	*Artificial Broadening Required Response Spectra:* If single frequency tests are to be conducted to artificially broadened response spectra, test shall be conducted at frequency intervals on either side of the center frequency of the response spectra. If the center frequency in the broadened area is f_c, testing shall be conducted at this frequency and also at the frequencies f_c +/- Δf_c ... where Δf_c corresponds to a 1/6 to 1/3 octave interval, until the entire broadened area has been covered. The TRS generated during each individual test shall have at least the same amplitude as the original narrow-band response spectrum.		
81	AA-4354	*Damping Selection:* The damping value used in analyzing the test machine motions that generate the TRS shall be the same damping value as that of the RRS.		
82	AA-4355.4	*Single Frequency Tests:* If it can be shown that the equipment has no resonances, only one resonance, or distinct resonances which are widely spaced such that the resonance interaction does not reduce the fragility level, single frequency testing may be used to qualify the equipment.		
83	AA-4355.1	*Derivation of Test Input Motion:* For any input waveform, the shake table motion shall produce a TRS acceleration at the test frequency that is at least equal to that given by the RRS. Additionally, the input motion shall be adjusted to produce a TRS that envelops the RRS at all frequencies, as described in AA-4353. Also, the maximum acceleration of the shake table motion shall be at least equal to the ZPA value of the RRS.		

Requirement Number	Source	Requirement Text	Verification/Validation R - Review A - Analysis T - Test I - Inspection	Design Document Reference (Where is this requirement incorporated in the design)
84	AA-4355.2	*Continuous Sine Test:* A test at any frequency shall consist of the application of a continuous sinusoidal motion corresponding to the maximum acceleration to which the equipment is to be qualified for the appropriate duration (see AA 4357). The selection of the peak input acceleration and the length of time the test is to be run shall produce at least the maximum response acceleration given in AA-4355.1. The peak input acceleration must be at least equal to the ZPA of the RRS, except at low frequencies where the RRS is below the ZPA for which the value of the RRS must be met (see AA-4358 for requirements on the axial relationships for the test).		
85	AA-4355.3	*Sine Beat Test:* A test at any frequency shall consist of the application of sine beats of peak acceleration corresponding to that for which the equipment is to be qualified. The sine beats consist of a sinusoid at the frequency and amplitude of interest, as shown in Fig. AA-4355.3. The number of cycles per beat and the peak amplitude of the beat are chosen in accordance with the criteria of AA-4355.1. The peak amplitude of the beat shall at least be equal to the ZPA of the RRS, except at low frequencies where the RRS is below the ZPA for which the value of the RRS must be met. For a test at any frequency, a series of beats are used to represent low cycle fatigue effects, with a sufficient pause between the beats so that there is no significant superposition of equipment response motion (see AA4358 for requirements on the axial relationships for the test).		
86	Fig. AA-4355.3	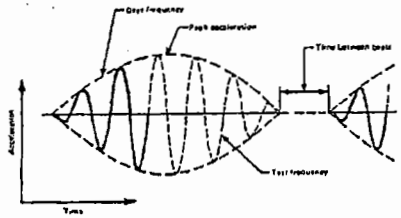 FIG. AA-4355.3 SINE BEAT FREQUENCY AND AMPLITUDE		
87	AA-4355.4	*Decaying Sine Test:* A test at any frequency shall consist of the application of decaying sinusoids of peak acceleration corresponding to that for which the equipment is to be qualified. The decaying sinsuoids consist of a single frequency of exponentially decaying amplitude, as shown in Fig. AA-4355.4. The peak amplitude and decay rate are chosen to obtain a TRS from the shake table motion that envelops the RRS (see AA-4355.1). The peak amplitude of the sinusoid shall at least be equal to the ZPA of the RRS, except at low frequencies where the RRS is below the ZPA for which the value of the RRS must be met. For a test at any frequency, a series of decaying sinusoids are used with a sufficient pause between the sinusoids so that there is no significant superposition of equipment response motion. The frequencies of interest are the natural frequencies of the equipment being tested (see AA-4358 for requirements on the axial relationships for the test).		
88		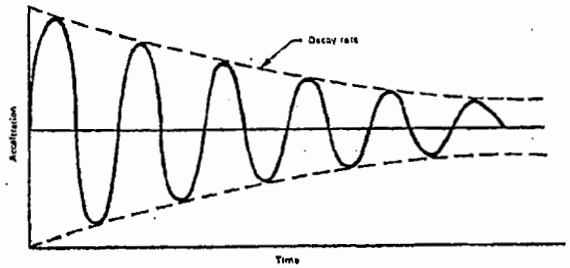 FIG. AA-4355.4 SINE AMPLITUDE DECAY RATE (Reproduced from ANSI/IEEE 344-1975, Recommended Practice for Seismic Qualification of Class 1E Equipment for Nuclear Power Generating Stations, by permission of The Institute of Electrical and Electronics Engineers, Inc.)		

Requirement Number	Source	Requirement Text	Verification/Validation R - Review A - Analysis T - Test I - Inspection	Design Document Reference (Where is this requirement incorporated in the design)
89	AA-4356	*Multiple Frequency Tests:* When the seismic ground motion has not been strongly filtered, the floor motion retains the broadband characteristic. In that case multiple frequency testing shall be used for qualification. It is used as a general qualification method as long as the TRS envelopes the RRS. Specific input excitation to the test machine shall include a time history motion consisting of random and complex wave shapes. The test machine input excitation waveforms described in the following subparagraphs shall be employed to test to an RRS level. Other inputs that are not specifically referenced here may also be employed, provided that they envelope the RRS.		
90	AA-4356.1	Derivation of Test Input Motion. For any waveform, the test machine motion must be adjusted so that the TRS envelopes the RRS over the frequency range for which the particular test is designed; and, as a minimum, the test machine acceleration must equal the ZPA of the RRS. This comparison must be made using equivalent values of damping. The adjustment of the input motion to produce an envelope spectrum shall be made considering the following factors: (a) the RRS may have motion amplification over a narrow or broad band of frequencies; (b) the input excitation waveform may be one of several multiple frequency types; (c) the equipment being tested may have one of many possible dynamic characteristics. For assemblies or devices where the dynamic response results from numerous interacting modes, the shake table input excitation must be adjusted so that the TRS envelops the RRS over a frequency range that includes all natural frequencies of the equipment up to the ZPA.		
91	AA-4356.2	*Time History Test:* A test may be performed by applying to the equipment a specified time history that has been synthesized to simulate the required input to the equipment. It shall be demonstrated that the actual test machine motion was equal to or greater than the required motion. A time history record may be synthesized to match the RRS using simulation techniques. The duration of the input excitation must be sufficient to simulate the effects of a seismic event. Alternatively, the equipment Design Specification may contain time history data for use in testing.		
92	AA-4356.3	*Random Motion Test:* A test shall be performed by applying to the equipment random excitation, the amplitude of which is controlled in 1/3 octave, or narrower, frequency bandwidth filters with individual output gain controls. The excitation shall be controlled to provide a TRS that equals or exceeds the RRS. The peak value of the input excitation shall equal or exceed the ZPA of the RRS. The duration of the random excitation shall be as described in AA-4357.		
93	AA-4356.4	Random Motion With Sine Beat Test: To meet an RRS that includes a moderately high peak random excitation, it is acceptable to adjust the random input, as described in AA-4356.3, to equal or exceed as much of the RRS as possible without using a peak input acceleration substantially greater than the ZPA. A sine beat or beats shall be superimposed with random input motion to provide a composite excitation, so that the TRS equals or exceeds the entire RRS over a frequency range that includes the natural frequencies of the equipment up to the ZPA frequency [see Fig.AA-4356.4-1]. The optimum number of oscillations per beat shall be determined from a plot showing the ratio between the 1/2% and 5% spectrum damping values and the oscillations per beat, as shown in Fig. AA-4536.4-2.		
94	Fig.AA-4356.4-1	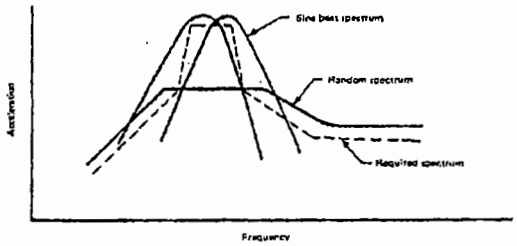 FIG. AA-4356.4-1 RESPONSE SPECTRUM OF COMPOSITE EXCITATION (Reproduced from ANSI/IEEE 344-1975, Recommended Practice for Seismic Qualification of Class 1E Equipment for Nuclear Power Generating Stations, by permission of The Institute of Electrical and Electronics Engineers, Inc.)		

Requirement Number	Source	Requirement Text	Verification/Validation R - Review A - Analysis T - Test I - Inspection	Design Document Reference (Where is this requirement incorporated in the design)
95	Fig. AA-4536.4 2.	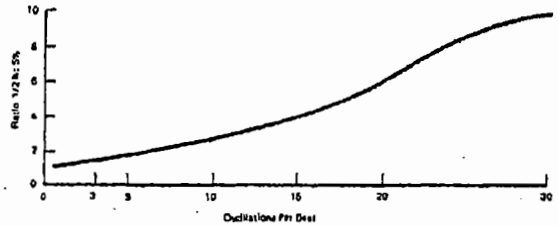 FIG. AA-4356.4-2 OSCILLATIONS PER BEAT (Reproduced from ANSI/IEEE 344-1975, Recommended Practice for Seismic Qualification of Class 1E Equipment for Nuclear Power Generating Stations, by permission of The Institute of Electrical and Electronics Engineers, Inc.)		
96	AA-4356.4	*Random Motion With Sine Beat Test:* When more than one frequency of sine beats is required to meet the bandwidth of a spectrum, the beats shall be initiated simultaneously. However, if the bandwidth of the peak value of the RRS has been widened to account for uncertainty due to building frequency analysis, the beats shall be applied in sequence or the techniques of AA-4353 shall be applied.		
97	AA-4356.5	*Complex Wave Test:* This test may be performed by subjecting the equipment to a motion that has been generated by summing a group of sine beats or decaying sinusoids. The frequencies of the component signals shall be spaced at 1/3 octave or narrower frequency intervals to cover the range required by the RRS. The decaying sinusoids shall have individual decay rate controls covering the range of 1/2% to 10%. Each frequency must have individual amplitude and phase controls. All frequencies shall be initiated simultaneously with the phase controls set to shape the peak amplitude of the composite waveform.		
98	AA-4356.5	*Complex Wave Test:* The decay rate shall be varied, and the amplitude of each frequency shall be varied to optimize the fit of the TRS to the RRS. The peak acceleration of the test table during composite waveform excitation shall be greater than or equal to the ZPA of the RRS. The test shall consist of several applications of the motion spaced apart in time so that no significant superposition of response motion occurs. The number of applications of the motion must be justified as being representative of the strong motion portion of the SSE. The number of application shall be such that the total duration of the middle-frequency components equals the duration of the SSE (see AA-4357).		
99	AA-4356.6	*Other Tests:* The following factors shall be considered to justify the test method employed to qualify equipment: (a) band width of the RRS compared to that of the TRS and equipment characteristics and responses; (b) duration of the test compared to the defined seismic event; (c) peak acceleration of the test input and the amplification observed; (d) natural modes and frequencies of vibration of the equipment; (e) typical damping of the equipment; (f) fragility levels; and (g) total number of cycles and the simulation of fatigue failure.		
100	AA-4357	*Test Duration:* The number of required OBE events per 40-year plant life shall be a minimum of five unless stated otherwise in the equipment Design Specification. The number of tests run as proof tests (see AA-4351.6) shall have an appropriate input level to fulfill the requirements of AA-4351.4. The OBE tests shall be followed by at least one SSE test. The duration of each test shall at least equal the strong motion portion of the original time history used to obtain the RRS for the SSE and shall be a minimum of 30 sec for a multi-frequency test, and a minimum of 15 sec for a single frequency test. Credit may be taken for any test preceding the SSE test if it is shown to be greater than or equal in severity to the required OBEs. Fragility test durations shall be least equal the time duration for the strong motion portion of the SSE in order to properly account for vibration buildup.		
101	AA-4358	*Single and Multi-axis Tests:* Single axis tests are permitted if the tests are designed to reflect conservatively the seismic event at the equipment mounting locations, or if the equipment being tested can be shown to respond independently in each of the three orthogonal axes or otherwise withstand the seismic event at its mounting location. This is the case if equipment axis coupling is zero or very low. For example, if a device is normally mounted on a panel that amplifies motion in one direction, or if a device is restrained to have motion in one direction, single axis testing of the device is permitted.		

Requirement Number	Source	Requirement Text	Verification/Validation R - Review A - Analysis T - Test I - Inspection	Design Document Reference (Where is this requirement incorporated in the design)
102	AA-4358	*Single and Multi-axis Tests:* If the preceding considerations do not apply, multi-axis testing shall be used. The minimum is biaxial testing with simultaneous inputs in a principal horizontal axis and the vertical axis. Independent random inputs are preferred and, if used, the test shall be performed in two steps with the equipment rotated 90 deg. in the horizontal plane for the second step. If independent random inputs are not used (such as with single frequency tests), four tests shall be run. First, with the inputs in phase; second, with one input 180 deg. out of phase; third, with the equipment rotated 90 deg. horizontally and the inputs in phase; and fourth, with the same equipment orientation as in the third step but with one input 180 deg. out of phase.		
103	AA-4360	*Design of Bolts:* The number and cross-sectional area of bolts required for the load combinations of AA-4212 shall be determined in accordance with the ASME Code, Section III, Appendix XVII, Bolted joint design shall be in accordance with Appendix XVII, XVII-2460.		
	AA-4400	DOCUMENTATION REQUIREMENTS		
104	AA-4400	*General:* The equipment design verification shall be documented by a certified Design Verification Report (DVR), in accordance with the rules given in this Section. This document may be based on one of three types of verification, or a combination of these: (a) design verification stress report; (b) design verification test report; or (c) design verification by comparative evaluation. Factors considered in choosing a particular type of design verification shall be included in the DVR.		
105	AA-4410	*Certification of Design Verification:* A Certificate of Design Verification shall be provided with the DVR. This Certificate shall include: (a) description and identification of equipment covered by the DVR, including the name of the plant, the plant location, the Owner, location of the equipment in the plant, and its function; (b) statement of compliance with AA-4000 and the equipment Design Specification requirements; (c) date, revision, and report identification number of the analysis or test program; and (d) names and signatures of responsible persons performing, reviewing, and approving the design verification.		
106	AA-4420	*Equipment Description:* The DVR shall include a detailed description of the equipment being qualified. Outline drawings showing equipment interface points, anchor locations, weights, and locations of major components shall be included. In addition, plant specific information such as building location and elevation shall be reported if appropriate. Any appropriate tag numbers and equipment model numbers, where applicable, shall be included.		
	AA-4430	SAFETY-RELATED FEATURES		
107	AA-4431	*Safety-Related Functions:* Equipment safety-related functions in all modes of operation shall be fully described in the DVR.		
108	AA-4432	*Critical Components:* All components critical to the performance of the safety-related functions of the equipment shall be identified in the DVR.		
109	AA-4433	*Failure Modes and Evaluation Criteria:* For all critical components listed, the potential failure modes being considered in the design shall be described in the DVR. In addition, the evaluation criteria used to verify that the critical components will not enter a failure mode shall be defined in the DVR.		
	AA-4440	REPORT CONTENT		
110	AA-4441	*Design Verification Report:* The DVR shall address all items listed in this paragraph: (a) description of analytical method used; (b) description of mathematical model in sufficient detail to allow reconstruction of the model by referring only to the report content; (c) list of the static loads considered; (d) method of developing dynamic loadings, including: (1) identification of response spectra and damping used; (2) method of combining modes; (3) method of combining spatial components of dynamic loads; & (4) assurance that rigid body motions are included; (e) load combinations considered, including interface loading effects and differential movement of multiple equipment supports; (f) evidence of verification of all computer programs used;		

Requirement Number	Source	Requirement Text	Verification/Validation R - Review A - Analysis T - Test I - Inspection	Design Document Reference (Where is this requirement incorporated in the design)
111	AA-4441	*Design Verification Report:* (g) justification of methods and assumptions used for manual calculations; (h) results of analyses, including: (1) failure mode analysis; (2) description of significant mode shapes and natural frequencies; (3) location and value of maximum stresses; (4) location and value of maximum deformations; (5) allowable interface loads; (6) reaction data at equipment supports; these data may be reported in a summary form only if foundation loads are to be included. Otherwise, detailed listings of individual support reactions for each load case considered shall be included; (7) summary of maximum anchor bolt or anchor weld stresses compared to allowable limits.		
112	AA-4442	*Design Verification Test:* The DVR shall address all items listed in this paragraph: (a) detailed test procedure used for the equipment design verification test (DVT); (b) identification of the test facility performing the test and the test dates; (c) list of test equipment used and certified calibration records for each; (d) laboratory mounting details for the equipment test and a comparison of this to inservice mounting; justification for all differences must be addressed; (e) method used to simulate significant inservice interface loads, if applicable; (f) variable to be measured during and after dynamic motion and the accuracy required for each measurement; (g) number, type, and location of each sensor used to measure important equipment function and motion; (h) description of vibration input to the test equipment including: (1) single or multiaxis; (2) single or multifrequency; (3) if multifrequency, type used (sine beat, random);		
113	AA-4442	*Design Verification Test:* (i) evidence that all significant modes were adequately excited; (j) evidence that, for multifrequency tests, the test response spectra (TRS) enveloped the required response spectra (RRS); (k) data showing that the safety-related functions as defined in AA-4431 were not compromised during or after the simulated dynamic loading; (l) results of measurements performed to verify equipment functionability; (m) maximum equipment response (displacement) during most violent tests; (n) maximum reactions at equipment supports (measured or calculated); (o) list of all anomalies during the DVT and the resolution of each; (p) equipment modifications made during the DVT, if any, and justification for using test data without retesting, or full report of any retesting accomplished; (q) summary of results of DVT and conclusions drawn.		
114	AA-4443	*Design Verification by Comparative Evaluation Report:* If the equipment design being verified has been previously verified to different criteria, or if the equipment design is similar to a design previously verified, it may be acceptable to verify the current design by comparative evaluation. Whether the basis for design verification is analysis or test, all of the points required by AA-4441 or AA-4442 must be addressed. In addition, any differences between the previous design verification method and the requirements of AA-4000 must be identified and justified as conservative. Any differences in equipment design between the previously verified design and the design being considered must be shown to be conservative.		
	AA-5000	**INSPECTION AND TESTING**		
115	AA5110	*Scope:* This Article contains general requirements for the examination, inspection, and testing of materials and equipment.		
116	AA-5120	*Responsibility for Procedures:* When an inspection or test is required by AA-5000 or by any other section, written inspection or testing procedures shall be developed by the parties performing the test or inspection subject to the specific requirements of this Code. The inspection or testing shall be performed by personnel qualified in accordance with AA-8000 and with applicable portions of the other sections.		
117	AA-5130	*Measuring and Test Equipment:* Control and calibration of Measuring and Test Equipment (M&TE) shall be in accordance with ASME NQA-1, including Supplement 12S-1.		
	AA-5200	**VISUAL INSPECTION**		

Requirement Number	Source	Requirement Text	Verification/Validation R - Review A - Analysis T - Test I - Inspection	Design Document Reference (Where is this requirement incorporated in the design)
118	AA-5221	*Direct Visual Examination:* Direct visual examination usually may be made when access is sufficient to place the eye within 24 in. (610 mm) of the surface to be inspected and at an angle not less than 30 deg. to the surface to be examined. Mirrors may be used to improve the angle of vision, and aids such as magnifying lens may be used to assist inspections. The specific part, component, vessel, or section thereof shall be illuminated to a minimum of 15 fc (160 lx) for general inspection and to a minimum of 50 fc (540 lx) for the detection or study of small anomalies. Visual inspection personnel shall successfully pass an annual visual examination to assure natural or corrected near distance acuity so that they are capable of reading standard J-1 letters on standard Jaeger-type test charts for near vision.		
119	AA-5222	*Remote Visual Inspection:* In some cases, remote visual examinations may have to be substituted for direct examination. Remote visual inspection may use visual aids such as mirrors, telescopes, borescopes, fiber optics, cameras, or other instruments. Such systems shall have a resolution capability at least equivalent to that obtainable by direct visual observation.		
120	AA-5230	*Requirements:* When required by the referencing Code section, visual inspections shall be performed.		
121	AA-5240	*Inspection Checklist:* When required by the referencing Code section, a checklist shall be used to plan visual inspections and to verify that the required observations were performed. This checklist shall establish minimum inspection requirements to be followed by the Manufacturer.		
122	AA-5250	*Reports:* When required by another section of this Code, a written report shall be provided and shall contain the following as a minimum: (a) the inspection procedure used, date of the inspection results, and inspector's signature; (b) identification of instruments, equipment, tools, and documents to the extent that they or their equivalents can be identified for future examinations; (c) observations and dimensional checks specified by the respective test data and reports developed during inspection and testing; (e) conclusion and recommendation by visual inspection and testing personnel; (f) reference to previous reports if this report is for re-inspection and testing.		
	AA-5300	WELDED CONNECTIONS		
123	AA-5300	Examination, inspection, and testing of welds shall be in accordance with AA-6000 and other sections of this Code.		
	AA-5400	BOLTED CONNECTIONS		
124	AA-5410	*Before Bolting:* Flange seating surfaces shall be visually examined for cleanliness and acceptable surface finish. Flange faces shall be examined for compliance with tolerances for mutual parallelism and axial alignment, as well as for planarity of each flange. Gaskets shall be visually examined to assure conformance with specified dimensional tolerances and freedom from tears, breaks, or other defects.		
125	AA-5420	*After Bolting:* Bolts in all bolted connections shall be examined to ensure bolts are in place. A uniform sampling of 25% of all bolts in a bolted connection shall be tested with a calibrated torque wrench. Torquing requirements shall be established for each bolted connection. If any bolt in the sample fails to meet torque requirements, all bolts in the connection shall be re-torqued. Gaskets in bolted connections shall be visually examined for uniform compression.		
	AA-5500	FABRICATION TECHNIQUES		
126	AA-5500	Equipment and components shall be examined for conformance to tolerances required by this Code and by the design specification. Refer to other Code sections for specific requirements.		
	AA-5600	PRESSURE AND LEAK TESTING		
127	AA-5600	Pressure and leak testing of equipment and components shall be performed in accordance with the requirements of this Code. Refer to the other Code sections for specific testing requirements.		
	AA-5700	PERFORMANCE AND FUNCTIONAL TESTING		
128	AA-5700	Testing shall be performed to ensure that prototype and production equipment possess dynamic and functional characteristics that meet requirements of this Code and of the design specification. Among the characteristics that may be determined by testing are fluid flow rates and pressures, air filter performance, electrical quantities, bearing operation, rotor balance, and sound power level. NOTE: Divisions II and IV of this Code, in the course of preparation, will provide specific factory testing requirements and field testing requirements.		
	AA-5800	SEISMIC TESTING		
129	AA-5800	*Seismic Testing:* Refer to AA-4350 for the requirements of structural design verification by testing.		

Requirement Number	Source	Requirement Text	Verification/Validation R - Review A - Analysis T - Test I - Inspection	Design Document Reference (Where is this requirement incorporated in the design)
	AA-6000	FABRICATION, JOINING, WELDING, BRAZING, PROTECTIVE COATING, AND INSTALLATION		
130	AA-6110	*Scope and Applicability:* This Article contains general requirements for the fabrication, joining, welding, brazing, protective coating, and installation of components, parts, and equipment. The requirements of this Article are applicable to the extent they are invoked by the other sections. Unique requirements are given in each Code section.		
131	AA-6121	*Material Selection:* Materials to be used in the fabrication of components, parts, and appurtenances shall conform to the requirements of Article 3000 of each Code section.		
132	AA-6122	*Material Identification:* Materials to be used in the fabrication of components, parts, and appurtenances shall be identified on fabrication and installation plans and specifications as required in AA-8000.		
133	AA-6123	*Repair of Material with Defects:* Material with defects that are discovered or produced during the fabrication and installation processes may be used, provided the defects are repaired in accordance with the requirements of AA-8000, and for weld repairs, in accordance with AA-6300.		
134	AA-6130	*Control of Fabrication and Installation Processes:* Quality control procedures shall be prepared and maintained current for all fabrication and installation processes in accordance with the requirements of AA-8000.		
	AA-6200	FABRICATION PROCESSES		
135	AA-6210	*Cutting, Forming, and Bending:* Material may be cut to shape and size by any means that does not degrade the mechanical or chemical properties of the material below the minimum specified values. The method or methods selected shall not create critical stress areas, such as less than accepted corner radii. When thermal cutting is used, consideration shall be given to preheating the material. Forming and bending of pressure retaining parts that are to meet requirements of Section III or Section VIII of the ASME Code shall conform to the applicable article or articles of the applicable section of this Code.		
136	AA-6220	*Forming Tolerances:* Forming tolerances shall be defined in the Design Specification, drawings, and Manufacturer's design documents. Formed parts outside the tolerances specified after the completion of all forming, assembly, and welding operations shall be rejected. Repairs may be made to formed parts to correct unacceptable tolerances in accordance with AA-6123.		
137	AA-6230	*Fitting and Aligning:* Parts that are to be assembled or joined by mechanical means (e.g., bolts) or welding shall be fitted, aligned, and when necessary, retained in position during assembly. Attachments that are welded to the component during construction, but are not incorporated into the final component, such as alignment lugs or straps, tie straps, braces, preheat equipment, and postweld heat treatment equipment, are permitted provided the following requirements are met: (a) attachment material shall be identified by ASTM or ASME specification number and shall be certified when required by another Code section; (b) the temporary material is compatible for welding to the component material and the attachment and subsequent removal does not reduce the component's structural integrity below the minimum specified value; (c) the welder and welding procedure shall be in accordance with AA-6300;		
138	AA-6230	*Fitting and Aligning:* (d) the immediate area around the temporary attachment shall be marked in an acceptable manner so that, after attachment removal, the area can be examined in accordance with the requirements of AA-5000; (e) The temporary attachment shall be completely removed by mechanical means such as machining, shearing, clipping, or grinding, or by thermal cutting, in accordance with AA-6210.		
139	AA-6240	*Welded Joints:* Manufacturer's fabrication drawings shall provide complete information regarding location, type, size, and extent of all welds. Field and shop welds shall be clearly identified. Members to be joined by welding shall be brought into correct alignment when necessary and held in position by bolts, clamps, or temporary weld attachments meeting the requirements of AA-6230, until the welding is completed. Welding shall conform to the requirements of AA-6300.		
	AA-6250	MECHANICAL JOINTS		

Requirement Number	Source	Requirement Text	Verification/Validation R - Review A - Analysis T - Test I - Inspection	Design Document Reference (Where is this requirement incorporated in the design)
140	AA-6251	*Fasteners and Threaded Joints:* Fasteners and threaded joints shall be provided with locking devices or other means to prevent loosening under the vibratory loads expected during system operation. The threads of all bolts or studs shall be engaged for the full length of the thread in the nut unless specified otherwise on Manufacturer's design drawings or specifications. Thread engagement of all bolts and studs shall be as specified on the drawings.		
141	AA-6252	*Structural and Pressure Boundary Fasteners:* Type, size, and spacing of structural and pressure boundary fasteners shall be selected to meet the maximum stresses anticipated for the worst load combination and shall be documented by calculations		
142	AA-6253	*Thread Lubricants:* Any lubricant or compound used in threaded joints shall be acceptable for the service conditions and shall not react unfavorably with any contact material. Contact surfaces within friction-type joints shall be free of oil, paint, lacquer, galvanizing, or other plating.		
143	AA-6254	*Removal of Thread Lubricants:* All thread lubricants or compounds shall be removed from surfaces that are to be welded.		
144	AA-6255	*Bolted Connections:* Surfaces of bolted parts in contact with the bolt head and nut shall not have a slope of more than 1:20 with respect to a plane normal to the bolt axis. Where the surface of a high strength bolted part has a slope of more than 1:20, a beveled washer shall be used to compensate for the lack of parallelism. Bolts loaded in pure shear shall not have threads located in the load bearing part of the shank unless permitted by the Design Specification or Manufacturer's specification.		
145	AA-6256	*Precautions Before Bolting:* All parts assembled for bolting shall have contact surfaces free from scale, chips, or other deleterious material. Surfaces and edges to be joined shall be smooth, uniform, and free from fins, tears, cracks, and other defects that would degrade the strength of the joint.		
146	AA-6257	*Bolt Tension:* All high strength structural bolts shall be tightened to a bolt torque equal to that given in the Design Specification or Manufacturer's specification. Tightening shall be done by the turn of nut method or with properly calibrated wrenches. Bolts tightened by means of a calibrated wrench shall be installed with a hardened washer under the nut or bolt head, whichever is the element turned in tightening. Hardened washers are not required when bolts are tightened by turn of the nut method, except that hardened washers are required under the nut and bolt head when the bolts are used to connect material having a specified yield point less than 40.0 ksi (276 MPa).		
147	AA-6258	*Locking Devices:* Threaded fasteners, except high strength bolts, shall be provided with locking devices to prevent loosening during service. Elastic stop nuts (when compatible with service temperature), lock nuts, jam nuts, and drilled and wired nuts are all acceptable locking devices. Upset threads may service as locking devices.		
	AA-6300	WELDING REQUIREMENTS		
148	AA-6310	(a) *Scope:* The requirements of AA-6300 apply to the preparation of welding procedure specifications, qualification of welding procedures, welders, and welding operators for all types of manual and machine welding processes, and to the workmanship, weld quality, and inspection of weldments produced during the manufacture of equipment and components. The requirements of this Subarticle are applicable to the extent they are invoked by the other sections. Unique requirements are given in each section.		
149	AA-6310	(b) *Responsibility:* Each Manufacturer is responsible for the welding done by its organization and shall conduct the tests required in this Code to qualify the welding procedures used in the construction of the weldments built under this Code, the performance of welders and welding operators who apply these procedures, and the inspection required for workmanship and weld quality verification.		
150	AA-6310	(c) *Records:* Each Manufacturer shall maintain a record of the results obtained in welding procedure and welder and welding operator performance qualifications. These records shall be certified by the Manufacturer and shall be accessible for review.		
151	AA-6310	(d) *Base Metal:* (1) Base metals to be joined by welding shall be one or a combination of those listed in Article 3000 of each Code section. (2) Rust inhibitive coatings, galvanized coatings, or antispatter compounds may remain on the metal to be joined provided the welding procedure is qualified with these materials present.		
152	AA-6310	(e) *Filler Metals:* Filler metals selected shall be one or a combination of those listed in the ASME Code, Section II, Part C, and shall be compatible with the wielding process used and the base metal designated on the Manufacturer's drawings.		
153	AA-6310	(f) *Processes:* Joining processes under this specification shall include oxyfuel gas welding (OFW), shielded metal-arc welding (SMAW), submerged-arc welding (SAW), gas meta-arc welding (GMAW), flux-cored arc welding (FCAW), gas tungsten-arc welding (GTAW), plasma-arc welding (PAW), resistance welding (RW), stud-arc welding, (SW), and carbon-arc welding (CAW).		
154	AA-6310	(g) *Terms and Definitions:* Terms and definitions shall be interpreted in accordance with ANSI/AWS A3.0.		
155	AA-6310	(h) *Symbols:* Symbols used on the Manufacturer's drawings shall be in accordance with ANSI/AWS A2.4.		
156	AA-6310	(i) *Safety Precautions:* Safety precautions shall conform to the latest edition of ANSI/ASC Z49.1.		
157	AA-6310	(j) *Standard Units of Measurement:* The values stated in U.S. customary units are to be regarded as the standard. The metric (SI) equivalents of U.S. customary units as given are approximate.		

Requirement Number	Source	Requirement Text	Verification/Validation R - Review A - Analysis T - Test I - Inspection	Design Document Reference (Where is this requirement incorporated in the design)
158	AA-6310	(k) *Welding Procedure and Performance Qualification:* (1) Qualification of the Manufacturer's welding procedure specifications and welder and welding operator performance shall be in accordance with the requirements of one or more of the following, as defined in each Code section. (a) ASME Code, Section IX (b) ANSI/AWS D1.1 (c) ANSI/AWS D9.1 (d) AWS C1.1 (e) AWS C1.3 (f) ANSI/AWS D1.3 (2) Welding of performance qualification test samples shall be performed in accordance with the Manufacturer's qualified welding procedure for the process used. (3) Welding procedure qualification of coated base metals qualifies the procedure for uncoated base metals, but not vice versa. (4) Base metal sensitization shall be considered in selecting the welding process and filler metals for welding procedures developed for welding stainless steel.		
	AA-6320	WORKMANSHIP		
	AA-6321	PREPARATION OF BASE METAL		
159	AA-6321.1	Surfaces and edges to be welded shall be free from fins, tears, cracks, and discontinuities that would adversely affect the quality or strength of the weld. Surfaces to be welded and surfaces adjacent to a weld shall also be free from loose mill scale, slag, rust, moisture, grease, and foreign material that would prevent proper welding. Mill scale that can withstand wire brushing, a thin rust-inhibitive coating, or anti-spatter compound may remain.		
160	AA-6321.2	Galvanized surfaces need not have the zinc coating removed before welding, provided the welding procedure is qualified with the galvanizing present.		
	AA-6322	JOINT FIT-UP		
161	AA-6322.1	Joints to be welded shall be brought into correct alignment within the tolerances required by the qualified welding procedure.		
162	AA-6322.2	When tack welds are used to assemble the joint for welding and are incorporated into the final weld, they shall be made with electrodes meeting the requirements of the final welds.		
163	AA-6322.3	Tack welds not incorporated into the final welds shall be removed.		
	AA-6323	WELD CLEANING		
164	AA-6323.1	Where cleaning of base metals is required, it shall be accomplished by wire brushing, grinding, blasting, solvents, or other suitable means that are noninjurious to the material or weld quality.		
165	AA-6323.2	Before welding over previously deposited metal, slag, if present, shall be removed and the weld and adjacent base metal shall be brushed clean. This requirement shall apply not only to successive layers, but also to successive beads and to the crater area when welding is resumed after any interruption.		
166	AA6323.3	Upon completion, the weld and adjacent areas shall be cleaned of all slag excessive spatter, soot, dirt, or any residue from welding. Welds shall be left in a condition ready for subsequent inspection.		
	AA-6324	WELD QUALITY		
167	AA-6324.1	The sizes and lengths of welds shall be no less than those specified by design requirements and detail drawings.		
168	AA-6324.2	Weld profiles shall be in accordance with the acceptable weld profiles shown in Fig. AA-6324.2.		
169	AA-6324.3	The faces of fillet welds may be slightly convex, flat, or slightly concave, as shown in Fig. AA-6324.2, sketches (a) and (b), with none of the unacceptable profiles shown in sketch (c).		
170	AA-6324.4	Groove welds shall preferably be made with slight or minimum reinforcement except as may be otherwise provided. In the case of butt and corner joints, the reinforcement shall not exceed 1/8 in. (3.2 mm), in height and shall have a gradual transition to the plane of the base metal surface. See fig. AA-6324.2, sketch (d). They shall be free of the discontinuities shown for butt joints in sketch (e).		

Requirement Number	Source	Requirement Text	Verification/Validation R - Review A - Analysis T - Test I - Inspection	Design Document Reference (Where is this requirement incorporated in the design)
171	Fig. AA-6324.2	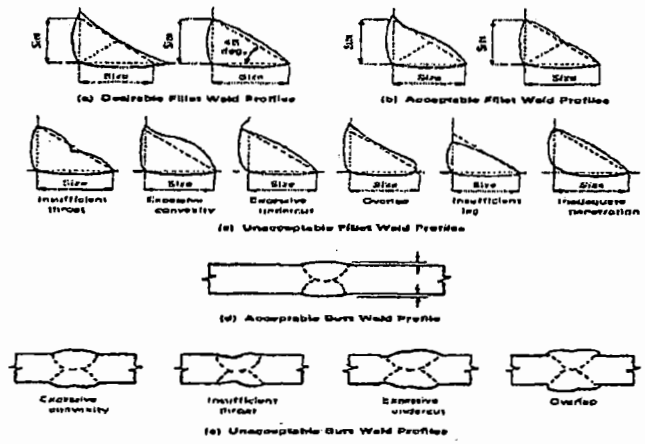 FIG. AA-6324.2 ACCEPTABLE AND UNACCEPTABLE WELD PROFILES		
	AA-6330	INSPECTION AND TESTING OF WELDS		
	AA-6331	BUTT AND FILLET WELDS		
172	AA-6331.1	Production welds shall be inspected. As a minimum, visual inspection shall be made: Welds that conform to the following criteria shall be acceptable: (a) fusion: complete fusion is required; (b) penetration: required joint penetration as specified for the application; (c) reinforcement of welds in butt joints: a maximum of 0.125 in. (3.2 mm) face reinforcement and 0.125 in. (3.2 mm) root reinforcement; (d) throat and convexity of fillet welds: a minimum weld leg size, as required on the design drawings, with maximum convexity not to exceed 0.125 in. (3.2 mm); (e) porosity or slag inclusion: a maximum of three visible pores or slag inclusions, or both, that do not exceed 0.25t/in. (0.25t/25.4 mm) of weld, and a maximum o one visible pore or slag inclusion that does not exceed 0.25t/in. (0.25t/25.4 mm) of weld, where t is the thinner base metal thickness; (f) undercut: no undercut exceeding 0.15t where t is 0.125 in. (3.2 mm) or thinner, or exceeding 1/32 in. (0.79 mm) where t exceeds 0.125 in (3.2 mm); (g) cracks: no cracks are permitted.		
173	AA-6331.2	Completed welds shall be visually inspected for location, size, and length in accordance with the requirements of applicable Manufacturer's drawings and specifications.		
174	AA-6331.3	When specified by the Engineer, the weld acceptance criteria of NCIG-01 may be used in lieu of the criteria of AA-6324 and AA-6331.1 for structures and supports fabricated to the requirements of the AISC specification and AWS D1.1.		
175	AA-6332	*Resistant Spot-Welds:* The diameter of the spot and cross section of the nugget shall be in accordance with the sizes specified on detail drawings and in Welding Procedure Specifications.		
	AA-6333	STUD WELDING		
176	AA-6333.1	The design of studs shall be suitable for arc welding to steel members with automatically timed stud welding equipment. An arc shield shall be furnished for all studs and pins over 10 gage diameter. At the time of welding, the studs shall be free from rust, rust pits, scale, oil, paint, galvanizing, or plating, and other deleterious material that would adversely affect the welding operation. After welding, stud ferrules shall be broken free for visual inspection.		
177	AA-6333.2	Stud weld reinforcement shall be as specified by the Manufacturer's drawings and procedure.		
	AA-6334	NONDESTRUCTIVE TESTING (NDT) METHODS AND ACCEPTANCE CRITERIA		

Requirement Number	Source	Requirement Text	Verification/Validation R - Review A - Analysis T - Test I - Inspection	Design Document Reference (Where is this requirement incorporated in the design)
178	AA-6334.1	When nondestructive testing other than visual inspection is required, it shall be so stated in the Manufacturer's drawings and specifications.		
179	AA-6334.2	Surface inspection, when required, shall be performed using the dye penetrant method. The standard methods set forth in ASTM E 165 shall be used for dye penetrant inspection, and the acceptance criteria shall be in accordance with AA-6331.		
180	AA-6334.3	For detecting surface or subsurface discontinuities, radiographic or ultrasonic inspection may be used. Radiographic or ultrasonic inspection shall be used only when joint designs require multiple pass welds. The standard methods set forth in Section V of the ASME Code shall be used for inspection and acceptance criteria and shall be in accordance with the following: (a) no cracks are permitted; (b) not more than three individual discontinuities, with the greatest dimension being less than 0.25 times the base metal thickness per linear inch of weld.		
	AA-6335	**INSPECTOR QUALIFICATIONS**		
181	AA-6335.1	Personnel performing visual inspections shall meet the requirements of ANSI/ASME NQA-1, including Supplements 2S-1 and 2S-2, to a Level I capability and be working under the supervision of a Level I or III individual, or shall be Level II or III individuals.		
182	AA-6335.2	Personnel performing nondestructive testing shall be qualified in accordance with SNT-TC-1A. Only individuals qualified for NDT Level I and working under an NDT Level II or III individual, or individuals qualified for NDT Level II or III, may perform nondestructive testing.		
183	AA-6335.3	Personnel performing visual inspections to the requirements of AA-6331.3 shall be trained in accordance with NCIG-03 with regard to the acceptance criteria of NCIG-01.		
184	AA-6336	*Repairs:* Defects in welds or base metals may be repaired in accordance with the applicable equipment section of this Code. Weld repairs shall be performed by qualified welders using qualified procedures and inspected to the original acceptance criteria.		
	AA-6400	**BRAZING**		
185	AA-6410	(a) *Scope:* The requirements of AA-6400 apply to the preparation of brazing procedure specifications, the qualifications of brazing procedures, brazers, and brazing operators for all types of manual and machine brazing processes, and the workmanship, braze quality, and inspection of brazements produced during the manufacture of equipment and components. Brazing shall be in accordance with this Subarticle unless specific requirements are given in the applicable equipment section of this code.		
186	AA-6410	(b) *Responsibility:* Each Manufacturer is responsible for the brazing done by its organization and shall conduct the tests required in this Code to qualify the brazing procedures used in the construction of the brazements built under this Code, the performance of brazers and brazing operators who apply these procedures, and the inspection required for workmanship and braze quality verification.		
187	AA-6410	(c) *Records:* Each Manufacturer shall maintain a record of the results obtained in brazing procedure and brazer and brazing operator performance qualifications. These records shall be certified by the Manufacturer and shall be accessible for review.		
188	AA-6410	(d) *Base Metals:* Base metals to be joined by brazing shall be as listed in each section of this Code and applicable to that section.		
189	AA-6410	(e) *Filler Metals:* Filler metals selected shall be one or a combination of those listed in the ASME Code, Section II, Part C, or ANSI/AWS A5.8 and shall be compatible with the brazing process used and the base metal designated on the Manufacturer's drawings.		
190	AA-6410	(f) *Processes:* Joining processes under this specification shall include torch brazing (TB), furnace brazing (FB), induction brazing (IB), resistance brazing (RB), and dip brazing (DB).		
191	AA-6410	(g) *Terms and Definitions:* Terms and definitions shall be interpreted in accordance with ANSI/AWS A3.0.		
192	AA-6410	(h) *Symbols:* Symbols used on the Manufacturer's drawings shall be in accordance with ANSI/AWS A2.4.		
193	AA-6410	(i) *Safety Precautions:* Safety precautions shall conform to the latest edition of ANSI/ASC Z49.1.		
194	AA-6410	(j) *Standard Units of Measurement:* The values stated in U.S. customary units are to be regarded as the standard. The metric (SI) equivalents of U.S. customary units as given are approximate.		
195	AA-6410	(k) *Brazing Procedure and Performance Qualification:* (1) Qualification of the Manufacturer's brazing procedure specifications and brazer and brazing operator performance shall be in accordance with the requirements of one or more of the following. (a) ASME Code, Section IX (b) ANSI/AWS C3.3 (2) Brazing of performance qualification test samples shall be performed in accordance with the Manufacturer's qualified brazing procedure for the process used.		
	AA-6420	**WORKMANSHIP**		
196	AA-6421	*Preparation of Base Metal:* Surfaces and edges to be brazed shall be free from fins, tears, cracks, and discontinuities that would adversely affect the quality or strength of the brazement. Surfaces to be brazed and surfaces adjacent to a brazement shall also be free from loose mill scale, slag, rust, moisture, grease, and foreign material that would prevent proper brazing.		
197	AA-6422	*Joint Fit-Up:* Joints to be brazed shall be brought into correct alignment within the tolerances required by the qualified brazing procedure.		
	AA-6423	**CLEANING**		

Requirement Number	Source	Requirement Text	Verification/Validation R - Review A - Analysis T - Test I - Inspection	Design Document Reference (Where is this requirement incorporated in the design)
198	AA-6423.1	Where cleaning of base metals is required, it shall be accomplished by wire brushing, grinding, blasting, solvents, pickling, or other suitable means.		
199	AA6423.2	Upon completion, the brazement and adjacent areas shall be cleaned of flux residues and oxide scale formed during the brazing process.		
	AA-6430	INSPECTION AND TESTING		
	AA-6431	VISUAL EXAMINATION		
200	AA-6431.1	Visual examination of brazed joints is used for estimating the soundness by external appearance, such as continuity of the brazing filler metal, size, contour, and wetting of filler along the joint, and where appropriate, to determine if filler metal flowed through the joint from the side of application to the opposite side.		
201	AA-6431.2	Brazed joints shall be inspected by visual means prior to mechanical or section tests. As a minimum, visual inspection shall be made. The results of the visual examination shall meet the following requirements: (a) braze metal shall be present at all edges of the joint; (b) no unfused brazing filler metal shall be present; (c) undercutting shall have a maximum depth of 5% of the base metal thickness, or 0.010 in, which ever is less; (d) individual pores shall have a maximum diameter of 0.015 in, and the minimum space between such pores shall be 0.5 in; (e) the sum of all pore diameters shall be a maximum of 0.030 in. in each linear inch of joint; (f) no cracks are permitted.		
202	AA-6431.3	Mechanical or section tests, when required, shall be accomplished in accordance with the applicable code specified in AA-6410.		
	AA-6432	NDT METHODS AND ACCEPTANCE CRITERIA		
203	AA-6432.1	When nondestructive testing other than visual inspection is required, it shall be so stated in the Manufacturer's drawings and specifications.		
204	AA-6334.2	Surface inspection, when required, shall be performed using the dye penetrant method. The standard methods set forth in ASTM E 165 shall be used for dye penetrant inspection, and the acceptance criteria shall be in accordance with AA-6431.		
205	AA-6432.3	For detecting surface or subsurface discontinuities, other nondestructive methods may be used. The standard methods set forth in Section V of the ASME Code shall be used for NDT inspection. The extent of examination and acceptance criteria shall be stipulated in the procurement documents.		
	AA-6433	INSPECTOR QUALIFICATIONS		
206	AA-6433.1	Personnel performing visual inspections shall meet the requirements of ANSI/ASME NQA-1, including Supplements 2S-1 and 2S-2, to a Level I capability and be working under the supervision of a Level I or III individual, or shall be Level II or III individuals.		
207	AA-6433.2	Personnel performing NDT shall be qualified in accordance with SNT-TC-1A. Only individuals qualified for NDT Level I and working under an NDT Level II or III individual, or individuals qualified for NDT Level II or III, may perform NDT.		
	AA6434	REPAIRS		
208	AA-6434.1	Defects in base metal or brazed joints may be repaired in accordance with written repair procedures mutually agreed upon between the manufacturer and purchaser. Repairs shall be performed by qualified brazers in accordance with the qualified Brazing Procedure Specification. Repairs shall be inspected to the original acceptance criteria.		
	AA-6500	CLEANING AND COATING		
209	AA-6510	*General:* The design specification shall specify the required coating service levels for both internal and external surfaces of the equipment. Coating level designation shall be determined based on equipment location, function, and effect of coating system on intended component or system performance.		
210	AA-6511	Service Level 1 Areas: These areas require coating systems that are essential to the attainment of the accident mitigating performance of structures, systems, and components that are essential to the prevention of , or mitigation of the consequences of, postulated accidents that could cause undue risk to the health and safety of the public. A Service Level I protective coating system shall conform to the Service Level I coating requirements specified in ANSI N512 [1] and ANSI N101.2 [2]. In addition, quality assurance requirements and documentation specified in ANSI N101.4 [3] shall also be provided. Galvanized steel and stainless steel surfaces do not require an additional protective coating system, and therefore are not subject to the requirements of this paragraph. Notes 1 The following Standard should be substituted for chemical resistance tests in ANSI N512: ASTM D 3912. 2 The following Standard should be substituted in applicable paragraphs of ANSI N101.2 regarding the DBA requirements: ASTM D 3911. 3 The following Standard should be substituted in applicable paragraphs of ANSI N101.4 or used to provide more current quality assurance requirer		

Requirement Number	Source	Requirement Text	Verification/Validation R - Review A - Analysis T - Test I - Inspection	Design Document Reference (Where is this requirement incorporated in the design)
211	AA-6512	*Service Level II Areas:* These areas require coating systems that are essential to the attainment of the intended normal operating performance of structures, systems, or components. Service Level II protective coating systems may conform to Service Level I coating specified by ANSI N512 quality assurance requirements, except that documentation required may be defined in the Design Specification or Manufacturer's specification. (Documentation specified in ANSI N101.4 is not required for Level II coating systems.) The coating systems shall be designed for the applicable post-accident service conditions for the specific surfaces, but not for the in-containment post-accident service conditions.		
212	AA-6513	*Service Level III Areas:* These areas require coating systems that are not essential to either the normal or accident operating performance of a structure, system, or component. Coating systems designated as Coating Level III shall conform to the specific equipment Manufacturer's specifications. Documentation shall be defined in the Design Specification or Manufacturer's specification. (ANSI N101.4 documentation is not required.)		
213	AA-6514	*Stainless Steel Surfaces:* Stainless steel surfaces shall not be coated.		
214	AA-6520	*Surface Preparation:* Surface preparation for carbon steel shall meet the requirements specified in Section 8 of ANSI N512. Carbon steel surface preparation for Service Level I coatings systems must be blast cleaned to the requirements of SSPS SP10.		
	AA-6530	COATING		
215	AA-6531	*Scope of Work:* Outline the areas to be coated or otherwise protected.		
216	AA-6532	*Coating System Selection and Evaluation:* Provide specific guidelines and requirements for coating system tests and required criteria for tested material evaluation.		
217	AA-6533	*Quality Assurance Manual:* The quality assurance manual must address the 10 CFR 50, Appendix B, requirements and pertinent requirements of ANSI N101.4.		
218	AA-6534	*Coating Inspector's Qualifications:* The inspector's qualifications must meet the requirements of ANSI/ASME NQA-1, including supplements of 2S-1 and 2S-2.		
219	AA-6535	*Coating Applicator's Qualifications:* These requirements must be established in application procedures for each specific substrate and material to be used prior to allowing the applicator to apply any material to surfaces installed in Service Level I areas.		
220	AA-6536	*Safety and Environmental Control:* Ventilation, temperature, and humidity must meet the coating Manufacturer's requirements. Proper illumination, safe equipment, scaffolding, and procedures regarding work practices must be followed.		
221	AA-6537	*Quality Control Procedures:* These procedures must be developed by the coating applicator and approved by the Owner or his authorized representative.		
222	AA-6538	*Coating Material Certification:* The coating Manufacturer must provide product identity certification that the material meets the requirements of ANSI N101.2, ANSI N101.4, and ANSI N512, or any other specific requirements.		
223	AA-6539	*Surface Preparation:* Surface preparation must be defined as to the degree of cleanliness and required anchor profile in the steel surface. The blast abrasives to be used and cleaning residual contaminants from blast abrasives must be addressed. The time elapsed between surface preparation and the first coat of coating material application should be indicated to prevent any rust bloom appearing on the blasted surface.		
224	AA-6539.1	*Coating Application and Cure Requirements.* Unacceptable coating application, with respect to overspray, dryspray, sags, runs, mudcracking, blisters, pinholes, insufficient film buildup or excessive film buildup, and other defects must be addressed. Curing requirements at various temperature ranges should be addressed for each coat of specific material used.		
225	AA-6539.2	For carbon steel, the Design Specification or Manufacturer's specifications shall state the requirements for prime coat and finish coat thicknesses. Galvanized steel surfaces from which the coating has been removed during fabrication shall be coated with an appropriate qualified material per ANSI N101.2 to a thickness equivalent to the original coating.		
	AA-6540	REPAIR OF COATING SYSTEM		
226	AA-6540	*Repair of Coating System:* (a) Service Level I and Service Level II coating systems that require repair due to damage or defects in the original coating system shall be repaired in accordance Chapter 11 or Chapter 12 (if coating has been in place for several moths or years) of *Manual of Coating Work*. (b) Galvanized surfaces that have been damaged shall be repaired with an appropriate qualified material per ANSI N101.2. Thickness of coating shall be equivalent to the original coating.		
	AA-6550	INSPECTION		

Requirement Number	Source	Requirement Text	Verification/Validation R - Review A - Analysis T - Test I - Inspection	Design Document Reference (Where is this requirement incorporated in the design)
227	AA-6560	*General:* Inspection for shop and field work on Level I and II coating systems shall conform to Section 10 of ANSI N512. The design specification or Manufacturer's specifications shall include the acceptance criteria for the degree of continuity of coating.		
	AA-6560	QUALITY ASSURANCE REQUIREMENTS AND DOCUMENTATION		
228	AA-6560	*General:* (a) Coating level I systems shall conform to the quality assurance requirements of ANSI N101.2, ANSI N101.4. Level II and III coating system documentation shall conform to Manufacturer's or Design Specification requirements. (b) Coating Level I documentation in accordance with the requirements of ANSI N101.2, ANSI N101.4, and ANSI N512 shall be maintained on file. Documentation shall be provided to the Owner in accordance with the requirements of AA-8000.		
	AA-6600	INSTALLATION REQUIREMENTS		
229	AA-6610	Handling and Rigging: (a) Handling and rigging requirements for assembled components or subassemblies shall be identified in Manufacturer's installation procedures in accordance with AA-7000. Manufacturer's procedures shall include the classification of the item to be handled as defined in ANSI/ASME, NQA-2. (b) Items that will be handled or supported during installation by a crane or other lifting device shall be equipped with lifting eyes or other means to maintain the item in proper orientation without exceeding structural design integrity of the assembly while being handled or supported. The design specification shall identify any special rigging requirements or restrictions for final erection.		
230	AA-6620	*Field Assembly:* (a) Where equipment requires component assembly during final installation, the equipment manufacturer shall provide detailed written procedures for making the proper final assemble. Installation procedures shall include requirements for al other interfacing services, such as electrical, piping, supports, and ductwork. Installation procedures shall also address assembling, setting, erecting, leveling, aligning, securing, doweling, connecting, cleaning, lubricating, final adjusting, inspecting, and all other operation necessary to make the equipment operable. (b) The equipment Manufacturer shall be responsible for advising the Owner or his designee of field connections or services required for the proper and safe operation of the equipment as specified in the Design specification. These requirements shall be explained in the installation procedures. The equipment Manufacturer shall make provisions in the design of his equipment for the required field connections. (c) Alignment markings where required for the proper field positioning and connection of parts or subassemblies shall be shown on the Manufacturers installation drawings.		
231	AA-6630	*Temporary Field Attachments:* (a) Field attachments and ducts not specified in the design drawings, the Design Specification, or this Code are permitted only when authorized in writing by the equipment Manufacturer, Owner, or his designee. The method of attachment shall meet the requirements of the drawings, specifications, or this Code, as applicable, and neither the attachment nor the method of attachment shall adversely affect present or future performance, reliability or structural integrity or the item or the installed system. Temporary attachments shall be removed before delivery or final acceptance of the installed system, whichever is applicable.		
232	AA-6630	*Temporary Field Attachments:* (b) Unauthorized attachments shall not be made to equipment or ducts and, when discovered, shall be removed in a manner hat will not affect the immediate or future performance, reliability, or structural integrity of the item or the system. The equipment Manufacturer, or the Owner or his designee, as applicable, shall be advised of the unauthorized attachment and shall review the impact of such attachment. The method of removal or repair, or both, if necessary, shall be authorized by the equipment Manufacturer or the Owner or the Owner's designee. If the attachment does adversely affect immediate or future performance or reliability, and removal of the attachment or repair dies not eliminate the adverse result, the item affected shall be replaced.		
	AA-7000	PACKAGING, SHIPPING, RECEIVING, STORAGE, AND HANDLING		
233	AA-7110	*General:* This Article contains general requirements for packaging, shipping, receiving, storage, and handling of components, parts, and equipment. The		
234	AA-7120	*Responsibility:* The requirements for the activities covered by this Code are identified in this article and in each Code section. The establishment of practices and procedures, and the providing of resources for personnel, equipment, and services necessary to implement the requirements of this Code, may be delegated to other organizations, and such delegation shall be documented. However, it is the responsibility of each organization performing work covered by this Code to comply with procedures and instructions issued for the project and to conform to the requirements of this Code as it is applicable to its work.		

Requirement Number	Source	Requirement Text	Verification/Validation R - Review A - Analysis T - Test I - Inspection	Design Document Reference (Where is this requirement incorporated in the design)
235	AA-7200	*General Requirements:* This article contains requirements that are to be fulfilled by organizations responsible for performing any segment of work described in each Code section. This article establishes measures acceptable for the packaging, shipping, receiving, storage, and handling of air and gas treatment items to be incorporated in the nuclear power plant and for the inspections, examinations, testing, and documentation to verify conformance to specified requirements. This article is intended to supplement ANSI/ASME NQA-2, Part 2.2. The provisions of this article shall replace these respective sections and subsections of ANSI/ASME NQA-2, Part 2.2. The balance of ANSI/ASME NQA-2, Part 2.2, shall apply and be part of this Code. Terms used in Article AA-7000 that relate to quality assurance are defined in ASME NQA-1, Supplement S-1, Terms and Definitions. Additional terms are defined in ANSI/ASME NQA-2, Part 2.2.		
236	AA-7210	*Planning, Procedures, and Instructions:* The Design Specification and drawings for air and gas treatment items shall include provisions for accomplishing the packaging, shipping, receiving, storage, and handling activities described in this Code. The preparation and control of procedures and work instructions for these activities shall be provided. Sufficient details shall be included to assure compliance with the provisions of AA-7000 and each Code section.		
237	AA-7220	*Personnel Qualifications:* Those personnel who perform inspection, examination, and testing activities at the job site to assure compliance to this Code shall be qualified in accordance with ANSI/ASME NQA-1, Supplement 2S-1 and 2S-2. Offsite inspection, examination, or testing shall be audited and monitored by personnel who are qualified in accordance with ANSI/ASME NQA-1, Supplements 2S-1 and 2S-2.		
238	AA-7230	*Classification of Items:* The requirements for activities covered by this Article (AA-7000) are divided into four levels with respect to protective measures to prevent damage, deterioration, or contamination of the items, based upon the important functional characteristics of the item with respect to safety, reliability, and operation. It should be recognized, however, that within the scope of each level there may be a range of controls and that the detailed requirements for an item are dependent on the importance of the item to safety or reliability. Items, once classified, shall be restricted to that level or higher for each of the packaging, shipping, receiving, storage, and handling operations. Any package unit or assembly made up of items of different levels shall be classified to the highest level designated for any respective parts, unless the higher level subassembly or part can be packaged to its respective level while still attached to the total assembly or is totally protected within the assembly. The balance of the unit or assembly may be classified to a lower level. If unit is disassembled, a level shall be indicated for each part.		
239	AA-7230	*Classification of Items:* Items covered by this Code are given the appropriate protection classification level in accordance with the provisions of ANSI/ASME NQA-2, Part 2.2, Section 2, and these levels and detailed requirements are delineated in each equipment section of this Code.		
	AA-7300	PACKAGING		
240	AA-7310	*General:* This subarticle contains the requirements for packaging items for protection against corrosion, contamination, physical damage, or any effect that would lower the quality or cause the item to deteriorate during the time it is shipped, handled, and stored. Implementation of Subarticle AA-7300 shall be accomplished by applying the appropriate criteria contained in ANSI/ASME NQA-2, Part 2.2, concerning cleaning, preservatives, desiccants, inert gas blankets, cushioning, caps and plugs, barriers and wrapping materials, tapes, blocking and bracing, containers, marking, other quality assurance provisions, and documentation.		
241	AA-7320	*Level of Packaging:* The packaging criteria are divided into four levels corresponding to the levels designated by AA-7230.		
	AA-7400	SHIPPING		
242	AA-7410	*General:* This subarticle covers the requirements for loading and shipment of items as defined in AA-7230. Described herein are environmental protection during transit, procedures to minimize damage in transit, precaution required when handling items during loading and transit, and identification and inspection on overseas shipments. The mode of transportation used shall be consistent with the protection classification of the item and with the packaging methods employed.		
	AA-8000	QUALITY ASSURANCE		
	AA-8100	GENERAL		
243	AA-8110	*SCOPE AND APPLICABILITY:* This article contains general requirements for the quality assurance of components, parts, and equipment. The requirements of ASME NQA-1 apply to the component, parts, and equipment covered by this Code. The requirements of Article AA-8000 are applicable to the extent they are specifically invoked by each Code section. Additional or supplemental requirements may also be given in each Code section.		

Requirement Number	Source	Requirement Text	Verification/Validation R - Review A - Analysis T - Test I - Inspection	Design Document Reference (Where is this requirement incorporated in the design)
244	AA-8120	*Responsibility:* The organization invoking this Code for the design, construction, and acceptance testing of equipment, parts, and components used in nuclear safety-related air and gas treatment systems in nuclear facilities shall be responsible for specifying any additional requirements and appropriately relating them to specific items or services.		
245	AA-8130	*Responsibility of Fabricators, Material Suppliers, and Material Manufacturers:* (a) Some or all of the responsibilities of lower tier organizations may be assumed by any higher tier organization (e.g., the Owner may assume some of the responsibilities, such as certifying test results, of the Material Manufacturer.) The organization assuming lower tier responsibility shall meet the requirements noted herein for that organization. (b) In addition to the specific responsibilities delegated to the Fabricator, Material Supplier, and Material Manufacturer by the Owner of designee, the following shall apply:		
246	AA-8130	(1) each member of the chain depicted in Figure AA-8130 shall be responsible for evaluating and qualifying the suppliers of contracted services or material from the next level down, i.e., Fabricator shall be responsible for evaluating and qualifying the Material Supplier's quality assurance program, and so forth;		
247	AA-8130	(2) each member of the chain depicted in Figure AA-8130 shall be responsible for notifying the party that qualified their program of planned modifications that might affect the quality of the delivered product;		
248	AA-8130	(3) the Fabricator, Material Supplier, and Material Manufacturer shall be responsible for establishing and maintaining and identification and verification program for the traceability of material while under his control;		
249	AA-8130	(4) the Fabricator, Material Supplier, and Material Manufacturer shall be responsible for controlling quality during manufacture and fabrication, including control of manufacturing processes, testing, examination, repair, and treatment of the material, including subcontracted services.		
250	Fig. AA-8130	*Fig. AA-8130, Hierarchy of Responsibility* *Owner -> Fabricator -> Material Supplier -> Material Manufacturer*		
	AA-8200	IDENTIFICATION AND CONTROL OF ITEMS		
251	AA-8210	*Documentation:* Documents for procurement of material and subcontracted services shall include requirements to the extent necessary to assure their compliance with ANSI/ASME NQA-1 and the additional requirements of this paragraph. Measures shall be established to assure that all purchased and fabricated material and services conform to the requirements of this paragraph. Measures shall be established for identification and control of material, including partially processed material, throughout manufacturing, fabrication, and the shipping processes. These measures shall assure that identification is maintained either on the material or on records traceable to the material through manufacture and fabrication. Welding filler metal for use in repair of the material shall also be controlled in accordance with this paragraph.		
252	AA-8220	*Identification and Completed Material:* (a) Identification of material from the Material Manufacturer shall consist of marking the material with the applicable specification and grade of material, heat number or heat code of the material, and any additional marking required by this Section to facilitate traceability of the reports of the results of all tests and examinations performed on the material; except that, for those materials for which the Material Manufacturer's Certificates of Compliance are allowed, heat numbers or heat code identification need not be indicated either on the material or the Certificates. Alternatively, a marking symbol or code that identifies the material with the material certification may be used, and such symbol or code shall be explained in the Certified Material Test Report or Certificate of Compliance, as applicable.		
253	AA-8220	*Identification and Completed Material:* (b) Physical identification on individual material used in the assembly of a component by heat number or code or specification and grade need not be done provided the completed assembly is marked with a unique identification number that is traceable to documentation that identifies the material used in the assembly by the requirements of AA-8220(a).		
254	AA-8230	*Marking Requirements for Small Products:* (a) Except as required by the material specification, small parts need not be individually marked provided they are packed in packages or containers that shall be clearly identified by legible marking to ensure positive identification of the material up to the point of use. (b) Welding and brazing materials shall be clearly identified by marking on the package or container to ensure positive identification of the material. The package or container marking shall include the heat or lot number as applicable, a control marking code that identifies the materials with the Certified Material Test Report, and other information such as specification, grade, classification number, supplier's name, and trade designation.		
255	AA-8240	*Certified Material Test Reports:* The Certified Material Test Report, when required, shall include the actual results of all required chemical analyses, mechanical tests, and examinations.		

Requirement Number	Source	Requirement Text	Verification/Validation R - Review A - Analysis T - Test I - Inspection	Design Document Reference (Where is this requirement incorporated in the design)
256	AA-8250	*Records of Examinations and Tests:* All characteristics required to be reported by the material specification and by this Section shall be traceable to the results recorded. Records shall identify the procedure and revision to which an examination or test was performed and include the recorded results of examinations and tests. Measures shall be established so that the status and results of any required examinations and tests can be determined for the material.		
257	AA-8300	*Quality Assurance Records:* Documentation required by this Section and each of the other sections shall be prepared, maintained, and submitted to the Owner for recording as required by the applicable section and ANSI/ASME NQA-1.		
	AA-9000	NAMEPLATES AND STAMPING		
258	AA-9110	*Scope and Applicability:* This Article contains the general requirements of nameplates for components and equipment. The requirements of this Article are applicable to the extent they are specifically invoked by the other Code sections. Unique requirements are given in each Code section. Stamping is required only for those components constructed in accordance with the ASME Code. No other third party inspection or certification is required by this Code.		
259	AA-9120	*Requirements:* Each item shall have a nameplate, except as otherwise permitted by this Code. Nameplate information shall be as required by (a) through (e) below: (a) Manufacturer's name; (b) Manufacturer's serial number and, if applicable, model number; (c) Capacity in appropriate units; (d) Operating temperature and pressure; (e) Other data prescribed by the specific equipment section of this Code. The data shall be in characters not less that 3/32 in. (2.4 mm) high. All nameplate markings shall be stamped, etched, cast, or impressed on the nameplate. Nameplates shall be of a noncorrosive material. Stamping directly on items, where permitted by the respective equipment section of this Code and used in lieu of a nameplate, shall be done with blunt nose continuous or blunt nosed interrupted dot die stamps. The selected marking method shall not result in any harmful contamination or sharp discontinuities.		
260	AA-9140	*Attachment of Nameplates:* If the nameplate is marked before it is affixed to the item, the Manufacturer shall ensure that the nameplate with a correct marking has been applied to the appropriate item. The nameplate shall be attached by a method that will not affect the structural or operational integrity of the item and that shall assure permanent attachment during the life expectancy of the component.		
261	AA-9130	*Location of Nameplates:* The location of the nameplate shall be shown on the as-constructed drawing. It should be readily visible when the component is installed. Nameplates shall be located so insulation does not obscure nameplate data.		
	DA	SECTION DA: DAMPERS AND LOUVERS		
	DA-1000	SCOPE		
	DA-1200	LIMIT		
262	DA-1210	*Exclusion of Items:* Valves whose design, manufacture, test, and installation are covered by the ASME Code, Section III, or ASME B31.1, are excluded from this Section even though they may be used to perform the function of a damper.		
	DA-3000	MATERIALS		
263	DA-3110	*Materials of Construction:* Materials used in the construction of frames, blades, shafts, and linkages shall conform to requirements of specifications for materials given in Table DA-3110. Note: refer to Table DA-3110 in AG-1-2003.		
264	DA-3120	*Allowable Stress:* Allowable stress values for the design of frames, blades, shafts, and linkages are specified in AA-4000. At temperatures above 650 degrees F for ferrous material or 200 degrees F for nonferrous material, the special limitations cited in DA-3211 shall apply.		
265	DA-3130	*Bearing Material:* Bearing materials shall conform to the requirements of DA-4250.		
266	DA-3140	*Seal Material:* Seal materials shall conform to the requirements of DA-4260.		
	DA-3200	SPECIAL LIMITATIONS ON MATERIALS		

Requirement Number	Source	Requirement Text	Verification/Validation R - Review A - Analysis T - Test I - Inspection	Design Document Reference (Where is this requirement incorporated in the design)
	DA-3210	**METALS**		
267	DA-3211	*Physical Properties Reduction:* The reduction in the physical properties of metals at higher temperatures must be recognized and factored into the design of dampers used in high temperature application, particularly where fire hazard is involved.		
268	DA-3212	*Galvanic Corrosion:* The possibility of galvanic corrosion due to the relative potentials of aluminum, copper, and their alloys should be considered when used in conjunction with each other, or with steel or other metals and their alloys.		
269	DA-3213	*Corrosive Vapors:* Aluminum and zinc shall not be used in the presence of corrosive vapors unless protected by coatings or other suitable means designed to prevent deterioration of the metal.		
270	DA-3220	*Nonmetallic Materials:* The use of nonmetallic materials such as plastics, elastomers, and similar substances is permitted in the construction of components provided that in the selection of these materials, consideration is given to: (a) destruction where fire hazards exist, including toxicity; (b) degradation of properties caused by temperature increase, radiation exposure, chemical exposure, and aging; and (c) maintainability.		
271	DA-3230	*Deterioration of Materials in Service:* It is the responsibility of the Owner or his designee to identify the environment in which the components must operate so that the Manufacturer can select the grade of materials to meet the conditions stated in the Design Specification.		
272	DA-3300	*Certification of Materials:* The manufacturer shall make available, as a minimum, certified test reports of chemical and physical properties of material and hardware for stress components such as related accessories including frames, blades, shafts, and linkages. For those ASTM materials which do not have physical testing required by the ASTM specification, testing should be performed per ASTM A 370. All other components used in the construction of the damper shall be provided with a Manufacturer's Certificate of Compliance covering the ASME or ASTM material specification, grade, and class, if applicable.		
	DA-4000	**DESIGN**		
273	DA-4100	*General Design:* Design of dampers and louvers shall be in accordance with the requirements of Section DA and of those portions of Section AA invoked in Section DA.		
274	DA-4110	*Requirements of the Design Specifications:* Design specifications prepared by the Owner or his designee in sufficient detail to provide a complete basis for design and manufacture in accordance with this Code shall include, as applicable: (a) reference to this Code (b) function, as defined in DA-1320 (c) configuration, as defined in DA-1330 (d) maximum allowable seat and frame leakage and the specific differential pressures, ad defined in DA-1340 and Mandatory Appendix DA-1 (e) pressures, as defined in DA-1350 (f) temperatures, as defined in DA-1360 (g) volumetric flow rate at defined temperature, pressure, and density (h) maximum relative humidity of the air or gas stream (i) maximum design pressure drop at design volumetric flow rate (j) composition, concentration, and nature of the entrained contaminants in the air or gas stream (k) normal operating position and failsafe position of blades		

Requirement Number	Source	Requirement Text	Verification/Validation R - Review A - Analysis T - Test I - Inspection	Design Document Reference (Where is this requirement incorporated in the design)
275	DA-4110	*Requirements of the Design Specifications:* (l) installation parameters (m) mounting configuration and support, i.e., flange mounted, inside-of-duct mounted, wall or cantilevered mounting (n) orientation of damper and direction of airflow (o) blade orientation relative to frame (p) maximum closure and opening time (q) actuator data, as required by DA-4300 (r) anticipated number of operating cycles (e.g.. specify number for two-position or state "continuous operation" for modulating service) (s) allowable materials per DA-3000 (t) special requirements for blades, frames, linkages, seals, and bearings (u) accessories required and mounting location (v) any and all anticipated internal and external loadings other than pressures (w) combination of loading conditions, seismic requirements, and the design transients applicable to the appropriate service level per AA-4000		
276	DA-4110	*Requirements of the Design Specifications:* (x) radiation integrated life dose and maximum dose rate (rad/unit time) (y) finish and coating requirements (z) fire resistance rating as 1-1/2 or 3 hr		
277	DA-4120	*Requirements of the Manufacturer:* When required by the Design Specifications, documentation provided by the Manufacturer to the Owner or his designee shall include the following, as applicable: (a) mounting connection details (b) weight and center of gravity (c) service connections, size, type, and locations (d) pressure drop at rated flow (e) maximum seat and frame leakage at design pressures (f) maximum closure and opening time at stated conditions (g) materials of construction (h) bearing design life (i) seal design life (j) actuator torque supplied (k) damper or louver torque required (l) actuator environmental and seismic qualifications (m) verification of structural integrity, performance, and qualification in accordance with AA-4000 (n) actuator position or orientation (o) UL fire resistance rating and UL installation instructions		
	DA-4130	PERFORMANCE REQUIREMENTS		
278	DA-4131	*Seat Leakage:* Seat leakage shall be equal to or less than the amount shown in Mandatory Appendix DA-I for the class specified in the Design Specification.		
279	DA-4132	*Frame Leakage:* Frame leakage shall be equal to less than the amount shown in Mandatory Appendix DA-I for the class specified in the Design Specification		
280	DA-4133	*Pressure Drop:* Pressure drop shall be less than or equal to that stated in the Design Specification at the design volumetric flow rate.		
281	DA-4134	*Fire Ratings:* Fire Dampers shall have a 1-1/2 or 3 hr rating in accordance with UL-555 as determined by NFPA 90A and NFPA 803.		
282	DA-4135	*Fire Damper Closure:* The fire damper shall close against the specified volumetric flow rate and specified operating pressure.		
283	DA-4136	*Cycle Time:* The damper must cycle full open to full closed or full closed to full open within the time specified in the Design Specification.		
	DA-4200	TECHNICAL REQUIREMENTS		
	DA-4210	STRUCTURAL		

Requirement Number	Source	Requirement Text	Verification/Validation R - Review A - Analysis T - Test I - Inspection	Design Document Reference (Where is this requirement incorporated in the design)
284	DA-4211	*General:* Dampers or louvers shall be designed in accordance with the structural requirements given in AA-4000. Structural requirements and load definitions are given in DA-4212 through DA-4214.		
285	DA-4212.1	*Methods of Support:* A damper or louver assembly may be supported by one or more of several methods. It may be line supported as an assembly inserted into a run of duct; it may have its support at its end attachments to the duct and be totally supported by that line of duct; or it may be flange mounted to a bulkhead type of building structure of auxiliary structure. (a) *Line Supported Assembly:* The support boundary for this case shall be the interface flanges or other mechanical connections designed to transfer all components of loads across the joints. (b) *Bulkhead of End Supported Assembly:* The support boundary for this case shall also be the interface flanges or other mechanical connections or structural connections designed to transfer all components of load. (c) *Side, Top, or Bottom Supported Assembly:* The support boundary for this case shall be the attachment point for the assembly. Although support to the building superstructure, auxiliary steel, equipment foundation, or other structure represents ground for the damper, that support is not		
286	DA-4212.2	Documentation: The damper or louver Manufacturer shall be responsible for providing all information necessary to define the support boundary interfaces. The interface control information to be specified shall include but not necessarily be limited to the following: (a) identification of any special support requirements as well as the configuration and size of the damper flanges; (b) magnitudes and directions of all loads imposed on the anchorage points, including all static, dynamic, and operational loads resulting from the installed assembly. Load data shall be provided in a form which shall allow combinations to be considered as required in AA-4000; (c) other information, such as bending moments, shear forces, axial loads, torsional moments or stiffness requirements necessary to assure that the damper or louver can perform its required safety function under all design conditions.		
287	DA-4213	*Loads:* Loads to be considered are as given in AA-4211 and AA-4212 with the following clarifications.		
288	DA-4213.1	*Normal Loads:* Normal loads *N* shall include: (a) actuator load: the load or loads imposed by the actuator to a specific area of the assembly. (b) deadweight load: the load imposed by the weight of all components of the assembly. (c) externally concentrated load: the load or loads imposed by the application of an external force to a limited area of the assembly. (d) normal equipment interface load: the normal externally applied load or loads from other equipment attached to the assembly. (e) operating pressure load: the load resulting from the maximum positive or negative differential pressure which may occur during normal operation. Included are loads imposed by normal design airflows and impact pressures resulting from rapid change or other devices in a system.		
289	DA-4213.2	*Thermal Loads:* Thermal loads *T* shall include loads resulting from constraint of forces and displacements caused by temperature variations.		
290	DA-4213.3	*Other Loads:* Other specific load conditions such as shock loads due to pressure transients shall be provided in the Design Specification to allow loads to be combined for the service levels as required under AA-4212 and compared to the applicable service limits required under AA-4214 and AA-4230 and other criteria imposed under AA-4240 and stress limits of this Section.		
291	DA-4214	*Structural Verification:* The technical and documentation requirements of AA-4000 shall apply to verification of design by analysis, test, or comparison.		
292	DA-4215	*Special Considerations:* (a) Frame deflection under normal and upset plant conditions (Service Levels A and B) shall not exceed 1/360 of the span in any direction, or 1/8 in. (3.175 mm), whichever is less. (b) Blade edge or center line deflection under normal and upset plant conditions (Service Levels A and B) shall not exceed 1/360 of the blade length (or diameter) or 1/8 in. (3.175 mm), whichever is less. (c) The blade edge and center line deflection under loads due to normal plant conditions shall not allow the leakage criteria to be exceeded. (d) Fire damper design shall be based on loads imposed on damper blades when closing with design volumetric flow rate and pressures present.		

Requirement Number	Source	Requirement Text	Verification/Validation R - Review A - Analysis T - Test I - Inspection	Design Document Reference (Where is this requirement incorporated in the design)
293	DA-4220	*Thermal Expansion:* To prevent binding and restraint of free movement, the design shall provide for the relative motions that occur between components due to variations of temperature and coefficients of expansion. Such provisions for differential expansion shall include, as a minimum: (a) blade end clearances (b) bearing clearances (c) longitudinal movement of the shafts (d) sealing capabilities		
	DA-4230	TORQUE		
294	DA-4231	*Torque Determinations:* In determining the torque required to actuate the blades, the Manufacturer shall consider the blade position and direction of the applied torque to produce the desired movement. At the maximum specified operating pressure this determination shall include, as a minimum, the following torque components: (a) breakaway torque (b) dynamic torque (c) friction torque (d) seating torque		
295	DA-4232	*Actuator Torque:* The actuator and associated linkage shall deliver to the damper or louver a minimum of 1.5 times the maximum torque as determined in DA-4231, except for self-contained actuators used to counterbalance a specific force, and must be designed to match the required torque. Actuators shall be evaluated in both directions for the maximum torque, at the beginning of the blade movement, while stroking the blades through the full range of movement.		
	DA-4240	LINKAGE		
296	DA-4241	*Linkage Components:* The linkage includes the arms, brackets, pivots, bars, levers, and fasteners required to perform the following functions: (a) interconnect the blades of multibladed dampers or louvers so they act in unison; (b) interconnect the actuator and blades so as to provide the desired operation.		
297	DA-4242	*Linkage Design:* Linkage design shall include the following minimum requirements. (a) Brackets, arms, and levers shall be of a length and stiffness to provide stable operation of the blades at the maximum specified operating pressure and airflow without flutter or binding at all blade positions. (b) The linkage system shall be designed to transmit sufficient torque to each blade to set the seals of each and every blade at the maximum specified operating pressure and airflow to limit leakage to less than the specified leakage. (c) All linkage components shall be designed to transmit a minimum of 1.5 times the torque required by DA-4231 without exceeding the allowable stress listed in AA-4000. (d) If a linkage system is designed to be field adjustable, suitable locking devices such as jam nuts, etc., shall be provided. (e) The linkage system shall be designed to be compatible with the actuator selected for the application.		
	DA-4250	BEARINGS		
298	DA-4251	*General Application:* (a) Bearings shall permit axial shaft movement to provide for operating clearances and differential expansion in both vertical and horizontal installations. (b) Bearing materials shall be selected for the loading and environment conditions to which the bearing will be subjected.		
	DA-4252	BEARING TYPES		
299	DA-4252.1	*Metallic Sleeve Bearings:* Sintered sleeve bearing material shall be lubricant-impregnated bronze or stainless steel. Solid sleeve bearing material shall bronze or stainless steel and shall be lubricated prior to shipment, and provisions should be made for lubrication in the field.		
300	DA-4252.2	*Nonmetallic Sleeve Bearings:* Nonmetallic sleeve bearings, i.e., phenolic, nylon, and similar materials, may be used subject to the limitations of DA-3220.		
301	DA-4252.3	*Rolling Element Bearings:* Premounted bearing assemblies, flanges, or pillow blocks shall be self-aligning and mounted in such a manner as to be replaceable. Grease fittings shall be provided when the lubricant must be periodically renewed. Flanges and pillow blocks are to be made of steel, malleable iron, or cast iron.		

Requirement Number	Source	Requirement Text	Verification/Validation R - Review A - Analysis T - Test I - Inspection	Design Document Reference (Where is this requirement incorporated in the design)
302	DA-4253	*Bearing Design:* (a) Bearing running surfaces of sleeve bearings shall have a finish as recommended by the bearing Manufacturer. (b) Sleeve bearings shall be contained to prevent rotational movement except between the intended bearing surfaces. (c) Sleeve bearings shall have a bearing load surface diameter difference as recommended by the bearing Manufacturer to provide rotational clearance. (d) Sleeve bearing wall thickness shall be as recommended by the bearing Manufacturer. (e) Rolling element bearings shall be sized to allow bearings to be slipped onto the shaft. The maximum clearance in shaft diameter shall be as recommended by the bearing Manufacturer, plus clearance for thermal expansion.		
303	DA-4254	*Bearing Loading:* (a) Sleeve bearing loading on the radial and thrust load areas shall not exceed 67% of the bearing Manufacturer's recommended static load rating. (b) Sleeve bearing radial load area shall, as a minimum, be equal to one –quarter of the diameter times the length supported by the bearing housing or damper/louver frame. (c) When sleeve bearings are subjected to thrust loads, a thrust washer shall be used to transmit the load to the bearing, or the load transmitting member shall meet the requirement of DA-4252.1. (d) Maximum radial or thrust loading on rolling element bearings shall not exceed the bearing Manufacturer's recommended static load rating. (e) The calculated load on each bearing shall consist of all design forces applied to that bearing, including that of the actuator and linkage.		
	DA-4260	SEALS		
304	DA-4261	General: Seals may be utilized to reduce seat leakage and frame leakage to the degree required by the design specification, The control of seat leakage requires seals such as metal or elastomer blade edges, stops, or seats. Control of frame leakage may require shaft seals such as stuffing boxes or cover plates.		
305	DA-4262	*Design:* The seal design shall maintain the specified leakage limits during the design life of the seal. Where the design life of the assembly exceeds the life expectancy of the seal material, the seals shall be replaceable, and the means of attaching the seal or installing the packing in a stuffing box shall be so designed to facilitate their replacement. When environmental or system conditions prevent the use or the replacement of elastomer seals, metal seals or seats shall be considered.		
306	DA-4263	*Material:* Selection of seal material by the damper Manufacturer shall be based on specific system design performance requirements and environmental conditions to which it is exposed. Physical characteristics of the seal material, such as compression set, tensile strength, hardness, and elasticity, must be verified by generic or individual tests prior to determining the material to be used for a particular seal as well as determining the design life of that seal. The design life of the seal is the length of time that the seal will function properly while the seal material experiences mild degradation of its molecular structure caused by the aging process of the environment.		
	DA-4270	FRAME CONSTRUCTION		
307	DA-4271	*Frame Construction Class A or B:* Dampers requiring frame construction to Leakage Rate Classes A or B (see Mandatory Appendix DA-I) shall be provided with stuffing boxes, gasketed cover plates, or other sealing devices to reduce frame leakage to less than or equal to that stated in the Design Specification.		
308	DA-4272	*Gasket and Packaging Material Requirements:* Gasket and packing materials shall conform to the requirements of DA-3220, DA-3230, and DA-4263.		
	DA-4280	MOUNTING OF ACTUATORS AND ACCESSORIES		
309	DA-4281	*Mounting Structure:* Each actuator and/or accessory shall be provided with a rigid structure suitable for mounting such devices.		
310	DA-4282	*Accessibility:* The arrangement of actuators and accessories shall provide accessibility for removal and replacement of each component.		
311	DA-4283	*Mounting Structure Material:* The structure for mounting actuators and accessories shall be fabricated of material listed in Table DA-3100. Structures shall be designed as required by AA-4000.		
312	DA-4284	*Attachment of Actuators and Accessories:* Actuators and accessories shall be attached to the mounting structure with removable fasteners, of material listed in Table DA-3100, sized to conform to the stress limitations stated in AA-4000.		

Requirement Number	Source	Requirement Text	Verification/Validation R - Review A - Analysis T - Test I - Inspection	Design Document Reference (Where is this requirement incorporated in the design)
313	DA-4285	*Linkage Adjustability:* The actuator mounting or linkage shall permit adjustment to achieve the required positioning of the blades at each end of the actuator movement.		
	DA-4300	ACTUATORS		
314	DA-4311	*Torque Required:* The actuator shall be capably of providing the torque required by DA-4232.		
315	DA-4312	*Forces and Loads On Actuators:* Determination of actuator capability shall include consideration of forces transmitted to the actuator directly, through the mounting, and through the linkage; especially side loads on extended rods, and impact loads caused by acceleration and deceleration of blades.		
316	DA-4313	*Acceleration and Deceleration of Loads:* Actuator design shall include consideration of loads caused by acceleration and deceleration of connected components such as blades, springs, and counterbalances.		
317	DA-4314	*Actuator Voltage or Pressure Load Rating:* The actuator rating shall be based on the minimum specified voltage or pressure.		
318	DA-4315	*Power Actuator Specification Requirements:* The Design Specification shall include the following as a minimum to establish requirements for actuator performance: (a) function (1) two-position or modulating (2) fail open, closed, or last position (3) power to open or power to close (b) power source (1) type (such as electric, pneumatic, hydraulic) (2) characteristics (such as voltage, pressure, and their ranges) (c) control signal characteristics (d) frequency of actuation (e) damper opening and closing time (f) environmental conditions (g) mounting location and any limitations on space and orientation (h) manual override requirements (i) accumulator sizing requirements (j) actuator environmental and seismic qualifications (k) type of motion (linear or rotary)		
319	DA-4320	*Manual Actuators:* Manual actuators should be equipped with locking devices and position indicators.		
320	DA-4321	*Torque Requirements:* Manual actuators shall be capable of delivering the torque required by DA-4232. Manual actuator components shall be sized as required by AA-4000.		
321	DA-4322	*Forces and Loads on Actuators:* Determination of manual actuator capability shall include consideration of forces transmitted to the actuator directly and through the linkage, including side loads on extended rods.		
322	DA-4323	*Maximum Input Forces:* Input force required to operate manual actuators shall not exceed 25 lb.		
323	DA-4330	*Self-contained Actuators:* Self-contained actuators shall be capable of delivering the torque required by DA-4231.		
324	DA-4340	*Heat or Temperature Operated Actuators:* Heat or temperature operated actuators such as fusible links shall be in accordance with NFPA 90A.		
	DA-4400	ACCESSORIES		
325	DA-4410	*Accessory Requirements:* As required by the Design Specification, the damper or louver assembly shall be provided with appropriate accessory equipment to provide proper function and performance of the assembly.		
326	DA-4420	*Auxiliary Energy Source:* When required by the Design Specification, actuators shall be provided with an auxiliary energy source, such as springs, counterweights, or accumulators.		
327	DA-4430	*Modulating Actuator Requirements:* When required by the Design Specification, actuators for modulating service shall be provided with a pilot positioner or similar device to assure controlled positioning of the damper in response to the control signal.		

Requirement Number	Source	Requirement Text	Verification/Validation R - Review A - Analysis T - Test I - Inspection	Design Document Reference (Where is this requirement incorporated in the design)
328	DA-4440	*Position Indicators:* When required by the Design Specification, local position indicators shall be provided to enable surveillance and operability verification.		
329	DA-4450	*Environmental Design Requirements:* Electrical devices such as position indicating switches, limit switches, and all other electrical components, shall comply with the Applicable IEEE Standard(s) stated in the Design Specification. All other pneumatic, hydraulic, or other type of accessories shall be suitable for the environment specified in the Design Specification.		
330	DA-4460	*Piping of Pneumatic Actuators:* For pneumatic actuated dampers or louvers, the pneumatic piping system required for the operation of the assembly shall be arranged to provide a single field connection for each supply, or a control signal source for each assembly. Pneumatic piping system materials and installation shall conform to the requirements of the Design Specification. Pipe sizes shall be provided to assure operation within the specified operating time.		
331	DA-4470	*Electrical Wiring Requirements:* For electrically actuated dampers or louvers, interconnecting electrical wiring required for the operation of the actuators and accessories shall not be installed, unless specifically required by the Design Specification. When interconnecting electrical wiring is required by the design specification, the Design Specification shall specifically identify all interface materials and installation requirements for each assembly.		
	DA-5000	INSPECTION AND TESTING		
332	DA-5000	*General:* Inspection and testing of louvers and dampers shall be in accordance with the requirements of this article and of AA-5100, AA-5200, AA-5300, AA-5410, AA-5500, and AA-5600. The manufacturer shall be responsible for establishing the written visual examination procedures and necessary tolerances to assure that the products are built to the Manufacturer's drawings. Examination procedures shall include appropriate checklists to verify that the required observations were performed. Written reports of visual inspection shall contain, as a minimum, the requirements of AA-5200.		
333	DA-5100	*Testing:* The purpose of this Subarticle is to ensure the performance of the damper or louver prior to its installation. Acceptance shall be based on the performance requirements of DA-4140. The use of the test shall be at the discretion of the Engineer as related to the service requirements. Specific tests required by the Engineer shall be specified in the Design Specification.		
334	DA-5110	*Pressure Drop Testing:* Pressure drop data shall be based on tests performed in accordance with AMCA Standard 500. The AMCA Standard figure number used shall be stated with the pressure drop data.		
	DA-5120	CYCLE TIME AND CYCLE REPETITION		
335	DA-5121	*Required Cycles:* The damper or louver assembly, as applicable, shall be cycled a minimum of 10 times from the full open to the full closed position to verify the free operation of all parts and the correct adjustment, positioning, and seating of all blades.		
336	DA-5122	*Pneumatic Air Pressure:* The minimum specified air pressure shall be used for pneumatic operators during cycling.		
337	DA-5123	*Cycle Time:* The maximum time for operation of any of the cycles shall be compared with the allowable specified cycle time. If the specified time is exceeded, the necessary correction shall be made and the cycle test repeated.		
338	DA-5124	*Operational Requirements:* Determine that movement of the blades, actuators, and linkage shall be smooth and without hesitation, and limit switches operate in their intended position.		
339	DA-5130	*Frame Leakage Testing for Frame Leakage Classes A and B:* Pressure plates shall be bolted to the inlet and outlet side of the damper. The chamber created shall be pressurized to the specified frame design pressure with the blades partially open. Testing for Leakage Class A shall be in accordance with the bubble method of DA-5741, with the bubble solution applied to the frame. Testing for Leakage Class B shall use a calibrated flowmeter outlined in DA-5743. Leakage shall be equal to or less than the amount shown in Mandatory Appendix DA-I for the leakage class specified in the Design Specification.		
340	DA-5140	*Seat Leakage Testing:* Seat leakage testing shall be performed or verified after cycling time and cycle repetition testing and frame leakage testing. Leakage shall be equal to or less than that stated in Mandatory Appendix DA-I.		

Requirement Number	Source	Requirement Text	Verification/Validation R - Review A - Analysis T - Test I - Inspection	Design Document Reference (Where is this requirement incorporated in the design)
341	DA-5141	*Seat Leakage Test for Leakage Class 0 Dampers (Bubble Method):* The damper shall be bolted to a pressure chamber, which is then pressurized to the specified blade design pressure. A bubble solution (a commercial test solution or a solution consisting of equal parts liquid detergent, glycerine, and water) shall be applied to the damper seat area to be tested. A few moments later, but before the soap solution can dry, check the wetted areas and mark places where bubbles are being generated. Unless otherwise specified, a leak indication is any bubble 1/16 in. (1.58 mm) diameter that forms in 1 sec, or a bubble 9/32 in. (7.14 mm) that forms in 1 min.		
342	DA-5142	*Seat Leakage Test for Leakage Class II or III Dampers or Louvers:* Leakage data shall be based on tests performed in accordance with AMCA 500 or other approved methods.		
343	DA-5143	*Seat Leakage Test for Leakage Class I Dampers:* The damper shall be bolted to a pressure chamber, which is then pressurized to the specified blade design pressure using compressed air of instrument air quality. The inlet compressed air line shall have a calibrated flow meter having capability of resolving flow to within ±10% of allowable leakage in the line to measure all air passing through the damper.		
344	DA-5144	*Fire Damper Closure Test:* The fire dampers shall be tested in accordance with AMCA 500-83 using Fig. 5.4, 5.5, or 5.7 for wall or floor transfer applications; and Fig. 5.1, 5.2, or 5.3 for applications of the damper in ducts with dampers installed in their intended position. For closure under dynamic airflow conditions, the damper shall be tested at the specified volumetric flow rate when open and to the maximum operating pressure when closed.		
	DA-6000	FABRICATION AND INSTALLATION		
345	DA-6000	General: Article AA-6000 shall apply for fabrication, finishing, and installation, except that the design and seismic qualifications of the damper assembly are based on the damper assembly being adequately supported for the appropriate loads. The owner or his designee shall provide supports for the damper assembly to ensure that the damper is adequately supported as required by the Manufacturer's requirements and DA-4212. All of the welding codes or standards listed are allowed. Installation of UL fire dampers shall be in accordance with the Manufacturer's UL Installation Instructions.		
346	DA-6100	*Welding and Brazing:* Specific welding and brazing parameters shall conform to the requirements of AA-6000.		
	DA-7000	PACKAGING, SHIPPING, AND STORAGE		
347	DA-7000	*General:* Packaging, shipping, and storage of damper and louver assemblies shall be in accordance with the requirements of AA-7000. Implementation requires an ANSI/ASME NQA-2 classification level for packaging, shipping, receiving, storage, and handling of all items. Such classification is as follows: (a) dampers and louvers only — Level C (b) electric actuator — Level B (c) actuator, other than electric — Level C (d) accessories — Level B (e) dampers and louvers with electric actuators or accessories — Level B		
	DA-8000	QUALITY ASSURANCE		
348	DA-8000	*General:* Quality assurance of dampers and louvers shall be in accordance with the requirements of Section DA and AA-8000.		
349	DA-8100	*Damper and Louver Performance:* Documentation shall be established to verify that damper and louver performance complies with the testing criteria of DA-5000.		
350	DA-8300	*Quality Assurance Records:* Documentation shall be prepared, maintained, and submitted to the Owner for record in accordance with the requirements of DA-9000.		
	DA-9000	NAMEPLATES, STAMPINGS, AND MANUALS		
351	DA-9000	*General:* Article AA-9000 requirements for nameplates, stampings, and manuals shall apply, except that the nameplate shall require only the following information: (a) Manufacturer's name (b) equipment, tag, or mark number information as supplied by the purchaser (c) size		

Requirement Number	Source	Requirement Text	Verification/Validation R - Review A - Analysis T - Test I - Inspection	Design Document Reference (Where is this requirement incorporated in the design)
352	DA-9100	*Nameplates and Stampings:* In those instances when the damper or louver assembly consists of several frames which may be independently removable, each such frame shall bear required piece part markings. Actuators and accessories included in the assembly shall be marked with the name of the Manufacturer or a distinctive marking, which may be in code, by which it is identified as a product of a particular Manufacturer.		
353	DA-9200	*Manuals:* The Manufacturer shall provide a manual or manuals for the equipment furnished. The manual shall include a recommended spare parts list and recommended installation, maintenance, and operational procedures.		
	Mandatory Appendix DA-I	**FRAME LEAKAGE**		
354	Mandatory Appendix DA-I	*Maximum Permissible Seat Leakage Rate, SCFM, of Damper or Adjustable Louver Face Area at 1 in. w.g. Differential Pressure:* Damper Blade Length or Dia., in. / Leakage Class (0 Leakage) / Leakage Class I (Low Leakage) / Leakage Class II (Moderate Leakage) / Leakage Class III Normal Leakage) / Leakage (Class IV) Up to 12 / [Note (1)] / [Note (2)] / 15 / 60 / [Note (3)] Up to 24 / [Note (1)] / [Note (2)] / 10 / 40 / [Note (3)] Up to 36 / [Note (1)] / [Note (2)] / 8 / 32 / [Note (3)] Up to 48 / [Note (1)] / [Note (2)] / 8 / 32 / [Note (3)] Up to 60 / [Note (1)] / [Note (2)] / 6 / 27 / [Note (3)] Up to 72 / [Note (1)] / [Note (2)] / 5 / 25 / [Note (3)] GENERAL NOTES: a) Maximum frame leakage rate classes (at frame design pressure) are: Class A -- bubble tight, Class B -- 1 CFM total leakage; Class C -- no consideration.		
355	Mandatory Appendix DA-I	(b) The total maximum permissible leak rate is determined by multiplying the above quantities by the damper area (in sq. ft.) times the square root of the specified blade design pressure (in inches water gage). Notes: (1) Leakage shall be zero as determine by the bubble method damper leakage test of this Code. (2) Low Leakage is 1 SCFM/sq. ft. or 1 SCFM, whichever is the largest at the blade design pressure (in inches water gage). (3) Leakage Class IV is for applications where leakage is of no consideration		
	Mandatory Appendix DA-II	**DAMPER AND LOUVER CONFIGURATIONS**		

Requirement Number	Source	Requirement Text	Verification/Validation R - Review A - Analysis T - Test I - Inspection	Design Document Reference (Where is this requirement incorporated in the design)
356	Mandatory Appendix DA-II, FIG. DA-11-1000-1	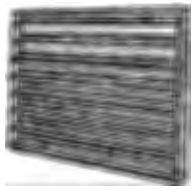 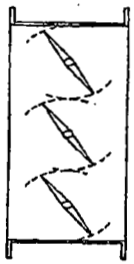 Centrally Pivoted Blades 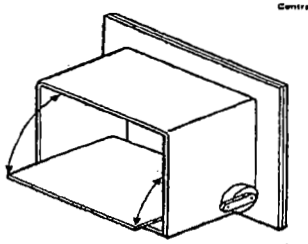 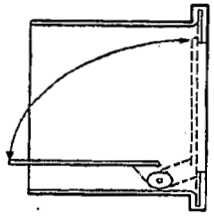 Edge Pivoted Blades Parallel Blade Damper		

Requirement Number	Source	Requirement Text	Verification/Validation R - Review A - Analysis T - Test I - Inspection	Design Document Reference (Where is this requirement incorporated in the design)
357	Mandatory Appendix DA-II, FIG. DA-II-1000-2	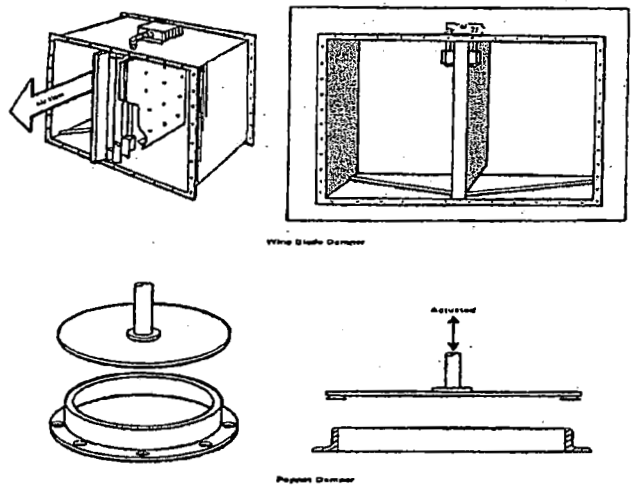		
358	Mandatory Appendix DA-II, FIG. DA-II-1000-3	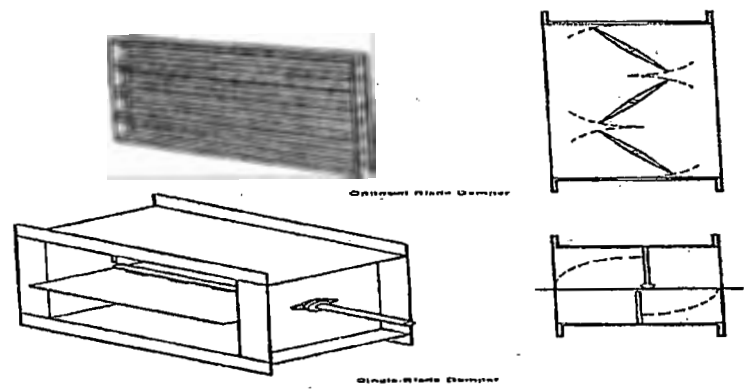		

Requirement Number	Source	Requirement Text	Verification/Validation R - Review A - Analysis T - Test I - Inspection	Design Document Reference (Where is this requirement incorporated in the design)
359	Mandatory Appendix DA-II, FIG. DA-11-1000-4	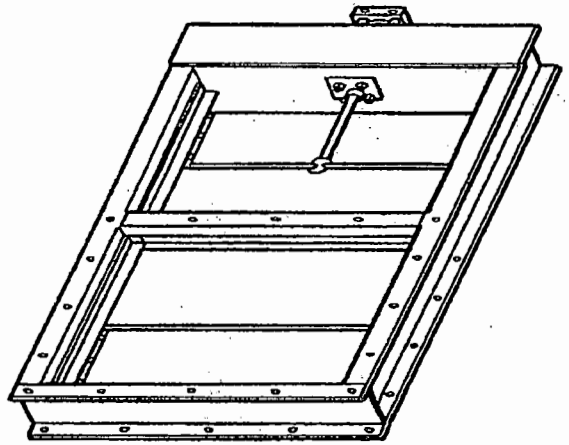 Slide Gate Guillotine Damper		
360	Mandatory Appendix DA-II, FIG. DA-11-1000-5	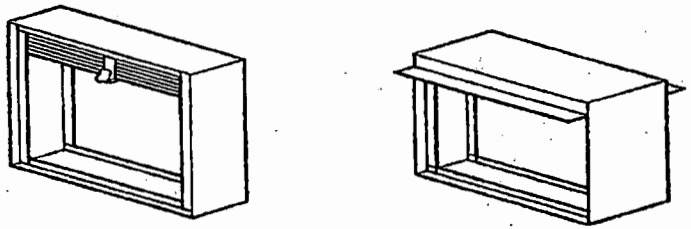 Curtain Type Damper 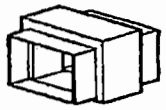 Style C 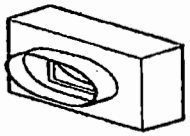 Style CO 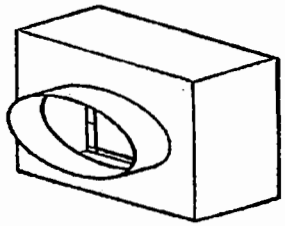 Style CR		

Requirement Number	Source	Requirement Text	Verification/Validation R - Review A - Analysis T - Test I - Inspection	Design Document Reference (Where is this requirement incorporated in the design)
361	Mandatory Appendix DA-II, FIG. DA-11-1000-6	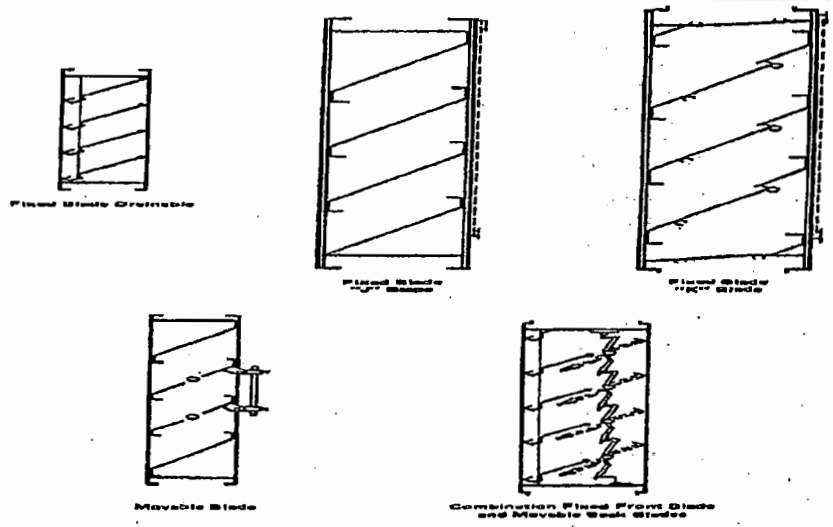		
	FG	SECTION FG: MOUNTING FRAMES FOR AIR CLEANING EQUIPMENT, NUCLEAR EQUIPMENT		
	FG-3000	MATERIALS		
362	FG-3100	*Allowable Materials:* Materials used in the construction of mounting frames shall conform to requirements of specifications for materials given in Table FG-3100 (Exhibit B).		
363	FG-3200	*Material limitations:* Tape, mastics, caulk, lubricants, and sealant materials are not allowed in the fabrication of mounting frames.		
	FG-4000	DESIGN		
364	FG-4100	*General Design:* The design and construction of mounting frames shall incorporate requirements for structural strength and rigidity, and sealing surface requirements to provide leak-tight individual positive clamping of HEPA filters and Type II adsorber cells to the mounting frames. Mounting frames shall be designed from structural welding to the housing wall, and for seal welding of adjoining members.		
	FG-4200	STRUCTURAL REQUIREMENTS		
365	FG-4210	*General:* Mounting frames shall be designed in accordance with the structural requirements given in Article AA-4000. Additional structural requirements and load definitions specific to Type II adsorber mounting frames appear in FD-4300.		
	FG-4220	LOAD DEFINITION		
366	FG-4220.1	Loads to be considered in the structural design of mounting frames are listed in paragraph AA-4211, with the following definitions: (a) Dead weight (DW): The weight of the mounting frame members. (b) External load (EL): 100 pounds (45 kg) for HEPA filters and 200 pounds (91 kg) for Type II adsorber cells. These loads are based on net weight of the HEPA filter and Type II adsorber cells. (c) Normal operating pressure differential (NOPD): for type II adsorber cells as defined in Table FC-5100, unless specified otherwise by the Owner in the Design Specification. The dirty filter pressure drop value shall be stated in the Design Specification, with input from the Manufacturer.		
367	FG-4220.2	System Operation Pressure Transient (SOPT) shall be provided in the Design Specification.		

Requirement Number	Source	Requirement Text	Verification/Validation R - Review A - Analysis T - Test I - Inspection	Design Document Reference (Where is this requirement incorporated in the design)
368	FG-4220.3	The seismic acceleration and response spectra (OBE and SEE) shall be provided in the Design Specification. Additional Dynamic Loads (ADL) and Design Pressure Differential (DPD) may also be provided in the Design Specification.		
369	FG-4240	*Load Combinations:* Unless stated otherwise in the Design Specification, the applicable loading conditions noted in Table AA-4212 for mounting frames are as follows: (a) Service Level A: DW + EL + NOPD + SOPT (b) Service Level B: DW + EL + NOPD + SOPT + OBE + ADL (c) Service Level C: DW + EL + NOPD + SOPT + SSE + ADL (d) Service Level D: not applicable		
370	FG-4240	*Acceptance Criteria:* The acceptance criteria are listed in Table AA-4321. The stress design value, S, shall be calculated as 0.6 S_y, where S_y is yield stress, as defined in Article AA-4000.		
371	FG-4300	*Structural Design Analysis:* The mounting frame shall be analyzed as a statically indeterminate lattice.		
372	FG-4310	*HEPA Mounting Frame Deflection Limits:* The mounting frame should deflect no more than 0.0007 in. (0.18 mm) per inch (25.4 mm) span under a load equivalent for the EL plus NOPD for HEPA filters. The uniform frame loading due to NOPD is determined from equation: $W = 0.036(1.5)\Delta pC$ (1) Where W = uniform frame loading, lb/in. 0.036 = conversion factor, in. wg to psi Δp = dirty filter pressure drop across bank, in. wg C = center-to-center spacing of filter bank, in. The value determined from equation (1) and EL is used in standard beam equations to determine the minimum moment of inertia required. Based on the minimum moment of inertia required for the member, the size and shape is determined by analysis or can be selected directly from the tables of structural shape properties given in the AISC Manual of steel Construction.		
373	FG-4320	*Type II Adsorber Cell Mounting Frame Deflection Limits:* The mounting frame shall deflect no more than 0.0007 in. per inch span under a load equivalent to the mounting weight when in a water flooded condition (empty cell weight plus double the dry carbon weight) plus 1.17 lb/in. (0.02 kg/mm) to account for NOPD. The load value is to be used in standard beam equations to determine the minimum moment of inertia required. Based on the minimum moment of inertia, the size and shape of the material can be determined by analysis or can be selected directly from the tables of structural shape properties given in the AISC Manual of steel Construction.		
374	FG-4330	*Impact Loading:* In addition to flexural strength, the mounting frame shall also be capable of withstanding a shock loading of at least 3 psi across the bank without exceeding the elastic limit of the frame material. The section moduli given in Part 1 of the AISC Manual of Steel Construction shall be compared with the minimum values obtained from the following equation. $M = 13 \cdot L^2 / S$ (2) where M = section modulus, $in.^3$ S = maximum allowable stress, psi L = length of member, in. The value obtained in Eq. (2) shall be less than that determined in the AISC Manual.		
	FG-5000	INSPECTION AND TESTING		
375	FG-5000	Inspection and testing of the HEPA filters and Type II adsorber mounting frames shall conform to the requirements in Article AA-5000.		
376	FG-5100	*Dimensional Inspection:* Overall dimensions shall be inspected to determine conformance to Manufacturer's drawing requirements. Length and spacing of members shall be inspected such that the openings are within tolerance. See Appendices FG-I and FG-II for details.		
377	FG-5200	*Alignment and Surface Finish:* The alignment of adjoining members shall be inspected, as will as the filter seating surface. Adherence to the following tolerances for HEPA filter and Type II adsorber cell mounting frames is required.		

Requirement Number	Source	Requirement Text	Verification/Validation R - Review A - Analysis T - Test I - Inspection	Design Document Reference (Where is this requirement incorporated in the design)
378	FG-5210	*Alignment:* (a) perpendicularity; mounting frame adjoining members are to be perpendicular, with a maximum offset of : 1/64 in. (0.4 mm) per foot of frame member, or 1/16 in. (1.6 mm) deviation over entire frame member length, whichever is greater. (b) Planarity of adjoining members: adjoining members are to be aligned not to exceed 1/64 in. (0.4 mm) at any point on the joint between the members.		
379	FG-5220	*Flatness:* Each HEPA filter or adsorber cell seating surface shall be plane within 1/16 in. (1.6 mm). The HEPA filter or adsorber cell seating surface is defined as a 1 ¼ in. (31.8 mm) perimeter around the HEPA filter or adsorber cell opening only. The entire mounting frame shall be plane with ½ in. (12.7 mm) total allowance in any 8 x 8 ft (203 x 203 mm) area. Waviness not exceeding ± 1/32 in. (0.8 mm) per 6 in. (152 mm) is permissible as long as the overall flatness is not compromised.		
380	FG-5240	*Surface Finish:* Filter seating surfaces – 125 micro in. (0.003) AA, maximum, in accordance with ANSI Standard B46.1. Pits, roll scratches, weld splatter, and other surface defects within the sealing areas shall be ground smooth. After welding, ground areas shall merge smoothly with the surrounding base metal.		
381	FG-5300	*Weld Inspection:* Seal and structural weld shall be inspected in accordance with Article AA-6300.		
382	FG-5400	*Coating Inspection:* Coating, when required, shall be inspected per Subarticle AA-6500.		
	FG-6000	FABRICATION		
383	FG-6100	*General:* The fabrication and assembly of the mounting frames shall be performed in accordance with approved design drawings.		
384	FG-6200	*Welding:* All welding procedures and welder qualifications shall be in accordance with the requirements of Subarticle AA-6300.		
385	FG-6300	*Clamping Devices:* Required bolt or stud size ½ - 13–UNC or ¾ - 11-UNC.		
386	FG-6400	*Cleaning:* All surfaces shall be cleaned per Article AA-6000 prior to acceptance. No halogen bearing materials or carbon steel tools shall be used to clean frames constructed of stainless steel. Cleaning shall be performed in accordance with Manufacturer's written procedure.		
387	FG-6500	*Coating:* Coating of the frames, if applicable, shall be in accordance with Subarticle AA-6500.		
	FG-7000	PACKAGING AND SHIPPING		
388	FG-7000	*General:* Packaging and shipping of mounting frames shall be in accordance with ANSI/ASME NQA-2 Level D Criteria if shipped by themselves. Mounting frames installed by the unit manufacturer in an air filtration unit shall be packaged and shipped in accordance with the Level assigned to the unit. See Article AA-7000 for general requirements.		
	FG-8000	QUALITY ASSURANCE		
389	FG-8000	*General:* The mounting frame manufacturer shall establish and comply with a quality assurance program which complies with Article AA-8000.		
	FG-9000	NAMEPLATES		
390	FG-9000	*General:* The following information, as a minimum, shall be permanently marked on an accessible on-sealing surface of the mounting frame; TYPE OF FRAME BY: (Manufacturer's name or symbol) FRAME SERIAL NUMBER: (or other identification) PURCHASE ORDER NUMBER: YEAR OF MANUFACTURE: This does not apply to frames installed as integral parts of air handling units or ducts. Any other stampings necessary shall be specified in the design specifications.		
	Mandatory Appendix FG-XI	HEPA FILTER MOUNTING FRAMES		

Requirement Number	Source	Requirement Text	Verification/Validation R - Review A - Analysis T - Test I - Inspection	Design Document Reference (Where is this requirement incorporated in the design)
391	FG-I-1100	*HEPA Filter Mounting Frame Dimensions:* A minimum frame width of 4 in. is required for major and cross members of face sealed HEPA filter frames. This allows a 1 in. wide filter sealing surface to compensate for any misalignment of the filter during installation, and allows a 2 in. space between filters horizontally and vertically, to give adequate room for clamping, handling, for use of power tools, or torque wrenches during filter change, and for manipulating a test probe between the units. The openings for HEPA filters shall be square within 1/16 in. and shall be 2 in. smaller than the filter size. Reference Section FC, Table FC-4110 for filter sizes.		
392	FG-I-1200	*HEPA Filter Clamping:* HEPA filters are to be clamped with at least four pressure points. Each cell is to be independently clamped. The clamping device shall be designed with a factor of safety of four (4) at the required gasket compression load. If the filters are gasketed, the clamping shall produce a uniformity of gasket compression of 65% + 15%.		
393	FG-I-1210	*Galling Prevention:* Threaded surfaces in the region of clamping device movement shall be lubricated with a chemically compatible lubricant to prevent galling, as specified in the Design Specification, or the clamping device nuts shall be of a dissimilar metal that is environmentally and structurally compatible with the threaded surface.		
394	FG-I-1300	*Filter Support:* Supports or cradles are required for HEPA filters to facilitate installations. The supports shall permit inspection of the filter-to-frame interface when the filter is installed.		
395	FG-I-1400	*Penetrations:* No penetration of HEPA filter mounting frames is allowed.		
	Mandatory Appendix FG-II	TYPE II ADSORBER CELL MOUNTING FRAMES		
396	FG-II-1000	*Mounting Frame Dimensions:* (a) Mounting frame dimensions for installing Type II adsorber cells shall be: openings – 6-3/8 x 24-1/8 in. (+1/8; -0) [162 x 614 mm (+1.7, -0)]. (b) Space between openings – vertical 4 in. (102 mm) min.		
397	FG-II-1100	*Clamping:* Type II adsorbers are to be clamped with at least four pressure points. Major requirements for filter clamping systems are magnitude and uniformity of clamping. Each cell is to be independently clamped. The clamping device shall be designed with a factor of safety of four (4) at the required gasket compression of 65% +15% of the original gasket thickness. Clamping shall be accomplished in the first 3 ½ in. of the right and left sides of the adsorber face plate and within 1 in. of the top and bottom edge of the face plate (to avoid interference with handles).		
398	FG-II-1110	*Galling Prevention:* Threaded surfaces in the region of clamping device movement shall be lubricated with a chemically compatible lubricant to prevent galling, as specified in the Design Specification, or the clamping device nuts shall be of a dissimilar metal that is environmentally and structurally compatible with the threaded surface.		
399	FG-II-1200	*Sealing:* Type II adsorber cells employing gaskets for sealing to the frame shall be by a method which will produce a gasket compression-deflection of at least 65% + 15% without exceeding a stress in the clamping device of 67% of its yield strength.		
400	FG-II-1300	*Adsorber Support:* A structure is required behind the Type II adsorber frame openings to support the weight of the cells. Structure minimum length is 30 in., and shall be built without backstops.		
401	FG-II-1400	*Penetrations:* Any penetration in the mounting frames shall be seal welded and isolatable.		
	GA	SECTION GA: PRESSURE VESSELS, PIPING, HEAT EXCHANGERS, AND VALVES		
402	Not Applicalbe	In the Course of Preparation		
	HA	SECTION HA: HOUSINGS		
	HA-3000	MATERIALS		
403	HA-3110	*Allowable Materials (General Requirements):* (a) Material used shall have properties and composition suitable for the application as defined by the Design Specification and the service conditions, as defined in AA-4213. Materials shall be in conformance with the ASME and the ASTM materials listed in Table HA-3110 (Exhibit C). Substitute materials shall be approved by the Owner or designee. (b) Materials that are part of the pressure boundary or equipment support shall meet the structural requirement of HA-4000. (c) Materials expressly prohibited or limited shall be explicitly described in the Design Specification.		

Requirement Number	Source	Requirement Text	Verification/Validation R - Review A - Analysis T - Test I - Inspection	Design Document Reference (Where is this requirement incorporated in the design)
404	HA-3111	*Protective Coatings:* All carbon steel surfaces shall be painted to protect against corrosion and to facilitate cleaning and decontamination. Coatings shall comply with the requirements of Section AA-6500 and ASTM D5144. Coatings shall meet radiation resistance, chemical resistance, and decontamination requirements in accordance with the Design Specification. Stainless steel (galvanized), bronze, copper, aluminum, and glass surfaces are not required to be coated.		
	HA-3200	SPECIAL LIMITATIONS ON MATERIALS		
	HA-3210	METALS		
405	HA-3211	*Physical Properties:* Changes in the physical properties of metals at minimum and maximum design temperatures must be recognized and factored into the design of housings.		
406	HA-3212	*Galvanic Corrosion:* The possibility of galvanic corrosion due to the relative potentials of aluminum, copper, and their alloys should be considered when used in conjunction with each other, or with steel or other metals and their alloys.		
407	HA-3213	*Corrosive Vapors:* Aluminum and zinc shall not be used in the presence of corrosive vapors unless protected by coatings designed to prevent deterioration of the metal. Protective measures other than coating shall be approved by the Owner or designee.		
408	HA-3214	*Nonmetallic Materials:* The use of nonmetallic materials such as plastics, elastomers, and similar substances is permitted in the construction of housings provided that in the selection of these materials, consideration is given to: (a) emission of toxic vapors; (b) degradation of properties caused by temperature extremes, radiation exposure, chemical exposure, and aging; and (c) maintainability.		
409	HA-3215	*Deterioration of Materials in Service:* It is the responsibility of the Owner or designee to identify the environment in which housings must operate so that the Manufacturer can select the grade of materials to meet the conditions stated in the Design Specification.		
410	HA-3300	*Certification of Material:* For structural and pressure boundary materials, the supplier shall make available certified test reports of chemical and physical properties. For those ASTM materials which do not have physical testing required by the ASTM specification, tensile testing shall be performed per ASTM A370. All other materials used in the construction of housings shall be provided with a manufacturer's Certificate of Compliance covering the ASME, ASTM, or other material specification, grade, and class, if applicable.		
	HA-4000	DESIGN		
411	HA-4100	*General Design:* Housings shall be designed in accordance with the requirements of AA-4000 and this Section. The design shall incorporate requirements for structural strength, rigidity, and sealing surfaces to provide leak-tightness of internal mounting frames to the housing. Decontamination requirements shall be specified by the Owner or designee in the Design Specification.		
	HA-4200	DESIGN CRITERIA		
	HA-4210	LOAD CRITERIA		
412	HA-4211	*Loads:* Loads to be considered in the structural design of housings are listed in AA-4211 with the following additions and clarifications.		
413	HA-4211	*Component load (CL):* The force of the internally mounted components imposed on the housing. CL is separated into four portions: dead weight, normal operating pressure differential (NOPD) for the particular component, OBE, and SSE. Additional dynamic loads (ADL) will be provided by the Design Specification, as applicable.		
414	HA-4211	Dead weight (DW): The weight of the housing members excluding the dead weight of internal equipment such as HEPA filters and their respective mounting frames. DW includes sheet metal panels, door panels, frame members, and stiffeners.		

Requirement Number	Source	Requirement Text	Verification/Validation R - Review A - Analysis T - Test I - Inspection	Design Document Reference (Where is this requirement incorporated in the design)
415	HA-4211	*Design pressure differential (DPD):* The dynamic pressure loads resulting from a design basis accident (DBA), intermediate break accident (IBA), or small break accident (SBA). Housings should be located outside the local pipe break affected area. If housings are subjected to these loads, the Design Specification (HA-4600) shall address the specific design requirements considering a Service Level D combination. For other component load criteria see the following Sections and/or other applicable Division II Code Sections: (1) Mounting frames – FG-4200 (2) Dampers – DA-4000 (3) Moisture separators – FA-4000 (4) Coils – CA-4000 (5) Ductwork – SA-4200		
416	HA-4211	*External load (EL):* As defined in AA-4211.		
417	HA-4211	*Fluid momentum load (FML):* As defined in AA-4211. Housing internal components shall be designed to withstand the FML resulting from air turbulence, from fan discharges into the housing. The housing portion where this load is significant is determined by the length required to regain uniform airflow as given by AMCA 201 Fig 3-3.		
418	HA-4211	*Hydrostatic load (HL):* Shall be added to the dead weight (DW) as applicable. Hydrostatic loads from accumulated condensate, water deluge systems, moisture separators, and associated housing flooding. The hydrostatic load shall be established by documented analysis based on housing internal configuration and component function.		
419	HA-4211	*Live load (L):* Includes a construction mainload of 250 lb on the roof of the housing. Housing sheet metal floors shall be designed for at least a 50 psf live load when no other floor system is provided (e.g., grating, concrete slab).		
420	HA-4211	*Normal operating pressure differential (component) ($NOPD_C$):* The opening pressure differential across the component from upstream to downstream of the component included in the housing. See applicable Division II component sections for all component NOPD's.		
421	HA-4211	*Normal operating pressure differential (housing) ($NOPD_h$):* The maximum pressure differential between inside the housing and external to the housings. For ease of design, a housing may be designed using one pressure value that envelopes SOPT and NOPD.		
422	HA-4211	*Seismic loads (SL):* Loads that are the result of the envelop of the operating basis earthquake (OBE) and the safe shutdown earthquake (SSE). As an option, the OBE, and SSE may be considered separately with the OBE loads used for the Level B load combination. Both orthogonal components of horizontal and vertical components of the seismic excitation shall be applied simultaneously in the direction that will produce worst-case stresses and deflections. These components may be combined by the square root of the sum of the squares (SRSS) method.		
423	HA-4211	*System operational pressure transient (SOPT):* As defined in AA-4211 or may be enveloped with NOPDh and NOPDC.		
424	HA-4211	*T and N:* Defined in AA-4211		
425	HA-4212	*Load Combinations:* The applicable loads are given in Table HA-4212.		
426	HA-4212	*Table HA-4212, Load Combinations:* Service Level — Load Combination A — N + T + L + CL + W B — Not required, see Level C C — N + T + L + CL + SL + ADL D — If DPD Applicable, N + DPD + SSE + ADL		
427	HA-4213	*Service Conditions:* The requirements of AA-4213 apply.		
428	HA-4214	*Design and Service Limits:* The requirements of AA-4214 apply.		

Requirement Number	Source	Requirement Text	Verification/Validation R - Review A - Analysis T - Test I - Inspection	Design Document Reference (Where is this requirement incorporated in the design)
429	HA-4215	*Housing Supports:* Housing supports shall be designed per the loads and load combinations in HA-4211 and HA-4212. The stress criteria for each load combination shall be per HA-4220. Floor mounted housing supports shall be designed to act as an integral base of the housing. Anchorage to the floor shall be designed to transfer the lateral forces without overturning or deformation of the housing unit. Units with internal mounting frames where leakage is a design consideration, shall have floor anchorages near the junction of the mounting frame and base. Small units which are typically provided with the base from the vendor's facility shall be designed for the installation/erection loads associated with a package unit. Larger units that are installed using modular construction need only consider the installation loads associated with each piece.		
430	HA-4220	*Stress Criteria:* The allowable stresses for housing sheet metal material and cold formed members shall be as defined in the AISI "Specification for the Design of Cold Formed Steel Structural Members." The allowable stresses for hot rolled shapes and plates shall be as defined in the AISC "Specification for the Design, Fabrication and Erection of Structural Steel for Buildings." The basic general membrane design stress for the Service Level A condition shall not exceed 0.6 F_y and shall be reduced as appropriate to consider lateral-torsional buckling of bending members and effective lengths of compression members. The basic general membrane design stress for the Level C condition shall not exceed 1.2 x 0.6 F_y per AA-4321. The combined membrane and bending design stress for Service Level A shall not exceed 1.5 x 0.6 F_y and shall be reduced as appropriate to consider lateral-torsional buckling of bending members and effective lengths of compression members. The combined membrane and bending design stress for the Level C condition shall not exceed 1.8 x 0.6 F_y per AA-4321.		
	HA-4230	DEFLECTION CRITERIA		
431	HA-4231	*Deflection Limits:* The deflection limits shall be specified in the Design Specification and shall be in accordance with AA-4231.		
432	HA-4232	*Deflection Limits for Mounting Frames and Equipment Interfaces:* For walk-in housings, the deflection limits for the mounting frames shall also be considered at the interface between the frame and the housing. For deflection limitations of other equipment (e.g., fans, dampers, ductwork) see the applicable Division II Code Sections.		
	HA-4240	OTHER CRITERIA		
433	HA-4241	*Vibration Isolation:* Vibration isolation requirements shall be specified by the Owner or designee in the Design Specification.		
434	HA-4242	*Provisions for Relative Movement:* Clearance shall be provided to allow for relative movement of the internal equipment during operation and during maintenance of the equipment.		
435	HA-4243	*Tolerances:* Tolerances shall be specified for all external and internal interface boundaries. Tolerances shall be specified in the design documents. Tolerances shall be accounted for in applicable design analysis (e.g., location of applied load).		
436	HA-4244	*Housing Attachments:* Housing attachment design shall include all Service Limits and Load Combinations set forth in HA-4212 and HA-4213, or as required by the Design Specification. Attachments shall be either the welded or bolted type.		
437	HA-4245	*Welded Attachments:* Consideration shall be given to local stresses induced in the housing wall by integral attachments as defined in AA-4243. Attachment and housing material shall be compatible for welding. See AA-6000. The permissible types of welded joints shall be in accordance with AWS D1.1, AWS D9.1, AWS D1.3, or ASME Section IX, as applicable.		
438	HA-4246	*Bolted Attachments:* Consideration shall be given to bolting and local stresses induced in the housing wall by integral attachments as defined in AA-4243. The design of bolts for structural supports shall meet the requirements of AISC Specification for the Design, Fabrication, and Erection of Structural Steel, Ninth Edition, Part 4.		
439	HA-4247	*Fatigue Considerations:* Internal housing components subjected FML should be designed for fatigue based on cyclic loading of the element. See HA-4211 to determine the portion of the affected internal housing components. The appropriate reductions in allowable stresses are given in Section 5, Appendix B of the AISC Specification for the Design, Fabrication, and Erection of Structural Steel, 9th Edition.		
440	HA-4248	*Fire Protection:* Fire protection requirements shall be specified by the Owner or designee commensurate with individual component requirements. Fire protection for Type III adsorbers shall be provided per FE-4620.		
	HA-4300	HOUSING JOINTS AND SEAMS		

Requirement Number	Source	Requirement Text	Verification/Validation R - Review A - Analysis T - Test I - Inspection	Design Document Reference (Where is this requirement incorporated in the design)
441	HA-4310	*General Requirements:* Selection of joints and seams used in the assembly of housing sections shall be based on the required structural integrity, leak-tightness, and the fluid flow within the system. Duct-housing interconnections shall be designed with consideration of the air distribution uniformity.		
	HA-4320	HOUSING JOINTS AND SEAMS		
442	HA-4321	*Acceptable Longitudinal Seams and Joints:* The following longitudinal seams and joints are acceptable for use in housing sections subject to limitations of HA-4330, -4340, -4500: (a) welded lap joint (b) welded butt joint (c) welded flange (d) fillet corner welds		
443	HA-4322	*Acceptable Transverse Joints:* The following longitudinal seams and joints are acceptable for use in housing sections subject to limitations of HA-4330, -4340, -4500: (a) welded lap joint (b) welded butt joint (c) welded flange (d) companion angle: gasketed & bolted		
444	HA-4323	*Other types of Connections:* Other types of rigid longitudinal and transverse connections may be acceptable provided that the design structural characteristics are qualified. Qualification shall be documented by engineering evaluation or test as specified by the Owner or designee. Qualification test shall demonstrate the joint's ability to withstand load combinations in HA-4212. Joint design qualification shall be completed prior to the start of fabrication.		
445	HA-4324	*Bolts and Fasteners:* Connections shall be designed to sustain all loading combinations. Bolted connection and joint design shall be designed to meet allowable leakage of HA-4500.		
	HA-4330	AIR CLEANING UNITS JOINTS AND SEAMS		
446	HA-4331	*Welds:* The pressure boundary joints and seams for all air cleaning unit housings shall be continuously welded.		
447	HA-4332	*Seals:* Penetrations on housings shall be sealed by welding, with a sealant qualified for the housing's environment, or with adjustable compression or gland-type seals. Gland-type seals include but are not limited to "O" rings, gaskets, and other nonmetallic materials.		
448	HA-4333	*Electrical Conduits and Drains:* All penetrations by electrical conduit and drains shall be arranged and individually sealed or valved so that bypassing of HEPA filter banks or adsorber banks cannot take place. Electrical conduit open to the inside shall be internally sealed to meet allowable leakage determined in HA-4500.		
449	HA-4334	*Separate Mounting Frames:* Where separate mounting frames for HEPA filters and adsorbers are required, they shall be continuously seal welded to the housing.		
450	HA-4340	*Air Conditioning and Air Handling Units Housing Joints and Seams:* These unit joints and Seams shall be of either welded or bolted construction or other types meeting the requirements of HA-4323 and the allowable leakage criteria specified in the Design Specification.		
451	HA-4341	*Penetrations:* Penetrations on housings shall be sealed by welding, adjustable compression, gland-type seals, or other method capable of meeting allowable leakage criteria for the housing as determined in HA-4500.		
	HA-4400	ACCESSORIES		
452	HA-4410	*Gaskets:* Gaskets shall be made of materials which are compatible with the conditions of HA-4600. Gasket dimensions shall be based on joint design. An Acceptable criterion for compression of gasket material shall be established on the basis of the gasket chosen. This acceptance criterion and the service life of the gasket and joint shall be documented by evaluation or testing as determined by the Owner or designee.		

Requirement Number	Source	Requirement Text	Verification/Validation R - Review A - Analysis T - Test I - Inspection	Design Document Reference (Where is this requirement incorporated in the design)
453	HA-4420	*Access Doors and Panels:* Construction of doors/panels and door frames shall be selected to meet the allowable leakage determined in HA-4500. Sealing surfaces between the door/panel and frame shall be designed for compression sealing. The design shall incorporate means for adjusting compression forces, gasket compression, and alignment. Spacing of hinges, latches, and bots shall be determined by calculation or test to ensure a uniform compression of the gasket. Spacing shall enable a compression light enough to assure leakage requirements are met (HA-4500) and provide a gasket compression uniformity of +/-20 deg. Hinged, if specified, shall be designed to minimize damage to compression seals due to friction and shear forces during opening and closing of the doors. Doors shall be designed for ease of operation by one person. Man entry housing doors shall be operable from both inside and outside the housing and be clearly labeled for open and closed latch position. Hinges and latches shall be designed such that lubrication materials shall not enter the interior of the housing. See Nonmandatory Appendix HA-B (HA-B-1110) for additional guidance on the design of access doors.		
	HA-4430	PROVISIONS FOR TESTING AND MAINTENANCE		
454	HA-4431	*Test Ports:* The Owner or designee shall evaluate the design function of the equipment to determine where test ports (including injection and sampling ports) are required. The penetration shall comply with HA-4332, and have a cap or plug that is suitable to meet the pressure requirements of the housing.		
455	HA-4432	*Manifolds:* The Owner or designee shall determine where injection and sampling manifolds are required. Injection and sampling manifolds shall be constructed of metal to minimize damage potential and to maintain manifold qualification. Sampling and injection manifolds which are required to be installed within the filter housing should be designed for permanent installation within the housing. If permanently installed manifolds cannot be provided, then manifolds shall be designed to be removable, with each manifold piece numbered, tagged, and marked for reinstalling prior to each test. Permanent manifold installation is recommended to obtain better repeatability of test results. When an air cleaning unit contains two or more HEPA filter banks or adsorber banks in series, or both, injection and sampling manifolds for the respective test agents are required for each of the filter and/or adsorber banks. Injection manifolds shall be qualified in accordance with HA-5800. Sampling manifolds shall be qualified in accordance with HA-5800.		
456	HA-4433	*Housing Access:* Walk-in housings shall be protected and braced to prevent damage by personnel entering for inspection and maintenance. Walk-in access doors (20 in. wide by 50 in. high, minimum) shall be provided on each side of each component section when housing size permits. A permanent platform shall be installed internal to the housing to provide access to filters for filter banks greater than or equal to six (6) ft. (approx. 1.8 m) in height. Platform shall not interfere with filter access or air flow distribution. Space shall be provided both internal and external to the housing for equipment removal and maintenance. See Nonmandatory Appendix HA-B for additional guidance.		
457	HA-4434	*Lighting:* Walk-in housings shall be fitted with vapor-tight lights between each bank of components. For walk-in air cleaning unit housings, fixtures shall be flush mounted and serviceable from outside of the housing. Lighting levels shall be determined based on personnel safety visual requirements as given in the Design Specification and guidance provided by IES Lighting Handbook as published by the Illuminating Engineering Society of North America.		
	HA-4440	MISCELLANEOUS		
458	HA-4441	*Drains:* Consideration shall be given to drains depending on requirements, services, or components within each compartment. For example, drains shall be required for: (a) fire protection systems (b) removal of decontamination liquids (c) moisture separators (d) condensing cooling coils Drains form an integral part of the housing pressure boundary and are subject to air leakage requirements established in HA 4500. The size selected for each drain furnished in the housing as well as the collection point for each drain shall be documented by calculation or test as determined by the Owner or designee. For additional guidance on the design of drains, see Nonmandatov Appendix HA-B (HA-B-1120).		

Requirement Number	Source	Requirement Text	Verification/Validation R - Review A - Analysis T - Test I - Inspection	Design Document Reference (Where is this requirement incorporated in the design)
459	HA-4442	*Insulation:* (a) Insulation shall be provided as specified by the Owner or designee to ensure air conditioning function, limit condensation, or provide acoustic noise reduction as required. (b) Acoustic linings and thermal insulation shall not be applied to the inside of housings that may become contaminated. (c) Insulation applied to the outside of housings shall not prevent access to doors, access panels, or other components requiring adjustment or maintenance. (d) The fire hazard classification of applied insulation, adhesive, and sealer shall not exceed a flame spread of 25 and smoke developed of 50 in accordance with NFPA-90A.		
460	HA-4443	*Clamping Mechanism:* Side access housings shall have a clamping mechanism, filter retrieval features, and filter indexing mechanisms. The clamping mechanism shall be individually adjustable for each HEPA filter or adsorber. For side access housings with fluid seals, the filter clamping mechanism shall be capable of moving the filter on and off through adequate travel to ensure the knife edge is embedded into the pliable sealant and provides seal for the complete perimeter of each filter or adsorber. The clamping mechanism shall provide for uniform gasket compression. The clamping mechanism for walk-in housings shall be designed per Section FG.		
	HA-4500	PRESSURE BOUNDARY LEAKAGE		
461	HA-4510	*General:* Pressure boundary leakage shall be controlled to ensure satisfactory environmental conditions, either within or outside of the nuclear facility. Allowable leakage for a housing, or portion of a housing, shall be determined considering the following factors: (a) control of airborne contamination (b) control of space pressure (c) control of space temperature (d) control of space humidity		
462	HA-4520	*Applicability:* Housing pressure boundary leakage shall apply to air cleaning, air conditioning, and air handling systems. Each housing's pressure boundary shall include the following items: (a) housing enclosure (b) access panels and doors (c) penetrations for instrumentation piping, electrical, and other utilities.		
	HA-4530	EVALUATION		
463	HA-4531	*Responsibility:* The Owner or designee shall establish the allowable leakage to assure ventilation, temperature, and contamination control functions are achieved.		
464	HA-4532	*Allowable Leakage Determination:* The following criteria shall be utilized in the determination of allowable leakage. (a) application of governing codes, regulations, and plant-specific requirements (b) consideration of each housing's operating mode, including anticipated system upset condition, such as rapid closure of dampers (c) normal and maximum operating pressures throughout the pressure boundary (d) system internal and external environmental conditions Guidance for determination of allowable leakage is given in Section SA, Nonmandatory Appendix SA-B.		
465	HA-4533	*Exceptions to Leakage Requirements:* Air cleaning, air conditioning, and air handling housings exhibiting one of the following conditions need not be subjected to quantitative measurement of leakage unless otherwise required by the Design Specification. (a) Housings in systems serving only the protected space and located only within the same protected space. (b) Housings under negative pressure which are located entirely in a clean interspace, and only provide air cooling or heating function. However, the housing shall be pressurized to locate and seal all audible leaks. Reference Section SA, Nonmandatory Appendix SA-B, Figs. SA-B-1410-1 through SA-B-1410-3 for typical system configurations.		

Requirement Number	Source	Requirement Text	Verification/Validation R - Review A - Analysis T - Test I - Inspection	Design Document Reference (Where is this requirement incorporated in the design)
466	HA-4534	*Documentation:* Derivation of allowable leakage for each housing, or portion thereof, shall be documented by the Owner or designee. This documentation shall include the following: (a) identification of housing or portion of housing (b) governing codes, regulations, and plant-specific requirements (c) purpose of leakage control; see HA-4510 (d) system mode of operation (e) normal and maximum operating pressure (f) method of derivation of allowable leakage (g) test pressures and associated allowable leakage		
467	HA-4600	*Design Specification:* The Owner Design Specification shall contain the following information which is relevant to the housing and housing supports covered by this Section. (a) Loads as defined by HA-4211. (b) Environmental conditions. (1) Housing external-design environmental conditions including, but not limited to pressure, temperature, relative humidity, radiation exposure, and hostile environmental factors for all plant conditions. (2) Housing internal-design environmental conditions for all system operating conditions (c) Service conditions as defined by AA-4213. (d) Design and service limits as defined by AA-4214. (e) Allowable housing leakage as defined by HA-4500. (f) System safety-related function: Identify the function of the housing for each plant condition. The function shall consist of purpose and operational parameters (i.e., flow, leakage, pressure, temperature). Plant conditions and service limits are defined by AA-4213 and 4214.		
468	HA-4600	*Design Specification:* (g) Fire protection requirements. (h) Material certification requirements. (i) Tolerance requirements. (j) Inlet and outlet configurations. (k) Housing components. (1) adsorbers (2) fans (3) filters (4) moisture separators (5) dampers (6) heaters (7) coils (8) insulation (9) access requirements (i.e. doors, access panels) (10) instrumentation and controls (11) spray-type conditioners		
	HA-5000	INSPECTION AND TESTING		
	HA-5100	GENERAL		
469	HA-5110	*Scope and Applicability:* This Section contains general requirements for the inspection and testing of housings and housing supports.		
470	HA-5120	*Responsibility for Procedures:* When an inspection or test is required herein, written inspection or testing procedures shall be developed, by the parties performing the test or inspection, to the specific requirements of this Section. The inspection or testing shall be performed by personnel qualified in accordance with ASNT SNT-TC-1A as amended by ASME NQA-1 and AA-6433.		
	HA-5200	INSPECTION		
471	HA-5210	*General Requirements:* Visual inspections shall be performed in accordance with AA-5200 and TA-3410. Inspection and testing of welds shall be performed in accordance with AA-5300 and AA-6000.		
472	HA-5220	*Housings:* Housings shall be inspected for proper dimensions including tolerances, as specified by HA-6400 and governing construction documents.		

Requirement Number	Source	Requirement Text	Verification/Validation R - Review A - Analysis T - Test I - Inspection	Design Document Reference (Where is this requirement incorporated in the design)
473	HA-5221	*Joints and Seams:* Joints and seams shall be visually inspected. Acceptance criteria shall be as follows. (a) Joints and seams shall comply with the requirements of HA-6400 and HA-6500. (b) Gasketed joints shall provide uniform gasket compression. Gaskets shall be installed per construction documents. (c) Longitudinal or transverse welded joints shall comply with AA-6000 requirements. (d) Threaded fasteners shall be provided with locking devices in accordance with AA-6258.		
474	HA-5222	*Stiffeners:* Stiffeners shall be visually inspected to ensure compliance with the following acceptance criteria. (a) Stiffeners shall comply with the fabrication and installation requirements of HA-6000. (b) Welds shall comply with AA-6000 requirements. (c) Threaded fasteners shall be provided with locking devices in accordance with AA-6258. (d) Removal of temporary attachments shall be verified.		
475	HA-5230	*Housing Supports:* Supports shall be visually inspected during installation, after installation, or both in accordance with the following acceptance criteria. (a) Supports shall comply with the fabrication and installation requirements of HA-6400. (b) Welded joints shall comply with AA-6000 requirements. (c) Threaded fasteners shall be provided with locking devices in accordance with AA-6258. (d) Removal of temporary attachments shall be verified.		
476	HA-5240	*Filter Mounting Frame to Housing Weld Inspection:* The housing filter mounting frame for HEPA filter and adsorbers shall be inspected using visual and nondestructive test methods per AA-6330.		
	HA-5300	PRESSURE BOUNDARY LEAKAGE TESTING		
477	HA-5310	*General:* Temporary isolation at a transverse joint shall be allowed subject to the following requirements. (a) Transverse joints not subjected to a quantitative leak test shall be companion angle type or other types which enable visual inspection of the sealing mechanism between mating housing sections. (b) Assembled joints utilizing gasketing shall be visually inspected to ensure uniformity of gasket compression. (c) The reduced allowable leakage (L_r) of housing sections shall be as follows: $L_r = L_s - R$ $R = (C_j / C_T)L_s$ where R = reduction in allowable leakage in cfm/sq. ft C_j = total perimeter of capped end joints of test section C_T = total perimeter of all joints in tested section, including capped end joints L_s = section allowable leakage		
478	HA-5320	*Allowances for Housing Leakage Rates by Sections:* Temporary isolation at a transverse joint shall be allowed subject to the following requirements.		
479	HA-5330	*Testing Procedures:* Prior to pressure boundary leakage testing, test procedures shall be developed in accordance with TA-3330. All test equipment shall be specified with the proper range and required accuracy. Test procedures shall include acceptance criteria determined by HA –4500, HA-5320, and HA-5350.		
480	HA-5340	*Documentation:* A test report shall be prepared to document the Pressure Boundary Leakage Test. This report shall include the following information. (a) housing or portion of housing tested (b) specified allowable leakage and test pressure (c) calculations for housing section square footage for housings tested by sections (d) adjustments to allowable leakage per HA-5310(c) (e) measured leakage test (f) list of pressure boundary components which were not installed during the pressure boundary leakage test (g) test equipment used; including model number, serial number, and evidence of calibration (h) names of test personnel (i) date of test		
	HA-5350	ACCEPTANCE CRITERIA		

Requirement Number	Source	Requirement Text	Verification/Validation R - Review A - Analysis T - Test I - Inspection	Design Document Reference (Where is this requirement incorporated in the design)
481	HA-5351	*Quantitative Leakage Tests:* Acceptance criteria for quantitative leakage tests shall comply with HA-4500 and HA-5320(c).		
482	HA-5352	*Nonquantitative Leakage Tests:* For non-quantitative leakage tests allowed by HA-4533, the acceptance criteria shall be that audible leaks have been sealed.		
483	HA-5400	*Mounting Frame to Housing Leakage Test:* A mounting frame pressure leak test may be used to detect leaks in the HEPA filter and adsorber mounting frames that could affect the results of the in-place leak test I TA-4300. The test, if used, shall be conducted in accordance with Nonmandatory Appendix TA-A.		
	HA-5500	STRUCTURAL CAPABILITY TESTS		
484	HA-5510	*Housing Pressure Test:* A pressure test shall be performed at the structural capability pressure per TA-3522. This test shall be maintained for the duration of the inspection. Upon completion of this pressure test, housings exhibiting permanent distortion or breach of integrity shall be repeated after repair or replacement until no permanent distortion or breach of integrity is observed.		
485	HA-5600	*Air Flow Distribution Tests:* When required by the Owner, air flow distribution qualification test for housings containing more than one HEPA filter or adsorber bank shall be made in the shop in accordance with Section TA-4600. This requirement shall be specified in the Owner's Specification. Acceptance criteria shall be in accordance with TA-4600. Housings containing HEPA filter(s), adsorbers, or both shall be field tested to demonstrate adequate air flow distribution in accordance with TA-4600. Tests shall be performed with components in the housing and the housing complete (i.e., assembled). Minor items such as temperature elements, pressure taps, etc., do not need to be installed as these components do not significantly influence air flow distribution. The Owner or designee shall specify a shop test in the Design Specification when housing inlet or outlet conditions could result in nonuniform flow distribution.		
486	HA-5700	*Air-Aerosol Mixing Uniformity Tests:* When required by the Owner or designee, air-aerosol qualification test for housings containing more than one HEPA/adsorber shall be made in the shop in accordance with TA-4600 for each manifold design. This requirement shall be specified in the Owner's Specification. Acceptance criteria shall be in accordance with TA-4600. Tests shall be performed with components in the housing and the housing complete (i.e., assembled). Minor items such as temperature elements, pressure taps, etc., do not need to be installed as these components do not significantly influence mixing. This design qualification test may be performed once and submitted to the Owner or designee for approval. This design qualification test may be performed once and submitted to the Owner or designee for approval. The design of the manifold and its location in the housing must be the same as qualified or a new aerosol mixing test is required.		
487	HA-5800	*Sample Manifold Testing:* Sampling manifolds shall be qualified to demonstrate that they collect a representable sample equivalent to a single point sample taken at a point at least ten duct diameters downstream of the filters. Refer to Nonmandatory Appendix D for performance test guidance. To ensure required leakage detection, acceptance criteria for sampling manifold shall be equal to or greater than the concentration detected with the single point sample.		
488	HA-5900	*Air Conditioning and Air Handling Unit Testing:* When required by the Owner or designee, integrated component functional acceptance testing shall be performed in the shop per TA-4000. This requirement shall be included in the Owner's Specification.		
	HA-6000	FABRICATION		
489	HA-6100	*General:* Air cleaning, air conditioning, and air handling unit housings and supports shall be fabricated in accordance with this Section and AA-6000.		
	HA-6120	MATERIALS		
490	HA-6121	*Material Selection:* Materials used in fabrication performed under this Section shall conform to HA-3000 requirements.		
491	HA-6122	*Material Identification:* Materials to be utilized in the fabrication and installation of components, parts, and appurtenances shall be identified on fabrication drawings and in the specification, as required in AA-6000.		
492	HA-6123	*Repair of Material with Defects:* Material with defects that are discovered or produced during the fabrication process may be used, provided the defects are repaired in accordance with the requirements of AA-8000, and for weld repairs, in accordance with AA-6300.		
493	HA-6130	*Control of Installation and Fabrication Process:* Quality control procedures shall be prepared and maintained current for all fabrication processes in accordance with AA-8000 requirements.		

Requirement Number	Source	Requirement Text	Verification/Validation R - Review A - Analysis T - Test I - Inspection	Design Document Reference (Where is this requirement incorporated in the design)
494	HA-6140	*Welding:* The welding of filter housings and supports shall comply with the requirements of AWS D1.1, AWS D1.3, AWS D9.1, or ASME Boiler and Pressure Vessel Code, Section IX. Welding and brazing performed in accordance with this Section shall meet the requirements of AA-6300 andAA-6400.		
	HA-6200	FABRICATION PROCESS		
	HA-6210	CUTTING, FORMING, BENDING, ALIGNING, AND FITTING		
495	HA-6211	*Uncoated Metal:* Uncoated metal may be cut, formed, or bent by any means that does not degrade the mechanical or chemical properties of the material.		
496	HA-6212	*Coated Metal:* Coated metal may be cut, formed, or bent as described in HA-6211. Coating damaged by scratches, gouge marks, or the removal of coating shall be repaired in accordance with AA-6540.		
497	HA-6213	*Inside Bend Radii:* Inside bend radii shall not be less than the values of the materiel grade given in the AISC Manual of Steel Construction, Allowable Stress Design.		
498	HA-6214	*Joining Parts:* Parts that are to be joined may be fitted, aligned, and retained in position during the joining operation by the use of bars, jacks, clamps, drift pins, tack welds, or other temporary attachment. The fitting and aligning process shall not damage the joined parts, or their surfaces, or enlarge bolted holes greater than the values shown in AISI, Specification for Design, Fabrication, Erection of Structural Steel for Buildings, Table 1.23.4.		
499	HA-6215	*Temporary Attachments:* Temporary welded attachments may be used in the fabrication process but shall be completely removed after use. Where such temporary attachments are used, they shall be subject to the following requirements. (a) Material shall be suitable for welding with no deduction in the structural integrity of the member to which the attachment is secured. (b) Attachment material shall be identified as required by HA-3000. (c) The welder and welding procedures shall be qualified in accordance with HA-6140.		
	HA-6300	MECHANICAL FASTENING		
	HA-6310	GENERAL		
500	HA-6311	*Nuts:* Nuts for all bolts and studs shall be engaged for the full length of the nut thread. Margin shall be allotted to prevent the nut from engaging the unthreaded portion of the bolt or stud.		
501	HA-6312	*High Strength Bolts:* High strength bolts, used in making bolted structural joints, shall be installed in accordance with the requirements of the "Specification for Structural Joints Using A325 or A490 Bolts," AISC Code.		
502	HA-6313	*Pins:* Pins for securing insulation should be secured to the metal surface by welding. Other attachment methods are acceptable, if allowed by the Design Specification. Justification of the attachment method used shall be supported by evaluation or calculation as determined by the Owner or designee, considering the requirements of the Design Specification.		
503	HA-6314	*Connecting:* Connecting flange faces shall be free of joint crevices at corners. These defects shall be eliminated by welding or grinding.		
	HA-6400	FABRICATION TOLERANCES		
504	HA-6410	*General:* Housing fabrication shall be accomplished within the tolerances detailed in the manufacturer's design drawings. These fabrication tolerances provide a method of quality control. For separately installed frames in walk-in housings, see Section FG.		
	HA-6420	SIDE ACCESS HOUSING AND GASKET SEAL SURFACES		
505	HA-6421	*Flatness:* Each HEPA filter/adsorber housing seating surface shall be plane within 1/16 in. (1.6 mm).		
506	HA-6422	*Surface Finish:* Pits, roll scratches, weld spatter, and other surface defects within the sealing areas shall be ground smooth. After welding, ground areas shall merge smoothly with the surrounding base metal.		
	HA-6430	SIDE ACCESS HOUSING FILTER FLUID SEAL SURFACES		
507	HA-6431	*Flatness:* The tolerance on each knife edge shall be plane within 1/8 in (3.2 mm).		

Requirement Number	Source	Requirement Text	Verification/Validation R - Review A - Analysis T - Test I - Inspection	Design Document Reference (Where is this requirement incorporated in the design)
508	HA-6500	*Cleaning:* All surfaces shall be cleaned per AA-6500 prior to acceptance. No halogen-bearing materials or carbon steel tools shall be used to clean housings or components constructed of stainless steel. Cleaning shall be performed in accordance with the Manufacturer's written procedures.		
	HA-7000	PACKAGING, SHIPPING, RECEIVING, STORAGE, AND HANDLING		
509	HA-7100	*General:* Packaging, shipping, receiving, storage, and handling requirements shall be in accordance with AA-7000 and this Section.		
	HA-7200	PACKAGING		
510	HA-7210	*General:* Air cleaning, air conditioning, and air handling unit housing packaging requirements are dependent upon the protection level as described in AA-7230. Additional clarification or exceptions are provided below.		
511	HA-7211	*Protection:* Air cleaning, air conditioning, and air handling unit housings shall be protected to prevent physical damage. All openings shall be covered with wood, metal, or plastic. Waterproofing is required to exclude moisture from interior spaces and external devices. Mating surfaces shall be identified and specifically protected from damage. Protection equal to Level "D" is required for the basic unit. Protection for housing components must be equal to that required by the level of protection specified in the applicable Code section.		
512	HA-7300	*Shipping:* This Subarticle relates to transportation methods from the manufacturer or supplier, to the job site. Shipping shall comply with the provisions of AA-7100, AA-7200, and AA-7300.		
513	HA-7400	*Receiving:* Receiving at the job site or intermediate location, where additional work is to be performed or for long term storage, shall be accomplished in accordance with the provisions of AA-7000. It shall be the requirement. at any receiving point, to have adequate descriptions of items to permit suitable inspection for conformance, damage acknowledgment, and proper documentation.		
	HA-7500	STORAGE		
514	HA-7510	*General:* Housing storage requirements are dependent upon the protection level described by AA-7230. Protection equal to Level "D" is required for the basic unit. Protection for housing components must be equal to that required by the level of protection specified in the applicable Code section. These levels shall be the required storage requirements along with the requirements of HA-7511 and HA-7512.		
515	HA-7511	*Drains and Vents:* All housing drains or vents shall be sealed or closed as specified by the Owner or designee. Provisions may be made to use certain drains or vents for assurance that water or other objectionable material does not accumulate within the housing.		
516	HA-7512	*Other Components:* Components covered by other Sections of this Code, that are installed into and integral assembly which is covered by this Section, shall be stored in accordance with AA-7230.		
	HA-8000	QUALITY ASSURANCE		
517	HA-8100	*General:* Equipment and material covered under this Section shall be manufactured, fabricated, installed, inspected, and tested in accordance with the provisions of a Quality Assurance Program meeting AA-8000 requirements.		
518	HA-8200	*Material Identification:* Measures shall be established for controlling and identifying material throughout the manufacturing process and during shipment in accordance with AA-8000.		
519	HA-8300	*Drawings and Documentation:* The Design Specification shall list the documentation requirements for the housing and list when this documentation is to be provided by the manufacturer, supplied to the Owner or designee. Housing-related items shall include, but not be limited to the following: (a) material certification and test reports; (b) housing drawings including: (1) outline drawings (2) piping and instrumentation diagrams (3) wiring diagrams (c) material list (d) welding procedures and procedure qualification records as required by applicable welding codes listed in HA-6140 (e) reports for tests an inspections required by HA-5000 (f) seismic and environmental qualification reports (g) operating, installation, and maintenance manuals		

Requirement Number	Source	Requirement Text	Verification/Validation R - Review A - Analysis T - Test I - Inspection	Design Document Reference (Where is this requirement incorporated in the design)
	HA-9000	NAMEPLATES AND STAMPING		
520	HA-9100	*General:* All items manufactured under the requirements of this Section shall be identified to assure compliance with AA-9000 requirements. Records, as necessary to assure compliance with AA-8200, shall be maintained by the responsible organization in accordance with the approved quality assurance program.		
521	HA-9110	*Stamping/Marking:* Stamping/marking, as used herein, provides a means of maintaining identification of finished products for the purpose of retaining traceability of material.		
522	HA-9111	*Housings:* Housings shall be provided with nameplates, in accordance with AA-9120, which relate the housings to the applicable design and fabrication documents. Housings fabricated in multiple sections need only one nameplate. Each section shall have identification markings, observable after completed installation, which relate all sections. Nameplates shall be visible after completed installation.		
523	HA-9112	*Housing Accessories:* Housing accessories shall be marked, stamped, or provided with a nameplate which shall relate to the design and fabrication drawings. Identification shall be observable after completed installation.		
	IA	SECTION IA: INSTRUMENTATION AND CONTROLS		
	IA-3000	MATERIALS		
524	IA-3100	*Materials of Construction:* All materials used shall have properties and composition suitable for the application as defined by the Design Specification and the operating environmental conditions as defined in Subsubarticle IA-4120. Materials shall be in conformance with the latest revision of the ASME and ASTM materials listed in Table IA-3100 (Exhibit D). Substitute materials shall be equivalent to or exceed the requirements in Table IA-3100 (Exhibit D). Materials that are part of the pressure boundary or support equipment shall meet the structural requirements of Article AA-4000.		
525	IA-3200	*Nonpermissable Materials:* Use of the following materials is prohibited in the manufacture and installation of instrumentation and controls in nuclear air and gas treatment systems: (a) mercury (b) radiologically unstable fluorinated polymers (c) asbestos		
526	IA-3300	*Restricted Materials:* All material shall be compatible with the operating environment. The following material shall not be used unless approved by the Owner or his designee: (a) Aluminum and zinc in the presence of corrosive vapors (b) Adjoining materials which may cause galvanic corrosion. (c) Chlorine producing materials, e.g. Polyvinylchloride (PVC).		
527	IA-3400	*Certification of Material:* The Manufacturer shall make available a Certificate of Conformance for panel structural material and tubing to the ASTM numbers listed in Exhibit D. For those materials which do not have ASTM ratings, testing should be performed per ASTM A370. All other components used in the construction of the panel assembly shall be provided with a Manufacturer's Certificate of Compliance to the requirements in the Design Specification.		
	IA-4000	DESIGN REQUIREMENTS		
528	IA-4120	*Design Specification:* The Design Specification shall establish the purpose (design function) of the instrumentation and control components. The Design Specification shall also identify the instrumentation and control component safety classifications. For guidance in determining instrumentation and controls for nuclear air and gas treatment systems refer to Nonmandatory Appendix IA-C. The Design Specification shall provide requirements for the design, fabrication, and selection of instrumentation and control systems in accordance with this Code and shall include, as applicable: (a) Performance requirements for all plant operating modes (accident and normal) wherein the equipment is expected to perform an intended function.		

Requirement Number	Source	Requirement Text	Verification/Validation R - Review A - Analysis T - Test I - Inspection	Design Document Reference (Where is this requirement incorporated in the design)
529	IA-4120	*Design Specification:* (b) Ambient and process operating conditions including the measured variable for each of the applicable operating modes described in Subsubarticle IA-4120(a). (1) temperature: the minimum and maximum temperatures to which the instrumentation and control system devices will be subjected. (2) pressure: the minimum and maximum pressures to which the instrumentation and control system devices will be subjected. (3) relative Humidity: the minimum and maximum relative humidities to which the instrumentation and control system devices will be subjected. (4) radiation – alpha, beta, and gamma: the cumulative dosage levels and maximum dose rates to which the equipment will be subjected.		
530	IA-4120	*Design Specification:* (5) chemicals: concentration and duration of chemical exposure to which the equipment will be subjected. (6) electrical: all electrical power transients to which the instrumentation and control system devices may be subjected. Variations in parameters such as voltage, frequency, and current shall include minimum and maximum values and their duration. (7) structural: structural loads to which the instrumentation and control system components will be subjected. The loads shall include as a minimum the applicable loads listed in para. AA-4211.		
531	IA-4130	*Manufacturer's Documentation Requirements:* When required by the Design Specification, documentation provided by the Manufacturer to the Owner or his designee shall include the following, as applicable: (a) mounting connection details (b) weight and center of gravity (c) service connections, size, type, and locations (d) materials of construction (e) design life (f) environmental and seismic qualifications (g) mounting restrictions and instructions (h) loop and logic diagrams (i) electric schematic and wiring drawings (j) panel general arrangement and construction drawings (k) instrument piping and tubing drawings (l) Certificate of Conformance (m) calibration procedures and data (n) panel mounted instrument list including nameplate engraving (o) maintenance and surveillance requirements		
532	IA-4140	*Clarification of Code Applicability:* Pressure retaining part whose design, materials, manufacture, test, and documentation are covered by ASME Section III shall be in accordance with the applicable requirements of that Code. When conflict exists between this Section and ASME Section III, the latter shall take precedence.		
533	IA-4200	*Single Failure Criteria:* Where redundant safety channels are required by the Design Specification, they shall meet the single failure requirements of ANSI/IEEE 379.		
	IA-4300	SEPARATION CRITERIA		
	IA-4310	CIRCUITS AND DEVICES		
534	IA-4311	Physical separation of nuclear safety-related circuits and devices shall be in accordance with IEEE Standards 384.		
535	IA-4312	Instrument Cables, including but not limited to computer, transducer, thermocouple, resistance temperature detector, or other low level signal cables shall be installed in separate raceways from power-carrying cables.		
	IA-4320	INSTRUMENT SENSING LINES		
536	IA-4321	Instrument sensing lines and interconnecting tubing for redundant safety channels shall be routed a minimum of 18 in. (450 mm) apart from each other, in areas free of or protected from missiles, high-energy jet streams, and pipe whips.		
537	IA-4322	Where 18 in. (450 mm) of separation cannot be maintained each line shall be separated by a barrier extending at least 1 in. (25 mm) beyond the line of sight between redundant sensing lines. The design and installation of separation barrier shall be in accordance with the requirements of Article AA-4000.		
538	IA-4323	Tubing shall not rest against surfaces that can cause wear or mechanical damage.		
539	IA-4324	Sensing lines shall be routed to ensure that the intended function is not jeopardized due to high vibration, abnormal temperature or stresses due to thermal expansion.		

Requirement Number	Source	Requirement Text	Verification/Validation R - Review A - Analysis T - Test I - Inspection	Design Document Reference (Where is this requirement incorporated in the design)
540	IA-4325	Divisional separation of permanently filled capillaries, sensing lines and interconnecting tubing for nuclear safety-related devices shall be identified by color coding and tagging, as a minimum, at both ends.		
541	IA-4326	Redundant tubing inside panels shall be separated by a minimum of 1 in (25.4 mm).		
542	IA-4400	*Qualification of Equipment:* All components shall be operable when exposed to the range of operating conditions specified during normal and accident conditions. Manufacturer installation and maintenance requirements that are needed to maintain qualification of the equipment shall be identified by the Manufacturer and followed in the qualification program.		
543	IA-4410	*Normal Operating Conditions:* All components shall be specified, manufactured, and qualified to ensure operation within performance limits (e.g., accuracy) when exposed to their normal operating conditions. Normal operating conditions include but are not limited to exposure to the following: temperature, pressure, humidity, vibration, chemicals, power levels and fluctuations, radiation.		
544	IA-4420	*Environmental Qualification:* Safety related components operating in a harsh environment (as defined in 10CFR50.49) shall be qualified in accordance with IEEE Standard 323.		
545	IA-4430	*Seismic Qualification:* Safety related components and mounting shall be seismically qualified using the guidelines of IEEE Standard 344 to the Owner's required response spectra, plus applicable amplification factors, for the components location and mounting. Components that do not perform a safety-related function but must retain their structural integrity so as not to damage, degrade or interfere with the performance of safety functions by any safety related equipment or components shall maintain their structural integrity when subjected to applicable seismic loads.		
546	IA-4440	*Qualification Documentation:* The Owner shall have documentation demonstrating the qualification of components and showing the Owner's acceptance of the qualification testing and results.		
	IA-4500	PANELS		
	IA-4510	GENERAL		
547	IA-4511	Control panels shall be designed to support and protect the nuclear safety-related instrumentation and controls and to facilitate the monitoring and control of the mechanical equipment operation and performance.		
548	IA-4512	Instrumentation and control devices on the front and the inside of control panels shall be arranged in accordance with the requirements of ISA-RP60.3.		
549	IA-4513	Temperature limits inside a control panel shall be maintained within the allowable specified design temperature range for all components mounted inside the panel.		
	IA-4520	STRUCTURE AND ENCLOSURE MATERIALS		
550	IA-4521	Material for enclosures, stiffeners, braces, supports and frames shall be selected to meet the structural design requirements of Article AA-4000.		
551	IA-4522	Support shall be provided for incoming cables, wiring, piping, and other appurtenances.		
552	IA-4523	Subpanels and brackets for mounting instruments shall meet the structural loads and load combinations set forth by the Design Specification.		
553	IA-4524	Panels weighing over 200 lb (91 kg) shall be provided with removable lifting eyes or other means as required for loading, unloading, and moving the panels to their final installation location.		
554	IA-4525	All tubing, wire troughs or raceways used in the panel shall be of the metallic type or shall be manufactured from fire retardant or self-extinguishing material. Nonmetallic components and devices shall be manufactured from self-extinguishing materials, as classified by ASTM Standard D635, Standard Method of Test for Flammability of Self-Supportive Plastics.		
555	IA-4526	Panels shall be provided with an integral mounting plate or a separate structural channel member, as required by the Design Specification, to facilitate the mounting of panels on embedment plates or anchor bolts provided in walls or floors.		
	IA-4530	PANEL WIRING		
556	IA-4531	Wiring bundles shall be supported by such devices as clamps, straps, wire ties, wirewrap, etc. Uninsulated metallic/wire ties shall not be used.		
557	IA-4532	Insulating grommets shall be installed through all openings provided in partitions for the passage of wires or cables.		
558	IA-4533	Where a cable crosses a panel hinge, multi-stranded flexible wire shall be used. The cable shall also be secured on each side of the hinge, protected from damage.		
559	IA-4534	Both ends of each wire shall be marked with color-coded wire markers as required by the Design Specification.		
560	IA-4535	All wiring shall have current capacity, mechanical strength, thermal rating, and insulation characteristics to meet the circuit and installation requirements required by the Design Specification and NFPA 70, para. 384-9. The wire insulation and Class 1E cables shall meet the requirements of ANSI/IEEE 383.		

Requirement Number	Source	Requirement Text	Verification/Validation R - Review A - Analysis T - Test I - Inspection	Design Document Reference (Where is this requirement incorporated in the design)
561	IA-4536	Terminal blocks shall be installed on subpanels for terminating cables entering and leaving the panels, except that wire leads from thermocouples and certain other temperature-detecting devices may be brought directly to the terminal blocks in the instrument cases.		
562	IA-4537	Terminal blocks shall be provided with a marking strip, and terminals shall be clearly identified.		
563	IA-4538	The terminal blocks used for the termination of power voltage circuits, the control voltage circuits, and signal circuits (low voltage or current) shall be physically separate from each other.		
564	IA-4539	The control panel and its appurtenant equipment shall be connected to a ground bus inside the panel for personal safety. The method of grounding shall not compromise the independence of the redundant safety-related instruments and shall be in accordance with IEEE 1050. A method of terminating to the Owner's station ground bus shall be provided.		
	IA-4540	POWER SUPPLY AND FUSES		
565	IA-4541	Power supplies within control panels shall be provided with branch circuit overload protection and a means to disconnect incoming power.		
566	IA-4542	Fuses shall be installed in locations free from obstructions.		
567	IA-4543	Fuses shall be sized to limit fault currents within the requirements of the cable insulation.		
	IA-4550	PANEL PIPING, TUBING, VALVES, AND FITTINGS		
568	IA-4551	Process sensing lines, fittings and valves installed within panels shall meet the requirements of Subarticle IA-4600.		
569	IA-4552	All non-process piping, tubing, or valves installed inside panels shall be in accordance with ANSI B31.1 unless otherwise required by the Design Specification.		
570	IA-4553	Tubing bends shall be smooth and formed to avoid flattened, kinked, or wrinkled bends.		
571	IA-4554	Panel piping or tubing installation shall not interfere with panel mounted instrument removal or access to the instrument for maintenance purposes.		
572	IA-4555	Isolation valves and test connections shall be installed in an easily accessible location to allow in-place calibration of all instrumentation.		
573	IA-4556	Isolation valves shall not be solely supported by the instrument tubing. Isolation valve supports shall be secured to the panel structure or substructure to prevent torque being applied to the tubing.		
574	IA-4557	Bulkhead fittings shall be used for termination of the control tubing from inside and outside of the panel.		
575	IA-4558	Instrument lines shall have permanent tags on both ends where required to assure proper identification. The type of material, color coding, and method of tagging shall be as required by the Design Specification.		
	IA-4560	INSTRUMENT AIR SUPPLY HEADER ASSEMBLY		
576	IA-4561	Where required, pressure reducing valves, complete with isolation valves, relief valves, and gauges, shall be installed inside the panel to provide a regulated instrument air supply to an instrument air header.		
577	IA-4562	The instrument air header shall be provided with isolation valves for each branch supply line.		
578	IA-4570	Permanent nameplates shall be installed on control panels to designate instrument function and tag number. Nameplates shall be in accordance with ISA-RP60.6 or the Owner's requirements.		
579	IA-4600	*Mounted Instruments and Sensors:* Instruments shall not be mounted in locations where their performance will be adversely affected by equipment vibration. Instrument chassis and attached capillary tubing shall be supported to meet the seismic requirements for their particular location.		
580	IA-4700	*Interconnecting Wiring for Skid Mounted Components:* Interconnecting circuits between components mounted on a skid shall meet the requirements of the National Electric Code, Sections 250-59 and 250-95, and paras. IA-4534 and IA-4535.		
	IA-4800	INSTRUMENT SENSING LINES AND FIELD-INSTALLED TUBING		
	IA-4810	PRESSURE BOUNDARY AND MECHANICAL DESIGN REQUIREMENTS		
581	IA-4811	Instrument piping, tubing, isolation valves, and permanently filled capillaries in systems designed to ASME Section III shall be designed and constructed to the requirements of ISA Standard S67.02 as supplemented below: (a) Instrument sensing lines that are connected to Class 2 process piping or vessels shall not be less than Class 2 Seismic Category I from their connections to the process piping or vessel to and including the accessible isolation valve. (b) Instrument sensing lines that are connected to Class 2 processing piping or vessels and that are used to actuate or monitor safety related systems shall not be less than Class 2 Seismic Category I from their connections to the process piping or vessel to the sensing instrumentation. (c) Instrument sensing lines that are connected to Class 3 processing piping or vessels and that are used to actuate or monitor safety related systems shall not be less than Class 3 Seismic Category I from their connections to the process piping or vessel to the sensing instrumentation.		
582	IA-4812	Instrument sensing lines not connected to ASME Section III Class 2 or 3 piping, vessels or ductwork shall meet the requirements of ANSI B31.1.		
583	IA-4813	Fitting material shall be compatible with the tube or pipe material to avoid galvanic corrosion and provide acceptable soldering or brazing joints.		

Requirement Number	Source	Requirement Text	Verification/Validation R - Review A - Analysis T - Test I - Inspection	Design Document Reference (Where is this requirement incorporated in the design)
584	IA-4820	*Tube Pitch and Condensate Trap:* Where the potential for condensation or oil migration exists, condensate or oil traps with valved drain legs shall be provided at the low points of the tubing.		
	IA-4830	SUPPORT SYSTEM		
585	IA-4831	Sensing lines and tubing shall be installed in a continuous support system such as metal trays wherever practical. Sensing lines and tubing shall be run along walls, columns and ceilings to avoid damage by pipe whip, missiles, Jet forces or falling objects.		
586	IA-4832	The support system for instrument sensing or interconnecting lines shall be taken into account in the tray or duct hanger loading requirements.		
587	IA-4833	Supports for nuclear safety-related sensing lines shall be designed using the requirements of Article AA-4000.		
588	IA-4834	Loads such as thermal expansion and weight of insulation shall be evaluated in accordance with para. AA-4212 for instrument tubing.		
	IA-4830	ROOT VALVES AND ISOLATION VALVES		
589	IA-4841	Root valves shall be located in the vicinity of the point of connection to the process pipe or duct.		
590	IA-4842	Isolation valves and test connections shall be installed in a location to allow in-place calibration of instrumentation.		
	IA-4900	INSTRUMENT SETPOINTS		
591	IA-4910	The Owner shall establish setpoints for nuclear safety-related air and gas treatment systems with allowance for loop inaccuracy and have provision for margin to assure that systems perform within their design limits.		
592	IA-4920	Safety-related setpoints and loop error determinations shall be determined using the methodology of ISA Standard S67.04.		
	IA-5000	INSPECTION AND TESTING		
593	IA-5100	Inspection and testing of instrumentation and control components shall be in accordance with IEEE 336. In addition, the requirements of Article AA-5000 supplemented by the following shall apply.		
	IA-5110	PROCEDURE FOR INSPECTION AND TESTING		
594	IA-5111	Written procedures with acceptance criteria for visual examination, inspection and functional testing shall be developed in accordance with Subarticle AA-5120 and Article TA-3000 for instrumentation and control components.		
595	IA-5112	The procedures shall be reviewed and approved by the Owner or designee.		
596	IA-5120	*Test Reports:* After inspection and testing is completed a written test report shall be prepared by personnel performing the test in accordance with Subsubarticle AA-5250.		
597	IA-5200	*Visual Inspection:* Visual inspection shall be performed in accordance with a written checklist per Subsubarticle AA-5240.		
598	IA-5220	*Methods of Visual Examination:* Visual examination shall be performed by either method of direct visual or remote visual examination in accordance with Subsubarticle AA-5220.		
599	IA-5230	*Written Procedures:* Visual examination shall be performed in accordance with approved written procedures.		
600	IA-5300	*Calibration and Testing:* Manufacturer's calibration and test instrumentation shall be in accordance with Article TA-3000 and traceable to NIST.		
601	IA-5311	All instruments and devices shall be calibrated and tested in accordance with the procedures developed for para. IA-5111.		
602	IA-5312	Wiring for control power shall be subjected to a Megger test at the panel assembly facility. Megger or other high voltage test shall not be applied to instrumentation or shielded cables.		
603	IA-5313	An electrical continuity test shall be performed to demonstrate the correctness of the wiring termination of all panel mounted instruments. Functional tests shall be performed in accordance with written test procedures approved by the Owner or designee.		
604	IA-5321	All local mounted instruments and devices shall be calibrated and tested in accordance with the Manufacturer's calibration and test procedures and the procedures developed for para. IA-5111.		
605	IA-5331	Pressure testing of pneumatic control circuits shall be performed in accordance with ISA Standard RP7.1.		
606	IA-5332	Pressure testing of sensing lines shall be performed in accordance with ANSI/ASME B31.1 or ASME Section III as applicable.		
	IA-6000	PANEL FABRICATION AND ASSEMBLY		
607	IA-6100	*General Requirements:* In addition to the requirements of Article A-6000, the following requirements shall apply.		
	IA-6110	MATERIALS		
608	IA-6111.1	*Material Selection:* Materials to be used in the fabrication of control panels, instruments, devices, components, parts, sensing lines; and support systems, anchors and bolts shall conform to the requirements of Article IA-3000.		

Requirement Number	Source	Requirement Text	Verification/Validation R - Review A - Analysis T - Test I - Inspection	Design Document Reference (Where is this requirement incorporated in the design)
609	IA-6111.2	*Material Selection:* Thickness of plate material for the enclosure skin, stiffeners braces, and frame shall be selected to meet the structural loadings and applicable seismic requirements of Article IA-4000 and the Design Specification.		
610	IA-6112	Repair of materials and surfaces with defects shall be performed in accordance with para. AA-6123.		
	IA-6200	FABRICATION PROCESS		
611	IA-6210	Cutting, forming, and bending shall be in accordance with Subsubarticle AA-6210.		
612	IA-6211	Thermal cutting shall be in accordance with para. AA-6212		
613	IA-6212.1	*Panel Fabrication by Welding:* When the control panel enclosure is fabricated by welding more than one piece of sheet steel, the welding joint shall be made in accordance with the requirements of Subarticle AA-6300. Warping or distortion from cutting, punching or welding operations shall not extend beyond the outer edge of the panel mounted device.		
614	IA-6212.2	*Panel Fabrication by Welding:* The control panel shall be all welded sheet steel or plate construction. Reinforcing shall be provided so that the deflection due to the added weight of the instruments will not exceed 0.125 in. (3.2 mm) for any 4 ft (1219 mm) of panel surface.		
615	IA-6220	*Fittings and Aligning:* Fitting and aligning shall be in accordance with Subsubarticle AA-6230.		
616	IA-6230	*Mechanical Joints:* Mechanical joints shall be in accordance with Subsubarticle AA-6230.		
617	IA-6300	*Welding:* Welding shall be in accordance with Subarticle AA-6300.		
618	IA-6400	*Brazing:* Brazing shall be in accordance with Subarticle AA-6400.		
619	IA-6500	*Cleaning and Coating:* Cleaning and coating shall be in accordance with Subarticle AA-6500.		
620	IA-6600	*Installation Requirements – Handling and Rigging:* Handling and rigging shall be in accordance with Subsubarticle AA-6610.		
621	IA-6700	*Material Identification:* Materials of construction of the control panel shall be as specified by the Owner or designee. A Certificate of Conformance shall be supplied as required by the Design Specification and Subarticle IA-3400.		
	IA-7000	PACKAGING, SHIPPING, RECEIVING, STORAGE, AND HANDLING		
622	IA-7100	*General Requirements:* Packaging, shipping, receiving, storage, and handling of all control panels, instrumentation, and accessories shall be in accordance with Article AA-7000 and ANSI/ASME NQA-2, Part 2.2. Any control panel made of items requiring different levels of handling shall be classified to the highest level designated for any of the respective items.		
623	IA-7200	*Packaging:* All control panels and sensitive instrumentation (if packaged separately) shall meet the requirements of packaging level B in accordance with ANSI/ASME NQA-2, Part 2.2 paras. 2.2.2 and 3.2.2. When bulk accessories are packaged separately (i.e., valves, sensing lines, instrument cables) the packaging shall meet the requirements of packaging level C in accordance with ANSI/ASME NQA-2, Part 2.2 paras. 2.2.3 and 3.2.3. Identification and marking on the outside of all packages shall be maintained and weather-proofed.		
624	IA-7300	*Shipping:* The mode of transportation used shall be consistent with the protection classification of the item and with the packaging method employed.		
625	IA-7410	*Inspection (Receiving):* Preliminary visual inspection shall be performed prior to or immediately after unloading to determine if any damage occurred during shipping. Unless the packaging marking prohibits unpacking, the contents of all shipments shall be visually inspected to verify that the specified packaging and shipping requirements have been maintained. The inspection shall be performed in an area equivalent to the level of storage requirement for the item (see Subarticle IA-7500).		
626	IA-7420	*Disposition:* Packages shall be controlled in accordance with ASME NQA-1.		

Requirement Number	Source	Requirement Text	Verification/Validation R - Review A - Analysis T - Test I - Inspection	Design Document Reference (Where is this requirement incorporated in the design)
627	IA-7500	*Storage:* Control panels and sensitive instruments shall be stored indoors. This area shall have paved floor or equal and shall not be subject to flooding. The area shall be well ventilated and shall be provided with uniform temperature control to prevent condensation and corrosion. Original packaging is recommended if item is to be stored for a long period of time. Miscellaneous accessories such as valves, sensing lines, and instrument cables shall be stored as described above, except that temperature control is not required. All items shall be plainly marked so that they are easily identified, and shall be stored in a manner as to permit ready access for inspection, maintenance, or retrieval without excessive handling to minimize risk of damage.		
	IA-8000	QUALITY ASSURANCE REQUIREMENTS		
628	IA-8100	*General:* Quality assurance for instrumentation and controls shall be in accordance with the requirements of Article AA-8000 and the requirements below.		
629	IA-8210	*Test Reports and Data:* The following test reports and data supporting the design and installation of instrumentation and control devices used in nuclear facilities air and gas treatment systems shall be maintained in records: (1) All records and procedures that are required to be maintained by ANSI B31.1 for the portion of installation designed to ANSI B31.1 and ASME Section III for the portions of installation designed to ANSI B31.1 and ASME Section III. (2) Documentation as identified in Subsubarticles IA-4130 and IA-4440.		
630	IA-8211	All records and procedures that are required to be maintained by ANSI B3 1.1 for the portion of installation designed to ANSI B31.1 and ASME Section III for the portions of installation designed to ANSI B31.1 and ASME Section III.		
631	IA-8212	Documentation as identified in IA-4130 and IA-4440.		
	IA-9000	NAMEPLATES		
632	IA-9100	*General:* Permanent types of nameplates shall be designed, manufactured, and installed in accordance with the requirements of Article AA-9000 and the requirements below.		
633	IA-9200	*Requirements:* Each instrument and control device shall be provided with a permanent type of Manufacturer's nameplate.		
	IA-9300	NAMEPLATE SPECIFICATIONS		
634	IA-9310	*Material:* Nameplates supplied and installed by the manufacturer shall be made from noncorrosive material.		
635	IA-9320	*Size:* Nameplates shall be sized to accommodate all pertinent information.		
636	IA-9330	*Information:* The following information shall be stamped or engraved on each nameplate in lieu of requirements of Subsubarticle AA-9120: (a) Manufacturer; (b) model or catalog number; (c) serial number; (d) range.		
	SA	SECTION SA: DUCTWORK		
	SA-3000	MATERIALS		
637	SA-3100	*General:* For components of ductwork and ductwork supports, the supplier shall make available, (as a minimum) certified test reports of chemical and physical properties. For those ASTM materials, which do not have physical testing required by the ASTM specification, tensile testing shall be performed per ASTM A370. All other components used in the construction of ductwork shall be provided with a manufacturer's Certificate of Compliance covering the ASME, ASTM, or other material specification, grade, and class, if applicable.		
638	SA-3200	*Material Substitution:* Measures shall be established for controlling and identifying material substitutions throughout the manufacturing and installation process.		
639	SA-3300	*Material Testing:* When required by the Design Specification, material shall be tested in accordance with the applicable material specification. Supplemental material testing, when required, shall be performed in accordance with Article AA-3000.		

Requirement Number	Source	Requirement Text	Verification/Validation R - Review A - Analysis T - Test I - Inspection	Design Document Reference (Where is this requirement incorporated in the design)
640	SA-3400	*Material Specifications:* Material for ductwork and ductwork supports shall be capable of meeting all requirements of Article SA-4000. Materials shall be in conformance with the ASTM materials listed in Table SA-3400 (Exhibit E). Substitute materials shall be equivalent, or exceed the requirements of Table SA-3400 (Exhibit E), as determined by the Engineer. Materials selected shall be evaluated for suitability with service conditions and compatibility with other materials used in duct construction. The ASTM numbers in Table SA-3400 (Exhibit E) designate a chemical composition and a material thickness limit. A grade designation is usually required to determine the minimum strength of the material. If the specific grade material has an assigned minimum yield and tensile strength, these values shall be used for design purposes. If values have not been established and assigned, then tests in accordance with the procedures outlined in Article AA-3000 shall be performed to ensure that the strength of the material meets the required design stress values.		
641	SA-3400	*Material Specifications:* Material listed in Exhibit E under "Carbon Steel Plates and Sheets" when coated in accordance with "Zinc Coatings" shall be allowable under "Galvanized Steel Plates and Sheets." Materials listed under "Carbon Steel Structural Members" and "Carbon Steel Bolts and Nuts" shall be coated in accordance with Zinc Coatings" when used in conjunction with materials listed under "Galvanized Steel Plates and Sheets."		
	SA-4000	DESIGN		
642	SA-4100	*General:* Ductwork and ductwork supports shall be designed in accordance with the requirements of Article AA-4000 and this Section.		
	SA-4200	DESIGN CRITERIA		
	SA-4210	LOAD CRITERIA		
643	SA-4211	*Ductwork Loads:* Additional dynamic loads (ADL), dead weight (DW), design pressure differential (DPD), design wind (W), external loads (EL), normal operating differential pressure (NOPD), and system operational pressure transient (SOPT) as defined in AA-4211		
644	SA-4211	*Constraints of free end displacement load (T):* These are loads caused by thermal movement. When duct construction utilizes gasketed companion angle construction, effects of T for normal operations may be ignored. For postulated accident conditions, a review of the effect of T is necessary.		
645	SA-4211	*Fluid momentum load (FML):* This is as defined in AA-4211 with the following clarification: Ductwork shall be designed to withstand the FML resulting from air turbulence, often found in sections following fan discharges, and certain dampers and duct fittings. The termination of such sections is marked by the length of straight ductwork required to regain uniform airflow as given by AMCA 201 Fig 20: $D_f = VD / 1000$ or $(VD_e)/(3281)$ for round and equivalent rectangular ducts where V = velocity, ft/min (m/sec) D = duct diameter, ft (m) Df = length of straight ductwork connected to fan or component discharge ft (m) The equivalent diameter (D_e) for rectangular duct, with side dimensions of a and b, is given by: $D_e = 1.30[(ab)^{0.625}/(a+b)^{0.25}]$		
646	SA-4211	*Live load (L):* Live loads shall be defined in the Design Specification (Subarticle SA-4600). The live load shall not be less than a construction manload of 250 pounds (113.4 kg). The load shall be applied at the mid-span of the duct, or midpoint of a stiffener, or within a panel. When applied to a panel, the load shall be assumed to be distributed over 10 square inches (64.5 cm^2).		
647	SA-4211	*Normal Operating Pressure Differential (NOPD):* This is defined in para. AA-4211 with the following clarification: For ease of design, a duct system may be designed using one pressure value that envelopes NOPD and SOPT (para. AA-4211). NOPD and SOPT may be positive or negative pressures. Worse case shall be considered in the design.		
648	SA-4211	*Seismic loads (SL):* Loads that are the result of the envelope of the operating basis earthquake (OBE) and the safe shutdown earthquake (SSE). As overall system functionalism is not generally compromised by loads from the OBE, the SSE will govern the design. As an option, the OBE, and SSE may be considered separately with the OBE loads used for the Level B load combination. The horizontal and vertical components of the seismic excitation shall be applied simultaneously in the direction that will produce worst-case stresses and deflections. These components may be combined by the square root of the sum of the squares (SRSS) method.		
649	SA-4211	*Hydrostatic loads from accumulated condensate, water deluge systems, or moisture separators:* The hydrostatic load shall be conservatively established by documented analysis base on ductwork configuration, accessories, and component function. Hydrostatic load (HY) shall be added to the dead weight (DW) as applicable.		

Requirement Number	Source	Requirement Text	Verification/Validation R - Review A - Analysis T - Test I - Inspection	Design Document Reference (Where is this requirement incorporated in the design)
650	SA-4211	*Design Pressure Differential (DPD):* The dynamic pressure loads resulting from a design basis accident (DBA), intermediate break accident (IBA), or small break accident (SBA). Generally, HVAC should be routed outside the local pipe break affected area. If HVAC is subjected to these loads, the Design Specification (Subarticle SA-4600) shall address the station specific design requirements considering a Service Level D combination.		
651	SA-4211	For component load criteria see the following sections: (1) HEPA filters: FC-4300 (2) Mounting frames: FG-4200 (3) Fans: Article BA-4000 (4) Dampers: Article DA-4000 (5) Refrigeration equipment: Article RA-4000 (6) Conditioning: Article CA-4000 (7) Moisture separators: Article FA-4000 (8) Prefilters: Article FB-4000 (9) Instrumentation: Article IA-4000		
652	SA-4212	*Ductwork Load Combinations:* The applicable component loading shall be combined in accordance with Table SA-4212.		
653	SA-4212	*Table SA-4212, Load Combinations:* Service Level — Load Combination A — DW + NOPD + FML + EL + L + T + W B — Not required C — DW + NOPD + FML + EL + SL + ADL + W D — Not required unless DPD is applicable		
654	SA-4213	*Service Conditions:* The requirements of para. AA-4213 apply.		
655	SA-4214	*Design and Service Limits:* The requirements of para. AA-4214 apply.		
656	SA-4215	*Ductwork Support Loads:* Loads per SA-4211 for L, NOPD, SL DW, EL, and ADL shall also be used for duct supports. The definition of loads per para. AA-4211 for dead weight (DW), external loads (EL) and additional dynamic loads (ADL) shall also be used for duct supports. Hydrostatic loads shall be treated as DW load when the loads have an effect on the supports. Hydrostatic loads as defined in paragraph SA-4211 (g) shall be treated as a DW load when the loads have an effect on the supports. The fluid momentum load as defined in paragraph SA-4211 (c) is not typically a significant load for supports and may be neglected.		
657	SA-4216	*Ductwork Support Load Combinations:* The applicable support shall be combined in accordance with Table SA-4216.		
658	SA-4216	*Table SA-4216, Load Combinations:* Service Level — Load Combination A — DW + NOPD + EL + L + T B — Not required C — DW + NOPD + EL + SL + ADL D — Not required unless DPD is applicable		
659	SA-4220	*Stress Criteria:* The ductwork stress shall be based upon the AISI "Specifications for the Design of Cold Formed Steel Structural Members." The ductwork support stress shall be based upon the AISC "Specification for the Design, Fabrication and Erection of Structural Steel for Buildings."		
660	SA-4220	*Stress Criteria:* The basic general membrane design stress for the Service Level A condition shall not exceed 0.6 F_y and shall be reduced as appropriate to consider lateral-torsional buckling of bending members and effective lengths of compression members. The basic general membrane design stress for the Service Level C condition shall not exceed 1.2 X 0.6 F_y per AA-4321.		
661	SA-4220	*Stress Criteria:* The combined membrane and bending design stress for Service Level C shall not exceed 0.9 F_y and shall be reduced as appropriate to consider lateral-torsional buckling of bending members and effective lengths of compression members. The combined and bending design stress for Service Level A shall not exceed 1.8 X 0.6 F_y per AA-4321.		
	SA-4230	DEFLECTION CRITERIA		

Requirement Number	Source	Requirement Text	Verification/Validation R - Review A - Analysis T - Test I - Inspection	Design Document Reference (Where is this requirement incorporated in the design)
662	SA-4231	*Deflection Limits:* The maximum deflection (dmax), may be sustained so that the duct function is not impaired shall be determined by analysis, test or both. The allowable deflections are as defined in para. AA-4231 for various service level conditions.		
663	SA-4232	*Deflection Limits for Panels, Flanges, and Stiffeners:* The maximum deflection (d), which occurs as the result of the applicable load combinations of para. SA-4212 is the lesser of two values derived from the following:		
664	SA-4232	*Criterion No. 1 – Deflection shall not exceed the following criteria :* (a) Plate or sheet: 1/8 in. per ft. of the maximum unsupported panel span in direction of airflow but not more than ¾ in. (b) Stiffeners and flange connections: Not to exceed 1/8 in. per foot of span but not more than ¾ in. (c) Flange connection to components: 1/360th of the span but not to exceed 1/8 in.		
665	SA-4232	*Criterion No. 2 – Deflections shall be limited to assure that the following will not occur:* (a) Distortion of air flow path cross-section in excess of tolerances specified on SA-6400. (b) Damage to safety related items such as instrumentation or accessories. (c) Impingement of deflected elements on adjacent services, such as equipment, pipe, cables, tubing, etc. (d) Loss of leak tightness in excess of leakage limit. See SA-4500. (e) Functional failure of components attached to the duct (e.g., instrument lines).		
666	SA-4233	*Deflection Limits for Mounting Frames and Equipment Interfaces:* (a) See subsubarticle FG-4310 for mounting frame deflection limits. (b) See applicable equipment section for other deflection limits.		
	SA-4240	OTHER CRITERIA		
667	SA-4241	*Vibration Isolation:* The vibration isolation type and efficiencies, primarily between duct and equipment, shall be as designated in the Design Specification. The vibration isolation equipment shall be designed with restraints to resist the loads generated under any Service Condition.		
668	SA-4242	*Provisions for Relative Movement:* Clearances shall be provided to allow for the relative motion between equipment, ductwork, and supports. When clearances or travel ranges or both are required to accommodate movements of ductwork or supports, design margins shall be introduced to allow for variations due to fabrication and installation. Design clearances and travel ranges shall be based on the maximum range that might occur between two operating conditions and not necessarily the maximum cold to hot range. All parts of support shall be disengaged by the movements of ductwork.		
669	SA-4243	*Tolerances:* Installation and fabrication tolerances for duct-work shall be accounted for in the design of the ductwork and supports. Fabrication tolerances shall comply with subarticle SA-6400.		
670	SA-4244	*Permanent Attachments:* The attachment design shall include all Service Conditions and Load combinations set forth in SA-4212 and SA-4213, or as required by the Design Specification. The permissible types of welded joints shall be in accordance with AWS D1.1. or AWS D1.3, as applicable. Attachments may be either the welded or bolted type and shall be considered as follows:		
671	SA-4244	*Welded Attachments:* Consideration shall be given to local stresses induced in the ductwork by integral attachments as defined in para. AA-4243. For items used as part of an assembly for the support or guiding of ductwork, the materials shall be compatible for welding, see Article AA-6000.		
672	SA-4244	*Bolted Attachments:* Consideration shall be given to the mechanical connection and local stresses induced in the ductwork by nonintegral attachments as defined in paragraph AA-4243. The design of bolts for structural supports shall meet the requirements of Subarticle AA-4360.		
	SA-4300	DUCTWORK JOINTS AND SEAMS		
673	SA-4310	*General:* Selection of joints and seams used in the assembly of ductwork sections shall be based on the required structural integrity, leak-tightness, and the fluid flow within the system. Duct-housing interconnections shall be designed with consideration of the air distribution uniformity.		
	SA-4320	DUCT JOINTS AND SEAMS		

Requirement Number	Source	Requirement Text	Verification/Validation R - Review A - Analysis T - Test I - Inspection	Design Document Reference (Where is this requirement incorporated in the design)
674	SA-4321	The following longitudinal seams are acceptable for use in ductwork sections subject to the limitations of para. SA-4324. (a) groove weld (b) lock type (c) Pittsburgh lock (d) Fillet weld		
675	SA-4322	The following longitudinal types of transverse joints are acceptable for use in ductwork sections: (a) welded flange (b) companion angle (c) Vanstone flange (d) Welded coupling		
676	SA-4323	Other types of rigid transverse connections may be acceptable provided that the structural characteristics are documented by engineering evaluation and tested per Subarticle SA-5400		
	SA-4324	LIMITATIONS OF DUCTWORK JOINTS AND SEAMS		
677	SA-4324	*Limitations of Ductwork Joints and Seams:* Longitudinal seams and transverse joints whose structural integrity is dependent on the folded or punched metal, shall be pressure tested. Test pressure shall be the structural capability pressure. Longitudinal seams using sealants or elastomers to meet the leakage requirements shall be qualified by test, analysis, or test and analysis to assure meeting the design criteria of subarticle SA-4600. Brazed welding may be used for sealing purposes.		
678	SA-4325	*Bolts and Fasteners:* Requirements for bolted connections of duct-to-duct and duct-to-housing, with a design pressure differential less than 15 in. w.g. (3735 Pa) shall be as follows: (a) Maximum bolt spacing shall be four inches on center unless otherwise specified by the Design Specification. The adequacy of bolt spacing greater than four inches on center, for pressure boundary integrity, shall be documented by calculation or testing. (b) Minimum bolt diameter shall be three-eighths (3/8) inches (9.52 mm) unless otherwise specified by the Design Specification. The adequacy of bolt diameters less than three-eighths shall be documented by calculations or testing.		
679	SA-4325	*Bolts and Fasteners:* Requirements for bolted connections for duct with design pressure differentials exceeding 15 in. w.g. shall be determined by calculations or testing. Nonbolted, nonwelded type fastening devices (e.g., screws, rivets, etc.) shall have their adequacy demonstrated for the load combinations of SA-4212 and documented by calculation or testing. Bolted connections shall be verified as being capable of sustaining all loading combinations by using an appropriate stress intensification factor.		
	SA-4400	COMPONENTS		
680	SA-4410	*Flexible Connections:* (a) Flexible connections shall be designed to meet the requirements for design given by para. SA-4212, Subarticle SA-4500, and NFPA 90A. Allowable leakage (fabric leakage and joint leakage) shall be determined in accordance with Subarticle SA-4500. (b) Flexible connections shall be rated by pressure and qualified life. The qualified life shall be determined by testing, or calculation, or both and be based on the environmental conditions provided by the Design Specification. Minimum physical properties (i.e., tensile strength), subject to degradation due to the environments required to satisfy design, shall be the basis of qualified life.		
681	SA-4410	*Flexible Connections:* (c) Flexible connection pressure rating shall be determined by an ultimate strength test. The pressure rating of the connection shall be no greater than 50% of burst pressure. Calculation of burst pressure can be done in lieu of the test. Burst pressure shall exceed structural capability pressure. (d) If adhesive is used in fabrication or installation of flexible connections, it shall be environmentally qualified for use in expected environmental conditions.		
682	SA-4420	*Gaskets:* Gaskets shall be made of materials which are compatible with the Service Conditions (see Subarticle SA-4600). Gasket material dimensions shall be based on joint design. An acceptable criterion for compression of gasket material shall be established on the basis of the gasket chosen. This acceptance criterion and the service life of the gasket material shall be documented by an engineering evaluation or testing.		

Requirement Number	Source	Requirement Text	Verification/Validation R - Review A - Analysis T - Test I - Inspection	Design Document Reference (Where is this requirement incorporated in the design)
683	SA-4430	*Access Doors and Panels:* Construction of doors/panels and door frames shall be selected to meet the allowable leakage determined in Subarticle SA-4500. Sealing surfaces between the door/panel frame shall be designed for compression sealing. The design shall incorporate means for adjusting compression forces, gasket compression, and alignment. Spacing of hinges, latches, and bolts shall be determined by calculation or test to ensure a uniform compression of the gasket. Spacing shall enable a compression of at least 50% of nominal gasket thickness and provide a gasket compression uniformity of +/- 20%. Door hinges shall be designed to minimize damage to compression seals due to friction and shear forces during opening and closing of the doors. Dogs, hinges, latches, etc. shall be designed such that lubrication materials shall not enter the interior of the ductwork. See Nonmandatory Appendix SA-C (SA-C-1210) for additional guidance on the design of access doors.		
	SA-4440	PROVISIONS FOR TESTING AND MAINTENANCE		
684	SA-4441	*Test Ports:* The engineer shall evaluate the design function of the equipment to determine where test ports (including injection and sampling ports) are required.		
	SA-4450	MISCELLANEOUS		
685	SA-4451	*Drains:* (a) Consideration shall be given to drains depending on requirements, services, or components within ductwork. (b) Drains form as integral part of the ductwork system pressure boundary and are subject to air leakage requirements established in Subarticle SA-4500. (c) For additional guidance on the design of drains, see Nonmandatory Appendix SA-C (SA-C-1220).		
686	SA-4452	*Insulation:* (a) Insulation shall be provided as required to ensure air conditioning function, limit condensation, or provide acoustic noise reduction. (b) Acoustic lining and thermal insulation shall not be applied to the inside of ducts which may become contaminated during normal plant operations. (c) Insulation applied to the outside of ducts shall not prevent access to doors, access hatches, or other components requiring adjustment or maintenance. (d) The fire hazard classification of applied insulation, adhesive, and sealer shall not exceed a flame spread of 25 and smoke developed of 50 in accordance with NFPA-90A. (e) Insulation shall be attached to ductwork using a method which will not adversely affect the system/component safety function.		
687	SA-4453	*Air Distribution Devices:* Design of air distribution devices and their attachments shall comply with Subarticles SA-4200 and AA-4300. The performance rating of air distribution devices shall be determined by actual tests performed in accordance with the ADC Certifications, Rating, and Test Manual 1062 Series, Revision 4 (1997).		
688	SA-4454	*Security Barriers:* The requirements for internal and bullet resistant barriers installed for the purpose of security shall be consistent with appropriate federal regulations. Consideration shall be given to the impact (pressure, noise, etc.) the installation of security and bullet resistant barriers will have on the overall performance of the air treatment system in which they are installed. The dead weight of the security and bullet resistant barriers shall be included in the design of ductwork supports.		
	SA-4500	PRESSURE BOUNDARY LEAKAGE		
689	SA-4510	*General:* *Pressure boundary leakage shall be limited that allowed by the system functional and environmental design requirements. Allowable leakage for a system, or portion of a system, shall be determined considering the following factors (as a minimum):* *(a) control of airborne contamination* *(b) control of space pressure* *(c) control of space temperature* *(d) control of space humidity*		

Requirement Number	Source	Requirement Text	Verification/Validation R - Review A - Analysis T - Test I - Inspection	Design Document Reference (Where is this requirement incorporated in the design)
690	SA-4520	*Applicability:* Pressure boundary leakage shall apply to air cleaning, air cooling, and ventilation systems. Each system's pressure boundary shall include, but not be limited to, the following items as applicable: (a) ductwork as defined in Subsubarticle SA-1130; (b) fan housings; (c) damper frames and valve bodies (and seats, where used for pressure boundary isolation); (d) heating and cooling coil housings (or frames for duct mounted coils); (e) mounting frames for components used for the reduction of radioactive contamination; (f) instrumentation or other components connected to the ductwork; (g) air cleaning unit housings.		
	SA-4530	EVALUATION		
691	SA-4531	*Responsibility:* The Engineer shall evaluate each system to establish the allowable leakage to assure its design ventilation, temperature, and contamination control function is achievable.		
692	SA-4532	*Allowable Leakage Determination:* The following criteria shall be utilized in the determination of allowable leakage: (a) application of governing codes, regulations, and plant specific requirements; (b) consideration of each system's operating mode, including anticipated system upset conditions such as rapid closure of dampers; (c) normal and maximum operating static pressures throughout the pressure boundary; and (d) system internal and external environmental conditions. Guidance for determination of allowable leakage is given in Nonmandatory Appendix SA-B.		
693	SA-4533	*Exceptions to Leakage Requirements* Portions of air cleaning, air cooling, and ventilation systems exhibiting one of the following conditions need not be subjected to quantitative measurement of leakage unless otherwise required by the design specification (however, the system shall be pressurized to normal operating pressure differential (NOPD) to locate and seat all audible leaks): (a) all ducts serving the protected space and located within a protected space, regardless of length; (b) plant vent stacks or ducts outside plant buildings, when high level or mixed mode release credit is not required to meet off-site dose limits; (c) systems which provide air cooling or heating function only located entirely in a clean interspace; (d) other exceptions to quantitative measurement of leakage requirements shall be technically justified and specifically documented with basis by the Owner or his agent.		
694	SA-4534	*Documentation:* Evaluation for allowable leakage of each system, or portion thereof, shall be documented. This documentation shall include the following: (a) identification of system or portion of system (b) governing codes, regulations, and plant specific requirements (c) purpose of leakage control; see Subsubarticle SA-4510 (d) system modes of operation (e) normal operating pressure differential (NOPD) and system operating pressure transient (SOPT) (f) method of derivation of allowable leakage (g) test pressures and associated allowable leakage		
695	SA-4540	*Leakage Testing:* Where leakage testing is specified for a system, as a result of the Engineer's evaluation, it shall be performed in accordance with Subarticle SA-5300 and Section TA of this Code.		

Requirement Number	Source	Requirement Text	Verification/Validation R - Review A - Analysis T - Test I - Inspection	Design Document Reference (Where is this requirement incorporated in the design)
696	SA-4600	*Design Specification:* A Design Specification shall be prepared which consists, as a minimum, of the following information which is relevant to the ductwork and ductwork supports covered by this Section: (a) loads as defined by para. SA-4211; (b) environmental conditions (1) ductwork external design environmental conditions including pressure, temperature, relative humidity, radiation exposure, and hostile environmental factors for all plant conditions; (2) ductwork internal design environmental conditions for all system operating conditions; (c) service conditions as defined by para. AA-4213; (d) design and service limits as defined by para. AA-4214; (e) allowable ductwork leakage, as defined by Subarticle SA-4500; and (f) system safety related function: Identify the function of the ductwork system for each plant condition. The function shall consist of purpose and operational parameters (i.e., flow, leakage, pressure, temperature.) Plant conditions and service limits are defined by paras. AA-4213 and AA-4214.		
	SA-5000	INSPECTION AND TESTING		
697	SA-5100	*General:* Inspection and testing shall be in accordance with the requirements of Subarticles AA-5100, AA-5200, AA-5300, TA-3300, and the additional requirements of this Section.		
698	SA-5120	*Responsibility for Procedures:* When an inspection or test is required herein, written inspection or testing procedures shall be developed (by the parties performing the test or inspection), to the specified requirements of this Section. The inspection or testing shall be performed by personnel qualified in accordance with ASNT SNT-TC-1A as amended by ASME NQA-1 and para. AA-6433.		
	SA-5200	VISUAL INSPECTION		
699	SA-5210	*Visual Inspection—General Requirements:* Visual Inspections shall be performed in accordance with Subarticle AA-5200 and Subsubarticle TA-3510.		
700	SA-5220	*Welded Connections:* Inspection and testing of welds shall be performed in accordance with Subarticle AA-5300 and Article AA-6000.		
701	SA-5230	*Ductwork:* Ductwork shall be visually inspected for proper dimensions including tolerances, as required by Subarticle SA-6500 and governing construction documents. Ductwork fabrication shall meet the applicable requirements of Article SA-6000.		
702	SA-5231	*Joints and Seams:* Joints and Seams shall be visually inspected. Acceptance criteria shall be as follows: (a) Joints and seams shall comply with the requirements of Subarticles SA-6400 and SA-6500. (b) Gasketed joints shall provide uniform gasket compression. Gaskets shall be installed per construction documents. (c) Brazed joints shall comply with the requirements of Subsubarticle AA-6430. (d) Longitudinal or transverse welded joints shall comply with the requirements of Subsubarticle SA-5220. (e) Threaded fasteners shall be provided with locking devices in accordance with para. AA-6258.		
703	SA-5240	*Stiffeners:* Stiffeners shall be visually inspected to ensure compliance with the following acceptance criteria: (a) Stiffeners shall comply with the fabrication and installation requirements of Article SA-6000. (b) Welds shall comply with the requirements of Subsubarticle SA-5220. (c) Threaded fasteners shall be provided with locking devices in accordance with para. AA-6258. (d) Removal of temporary attachments shall be confirmed.		
704	SA-5240	*Ductwork Supports:* Supports shall be visually inspected during installation, after installation, or both in accordance with the following acceptance criteria: (a) Supports shall comply with the fabrication and installation requirements of Subarticles SA-6400 and SA-6500. (b) Welded joints shall comply with the requirements of Subsubarticle SA-5220. (c) Threaded fasteners shall be provided with locking devices in accordance with para. AA-6258. (d) Removal of temporary attachments shall be confirmed.		
705	SA-5300 SA-5310	*Pressure Boundary Leakage Testing—General:* The ductwork system shall be tested to demonstrate compliance with the design leakage requirements identified in Subarticle SA-4500, unless exempted by para. SA-4533.		

Requirement Number	Source	Requirement Text	Verification/Validation R - Review A - Analysis T - Test I - Inspection	Design Document Reference (Where is this requirement incorporated in the design)
706	SA-5320	*Systems Completeness:* Prior to testing, the system shall be complete including all pressure boundary items identified in Subsubarticle SA-4520, with the following exceptions: (a) Terminal air distribution devices may be excluded from the test. (b) Pressure boundary items not yet installed may be excluded from the testing with the approval of the Engineer. In such cases, prototype testing shall be performed to determine the typical leakage rate for the installation method. Detailed procedures shall be prepared to control installation of items not tested with the system. Procedures shall specify any hold points, special surface preparation or finish, and final inspection requirements to ensure that the item is installed similar to the prototype. Typical leak test values shall be increased by a factor of 10 percent and added to the actual leakage in the test report, and noted as such. (c) Systems may be testes in sections, if necessary, as allowed by Subsubarticle SA-5330. Testing shall be in accordance with Subarticle SA-5300.		
707	SA-5330	*Allowances for Testing System Leakage Rates by Sections:* Temporary isolation at a transverse joint shall be allowed subject to the following requirements. (a) Transverse joints not subjected to a quantitative leak test shall be companion angle type or other types which enable visual inspection of the sealing mechanism between mating ductwork sections. (b) Assembled joints utilizing gaskets shall be visually inspected to ensure uniformity of gasket compression. (c) Assembled joints utilizing mastic or liquid sealant shall be visually inspected to ensure that such material has been applied in accordance with the procedure approved by the Engineer. (d) The reduced allowable leakage (L_r) of ductwork sections shall be as follows: $L_r = L_s - R$ $R = (C_j / C_T)L_s$ where R = reduction in allowable leakage in cfm/sq. ft C_j = total perimeter of capped end joints of test section C_T = total perimeter of all joints in tested section, including capped end joints L_s = section allowable leakage		
708	SA-5340	*Testing Procedures:* Prior to pressure boundary leakage testing, test procedures shall be developed in accordance with Subarticle TA-3400. All test equipment shall be specified with the proper range and required accuracy. Test procedures shall include acceptance criteria determined by Subarticle SA-4500, and Subsubarticles SA-5320 and SA-5330.		
709	SA-5350	*Documentation:* A test report shall be prepared to document the pressure boundary leakage test. This report shall include, as a minimum, the following information: (a) system or portion of system tested; (b) specified allowable leakage and test pressure; (c) calculations for ductwork square footage for systems tested by sections; (d) adjustments to allowable leakage per Subsubarticle SA-5330 (d); (e) measured leak rates; (f) list of pressure boundary components which were not installed during the pressure boundary leakage test; (g) test equipment used; including Model No., Serial No., and evidence of calibration; (h) names of test personnel; (i) date of test.		
	SA-5360	ACCEPTANCE CRITERIA		
710	SA-5361	*Quantitative Leakage Tests:* Acceptance criteria for quantitative leakage tests shall comply with Subarticle SA-4500 and Subsubarticle SA-5350(d).		
711	SA-5362	*Non-quantitative Leakage Tests:* For non-quantitative leakage tests allowed by para. SA-4533, the acceptance criteria shall be that audible leaks have been sealed.		

Requirement Number	Source	Requirement Text	Verification/Validation R - Review A - Analysis T - Test I - Inspection	Design Document Reference (Where is this requirement incorporated in the design)
712	SA-5410	*Ductwork Pressure Test:* A pressure test shall be performed at the structural capability pressure per para. TA-3522. This test pressure shall be maintained for the duration of the inspection. Upon completion of this pressure test, duct-work and equipment exhibiting permanent distortion or breach of integrity shall be repaired or replaced. The pressure test shall be repeated after repair or replacement until no permanent distortion or breach of integrity is observed. This test is not required if duct construction specified is equal or greater than the duct construction allowed in SMACNA Rectangular Industrial Duct Construction Standards (1980), Round Industrial Duct Construction Standards (1975), and HVAC Duct Construction Standards (1985) for the system operational pressure transient (SOPT).		
713	SA-5420	*Longitudinal Seam Qualification Test:* Ductwork utilizing folded or punched metal longitudinal seams, shall be pressure tested to qualify the structural design capability of those seams. This pressure test shall be conducted at the beginning of fabrication and before any ductwork with these seams is installed in the facility. The pressure test shall be conducted on each sheet metal gauge utilizing these seams. Seams shall be tested at the structural capability pressure for the system(s).		
	SA-6000	FABRICATION AND INSTALLATION		
714	SA-6100	*General:* Ductwork and supports shall be fabricated and installed in accordance with this Section and Article AA-6000.		
	SA-6120	MATERIALS		
715	SA-6121	*Material Selection:* Materials used in fabrication and installation performed under this Section shall conform to the requirements of Article SA-3000		
716	SA-6122	*Material Identification:* Materials to be utilized in the fabrication and installation of components, parts, and appurtenances shall be identified on fabrication or installation plans, or both and in the specifications, as required in Article AA-8000.		
717	SA-6123	*Repair of Material With Defects:* Material with defects that are discovered or produced during the fabrication and installation process may be used, provided the defects are repaired in accordance with the requirements of Article AA-8000, and for weld repairs, in accordance with Subarticle AA-6300.		
718	SA-6130	*Control of Installation and Fabrication Process:* Quality control procedures shall be prepared and maintained current for all fabrication and installation processes in accordance with the requirements of Article AA-8000.		
719	SA-6140	*Welding:* The welding of ductwork and ductwork supports shall comply with the requirements of AWS D1.1, AWS D1.3, AWS-D9.1 and ASME Code, Section IX, as applicable. Welding and brazing performed in accordance with this Section shall meet the requirements of Subarticles AA-6300 and AA-6400.		
	SA-6200	FABRICATION PROCESS		
720	SA-6210	*Cutting, Forming, Bending, Aligning, and Fitting:* (a) Uncoated metal may be cut, formed, or bent by any means that does not degrade the mechanical or chemical properties of the material. (b) Coated metal may be cut, formed, or bent as described in para. SA-6211. Coating damaged by scratches, gouge marks or the removal of coating shall be repaired in accordance with Subsubarticle AA-6540. (c) Inside bend radii shall not be less than the values given in the appropriate ASTM standard for the material grade. (d) Parts that are to be joined may be fitted, aligned and retained in position during the joining by the use of bars, jacks, clamps, drift pins, tack welds or other temporary attachment. The fitting and alignment process shall not cause damage to the joined parts, or their surfaces, or cause enlargement of bolt holes greater than 20% of hole diameter, or 1/8 in. (3.2 mm), whichever is greater.		
721	SA-6210	*Cutting, Forming, Bending, Aligning, and Fitting:* (e) Temporary welded attachments shall be completely removed after each use. They are subject to the following requirements: (1) Material shall be suitable for welding with no reduction in the structural integrity of the member to which the attachment is secured. (2) Attachment material shall be identified as required by Article SA-3000 (3) The welder and welding procedure shall be qualified in accordance with Subsubarticle SA-6140. (4) The immediate area around and including the temporary attachment shall be marked in a suitable manner so that after attachment removal, the area can be examined in accordance with Article SA-5000. (f) Access doors and access panels shall be fabricated and designed to meet the design requirements of Article SA-4000. (g) Grilles, registers, diffusers and their accessories shall be designed to meet the design requirements of Article SA-4000.		
	SA-6300	MECHANICAL FASTENING		

Requirement Number	Source	Requirement Text	Verification/Validation R - Review A - Analysis T - Test I - Inspection	Design Document Reference (Where is this requirement incorporated in the design)
722	SA-6310	*General:* (a) Nuts for all bolts and studs shall be engaged for the full length of the nut thread. Margins shall be allotted to prevent nut from engaging the unthreaded portion of bolt or stud. (b) High strength bolts, used in making bolted joints, shall be installed in accordance with the requirements of the "Specification for Structural Joints Using A325 or A490 Bolts" AISC Code. Standard bolts used in making bolted joints shall be installed in accordance with the requirements of paragraphs 1.4.4 and 1.5.2 of the "Specification or the Design, Fabrication and Erection of Structural Steel for Buildings" AISC Code. (c) Self-drilling or self-threading screws are permissible if they are qualified in accordance with the design criteria in Article SA-4000.		
723	SA-6310	Mechanical Fastening—General: (d) Rivets must be qualified in accordance with Article SA-4000. (e) Pins for securing insulation should be secured to the metal surface by welding. Other attachment methods are acceptable, if allowed by the Design Specification. Justification of the method of attachment used shall be supported by evaluation or calculation, considering the requirements of Subarticle SA-4600. (f) Flange faces shall be free of joint crevices at corners. These defects shall be eliminated by welding and grinding.		
	SA-6400	FABRICATION TOLERANCES—GENERAL		
724	SA-6410	The fabrication of ductwork shall be accomplished within tolerances detailed in the following tables. These fabrication tolerances provide a method of quality control. Installation tolerances listed below are maximum deviations permitted from design dimensions. Greater deviations, due to rolling mill tolerances are not permitted. (a) Rectangular ducts, measured inside the duct at the joint end or stiffener, shall conform to Table SA-6400-1. (b) Circular ducts, measured by outside circumference or two interior diameters at 90 deg. (+/- 5) to each other, shall conform to Table SA-6400-2.		
725	SA-6410	(c) After fabrication is complete, flat sheet or plate surfaces shall not have a waviness, or bulge, greater than the flatness tolerance given in Table SA-6400-3. (d) The tolerances given in Tables SA-6400-1, 2, and 3 are for manufacturing. Maximum operating deflections are given Subsubarticle SA-4230. (e) Holes prepared for joining mating flanges shall not exceed the required bolt diameter by more than 20%, or 1/8 in. (3.2 mm), whichever is larger, of bolt diameter. The center-to-center alignment of holes must be held to meet this tolerance or one flange must be drilled. Hole spacing shall be a maximum of 4 in. (102.4 mm) center-to-center, with holes at corners of the flange. (f) Grilles, registers, and diffusers shall be fabricated to manufacturer's dimensions and tolerances.		
726	Table SA-6410 1	TABLE SA-6400-1 RECTANGULAR DUCTS - MAXIMUM ALLOWABLE TOLERANCES 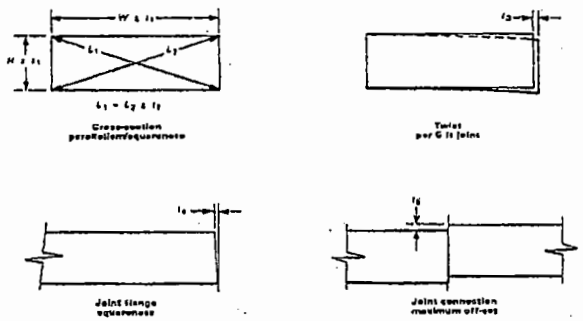 RECTANGULAR DUCTS MAXIMUM ALLOWABLE TOLERANCES — INCHES W or H | t_1 | t_2 | t_3 | t_4 | t_5 less 12" | 1/16 (1.6 mm) | 1/4 (6.4 mm) | 1/8 (3.2 mm) | 1/8 (3.2 mm) | 1/16 (1.6 mm) 12" to 18" | 1/8 (3.2 mm) | 1/4 (6.4 mm) | 3/16 (4.8 mm) | 1/8 (3.2 mm) | 1/8 (3.2 mm) 18" to 24" | 1/8 (3.2 mm) | 3/8 (9.5 mm) | 3/16 (4.8 mm) | 1/8 (3.2 mm) | 1/8 (3.2 mm) 24" to 48" | 1/8 (3.2 mm) | 3/8 (9.5 mm) | 3/16 (4.8 mm) | 1/8 (3.2 mm) | 1/8 (3.2 mm) 48" & up | 1/8 (3.2 mm) | 1/2 (12.7 mm) | 1/4 (6.4 mm) | 1/8 (3.2 mm) | 3/16 (4.8 mm)		

Requirement Number	Source	Requirement Text	Verification/Validation R - Review A - Analysis T - Test I - Inspection	Design Document Reference (Where is this requirement incorporated in the design)
727	Table SA-6410 2	TABLE SA-6400-2 CIRCULAR DUCTS - MAXIMUM ALLOWABLE TOLERANCES 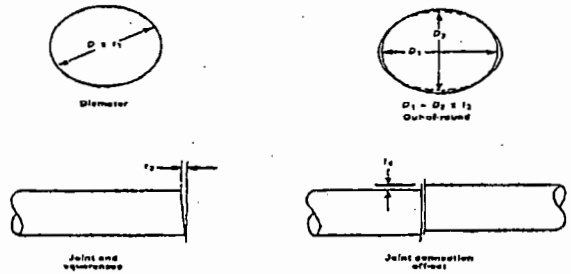 CIRCULAR DUCTS MAXIMUM ALLOWABLE TOLERANCES—INCHES Diameter / t_1 / t_2 / t_3 / t_4 Ins. 18" / 1/16 (1.6 mm) / 1/4 (6.4 mm) / 1/8 (3.2 mm) / 1/16 (1.6 mm) 18" to 36" / 1/8 (3.2 mm) / 3/8 (9.5 mm) / 1/8 (3.2 mm) / 1/8 (3.2 mm) 36" to 54" / 1/8 (3.2 mm) / 1/2 (12.7 mm) / 1/8 (3.2 mm) / 1/8 (3.2 mm) 54" to 48" / 1/8 (3.2 mm) / 3/4 (19.1 mm) / 1/8 (3.2 mm) / 1/8 (3.2 mm) 48" & up / 1/8 (3.2 mm) / 1 (25.4 mm) / 1/8 (3.2 mm) / 1/16 (1.6 mm)		

RPP-24544 REV 1d

G5-209

Requirement Number	Source	Requirement Text	Verification/Validation R - Review A - Analysis T - Test I - Inspection	Design Document Reference (Where is this requirement incorporated in the design)
728	Table SA-6410 3	TABLE SA-6400-3 FLATNESS OF SURFACE - MAXIMUM ALLOWABLE WAVINESS TOLERANCE 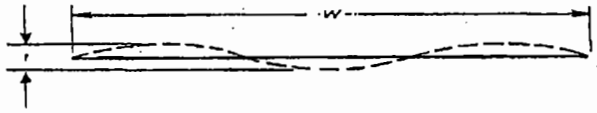 FLATNESS OF SURFACE MAXIMUM ALLOWABLE WAVINESS TOLERANCE r = waviness tolerance of flat surfaces between duct edges and/or adjoining stiffeners; it shall not exceed 125% of allowed Manufacturers' tolerance as specified by: Cold rolled steel sheet — ASTM-A568 Cold rolled steel plate — ASTM-A6 Table 14 Hot rolled steel sheet — ASTM-A568 Hot rolled steel plate — ASTM-A6 Table 15 Galvanized steel sheet — ASTM-A525 Table II		
729	SA-6500	*Installation Tolerances:* Ductwork and their supports shall be installed within the tolerance specified by approved construction documents. These tolerances shall comply with the design requirements of Article SA-4000.		
730	SA-6600	*Cleaning, Finishing, and Coating:* Galvanized surfaces shall be free of damage which impairs the effectiveness of the coating. Surfaces shall be repaired in accordance with Subsubarticle AA-6540. Painted surfaces shall be prepared and finished as described in Article AA-6000. Painted surfaces shall be free of scratches and welding damage. Surfaces shall be repaired and repainted in accordance with Article AA-6000. Required marking, for identification, shall be on the exterior of each section.		
	SA-7000	PACKAGING, SHIPPING, RECEIVING, STORAGE, AND HANDLING		
731	SA-7100	*General:* Packaging, shipping, receiving, storage, and handling requirements shall be in accordance with Article AA-7000 and this Section.		
	SA-7200	PACKAGING		
732	SA-7210	*General:* Ductwork and accessory items packaging requirements are dependent upon the protection level as described by Subarticle AA-7230. Additional clarification or exceptions are provided below: (a) Individual duct sections, assembled or unassembled, shall not require special packaging or end closures. These individually identified items may be pelletized for convenience. Protection equal to level "D" of NQA-2, Part 2.2, paragraph 2.2.4, is required. (b) Acoustically lined or insulated duct sections shall have protective wrapping to prevent water damage. Protection equal to level "C" of NQA-2, Part 2.2, paragraph 2.2.4, is required.		
733	SA-7210	*General:* (c) Grilles, registers, and diffusers shall be packaged individually by the Manufacturer to prevent any degradation. Protection equal to level "C" of NQA-2, Part 2.2, paragraph 2.2.4, is required. (d) Extractors, turning vanes, and splitter dampers shall be packaged individually by the Manufacturer to prevent damage and degradation until installation. Protection equal to level "C" of NQA-2, is required. Should these devices be installed into the ductwork sections before shipment, all moving parts shall be secured and all sliding or operation points shall be protected from degradation by methods equal to level "C." The basic duct section level shall remain "D" of NQA-2, Part 2.2, paragraph 2.2.4.		
734	SA-7300	*Shipping:* This section relates to all transportation methods from the original manufacturer, or supplier, to the job site. In addition to the applicable Federal and State transport regulations, the provisions of Article AA-7000 shall also apply.		
735	SA-7400	*Receiving:* Receiving at the job site or intermediate location, where additional work is to be performed or for long term storage, shall be accomplished in accordance with the provisions of Article AA-7000. It shall be the requirement, at any receiving point, to have adequate descriptions of items to permit suitable inspection for conformance, damage acknowledgement, and proper documentation. Records of such inspections shall be maintained until the item is reshipped or installed.		

Requirement Number	Source	Requirement Text	Verification/Validation R - Review A - Analysis T - Test I - Inspection	Design Document Reference (Where is this requirement incorporated in the design)
	SA-7500	STORAGE		
736	SA-7510	*General:* Ductwork and accessory item storage requirements are dependent upon the protection level described by Subarticle AA-7230. These levels shall be the required storage requirements except in certain circumstances as listed below: (a) Duct sections shall be stored, on adequate dunnage, in accordance with level "D" requirements. Lined or insulated ductwork, unless water-proofed at time of fabrication, shall be stored in accordance with level "C" requirements. Extractor and splitter dampers shall have moving parts protected in accordance with level "C" requirements. (b) Extractors, turning vanes, and splitter dampers shall be stored in accordance with the applicable levels in paragraph SA-7214. (c) Ductwork supports shall be stored in accordance with level "C" requirements for uncoated carbon steel and level "D" requirements for other ductwork support materials. (d) Components covered by others sections of this Code that are installed into an integral assembly which is covered by this Section, shall be		
	SA-8000	QUALITY ASSURANCE		

Requirement Number	Source	Requirement Text	Verification/Validation R - Review A - Analysis T - Test I - Inspection	Design Document Reference (Where is this requirement incorporated in the design)
737	SA-8100	*General:* Equipment and material covered under this Section shall be manufactured, fabricated, installed, inspected, and tested in accordance with the provisions of a Quality Assurance Program meeting the requirements of Article AA-8000.		
738	SA-8200	*Material Identification:* Measures shall be established for controlling and identifying material throughout the manufacturing process and during shipment in accordance with Article AA-8000.		
739	SA-8300	*Drawings and Documentation:* As a minimum, the following drawings and documentation shall be provided to the Owner: (a) design parameters (b) material certifications (c) maximum operating pressure (d) structural capability pressure (e) test pressures (f) basis and quantity for maximum allowable leakage (g) system layout drawings (h) welding procedures (i) visual inspection reports (j) test acceptance criteria (k) leak test reports (l) environmental qualification reports (m) ductwork and ductwork support fabrication details		
	SA-9000	NAMEPLATE AND STAMPING		
740	SA-9100	*General:* All items manufactured under the requirements of this Section shall be identified to assure compliance with the requirements of Subarticle AA-8200, and Subsubarticles AA-9130 and AA-9140. Records, as necessary to assure compliance with Subarticle AA-8200, shall be maintained by the responsible organization in accordance with the approved quality assurance program.		
741	SA-9111	*Ducts:* Each duct section shall have noncorrosive, permanent identification markings. Identification markings shall relate each duct section to the applicable design and fabrication documents. Markings shall be located on the exterior of the duct. Markings need not be visible after installation is complete; however, markings shall be retrievable. It is recommended that the identification markings be placed on the "incoming air" end of the duct joint, as close to the end of the joint as possible, and not in such position as to be hidden or nonreadable.		
742	SA-9112	*Ductwork Supports:* Each duct support shall have noncorrosive, permanent identification markings. Identification markings shall relate each ductwork support to the applicable design and fabrication documents.		
743	SA-9113	*Air Distribution Accessories:* Air distribution devices (i.e., grilles, registers, diffusers, louvers, etc.) shall be marked, stamped or provided with a nameplate which shall relate to the design and fabrication documents. Identification shall be retrievable after completed installation.		
	TA	SECTION TA: FIELD TESTING OF AIR TREATMENT SYSTEMS		
	TA-3000	GENERAL INSPECTION AND TEST REQUIREMENTS		
744	TA-3100	*General:* All inspections and tests shall be conducted in accordance with these requirements and the specific requirements of TA-4000.		
745	TA-3200	*Test Instruments:* A calibration program shall be established in accordance with the Owner's Quality Assurance Program. All permanent and temporary test instruments used in the conduct of tests required by TA-4000 shall be in calibration. Instrument accuracy shall meet or exceed the requirements of Table TA-3200.		
746	TA-3210	*Range Requirements:* The full-scale range of instruments shall be limited as necessary to ensure that the readings are within the accuracy requirements of Table TA-3200.		

Requirement Number	Source	Requirement Text	Verification/Validation R - Review A - Analysis T - Test I - Inspection	Design Document Reference (Where is this requirement incorporated in the design)
747	Table TA-3200	TABLE TA-3200 INSTRUMENT ACCURACY REQUIREMENTS Measurement / Range / Accuracy Pressure / >1.0 psig (>7.0 kPa (gage)) / ±2.0% Pressure / from 1.0 in. wg to 1.0 psig (0.25 kPa to 7.0 kPa (gage)) / ±0.1 in. wg (±0.025 kPa) Pressure / from 0.1 in. wg to 1.0 in. wg (25 Pa to 250 Pa (gage)) / ±0.01 in. wg (±2.5 Pa) Temperature / Variable / ±2.0°F (±1.0°C) Temperature (Note (1)) / Variable / ±0.5°F (±0.25°C) Vibration / Variable / Per TA-3241 Flow / Variable / ±5.0% Velocity (airflow) / Variable / ±3.0% Speed / Variable / ±2.0% Time / Variable / ±1.0 sec Electrical voltage / Variable / ±1.0% Electrical resistance / Variable / ±1.0% Challenge aerosol concentration / ... / Per TA-3242 Challenge gas concentration / ... / Per TA-3243 NOTE: (1) Required for pressure testing in Mandatory Appendix TA-III.		
748	TA-3220	*Instrument Fluctuation:* Symmetrical damping devices or averaging techniques may be used to reduce random signal fluctuations. Hydraulic instruments may be damped by using gauge snubbers or by throttling valves in instrument lines.		
749	TA-3230	*Evaluation Following Test Instrument Loss, Damage, or Calibration Failure:* When a test instrument is lost, damaged, or otherwise fails to meet the requirements of Table TA-3200 during calibration, all test results obtained using the instrument shall be evaluated, dating back to the time of the previous calibration. If the evaluation does not confirm that the instrument met the acceptance criteria for the test(s) in question, the test(s) shall be repeated with calibrated instruments.		
	TA-3240	SPECIFIC INSTRUMENT ACCURACY REQUIREMENTS		
750	TA-3241	*Vibration Instrument:* Vibration instrument accuracy shall be at least +/-10%. The minimum frequency response range of the vibration measuring instrument shall be approximately one third of the minimum shaft speed. For rotating components, the maximum frequency response range shall be at least two times the rotational shaft speed of the component being measured. For reciprocating components, the maximum frequency response range shall be at least two times the sped of the crankshaft, times the number of unique planes occupied by a piston throw.		
751	TA-3242	*Challenge Aerosol Measuring Instrument:* The Challenge Aerosol Measuring Instrument shall be verified to have a linear range of at least 10^5 times the minimum detectable quantity of the instrument with an accuracy in accordance with the Facility Project Specifications and Owner's Quality Assurance Program.		
752	TA-3243	*Challenge Gas Measuring Instrument:* The Challenge gas Measuring Instrument shall be verified to be capable of distinguishing challenge gas from background and measuring challenge gas over a linear range of at least 10^5 times the minimum detectable quantity of the instrument with an accuracy in accordance with the Facility Project Specifications and Owner's Quality Assurance Program.		
	TA-3300	REFERENCE VALUES		
753	TA-3310	*Establishment of Reference Values:* Reference values shall be determined from results achieved during acceptance testing (seeTA-4000), when a component or system is proven to be operating within the acceptable limits of the Owner's Design Specification. Operating tests and inspections specified in TA-4000 shall be observed, measured, or calculated under conditions readily reproducible during subsequent in-service tests to allow for direct comparison of test results. All test results and associated analyses shall be included in the test procedure documentation (see TA-6300).		

Requirement Number	Source	Requirement Text	Verification/Validation R - Review A - Analysis T - Test I - Inspection	Design Document Reference (Where is this requirement incorporated in the design)
754	TA-3400	*Inspections and Test Requirements:* Acceptance tests shall be conducted following initial component installation but prior to releasing the system for normal operations. Applicable acceptance tests shall also be used to obtain new reference values and verify design function following component replacement, repair, modification, or maintenance. Equipment shall be evaluated as separate components and as functioning parts of an integrated system. The Owner shall define system test boundaries and evaluate system performance with respect to system functional requirements in accordance with the Owner's Design Specifications. Field acceptance tests shall be implemented as applicable and in accordance with this Section. Test designations associated with tests required by TA-4000 are listed in Table TA-3400. Within the context of TA-4000, when a test is not associated with a designator it shall be considered a prudent action and not a test requirement.		
755	Table TA-3400	**TABLE TA-3400** **TEST DESIGNATIONS** Test — Designator Air-aerosol mixing test — AA Airflow distribution test — AD Differential pressure test — DP Differential temperature test — DT Flow rate test — Q/ Functional test (Note (1)) — F Hydrostatic test — HYD In-place leak test — IP Laboratory analysis (adsorbent methyl-iodide penetration) — LAB Electrical performance test — AMP Leak test — PL Structural capability test — PS Rotational speed test — N Bearing temperature test — Tb Vibration test — Vb Visual inspection — VT NOTE: (1) Functional tests consist of various mechanical actuation and performance verifications and are detailed separately in each test article.		
756	TA-3410	*Inspection and Test Parameters:* Parameters which need to be observed, calculated, and recorded in order to meet the requirements of this Section shall be identified for each system based on the functional requirements of the Owner's Design Specification and shall be included in the test procedure documentation (see TA-6300).		
757	TA-3420	*System Operating Conditions:* Operating conditions required for acceptance testing shall be determined for each system. These conditions and acceptance criteria shall be based on the requirements of the Owner's Design Specification and shall be included in the test procedure documentation (see TA-6300).		
758	TA-3430	*Procedure Requirements:* The Owner shall be responsible for the development and implementation of written test procedures that meet the requirements of this section. Each equipment test section consists of generic (see TA-3500) and specific (see TA-4000) test requirements and acceptance criteria which apply to each of the systems in the facility. The Owner shall document which requirements are applicable in the test procedure documentation (see TA-6300).		
759	TA-3440	*Test Reports:* Test reports shall be prepared in accordance with TA-6300.		
760	TA-3500	*Generic Tests:* Generic Tests as specified in TA-3510 through TA-3533 shall be used in Article TA-4000 where applicable.		
761	TA-3510	*Visual Inspections (VT):* Visual inspections shall be conducted in accordance with AA-5000 and the applicable portions of Mandatory Appendix TA-I. Field acceptance visual inspections, required in TA-4000, shall include verification of component installation in accordance with the Owner's Design Specification and the applicable sections of this Code. Acceptance inspections shall be conducted prior to releasing the equipment for normal operation.		

Requirement Number	Source	Requirement Text	Verification/Validation R - Review A - Analysis T - Test I - Inspection	Design Document Reference (Where is this requirement incorporated in the design)
762	TA-3520	*Pressure Boundary Tests:* Pressure boundary tests consist of hydrostatic (or pneumatic) tests for hydraulic systems, leak tests for refrigerant systems, and structural capability and leak tests for ducts and housings, including fan and damper housings.		
763	TA-3521	*Hydrostatic Tests (HYD):* Hydrostatic tests shall be conducted at the hydrostatic pressure defined by the Owner and shall verify that he component will not rupture, leak, or be permanently deformed under design pressure loads. Testing shall be conducted in accordance with the design codes used in the Owner's Design Specification (e.g., ASME B31.1). Pneumatic testing may be used in lieu of water where allowed by the applicable codes and in the Owner's Design Specification.		
764	TA-3522	*Structural Capability Test (PS):* Structural capability test shall be conducted at the structural capability pressure defined by the Owner's Design Specification and shall verify that the component will not rupture or be permanently deformed under design pressure loads. Testing shall be conducted in accordance with Mandatory Appendix TA-II.		
765	TA-3523	*Leak Test, Duct, Housing, and Frames (PL):* Leak tests for duct and housing sections shall be conducted using either the pressure decay method or the constant pressure method to verify that the leak rate for duct or housing does not exceed the allowable limit established for the system. Testing shall be conducted in accordance with Mandatory Appendix TA-III. Leak testing performed to satisfy Section SA of this Code may be used to meet these test requirements when the test method is compatible with Mandatory Appendix TA-III. An optional leak test for HEPA filter and adsorber mounting frames is authorized to be conducted in conjunction with the housing leak test by blanking off the frame openings and pressurizing the isolated test boundary. This procedure is useful for detecting small leaks in the mounting frame during acceptance testing. This test is used to verify that there are no defects in a frame that may cause failure of the in-place leak test. Testing should be conducted in accordance with Nonmandatory Appendix TA-A.		
766	TA-3524	*Leak Test, Refrigeration Piping and Coils (PL):* Leak tests of refrigerant piping and coils shall be conducted in accordance with Mandatory Appendix TA-VIII.		
767	TA-3530	*Functional Tests (F):* A functional test shall be used to verify mechanical and system performance parameters of equipment. Functional tests include component and system tests as required in Article TA-4000. Component functional tests are used to verify the operational readiness of individual components. Integrated system functional tests are used to verify that all of the system components will operate together under normal operating or simulated conditions and will meet all of the performance requirements of the Owner's Design Specification.		
768	TA-3531	*Test Conditions:* Equipment shall be tested within the normal operating range specified in the Owner's Design Specification except as otherwise specified in TA-4000.		
769	TA-3532	*Restoration of Function Following Testing:* Mechanical and electrical equipment status shall be restored as required by plant conditions and according to approved procedures following completion of any test.		
770	TA-3533	*Vibration Test (Vb):* Vibration measurements shall be taken on the accessible motor, fan, compressor, and pump bearing housings in at least two different orthogonal planes approximately perpendicular to the line of the rotation shaft. When the bearing housing is not accessible, the frame of the component may be used if it will be representative of bearing housing vibration. When portable vibration instruments are used, reference points shall be clearly identified on the component being measured to permit duplication in both location and plane.		
771	TA-3600	*Acceptance Criteria:* Results of tests described on Article TA-4000 shall be subject to the acceptance criteria in TA-3610 through TA-3630 and to the applicable operating and design criteria specified by the Owner's Design Specification. Acceptance criteria are specified in TA-4000 only when they affect the quality of other tests. When test results do not met the applicable acceptance criteria, the corrective actions required by TA-5000 shall be initiated.		
772	TA-3610	*Visual Inspection:* Visual inspections are acceptable when there are no visual indications of improper installation, physical damage, structural distress or degradation that would impair the ability of a component or system to perform its intended function.		
773	TA-3620	*Pressure Boundary Tests:* Pressure boundary tests are acceptable when there is no permanent structural deformation or leaks in excess of the limits specified in the applicable sections of this Code and the Owner's Design Specification.		
774	TA-3630	*Functional Tests:* Functional tests are acceptable when they meet the requirements of the applicable sections of this Code and the Owner's Design Specification.		
	TA-4000	FIELD ACCEPTANCE TESTS (Not Applicable to Shop Testing)		

Requirement Number	Source	Requirement Text	Verification/Validation R - Review A - Analysis T - Test I - Inspection	Design Document Reference (Where is this requirement incorporated in the design)
775	TA-4000	*General:* Field acceptance tests shall be conducted following initial system installation but prior to releasing the equipment for normal operation. Application inspections and tests shall be conducted to verify compliance with the Owner's Design Specifications following equipment replacement, modification, or abnormal incident. Repair or maintenance that has not affected acceptance test reference values does not require repeating acceptance tests. Within the context of Article TA-4000, a test not associated with a test designator is considered to be a prudent action and not a test requirement.		
	TA-4100	FAN ACCEPTANCE TESTS		
776	TA-4110	This section provides the field acceptance test requirements for fans, motors, and related accessories. Integrated system testing shall be conducted in accordance with TA-4900. *Acceptance Test Requirements:* Acceptance tests shall be conducted with the fan operating at a flow rate within the normal operating range for the system. The tests listed in Table TA-4110 shall be conducted and test results verified to be within the acceptance limits of the Owner's Design Specification, the applicable portions of Section BA of this Code, and as required in TA-3500 and TA-4160. These test results shall be documented in accordance with TA-6300 and shall be retained as reference values for comparison during periodic in-service tests.		
777	Table TA-4110	**TABLE TA-4110 FAN ACCEPTANCE TESTS** Test(s) / Designator / Measure / Observe Visual inspection / VT / / x Structural capability / PS / x / Leak / PL / x / System flow balance / F / x / Mechanical run / F / / x Flow rate / Qf / x / Differential pressure / DP / x / Electrical / AMP / x / Rotational speed / N / x / Vibration / Vb / x / Bearing temperature / Tb / x / Fan performance/airflow capacity / F / x /		
778	TA-4120	*Visual Inspection (VT):* A visual inspection of the fan and associated components shall be conducted in accordance with TA-3510 and Mandatory Appendix TA-I (I-1100).		
	TA-4130	PRESSURE BOUNDARY TESTS		
779	TA-4131	*Structural Capability Test (PS):* When a fan housing is part of the system pressure boundary, a structural capability test shall be conducted to verify structural capability of the fan housing and connections in accordance with TA-3522 and Mandatory Appendix TA-II. The fan housing may be tested concurrent with the duct and housing structural capability test specified in TA-4331.		
780	TA-4132	*Leak Test, Fan Housing (PL):* When a fan housing is part of the system pressure boundary, a pressure boundary leak test shall be conducted to verify leak tightness of the fan housing and attached interfaces in accordance with TA-3523 and Mandatory Appendix TA-III. The fan housing may be tested concurrent with the duct and housing leak test specified in TA-4332.		
781	TA-4133	*Leak Test, Fan Shaft Seal (PL):* When a fan shaft seal is part of the system pressure boundary, a pressure boundary leak test shall be conducted to verify leak tightness of the shaft seal in accordance with TA-3523 and Mandatory Appendix TA-III. The shaft seal may be tested concurrent with the duct and housing leak test specified in TA-4332. However, the shaft seal leakage rate shall be evaluated (qualitatively) independent of the overall system leak rate. The qualitative evaluation of the leakage shall be included in the test report.		
782	TA-4140	*Component Functional Tests:* The following prerequisites shall be conducted on the fan and motor assemblies prior to the system functional tests specified TA-4150.		
783	TA-4141	*Electrical Prerequisites:* Prior to the initial energizing of the fan, the electrical power circuits shall be checked for installation, circuit continuity, voltage capacity, and protective relay device settings.		

Requirement Number	Source	Requirement Text	Verification/Validation R - Review A - Analysis T - Test I - Inspection	Design Document Reference (Where is this requirement incorporated in the design)
784	TA-4142	*Control System Prerequisites:* Prior to the initial energizing of the fan, controls shall be calibrated and verified operational.		
785	TA-4143	*Startup Prerequisites:* Prior to the initial energizing of the fan, The fan and motor shaft shall be manually rotated to verify moving parts are free of interference. The motor shall be momentarily energized to verify correct rotational direction. The fan shall be restarted and stable operation (no surging) verified. Fan and motor vibration, bearing temperature, motor electrical amperage and phase balance, fan speed, differential pressure, and airflow shall be monitored. Following one hour of operation, or immediately after observation of unusual performance (i.e., unstable performance), the fan shall be secured and a detailed visual inspection for signs of damage or degradation shall be conducted.		
786	TA-4150	*System Functional Tests:* This section provides the system level field acceptance test requirements for fan systems.		
787	TA-4151	*System Flow Balance Test (F):* A system flow balance shall be conducted. Recommended procedures include SMACNA, NEBB, ACGIH, or AABC (see Article TA-2000). System flow balancing may be conducted using artificial resistance in lieu of filters. However, final component reference values shall be obtained with clean system components installed. TA-4152 through TA-4159 shall be conducted in the same time frame.		
788	TA-4152	*Mechanical Run Test (F):* Prior to conducting the tests specified in TA-4153 through TA-4159, the fan shall be operated at the design flow rate for at least 15 minutes and stable system operation (no surging) verified.		
789	TA-4153	*Flow Rate Test (Qf):* The fan flow rate shall be measured. Recommended procedures include ACGIH "Industrial Ventilation" or equivalent.		
790	TA-4154	*Static Pressure Test (DP):* The fan inlet and outlet static pressure and velocity pressure shall be measured and the overall fan static pressure determined.		
791	TA-4155	*Electrical Tests (AMP):* The fan motor supply voltage and amperage shall be measured for each phase.		
792	TA-4156	*Rotational Speed Test (N):* The rotational speed f the fan shall be measured.		
793	TA-4157	*Vibration Test (Vb):* The vibration of each fan and motor bearing shall be measured in accordance with TA-3533.		
794	TA-4158	*Bearing Temperature Test (Tb):* Following bearing temperature stabilization, the fan and motor bearing temperatures shall be measured. Stabilization occurs when temperature changes are less than or equal to +/- 3 degrees F in a 10 minute period.		
795	TA-4159	*Fan Performance/Airflow Capacity Test (F):* For systems with filter or absorber banks, the fan performance shall be measured under maximum design dirty filter conditions. This may be done by increasing the system resistance to the design dirty filter differential pressure, (design basis maximum dirty filter condition), using artificial resistance. The measurement procedures in TA-4152 through TA-4158 shall be used.		
796	TA-4160	*Acceptance Criteria:* The following acceptance criteria are in addition to the requirements of TA-3600.		
797	TA-4161	*Airflow Capacity Test Acceptance Criteria:* Airflow capacity shall be within +/- 10% of design when tested in the normal clean and maximum dirty filter conditions.		
798	TA-4162	*Fan Performance Acceptance Criteria:* Fan performance (flow, static pressure, horsepower) shall meet the specifications of the Manufacturer's fan performance curve and the Owner's Design Specification.		
799	TA-4200	*Damper Acceptance Tests:* This section provides the field acceptance test requirements for dampers and related accessories. Integrated system testing shall be conducted in accordance with TA-4900.		
800	TA-4210	*Acceptance Test Requirements:* Acceptance tests shall be conducted with the dampers installed in the system. The tests listed in Table TA-4210 shall be conducted and test results verified to be within the acceptance limits of the Owner's Design Specification, the applicable portions of Section DA of this Code, and as required in TA-3600. These test results shall be documented in accordance withTA-6300 and shall be retained as reference values for comparison to periodic in-service test results.		

Requirement Number	Source	Requirement Text	Verification/Validation R - Review A - Analysis T - Test I - Inspection	Design Document Reference (Where is this requirement incorporated in the design)
801	Table TA-4210	**TABLE TA-4210 DAMPER ACCEPTANCE TESTS** Test(s) / Designator / Measure / Observe Visual inspection / VT / / x Structural capability / PS / x / Leak / PL / x / Position indication / F / x / Exercise / F / / x Static timing / F / x / Flow control / F / / x Fire damper / F / / x Dynamic time / F / x / Interlock / F / / x		
802	TA-4220	*Visual Inspection (VT):* A visual inspection of the damper and associated components shall be conducted in accordance with TA-3510 and Mandatory Appendix TA-I, Subarticle TA-I-1200.		
	TA-4230	PRESSURE BOUNDARY TESTS		
803	TA-4231	*Structural Capability Test, Damper Housing (PS):* When the damper housing and actuator shaft seal are part of the system pressure boundary, a structural capability test shall be conducted to verify the structural capability of the damper housing, shaft seal, and interfaces in accordance with TA-3522 and Mandatory Appendix TA-II. The damper housing may be tested concurrent with the duct and housing structural capability test specified in TA-4331.		
804	TA-4232	*Structural Capability Test, Damper Blades (PS):* Isolation dampers shall be tested to verify the structural capability of the damper blade and seat in accordance with TA-3522 and Mandatory Appendix TA-II. The damper blades and seat may be tested concurrent with the duct and housing structural capability test specified in TA-4331.		
805	TA-4233	*Leak Test, Damper Housing (PL):* When a damper housing is part of the system pressure boundary, a pressure boundary leak test shall be conducted to verify leak tightness of the damper housing and interfaces in accordance with TA-3523 and Mandatory Appendix TA-III. The damper housing may be tested concurrent with the duct and housing leak test specified in TA-4332.		
806	TA-4234	*Leak Test, Damper Shaft Seal (PL):* When a damper shaft seal is part of the system pressure boundary, a pressure boundary leak test shall be conducted to verify leak tightness of the shaft seal in accordance with TA-3523 and Mandatory Appendix TA-III. The shaft seal may be tested concurrent with the duct and housing leak test specified in TA-4332. However, the shaft seal leak rate shall be evaluated (qualitative) independently of the overall system leak rate. The qualitative evaluation of the leakage shall be included in the test report.		
807	TA-4235	*Leak Test, Damper Seat (PL):* When dampers have seat leakage limits, a leak test shall be conducted in the direction the damper is expected to function, in accordance with TA-3523 and Mandatory Appendix TA-III. The seat leak rate shall be tested by blanking off or otherwise isolating a duct section upstream of the damper. The leak test shall be performed with the damper cycled closed using its normal closing mechanism (without any additional manual assistance).		
808	TA-4240	*Component Functional Tests:* Component functional tests shall verify that the damper is operational prior to conducting the system functional tests specified in TA-4250.		
809	TA-4241	*Electrical Prerequisites:* Prior to the initial energizing of the damper operator, the electrical circuits shall be checked for proper installation, circuit continuity, voltage capacity and protective relay device settings.		
810	TA-4242	*Pneumatic Prerequisites:* Prior to the initial pressurizing of the damper control system, pneumatic systems shall be checked for proper installation and leak tightness.		
811	TA-4243	*Control System Prerequisites:* Prior to the initial energizing of the damper operator, control instrumentation shall be calibrated and verified to be operational.		
812	TA-4244	*Position Indication Test (F):* Dampers having remote position indicators shall be observed during operation to verify that the mechanical damper position corresponds to the remote indication.		

Requirement Number	Source	Requirement Text	Verification/Validation R - Review A - Analysis T - Test I - Inspection	Design Document Reference (Where is this requirement incorporated in the design)
813	TA-4245	*Exercise Test (F):* Power operated dampers shall be fully cycled using a control switch or other actuating device to verify operation. Manual dampers, including balancing dampers, shall be fully cycled to verify operation. Fire dampers shall be tested in accordance with TA-4252.		
814	TA-4246	*Static Timing Test (F):* Power operated dampers (electrical or pneumatic), that are required to operate within a specified time limit, shall be tested by measuring time for the damper to fully open or fully close (as required by the Owner's Design Specification).		
	TA-4250	SYSTEM FUNCTIONAL TESTS		
815	TA-4251	*Flow Control Damper Functional Test (F):* Power operated dampers that control air flow shall be observed under throttled (throughout its anticipated operating range) flow conditions to verify free movement and stable operation.		
816	TA-4252	*Fire Damper Test (F):* Fire dampers shall be tested, using a normal or simulated actuation signal, to verify activation under design airflow conditions.		
817	TA-4253	*Dynamic Timing Test (F):* Isolation dampers having a required actuation response time shall be timed to the fully open or fully closed position (as required by the Owner's Design Specification) under design airflow conditions.		
818	TA-4254	*Interlock Test (F):* Dampers that have an opening or closing function interlocked with other components (e.g., fans, other dampers) shall be tested to verify interlock action.		
	TA-4300	DUCT, HOUSING, AND MOUNTING FRAME ACCEPTANCE TESTS		
819	TA-4310	*Acceptance Test Requirements:* Acceptance tests shall be conducted with the ducts, housings and mounting frames installed in the system. The tests listed in Table TA-4310 shall be conducted and test results verified to be within the acceptance limits of the Owner's Design Specification, the applicable portions of Section SA of this Code, and as required in TA-3600. These test results shall be documented in accordance with TA-6300 and shall be retained as reference values for comparison to periodic in-service test results.		
820	Table TA-4310	Table TA-4310, Duct, Housing, and Frame Acceptance Tests: Test — Designator — Measure — Observe Visual Inspection — VT Structural Capability Test — PS Leak tests — PL		
821	TA-4320	*Visual Inspection (VT):* A visual inspection of ducts, housings, and mounting frames, shall be conducted in accordance with TA-3510 and Mandatory Appendix TA-I (TA-I-1300).		
822	TA-4330	*Pressure Boundary Tests:* Pressure boundary tests apply to all ducts housings, and interface connections that are parts of the system. Individual components may be tested at separate times provided that all system pressure boundaries are ultimately tested prior to the system being placed into service.		
823	TA-4331	*Structural Capability Test, Duct and Housing (PS):* A structural capability test shall be conducted to verify structural capability of ducts and housings in accordance with TA-3522 and Mandatory Appendix TA-II.		
824	TA-4332	*Leak Test, Duct and Housing (PL):* A pressure boundary leak test shall be conducted to verify leak tightness of the ducts and housings in accordance with TA-3523 and Mandatory Appendix TA-III.		
825	TA-4333	*Leak Test, Mounting Frame (optional) (PL):* A mounting frame pressure test may be used to detect leaks in the HEPA filter and adsorber mounting frames that could affect the results of the in-place leak tests in TA-4600 and TA-4700. This test is optional and may be conducted in accordance with Nonmandatory Appendix TA-A.		
	TA-4400	REFRIGERATION EQUIPMENT ACCEPTANCE TESTS		
826	TA-4410	*Acceptance Test Requirements:* Acceptance tests shall be conducted with the refrigeration equipment in service under normal operating conditions. The tests listed in Table TA-4410 shall be conducted and test results verified to be within the acceptance omits of the Owner's Design Specification, applicable portions of Section RA of this Code, and as required in TA-3600. These test results shall be documented in accordance with TA-6300 and shall be retained as reference values for comparison to periodic in-service test results.		

Requirement Number	Source	Requirement Text	Verification/Validation R - Review A - Analysis T - Test I - Inspection	Design Document Reference (Where is this requirement incorporated in the design)
827	Table TA-4410	TABLE TA-4000-4 REFRIGERATION EQUIPMENT ACCEPTANCE TESTS Test / Designator / Measure / Observe Visual inspection / VT / / • Leak test / PL / / • Hydrostatic test / HYD / / • Valve position indication test / F / / • Valve exercise test / F / / • Valve timing test / F / • / Flow control valve test / F / / • Mechanical run test / F / / • Performance test / F / • / Electrical test / AMP / • / Rotational speed test / N / • / Vibration test / Vb / • / Bearing temperature test / Tb / • /		
828	TA-4420	*Visual Inspection (VT):* A visual inspection of the refrigeration equipment components shall be conducted in accordance with TA-3410 and Mandatory Appendix TA-I, Subarticle TA-I-1400.		
	TA-4430	PRESSURE BOUNDARY TESTS		
829	TA-4431	*Leak Test, Refrigerant Piping and Coil (PL):* Refrigeration systems, including piping, coils, and pressure vessels, shall have a pressure test conducted to verify structural integrity and leak tightness. Testing shall be conducted in accordance with TA-3424 and Mandatory Appendix TA-VIII.		
830	TA-4432	*Hydrostatic Test, Hydronic Piping and Coils (HYD):* Hydronic piping, coils, and pressure vessels, shall have a hydrostatic test conducted to verify structural integrity and leak tightness. Testing shall be conducted in accordance with TA-3421.		
831	TA-4440	*Component Functional Tests:* The following component functional tests and prerequisites shall be conducted to verify that the refrigeration system equipment is operating acceptably prior to conducting the system functional tests specified in TA-4450. Fans shall be tested in accordance with TA-4100.		
832	TA-4441	*Electrical Prerequisites:* Prior to the initial energizing of the refrigeration system components, the electrical circuits shall be checked for installation, circuit continuity, voltage capacity, and protective relay device settings.		
833	TA-4442	*Control System Prerequisites:* Prior to the initial energizing of the refrigeration system components, the system controls shall be calibrated and verified operational.		
834	TA-4443	*Valve Position Indication Test (F):* Valves having remote position indicators shall be observed during valve full stroke operation to verify that the valve position corresponds to the remote indication.		
835	TA-4444	*Valve Exercise Test (F):* Power operated valves shall be fully cycled using a control switch or other actuating device to verify operation. Manual valves shall be fully cycled to verify operation.		
836	TA-4445	*Valve Timing Test (F):* Power operated valves that are required to operate within a specified time shall be tested by measuring the time to fully cycle.		
837	TA-4446	*Startup Prerequisites:* Correct direction of rotation shall be verified for compressor motors. Start the compressor motor, verify stable operation and monitor the compressor motor electrical supply voltage, amperage and phase balance, vibration, bearing temperatures, rotational speed, as applicable. Following one hour of operation, or immediately after observation of unusual performance (i.e., unstable operation), the equipment shall be secured and a detailed visual inspection conducted for signs of damage or degradation.		
838	TA-4450	*System Functional Tests:* The refrigeration equipment shall be tested to verify mechanical component integrity and design cooling function. TA-4451 through TA-4457 shall be conducted in the same time frame.		
839	TA-4451	*Flow Control Valve Test (F):* Power operated valves, controlled by flow instrumentation, shall be observed under throttled (throughout its anticipated operating range) flow conditions to verify freedom of movement, stable operation, and ability to maintain required flow.		
840	TA-4452	*Mechanical Run Test (F):* The refrigeration compressor shall be operated with the system in the normal heat load range for at least 15 minutes and stable system operation verified.		

Requirement Number	Source	Requirement Text	Verification/Validation R - Review A - Analysis T - Test I - Inspection	Design Document Reference (Where is this requirement incorporated in the design)
841	TA-4453	*Performance Test (F):* The refrigeration compressor inlet and outlet pressure and temperature shall be measured with the equipment operating at achievable load points.		
842	TA-4454	*Electrical Test (AMP):* The compressor motor electrical supply voltage and amperage shall be measured for each phase.		
843	TA-4455	*Rotational Speed Test (N):* The rotational speed of the compressor shall be measured when accessible.		
844	TA-4456	*Vibration Test (Vb):* The vibration of each accessible bearing on the compressor and compressor motor shall be measured in accordance with TA-3533.		
845	TA-4457	*Bearing Temperature Test (Tb):* Following compressor and compressor motor bearing temperature stabilization, the accessible bearing temperatures shall be measured. Stabilization occurs when temperature changes are less than or equal to +/-3 degrees F in a 10 minute period.		
	TA-4500	CONDITIONING EQUIPMENT ACCEPTANCE TESTS		
846	TA-4510	*Acceptance Test Requirements:* Acceptance tests shall be conducted with the conditioning equipment in service under normal operating conditions for the system. The tests listed in Table-TA-4000-5 shall be conducted and test results verified to be within the acceptance limits of the Owner's Design Specification, the applicable portions of Section CA of this Code, and as required in TA-3500 and TA-4570. These test results shall be documented in accordance with TA-6300 and shall be retained as reference values for comparison to periodic in-service test results.		
847	TA-4500	TABLE TA-4000-5 CONDITIONING EQUIPMENT ACCEPTANCE TESTS Test / Designator / Measure / Observe Visual inspection / VT / • / • Hydrostatic test / HYD / • / • Electric heater step controller test / F / • / • Electric heater coil resistance test / F / • / • Electric heater resistance to ground test / F / • / • Valve performance tests / F / • / • Performance test / F / • / • Electrical test / AMP / • / • Rotational speed test / N / • / • Vibration test / Vb / • / • Bearing temperature test / Tb / • / • Electric heater performance test / F / • / • Hydronic system flow balance / F / • / • Hydronic system heater and coil performance test / F / • / • Air washer, evaporative cooler performance test / F / • / •		
848	TA-4520	*Visual Inspection (VT):* A visual inspection of the conditioning equipment components shall be conducted in accordance with TA-3410 and Mandatory Appendix TA-I, Subarticle TA-I-1500.		
	TA-4530	PRESSURE BOUNDARY TESTS		
849	TA-4531	*Hydrostatic Test, Hydronic Piping and Coils (HYD):* Hydronic piping, coils, and pressure vessels, shall have a hydrostatic test conducted to verify structural integrity and leak tightness. Testing shall be conducted in accordance with TA-3521.		
850	TA-4540	*Component Functional Tests:* The following component functional tests and prerequisites shall be conducted to verify that the conditioning system equipment is operating acceptably prior to conducting the system functional tests specified in TA-4550. Fans shall be tested in accordance with TA-4100. Refrigeration components shall be tested in accordance with TA-4400.		
851	TA-4541	*Electrical Prerequisites:* Prior to the initial energizing of the conditioning system equipment, the electrical circuits shall be checked for installation, circuit continuity, voltage capacity, and protective relay device settings.		
852	TA-4542	*Control System Prerequisites:* Prior to the initial energizing of the conditioning system components, the system controls shall be calibrated and verified operational.		
853	TA-4543	*Electric Heater Step Controller Test (F):* Electric heater step controllers shall be tested by initiating a simulated demand signal to verify the heater circuit step controller is operational.		
854	TA-4544	*Electric Heater Coil Resistance Test (F):* The electrical resistance shall be measured across each heater circuit in accordance with CA-5440.		
855	TA-4545	*Electric Heater Resistance to Ground Test (F):* The electrical resistance to ground shall be measured on each heater circuit.		
856	TA-4546	*Valve Performance Tests (F):* Conditioning system valves shall be tested in accordance with TA-4443, TA-4444, and TA-4445.		

Requirement Number	Source	Requirement Text	Verification/Validation R - Review A - Analysis T - Test I - Inspection	Design Document Reference (Where is this requirement incorporated in the design)
857	TA-4547	*Startup Prerequisites:* Prior to starting the conditioning system pumps, the pump shaft shall be manually rotated to verify freedom of movement. The motor shall be momentarily energized to verify correct rotational direction. Restart the pump motor and verify stable operation and monitor the pump motor electrical supply voltage, amperage and phase balance, bearing vibration, bearing temperatures, rotational speed, pump differential pressure, and fluid system flowrate, as applicable. Following one hour of operation, or immediately after observation of unusual performance (i.e., unstable operation), the pump shall be secured and a detailed visual inspection for signs of damage or degradation shall be conducted.		
858	TA-4550	*System Functional Tests:* The conditioning equipment shall be tested in conjunction with the system to verify mechanical component integrity and design cooling or heating function. TA-4551 through TA-4556 shall be conducted in the same time frame.		
859	TA-4551	*Hydronic System Flow Balance Test (F):* A hydronic system flow balance shall be conducted. Recommended procedures include SMACNA, NEBB, or AABC (see Article TA-2000).		
860	TA-4552	*Flow Control Valve Test (F):* Power operated valves, controlled by flow instrumentation, shall be observed under throttled (throughout its anticipated operating range) flow conditions to verify freedom of movement, stable operation, and ability to maintain required flow.		
861	TA-4553	*Mechanical Run Test (F):* The conditioning system pumps shall be operated with the system in the normal operating range for at least 15 minutes and stable system operation (no surging) verified.		
862	TA-4554	*Performance Test (F):* The conditioning pump differential pressure and flow rate shall be measured with the pump operating at achievable flow rates.		
863	TA-4555	*Electrical Test (AMP):* The conditioning system pump supply voltage and amperage shall be measured for each phase.		
864	TA-4556	*Rotational Speed Test (N):* The rotational speed of the pump shall be measured.		
865	TA-4557	*Vibration Test (Vb):* The vibration of each bearing on the pump and motor shall be measured in accordance with TA-3433.		
866	TA-4558	*Bearing Temperature Test (Tb):* Following pump and motor bearing temperature stabilization, the bearing temperature shall be measured. Stabilization occurs when temperature changes are less than or equal to +/-3 degrees F in a 10 minute period.		
867	TA-4559	*Electric Heater Performance Test (F):* With design airflow (+/-10%) through the heater bank, the electrical supply voltage, amperage, and phase balance of each heater circuit, and differential temperature and air flow across the heater bank shall be measured. Following one hour of continuous operation, the heater shall be secured and a detailed visual inspection for signs of damage or degradation shall be conducted.		
868	TA-4560	*Hydronic System Heating and Cooling Performance Test (F):* With the conditioning system operating at design airflow (+/-10%) and design hydronic flow (+/-10%) and at achievable heat load conditions, the air-side flow, differential temperature and differential pressure, and the hydronic side flow, differential temperature and differential pressure shall be measured.		
869	TA-4561	*Air Washer, Evaporative Cooler Performance Test (F):* A performance test for the conditioning system air washers and evaporative coolers shall be conducted in accordance with CA-5000, Mandatory Appendix CA-II.		
870	TA-4570	*Acceptance Criteria:* The following acceptance criteria are in addition to TA-3600.		
871	TA-4571	*Electrical Heater Ground Resistance Acceptance Criteria:* Conditioning system electric heater resistance to ground shall be greater than 50,000 Ohms.		
	TA-4600	MOISTURE SEPARATOR, PRE-FILTER, HEPA FILTER BANK ACCEPTANCE TESTS		
872	TA-4610	*Acceptance Test Requirements:* Acceptance tests shall be conducted with clean moisture separator, pre-filter and HEPA filter banks installed in the system. The tests listed in Table-TA-4610 shall be conducted and test results verified to be within the acceptance limits of the Owner's Design Specification, the applicable portions of Sections FA, FB, and FC of this Code, and as required in TA-3600 and TA-4640. These test results shall be documented in accordance with TA-6300 and shall be retained as reference values for comparison to periodic in-service test results.		

Requirement Number	Source	Requirement Text	Verification/Validation R - Review A - Analysis T - Test I - Inspection	Design Document Reference (Where is this requirement incorporated in the design)
873	Table TA-4610	**TABLE TA-4000-6 MOISTURE SEPARATOR, PREFILTER, AND HEPA FILTER ACCEPTANCE TESTS** Test / Designator / Measure / Observe Visual inspection / VT / / • Differential pressure test / DP / • / Airflow distribution test / AD / • / Air-aerosol mixing test / AA / • / In-place leak test* / IP / • / *In-place leak tests are not required on systems used for 100% recirculation (e.g., reactor containment cleanup units) unless the atmospheric cleanup rate is time dependent.		
874	TA-4620	*Visual Inspection (VT):* A visual inspection of the installed moisture separator, pre-filter, and HEPA filter banks shall be conducted in accordance with TA-3410 and Mandatory Appendix TA-I, Subarticle TA-I-1600.		
	TA-4630	SYSTEM FUNCTIONAL TESTS		
875	TA-4631	*Differential Pressure Test (DP):* With the system operating at design flow rate (+/-10%) the differential pressure across each moisture separator, pre-filter, and HEPA filter bank shall be measured.		
876	TA-4632	*Airflow distribution Test (AD):* With the system operating at design flow rate (+/-10%) the airflow distribution shall be measured downstream of each moisture separator, pre-filter, and HEPA filter bank in accordance with Mandatory Appendix TA-IV.		
877	TA-4633	*Air-Aerosol Mixing Test (AA):* With the system operating at design flow rate (+/-10%) the air-aerosol mixing upstream of each HEPA filter bank shall be measured in accordance with Mandatory Appendix TA-V.		
878	TA-4634	*In-Place Leak Test (IP):* With the system operating at design flow rate (+/-10%) the challenge aerosol leak rate of each HEPA filter bank shall be measured in accordance with Mandatory Appendix TA-VI.		
879	TA-4640	*Acceptance Criteria:* The following acceptance criteria are in addition to TA-3600.		
880	TA-4641	*Airflow Distribution Test Acceptance Criteria:* With the system operating within +/-10% of design flow rate, the variation in velocity measurements across the HEPA filter banks shall be limited to +/-20% of the average, when measured in accordance with Mandatory Appendix TA-IV. Airflow distribution across the moisture separator and pre-filter banks shall be in accordance with the Owner's Design Specification.		
881	TA-4642	*Air-Aerosol Mixing Test Acceptance Criteria:* With the system operating within +/-10% of design flow rate, the variation in concentration of the air-aerosol mixture immediately upstream of the HEPA filter banks shall be limited to +/-20% of the average, when measured in accordance with Mandatory Appendix TA-V.		
	TA-4700	TYPE II AND TYPE III ADSORBER BANK ACCEPTANCE TESTS		
882	TA-4710	*Acceptance Test Requirements:* Acceptance tests shall be conducted with the adsorbent media installed and in service under normal operating conditions for the system. The tests listed in Table TA-4710 shall be conducted and test results verified to be within the acceptance limits of the Owner's Design Specification, the applicable portions of Sections FD and FE of this Code, and as required in TA-3600 and TA-4740. These test results shall be documented in accordance with TA-6300 and shall be retained as reference values for comparison to periodic in-service test results.		

Requirement Number	Source	Requirement Text	Verification/Validation R - Review A - Analysis T - Test I - Inspection	Design Document Reference (Where is this requirement incorporated in the design)
883	Table TA-4470	TABLE TA-4000-7 TYPE II AND TYPE III ADSORBER BANK ACCEPTANCE TESTS Test / Designator / Measure / Observe Visual inspection / VT / / • Differential pressure test / DP / • Airflow distribution test / AD / • Air-aerosol mixing test / AA / • In-place leak test* / IP / • Test canister flow rate test / QI / • Air heater performance test / F / • *In-place leak tests are not required on systems used for 100% recirculation (e.g., reactor containment cleanup units) unless the atmospheric cleanup rate is time dependent.		
884	TA-4720	*Visual Inspection (VT):* A visual inspection of the type I and type II adsorber banks shall be conducted in accordance with TA-3410 and Mandatory Appendix TA-I, Subarticle TA-I-1700.		
	TA-4730	COMPONENT FUNCTIONAL TESTS		
885	TA-4731	*Electric Heater Step Controller Test (F):* Electric heater step controllers shall be tested by initiating a simulated demand signal to verify the heater circuit step controller is operational.		
886	TA-4732	*Electric Heater Coil Resistance Test (F):* The electrical resistance shall be measured across each heater circuit in accordance with CA-5440.		
887	TA-4733	*Electric Heater Resistance to Ground Test (F):* The electrical resistance to ground shall be measured on each heater circuit.		
	TA-4740	SYSTEM FUNCTIONAL TESTS		
888	TA-4741	*Differential Pressure Test (DP):* With the system operating at design flow rate (+/-10%) the differential pressure across each adsorber bank shall be measured.		
889	TA-4742	*Airflow Distribution Test (AD):* With the system operating at design flow rate (+/-10%) the airflow distribution across each adsorber bank shall be measured in accordance with Mandatory Appendix TA-IV.		
890	TA-4743	*Air-Aerosol Mixing Test (AA):* With the system operating at design flow rate (+/-10%) the air-aerosol mixing immediately upstream of each adsorber bank shall be measured in accordance with Mandatory Appendix TA-V. This test is not required when it can be determined that the air-aerosol test conducted on a HEPA bank immediately upstream of the adsorber bank also provides equivalent challenge to the adsorber bank.		
891	TA-4744	*In-Place Leak Test (IP):* With the system operating at design flow rate (+/-10%) the challenge gas leak rate of each adsorber bank shall be measured in accordance with Mandatory Appendix TA-VII.		
892	TA-4745	*Test Canister Flow Rate Test (QI):* When the system is equipped with test canisters used for obtaining adsorbent samples for laboratory analysis, the velocity through each test canister shall be measured (or calculated from flow measurements) with the system operating at design airflow rate. Alternatively, when access is limited and measurements cannot be performed, the design documentation shall be verified to assure that the installed canisters meet the performance requirements, (differential pressure/flow rate), of canisters used during shop testing of the test canister sampling system.		
893	TA-4746	*Electric Heater Performance Test (F):* With design airflow (+/-10%) through the heater bank, the electrical supply voltage, amperage, and phase balance of each heater circuit, and differential temperature and air flow across the heater bank shall be measured. Leaving air temperature shall be monitored so that temperature limits are not challenged. Following one hour of continuous operation, the heater shall be secured and a detailed visual inspection for signs of damage or degradation shall be conducted.		
894	TA-4750	*Acceptance Criteria:* The following acceptance criteria are in addition to TA-3600.		
895	TA-4751	*Airflow Distribution Test Acceptance Criteria:* With the system operating within +/-10% of design flow rate, the variation in velocity measurements across the face of the adsorber banks shall be limited to +/-20% of the average, when measured in accordance with Mandatory Appendix TA-IV.		

Requirement Number	Source	Requirement Text	Verification/Validation R - Review A - Analysis T - Test I - Inspection	Design Document Reference (Where is this requirement incorporated in the design)
896	TA-4752	*Air-Aerosol Mixing Test Acceptance Criteria:* With the system operating within +/-10% of design flow rate, the variation in the challenge gas or aerosol concentration readings immediately upstream of each adsorber banks shall be limited to +/-20% of the average, when measured in accordance with Mandatory Appendix TA-V.		
897	TA-4753	*Test Canister flow Rate Test Acceptance Criteria:* The test canister velocity shall be within +/-10% of the average adsorber design velocity as specified by the Owner's Design Specification.		
898	TA-4754	*Electric Heater Performance Test Acceptance Criteria:* Operating currents, voltages and changes in temperature shall be within the limits of the Owner's Design Specification.		
	TA-4800	ADSORBENT ACCEPTANCE TESTS		
899	TA-4810	*Acceptance Test Requirements:* Verify that laboratory acceptance tests have been performed on a representative sample of adsorbent per FF-5000. Test results shall be documented in accordance with TA-6300 and shall be retained as reference values for comparison to periodic in-service test results.		
900	TA-4820	*Laboratory Analysis of Adsorbent (LAB):* New adsorbent installed in the adsorber banks shall be certified in accordance with the Manufacturer's test data for radioiodine penetration (see FF-5000). Adsorbent stored more than 50% of Manufacturer's assigned shelf life or 5 years per FF-5000 shall have a laboratory test conducted in accordance with ASTM D-3803-89 prior to installation.		
901	TA-4900	*Integrated System Tests:* Each system shall be tested to verify the functional performance at design operating conditions. Integrated system tests shall be conducted to challenge all integrated control functions including interlocks and manual or automatic actuation circuits, (damper position changes, fan starts and stops, compressor and pump starts or stops, valve position changes, heater energization or de-energization). Actuations can be from a number of different sources including radiation sensors, temperature sensors, chlorine sensors, pressure sensors, manual controls and emergency safeguard signals. Sensor operation shall be verified in addition to control circuitry. Integrated testing shall also include an overall system leak test to verify that there are no unacceptable bypasses of the HEPA filter or adsorber banks. Integrated system testing shall verify that the intended design function of the system is achieved in accordance with the Owner's Design Specification. Test results shall be documented in accordance with TA-6300.		
902	TA-4910	*Fan Integrated System Test Requirements (F):* Fans designed to respond automatically to a process or emergency actuation signal shall be tested. Sequencing of starts, stops and speed changes shall be conducted utilizing an actual or simulated actuation signal.		
903	TA-4920	*Damper Integrated System Test Requirements (F):* Dampers designed to respond automatically to a process or emergency actuation signal shall be tested. Sequencing of damper position changes shall be conducted utilizing an actual or simulated actuation signal.		
904	TA-4930	*Refrigeration and Conditioning Integrated System Test Requirements (F):* Refrigeration and conditioning equipment designed to respond automatically to a process or emergency actuation signal shall be tested. Sequencing of equipment operation (starts, stops, speed changes, valve operations or isolation, heater operation) shall be conducted utilizing an actual or simulated actuation signal.		
905	TA-4940	*HEPA and Adsorber Bank Integrated System Test Requirements (F):* All potential HEPA filter and adsorber bank bypass flow paths, including housing bypass ducts and associated dampers, shall be challenged to verify that leak rates are within the Owner's Design Specification. Bypass flow paths may be challenged during the in-place leak test specified in TA-4634 and TA-4744, by ensuring that the challenge aerosol or gas injection and sample ports encompass all potential bypass flow paths (see Mandatory Appendix TA-V, Subarticle TA-V-1100). If a potential bypass flow path within the system is not challenged during these in-place tests, a separate test shall be performed using Mandatory Appendix TA-VI or TA-VII to verify that the HEPA or adsorber banks are not being bypassed in excess of the limits specified in the Owner's Design Specification.		
	TA-5000	CORRECTIVE ACTION REQUIREMENTS		
906	TA-5000	Corrective action is required when test results do not meet the acceptance criteria specified in the applicable section or in the Owner's Design Specifications. For equipment that is replaced, modified, repaired, or has undergone maintenance, such that reference values may change, a new set of reference values shall be obtained in accordance with the requirements of Subarticle TA-3200. Additional guidance for corrective actions is included in Nonmandatory Appendix TA-B.		
	TA-6000	QUALITY ASSURANCE		
907	TA-6100	*General:* Field testing of nuclear air treatment, heating, ventilating, and air conditioning systems shall be conducted in accordance with the quality assurance requirements of Article AA-8000 and ANSI/ASME NQA-1.		

Requirement Number	Source	Requirement Text	Verification/Validation R - Review A - Analysis T - Test I - Inspection	Design Document Reference (Where is this requirement incorporated in the design)
908	TA-6200	*Personnel:* Tests shall be conducted by personnel who have demonstrated competence to perform the specified tests, as evidenced by documented experience and training. Personnel shall be certified in accordance with ANSI/ASME NQA-1 or ANS 3.1, and in accordance with the Owner's requirements.		
	TA-6300	DOCUMENTATION		
909	TA-6310	*Procedures:* Written acceptance test procedures shall document the field acceptance testing performed and test results obtained as specified in TA-4000. These records shall be maintained for the life of the facility.		
910	TA-6320	*Reports:* A written report shall be provided to document the acceptance testing performed in accordance with TA-4000. The report shall contain the following as a minimum: (a) the system name, test/inspection procedure(s) used, date of test results, and the test performer's signature; (b) identification of instruments, equipment, tools, and documents to the extent that they or their equivalents can be identified for future examinations; (c) observations and dimensional checks specified by the respective test data and reports developed during inspection and testing; (d) conclusions and recommendations by visual examination and testing personnel; (e) reference to previous reports if this report is for reinspection and testing.		
	Mandatory Appendix TA-I	VISUAL INSPECTION ITEMS		
911	TA-I-1000	*General:* A specific inspection checklist for each component in the system shall be included in the acceptance test procedures. This Appendix lists typical items for each component that need to be inspected visually in Article TA-4000 (Acceptance tests). As a minimum, the lists of items indicated below shall be checked for compliance with the Owner's Specifications. The inspection shall be conducted in accordance with TA-3410. The acceptance criteria for these inspections shall be in accordance with TA-3500 and TA-3510.		
912	TA-I-1100	*Fan Inspection Items:* (a) housing and duct interface (b) fan belt and shaft guards (c) interferences with moving parts (d) fan shaft seal (e) belt adjustment and condition (f) lubricant levels (g) supports and attachments (h) bolting and fasteners (i) instrumentation (j) electrical connections (k) control system components (l) pneumatic connections (m) as built configuration in accordance with design drawings (n) fan nameplate (o) provisions for assess for performing tests and maintenance		
913	TA-I-1200	*Damper Inspection Items:* (a) housing and duct interface (b) actuator linkage, motor, controller (c) interferences with moving parts (d) damper shaft seal (e) blade edge seals, damper seat (f) limit switches (g) supports and attachments (h) bolting and fasteners (i) instrumentation (j) electrical connections (k) pneumatic connections (l) as built configuration in accordance with design drawings (m) damper nameplate (n) provisions for assess for performing tests and maintenance		

Requirement Number	Source	Requirement Text	Verification/Validation R - Review A - Analysis T - Test I - Inspection	Design Document Reference (Where is this requirement incorporated in the design)
914	TA-I-1300	*Duct, Housing and Mounting Frame Inspection Items:* (a) housing and duct connections (no caulking) (b) provision for opening access doors from both inside and outside (c) access door seals, gaskets (d) access door latches (e) housing internal access ladders and platforms (f) sample and injection ports, location and caps (g) supports and attachments (h) bolting and fasteners (i) instrumentation, connections (j) electrical connections (k) housing/duct penetration seals (l) loop seals (water level), drain connections		
915	TA-I-1300	*Duct, Housing and Mounting Frame Inspection Items:* (m) lighting conduits, socket housing seals (flush mounted) (n) HEPA/adsorber mounting frame continuous seal welds (o) Mounting frame penetrations seal welded (p) Mounting frame seating surface (weld splatter, flatness, scratches) (q) Sample canister installation (r) Mounting frame clamping devices (s) as built configuration in accordance with design drawings (t) provisions for assess for performing tests and maintenance (u) lighting for test and maintenance available		
916	TA-I-1400	*Refrigeration Equipment Inspection Items:* (a) housing or duct interface with refrigeration equipment (b) fan, pump, compressor belt, and coupling guards (c) interferences with moving parts (d) belt adjustment and condition (e) fluid leaks (f) lubricant levels (g) supports and attachments (h) bolting and fasteners (i) instrumentation (j) electrical connections (k) control system and components (l) pneumatic connections and tubing (no crimping) (m) as built configuration in accordance with design drawings (n) fan, pump, and compressor nameplate (o) provisions for assess for performing tests and maintenance		
917	TA-I-1500	*Conditioning Equipment Inspection Items:* (a) housing or duct interface with conditioning equipment (b) belt and coupling guards (c) interferences with moving parts (d) belt tightness (e) fluid leaks (f) lubricant levels (g) supports and attachments (h) bolting and fasteners (i) instrumentation (j) electrical connections (k) control system and components (l) pneumatic connections and tubing (no crimping) (m) drains and spray nozzles not plugged (n) as built configuration in accordance with design drawings (o) fan, pump, and compressor nameplate (p) provisions for assess for performing tests and maintenance		

Requirement Number	Source	Requirement Text	Verification/Validation R - Review A - Analysis T - Test I - Inspection	Design Document Reference (Where is this requirement incorporated in the design)
918	TA-I-1600	*Moisture Separator Bank, Pre-filter Bank, HEPA Filter Bank Inspection Items:* (a) moisture separator media, frame, clamps, and gaskets (b) moisture separator water collection system and drains (c) pre-filter media, frame, clamps, and gaskets (d) HEPA filter media, frame, clamps, and gaskets (e) Sealant or caulking (none allowed) (f) Moisture separator, pre-filter, HEPA orientation (vertical) (g) bolting and fasteners (h) as built configuration in accordance with design drawings (i) HEPA filter nameplate (j) provisions for assess for performing tests and maintenance		
919	TA-I-1700	*Type II, Type III Adsorber Bank Inspection Items:* (a) type II media, frame, screen, clamps, and gaskets (b) sealant or caulking (none allowed) (c) type III media, screens, frame (d) test canisters (e) bulk loading equipment (f) fire protection system piping, nozzles, instrumentation (g) bolting and fasteners (h) as built configuration in accordance with design drawings (i) adsorber nameplate (j) provisions for assess for performing tests and maintenance		
	Mandatory Appendix TA-II	STRUCTURAL CAPABILITY TEST PROCEDURAL GUIDELINES		
920	TA-II-1000	*Summary of Method:* Ducts and housings which form the pressure boundary of the system shall be pressure tested, with air, to the structural capability pressure to verify that there is no breach of integrity or unacceptable distortion. Fans, dampers, and other components which form parts of the pressure boundary shall be installed and tested with the ducts and housings to verify the interface connection integrity.		
921	TA-II-2000	*Prerequisites:* Construction, modifications, or repairs affecting the test boundary shall be complete and inlet and discharge openings of the duct or housing sealed before the test is started. Electrical, piping, and instrument connections shall be complete and all permanent seals installed before the test is started.		
922	TA-II-3000	*Test Equipment:* (a) pressurization source (b) covers to seal test boundaries (c) pressure indicating device accurate to +/-0.1 in. w.g.		
923	TA-II-4000	*Procedural Guidelines:* (a) Connect the pressurization source to the duct or housing. (b) Install instrumentation to indicate the pressure inside the duct or housing being tested. (c) Start the pressurization source and operate until the structural capability pressure is achieved. Maintain pressure for the duration of the inspection. (d) Inspect the test boundary for breach of integrity or distortion. (e) Release pressure and inspect for permanent distortion.		
924	TA-II-5000	*Acceptance Criteria:* All distortion shall be measured and compared to the acceptance limits of the Owner's Design Specification.		
	Mandatory Appendix TA-III	DUCT AND HOUSING LEAK TEST PROCEDURAL GUIDELINES		
925	TA-III-1100	*Summary of Method:* Ducts and housings that form the pressure boundary of the system shall be leak tested, with air, using one of the methods listed in this procedure. Either method may be used and will produce a similar result. The constant pressure method is useful in testing small volumes whereas the pressure decay method is useful in testing large volumes. Fans, dampers, and other components that are part of the pressure boundary shall be installed and tested with the pressure boundary to verify interface connection leak tightness. If the measured leak rate is in excess of the acceptance criteria, the leaks shall be located by one of the methods listed in this procedure. After leaks are repaired, the duct and housing shall be re-tested to verify leak tightness.		

Requirement Number	Source	Requirement Text	Verification/Validation R - Review A - Analysis T - Test I - Inspection	Design Document Reference (Where is this requirement incorporated in the design)
926	TA-III-2000	*Prerequisites:* Construction, modifications, and repairs affecting the test boundary shall be complete and the inlet and discharge openings of the duct or housing sealed before the test is started. All electrical, piping, and instrument connections shall be complete and all permanent seals shall be installed before the test is started. For pressure decay testing, the volume of the pressure test boundary must be calculated.		
927	TA-III-3000	*Test Equipment:* (a) pressurization source (b) covers to seal test boundaries (c) clock or timer accurate to +/-1.0 second (d) pressure indicating device accurate to +/- 0.1 in. (e) flowmeter or totalizing gas volume meter accurate to +/-5% (constant pressure method) (f) temperature indicating device accurate to +/-0.5 degrees F (g) bubble solution for detecting air leaks (bubble method) (h) optional portable electronic sound detection equipment (audible leak method) (i) barometer		
	TA-III-4000	PROCEDURAL GUIDELINES		
928	TA-III-4100	*Constant Pressure Method:* (a) Connect the pressurization source to the duct or housing. (b). Connect the flowmeter or totalizing gas volume meter between the pressurization source and the housing (downstream of the throttling valve, if used). (c) Install temperature and pressure indicating devices so that they will indicate representative temperature and pressure inside the duct or housing being tested. (d) Seal test boundaries and close access doors in the normal manner. Do not use temporary sealants, duct tape, or similar temporary materials except for sealing the temporary blank-off panels. (e) Start the pressurization source and operate it until the maximum operating pressure is achieved. Maintain pressure constant with the flow control device until temperature remains constant within +0.5 deg F (0.25 deg C) for a minimum of 10 minutes. Record the initial stabilized pressure, temperature, and barometric pressure.		
929	TA-III-4100	*Constant Pressure Method:* (f) Measure the flow rate of the air being added to or removed from the duct or housing while maintaining the maximum operating pressure within +/-0.1 in. w.g. [0.025 Kpa(gage)]. When using the flow meter, record flow readings once a minute for a 5 minute continuous period and average the readings to calculate the measured leak rate. When using a totalizing gas volume meter, measure the total volume of air for a 10 minute continuous period and divide the measured volume by time (10 minutes) to calculate the measured leak rate. Record final pressure, temperature and barometric pressure. (g) Convert the final calculated leak rate to standard cubic feet per minute (cubic meters per second) in accordance with the method illustrated in ACGIH Industrial Ventilation A Manual of Recommended Practice.		
930	TA-III-4200	*Pressure Decay Test:* (a) Connect the pressurization source (with a leak tight shutoff valve) to the duct or housing. (b) Install the temperature and pressure indicating devices where they will indicate representative temperature and pressure inside the duct or housing being tested. (c) Seal test boundaries and close access doors in the normal manner. Do not use temporary sealants, duct tape, or similar temporary materials except for sealing the temporary blank-off panels. (d) Start the pressurization source and operate until the pressure is 1.25 times the maximum operating pressure (but not to exceed the structural capability pressure). Maintain this pressure constant with a flow control device until temperature remains constant within +/-0.5 deg F (0.25 deg C) for a minimum of 10 minutes. Close shutoff valve.		

Requirement Number	Source	Requirement Text	Verification/Validation R - Review A - Analysis T - Test I - Inspection	Design Document Reference (Where is this requirement incorporated in the design)
931	TA-III-4200	*Pressure Decay Test:* NOTE: If the structural capability pressure for the duct or housing is less than 1.25 times the maximum operating pressure, the final test pressure shall be calculated as follows to achieve an average test pressure equal to the maximum operating pressure: $P_f = 0.8(OP_{max}) + (1.25(OP_{max}) - SCP)$ where P_f = final test pressure OP_{max} = maximum operating pressure SCP = structural capability pressure (e) Record the initial time, pressure, temperature, and barometric pressure. (f) Record pressure readings once a minute until pressure decays to 80% of the maximum operating pressure, or for a minimum of 15 minutes (see NOTE in (d) above). (g) Record final time, pressure, temperature, and barometric pressure.		
932	TA-III-4200	Pressure Decay Test: (h) Calculate the leak rate from the following equation in English Units: $Q_{avo} = (P_i/T_i - P_f/T_f) * V / (R*\Delta t*0.075)$ Metric units: $Q_{avo} = (1.39 * 10^{-5}) * (P_i/T_i - P_f/T_f) * V / (R*\Delta t)$ where Q_{avo} = average leak rate, scfm (sm^3/s). [air density = 0.075 lb/ft^3 (1.2 Kgs/M^3)] V = volume within test boundary, ft^3 (m^3) P_i = initial pressure within test boundary, psf ABS [Pa(absolute)] P_f = final pressure within test boundary, psf ABS [Pa(absolute)] T_i = absolute temperature at start of test, R (K) T_f = absolute temperature at end of test, R (K) $\Delta t = t_i - t_f$ time difference (minutes) t_i = time at start of test (minutes) t_f = time at end of test (minutes) R = gas constant for air, 53.35 ft-lb, (0.286 kJ, lb-R, kg-K)		
933	TA-III-4300	*Acceptance Criteria:* If the calculated leak rate exceeds the Owner's acceptance criteria, locate leaks in accordance with one of the techniques outlined in III-4400 or III-4500.		
934	TA-III-4400	*Bubble Leak Location Method:* (a) Pressurize the test boundary to the maximum operating pressure for the system. (b) With the test boundary under continuous pressure, apply bubble solution to areas to be tested. Identify places where bubbles are found and perform corrective actions. (c) Following corrective actions, retest in accordance with III-4100 or III-4200.		
935	TA-III-4500	*Audible Leak Location Method:* (a) Pressurize the test boundary to the maximum operating pressure for the system. (b) With the test boundary continuously pressurized, locate audible leaks (electronic sound detection equipment optional) and perform corrective actions. (c) Following corrective action, retest in accordance with III-4100 or III-4200.		
	Mandatory Appendix TA-IV	AIRFLOW DISTRIBUTION TEST PROCEDURE GUIDELINES		
936	TA-IV-1100	*Summary of Method:* The system is operated at design flow rate. Airflow velocity readings are measured downstream of each moisture separator, pre-filter, and HEPA filter in the bank. For adsorbers, readings shall be taken in line with the flow slots. Each reading is compared to the average for the bank.		
937	TA-IV-2000	*Prerequisites:* System operating within +/-10% design flow rate.		

Requirement Number	Source	Requirement Text	Verification/Validation R - Review A - Analysis T - Test I - Inspection	Design Document Reference (Where is this requirement incorporated in the design)
938	TA-IV-4000	*Procedural Guidelines:* (a) For each moisture separator, prefilter, and HEPA filter, measure the air velocity at the approximate centers of equal areas with at least one measurement per each moisture separator, prefilter, and HEPA filter, and a minimum of 9 measurements per bank. Adsorber velocity measurements shall be made in the approximate center of the flow slots. For fow slots greater than 24 inches long (60 cm), measurements shall be nominally every 12 inches (30 cm) along the length of the slot. (b) Calculate the average velocity (V_{ave}) using the following formula: $V_{ave} = \Sigma V_i / n$ where ΣV_i = sum of individual velocity readings n = number of readings (c) Identify the highest and lowest velocity readings and calculate the percentage they vary from the average calculated above.		
	Mandatory Appendix TA-V	AIR-AEROSOL MIXING TEST PROCEDURE GUIDELINES		
	TA-V-1000	GENERAL		
939	TA-V-1100	*System Test:* Injection and sample port location shall be located so that the entire system, including housing bypass ducts and associated dampers, is challenged for inadvertent bypass flow paths around the HEPA filter or absorber banks. If this cannot be accomplished, and integrated system test shall be included in addition to the bank tests outlined in Mandatory Appendices TA-VI, TA-VII, and TA-4940.		
940	TA-V-1300	*Injection Port Selection Criteria:* Injection ports should be located upstream of a flow disturbance to maximize mixing. The challenge gas will pass through the HEPA bank and challenge the absorber bank. For systems with two or more HEPA filter banks in series, or two or more absorber banks in series, separate injection ports must be qualified for each bank. Use of injection manifolds may be necessary when there is insufficient room between banks to provide adequate mixing.		
941	TA-V-2000	*Prerequisites:* The system is operating within +/-10% of design flow rate. The airflow distribution has been verified in accordance with Mandatory Appendix TA-IV.		
942	TA-V-4000	*Procedural Guidelines:* (a) Connect challenge aerosol or gas generator to the injection port to be tested. (b) Place the challenge aerosol or gas measuring instrument sample probe upstream of the bank to be tested with adequate hose length to reach all areas of the bank. (c) Start the challenge aerosol or gas injection and establish a constant injection rate. (d) Take a concentration reading upstream of and at the approximate centers of equal areas, with at least one reading per HEPA filter and a minimum of 9 readings per HEPA bank. For type II and type III adsorbers, readings shall be taken upstream of and in the approximate center of each flow slot. For flow slots greater than 24 inches (60 cm) in length, a reading shall be taken nominally every 12 inches (30 cm) along the length of the slot.		
943	TA-V-4000	*Procedural Guidelines:* (e) Calculate the average concentration (C_{ave}) readings using the following formula: $C_{ave} = \Sigma C_i / n$ where ΣC_i = sum of individual velocity readings n = number of readings (f) Identify the highest and lowest concentration readings and calculate the percentage they vary from the average calculated above.		
	Mandatory Appendix TA-VI	HEPA FILTER BANK IN-PLACE LEAK TEST PROCEDURAL GUIDELINES		
944	TA-VI-2000	*Prerequisites:* Airflow distribution shall be verified in accordance with Appendix TA-IV. The injection port shall be qualified to provide uniform air-aerosol mixing in accordance with Mandatory Appendix TA-V.		

Requirement Number	Source	Requirement Text	Verification/Validation R - Review A - Analysis T - Test I - Inspection	Design Document Reference (Where is this requirement incorporated in the design)
945	TA-VI-4000	*Procedural Guidelines:* (a) Connect challenge aerosol generator to the qualified injection port. (b) Place the challenge aerosol measuring instrument sample probes upstream and downstream of the bank to be tested. The sample tubing shall be of equal bore and approximately equal lengths and as short as possible to minimize the measuring instrument response time. The upstream sample probe shall be located in approximately the center of the bank. The downstream sample probe shall be located in a downstream sample manifold or downstream of a mixing source such as a turbulent fan discharge. (c) Start the system and verify stable flow rate within ±10% of design flow rate. (d) Measure the upstream and downstream aerosol background concentration. The pre-injection background levels shall be stable to ensure correct instrument response and shall not interfere with the detector's ability to detect leaks in excess of the maximum allowed by the acceptance criteria.		
946	TA-VI-4000	*Procedural Guidelines:* (e) Start the challenge aerosol injection. (f) Record the upstream and downstream concentrations. Repeat until at least three of the readings are stable. (g) Stop the injection. (h) Using the final set of readings meeting the stability and tolerance criteria, calculate the bank leak rate using the formula below: $L = (100)C_d/C_u$ where L = % leak C_d = downstream concentration C_u = upstream concentration		
	Mandatory Appendix TA-VII	ADSORBER BANK IN-PLACE LEAK TEST PROCEDURAL GUIDELINES		
947	TA-VII-2000	*Prerequisites:* Airflow distribution shall be verified in accordance with Appendix TA-IV. The injection port shall be qualified to provide uniform air-aerosol mixing in accordance with Mandatory Appendix TA-V.		
948	TA-VII-4000	*Procedural Guidelines:* (a) Connect challenge gas generator to the qualified injection port. (b) Place the challenge gas measuring instrument sample probes upstream and downstream of the bank to be tested. The sample tubing shall be of equal bore and approximately equal lengths and as short as possible to minimize the measuring instrument response time. The upstream sample probe shall be located in approximately the center of the bank. The downstream sample probe shall be located in a downstream sample manifold or downstream of a mixing source such as a turbulent fan discharge. (c) Start the system and verify stable flow rate and within ±10% of design flow rate. (d) Measure the upstream and downstream challenge gas background concentration. The pre-injection background levels shall be stable to ensure correct instrument response and shall not interfere with the detector's ability to detect challenge gas leaks less than the maximum allowed by the acceptance criteria.		
949	TA-VII-4000	*Procedural Guidelines:* (e) Start the challenge gas injection. (f) Record the upstream and downstream concentrations, as rapidly as instrument response time allows, until sufficient data have been recorded to allow calculation of adsorber bank leak rate. Care must be taken to obtain sufficient readings quickly after injection. (g) Terminate challenge gas injection. (h) Using the upstream and downstream concentration data, calculate the adsorber bank leak rate using the formula below: $L = (100)C_d/C_u$ where L = % leak C_d = downstream concentration C_u = upstream concentration		
	Mandatory Appendix TA-VIII	REFRIGERANT PIPING AND COIL SYSTEM LEAK TEST PROCEDURAL GUIDELINES		
950	TA-VIII-2000	*Prerequisites:* (a) All flare, flange solder, braze, weld, or thread fittings mechanically tight. (b) All seals, packing glands, and service valve packing nuts mechanically tight. (c) All service, purge, and charging valves closed to the atmosphere. (d) Wire brush and wipe flux and oxides from all heated joints.		

Requirement Number	Source	Requirement Text	Verification/Validation R - Review A - Analysis T - Test I - Inspection	Design Document Reference (Where is this requirement incorporated in the design)
951	TA-VIII-4100	*Leak Test Procedural Guidelines:* (a) Open all interconnecting manual system valves, solenoid and expansion valves to ensure access to the complete system volume. CAUTION: Do not exceed the safe test pressure limits established by the unit manufacturer. NOTE: It is advantageous and less costly to use an inert gas (nitrogen or carbon dioxide) to back up the refrigerant vapor pressure. Only about 5% to 10% of the total mixture need be refrigerant vapor for this method to work. (b) Pressurize the entire system to the Manufacturer's recommended test pressure with the test mixture. NOTE: Allow time for the refrigerant and inert gas to mix before checking for leaks.		
952	TA-VIII-4100	*Leak Test Procedural Guidelines:* (c) Leak test the entire system, including factory joints, seals, and insulated lines with an electronic leak detector. Usually a one inch (2.5 cm) per second movement of the detector probe is sufficient to pick up leaks. Soap solution may also be used to locate leaks. (d) Mark or identify any leaks located. CAUTION: Use appropriate reclaim equipment to prevent release of refrigerant gas to the atmosphere. (e) Leak testing is complete when all leaks have been repaired and the system has been re-pressurized and retested to verify that there are no leaks.		
953	TA-VIII-4200	*Evacuation and Dehydration Procedure:* Evacuate and dehydrate after leak testing per VIII-4100. Proper evacuation and dehydration prove system tightness, expel non-condensables, and assure a dry system before charging with refrigerant.		
954	TA-VIII-4210	*Deep Vacuum Method:* (a) Vent all system pressure. CAUTION: Use appropriate reclaim equipment to prevent release of refrigerant gas to the atmosphere. (b) Connect a temporary connection between the system high and low pressure sides. Connect the vacuum pump, vacuum indicator, and refrigerant cylinder to the system. (c) Open the vacuum pump suction and start the evacuation. (d) When the system reaches less than 500 micrometers (Hg) absolute, it is isolated from the vacuum pump. (e) When the system holds 500 micrometer (Hg) absolute for at least 15 minutes, with the vacuum source isolated, the system is free of moisture and leaks and the vacuum should be released by charging with refrigerant.		
	I	SECTION I: PREPARATION OF TECHNICAL INQUIRIES TO THE COMMITTEE ON NUCLEAR AIR AND GAS TREATMENT		
955	I-2000	*Inquiry Format:* Inquiries shall be limited strictly to interpretations of the requirements or to the consideration of revisions to the present requirements on the basis of new data or technology. Inquiries shall include the following: (a) Scope: Preferably involve a single requirement or closely related requirements. An inquiry letter concerning unrelated subjects will be subdivided by the Committee, considered individually, and may be responded to individually. (b) Background: State purpose of inquiry, which would be either to obtain an interpretation of Code requirements or to propose consideration of a revision to the present requirements. Provide concisely the information needed for the Committee's understanding of the inquiry (with sketches as necessary), being sure to include references to the applicable Code Section, Division, edition, Addenda, paragraphs, figures, and tables.		
956	I-2000	*Inquiry Format:* (c) Inquiry Structure: State in a condensed and precise question format, omitting superfluous background information, and where appropriate, compose in such a way that "yes" or "no" (perhaps with provisos) would be an acceptable reply. This inquiry statement should be technically and editorially correct. Those inquiries which in the Committee's (or the ASME staff Secretary's) judgment are not clear will be returned to the sender for clarification and resubmittal. (d) Proposed Reply: State what it is believed that the Code requires. If in the inquirer's opinion a revision to the Code is needed, recommended wording should be provided. Additionally, the inquiry shall: (a) be submitted in typewritten form; however, legible, handwritten inquiries will be considered; (b) include name and mailing address of the inquirer; (c) be submitted to the following address: Secretary ASME Committee on Nuclear Air and Gas Treatment 345 East 47th Street New York, NY 10017		
	ASME N509 2002	NUCLEAR POWER PLAN AIR CLEANING UNITS AND COMPONENTS		
	3	TERMS AND DEFINITIONS		

Requirement Number	Source	Requirement Text	Verification/Validation R - Review A - Analysis T - Test I - Inspection	Design Document Reference (Where is this requirement incorporated in the design)
957	3	*Habitability Systems:* Habitability systems (as defined in ASME N509), must meet the requirements of 10 Code of Federal Regulation (CFR), Appendix A, general design criteria 4, 5, and 19.		
	4	FUNCTIONAL DESIGN		
958	4.1.a	*General:* Prefilters are required in air-cleaning units when design inlet particulate concentrations and particle size are such that the HEPA filter may be rendered ineffective prematurely. On other air-cleaning units prefilters are recommended only when it is desired to increase HEPA filter life.		
959	4.1.b	*General:* HEPA filters are required in all air-cleaning units when filtration of inlet particulate matter requires a minimum efficiency of 99.97% for particles equal to 0.3 micrometer in size.		
960	4.1.c	*General:* Adsorbers are required when air-cleaning units are designed for removal of adsorbable compounds.		
961	4.1.d	*General:* Moisture separators (demisters) are required when entrained water droplet concentration may be greater than 1 lb (0.45 kg) of water per 1,000 c h (1,700 m3/hr) of airflow.		
962	4.1.e	*General:* Heaters should be utilized for air-cleaning units with adsorbers exceeds 70% based upon the 1% percentile meteorological conditions (where applicable). For nuclear air treatment systems which are unaffected by outside air meteorological conditions, heaters should be utilized when an accident would result in an air-stream exceeding 70% relative humidity for more than 1 hr.		
963	4.1.f	*General:* When adsorbers are used in ESF air-cleaning units, provision shall be made for a postfilter to retain carbon fines. Postfilters should also be considered in non-ESF air-cleaning units discharging into occupied spaces where carbon fine carryover is not acceptable.		
964	4.2	*Design Parameters:* Values of the following design parameters shall be specified when invoking this standard and shall be used whenever referenced: a) volumetric air flow rate, acfm (m3/hr); 1) minimum flow rate; 2) maximum flow rate; 3) design flow rate; b) design pressures, in w.g.(Pa); 1) maximum operating pressure; 2) leak test pressure; 3) maximum design pressure; 4) structural capability pressure (usually determined by component designer)		
965	4.2	*Design Parameters:* c) pressure-time transient (if applicable), in. w.g./sec (Pa/sec); d) maximum and minimum gas temperature (F) and density, lb/ft3 (kg/m3); e) maximum inlet relative humidity (percent); f) entrained liquid water (mass flow rate), lb/min (kg/min); g) concentrations of specific contaminants in airstream; h) required decontamination factors for each contaminant; i) component radiation integrated life dose (rad) and maximum dose rate (rad/hr); j) maximum dirty filter pressure differential, in. w.g.(Pa);		
966	4.2	*Design Parameters:* k) structural loadings; l) duct and housing maximum permissible leak rate (scfm) (m^3/hr) and associated operating pressure, in. w.g.(Pa); m) environmental design conditions including temperature, pressure, and relative humidity; n) expected duration and environmental conditions of storage area; o) particle size distribution and quantity of aerosols and contaminants under normal and accident conditions (if known); p) safety classification (ESF or non-ESF); q) number of adsorber test canisters per adsorber bank; r) heater capacity, watts, voltage, temperature differential, if applicable.		

Requirement Number	Source	Requirement Text	Verification/Validation R - Review A - Analysis T - Test I - Inspection	Design Document Reference (Where is this requirement incorporated in the design)
967	4.3	*Size (Installed Capacity) of Air-Cleaning Unit:* The installed capacity cfm (m^3/hr) of the air cleaning unit shall be no greater than the limiting installed capacity of any bank of components contained in the air cleaning unit through which the airflow must pass. The installed capacity of any bank or stage of components shall not exceed the number of components in the bank times the rated capacity of the individual components. Test canisters shall not be included in determining the installed capacity of any bank or stage of adsorbers.		
968	4.4	*Environmental Design Conditions:* All parts and components of the air-cleaning unit shall be selected or designed to operate under the environmental conditions (temperature, relative humidity, pressure, radiation, etc.) specified in paragraph 4.2. Materials of construction and components shall be selected or treated to limit generation of combustibles and contaminants and to resist corrosion and degradation that would result in loss of function when exposed to the specified environmental conditions for the design life of the component. Environmental qualification requirements are contained in 10 CFR 50.49 and IEEE 323 and ASME AG1, Section AA and various specific ASME AG-1 Code sections.		
969	4.5	*Structural Load Requirements:* Engineered Safety Feature (ESF) systems and all of their components shall be shown, either by testing or by a mathematical technique, to remain functional under the structural loading specified in ASME AG-1, Article AA-4000 and various specific ASME AG-I Code sections.		
	4.6	Air-Cleaning Units and Components That Must Withstand Fan Peak Pressure		
970	4.6	The maximum design pressure shall be documented by calculation, including the basis for the condition, and included in procurement specifications for manufacturer's design.		
971	4.6(a)	Positive Pressure: Air-cleaning units and components including ducts located on the discharge side of fan(s) which can be isolated by closure of a downstream damper, or potentially plugged components, shall be designed to withstand a positive internal pressure equal to or greater than the peak pressure of the fan(s). If provision is made to deenergize fans on high differential pressure or low flow, the components shall be designed to withstand the trip point design pressure plus a margin to include the rate of pressure rise between reaching the pressure setpoint and the time for the instrumentation response, or 10%, whichever is greater.		
972	4.6 (b)	Negative Pressure. Air-cleaning units and components located on the inlet side of fan(s) which can be isolated by closure of an upstream damper, or potentially plugged components shall be designed to withstand a negative internal pressure equal to or more negative than the peak pressure of the fan(s). If provision is made to deenergize fan(s) on high differential pressure or low flow, the components shall be designed to withstand the trip point design pressure plus a margin to include the rate of pressure rise between reaching the pressure setpoint and the time for the instrumentation response, or 10%, whichever is greater.		
	4.7	NUCLEAR AIR TREATMENT SYSTEM CONFIGURATION AND LOCATION		
973	4.7	Physical location and arrangement of the components of a nuclear air-treatment system influence the requirements for leak tightness for the various parts of the pressure boundary. Air flow should be from potentially less contaminated areas to potentially more contaminated areas. Whenever possible, routing of contaminated air through clean spaces or interspaces should be avoided. If this can not be done, the general guidance in this Section should be followed. Figures B-1410-1,B-1410-2, and B-1410-3 of ASME AG-1, Section SA schematically depict examples of possible combinations and location of fan and air-cleaning unit to minimize impact of system contaminated outleakage on surrounding clean spaces and interspaces as well as contaminated inleakage into a cleaner system component.		
	4.7.1	EFFLUENT NUCLEAR AIR TREATMENT SYSTEM (ONE-THROUGH)		
974	4.7.1.a	Maintain ducts conveying contaminated air through cleanspaces or clean interspaces at a negative pressure with respect to the surrounding areas.		
975	4.7.1.b	With air-cleaning unit located in a clean interspace, exhaust fan shall be located downstream of air-cleaning unit in order to keep air-cleaning unit under negative pressure. Any leakage through fan shaft will be from clean interspace.		
976	4.7.1.c	With air-cleaning units located in contaminated spaces or interspaces, the fan shall be located upstream of the air-cleaning unit to prevent infiltration of contaminated air through fan shaft, or into the filter housing downstream of filters thereby bypassing filters.		
977	4.7.1.d	The length of positive pressure discharge ducts from the air-cleaning unit routed through clean spaces or interspaces should be kept as short as practical to minimize outleakage from ductwork from impacting inplant personnel exposure.		
	4.7.2	HABITABILITY SYSTEMS		
978	4.7.2.a	Outside air ducts routed through clean spaces or interspaces that may convey radioactive air following a release shall be under a negative pressure relative to the spaces.		
979	4.7.2.b	Negative pressure recirculating air ducts that pass outside the habitable space should be avoided or additional filtration provided.		
980	4.7.2.c	The makeup air fans shall be located: (1) upstream of air-cleaning unit if air-cleaning unit is in a contaminated space. (2) downstream of air-cleaning unit if air-cleaning unit is in a clean space.		
981	4.7.2.d	The length of positive pressure ducts outside of the habitable boundary should be kept as short as practical to reduce effect of duct leakage on ability to pressurize habitable boundary.		

Requirement Number	Source	Requirement Text	Verification/Validation R - Review A - Analysis T - Test I - Inspection	Design Document Reference (Where is this requirement incorporated in the design)
982	4.7.2.e	Recirculating system housings should be kept at a positive pressure if located outside habitable boundary in a contaminated space or interspace.		
	4.7.3	**Recirculating Nuclear Air-Treatment Systems**		
983	4.7.3.a	If an air-cleaning unit is located in a clean space or interspace outside of the space served, the fan should be located downstream of the air-cleaning unit.		
984	4.7.3.b	Fans may be either upstream or downstream of aircleaning units if located totally within the space served.		
985	4.7.3.c	The length of ductwork outside the space served should be kept as short as practical.		
	4.8	**MAINTAINABILITY CRITERIA**		
986	4.8.1	*Access for Service, Testing, and Inspection:* The air-cleaning unit shall be designed to keep radiation exposures during maintenance, testing, and inspection as low as reasonably achievable (ALARA). Some design features which contribute to keeping these exposures ALARA are the following.		
987	4.8.1.a	Man-entry air-cleaning units should be located at floor level or should be equipped with a permanent service gallery at least 4 ft (1.23 m) wide with permanent stairs or fixed ladders.		
988	4.8.1.b	Smaller air-cleaning units should be located at a height above the floor or work gallery level convenient for access, based on human factors and the design of the housing.		
989	4.8.1.c	The area in which the air-cleaning unit is located shall be served by a clear aisle wide enough to accommodate servicing of internal components and equipment.		
990	4.8.1.d	Sufficiently wide clear area adjacent to the housing door or hatch shall be provided to allow servicing the air-cleaning unit; a space of at least 4 ft wide x 7 ft (1.23m wide x 2.15 m) high is recommended. The clear work space may also serve as aisle space as long as it can be used while servicing the air-cleaning unit, or it may serve as the clear space for an adjacent air-cleaning unit.		
991	4.8.1.e	Clearance of 18 in. (0.46 m) is recommended above the housing for installation and inspection.		
992	4.8.1.f	Elevated work galleries servicing air-cleaning units shall be designed in accordance with Occupational Safety and Health Act (OSHA) requirements.		
993	4.8.1.g	Ducts that will have to be cleaned out periodically shall be equipped with low leakage access hatches at strategic points.		
994	4.8.2	Internal Space for Maintainance: For ease of maintenance, air-cleaning unit design should provide for a minimum of 3 ft (0.92 m) from mounting frame to mounting frame between banks of components. If components are to be replaced between mounting frames, the bank-to-bank dimension should be the maximum deflated length of component plus a minimum of 3 ft (0.92 m). The designer should consider susceptibility of permanently installed testing manifolds to damage in determination of maintenance space. An extra 3 ft (0.92 m) bank-to-bank spacing should be considered for testing manifold clearance when manifolds are pennanently installed.		
	4.9	**MONITORING OF OPERATIONAL VARIABLES**		
995		Instruments and Controls shall meet the requirements of ASME AG-1, Section IA.		
	4.10	**Adsorbent Cooling**		
996		Where heat of radioactive decay or heat of oxidation or both may be significant, means shall be provided to remove this heat from the adsorbent beds to limit temperatures to values below 300°F (149°C) to prevent significant iodine desorption. For this purpose, a minimum circulatory air flow shall be available for all operational modes of the air-cleaning unit and shall be based on the maximum possible radioactivity loading on the adsorbent beds. Water deluge systems are not acceptable for this purpose.		
	4.11	**FIRE PROTECTION**		
997	4.11.1	*General:* Nuclear air treatment systems shall be designed, fabricated, and installed so as to minimize the use of combustibles. Filter media, sealants, gaskets, and insulation shall meet the requirements of ASME AG-1.		
998	4.11.2	*Fire Detection:* When air-cleaning units are provided with adsorbers, a fire detection system shall be installed downstream of each carbon adsorber bank to detect either abnormally elevated temperature or products of combustion. The fire detection system shall be designed to be responsive to the unique features of the installation and application (e.g., low air velocity, stratification). A two-stage alarm shall be provided. The fire detection system shall operate an alarm (first stage) upon detection of temperature above a prearranged set-point and automatically trip fan(s) and isolate the air-cleaning unit. The second stage shall operate an alarm when a fire is detected. Documentation shall be provided to the owner which shows that the fire detection system is designed to be responsive to a fire within the carbon adsorber bed.		
999	4.11.3	*Fire Hazard Procedures.* Plant fire protection procedures should include requirements that upon firststage, high-temperature alarm, the plant fire brigade is dispatched to the area to take appropriate action.		

Requirement Number	Source	Requirement Text	Verification/Validation R - Review A - Analysis T - Test I - Inspection	Design Document Reference (Where is this requirement incorporated in the design)
1000	4.11.4	*Fire Hazard Analysis:* A fire hazard analysis shall be performed for all air-cleaning units and components in accordance with 10 Code of Federal Regulations (CFR) 50, Appendix R and National Fire Protection Agency (NFPA) 803, except that for adsorbers consideration shall be given to the type of carbon (or other media) utilized in adsorbers and the potential for fire.		
1001	4.11.5	*Fire Protection Systems.* Fire protection systems, when provided, may use water deluge, inert gases (e.g., halon, CO2) or other extinguishing agents as appropriate for the hazard and designed in accordance with all applicable NFPA standards.		
1002	4.11.6	*Water Deluge Systems:* Deluge nozzles should be permanently mounted within the housing and located to ensure that both deep-seated or surface fires can be extinguished. Nozzles shall be piped to an accessible location outside the housing and provided with redundant leak-tight isolation valves and a connection suitable for manual attachent to the plant's fire protection system. Permanently connected fire protection systems are not recommended, but may be used in lieu of manual hose connections.		
1003	4.11.7	*Actuation of Fire Protection Systems.* If the result of the fire hazard analysis requires that a fire protection system be provided for an air-cleaning unit, the fire protection system should be manually actuated. Automatic actuating water deluge systems are not recommended because spurious actuation of detection/automatic protection systems will significantly degrade adsorber capability and damage the adsorber.		
1004	4.11.8	*Permanently Connected Fire Protection System.* When air-cleaning units are provided with permanently connected fire protection systems, provisions shall be made to activate an alarm upon initiation of flow of extinguishing agent (e.g., water, halon, CO_2).		
1005	4.11.9	*Returning Air-Cleaning Unit to Service:* *If carbon does become wet, the wet carbon shall be removed from the adsorber to prevent structural damage to the adsorber due to chemical interaction. Before placing the air-cleaning unit back in service, the adsorber shall be thoroughly dried and visually inspected for corrosion damage. Dried carbon shall be laboratory tested per ASME AG-1, Section FF and adsorber leak testing shall be performed per ASME AG-1, Section TA.*		
1006	4.12	*Insulation:* Acoustic linings, thermal insulation, and similar materials shall not be applied to the inside of air treatment system ducts and housings. Materials applied to the outside of ducts and housings shall not prevent access to any bolted construction joint, door, access hatch, or instrument in the housing or ducts or result in penetrations through the pressure boundary which would result in exceeding allowable leakage rates in accordance with paragraph 4.14. of ASME N509.		
1007	4.13.a	*Testability:* To ensure that the testing requirements of this Standard can be met, sufficient permanently installed halide and DOP injection and sampling ports shall be provided to permit accurate testing in accordance with ASME AG-1, Section TA, here required for proper challenge agent mixing and/or sampling, multiple inlet or outlet distribution manifolds shall be provided to allow injection and sampling per ASME AG-1, Section TA.		
1008	4.13.b	*Testability:* Sufficient test cannisters or other means of obtaining samples (see Mandatory Appendix I) of used adsorbent shall be installed in the adsorber system to provide a representative determination of the response of the adsorbent to the service environment over the predicted life of the adsorbent. Test cannisters shall be installed in a location where they will be exposed to the same airflow conditions as the adsorbent in the system, shall have the same adsorbent bed-depth as the adsorbent in the system, and shall be filled with representative adsorbent from the same batch of adsorbent as that of the system. The quantity of test cannisters to be provided shall be based on the expected frequency of operation. For continuously operating systems, where laboratory testing of carbon is required every 720 hr of operation, a minimum of 18 test cannisters is recommended. For those systems where laboratory carbon testing is required once every 18 months, a minimum of 6 test cannisters is recommended. If the adsorber operation may vary		
1009	4.13.b	The type of test cannister design (including connection to adsorber bank) shall be qualified by the manufacturer. Any change in the cannister design or mounting to bank shall require a retest. The qualification test shall measure air velocity at the test cannister. Measured velocity shall be +/- 10% of adsorber bank design velocity. Tests on each production air-cleaning unit are not required.		
1010	4.13.c	*Testability:* Access shall be provided between banks of components in the air-cleaning unit housing to permit physical inspection of both sides of each bank. Components shall not be installed back-to-back on the same or opposite sides of the same mounting frame, or on adjacent mounting frame, or on adjacent mounting frames which are so close as not to permit adequate access space between banks.		
	4.14	PRESSURE BOUNDARY LEAKAGE		

Requirement Number	Source	Requirement Text	Verification/Validation R - Review A - Analysis T - Test I - Inspection	Design Document Reference (Where is this requirement incorporated in the design)
1011	4.14.1	*Maximum Allowable Leakage:* Maximum allowable leakage across the pressure boundary of any portion of a nuclear air-treatment system shall be based on health physics requirements. Leakage into or out of nuclear air treatment systems may affect: (a) control room habitability; (b) plant personnel exposure during normal plant operation due to contaminated outleakage in clean spaces or clean interspaces; (c) plant personnel exposure due to excessive system inleakage which prevents the nuclear air-treatment system from performing its design function in contaminated spaces or contaminated interspaces during plant normal, upset, or accident conditions; (d) offsite exposure during plant normal, upset, or accident conditions.		
1012	4.14.2	*Calculation of Allowable Leakage:* The system designer (Engineer) shall determine leakage criteria and allowable leakage to meet governing Codes, Standards, regulations, and plant-specific requirements for required portions of the nuclear air-treatment system pressure boundary (ducts, housing, dampers, fans, etc.). The basis for determining the leak rate, and coincident operating (static) pressure shall be documented and provided to the owner. Additional leakage criteria may be applied to the pressure boundary as determined by the owner to meet plant-specific ALARA programs and/or regulatory requirements. Additional leakage criteria can be found in nonmandatory Appendix SA-B of ASME AG-1, including examples of determining allowable leakage for typical installations.		
1013	4.14.3	*Leak Test Parameters:* Components shall be designed, fabricated, and installed to not exceed allowable leakage at specified operating pressure. See nonmandatory Appendix CA-B of ASME AG-1.		
	5	COMPONENTS		
1014	5.1	*HEPA Filters:* HEPA filters shall meet the requirements of ASME AG-1, Section FC.		
1015	5.2	*Tray-Type Bed and Deep Bed Adsorber Cells:* Tray-type and deep bed adsorber cells shall meet the requirements for Type II or Type III cells, respectively, of ASME AG-1, Sections FD, Type II Adsorbers, and FE, Type III Adsorbers; and shall be filled with an adsorbent which meets the requirements of ASME AG-1, Section FE.		
1016	5.3	*Prefilters and Post Filters:* Medium efficiency prefilters and postfilters shall meet the requirements of ACME AG-1, Section FB.		
1017	5.4	*Moisture Separators:* Moisture separators shall meet the requirements of ACME AG-1, Section FA.		
1018	5.5	*Air Heaters:* Heaters shall meet the requirements of ACME AG-1, Section CA		
1019	5.5.1	*Heater Stage:* The heater stage shall be sized on the basis of heat transfer calculations showing a capability of reducing the maximum expected relative humidity of the entering airstream mixture to approximately 70% in the housing space between the moisture separator or housing inlet (whichever is applicable) and the refilter stage, at the system design flow rate. The sensible heat produced by the heater stage shall not result in increasing air temperatures to more than 225°F. An overtemperature cutoff switch set at this value shall be provided. Manually reset overtemperature cutoff switches are not recommended for ESF air-cleaning units located in areas not accessible following a DBA.		
1020	5.5.2	*Drawings:* Drawings showing the details of construction, dimensions, dimensional tolerances, size and location of services (i.e., electrical connections) and method of installation of the air-cleaning unit heaters shall be furnished to the owner.		
1021	5.5.3	Heaters for ESF Systems: Heaters in ESF aircleaning units shall be qualified to meet the requirements of IEEE 323, IEEE 344, and ACME AG-1, Section CA.		
1022	5.5.4	*Documentation:* A report containing description and results of qualifications testing and the resistance, certification and serial number (s) of the air-cleaning unit heaters purchased shall be furnished to the owner. If small scale model tests are the bases of design, scaled-up calculations must be provided. Heat transfer calculations shall be submitted to the owner if requested.		
	5.6	FILTER HOUSING		
1023	5.6.1	*General Requirements:* Housing shall meet the requirements of ACME AG-1, Section HA.		
	5.7	FANS		
1024	5.7.1	Fans shall meet the requirements of ASME AG-1, Section BA.		

Requirement Number	Source	Requirement Text	Verification/Validation R - Review A - Analysis T - Test I - Inspection	Design Document Reference (Where is this requirement incorporated in the design)
1025	5.7.1	Fans shall be selected on the basis of detailed system pressure loss calculations, and shall be capable of producing the specified design flow rates. The system designer shall, in accordance with AMCA 201, prepare a system characteristic curve for design and limiting conditions under which the fans will be required to operate.		
1026	5.7.1	All resistances in the system, including clean and dirty component pressure drops (as well as test pressure differential), full-open and intermediate control damper positions, duct inlet losses, and losses in ducts, housing inlets and outlets, and fan inlets and outlets shall be considered in the estimate of the system characteristics. A set of constant speed fan performance curves, showing the static or total pressure, corresponding efficiency, capacity, and brake horsepower shall be obtained from the fan manufacturer for each fan configuration. Fan inlet and discharge configurations, or other system characteristics, that would adversely alter the published fan performance shall be avoided. Fan size shall be chosen after performing an analysis of the system characteristic and fan performance curves, considering all system factors including temperature, pressure, required airflow and, particularly for fans operating in post-accident primary containment atmospheres, density and viscosity of the air or air-steam-entrained water mixture.		
1027	5.7.1	Fan selection shall also allow for test conditions in accordance with ASME AG-1, Section TA. The system designer shall identify the maximum allowable differential pressure for each filter bank plus a margin to accommodate filter loading which may occur prior to the next surveillance (typically 25% of the coincident dirty filter differential pressure). The fan and system characteristic curves shall be included in the system documentation. The fan shall be selected to operate on the stable portion of its pressure curve under all operating conditions. Provision shall be made in the design to maintain stable operation under the design flows and varying pressure range. Inlet vanes, inlet/outlet damper modulation, variable speed fan control are acceptable alternatives.		
	5.8	FAN DRIVES		
1028		Fan drives shall meet the requirements of ACME AG-1, Section BA.		
1029	5.8.1	*Integral Horsepower Motors -- General:* Motors shall comply with and be tested and rated in accordance with applicable requirements of NEMA MG1, and IEEE 112A. Performance shall be verified by either test or certification as specified for each requirement. Rated service factor shall be a minimum of 1.0 unless specified otherwise.		
1030	5.8.1	Motors shall be sized to supply maximum mechanical load demand without exceeding the rated horsepower under all identified operating conditions and to produce the required torque and acceleration as required by the driven equipment under the most adverse voltage, frequency and conditions specified, and shall be designed for the starting sequence specified by the Engineer.		
1031	5.8.2	*Drives for ESF Systems:* Drives in Engineered Safety Feature (ESF) systems shall comply with Institute of Electrical and Electronic Engineers (IEEE) 323. In addition, drives of ESF systems located inside containment shall be qualified in accordance with IEEE 334. ESF fan drives shall be qualified in accordance with IEEE 344. Motor supports and hangers shall be designed to withstand all seismic and operating loads with the motor in its normal operating orientation without impairment of operating characteristics.		
	5.9	DAMPERS		
1032	5.9	Dampers shall meet the requirements of ASME AG-1, Section DA.		
	5.10	DUCTS		
1033	5.10	Ducts shall meet the requirement of ACME AG-1, Secction SA		
	6	PACKAGING, SHIPPING, RECEIVING, STORAGE AND HANDLING OF COMPONENTS		
1034	6	*Packaging, shipping, receiving, storage, and handling shall meet the requirements of ASME NQA-1; ASME AG-1, Article AA-7000, and various specific ASME AG-1 Code section.*		
	7	INSTALLATION AND ERECTION		
1035	7.1	*Drawings:* Complete air-cleaning system layout drawings showing the location of housing, ducts, fan dampers, and the other external components in each of three mutually perpendicular planes shall be prepared prior to the start of erection. Drawings shall show all connections, hangers, and anchors, the location and joint details for all welds, and the procedure specification for each weld. The layout drawings shall reference dimension and shop drawings of components, as applicable. Layout shall be checked for interferences with other items to be installed in the area, and conflicts shall be resolved before installation.		
1036	7.2	*Erection:* All ducts, housings, fans, dampers, hangers, anchors, and services (electrical, steam, drains, etc.) shall be installed in strict conformance with the layout drawings; deviations of more than the design tolerance from the location in any plane from the position shown in the drawings shall be approved by the system designer or other responsible Engineer, and shall be documented by "as-built drawings." Prefabricated duct subassemblies should be made as large as practicable to minimize field joints and field welding. Housings shall not be used to support other equipment of the facility for which it was not designed; field runs of pipe, duct, or conduit or other systems of the facility shall not be permitted to penetrate the housing. Internal components (filters, adsorbers, etc.) shall not be installed until immediately before the system is presented for testing, and shall not be removed from their cartons or crates until they are ready to be installed. The recommendations for handling and installation of HEPA filters given in ASME AG-I, Section FC shall be complied with.		