DRAWINGS AND DOCUMENTS
OPERATING UNIT GROUP 10 – APPENDIX 7.7
WTP DOCUMENTS APPLICABLE TO ALL AREAS
SPECIFICATIONS

The documents listed in the following table are incorporated by reference into this permit and are subject to the requirements set forth in Part I Standard Conditions, Part II General Facility Conditions, and Part III Operating Unit Group 10 Conditions. Upon request, copies of the documents can be viewed at the Nuclear Waste Program Resource Center located at 3100 Port of Benton Blvd., Richland, WA. Appointments for viewing can be scheduled by calling (509) 372-7950.

Drawing/Document Number	Description
24590-WTP-3PN-MVB2-00010, Rev 0	Specification Change Notice for Stiffening and Stabilizing the openings of Access Opening Repair Vessels
24590-WTP-3PN-MVB2-00011, Rev 0	Specification Change Notice for the Cutting Method for Access Opening
24590-WTP-3PS-AFPS-T0006, Rev 3	Engineering Specification for Field Applied Special Protective Coatings for Secondary Containment Areas
24590-WTP-3PS-G000-T0002, Rev 8	Engineering Specification for Positive Material Identification (PMI) for Shop Fabrication
24590-WTP-3PS-HD00-T0001, Rev 4	Engineering Specification for Maintenance Decontamination Equipment
24590-WTP-3PS-M000-TP001, Rev 0	Engineering Specification for Air Displacement Slurry Pumps
24590-WTP-3PS-MACS-T0004, Rev 6	Engineering Specification for Single Stage High Pressure Integrity Centrifugal Fans and Blowers (AG-1)
24590-WTP-3PS-MACS-T0005, Rev 0	Engineering Specification for High Integrity Centrifugal Blowers – Multi-Stage
24590-WTP-3PS-MCE0-TP002, Rev 2	Engineering Specification for Process Ejector /Eductor
24590-WTP-3PS-MEP0-T0001, Rev 0	Engineering Specification for Plate and Frame Heat Exchangers
24590-WTP-3PN-M000-00037	Specification Change Notice – Add Note, Contents of this Document are Dangerous Waste Permit Affecting
24590-WTP-3PN-MEP0-00001, Rev 0	Specification Change Notice – Engineering Specification for Plate and Frame Heat Exchangers
24590-WTP-SDDR-MS-10-00144	Supplier Deviation Disposition Request - Plate Thickness for HOP-HX-00002/4
24590-WTP-SDDR-MS-11-00308	Supplier Deviation Disposition Request - Lifting Lug Deviation for HOP-HX-00002 & HOP-HX-00004

24590-WTP-3PS-MES0-TP001, Rev 1	Engineering Specification for Shell and Tube Heat Exchanger
24590-WTP-3PS-MKE0-T0001, Rev 5	Engineering Specification for Wet Electrostatic Precipitators
24590-WTP-3PS-MKH0-T0002, Rev 4	Engineering Specification for Nuclear Grade High Efficiency Particulate Air (HEPA) Filters
24590-WTP-3PS-MPC0-T0002, Rev 3	Engineering Specification for General Centrifugal Pumps to Meet Requirements of ASME B73.1M-2001 and ASME B73.2M-2003 for Commercial (CM) Components
24590-WTP-3PS-MPC0-T0003, Rev 2	Engineering Specification for Sealless Centrifugal Pumps to Meet Requirements of API Standard 685,1st Ed, Quality Level Q
24590-WTP-3PS-MPC0-T0009, Rev 2	Engineering Specification for Vessel-Mounted Vertical Transfer Pumps – WTP HLW Facility
24590-WTP-3PS-MPPD-T0001, Rev 3	Engineering Specification for Air-Operated Diaphragm Pumps
24590-WTP-3PS-MPVS-TP001, Rev 1	Engineering Specification for Submersible Centrifugal Sump Pumps
24590-WTP-3PS-MTF5-T0001, Rev 0	Engineering Specification for Field-Erected Tanks Design and Fabrication
24590-WTP-3PS-MV00-T0001, Rev 4	Engineering Specification for Pressure Vessel Design and Fabrication
24590-WTP-3PS-MV00-T0002, Rev 3	Engineering Specification for Seismic Qualification Criteria for Pressure Vessels
24590-WTP-3PS-MV00-T0003, Rev 3	Engineering Specification for Pressure Vessel Fatigue Analysis
24590-WTP-3PS-MVB2-T0002, Rev. 1	Engineering Specification for Alteration and Repair of On Site Stamped ASME Code Vessels and Boilers for Subcontract
24590-WTP-3PS-MWK0-T0001, Rev 5	Engineering Specification for Activated Carbon Bed Adsorbers
24590-WTP-SDDR-MS-11-00169 (CCN 233566)	Flatness and Distortion Tolerances, LAW CBA Housings
24590-WTP-SDDR-MS-11-00173 (CCN 233566)	Use of Coated Crane Rail in Place of Hot Dipped Galvanized
24590-QL-MRA-MWK0-00001-T0009 (CCN 233572)	Carbon Bed Adsorber Engineering Specification Sample Port Clarification
24590-WTP-SDDR-MS-11-00187 (CCN 233573)	ASME Section VIII Reinforcing PAD Tell-Tale Holes
24590-WTP-SDDR-MS-11-00199 (CCN 233571)	LAW Carbon Bed Adsorber Process Piping Deviation; Welded Pipe
24590-WTP-SDDR-MS-11-00230 (CCN 233571)	LAW Carbon Bed Adsorber Use of Later Edition of ASTM Standards Referenced by ASME B31.3-1996

24590-WTP-SDDR-MS-11-00245 (CCN 233572)	LAW Carbon Bed Adsorber Standards Latest Issue at Time of Award Deviation
24590-WTP-3PS-MX00-T0001, Rev 6	Engineering Specification for Process Bulge Design and Fabrication
24590-WTP-3PS-PS02-T0001, Rev 10	Engineering Specification for Shop Fabrication of Piping
24590-WTP-3PS-PS02-T0003, Rev 9	Engineering Specification for Field Fabrication and Installation of Piping
24590-WTP-3PS-PX04-TP001, Rev 1	Engineering Specification for Shop Applied Fusion Bonded Epoxy Coating for Underground Carbon Steel Pipe
24590-WTP-3PN-PX04-00016	Specification Change Notice – Addition of UV Resistant Cover Requirements for UV Protection of FBE Coated Carbon Steel Piping for Storage
RESERVED	RESERVED

Source documents (which do not include a "P" in the last set of numbers, e.g. "-P0001," or "-TP001") should be used in conjunction with any document change notices issued against them.

We are currently transitioning from permit documents (which include a "P" in the last set of numbers) to source documents. At the end of the transition period, permit submittals will contain source documents and will be incorporated into the permit as described in Ecology Publication #07-05-006.

This page intentionally left blank.

R11777485

ISSUED BY
RPP-WTP PDC

RIVER PROTECTION PROJECT – WASTE TREATMENT PLANT

ENGINEERING SPECIFICATION
FOR
Field Applied Special Protective Coatings For Secondary Containment Areas

Please note that source, special nuclear, and byproduct materials, as defined in the Atomic Energy Act of 1954 (AEA) are regulated at the U. S. Department of Energy (DOE) facilities exclusively by DOE acting pursuant to its AEA authority. DOE asserts that pursuant to AEA, it has sole and exclusive responsibility and authority to regulate source, special nuclear, and byproduct materials at DOE-owned nuclear facilities. Information contained herein on radionuclides is provided for process description purposes only.

Content applicable to ALARA? ☒ Yes ☐ No

ADR No.	**Rev**
24590-WTP-ADR-CSA-02-001	3
24590-WTP-ADR-ENG-03-004	10

Specification changes retroactive? ☐ Yes ☒ No ☐ N/A (alpha revision or revision 0)

Quality Level

CM

DOE Contract No.
DE-AC27-01RV14136

REV	DATE	BY	CHECK	AUTHORIZATION	APPROVER
3	5/24/16	Mitchell Loff	Ambika Chakravartty	NA	Tom Erwin Julian Leam
2	9/2/10	EAH	LRL	LDK	JRB
1	3/16/09	TRC	LRL	LDK	JRB
0	11/10/03	TRC	LDK	JH	DTS

SPECIFICATION No. 24590-WTP-3PS-AFPS-T0006 **Rev** 3

Revision History

Revision	Reason for Revision	Q Specification Revision Only Margin Reduced?		CM Only
		YES	NO	N/A
0	Issued for Construction	N/A	N/A	N/A
1	Incorporate 24590-WTP-3PN-AFPS-00016 with modification to section 6.6.1 to read "All coating materials, thinners, solvent and cleaning materials used on SS shall be shown to have a low leachable halogens content that shall not exceed 200ppm, total sulfur content shall not exceed 400ppm sulfur. The total amounts of low melting point metals such us lead, zinc, copper, tin, antimony and mercury shall not exceed one (1) percent and mercury shall not exceed 50 ppm."; 24590-WTP-3PN-AFPS-00017 with modifications to section 6.2.1.5.2 to remove"regulated tanks", modify Appendix I note 2 to remove "or contain regulated tanks"; 24590-WTP-3PN-AFPS-00027; 24590-WTP-FC-C-)%-0120; 24590-WTP-FC-C-06-06-0068; Add section 2.1.1.1 to incorporate job mock ups; Change section 4.2 to read "Only materials that are prequalifiedin accrdance with Appendix B and the subcontractor has a current Appendix F shall be used"; Add to section 7.3.3.2 "Concrete shall be suitably roughened and textured using one of the specified methods of surface preparation during the coating system mock-ups performed and accepted by the CONTRACTOR."; Remove all section references on Appendix I Installation detail drawings; Add Appendix J to incorporate interface installation detail drawings; Delete Appendix D; Delete Appendix H.	☐	☐	☒
2	Incorporate 24590-WTP-FC-C-08-0535, 24590-WTP-FC-C-09-0102. Deleted all references to Appendix D throughout specification. Delete section 2.2.1. Added defunation for ALARA, ALARA areas, and Non-ALARA areas. Deleted term "Radiation Areas"; replaced with ALARA requirements." In section 3, updated codes codes and standards editions and added 24590-WTP-3PS-NW00-T002. In section 3.1.4, deleted 24590-WTP-GPP-SRAD-007 because it is not IFC. Clarified section 4.2. In section 4.3, added requirement for Subcontractor to submit latest MSDS. Inserted or corrected G321-E &-V category numbers in section 4.5 and 4.9. Modified section 6.4 to align with abrasive requirements in other coating specifications. In section 6.6.1, add "adhesive-backed tape or lebels" to list requiring testing for contact with stainless steel. In section 7.4.10, clarified acceptability requirment for drying time of coatings. In section 7.5.6, changed placeholder from "Later" to "Reserved for Fyture use". Added section 7.6. Reformatted secte readability. In section 8.3.1, added cross reference 8.1.6. In section 9.1.5, changed requirement for shelf life extension. Revised Appendix A. In Appendix C Table 1, added coating sustem code SW16-1, and changed SW16 to SW16-2. In Appendix C Table 2, added system code SW30 (SC-T5-P). Identified Appendix I Details as "No Scale".	☐	☐	☒
3	Extensive revision, reformatted completely, and revised items not identified. Section 4.5.2.1 modified to incorporate 24590-WTP-FC-C-16-0090 by design.	☐	☐	☒

Contents

1 Scope 1
1.1 Project Description and Location 1
1.2 Equipment, Material, and Services Required 1
1.3 Work by Others 2
1.4 Acronyms and Definitions 4
1.5 Safety/Quality Classifications 6
2 Applicable Documents 7
2.1 Codes and Standards 7
2.2 Reference Documents/Drawings 9
3 Materials 9
3.1 Coating Materials 9
3.2 Patching/Filler Materials 11
3.3 Abrasives 12
3.4 Prohibited Materials 13
4 Application 13
4.1 General 13
4.2 Pre-Surface Preparation 13
4.3 Surface Preparation 14
4.4 Coating Application 17
4.5 Remedial Work 18
5 Inspections 19
5.1 Personnel Qualifications 19
5.2 Field Coating Inspection 20
6 Storage, Handling, and Shipping 23
6.1 Coating Materials 23
6.2 Batch Information 24
7 Quality Assurance 25
7.1 General 25
8 Configuration Management 28
8.1 Design Changes Incorporated by Reference 28
9 Documentation and Submittals 28
9.1 Documentation 28
9.2 Submittals 28

Appendices

Appendix A Supplier Quality Assurance Program Requirements Data Sheet A-1

Appendix B WTP Project Special Protective Coating (SPC) Material Prequalification Requirements for Secondary Containment B-1

Appendix C Table 1 – Secondary Containment Coating Systems C-1

Appendix D Color Scheme D-1

Appendix E Coating Manufacturer's Product Identity Certification Record E-1

Appendix F Surface Preparation and Coating Inspection Form F-1

Appendix G Secondary Containment Installation Typical Details G-1

Appendix H Interface Installation Detail Drawing References H-1

1 Scope

1.1 Project Description and Location

The Hanford Tank Waste Treatment and Immobilization Plant (WTP) is a complex of radioactive waste treatment processing facilities designed and constructed by Bechtel National, Inc. for the Department of Energy (DOE). The Hanford Site tank waste will be pretreated and immobilized into stable glass form via vitrification. The WTP Facilities are located at the 200 East Area of the Hanford site near Richland, Washington.

1.2 Equipment, Material, and Services Required

This specification defines the minimum requirements for the material and coating systems, surface preparation, application, and inspection of special protective coatings (SPCs) to be field applied onto concrete and steel surfaces that have been identified as a secondary containment (SC) area. The coating systems for concrete and steel surfaces are identified in Appendix C, Secondary Containment Coating Systems, Table 2 of this specification. The CONTRACTOR shall identify the areas requiring SC coatings in the appropriate room finish schedule for each facility [i.e., Low-Activity Waste (LAW) Facility, High-Level Waste (HLW) Facility, Effluent Management Facility (EMF), Pretreatment Facility (PT Facility), Analytical Laboratory (Lab), and Balance of Facilities (BOF)].

1.2.1 Field Coating Work

Unless indicated elsewhere in the subcontract documents, the field coating work shall include the following:

1.2.1.1 Touch-up of shop or field coated carbon steel embeds prior to application of identified SC coating systems.

1.2.1.2 Surface preparation and application of the applicable coating system for concrete and steel surfaces. Corner coving on floor/wall, wall/wall corners, around concrete, steel embed attachments, grouted anchor bolts, and other items that create a corner or sharp transition in coating system direction.

1.2.1.3 Saw cutting and chipping concrete as required by applicable installation detail.

1.2.1.4 Surface preparation and application of a primer/sealer/barrier coat on shop coated steel embeds that have been determined unsuitable for the installation locations' exposure conditions in the SC enclosure area or incompatible with the specified SC coating system.

1.2.1.5 Finish color shall be as noted in Appendix D, Color Scheme 1.0.

1.2.2 Surfaces NOT to be coated:

1.2.2.1 Weld hold back areas on piping, hangers/supports, steel attachments, etc. in areas designated SC prior to coating shall be 4 inches for **field** welds.

1.2.2.2 Rubber or similar nonmetallic parts.

1.2.2.3 Non-ferrous metals unless otherwise specified by the CONTRACTOR.

1.2.2.4 Stainless steel surfaces unless specifically required by the CONTRACTOR (areas where stainless steel is welded to carbon steel, the coating overlap onto the stainless steel shall be at least 1 inch or as otherwise specified).

1.2.3 Safety

1.2.3.1 All surface preparation and coatings work shall comply with all applicable environmental and safety provisions, laws, regulations in local jurisdiction (e.g., county and state). Work being performed in the United Sates shall be in strict accordance with OSHA 29 CFR 1910, *Occupational Safety and Health Standards* for state and local safety and environmental requirements.

1.2.3.2 The SUBCONTRACTOR shall comply fully with OSHA Hazard Communication Standard 29CFR 1910. Safety data sheets (SDS) for all materials, including thinners and cleaning solvents, shall be obtained from the materials manufacturer and made available at the place of application for review.

1.2.3.3 The volatile organic compound (VOC) content of all materials shall comply with federal, state, local, and other regulatory requirements.

1.2.3.4 The SUBCONTRACTOR shall control safe working and environmental conditions employing items such as but not limited to barricades, masking/tarping, ventilation, dehumidification, and safety watches to provide safe quality work from surface preparation through application, curing, and inspection activities.

1.2.3.5 The SUBCONTRACTOR shall be responsible for proper disposal of liquid or solid waste generated during the work described herein (residual coating material, thinners, solvent, wipes, rags, etc.).

1.3 Work by Others

1.3.1 The SUBCONTRACTOR shall supply all personnel, coating materials, and equipment, including all personal protective equipment (PPE), safety, rigging/access (as required), masking protection, containment, environmental control/dehumidification/ventilation equipment, area covering to protect from direct sunlight and inclement weather, and all consumables. The SUBCONTRACTOR shall perform all pre-surface preparation, surface preparation, coating application, inspection, and documentation for all SPCs work.

1.3.1.1 The SUBCONTRACTOR shall perform a job mock-up for each coating system identified for installation. Special concrete walls and floors or a sample area of the facility shall be provided by the CONTRACTOR for the mock-ups. Each sample area shall be approximately 5' x 5' in size. The mock-up coating sample shall be applied in accordance with this specification and CONTRACTOR accepted procedures. Surface defects in the concrete shall be filled flush with the surface plane and shall result in a smooth, decontaminable finish when top-coated with the remainder of the coating system. The completed mock-up shall provide a surface finish acceptable to the CONTRACTOR. The accepted mock-up shall be used as a reference standard of quality for surface preparation and applied coating surface finish. At the CONTRACTOR's notification, the

SUBCONTRACTOR shall inspect all concrete surfaces scheduled for coatings to ensure they are suitable for performing the specified surface preparation and coating application. Within 72 hours of notification, the SUBCONTRACTOR shall notify the CONTRACTOR in writing of items found to be damaged or otherwise unsuitable for surface preparation or coating application.

1.3.2 The SUBCONTRACTOR shall provide surface preparation of overlap or tie-in areas on stainless steel, concrete, and carbon steel surfaces as required.

1.3.3 The SUBCONTRACTOR shall install flexible joint sealant, flexible epoxy filler material, foam backer rod, bond breaker tape, and material where specifically identified for use by the CONTRACTOR.

1.3.4 The SUBCONTRACTOR shall store all coating materials in accordance with this specification and CONTRACTOR accepted procedures. The coating system and associated coating materials shall be in accordance with Appendix C, Table 1, Secondary Containment Coating Systems, Table 2, Secondary Containment Coating Materials or as otherwise identified by the CONTRACTOR. All coating materials shall be used on a first-in first-out basis, in which the oldest batch of any given material or component is used before batches with a later expiration date.

1.3.5 The SUBCONTRACTOR shall perform all inspections and tests contained in this specification prior to acceptance by the CONTRACTOR.

1.3.6 The SUBCONTRACTOR shall provide application and inspection documentation for all coating work accepted by the CONTRACTOR.

1.3.7 The SUBCONTRACTOR shall provide marking materials that are fully compatible with the coating system(s) specified. Marking materials shall be suitable for use on stainless steel.

1.3.8 The SUBCONTRACTOR shall provide environmental control equipment as necessary for surface preparation, coating application, and curing.

1.3.9 The SUBCONTRACTOR shall only use inspection equipment that is currently calibrated and controlled by a calibration program accepted by the CONTRACTOR.

1.3.10 The SUBCONTRACTOR shall coordinate all field coating work with the Contractor prior to starting work on a daily basis.

1.3.11 The SUBCONTRACTOR shall give the CONTRACTOR at least 24 hours' verbal notice for all agreed upon inspection witness and hold points.

1.3.12 The CONTRACTOR shall ensure that approval from the Washington State Department of Ecology has been received for each Secondary Containment Dangerous Waste Permit (DWP) area to receive SPCs in accordance with this specification prior to providing the SUBCONTRACTOR approval to install coatings.

1.4 Acronyms and Definitions

1.4.1 Acronyms

ALARA	As Low As Reasonably Achieveable
ANSI	American National Standards Institute
ASTM	American Society for Testing and Materials
BOF	Balance of Facilities
DFT	dry film thickness
DOE	US Department of Energy
DWP	Dangerous Waste Permit
ECF	epoxy concrete floors
ECW	epoxy concrete walls
EMF	Effluent Management Facility
ESE	epoxy steel embeds
HLW	high-level waste
Lab	Analytical Laboratory
LAW	low-level waste
MSDS	material safety data sheet
NCF	epoxy Novalac concrete floors
NCW	epoxy Novalac concrete walls
NFPA	National Fire Protection Association
NIST	National Institute of Standards and Technology
QA	Quality Assurance
QAP	Quality Assurance Program
SC	secondary containment
SDDR	supplier deviation dispostion request
SPC	special protective coatings
SSPC	Society for Protective Coatings
VOC	volatile organic compounds
WAC	Washington Administrative Code
WFT	wet film thickness
WTP	Waste Treatment and Immobilization Project

1.4.2 Definitions

1.4.2.1 ALARA areas – The designation used to identify the "Work Area" where personnel exposure to radiation and radioactive materials is managed and controlled at levels As Low As Reasonably Achievable (ALARA) by employing Special Protective Coatings (SPCs) to facilitate decontamination. Typically, this includes C2 areas floors, C3 and occupied C5 areas (floors, walls, ceilings and various commodities) up to 7.5 feet above the floor finish or platform and reachable surfaces within 40 inches of the "Work Area".

1.4.2.2 Batch – A quantity of coating made in one production run. A unique batch number is assigned for each production run of the epoxy coating material, the curing agent, fillers, and the thinner.

1.4.2.3 Bug holes – Small regular or irregular cavities resulting from entrapment of air bubbles in the surface of formed concrete during placement and consolidation.

1.4.2.4 CONTRACTOR – Means BECHTEL NATIONAL, INC. (BNI) and all of its authorized representatives acting in their professional capacities.

1.4.2.5 Curing membrane – Materials applied to prevent the moisture in uncured concrete from evaporating too rapidly. Where special protective coatings (SPCs) are being applied, the curing membranes or compounds should not contain paraffin, oil, silicone, or other contamination that could compromise proper coating adhesion.

1.4.2.6 Dry film thickness (DFT) – The thickness of an applied coating, once dry or cured. Usually expressed in mils (each mil is 1/1000 of an inch). Measured using a wet film thickness (WFT) gage and calculating DFT based on coating material volume solids. Alternatively measured using an ultrasonic DFT device or using a destructive test that cuts the dry film and optically measures the DFT.

1.4.2.7 Efflorescence – A white crystalline or powdery deposit on the surface of concrete. Efflorescence results from leaching of lime or calcium hydroxide out of the permeable concrete mass over time by water, followed by reaction with carbon dioxide and acidic pollutants.

1.4.2.8 Fish eyes (cratering) – Formation of holes or visible depressions in the coating film caused by a foreign particle on the substrate prior to coating application.

1.4.2.9 Form release agents – Compounds such as glossy paint or other film forming release material applied to forms to allow easy removal of forms. Where special protective coatings (SPCs) are being applied, the form release agent should not impart a residue of paraffin, oil, silicone, or other contaminant onto the surface that could compromise proper coating adhesion.

1.4.2.10 Holiday – A pinhole, skip, discontinuity, or void in the applied coating film.

1.4.2.11 Hydration – The reaction of water with the calcium silicate, aluminate, or aluminoferrite components of fine cement grains, necessary for the setting and densifying of concrete. Hydration results in the formation of calcium hydroxide and colloidal gels, which occupy a larger volume than the original cement.

1.4.2.12 Hydrostatic pressure – The pressure exerted by water at rest.

1.4.2.13 Item – An all-inclusive term used in place of any of the following: appurtenance, assembly, component, equipment, material, module, part, structure, sub-assembly, sub-system, system, unit, or support systems.

1.4.2.14 Laitance – A thin, weak, brittle layer of cement and aggregate fines in a concrete surface. The amount of laitance is influenced by the degree of working or amount of water in the concrete. For the application of special protective coatings (SPCs) all laitance must be removed to sound, dense concrete.

1.4.2.15 Mfg. std. coating – A manufacturer's standard coatings system applied to off-the-shelf items or standard line items of routine manufacture that are not specifically manufactured for the WTP Project.

1.4.2.16 NIST – National Institute of Standards and Technology.

1.4.2.17 Non-ALARA areas – The designation for areas outside of the defined "Work Area" where the potential for personnel to come in contact with radioactive material is low. This includes all C2 walls, all C1 areas and all other areas that do not have a contamination class designation.

1.4.2.18 Outgassing – The upward and outward emission of air or moisture vapor from concrete or coatings.

1.4.2.19 Pinhole – Minute hole visible in the applied coating without magnification, that appear to penetrate one or more layers of the coating film.

1.4.2.20 Profile – The surface roughness resulting from surface preparation by abrasive blasting or other CONTRACTOR accepted methods (Refer to Section 4.3.4.3).

1.4.2.21 Sag – The running of freshly applied coating on a vertical surface due to being applied too thick (same definition for runs and drips).

1.4.2.22 SUBCONTRACTOR – Means the company, corporation, partnership, individual, or other entity to which this subcontract (purchase order/material requisition) is issued, its authorized representatives, successors, and permitted assigns.

1.4.2.23 Supplier deviation disposition report (SDDR) – A standard WTP Project document that can be used by a vendor or SUBCONTRACTOR to identify an actual or potential deviation or discrepancy that requires engineering evaluation and disposition prior to acceptance.

1.4.2.24 Surface hardeners – Compounds applied to a concrete surface to improve hardness, and to decrease permeability.

1.4.2.25 Surface porosity – Permeability of the surface that allows absorption of vapors, moisture, chemicals, and coating liquids. Small interconnected voids that allow fluids to penetrate an otherwise impervious material.

1.4.2.26 Training and certification – Training to include an understanding of the specification, CONTRACTOR accepted work procedures, and manufacturer's published instructions. Certification to include a documented performance test demonstrating quality work acceptable to the CONTRACTOR (Refer to Sections 4.1.2, 7.1.5.1, 7.1.5.2, 9.2.5, and Appendix A, Supplied Quality Assurance Program Requirements Data Sheet).

1.5 Safety/Quality Classifications

All SPCs are designated as commercial grade and non-safety. The SPC quality program requirements must comply with DOE Order 414.1C as identified in Appendix A. The full order is not applicable (also refer to Section 5). The **NQA-1 Quality Assurance requirements do not apply to the manufacture or application of SPCs.** However, SPCs used in high radiation areas (>2E8 rads over 40 years) shall be prequalified in accordance with Appendix B, WTP Project Special Protective Coating (SPC) Material Prequalification Requirements for Secondary Containment.

2 Applicable Documents

The latest applicable edition of the following codes, standards, specifications, or WTP procedures form a part of this specification.

2.1 Codes and Standards

2.1.1 American Society for Testing and Materials (ASTM)

ASTM D412-98, R02, 06, R08	*Standard Test Methods for Vulcanized Rubber and Thermoplastic Elastomers-Tension*
ASTM D1653-93, R99, 03, R08	*Standard Test Methods for Water Vapor Transmission for Organic Coating Films*
ASTM D3276-00, 05, 07	*Standard Guide for Painting Inspectors (Concrete and Masonry Substrates)*
ASTM D3912-95, 01	*Standard Test Method for Chemical Resistance of Coatings Used in Light-Water Nuclear Power Plants*
ASTM D4060-01, 07	*Standard Test Method for Abrasion Resistance of Organic Coatings by the Taber Abraser*
ASTM D4082-02	*Standard Test Method for Effects of Gamma Radiation on Coatings for Use in Light-Water Nuclear Power Plants*
ASTM D4138-94, R01, 07	*Test Method for Measurement of Dry Film Thickness of Protective Coating Systems by Destructive Means*
ASTM D4227-99, R05, 05	*Practice for Qualification of Journeyman Painters for Application of Coatings to Concrete Surfaces of Safety Related Areas in Nuclear Facilities*
ASTM D4228-99, R05, 05	*Practice for Qualification of Journeyman Painters for Application of Coatings to Steel Surfaces of Safety Related Areas in Nuclear Facilities*
ASTM D4258-83, R05, 05	*Practice for Surface Cleaning of Concrete for Coating*
ASTM D4259-88, R06	*Standard Practice for Abrading Concrete*
ASTM D4262-83, R05, 05	*Standard Test Method for pH for Chemically Cleaned or Etched Concrete Surfaces*
ASTM D4263-83, R05	*Test Method for Indicating Moisture in Concrete by the Plastic Sheet Method*
ASTM D4285-83, R06	*Test Method for Indicating Oil or Water in Compressed Air*
ASTM D4414-95, R07	*Practice for Measurement of Wet Film Thickness of Organic Coatings by Notch Gages*

ASTM D4417-93, R99, 03	*Field Measurement of Surface Profile of Blast Cleaned Steel*
ASTM D4537-91, R96, 04	*Standard Guide for Establishing Procedures to Qualify and Certify Inspection Personnel for Coating Work Inspectors In Nuclear Facilities*
ASTM D4541-02	*Standard Test Method for Pull-Off Strength of Coatings Using Portable Adhesion Testers*
ASTM D4940-98, R03	*Test for Conductimetric Analysis of Water Soluble Ionic Contaminants of Blasting Abrasives*
ASTM D5139-90, R01	*Standard Specification for Sample Preparation for Qualification Testing of Coatings Used in Nuclear Power Plants*
ASTM D5144-00	*Standard Guide for Use of Protective Coating Standards In Nuclear Power Plants*
ASTM D5498-01	*Standard Guide for Developing a Training Program for Coating Work Inspectors in Nuclear Facilities*
ASTM D6132-97, 04, 08	*Standard Test Method for Nondestructive Measurement of Dry Film Thickness of Applied Organic Coatings Over Concrete Using an Ultrasonic Gage*
ASTM D6237-98, 03	*Standard Guide for Painting Inspectors (Concrete and Masonry Substrates)*
ASTM E337-02, R07	*Test for Relative Humidity by Wet-and-Dry Bulb Psychrometer*

2.1.2 The Society for Protective Coatings (SSPC)

SSPC-AB1-91, R04, R07	*Mineral and Slag Abrasive*
SSPC-PA2-94, 04	*Measurement of Dry Paint Thickness with Magnetic Gages*
SSPC-SP1-82, R04	*Solvent Cleaning*
SPC-SP6-00, 07	*Commercial Blast Cleaning*
SSPC-SP7-00, 07	*Brush-Off Blast Cleaning*
SSPC-SP10-00, 07	*Near-White Metal Blast Cleaning*
SSPC-SP11-87, R04	*Power Tool Cleaning to Bare Metal*
SSPC-SP12-95, 02	*Surface Preparation and Cleaning of Metals by Waterjetting Prior to Recoating*
SSPC-SP13-97, R03	*Surface Preparation of Concrete*
SSPC-VIS1-02, R04	*Visual Standard for Abrasive Blast Clean Steel*
SSPC-VIS3-93, 04	*Visual Standard for Power and Hand Tool Cleaning*

2.1.3 Occupational Safety and Health Administration (OSHA)

OSHA 29 CFR 1910	*Occupational Safety and Health Standards*

2.1.4 National Fire Protection Association (NFPA)

NFPA 801 – 2003	*Standard for Fire Protection for Facilities Handling Radioactive Materials*

2.1.5 Department of Energy (DOE)

DOE Std. 1066-97	*DOE Standard, Fire Protection Design Criteria*
DOE Order 414.1C Change 1 Issued 6/17/07	*Quality Assurance*

2.2 Reference Documents/Drawings

2.2.1 WTP Project Documents

24590-WTP-3PS-AFPP-T0001	*Painting (Professional Line Products) 09912*
24590-WTP-3PS-AFPS-T0002	*Special Protective Coating Limited-Combustible Testing Protocol*
24590-WTP-3PS-AFPS-T0003	*Field Applied Special Protective Coating for Steel Items and Equipment*
24590-WTP-3PS-AFPS-T0004	*Field Applied Special Protective Coatings for Concrete Surfaces*
24590-WTP-3PS-PX04-T0001	*Shop Applied Fusion Bonded Epoxy Coating for Underground Carbon Steel Pipe*
24590-WTP-GPP-SRAD-007	*Classification of Areas*

3 Materials

3.1 Coating Materials

3.1.1 All SPC SC materials prequalified and approved for use on the WTP Project can be found in Table 2 of Appendix C. Appendix C contains the generic coating systems and approved coating materials. The generic coating systems (primarily Epoxy or Epoxy Novolac materials) used on concrete and steel in SC areas shall be coordinated with the generic coating materials indicated in the Architectural Room Finish Schedules for the LAW, HLW, EMF, PTF, Lab, and select areas of BOF and their physical location. The Architectural Room Finish Schedules will identify coating materials for SC based on evaluation of chemical exposure, temperature, and mechanical abuse based on a case-by-case criteria and specifically tailored for the conditions/exposure that is to be expected.

3.1.1.1 All SPC SC materials applied to concrete or steel items located in ALARA areas are prequalified and approved for use in accordance with Appendix B. All SPCs applied to the building structure in ALARA areas or in any of the process buildings shall employ approved coating materials as defined in Appendix B.

3.1.1.2 Coating materials – including the primer, intermediate, and finish coat on a given item – shall be from the same manufacturer.

3.1.1.3 Secondary containment repair materials shall either be the same as the initial application, be recommended by the manufacturer, or be shown compatible with the original coating and acceptable to the CONTRACTOR. Repair materials shall be in pre-measured units, and only complete kits shall be mixed. Splitting or breaking down pre-measured units of multi-component coating materials may be considered if the SUBCONTRACTOR prepares a procedure that requires accurate measurement of all materials, and the SUBCONTRACTOR's quality control (QC) inspector monitors/verifies each and every mix. This procedure must be submitted to the CONTRACTOR for review and permission to proceed.

3.1.1.4 Project color requirements are found in Appendix D.

3.1.2 The volatile organic compound (VOC) content of all materials shall comply with federal, state, local, or other regulatory requirements that have jurisdiction. The maximum allowable VOC for this Project is 3.8 lbs/gal (450 g/liter).

3.1.3 Coating Over Stainless Steel

3.1.3.1 All coating materials, thinners, solvents, and cleaning materials used on stainless steel shall be shown to comply with the following requirements:

- Leachable halogen content shall not exceed 200 ppm
- Total sulfur content shall not exceed 400 ppm
- Total low melting point metals (such as lead, zinc, copper, tin, antimony, and mercury) shall not exceed 1%. Of this, mercury shall not exceed 50 ppm. These low melting point metals shall not be intentionally added during the manufacture of the coating.

3.1.3.2 No coating is required on stainless steel surfaces unless determined by the CONTRACTOR to be at risk from chloride exposure.

3.1.3.2.1 Where applicable, refer to WTP Project specification 24590-WTP-3PS-PX04-T0004, *Engineering Specification for Epoxy Coating of Stainless Steel Items That are Buried, Embedded or Insulated* for specific requirements for applying coatings on stainless steel.

3.1.3.2.2 Sherwin Williams Macropoxy 646 and Carboline Carboguard 890 are the only coatings approved for use on stainless steel surfaces.

3.1.3.2.3 Repair coating materials shall be the same as those originally used.

3.2 Patching/Filler Materials

3.2.1 Materials used to patch or fill holes, shrinkage cracks, and defects in the concrete shall meet the following requirements:

3.2.1.1 For holes larger than 1/2 inch in its largest dimension, the filler may be a non-shrink, structural concrete grout with a slump sufficient to fill holes on a vertical or overhead surface, while staying flush with the surface plane. The concrete structural grout shall be compatible with the SPC system specified for use on the concrete surface. Compatibility shall be verified by applying the SPC over a cast sample of the structural concrete grout followed by a pull-off adhesion of at least 200 psi per ASTM D4541, *Standard Test Method for Pull-Off Strength of Coatings Using Portable Adhesion Testers* using test procedures applicable for Type II and Type IV instruments listed in Annex A.2 and A.4.

3.2.1.2 For holes up to 2 inches in its largest dimension, the filler may be a 100% solids proprietary rigid polymeric filler material as recommended by the SPC manufacturer with a slump sufficient to fill holes on a vertical or overhead surface, while staying flush with the surface plane. The polymeric filler may be applied in more than one application to fill large voids flush with the concrete surface plane of concrete to steel embed surface plane. The proprietary polymeric filler material shall be compatible with the SPC system specified for use on the concrete surface. Compatibility shall be verified by applying the SPC over a cast sample of the proprietary filler material followed by a pull-off adhesion of at least 200 psi per ASTM D4541 using test procedures applicable for Type II and Type IV instruments listed in Annex A.2 and A.4.

3.2.1.2.1 Rigid polymeric filler materials used in R5 areas, where the 40-year accumulated radiation level will be greater than 2E8 rads that are not made with the same generic resin type, shall be radiation tolerance tested in combination with the SPC system specified for use in that particular area. The specimens shall be prepared for testing as follows:

- Using the standard concrete test blocks identified in Appendix B, drill a hole ½" x ½" in each face of each block. Fill the hole with the proposed filler material flush with the surface plane of the block. Apply the SPC systems identified for use in the R5 areas. Perform radiation tolerance testing per Appendix B.

3.2.1.3 For stable non-moving, cracks fill flush with the surface plane using a 100% solids proprietary polymeric filler material recommended by the SPC manufacturer as defined in Section 3.2.1.2. Large cracks shall be routed out as shown on Appendix G, Secondary Containment Installation Typical Details Installation Detail 4.

3.2.1.4 Construction Joints

The Washington Administrative Code (WAC) requires that DWP vault systems (concrete walls and floor areas used for SC) be provided with chemical-resistant water stops at all joints, and be provided with an impermeable interior coating or lining that is compatible with stored waste in accordance with WAC 173-303-640[4][e][ii] [C & D]. Water stop installation details are provided in 24590-WTP-PER-CSA-02-001, *Secondary Containment Design*. Following installation of water stops, concrete is still required to be coated per the coating systems described in Appendix C Table 2.

3.2.1.4.1 For construction joints (other than those at inside wall-to-wall or wall-to-floor corners) in walls or floors within areas required for SC DWP and/or Non-DWP, a formed or created (e.g., saw-cut) rectangular slot shall be provided by others, centered on the construction joint after the concrete is placed and cured. Apply the specified coating system primer in the joint, install a bond breaking tape in the base of the joint, and then install the flexible epoxy filler flush with the concrete surface and overcoat the joint with the specified coating system. Refer to Appendix G, Installation Detail 3B.

3.2.1.5 For coving in corners (filler material with 2-inch radius), use a flexible epoxy filler material. Where coving materials will serve as a water stop, the prequalification requirements in Appendix B, Section 1.2.10 apply.

3.2.1.5.1 Secondary containment for DWP tank and miscellaneous unit areas that do not have free flowing drains and do not have chemical-resistance water stops at construction joints in accordance with WAC 173-303-640[4][e][ii][C] must use the glass reinforced coving installation detail. Refer to Appendix G for Installation Details 2A and 2B. The use of glass reinforced coving and SPCs for DWP areas must receive approval from Department of Ecology prior to installation.

3.2.1.5.2 Secondary containment areas that do not have regulated tanks but do have free flowing drains are not required to use the glass reinforced coving installation detail. Instead, refer to Appendix G for Installation Details 1A and 1B.

3.2.1.5.3 Secondary containment for non-DWP areas that do not have free flowing drains are not required to have chemical-resistance water stops at construction and must use the glass reinforced coving installation details. Refer to Appendix G for Installation Details 2A and 2B. If the proximity of permanent plant equipment or material (e.g. drains, ladder, piping, electrical, etc.) prohibits the full 2-inch radius coving, the coving radius may be reduced to accommodate the coating installation.

3.3 Abrasives

3.3.1 Abrasives for blast cleaning shall be clean, free of oil or contaminants, and dry. The particle size shall be capable of producing the specified surface texture or surface profile. Mineral and slag abrasives shall meet the requirements of Standard by Society of Protective Coatings (SSPC) AB-1. The first batch/lot of non-packaged abrasives shall be tested for water soluble contaminants and the conductivity shall not exceed 1,000 microsiemens/cm when tested in accordance with ASTM D4940, *Test for Conductimetric Analysis of Water Soluble Ionic Contaminants of Blasting Abrasives,* Section 1.0-2.0. Abrasives used at the WTP Project site shall be < 1% silica.

3.3.2 When using reclaimed steel grit/shot abrasive, the particle size shall be capable of producing the specified surface texture. All reclaimed abrasives shall be tested for water-soluble contaminants and conductivity. Conductivity shall not exceed 1,000 microsiemens/cm when tested in accordance with ASTM D 4940, Section 1.0-2.0.

3.3.3 Reclaimed grit used for abrasive cleaning shall be tested for the presence of oil and grease by immersing a sample of spent abrasive in clean tap water and checking for oil flotation. Tests shall be made at the start of blasting and every 4 hours thereafter. If oil is evident, the contaminated abrasive shall be cleaned or replaced. All surfaces blasted since the last

successful test shall be completely cleaned of contamination, then re-blasted using clean abrasive.

3.3.4 Expendable abrasive (Green Diamond/Black Beauty) shall be used on a once only basis and then discarded.

3.3.5 Water Quality

3.3.5.1 Water used for wet abrasive blasting or high pressure water jetting shall be clean tap or potable water and shall not exhibit any evidence of an oily sheen.

3.4 Prohibited Materials

3.4.1 Refer to 24590-WTP-LIST-CON-08-0001 *List of Restricted Materials* for a list of restricted materials for use on the WTP Project.

3.4.2 Refer to Section 3.1.3 for material restrictions for use on stainless steel items and equipment.

4 Application

4.1 General

4.1.1 It shall be the SUBCONTRACTOR's responsibility to stop the surface preparation and coating at any time when conditions exist that might adversely affect the quality. The CONTRACTOR's representative may reject any prepared or coated surfaces not in compliance with this specification.

4.1.2 Coating application personnel shall be individually qualified and certified in accordance with the SUBCONTRACTOR's accepted written procedures and classroom training on the WTP Project specifications. Guidance for qualifying painters/application personnel are contained in ASTM D4228, *Standard Practice for Qualification of Coating Applicators for Application of Coatings to Steel Surfaces* and ASTM D4227, *Standard Practice for Qualification of Coating Applicators for Application of Coatings to Concrete Surfaces*, Sections 1-10 and Figure #2 or others as accepted by the CONTRACTOR.

4.1.3 Mock-ups for each coating system shall be satisfactorily completed and approved by the CONTRACTOR. A portion of the permanent coating installation may be designated as a mock-up during each step of the coating application as approved by the CONTRACTOR.

4.2 Pre-Surface Preparation

4.2.1 Prior to mechanical cleaning, the surfaces to be coated shall be cleaned in accordance with SSPC-SP1, *Solvent Cleaning* to remove oil, grease, dirt, silicone, marks made with waxy or greasy markers, graffiti, curing compounds, or form release residue or other foreign matter that could interfere with the proper bonding of the coating. The SUBCONTRACTOR shall inspect the floor for surface hardeners. Surface hardeners shall be removed prior to applying SPCs.

4.2.2 Inspection of surfaces exhibiting fins, ridges, and sharp projections or surfaces that require repair of honeycomb areas, tie rod holes, and cavities that are greater than 1/2 inch in its largest dimension (i.e., length, width, or depth) or cracks wider than 1/8 inch shall be performed by the SUBCONTRACTOR and includes a punch list to the CONTRACTOR. These defects must be removed or corrected prior to applying any coating.

4.2.3 All sharp corners that are scheduled to receive SPCs shall be included in the punch list and rounded to a radius of no less than 1/8 inch by others.

4.2.4 The SUBCONTRACTOR shall inspect all joint details and the configuration of the finished concrete sections in relation to the application of materials as shown in Appendix G, Secondary Containment Installation Details and the requirements of this specification.

4.2.5 Any remaining sharp edges, weld spatter, burrs, fins, ridges, tie rods, or projections found after the start of coating work shall be completely removed by grinding or other means. Pneumatic tools shall not be used unless they are fitted with effective oil and water traps on the exhaust air. If the steel embeds exhibit salt deposits, the area shall be pressure water washed (e.g., 2,000-5,000 psi) with demineralized water to remove the soluble salt contamination prior to abrasive blasting/water jetting.

4.2.6 Floor/wall and wall/wall coving shall be installed using the same flexible epoxy filler material defined in Section 3.2.1.5 or a filler material as recommended by the coating manufacturer and accepted by the CONTRACTOR. Coving shall be installed after concrete surface preparation and shall comply with the installation details in Appendix G.

4.2.7 To ensure a seal and a smooth transition from concrete surfaces onto steel embed plates, the concrete shall be chipped away from the edge of the embed plate at least 1/2 inch and at least 1/4 inch below the surface plane of the embed plate. The chipped away area shall be filled flush between the concrete and steel embed plate using the same rigid filler material defined in Section 3.2.1.2 or a filler material as recommended by the coating manufacturer and accepted by the CONTRACTOR (Refer to Appendix G).

4.2.8 To provide a structurally sound termination of a floor coating, a perimeter key shall be placed in the floor (Refer to Appendix G).

4.3 Surface Preparation

4.3.1 Prior to the start of work, the SUBCONTRACTOR shall examine all surfaces to be coated to determine their acceptability for the specified coating application work. If the surfaces are found to be unacceptable, the SUBCONTRACTOR shall either return the surface to an acceptable condition or immediately notify the CONTRACTOR in the punch list (Section 4.2.2) if the repairs are outside the scope of work. Coating work shall not commence until corrective action has been taken. Starting work prior to completion of corrective action shall preclude any subsequent claim by the SUBCONTRACTOR. The CONTRACTOR may require corrective action at the SUBCONTRACTOR's expense.

4.3.2 The abrasive mixture and the compressed air shall be clean, dry, and oil free. Moisture traps, in addition to oil and water separators mounted on the compressor, shall be used in compressed air lines to remove oil and moisture from air close to the point of use (Refer to Section 4.3.4.4 and 5.2.1.6).

4.3.3 Concrete Surfaces

4.3.3.1 Floors and walls shall be free of curing compounds, laitance, dirt, or other residue that could interfere with proper adhesion of the coating system.

4.3.3.2 Concrete shall be suitably roughened and textured using one of the specified methods of surface preparation during the coating system mock-ups performed and accepted by the CONTRACTOR. To achieve a clean roughened surface suitable for the specified coating systems, surfaces may be dry-abrasive blasted, wet-abrasive blasted (Refer to ASTM D4259, *Standard Practice for Abrading Concrete*, Sections 1.0-10.0) or cleaned and roughened by high pressure (10,000 psi to 25,000 psi) water jetting using a rotating head hand lance or self-propelled robot (Refer to SSPC SP12, *Surface Preparation Standards,* Appendix C and D for a description and operation and SSPC SP13, *Surface Preparation of Concrete,* Sections 3.0-6.0). Small areas may be prepared using grinders or sanders as accepted for use during mock-ups. Needle guns may only be used if followed by full abrasive blasting or water jetting to remove weakened/crushed concrete surface layer to sound dense concrete and only when the procedure has been shown to result in a coating adhesion of 200 psi minimum.

4.3.3.2.1 Water used for wet abrasive blasting or high pressure water jetting shall be clean tap or potable water and shall not exhibit any evidence of an oily sheen.

4.3.3.3 In addition, floors may be acid etched using 20% citric acid solution, when accepted by the CONTRACTOR. Acid etched surfaces shall be pH tested in accordance with ASTM D4262, *Standard Test Method for pH of Chemically Cleaned or Etched Concrete Surfaces*, Sections 1.0-8.0. The pH shall be no more than 1.0 pH lower or 2.0 pH higher than the pH of the potable rinse water. A suitable texture shall be achieved that will be agreed upon during the mock-up coating application. A detailed procedure on the use, clean up, and disposal of acid etching materials/rinse must be provided for review and acceptance by the CONTRACTOR.

4.3.4 Carbon Steel Surfaces

4.3.4.1 Prior to blast cleaning, items to be coated shall be visibly dry with the surface temperature of at least 5°F above the dew point. Concrete surfaces shall be determined suitably cured as defined by the CONTRACTOR.

4.3.4.2 Carbon steel surfaces to be coated shall be blast cleaned in accordance with the surface preparation requirements specified in Appendix D. Where abrasive blasting will damage the items or is impractical, SSPC-SP11, *Power Tool Cleaning to Bare Metal* may be substituted only in limited areas and only with CONTRACTOR's written permission to proceed.

4.3.4.3 Abrasive blasting of carbon steel shall result in an angular surface profile 1.5 to 3.0 mils as measured using a Testex Press-O-Film replication tape in accordance with ASTM D4417 Method C, *Standard Test Methods for Field Measurement of Surface Profile of Blast Cleaned Steel.*

4.3.4.4 The recycled abrasive mix shall be maintained clean of contaminants by continuous effective operations of cleaning machine scalping and air wash separators. Reclaimed grit used for abrasive cleaning shall be tested for the presence of oil/grease by immersing a

sample of spent abrasive in clean tap water and checking for oil flotation. Tests shall be performed at the start of blasting, and every 4 hours thereafter. If oil is evident, the contaminated abrasive shall be cleaned or replaced. All surfaces blasted since the last successful test shall be completely cleaned of contamination then re-blasted using clean abrasive. Blast cleaning shall not be performed in the immediate area where coating or curing of coated surfaces is in progress unless a vacuum system is employed that contains dust. All surfaces and equipment, which are not to be coated, shall be suitably protected from blast cleaning.

4.3.4.5 Burrs, slivers, scabs, lamination, weld spatter fins, ridges, and sharp protrusions which become visible after blasting shall be removed. The tools and manner employed to remove defects and sharp edges shall not burnish or destroy the surface profile. If the profile or roughness is reduced, it shall be re-blasted to produce the profile and roughness as required. The exhaust of pneumatic grinders shall not impinge on the cleaned surface. If the surface becomes contaminated, it shall be cleaned of contamination and then re-blasted as required. Carbon steel tools or implements shall not be used on stainless steel surfaces.

4.3.4.6 If visible rust occurs or if the cleaned surface becomes wet or otherwise contaminated, these surfaces shall be re-cleaned to the specified standard. Cleaned surfaces remaining un-coated overnight shall be re-cleaned to the specified cleanliness prior to applying the coating. Where concrete and carbon steel interface are proposed to be coated in one operation, every effort will be made to apply coating to the steel before surface deterioration.

4.3.4.7 After surface preparation is complete and before coating, pressurized air or a vacuum cleaning shall be used to remove all dust and abrasive residue. The air shall be clean and dry as verified in accordance with Section 5.2.1.6, so as not to contaminate the prepared surface. The operator shall ensure that all dust and abrasive residues are removed from the surface of blast profiles when vacuum cleaning is carried out.

4.3.4.8 Machined surfaces shall be protected from damage due to blasting and coating operations.

4.3.4.9 Equipment shall have all openings plugged, masked, and (or) blinded sufficiently to protect internals before abrasive blasting. After the coating operation is complete all internals shall be blown clean and/or vacuumed to remove any dust or abrasive blast media that may have entered the coated equipment.

4.3.5 Galvanized Steel Surfaces

4.3.5.1 Where galvanized steel falls into SC areas and requires a coating, the surface shall be cleaned per SSPC-SP1, *Solvent Cleaning* and allowed to dry. The galvanizing shall then be pretreated using a phosphoric acid solution (e.g., Amchem Galva-Prep) or brush blasted per SSPC-SP7, *Joint Surface Preparation Standard: Brush-Off Blast Cleaning* as recommended by the manufacturer of the coating material intended for use. After flushing the acid off using potable water, the surface area contacted by the acid and the rinse water shall be tested for pH. The pH shall be as indicated in specification Section 4.3.3.3.

4.3.5.2 Damaged galvanized steel shall be cleaned per SSPC-SP11, *Power Tool Cleaning to Bare Metal 1* using a 3M Clean-N-Strip™ disc and wheel, a flapper wheel with a 60-80 grit size or a slow variable speed sander using 60-80 grit sanding disc. All galvanized steel to be coated shall be pretreated as indicated in Section 4.3.5.1 of this specification.

4.4 Coating Application

4.4.1 Prior to applying SPCs, the concrete surface shall be dry as determined by the plastic sheet method in accordance with ASTM D4263, *Standard Test Method for Indicating Moisture in Concrete,* Sections 1.0-8.0.

4.4.2 Coatings shall be applied in accordance with CONTRACTOR accepted procedures (Refer to Section 9.2.1). The coating manufacturer's recommendations for the application temperature and curing temperatures versus times (between coats and after last coat) of the specified material shall be considered when determining minimum and maximum cure to recoat time intervals. Application and curing temperatures above or below the limits allowed by this specification (Refer to Section 4.4.5) shall be submitted to the CONTRACTOR for review and permission to proceed.

4.4.3 Coatings shall be applied using properly sized and type of equipment for the size and complexity of the item being coated. The equipment shall be clean with all components in good working order.

4.4.4 Bug holes, cracks, and construction joints shall be filled flush with the concrete surface plane or as identified in Appendix G, Secondary Containment Installation Details using a structural concrete grout, Five Star® V/O or Five Star® Vertical patch, or CONTRACTOR accepted alternate structural concrete grout or polymeric filler. Structural concrete grout shall be applied prior to applying the first coat or by applying the proprietary polymeric filler listed in Appendix C Table 2 for the selected coating system or CONTRACTOR accepted equal. Proprietary filler materials may be applied before or after the primer sealer coat, where acceptable to the specific coating manufacturer. The filler technique shall be developed during the mock-up to minimize the occurrence of pinholes in the finish coats.

4.4.5 Coatings shall be applied only when the surfaces to be coated are free of curing compound, free of concrete laitance, clean, properly textured, and dry. The substrate temperature shall be a minimum of 5°F above the dew point during coating application and until the applied coating is no longer moisture sensitive per the coating manufacturer's published data or written recommendations. The substrate and air temperature during coating application and curing shall be a minimum of 50°F (inorganic zinc primers 40°F) and a maximum of 110°F. If, during the coating curing phase, the substrate or ambient air temperature falls below the minimum temperature requirement and the coating has not reached the manufacturer's published minimum drying time to recoat time, then the minimum drying time to recoat time shall be extended by the duration of time the temperature was below 50°F (or 40°F), provided the following:

- The coating has not been exposed to precipitation or standing water
- The minimum temperature has not reached 35°F or less
- The extended time does not cause the drying time to recoat time to exceed the manufacturer's published maximum drying time to recoat time

The relative humidity during coating application shall not exceed 85 percent. Measure humidity in accordance with ASTM E337, *Standard Test Method for Measuring Humidity*

with a Psychrometer (Sections 1.0-19.0). Deviations from the above listed minimum and maximum substrate/air temperature and humidity limits may be allowed when in accordance with the coating manufacturer's published data or written recommendations and are accepted by the CONTRACTOR. The one firm limit is that the minimum substrate or air temperature shall not be less than 35°F regardless of the coating manufacturer's published or written recommendations.

4.4.6 The SUBCONTRACTOR shall record all batch numbers for each coating component used along with other information necessary for the CONTRACTOR to relate the batch to the area or item for which it was applied (Refer to Appendix F, Surface Preparation and Coating Inspection Form).

4.4.7 All coatings shall be thoroughly mixed until they are smooth and free from lumps, then strained through a screen of at least 30 mesh. Heavy-bodied materials that will not flow through a 30-mesh screen are exempt from straining. All coatings that could settle in the container during application must be kept under continuous mechanical agitation to ensure coatings expend their solid contents and do not settle during application.

4.4.8 Alternating coats shall have a visible color difference to insure full coverage over previous coats.

4.4.9 Dry film thickness of each coating shall be in accordance with Appendix C, Table 2 or as specified in the subcontract document (Refer to Section 5.2.3.6). The film thickness of concrete primer sealer may be measured using a WFT gage. The primer sealer must be tinted to a color that allows visual verification that it has been applied. At floors, walls, and ceilings that only require a clear sealer, the sealer shall not require tinting.

4.4.10 The minimum and maximum drying times between coats shall be in strict accordance with the coating manufacturer's latest published technical data sheets or written recommendations.

4.4.11 Runs, sags, voids, drips, overspray, loss of adhesion, bubbling, peeling, pinholes, or inadequate cure are not permitted and shall be corrected using CONTRACTOR accepted repair procedures.

4.4.12 Application equipment that will be reused, such as spray equipment, brushes, and rollers, shall be cleaned using the coating manufacturer's recommended solvents/cleaners.

4.5 Remedial Work

4.5.1 The completed coating on each item shall have the correct DFT and shall be free of damage and visible defects.

4.5.2 Repair of Dry Film Thickness Deficiencies

4.5.2.1 Defects such as runs, sags, overspray, and embedded particles shall be corrected by sanding to remove the defect. When defects are noticed in the finish coat, all areas sanded to remove abnormalities must be overcoated per the required dry film thickness in Appendix C Table 2 of this Specification. If the DFT of the primer or intermediate coat is reduced to less than the specified minimum, the area shall be abraded with 60-80 grit sand paper or flapper wheel

and an additional layer of coating shall be applied until sufficient thickness is achieved. If noticed during application, the sags or runs may be brushed out.

4.5.3 Repair of Damage

4.5.3.1 All damaged and loosely adhering coating shall be removed and the surface thoroughly cleaned using a vacu-blaster or high pressure water jetting, 60-80 grit sanding disc, 60-80 grit sandpaper, 60-80 grit flapper wheel, or 3M Clean-N-Strip. Edges of the breaks shall be feathered to insure a smooth transition and the designated number of prime and finish coats shall be applied. Care shall be taken to ensure adjacent coatings are not heat damaged, polished, or burnished.

4.5.4 Loss of adhesion, delamination, blisters, bubbling, and fish eyes in the applied coating requires the affected area of coating to be removed and reapplied in accordance with this specification.

4.5.5 Pinholes shall be filled or otherwise repaired prior to the application of the final coat. Pinhole repairs in the final coat shall blend in and not be visually obvious.

4.5.6 Touch-Up Coating and Sealing of Steel Items Attached by Post-Installed Concrete Anchors

4.5.6.1 Post-installed anchors that attach carbon steel items to concrete surfaces require the mechanical joint formed between the concrete and carbon steel attachment to be sealed. Carbon steel anchors and the anchored carbon steel item shall also receive coating touch-up.

4.5.6.2 Stainless steel post-installed anchors that attach stainless steel items to concrete surfaces require the mechanical joint formed between the concrete and attachment to be sealed. Stainless steel post-installed anchors and stainless steel attachments do not require touch-up coating.

5 Inspections

5.1 Personnel Qualifications

5.1.1 <u>All</u> coating work inspection personnel shall be trained, qualified, and certified in accordance with the SUBCONTRACTOR's accepted procedures. The inspectors shall meet or exceed the minimum requirements for a Level I coatings inspector as described in ASTM D4537, *Standard Guide for Establishing Procedures to Qualify and Certify Personnel Performing Coating and Lining Work Inspection in Nuclear Facilities,* Section 6.0. At least one inspector shall meet the minimum requirements for a Level II Inspector as described in ASTM D4537, Section 1.0-8.0. The SUBCONTRACTOR shall conduct an examination, a performance evaluation, and issue a certification for each inspector in accordance with ASTM D4537, Section 9.0. The Level II inspector shall supervise the work of all Level I inspectors. The SUBCONTRACTOR's inspector must demonstrate his/her capability of using the inspection equipment and performing all the required inspections. The SUBCONTRACTOR's inspector training, qualification, and certification plan and associated procedures shall satisfy the requirements of ASTM D4537, Sections 1.0-8.0 using the guidelines provided in ASTM D5498, *Standard Guide for Developing a Training Program for Personnel Performing*

Coating Work Inspection for Nuclear Facilities including classroom training on the WTP specifications applicable to coating inspection. Additional coating work inspection guidance is found in ASTM D6237, *Standard Guide for Painting Inspectors (Concrete and Masonry Substrates* and ASTM D3276, *Standard Guide for Painting Inspectors (Metal Substrates),* which shall be used in developing procedures for training and certifying coating work inspectors.

5.2 Field Coating Inspection

5.2.1 General

5.2.1.1 The SUBCONTRACTOR shall have the full responsibility for the coating application quality in accordance with this specification and shall be responsible for stopping work activities when conditions develop that could adversely affect the quality of the completed work. All work is subject to the CONTRACTOR's inspection surveillance.

5.2.1.2 The CONTRACTOR's representative shall be the final authority on the specification compliance for surface preparation and material application. Any coating which, in the judgment of the CONTRACTOR's representative, has not been applied in conformance with this specification shall be rejected.

5.2.1.3 The CONTRACTOR's representative shall have access to each part of the process and shall have the right and opportunity to witness any of the quality control tests.

5.2.1.4 The SUBCONTRACTOR shall furnish the necessary testing and inspection instruments, properly calibrated, and certificates maintained. Calibration of testing and inspection instruments shall be traceable to National Institute of Standards and Technology (NIST) or CONTRACTOR authorized alternative standards. If equipment is suspected of being out of calibration, it shall be re-calibrated and certificates made available for verification by the CONTRACTOR. Such equipment shall be available for use by the CONTRACTOR in conducting surveillance of the work.

5.2.1.5 The SUBCONTRACTOR shall halt the coating work and make corrections to the procedures, as necessary to correct repetitive faults found in the work.

5.2.1.6 Prior to using compressed air, the quality of the air downstream of the separator shall be tested in accordance with the requirements of ASTM D4285, *Standard Test Method for Indicating Oil or Water in Compressed Air* by blowing the air onto a clean white blotter or cloth for two (2) minutes at a distance of no more than 12 inches to check for any contamination, oil, or moisture. This test shall be performed at the start of work and at not more than 4 hour intervals. The test shall also be made after any interruption of the air compressor operation or as required by the CONTRACTOR. The air shall be used only if the test indicates no visible contamination, oil, or moisture. If contaminants are evident, the equipment deficiencies shall be corrected and the air stream shall be re-tested. Moisture separators shall be bled continuously. All lines shall be tested individually prior to use. Surfaces determined to have been blown down or blasted with contaminated air shall be cleaned of all contamination then re-blasted with clean air and abrasive. Coatings determined to have been applied using contaminated air shall be removed and reapplied using clean air.

5.2.1.7 Inspection points shall be established as follows:

- Prior to the start of work
- Immediately following the surface preparation
- Immediately prior to the coating application
- Following the application of each coat
- Following the curing of the coating
- Final inspection and sign-off in accordance with the Project requirements

5.2.1.8 Any defects disclosed by inspection shall be re-inspected after correction.

5.2.1.9 The SUBCONTRACTOR shall keep the records indicated below, and submit these records to the CONTRACTOR (refer to Section 9.2.4 and Appendix F). The following table lists the frequencies:

Coating/Inspection Step		Required Frequency
1.	Pre-surface prep surface preparation profile	100% visual on pre-surface 100% on surface prep/cleanliness Profile first item of each type per shift and every 20 items thereafter or other frequency as CONTRACTOR accepted in SUBCONTRACTOR's procedures.
2.	Environmental/air quality	At the start of each work day and every 4 hours thereafter, or more often during changing conditions.
3.	Recirculated abrasive	At the start of work and every 4 hours thereafter.
4.	Thickness per SSPC-PA2, *Measurement of Dry Paint Thickness with Magnetic Gauges*	On large items, 5 spot measurements per 100 ft^2. On items < 100 ft^2, 4 spot measurement On items less than 4 inch (valves, fittings, components, etc.), 2 spot measurements For repair spots < 6 in^2 and > 1 in^2, 2 spot measurements For repair spots < 1 in^2, 1 spot measurement For small chips/nicks/scratches and pinhole size repair spots, visual only. For complex surfaces such as structural steel (steel beams), the frequency of DFT measurements shall be in accordance with SSPC-PA2, Appendix 3, Section A3.4.1 excluding any measurements on the flange toes. In accordance with Figure A.3, *The Surface of a Steel Beam*, the following locations are acceptable for the test measurements: 1, 3, 4, 5, 7, 9, 10, and 11. The following locations are excluded from test measurements: 2, 6, 8, and 12. For beams less than 20ft-0 inch, 2 sets of 8 spot measurements shall be taken. For beams 20ft-0 inch thru 60 ft-0 inch 3 sets of 8 spot measurements shall be taken.
5.	Visual on Applied Coating	100% of all items

5.2.1.10 Appendix F is an example for a Surface Preparation and Coating Inspection Form. This form, or a form that contains the same information, is required for daily inspection documentation.

5.2.2 Surface Preparation Inspections

5.2.2.1 Verify bug holes, voids, cracks, and construction joints are properly filled. This is not necessary if filler is applied after surface preparation and sealer coat application.

5.2.2.2 Verify environmental conditions and compressed air quality (Refer to Section 4.3.2, 4.3.4.4, and 5.2.1.6).

5.2.2.3 Verify recycled abrasive is grease and oil free (Refer to Section 4.3.4.4).

5.2.2.4 Verify surface cleanliness and texture (Refer to Sections 4.3.3.1, 4.3.3.2, 4.3.4.2, and 4.3.4.3).

5.2.2.5 Grease-free chalk shall be used to mark local areas that do not meet the specified requirements (e.g., soapstone and crayons are not acceptable).

5.2.3 Coating Application Inspections

5.2.3.1 Environmental conditions and compressed air quality shall be verified per Sections 4.3.4.1, 4.3.2, 4.4.5, and 5.2.1.9.

5.2.3.2 Dry film thickness on steel items shall be measured with a magnetic film thickness gage such as an Elektro-Physik "Mikrotest" or Positector 2000, 6000, or CONTRACTOR accepted equal in accordance with SSPC-PA2, *Measurement of Dry Paint Thickness with Magnetic Gauges*. Steel items and individual items on equipment less than one hundred (100) ft^2 in surface area shall have at least 4 evenly spaced spot readings per item. Equipment or equipment components less than 4 inches in its largest dimension only require 2 evenly spaced spot reading per item.

5.2.3.3 Coating thickness on concrete shall be measured during application using a wet film thickness (WFT) gage (Refer to ASTM D4414, *Standard Practice for Measurement of Wet Film Thickness,* Sections 1.0-10.0 applicable to procedure A). Dry film thickness (DFT) shall be calculated from WFT and coating material volume solids, or by using a nondestructive ultrasonic tester such as the Positector 100 or accepted equivalent (Refer to ASTM D6132, *Standard Test Method for Nondestructive Measurement of Dry Film Thickness of Applied Organic Coatings Using an Ultrasonic Coating Thickness Gage,* Sections 1.0-11.0). Each 100 ft^2 shall receive 5 evenly spaced gage readings. Areas less than 100 ft^2 in surface area shall have at least 2 evenly spaced spot readings per area.

5.2.3.4 Wet film thickness gages shall be of high-quality steel or stainless steel, with a maximum blade width of 1.5 inches such as Nordson Model 790 or CONTRACTOR accepted alternate. Prior to initial use, and annually thereafter, an accuracy check shall be made using a measuring device traceable to NIST. Accuracy shall be ±0.00015" for the 1-4 mil range, ±0.00025" for the 5-15 mil range, and ±0.0005" for the 15-60 mil range. Additionally wet film thickness gages shall be visually inspected for paint residue and physical damage (bending, cracking, wear, etc.) at the start of work and every 4 hours thereafter during use.

Paint residue shall be removed and gages exhibiting physical damage shall be declared unusable.

5.2.3.5 The DFT gage shall have a minimum of a zero to 40 mil or zero to 60 mil working range and shall be checked for calibration accuracy in accordance with SSPC-PA2, *Measurement of Dry Paint Thickness with Magnetic Gauges* at the start of each shift against certified coating thickness calibration standards for non-magnetic coating of steel traceable to NIST or CONTRACTOR's accepted alternative standards. The calibration standards shall be in the 1.5 mil to 40.0 mil range, unless otherwise specified. Any surface with a measured thickness outside of the limits described in Section 4.4.9 shall be rejected. These areas shall be reworked or re-cleaned prior to acceptance by the CONTRACTOR.

5.2.3.6 When DFT becomes debatable or indeterminate, the CONTRACTOR reserves the right to require the use of destructive testing using a Tooke gage in accordance with ASTM D4138, *Standard Practices for Measurement of Dry Film Thickness of Protective Coating Systems by Destructive, Cross-Sectioning Means,* Sections 1.0-9.0 or by nondestructive ultrasonic testing in accordance with ASTM D6132, *Standard Test Method for Nondestructive Measurement of Dry Film Thickness of Applied Organic Coatings Using an Ultrasonic Coating Thickness Gage*,Sections 1.0-11.0 to verify DFT. All areas damaged by destructive testing shall be repaired by the SUBCONTRACTOR.

5.2.3.7 Runs, sags, voids, drips, overspray, loss of adhesion, bubbling, pinholes, peeling, or inadequate cure are not permitted and shall be repaired or reworked.

6 Storage, Handling, and Shipping

6.1 Coating Materials

6.1.1 Coating materials shall not be stored in direct sunlight or exposed to inclement weather (e.g., rain, snow, sleet, freezing rain, dew point condensation, see also Section 6.1.6). Materials shall remain under cover until ready to use.

6.1.2 Coatings, thinners, cleaning solvents, and other flammable materials stored at any location shall be kept away from combustion sources and shall be stored in metal flammable material storage cabinets meeting NFPA and OSHA standards. Thinners and solvents shall be transported to the point of use in approved safety containers meeting OSHA standards.

6.1.3 Coating material shall be delivered in manufacturer's original unopened containers. Each container shall be clearly identified with the manufacturer's name, product designation, batch number, date of manufacture, and shelf life expiration date.

6.1.4 Coating materials shall have a minimum of 120 days of its shelf life remaining at the time the shipment arrives at the Project site or the SUBCONTRACTOR's warehouse.

6.1.5 The maximum shelf life allowed for coating/sealant materials used on the WTP project is as defined by the manufacturer's technical data sheet and determined from the date of their manufacture. Coating/sealant materials which have exceeded their shelf life shall not be used and shall be placed on HOLD and segregated from other coating materials.

6.1.5.1 A shelf life extension of no less than three (3) months and no more than six (6) months may be issued by the coating/sealant manufacturer. The shelf life extension shall be based on laboratory testing of retained samples taken at the time of manufacture or by testing a sample provided from the actual coating/sealant material in question. Where testing verified an outdated coating/sealant material still complies with its original design criteria, it is acceptable for shelf life extension.

6.1.5.2 A new Coating Manufacturer's Product Identity Certification Record (Appendix E) shall be provided by the coating/sealant manufacturer that includes the test results and specifically indicates it was provided to document shelf life extension including new expiration date. Upon receipt of the Appendix E form, materials shall be removed from HOLD and returned to active storage. Coating/sealant containers shall be marked with new expiration date by permanent marker

6.1.5.3 Coating materials that have not been stored or handled in accordance with Sections 6.1.1, 6.1.6, 6.1.7, and 6.1.8, may not have their shelf life extended.

6.1.6 Coating material shall be protected from moisture, direct sunlight, and temperatures below 40°F or above 100°F, unless otherwise allowed by the coating manufacturer's latest published instructions and accepted by the CONTRACTOR.

6.1.7 Coating material containers, where the airtight seal has been broken or any of the contents are lost, shall not be used.

6.1.8 Coating material containers shall not be opened except for immediate use.

6.1.9 Unused material shall be returned to storage as soon as possible at the end of each workday. Materials left out for more than 10 hours in an uncontrolled storage area (areas without environmental controls or environmental monitoring that are exposed to ambient weather) shall not be used and shall be placed in a segregated hold area until final disposition, then removed from the job site if rejected. No waterborne coatings shall be stored in areas where the temperatures are below 40°F.

6.1.10 All required coating material certifications for each batch of material delivered to the job site shall be available at the time of material receipt. Materials delivered to the shop or field without the required documentation shall not be used and the SUBCONTRACTOR shall tag and place discrepant materials into a hold area clearly separated from acceptable material. Once the required documentation is received or otherwise corrected and found to be acceptable, the discrepant material may then be taken off hold status and used.

6.1.11 All coating/sealant materials shall be stored on-site in accordance with 24590-WTP-GPP-SIND-026 *Fire Prevention and Protection.*

6.2 Batch Information

6.2.1 Each container of coating material received and used by the SUBCONTRACTOR shall be marked with the following:

- The manufacturer's name
- The product designation

- Batch/lot number
- Location and date of manufacture
- The shelf life and (or) expiration date

6.2.2 Appendix E is an example of the Coating Manufacturer's Product Identity Certification Record. This document is required from the coating manufacturer for each batch of product (i.e., manufactured coating material, not individual ingredients).

7 Quality Assurance

7.1 General

7.1.1 The SUBCONTRACTOR shall control the quality of items and services to meet the requirements of this specification, applicable codes and standards referenced herein, and associated subcontract documents. The SUBCONTRACTOR shall prepare and maintain documentation to provide evidence of compliance with CONTRACTOR accepted procedures and this specification. A copy of the coating inspection documentation shall be included in the shipping documentation.

7.1.2 The SUBCONTRACTOR, including any lower-tier organizations, shall be subject to surveillance inspection by the CONTRACTOR's representative until completion or termination of the subcontract. This surveillance inspection does not relieve the SUBCONTRACTOR from the responsibility for conformance to the requirements of procurement documents, this specification and CONTRACTOR accepted procedures.

7.1.3 The SUBCONTRACTOR shall maintain a quality assurance plan (QAP) for items located in non-ALARA and ALARA areas, as defined in Section 1.4, which addresses as a minimum, the elements and implementing procedures called for in the Supplier Quality Assurance Program Data Sheet (example shown in Appendix A).

7.1.4 Quality Assurance Plan

7.1.4.1 A written QAP must be developed, implemented, and maintained.

7.1.4.2 The QAP must describe the organizational structure, functional responsibilities, levels of authority, and interfaces for those managing, performing, and assessing the work.

7.1.4.3 The QAP must describe management processes, including planning, scheduling, and resource considerations.

7.1.5 Personnel Training and Qualification

7.1.5.1 Personnel must be trained and qualified to ensure they are capable of performing their assigned work.

7.1.5.2 Personnel must be provided continuing training to ensure that job proficiency is maintained.

7.1.6 Quality Improvement

7.1.6.1 Processes to detect and prevent quality problems must be established and implemented.

7.1.6.2 Items, services, and processes that do not meet established requirements must be identified, controlled, and corrected.

7.1.6.3 Correction must include identifying the causes of problems and working to prevent recurrence.

7.1.6.4 Item characteristics, process implementation, and other quality-related information must be reviewed and the data analyzed to identify items, services, and processes needing improvement.

7.1.7 Documents and Records

7.1.7.1 Documents must be prepared, reviewed, approved, issued, used, and revised to prescribe processes, specify requirements, or establish design.

7.1.7.2 Records must be specified, prepared, reviewed, approved, and maintained.

7.1.8 Work Processes

7.1.8.1 Work must be performed to established technical standards and administrative controls using approved instructions, procedures, or other appropriate means.

7.1.8.2 Items must be identified and controlled to ensure their proper use.

7.1.8.3 Items must be maintained to prevent their damage, loss, or deterioration.

7.1.8.4 Equipment used for process monitoring or data collection must be calibrated and maintained.

7.1.9 Design

7.1.9.1 N/A

7.1.10 Procurement

7.1.10.1 Procured items and services must meet established requirements and perform as specified.

7.1.10.2 Prospective suppliers must be evaluated and selected on the basis of specified criteria.

7.1.10.3 Processes to ensure that approved suppliers continue to provide acceptable items and services must be established and implemented.

7.1.11 Inspection and Acceptance Testing

7.1.11.1 Inspection and testing of specified items, services, and processes must be conducted using established acceptance and performance criteria.

7.1.11.2 Equipment used for inspections and tests must be calibrated and maintained.

7.1.12 Management Assessment

7.1.12.1 N/A

7.1.13 Independent Assessment

7.1.13.1 N/A

7.1.14 Inspection Points

7.1.14.1 The SUBCONTRACTOR shall provide the CONTRACTOR's representative with a work activity schedule and shall notify the CONTRACTOR of all required inspection points prior to the scheduled date for coating activities (Refer to Section 1.3.10 and 1.3.11 herein).

7.1.15 Work Plans and Procedures

7.1.15.1 If the SUBCONTRACTOR's proposed work plan or procedures differ from the requirements of this specification, the SUBCONTRACTOR shall specifically identify and explain all differences in writing, using a supplier deviation disposition request (SDDR) or other appropriate WTP Project document, and submitted to the CONTRACTOR for review and approval prior to proceeding with a known deviation after the fact.

7.1.16 Witness and Hold Points

7.1.16.1 All pre-established witness and hold points shall be witnessed by the CONTRACTOR unless a written waiver has been issued.

7.1.17 Training

7.1.17.1 Coating application personnel performing surface preparation and coating application shall be trained in the specific Project coating requirements and the associated CONTRACTOR accepted work procedures that are relevant to their individual work assignments.

7.1.17.2 Painter/coating application personnel used to prepare the surface and apply coatings shall be trained, qualified, and certified in accordance with the SUBCONTRACTOR's procedures accepted by the CONTRACTOR.

7.1.17.3 The SUBCONTRACTOR's coating work inspectors shall have previous experience in coating inspection and shall receive documented training in the specific Project coating requirements, ASTM standards, and other relevant standards including the CONTRACTOR accepted work procedures. All coating inspectors shall be trained, qualified, and certified Level I inspectors meeting the requirements of Section 5.1.1. Inspector training, qualification, and certification shall also comply with the SUBCONTRACTOR's document(s) identified on the submitted Supplier Quality Assurance (QA) Program Data Sheet (Appendix A).

8 Configuration Management

8.1 Design Changes Incorporated by Reference

The following is a listing of design changes that are identified by reference and do not require modification to the specification:

Design Change Documents
(None at this time)

* Denotes a new entry for this revision of the specification

9 Documentation and Submittals

9.1 Documentation

9.1.1 The SUBCONTRACTOR shall provide a record of all materials used (regarding individual batch numbers, refer to Coating Manufacturer's Product Identity Certification Record, Appendix E).

9.1.2 The SUBCONTRACTOR shall provide a record of all required daily inspections (Example-Appendix F) that includes pre-surface preparation, compressed air cleanliness, environmental conditions, surface preparation and roughness, location of field repairs coated, application, visual inspection, DFT, and all touch-up/repair. This record shall include the coating and thinner materials used and the ID of the items coated to provide traceability.

9.1.3 All daily inspection reports shall be available for review by the CONTRACTOR representative within 24 hours from the time the documented work is performed.

9.1.4 SUBCONTRACTOR documentation forms or the way that the actual work will be documented shall be provided by the SUBCONTRACTOR as part of the procedures submittal for review by the CONTRACTOR.

9.2 Submittals

9.2.1 SUBCONTRACTOR shall submit detailed written procedures for the following:

- Material receiving, marking, storage, handling
- Surface preparation
- Application
- Curing
- Inspection and testing
- Touch-up and repair
- Application personnel qualification and inspector qualification (G321-E, category 28.0)

- Proposed documentation forms. The final procedure and documentation forms shall be submitted for the CONTRACTOR's approval (G321-E, Category 15.0)

(The above items can be grouped into a common procedure where appropriate)

9.2.2 Materials shall be used only if they are prequalified in accordance with Appendix B and if the SUBCONTRACTOR provides a current Coating Manufacturer's Product Identity Certification Record (Appendix E). Coating material prequalification testing is only required of the coating manufacturer and not the SPC application SUBCONTRACTOR.

9.2.3 The SUBCONTRACTOR shall identify the specific products by manufacturer and catalog number and shall submit the coating manufacturer's latest published product data sheet application instructions and SDS. Conflicts, if any, between the SUBCONTRACTOR's procedures, the coating manufacturer's recommendations, and this specification shall be referred to the CONTRACTOR for resolution and written permission to proceed (G321-E, category 11.0). The SUBCONTRACTOR shall submit original Coating Manufacturer's Product Identity Certification Records for each and every batch of coating material purchased for use on the WTP Project (Refer to Appendix E, Coating Manufacturer's Product Identity Certification Record; refer to G321-V, category 13.0).

9.2.4 The SUBCONTRACTOR shall complete and submit a daily inspection record as a part of the work procedures that includes all elements provided in Appendix F as a minimum. An entry for wet bulb is not required when the accepted device used to measure humidity and dew point does not require a wet bulb (Refer to Section 8.1.9 and 10.2; refer to G321-V, category 13.1).

9.2.5 The SUBCONTRACTOR shall submit a Supplier Quality Assurance Program Data Sheet (Appendix A) appropriate for the activity being performed (e.g., manufacture of SPCs or application of specified SPCs), along with coating procedures. The SUBCONTRACTOR shall identify their Quality Assurance (QA) Plan documents and paragraph references on the QA Program Data Sheet. All required QA Plan elements and corresponding SUBCONTRACTOR's identified documents are subject to CONTRACTOR's evaluation and verification.

9.2.6 The SUBCONTRACTOR shall provide a personnel training and certification plan for applicators and inspectors (Refer to Sections, 7.1.5.1, 7.1.5.2, 5.1.1, 4.1.2 and Appendix A).

9.2.7 The SUBCONTRACTOR shall supply with their coating procedures a list of previous Project case histories, where they applied coating materials similar to the materials specified herein. This list shall include the type of item coated, the project name, a project client contact name and phone number, if possible, for verification.

9.2.8 Color samples shall be submitted prior to the start of work. Colors shall be as defined in Appendix D or as otherwise defined by the CONTRACTOR. Color samples sizes shall be 1' x 1'. At least five sets of all colors shall be submitted. The type of panel used and the coating material used for the color samples shall be as agreed upon with the CONTRACTOR.

Appendix A
Supplier Quality Assurance Program Requirements Data Sheet

DOE ORDER 414.1C REQUIREMENTS

The following marked QA Program Elements of DOE ORDER 414.1C apply and are subject to CONTRACTOR evaluation and verification (see also exhibit J in subcontract documents)

DOE O 414.1A	N/A	PROGRAM ELEMENTS	SUPPLIER DOCUMENT AND PARAGRAPH REFERENCES TO BE COMPLETED BY THE SUPPLIER
☐	☐	PROGRAM	
☐	☐	PERSONNEL TRAINING & QUALIFICATION	
☐	☐	QUALITY IMPROVEMENT	
☐	☐	DOCUMENTS & RECORDS	
☐	☐	WORK PROCESSES	
☐	☐	DESIGN	Coating manufacturers and coating applicators "Design" for Special Protective Coatings provided by 24590-WTP-3PS-AFPS-T0006
☐	☐	PROCUREMENT	
☐	☐	INSPECTION & ACCEPTANCE TESTING	
☐	☐	MANAGEMENT ASSESSMENT	
☐	☐	INDEPENDENT ASSESSMENT	

SIGNATURE OF SUPPLIER REPRESENTATIVE _____

0		Issue for Use				
REV.	DATE	REASON FOR REVISION	BY	CHECKED	APPROVED	QA

Special Protective Coatings For Secondary Containment Areas.	JOB NO. 24590-101
	DATA SHEET NO.
	REV. 0

Appendix B
WTP Project Special Protective Coating (SPC) Material Prequalification Requirements for Secondary Containment

1.0 Prequalification Testing for ALARA Zones/Areas

1.1 All coating material prequalification testing shall be performed by the coating manufacturers listed in Appendix C.

1.2 Coating systems that will be applied on items that will be located inside ALARA Zones/Areas shall satisfy the following test requirements:

1.2.1 Radiation tolerance testing: Coating systems shall be tested for tolerance to radiation exposure as a complete system in accordance with the requirements of ASTM D4082, *Standard Test Method for Effects of Gamma Radiation on Coatings for Use in Nuclear Power Plants* and as follows:

1.2.1.1 For coating systems to be used in areas where the total anticipated accumulated dose will not exceed 2E8 rads, no radiation tolerance testing is required.

1.2.1.2 For coating systems to be used in areas where the total anticipated accumulated dose is >2E8 rads up to 1E9 rads, test the coatings at 1E9 rads.

1.2.1.3 For coating systems to be used in areas where the total anticipated accumulated dose is >1E9 rads, the test radiation level shall equal or exceed the highest anticipated accumulated dose.

1.2.1.4 The acceptance criteria for the irradiation test shall be "no defects" as described in ASTM D4082. In addition to the defects stated in ASTM D4082, also check the coating on the test specimens for softening. The coating shall not soften because of the radiation exposure.

1.2.2 Decontamination testing: Generic SPC materials such as two component or three component Epoxy and Epoxy Novolac types have historically shown very good decontamination and chemical resistance properties and are suitable for use on the WTP project. Other generic coating materials located in areas that will require operational decontamination must be able to withstand the decontamination chemicals and temperatures that will be used as part of the decontamination process.

1.2.3 Abrasion resistance testing: In addition to radiation tolerance testing of coating systems that will be applied to surfaces inside ALARA Zones/Areas or on items that will be located inside ALARA Zones/Areas, those coating systems and selected Non-ALARA Zone/Area coating systems shall satisfy the following test requirements:

1.2.3.1 Coating systems for use in SC areas where abrasion will be a factor in the in-service performance of the coating system, shall be tested in accordance with ASTM D4060. The weight loss shall not exceed 175 mg per 1000 cycles when a CS-17 wheel is used with a 1000-g load.

1.2.4 Adhesion testing: Coating systems shall be tested for adhesion in accordance with the requirements of ASTM D4541 and ASTM D5144 Section 5.5.1. The minimum adhesion value shall be 200 psi for coatings applied to concrete or steel substrates.

1.2.5 Chemical resistance testing: Perform chemical resistance testing on coating systems identified for use in chemical exposure areas in accordance with the requirements of ASTM D3912 Section 6.3. The test reagents and test duration shall be governed by the anticipated service conditions. The test shall last for 5 days for SC coating systems and for coating systems where cleanup of spills will not be immediate, for 24 hours for coating systems subject to splash and spillage where cleanup will be immediate, and for 8 hours for coating systems subjected to decontamination only.

1.2.5.1 If the test duration exceeds 24 hours, examine the test specimens after each 24-hour period and report the condition of the specimens after each 24-hour interval. Examine and report the condition of the specimens in accordance with the requirements of ASTM D3912, Sections 7 and 8. The test reagents and concentrations shall be as follows:

1.2.5.1.1 Chemical Reagents and Concentrations that may require testing:

- 2.0, 5.0, and 12.2 Molar HNO_3
- 0.25, 2.0, 5.0, and 19.0 Molar NaOH
- 3.27 Molar $Sr(NO_3)_2$
- 7.4 Molar $NaNO_2$
- 4.4 Molar $NaMnO_4$

1.2.6 Test specimen preparation: Test specimens shall be prepared in accordance with the requirements of ASTM D5139, *Standard Specification for Sample Preparation for Qualification Testing of Coatings Used in Nuclear Power Plants*. The surface preparation methods utilized for radiation tolerance, adhesion, and chemical resistance testing shall be representative of those proposed for use. If more than one surface preparation method is proposed for use, each proposed surface preparation method shall be tested independently. The size of the test specimens shall be appropriate for the test being carried out. The minimum size of test specimens shall be 2" x 4" x 1/4" for steel substrates and 2" x 2" x 4" for concrete substrates.

1.2.7 Infrared (IR) scan: The coating manufacturer shall run an IR scan of the prequalification batch of each component of each coating system to maintain as a record of that formulation. The IR scans shall be maintained indefinitely for all coating systems that are accepted for use by WTP and shall be identified and submitted with the test documentation for each coating system. Thereafter, the manufacturer shall certify that each subsequent batch of an accepted coating system was manufactured with the same formulation, raw materials, production methods, and quality control standards as the coating materials originally tested and accepted for use by the WTP (refer to the statement included on the Coating Manufacturer's Product Identity Certification Record in Appendix E).

1.2.8 Flame spread and smoke developed: All SPCs that will be applied on the building structure (e.g., concrete walls, floors, ceilings, structural steel) located in the LAW, HLW, PT Facility , Lab, EMF and areas of BOF that transport, process or store radioactive materials or items shall comply with the requirements of NFPA 801, DOE Standard 1066, NFPA 255 and NFPA 253 as defined in specification 24590-WTP-3PS-AFPS-T0002 Special Protective Coating Limited-Combustible Testing Protocol. Concrete floors are required to have a minimum Critical Radiant

Flux rating of 0.45 watts/cm^2. The maximum allowable flame spread for the building structure walls and ceilings is 25 and the maximum allowable smoke developed is 50. Concrete floors, equipment, piping, steel items installed in the building do not require flame spread and smoke developed testing.

1.2.9 Volatile organic compounds (VOC): The VOC content of all SPCs shall not exceed 3.8 lbs/gal (450 g/L). If the VOC requirement in the location where the coating is being applied is less than the 3.8 lbs/gal, the local requirements take precedence and must be met.

1.2.10 Prequalification Testing for Flexible Epoxy Filler Material Acting as a Water Stop

1.2.10.1 Permeability testing of flexible epoxy filler material shall be performed in accordance with ASTM D1653, *Standard Test Methods for Water Vapor Transmission for Organic Coating Films* Method B. Permeability shall be similar to epoxy coating materials.

1.2.10.2 Radiation tolerance testing of flexible epoxy filler material shall be performed per ASTM D4082 when installed in areas where the 40-year integrated dose exposure is expected to be greater than 2E8 rads. The flexible epoxy filler shall exhibit residual flexibility and remain bonded to the substrate.

1.2.10.3 Elongation of the flexible epoxy filler material shall be at least 50% when tested in accordance with ASTM D412.

1.2.10.4 Abrasion resistance testing of flexible epoxy filler material per ASTM D4060 is not required.

1.2.10.5 Adhesion testing of the flexible epoxy filler material to concrete shall be performed in accordance with ASTM D4541 and ASTM D5144. The adhesion shall be 200 psi minimum.

1.2.10.6 Chemical resistance testing of the flexible epoxy filler material shall be performed per Section 1.2.5 above. The testing results shall be reported.

1.2.10.7 Aging shall be demonstrated by at least 10 years of successful field service in SC applications or other similar application. Accelerated aging testing may also be used such as radiation tolerance testing at 2E8 rads minimum (see Section 1.2.1 above).

1.2.10.8 Crack-filling – Due to the thick viscous nature of the flexible epoxy filler material, it is only required to be mechanically forced into the cracks, primarily bridging over the cracks creating a thick well-bonded protective barrier.

2.0 Prequalification Testing for Non-ALARA Zones/Areas

Special protective coating materials or systems that will be applied on items that will be located in non-ALARA zones/areas have the same prequalification requirements as listed in Appendix B, Section 1.0 except no radiation tolerance testing is required.

Appendix C Table 1 – Secondary Containment Coating Systems

Usage Type	Thickness Groups Concrete/ Steel	Resin Type/ Surface Type	Coating System Description	Prequalified Coating Systems						
				Ameron	Carboline	ICI-Devoe	Dudick	Inter-National	Sherwin Williams	Remarks
FLOOR COATING SYSTEMS										
SC	T4	ECF	Heavy Spray or Self Leveling Epoxy Floor Coatings (Epoxy primer and one coat of epoxy finish)	AM07	CA07	DE07	DD07	IN07	SW07	When the room finish schedule specifies system designation SC-E it includes this concrete floor coating system.
SC	T4	NCF	Heavy Spray or Self Leveling Epoxy Novolac Floor Coatings (Epoxy Novolac primer and one coat of epoxy Novolac finish)	AM08	CA08	DE08	DD08	(none)	SW08	When the room finish schedule specifies system designation SC-N it includes this concrete floor coating system.
WALL and SUMP COATING SYSTEMS										
SC	T2	ECW	Epoxy Wall & Sump Coatings (Fill bug holes flush, apply 1 coat of epoxy primer and two coats of epoxy finish)	AM15	CA15	(none)	(none)	IN15	SW15	When the room finish schedule specifies system designation SC-E it includes this concrete wall coating system.
SC	T2	NCW	Epoxy Novolac Wall & Sump Coatings (Fill bug holes flush, apply 1 coat of epoxy Novolac primer and two coats of epoxy Novolac finish)	AM16	CA16	(none)	(none)	IN16	SW16	When the room finish schedule specifies system designation SC-N it includes this concrete wall coating system.
STEEL EMBED COATING SYSTEMS										
SC	T4	ESE	Epoxy Coatings for Embed Plates and Support Steel, (Touch up existing shop coating or abrasive blast and apply two coats of Epoxy Finish)	AM19	CA19	(none)	(none)	IN19	SW19	When the room finish schedule specifies system designation SC-E it includes this steel coating system.
SC	T5	NSE	Epoxy Novolac Coatings for, Embed Plates and Support Steel (Touch up existing shop coating or abrasive blast and then apply two coats of Epoxy Novolac Finish)	AM20	CA20	(none)	(none)	IN20	SW20	When the room finish schedule specifies system designation SC-N it includes this steel coating system.
OUTDOOR SECANDORY CONTAINMENT COATING SYSTEM										
SC	T5	P	Coating system for outdoor secondary containment areas; concrete and steel	(none)	(none)	(none)	(none)	(none)	SW30	100% solids Polyurea coating

SC = Secondary Containment, ECF = Epoxy Concrete Floors; NCF = Epoxy Novolac Concrete Floors; ECW = Epoxy Concrete Walls; NCW = Epoxy Novolac Concrete Walls

ESE = Epoxy Steel Embeds; NSE = Epoxy Novolac Steel Embeds

Appendix C
Table 2 – Secondary Containment Prequalified Coating Materials

WTP Concrete System Code	Surface Type	Appendix C Table 1 Mfg. System Code	Coating Mfg.	Concrete Filler (flush)	Mfg. Products	Required Dry Film Thickness (Mils) **
SC-T4-ECF	Concrete Floors	AM07	Ameron	None	X00701 / Nu Klad 120A	1-2 / 40-60 = 41-62 mils
SC-T4-ECF	Concrete Floors	CA07	Carboline	None	Semstone 5401 / Semstone 140SL+SAND / 140SL	4-6 / 10-15 / 30-50 =44-71 mils
SC-T4-ECF	Concrete Floors	DE07	Devoe	Futura- Bond 320 Gel	Pre Prime 167/ Devmat 111	1-2 / 40-60 = 41-62 mils
SC-T4-ECF	Concrete Floors	DU07	Dudick	None	Primer 67 / Polymer Alloy 2500 FR	4-6 / 40-60 = 44-66 mils
SC-T4-ECF	Concrete Floors	IN07	International	Intercryl 320	Interseal 670HS / Interzone 954	2-4 / 45-55 = 47-59 mils
SC-T4-ECF	Concrete Floors	SW07	Sherwin Williams	Kem Cati-Cote HS or Steel-Seam FT910	Macropoxy 920 / Cor-Cote HP SL Mortar	1.5-2 / 38.5-58 = 40-60 mils
SC-T4-NCF	Concrete Floors	AM08	Ameron	None	X00701 / Nu Klad 120A / Amercoat 91	1-2 / 34-50 / 6-10 = 41-62 mils
SC-T4-NCF	Concrete Floors	CA08	Carboline	None	Semstone 5401 / 145SL+SAND / 145SL.	4-6 / 40-60 = 44-66 mils
SC-T4-NCF	Concrete Floors	DE08	Devoe	Futura- Bond 320 Gel	Pre Prime 167/ Devmat 111	1-1.5 / 40-60 = 41-61.5 mils
SC-T4-NCF	Concrete Floors	DU08	Dudick	None	Primer 67 / Polymer Alloy 2100 FR	4-6 / 40-60 = 44-66 mils
SC-T4-NCF	Concrete Floors	SW08	Sherwin Williams	Kem Cati-Cote HS or Steel-Seam FT910	Cor Cote HCR / Cor Cote HCR SL Mortar.	4-6 / 36-54 = 40-60 mils
SC-T2-ECW	Concrete Walls	AM15	Ameron	Nuclad 114A	Amerlock 400 / Amerlock 400	4-8 / 4-8=8-16 mils
SC-T2-ECW	Concrete Walls	CA15	Carboline	Semstone 195	Carbogard 1340 / Carbog890C705 / C890S800	1-2 / 4-5 / 4-5=10-14 mils
SC-T2-ECW	Concrete Walls	IN15	International	Intercyrl 320	Intergard 345 / 345 / 345	4-6 / 4-6 / 4-6=12-18 mils

WTP Concrete System Code	Surface Type	Appendix C Table 1 Mfg. System Code	Coating Mfg.	Concrete Filler (flush)	Mfg. Products	Required Dry Film Thickness (Mils) **
SC-T2-ECW	Concrete Walls	SW15	Sherwin Williams	Kem Cati-Cote HS or Steel-Seam FT910	Macropoxy 920 / Macropoxy 646 / Macropoxy 646	1-2 / 3-7 / 4 -7=8-16 mils
SC-T2-NCW	Concrete Walls	AM16	Ameron	Nu Klad 114A	Amercoat 91 / Amercoat 91	4-8 / 4-8=8-16 mils
SC-T2-NCW	Concrete Walls	CA16	Carboline	Semstone 195	Carbogard 1340 / Phenoline1205FR0700 / 1205FRS800	1-2 / 5-6 / 5-6=12-16 mils
SC-T2-NCW	Concrete Walls	IN16	International	Intercyrl 320	Intertherm 228 / 228 / 228	2-4 / 4-6 / 4-6=10-16 mils
SC-T2-NCW	Concrete Walls	SW16	Sherwin Williams	Kem Cati-Cote HS or Steel-Seam FT910	Macropoxy 920 / Phenicon HS / Phenicon HS /	1.5-2.0 / 3-7 / 4-7=8.5-16 mils

WTP Steel System Code	Surface Type	Appendix C Mfg. System Code	Coating Mfg.	Steel Primer	Mfg. Products	Required Dry Film Thickness (Mils) **
SC-T4-ESE	Steel Embeds	CA19	Carboline	*Carbozinc 859	Carbogard 890 / 890	3-5 / 4-6 / 4-6 = 11-17 mils
SC-T4-ESE	Steel Embeds	IN19	International	*Interzinc 52	Intergard 475HS / 475HS	3-5 / 4-6 / 4-6 = 11-17 mils
SC-T4-ESE	Steel Embeds	SW19	Sherwin Williams	*Zinc Clad IV	Macropoxy 646 / 646	3-5 / 4-6 / 4-6 = 11-17 mils
SC-T4-ESE*	Steel Embeds	AM19	Ameron	*Amercoat 68HS	Amerlock 385 / 385	3-5 / 4-6 / 4-6 = 11-17 mils
SC-T5-NSE	Steel Embeds	AM20	Ameron	* Amercoat 68 HS	Amercoat 91 / 91	3-5 / 6-12 / 6-12 = 15-29 mils
SC-T5-NSE	Steel Embeds	CA20	Carboline	*Carbozinc 859	Phenoline1205 / 1205	3-5 / 5-6 / 5-6 =13-17 mils
SC-T5-NSE	Steel Embeds	IN20	International	*Interzinc 52	Intertherm 228 / 228	3-5 / 4-6 / 4-6 = 13-17 mils
SC-T5-NSE	Steel Embeds	SW20	Sherwin Williams	*Zinc Clad IV	Phenicon HS / Phenicon HS	3-5 / 6-8 / 6-8 = 16-21 mils***

NOTES TO APPENDIX C Table 2

* Note 1 – This is a steel coating system shown on the room finish schedule for steel embedded in concrete and structural steel that requires the listed touch up primer and finish coating for chemical resistance. The steel coating system shall be from the same coating manufacturer as the concrete coating system.

** Note 2 – The DFT limitations listed in this column are based on testing to the NFPA 801-2003 and DOE STD 1066 flame spread and smoke developed requirements. The listed DFTs are the maximum allowed for wall coatings. The maximum total film thickness listed in this column includes the residual filler. Differences in DFT from one coating manufacturer's system to another is due to NFPA 801 and DOE STD 1066 flame and smoke independent laboratory testing results.

*** Note 3 – Using system SC-T5-NSE (SW20) from Sherwin Williams as an example, the required DFT is determined by reading from left to right, the first coat is Zinc Clad IV applied at 3-5 mils; the slash separates the second coat, which is Phenicon HS applied at 6-8 mils; the slash separates the third coat, which Phenicon HS applied at 6-8 mils. An additional slash would define a fourth coat and so on. The total DFT is listed after the equal sign.

Appendix D
Color Scheme

1.0 The finish coat on all steel items and equipment other than electrical shall be ANSI* 70 Gray or approved substitute to American National Standards Institute (ANSI) color standard. (*American National Standards Institute)

2.0 The finish coat on standard electrical components and cabinets shall be ANSI 61 Gray or approved substitute to ANSI color standard.

3.0 Finish coat on floor coatings and sumps shall match Benjamin Moore color 2143-50 Old Prairie or approved substitute.

4.0 Finish coat on wall coatings shall match Benjamin Moore color 2143-60 Moonlight White or approved substitute.

5.0 Floor coatings color shall transition over the standard coving and up the wall 6 inch (-0 inch +1 inch). The thickness on the floor/wall coving and wall above the floor coating shall match the wall coating thickness. For gypsum board walls refer to drawing 24590-WTP-A3-A10T-04200002, WTP process Building Architectural Common Interior Wall Details, using detail #4, Detail for typical rated wall base at concrete floor.

Appendix E
Coating Manufacturer's Product Identity Certification Record

Project Name: _____ Coating Manufacturer: _____
Project Number: _____ Purchase Order Number: _____
Project Location: _____ Contract Number: _____
Coating Applicator: _____ Generic Coating Type: _____
Product Name: _____ Product Number: _____

(For multi-component products, provide data for all components. Provide the standard range and actual batch values for each test)

TEST RESULTS

		Component A Batch No.		Component B Batch No.	
Test	**Test Method Used**	**Standard Range**	**Batch Actual**	**Standard Range**	**Batch Actual**
Weight per Gallon					
Viscosity					
Flash Point (Typical)					
% Solids by Volume (Typical)					
Cure to recoat time @ 50F, 70F & 90F (Typical)					
Batch Size					
Date of Mfg.					
Shelf Life					
Expiration Date					

COMMENTS:

I hereby certify that the coating materials described above were manufactured with the same formulation, raw materials, production methods, and quality control standards as the coating materials originally tested and/or accepted for use at the River Protection-Waste Treatment Plant (WTP) Project site, located in the 200 East Area of the Hanford Site in Washington State in accordance with the requirements of specifications 24590-WTP-3PS-AFPS-T0001, 24590-WTP-3PS-AFPS-T0003, 24590-WTP-3PS-AFPS-T0004 & 24590-WTP-3PS-AFPS-T0006.

Signed: _____ Date: _____
Title: _____ Company: _____

Appendix F
Surface Preparation and Coating Inspection Form

REPORT NO:_____ DATE: _____

PROJECT:_____ DAY: M T W T F S S

SUBCONTRACTOR:_____ SHIFT: _____

EQUIPMENT/AREA:_____ INSPECTOR: _____

SUBSTRATE: STEEL/CONCRETE/OTHER-_____ COATING SPEC NO/REV:_____

ENVIRONMENTAL CONDITIONS:

WORK ACTIVITY						
TIME						
DRY BULB TEMP. °F						
WET BULB TEMP. °F						
RH %						
DEW POINT °F						
SURFACE TEMP. °F						
BLOTTER TEST						

PRE-SURFACE PREPARATION:

SP-1:_____ MASKING/PROTECTION:_____ SURFACE DEFECTS:_____

SURFACE PREPARATION:

METHOD:_____ ABRASIVE TYPE/SIZE/STORAGE:_____

RECYCLED ABRASIVE OIL FLOATATION TEST:_____ABRASIVE CONDUCTIVITY TEST:_____

CLEANLINESS SPEC:_____ ACTUAL:_____PROFILE SPEC:_____ ACTUAL:_____

EQUIPMENT:_____

COATING MATERIALS & MIXING:

PRODUCT(S)_____

BATCH NO(S)/QUANTITIES/EXPIRATION DATE:_____/_____/_____

THINNERS/BATCH NO(S)/THINNING RATIO:_____/_____/_____

STORAGE:_____ MIXING: _____ INDUCTION TIME:_____

MATERIAL TEMPERATURE:_____ POT LIFE EXPIRATION TIME:_____

COATING/LINING APPLICATION START TIME:_____ FINISH TIME:_____

COAT: PRIMER/PRIMER T.U./SECOND/SECOND T.U./THIRD/THIRD T.U./OTHER

METHOD:_____ WFT:_____ RECOAT TIME/TEMP:_____ CURE TIME/TEMP:_____

EQUIPMENT:_____

APPLIED COATING:

VISUAL INSPECTION (FILM IMPERFECTIONS):_____

DRY FILM THICKNESS: SPEC:_____ ACTUAL:_____ METHOD:_____

HOLIDAY TEST:_____ METHOD:_____ OTHER TESTING:_____ METHOD:_____

TOUCH-UP AND REPAIR:_____ FINAL CURE:_____

COMMENTS: (*Use reverse side or attach extra pages*)

_____/_____
INSPECTOR'S SIGNATURE/DATE

Appendix G
Secondary Containment Installation Typical Details

- Installation Detail 1A-Floor /Wall Junction
- Installation Detail 1B-Wall/Wall Junction
- Installation Detail 2A-Reinforced Floor/Wall Junction
- Installation Detail 2B-Reinforced Wall/Wall Junction
- Installation Detail 3A-Reserved
- Installation Detail 3B-Construction Joint
- Installation Detail 4-Crack Repair
- Installation Detail 5A-Embed Plates without Steel Attachment
- Installation Detail 5B-Embed Plates with Steel Attachment
- Installation Detail 6-Perimeter Key
- Installation Detail 7-Floor or Wall Steel Embed with Stainless Steel Plate Overlay

Notes-

1. Details 1A and 1B are used for areas containing ancillary equipment with normally open floor drains, which do not contain tanks. (DWP and/or Non-DWP affecting)
2. Details 2A and 2B are for areas that do not have normally open floor drains. (DWP and/or Non-DWP affecting)
3. RESERVED
4. Detail 3B is to be used for construction joints within the limits of the SC lining. The 3B construction joint detail, formed or created (e.g., saw-cut) rectangular slot, shall be centered over the existing concrete construction joint (Refer to Section 6.2.1.4.1). (DWP and/or Non-DWP affecting)
5. Detail 4 is only to be used for large cracks other than minor shrinkage cracks. (DWP and/or Non-DWP affecting)
6. Detail 5A, 5B, 7 are to be used for embedded steel plates, angles, penetrations, etc. The perimeter of all embeds shall be chipped back and filled as shown on detail 5A. Areas containing free flowing floor drains shall use the rigid polymeric filler material. Areas that do not contain free flowing floor drains and within a flood zone shall use flexible polymeric epoxy filler material. (DWP and/or Non-DWP affecting)
7. Detail 6 is only used where the coating system terminates in the middle of a floor. (DWP and/or Non-DWP affecting)

INSTALLATION DETAIL 1A - FLOOR/WALL JUNCTION

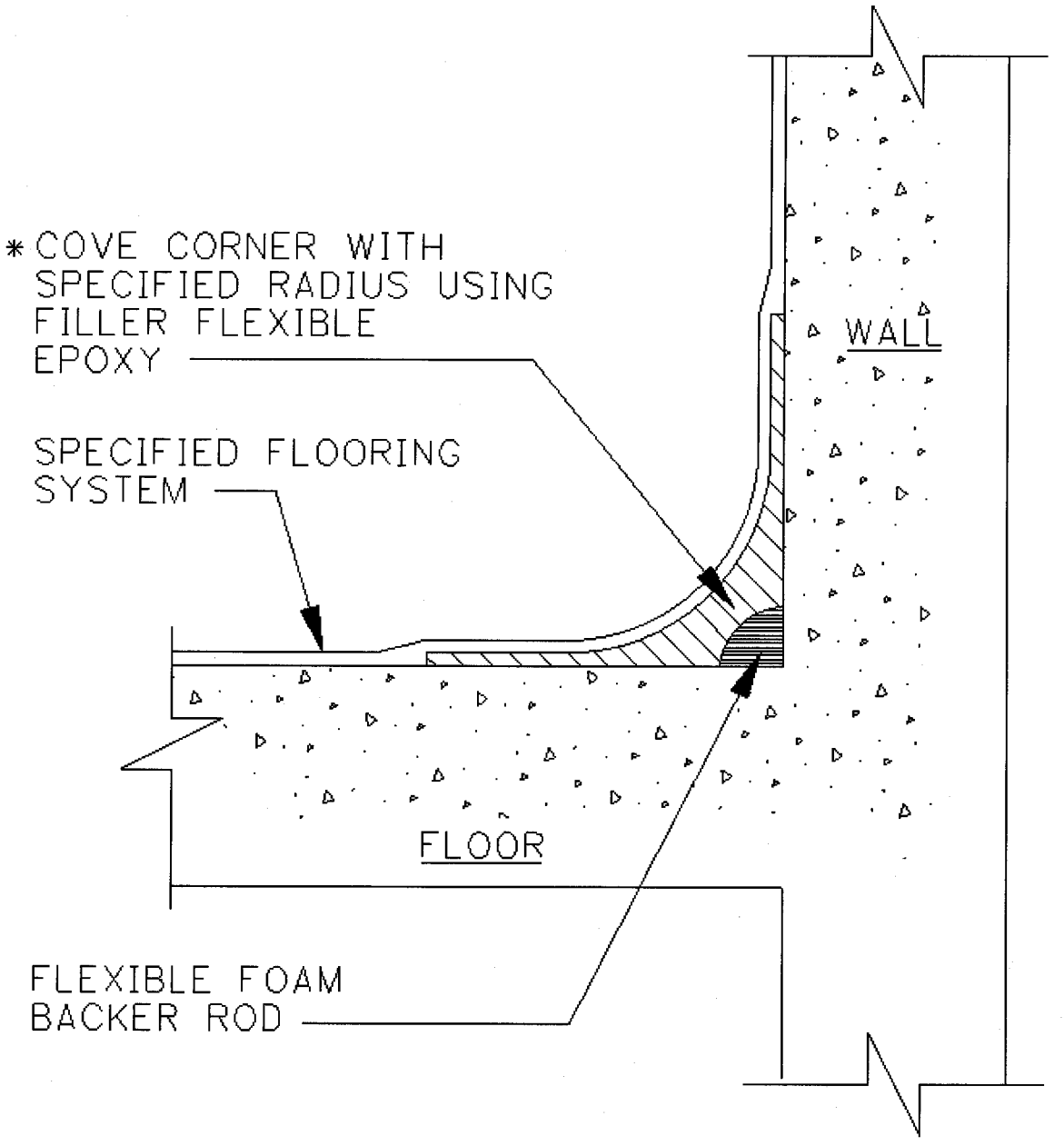

INSTALLATION DETAIL 1B - WALL/WALL JUNCTION

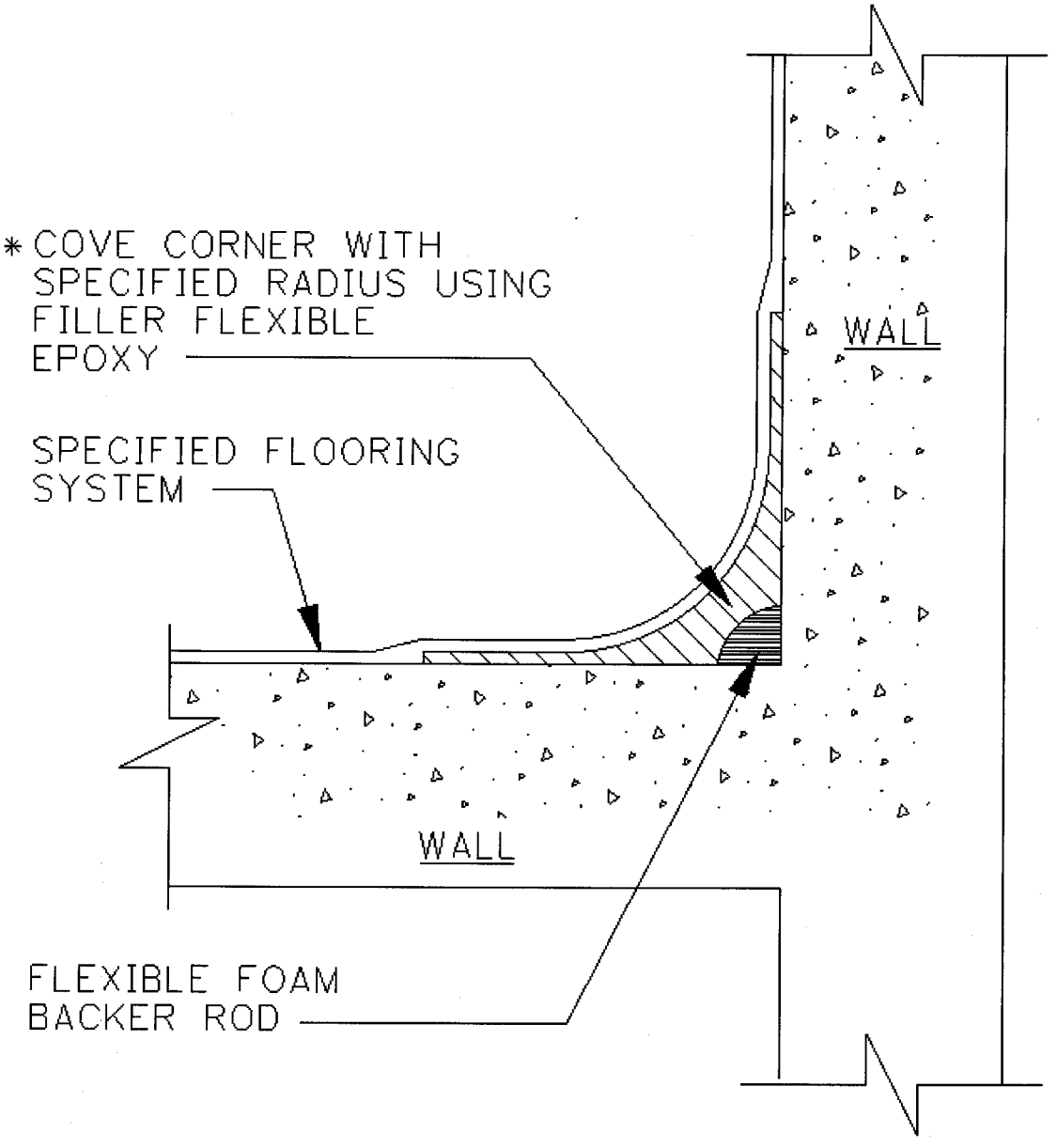

INSTALLATION DETAIL 2A
REINFORCED FLOOR/WALL JUNCTION

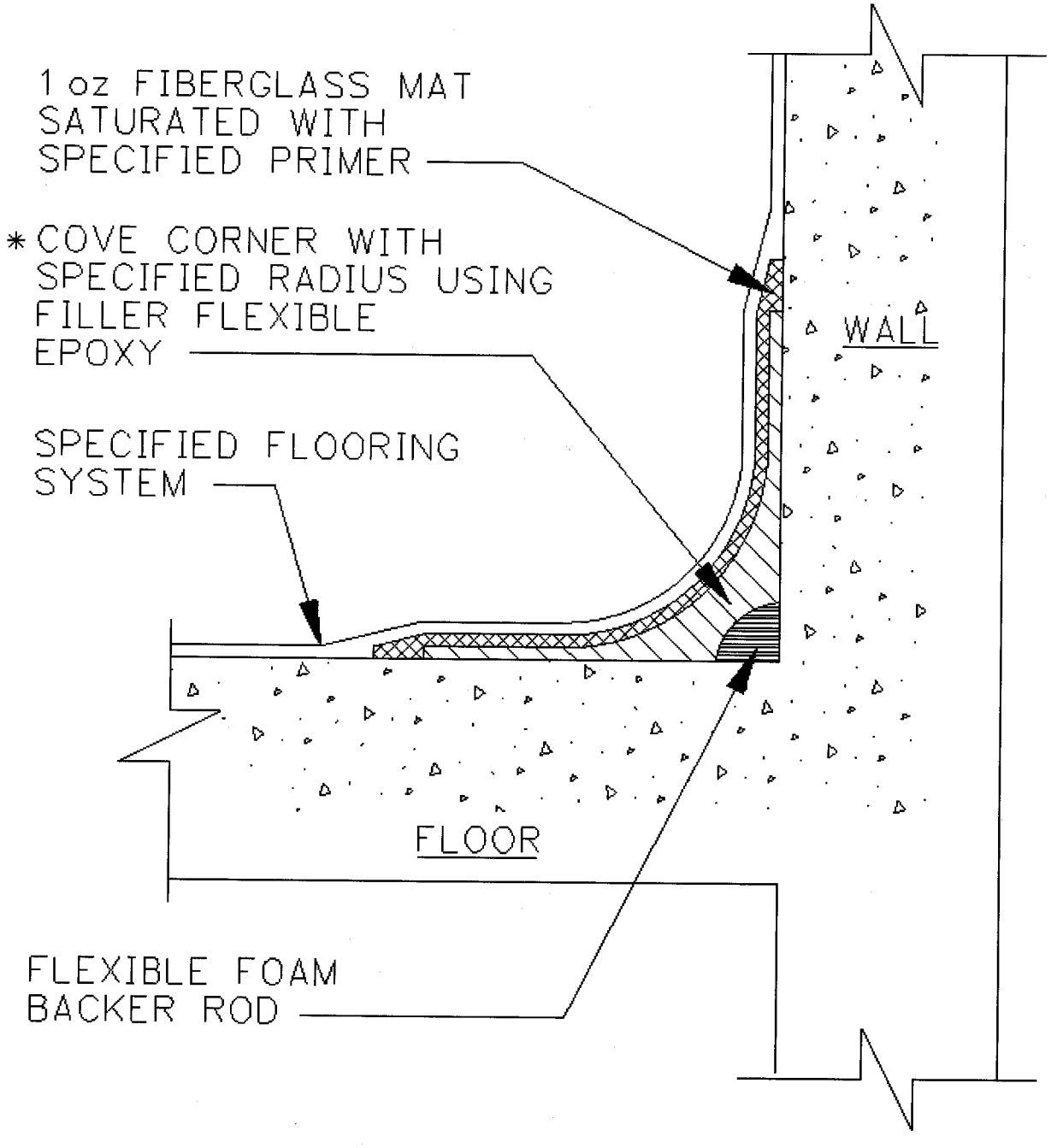

INSTALLATION DETAIL 2B
REINFORCED WALL/WALL JUNCTION

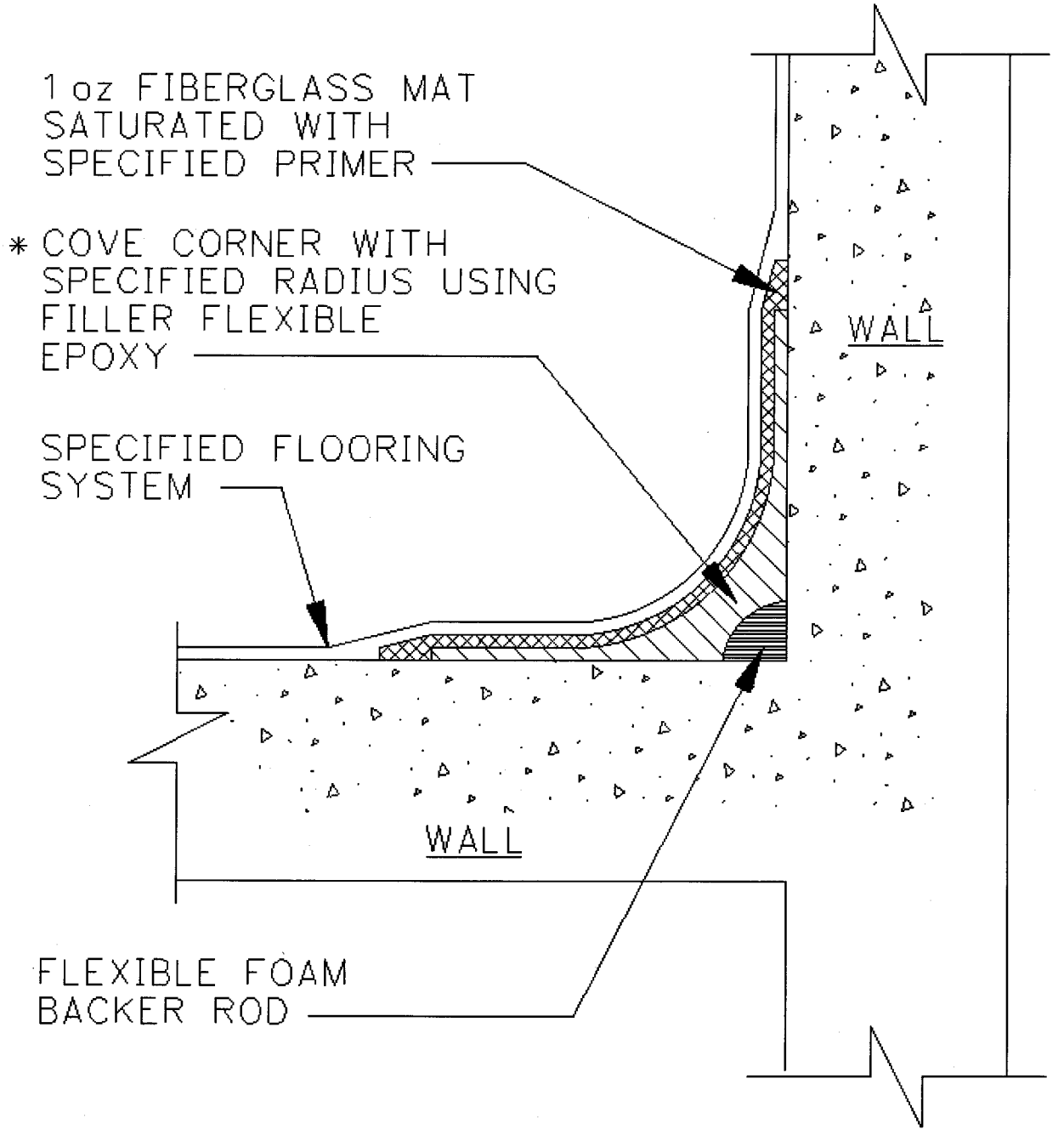

INSTALLATION DETAIL 3A – RESERVED

INSTALLATION DETAIL 3B - CONSTRUCTION JOINT

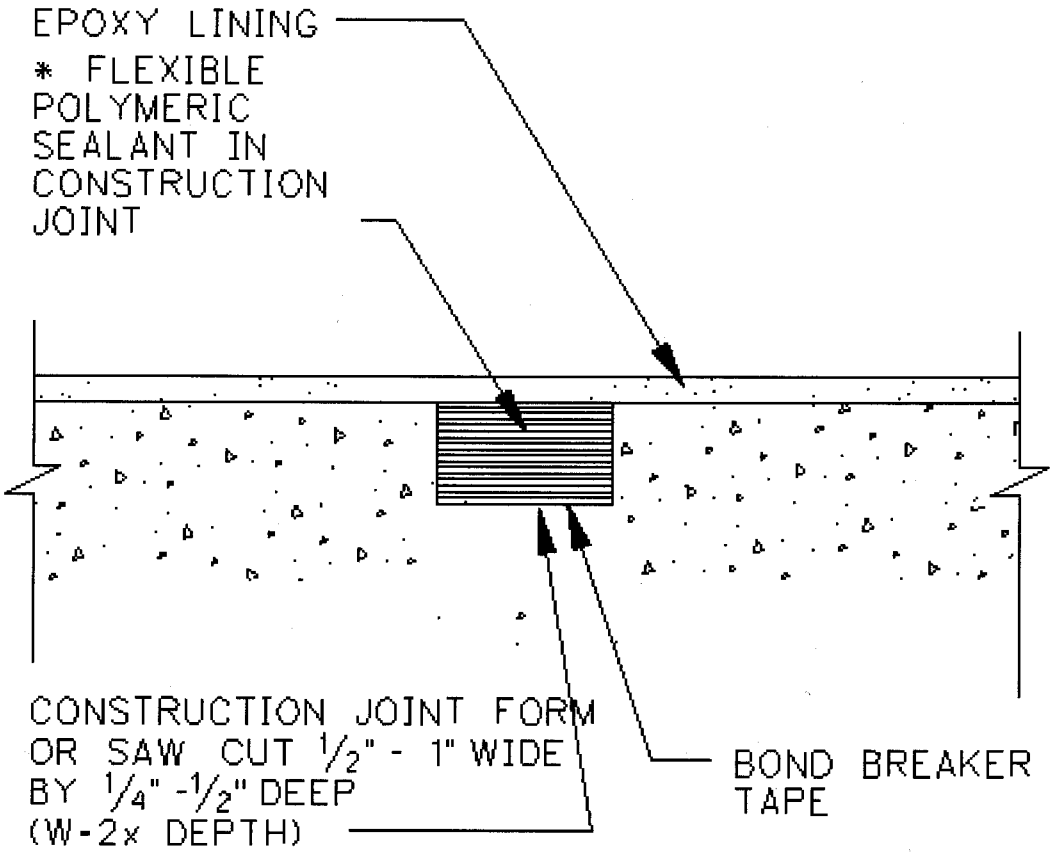

CONCRETE FLOOR/WALL

INSTALLATION DETAIL 4 - CRACK REPAIR

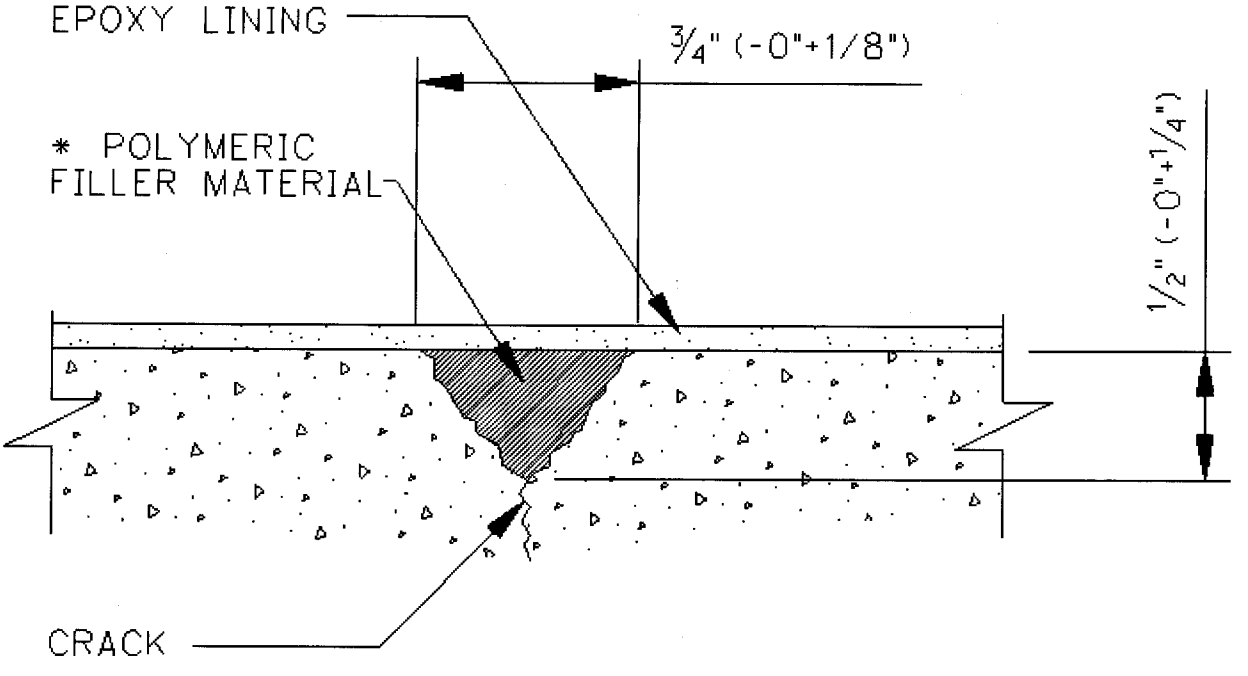

CONCRETE FLOOR/WALL

INSTALLATION DETAIL 5A - EMBED PLATES WITHOUT STEEL ATTACHMENT

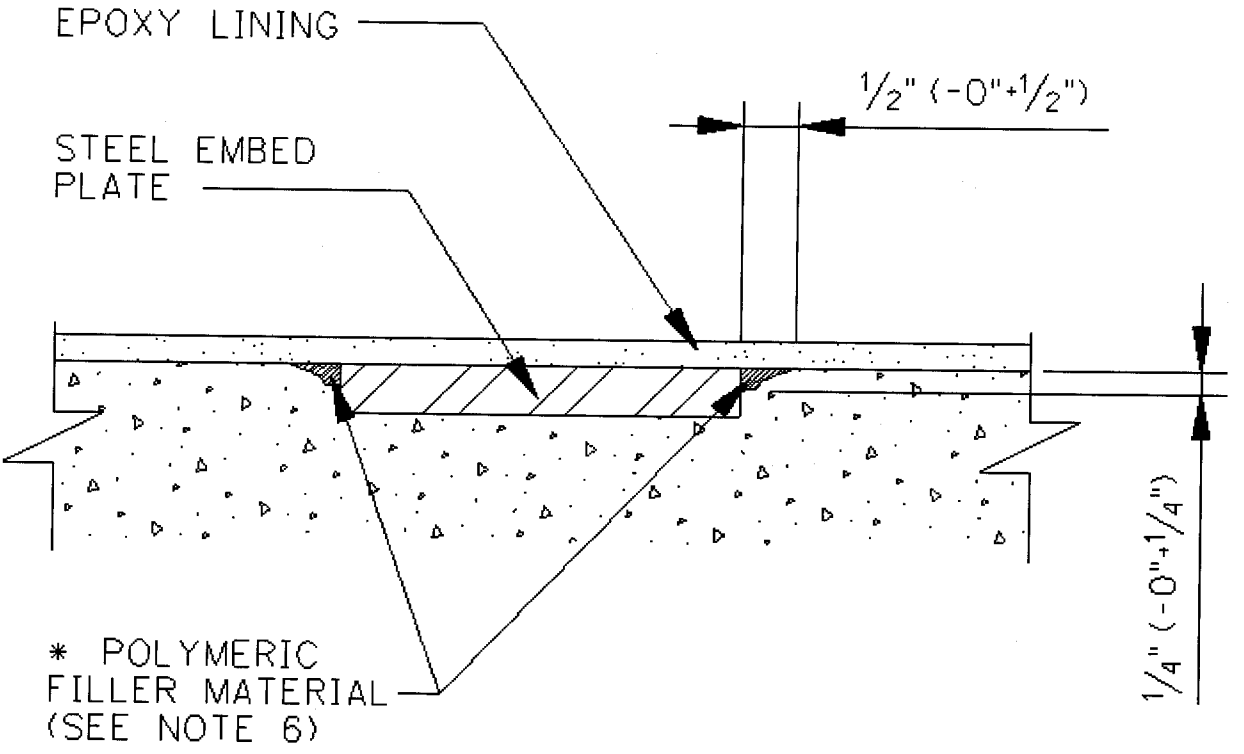

CONCRETE FLOOR/WALL

INSTALLATION DETAIL 5B - EMBED PLATES WITH STEEL ATTACHMENT

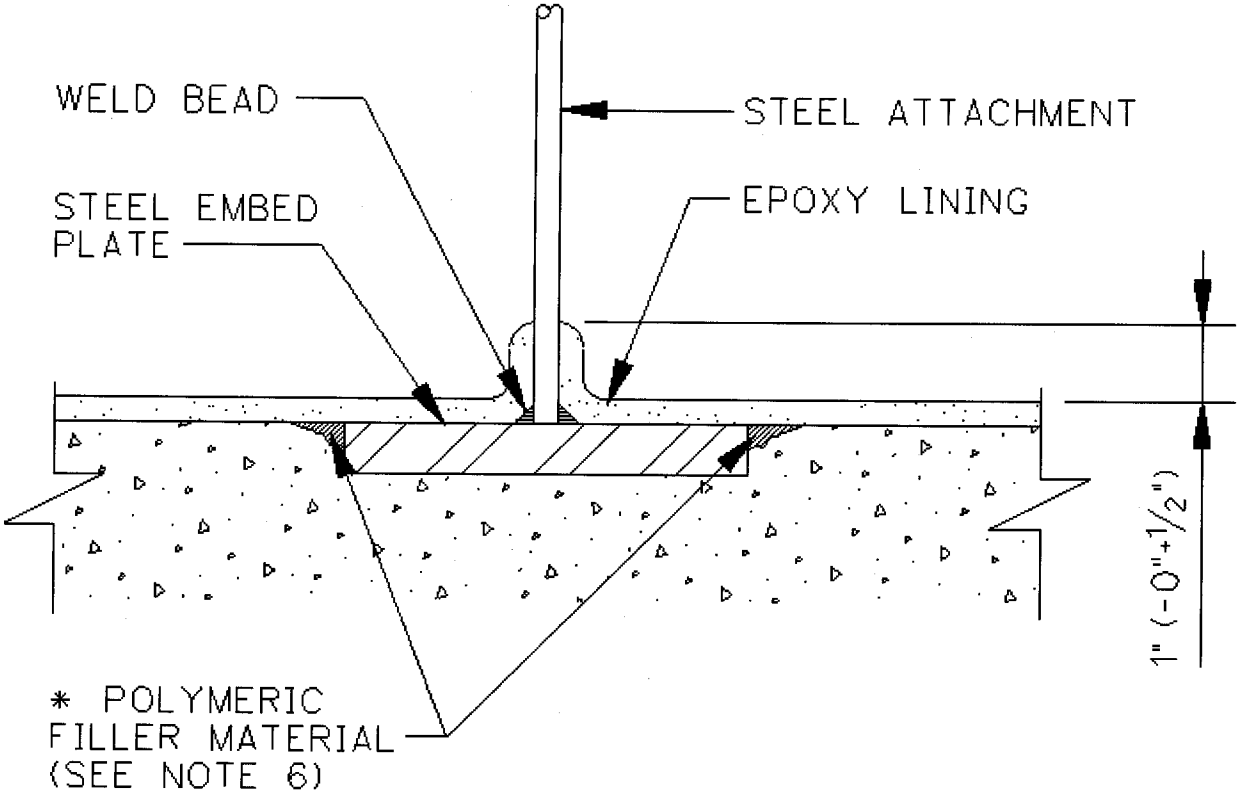

CONCRETE FLOOR/WALL

INSTALLATION DETAIL 6 - PERIMETER KEY

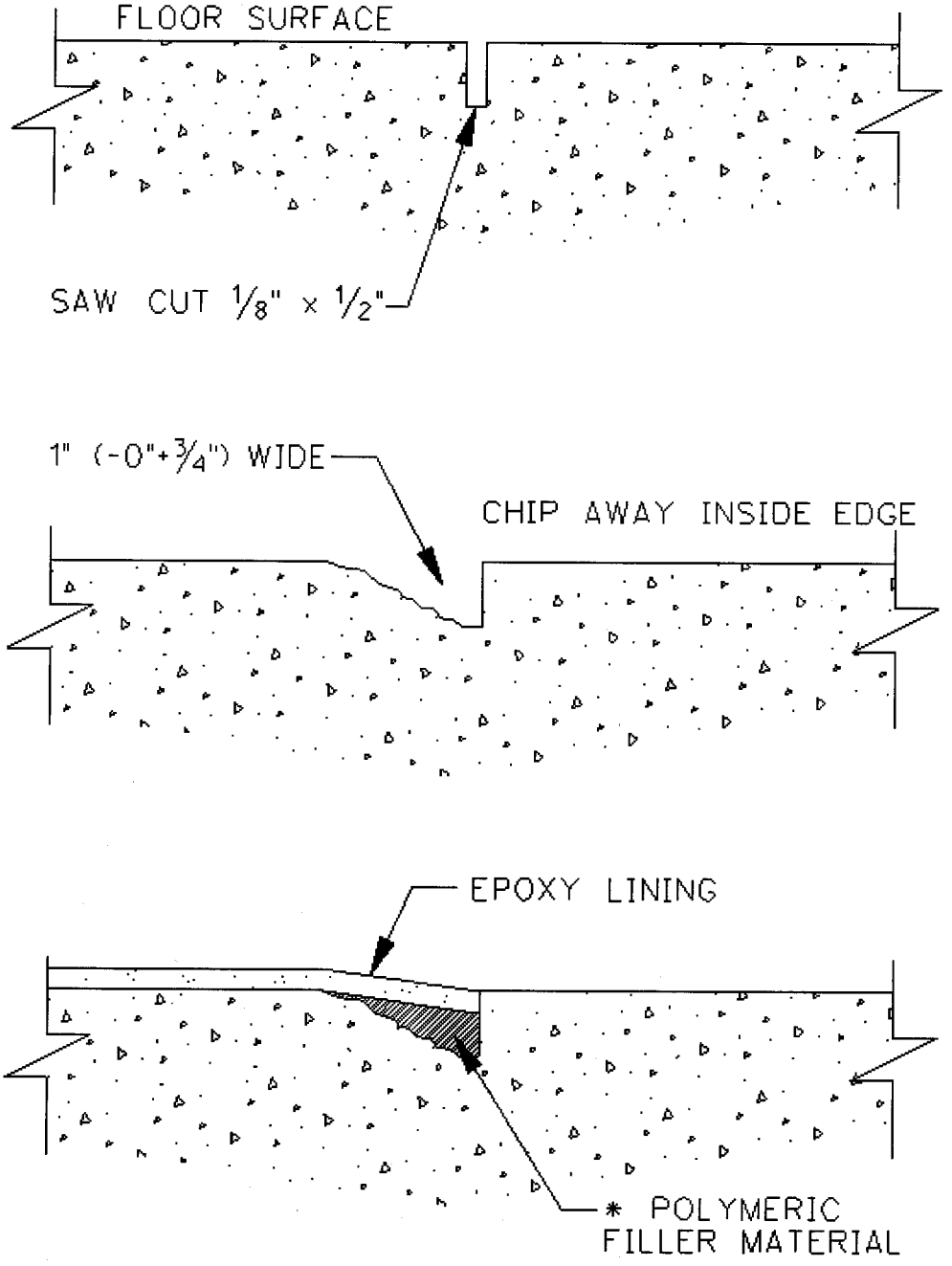

INSTALLATION DETAIL 7 - FLOOR OR WALL STEEL EMBED WITH STAINLESS STEEL PLATE OVERLAY

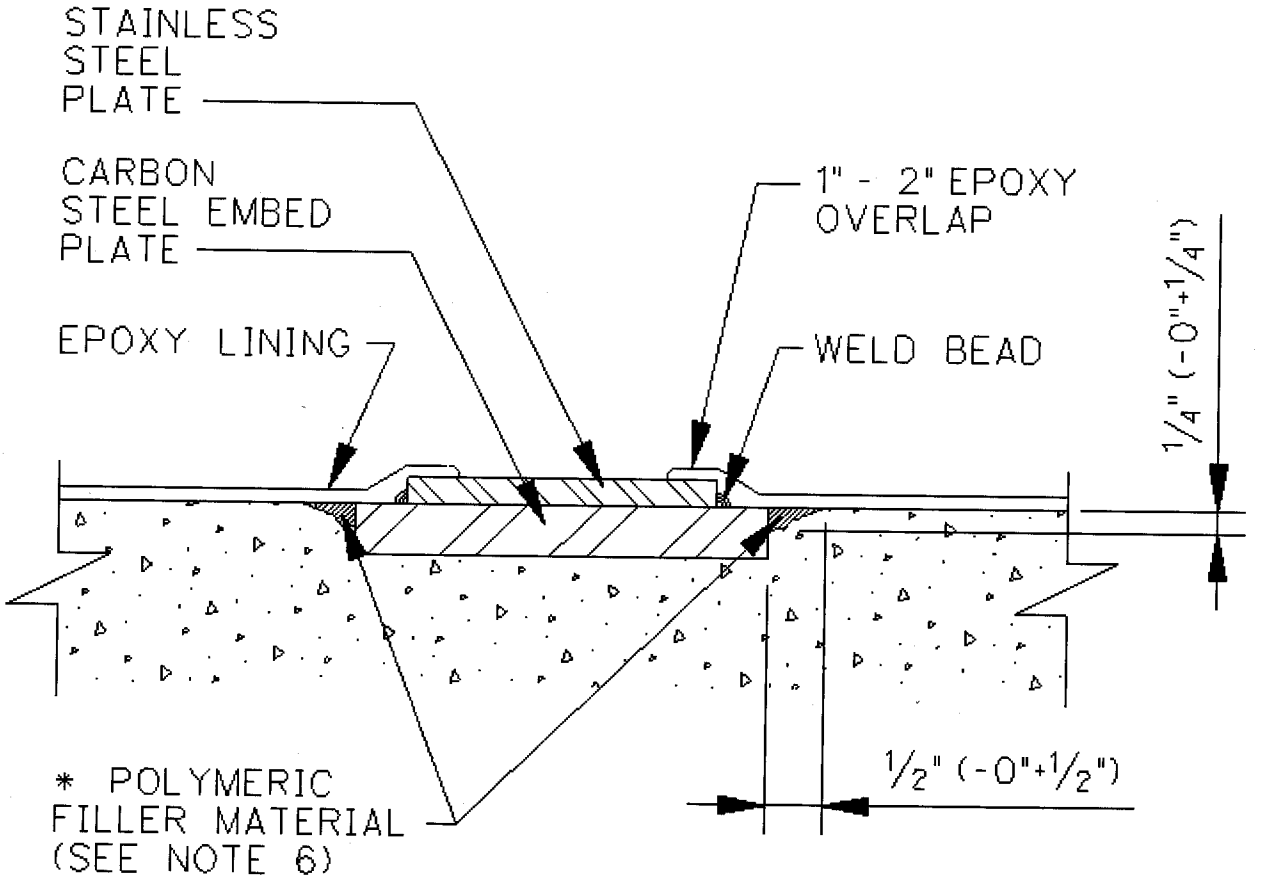

CONCRETE FLOOR/WALL

Appendix H
Interface Installation Detail Drawing References

The table below lists the drawing numbers for Secondary Containment Interface Installation Details. The latest issued revision of these drawings shall be used.

DRAWING NO.	DRAWING TITLE
24590-WTP-DD-S13T-00050	*Civil/Structural Standard Secondary Containment Coating Details Electrical Interfaces*
24590-WTP-DD-S13T-00051	*Civil/Structural Standard Secondary Containment Coating Details Embedment Interfaces*
24590-WTP-DD-S13T-00052	*Civil/Structural Standard Secondary Containment Coating Details Steel Interfaces*
24590-WTP-DD-S13T-00053	*Civil/Structural Standard Secondary Containment Coating Details Concrete Interfaces*
24590-WTP-DD-S13T-00054	*Civil/Structural Standard Secondary Containment Coating Details Mechanical Interfaces*
24590-WTP-DD-S13T-00056	*Civil/Structural Standard Secondary Containment Coating Details Commodity Support Interfaces*

DRAWINGS AND DOCUMENTS
OPERATING UNIT GROUP 10 – APPENDIX 7.9
WTP DOCUMENTS APPLICABLE TO ALL AREAS
MATERIAL SELECTION DOCUMENTATION

The documents listed in the following table are incorporated by reference into this permit and are subject to the requirements set forth in Part I Standard Conditions, Part II General Facility Conditions, and Part III Operating Unit Group 10 Conditions. Upon request, copies of the documents can be viewed at the Nuclear Waste Program Resource Center located at 3100 Port of Benton Blvd. Richland, WA. Appointments for viewing can be scheduled by calling (509) 372-7950.

Drawing/Document Number	Description
24590-WTP-PER-M-02-001, Rev 4	Material Selections for Building Secondary Containment / Leak Detection
24590-WTP-PER-M-02-002, Rev 4	Materials for Ancillary Equipment
RESERVED	RESERVED

Source documents (which do not include a "P" in the last set of numbers, e.g. "-P0001," or "-TP001") should be used in conjunction with any document change notices issued against them.

We are currently transitioning from permit documents (which do include a "P" in the last set of numbers) to source documents. At the end of the transition period, permit submittals will contain source documents and will be incorporated into the permit as described in Ecology Publication # 07-05-006.

This page intentionally left blank.

Document title: # Material Selections for Building Secondary Containment/Leak Detection

Contract number:	DE-AC27-01RV14136
Department:	Mechanical Systems
Author(s):	Debbie Adler
Principal author signature:	**Originator** By: Debbie Adler - dladler Org Name: MET Placed: Oct 18, 2016
Document number:	24590-WTP-PER-M-02-001, Rev 4
Checked by:	Ming Fang
Checker signature:	**Checked** By: Ming Fang - mfang Org Name: Becht National Inc. Placed: Oct 18, 2016
Date of issue:	
Issue status:	Issued for Permitting Use
Approved by:	Tom Erwin
Approver's position:	MET EGS
Approver signature:	Tom Erwin 10/19/16

This bound document contains a total of ~~9~~ 10 sheets 10/19/16

River Protection Project
Waste Treatment Plant
2435 Stevens Center Place
Richland, WA 99352
United States of America
Tel: 509 371 3500

Notice

Please note that source, special nuclear, and byproduct materials, as defined in the Atomic Energy Act of 1954 (AEA), are regulated at the US Department of Energy (DOE) facilities exclusively by DOE acting pursuant to its AEA authority. DOE asserts, that pursuant to the AEA, it has sole and exclusive responsibility and authority to regulate source, special nuclear, and byproduct materials at DOE-owned nuclear facilities. Information contained herein on radionuclides is provided for process description purposes only.

History Sheet

Rev	Date	Reason for revision	Revised by
0	7-1-02	Initial issue	JR Divine
1	7-11-02	Added text	JR Divine
2	8-8-02	Issued for Permitting Use	JR Divine
3	8-14-03	Clarified transfer lines source term, added AEA statement and re-Issued for Permitting Use	HM Krafft
4	8/17/16	Extensive revisions; no rev bars shown. Include the Effluent Management Facility details Additional discussion of WAC coating requirements Additional discussion of coating system for outdoor secondary containment areas Additional discussion of coatings in high pH solutions and acid leaks in the absence of waste Additional discussion of leak detection instruments Other editorial changes.	DL Adler

Contents

Notice ii
1 Introduction 1
2 Applicable Documents 1
3 Description 1
3.1 Sumps and Leak Detection Boxes 2
3.2 Coatings and Liners 3
3.3 Leak Detection 4
4 Conclusions 5

1 Introduction

The Washington Administrative Code, Chapter 173-303 WAC, *Dangerous Waste Regulations*, requires the use of leak detection and secondary containment for systems containing dangerous waste. This report discusses the use of coatings and stainless steel for use as secondary containment in the Effluent Management (EMF), High Level Waste (HLW), Low Activity Waste (LAW), Pretreatment (PT), and Laboratory (Lab) facilities. This document also describes material selection for instrumentation used in secondary containment for leak detection.

Fluids released to the secondary containment will flow to a sump or leak detection box. The fluid level in sumps will be monitored by a bubbler, a radar level detector, a thermal level detector or their combinations. Fluid levels in leak detection boxes will be monitored by a thermal level detector. Sumps that are normally dry except in off-normal situations will be constructed of ASTM A240 type 304L stainless steel or a more corrosion resistant alloy. Some of the more resistant alloys include ASTM A240 type 316L stainless steel and ASTM B688 UNS N08367 or ASTM B625 UNS N08926, 6% molybdenum (6% Mo) alloys. Primary or wet sumps that contain liquids during decontamination activities will be a 6% Mo alloy.

2 Applicable Documents

None

3 Description

After describing selected system features and operating concerns, a brief description of the corrosion factors for sumps, leak detection boxes, cell liners, and leak detectors is discussed.

System Features

- Secondary containment shall be remotely flushed after a leak is detected. Cells with secondary containment are provided with wash rings or another method to flush the cell with water or a caustic or acid solution if necessary. The flush solution flows to sumps for removal.
- Dry sumps and leak detection boxes are normally dry and will be flushed and drained after a leak is detected.
- Primary, or wet, sumps maintain a liquid level during decontamination or equipment washing operations.
- Stainless steel cell liners are used in inaccessible areas or in areas where a potential spill of waste would require a higher level of corrosion protection. Coatings may be used in areas where repair maintenance can be performed.
- The portion of the bubbler tube (leak detection) in the sump will be constructed of the same corrosion resistant material as the sump based on process conditions.
- The bubblers are fed with dry process air or instrument air, dew point of 40 degrees below 0 Fahrenheit (-40 °F).
- Airflow rates are sufficiently small that aerosols formed by the air bubbling through the liquid and that could deposit on the probe surfaces will not form.

- The resistance temperature detector (RTD) enclosures for thermal level detector in secondary containment will be constructed of the same material as the secondary containment.
- Depending on the design, the radar level detector wave-guide may or may not contact the liquid. Any portion of the wave-guide below the top of the sump will be constructed of the same material as the sump. If process conditions require it, a more corrosion resistant alloy will be used.
- Multiple leak detection instrumentation may be installed if a lack of maintenance access after the start of operations is expected.

Considerations:

Several factors must be considered in specifying the materials of construction. These include temperature, lifetime dose, expected chemistry including pH (the negative logarithm of the hydrogen ion activity), and time of exposure.

Temperature - Most regions in the five facilities will operate in the 75 °F to 125 °F range with an upper limit of 150 °F. In exceptional regions, associated with the melters, air temperatures can significantly exceed 300 °F. Melter cell liner temperatures will be maintained at significantly less than 300 °F due to the cell ventilation systems

Radiation – The 40 year integrated gamma radiation dose within the PT Facility are estimated to be as high as 26 x 10^9 rad, though most locations are less. The highest expected 40-year dose rate in waste transfer lines is between the PT Facility and the HLW Facility. The dose rate for the PT Facility to HLW Facility transfer line is estimated to be less than 6 x 10^7 rad based on a bounding assumption that the transfer line is full of waste at all times.

pH - The pH within process vessels can vary depending on the operation. Process solutions range from 50% sodium hydroxide to about 40% nitric acid; although no vessel is expected to be exposed to the entire range of pH values.

Time of Exposure – Time of exposure will affect the degree of uniform corrosion that can occur. Because pitting and cracking generally have some degree of incubation period, short exposures to potentially corrosive conditions may not have an effect.

3.1 Sumps and Leak Detection Boxes

Sumps are either dry sumps or primary (wet) sumps. Sumps, except for primary (wet) sumps are normally dry, and will be flushed and drained in the event of spill. Dry sumps will only receive effluent from a spill, a maintenance decontamination event, or, in the case of outside sumps, occasional precipitation. In accordance with the WAC and DWP permit conditions, the contents of the sump must be removed within 24 hours, or as practicable, and be flushed. Under these conditions, dry sumps may be constructed of type 304L stainless steel or more corrosion resistant alloys, including type 316L stainless steel and 6% Mo alloys.

Primary (wet) sumps will normally have liquid present during equipment decontamination operations. Because of uncertainties about the chemistry of the solutions in the sump, evaporation rates, and the effects at the liquid/air interface, the primary sumps will be constructed of a 6% Mo alloy.

Leak detection boxes collect a leak in the annular space of double-walled or coaxial piping and are normally dry. Leak detection boxes may be constructed of type 304L stainless steel or more corrosion resistant alloys, such as type 316L stainless steel and 6% Mo alloys.

3.2 Coatings and Liners

3.2.1 Special Protective Coatings

The WAC requires that dangerous waste permit (DWP) secondary containment areas be provided with an impermeable coating that is compatible with the stored waste in order to prevent the migration of waste into the concrete.

Both mechanical and chemical factors are important in the selection of special protective coatings. The mechanical factors include foot traffic, fork lift operation, and dropping of or installation of equipment. The chemical effects include, but are not limited to, pH, radiation, and temperature.

Novolac type epoxies are available that can withstand temperatures to about 300 °F, lifetime doses to about 2×10^8 rad, and concentrated caustic or nitric acid for several hours.

The combined effects of pH, temperature, and radiation on coatings are not well defined but would be expected to reduce the useful life. No situation is expected where temperatures above 300 °F will be combined with pH extremes.

Coating system for outdoor secondary containment areas (concrete) shall be comprised of polyurea (100% solid) to protect epoxy coating from degradation due to atmospheric (UV) exposure.

A shorter exposure of coatings to any of above conditions have minimal impact on coating life. Exceeding any of the above conditions requires access for maintenance of the coating. Coating are inspected regularly in accordance with WAC and DWP requirements.

To determine the level of protection needed, several leak options are evaluated:

High pH solutions
All of the suggested coatings are subject to damage if there is extended exposure to strong caustic. If exposure is greater than 5 days, surfaces should be flushed and evaluated for damage.

Acid leaks in the absence of waste
Coatings can be used if they can be washed within 5 days. Otherwise, they could be damaged by long-term exposure (greater than several days depending on the concentration) to nitric acid. After such exposure, the coating should be flushed and evaluated for damage. Where failure of the coating could lead to exposure of concrete to acid solutions, coatings are not recommended.

Water leaks in the absence of waste
Coatings are acceptable, except in high radiation areas where human access for performing coating maintenance is not possible.

Acid or water (pH < 12) leak with waste present
As noted above for acid leaks, coatings are not recommended except where maintenance is feasible. Leaks at pH values near or less than 0 are of primary concern.

3.2.2 Stainless Steel liners

To determine the level of protection needed, several leak options are evaluated:

High pH solutions
Type 304L stainless steel is resistant to caustic solutions.

Acid leaks in the absence of waste
Type 304L stainless steel is specified as the liner material. The corrosion resistance of type 304L is very effective for nitric acid exposure in secondary containment areas.

Water leaks in the absence of waste
In the absence of waste, no failure of the type 304L liner is expected.

Acid or water (pH < 12) leak with waste present
With type 304L stainless steel, flushing within a day of the leak is preferred. However, as the temperature of any leaking fluid on the liner will be much lower than that in the pipe or vessel, no accelerated corrosion of the liner is anticipated. Further, because in a typical fabrication the weld is considered to be more prone to defects that result in leaks, vacuum box testing will be conducted on liner plate welds as a precautionary measure to ensure weld integrity and eliminate potential leakage to the concrete.

3.3 Leak Detection

Should a leak occur, the fluids will flow to the sumps where instrumentation such as radar level detectors, bubblers, or thermal level detectors will detect the liquid in the sump or leak detection box. Bubbler tips, radar wave guides and thermal detectors will be exposed to the solution in the event of a leak. Factors considered in reviewing the probe performance are:

- external environment
- internal environment
- immersion environment
- duration of immersion

The external environment of both probe types above the liquid level and the internal environment of the wave-guides and thermal level detector is air, which is benign. The internal environment for bubblers is dry air and is extremely benign. The bottom of the thermal level detector tip is completely sealed. The internal surface of the probe for this type of instrumentation is not expected to be wetted by the leaked liquid. The wetted portion of immersed probe will be in the same solution as the sump in which it is located.

3.3.1 Leak Detection Instruments in Dry Sumps and Leak Detection Boxes

The probability that leak detection instruments will be in contact with leaked solution is very low because the liquid is confined by the primary vessel or piping containment. Liquid is not normally present except in the event of a spill or during maintenance decontamination of the cell or process area. The impact of the immersion of the wave guide, bubbler, and thermal level detector will be further minimized by spill response procedures and actions required to respond and remove sump liquids.

As described in the bullets in Section 3 above, sumps and leak detection box are normally dry, and will be flushed and drained in the event of spill. Sumps will only receive effluent from a spill, a maintenance decontamination event, or, in the case of outside sumps, occasional precipitation. In accordance with the WAC and DWP permit conditions, the contents of the sump or leak detection box must be removed within 24 hours, or as practicable.

In the course of any of these evolutions, the effluent will be removed and the sump and its associated leak detection instrument will be flushed and drained. After leaked or spilled liquid has been removed, the wetted area of leak detection instrument will be washed by the secondary containment flushing and draining process. Therefore, the residual chemical build up at wetted portions of the instruments is not expected.

The only time leak detectors may be subjected to corrosion is the time between liquid reaching the detector, and the time that the flushing or draining process is complete. This time period is limited and even a moderate level of corrosion is not expected.

Material selection for dry secondary containment level detection systems is reviewed and approved by MET prior to procurement. At that time of that review, a decision is made regarding the selection of more corrosive resistant materials.

3.3.2 Leak Detection Instruments in Primary or Wet Sumps

Primary or wet sumps have limited application at WTP. There are five primary sumps located in the PT Facility hotcells to support equipment decontamination and flushing. Primary sumps contain fluids during equipment decontamination operations and are located within a secondary containment sump. Both the primary and secondary containment sumps are provided with leak detection. Since the leak detectors in primary sumps have more potential to be wetted, more corrosion resistant materials are recommended for the portions in contact with liquid.

Material selection for primary sump level detection systems is reviewed and approved by MET prior to procurement. At the time of that review, a decision is made regarding the selection of more corrosive resistant materials.

4 Conclusions

- Cell special protective coatings or stainless steel liners are required as part of secondary containment.
- Coatings are not used as process cell liners unless they can be maintained.
- Type 304L stainless steel is acceptable for process and vessel cell liners because it is compatible with the expected temperature and radiation limits.
- Dry sumps and leak detection boxes will be constructed of type 304L or 316L stainless steel, or 6% Mo alloy.
- Primary sumps are constructed of a 6% Mo alloy.
- The leak detectors used in dry sumps will be constructed with same material as the sump or leak detection box.
- If process conditions will result in the frequent immersion of the radar wave-guides, a more corrosion resistant alloy such as 6% Mo is used.
- A more corrosion resistant material is recommended for the leak detector used in primary or wet sumps.

- Corrosion of the wave guide, bubbler, and thermal level detector by immersion will be further minimized by spill response procedures.
- Spills will be removed from sumps and leak detection boxes within 24 hours, or as practicable in accordance with WAC and Dangerous Waste Permit requirements

WASTE TREATMENT AND IMMOBILIZATION PLANT
APPENDIX 13.0

CHANGE CONTROL LOG

Change Control Logs ensure that changes to this unit are performed in a methodical, controlled, coordinated, and transparent manner. Each unit addendum will have its own change control log with a modification history table. The "**Modification Number**" represents Ecology's method for tracking the different versions of the permit. This log will serve as an up to date record of modifications and version history of the unit.

Modification History Table

Appendices	Modification Date	Modification Number
Appendix 13.0	09/05/2017	8C.2017.6F
Appendix 13.1	09/05/2017	8C.2017.6F
Appendix 13.2	09/05/2017	8C.2017.6F
Appendix 13.3		
Appendix 13.4	09/05/2017	8C.2017.6F
Appendix 13.5		
Appendix 13.6		
Appendix 13.7		
Appendix 13.8		
Appendix 13.9		
Appendix 13.10		
Appendix 13.11	09/05/2017	8C.2017.6F
Appendix 13.12		
Appendix 13.13	09/05/2017	8C.2017.6F
Appendix 13.14		
Appendix 13.15		
Appendix 13.16		
Appendix 13.17		
Appendix 13.18	09/05/2017	8C.2017.6F

This page intentionally left blank.

OPERATING UNIT GROUP 10
APPENDIX 13.0

This page intentionally left blank.

OPERATING UNIT GROUP 10
APPENDIX 13.0

Where information regarding treatment, management, and disposal of the radioactive source, byproduct material, and/or special nuclear components of mixed waste (as defined by the Atomic Energy Act of 1954, as amended) has been incorporated into this permit, it is not incorporated for the purpose of regulating the radiation hazards of such components under the authority of this permit and chapter 70.105 Revised Code of Washington (RCW). In the event of any conflict between Permit Condition III.10.A and any statement relating to the regulation of source, special nuclear, and byproduct material contained in portions of the permit application that are incorporated into this permit, Permit Condition III.10.A will prevail.

This page intentionally left blank.

DRAWINGS AND DOCUMENTS
OPERATING UNIT GROUP 10 – APPENDIX 13.1
EFFLUENT MANAGEMENT FACILITY PROCESS FLOW DIAGRAMS

The documents listed in the following table are incorporated by reference into this permit and are subject to the requirements set forth in Part I Standard Conditions, Part II General Facility Conditions, and Part III Operating Unit Group 10 Conditions. Upon request, copies of the documents can be viewed at the Nuclear Waste Program Resource Center located at 3100 Port of Benton Blvd., Richland, WA. Appointments for viewing can be scheduled by calling (509) 372-7950.

Drawing/Document Number	Description
24590-BOF-M5-V17T-00011, Rev 0	Process Flow Diagram - Direct Feed Effluent Transfer (System DEP)
24590-BOF-M5-V17T-00012, Rev 0	Process Flow Diagram – Direct Feed Effluent Evaporator (System DEP)
24590-BOF-M5-V17T-00013, Rev 0	Process Flow Diagram – Direct Feed Concentrate Transfer (System DEP and DVP)
24590-BOF-M5-V17T-00014, Rev 0	Process Flow Diagram – Direct Feed Process Condensate Transfer (System DEP)
RESERVED	RESERVED

Source documents (which do not include a "P" in the last set of numbers, e.g. "-P0001," or "-TP001") should be used in conjunction with any document change notices issued against them.

We are currently transitioning from permit documents (which do include a "P" in the last set of numbers) to source documents. At the end of the transition period, permit submittals will contain source documents and will be incorporated into the permit as described in Ecology Publication #07-05-006.

This page intentionally left blank.

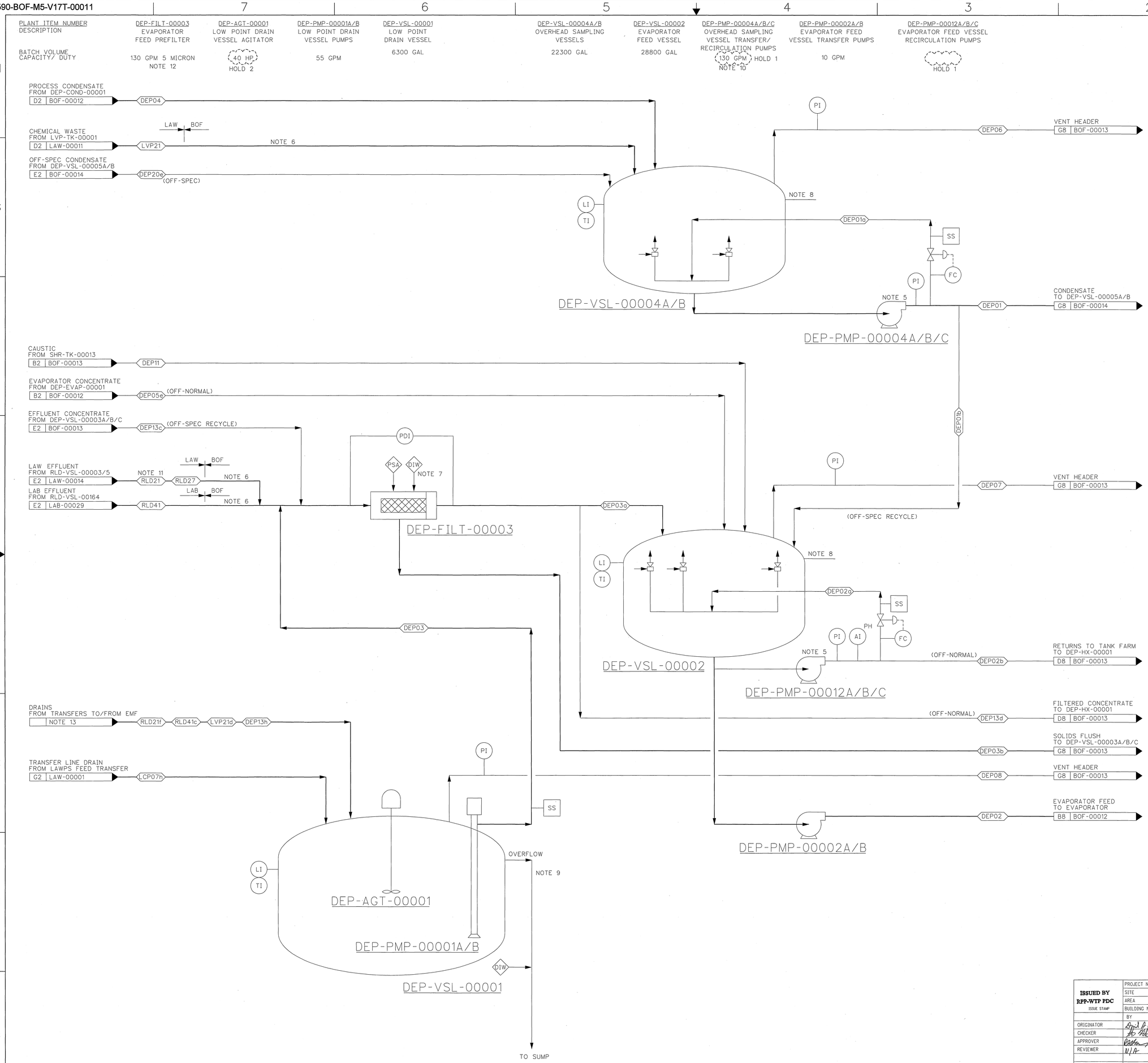

NOTES:

1. SEE DRAWING 24590-WTP-M5-V17T-00001 FOR GENERAL NOTES AND SYMBOLS AND LEGEND.
2. CONTENTS OF THIS DOCUMENT ARE DANGEROUS WASTE PERMIT AFFECTING.
3. ONLY MAJOR INDICATION AND CONTROL INSTRUMENTATION SHOWN.
4. STREAM TABLES FOR SYSTEMS DEP AND DVP PROVIDED ON 24590-BOF-M3-V17T-00001001 AND -00001002.
5. DEP-PMP-00004A/B/C AND DEP-PMP-00012A/B/C ARE RATED FOR 2 X 50% NORMAL OPERATIONS.
6. EACH TRANSFER LINE REQUIRES DRAIN BACK TO THE LOW POINT DRAIN VESSEL, DEP-VSL-00001.
7. BACKFLUSH PROVIDED BY PROCESS CONDENSATE (PREFERRED) OR DIW. FILTER AND SOLIDS REQUIRE CONTAMINATED SOLID MATTER DISPOSAL.
8. OVERFLOW TO LOW POINT DRAIN VESSEL, DEP-VSL-00001.
9. DEP-VSL-00001 OVERFLOW PASSES THROUGH A LOOP SEAL WITH LEVEL INDICATION AND DIW MAKE-UP.
10. BATCH TRANSFER RATE IS 130 GPM. REQUIRED RECIRCULATION RATE TO BE DETERMINED BY VENDORS. SEE HOLD/OPEN ITEMS.
11. RLD21 AND RLD27 TRANSFER FROM LAW THROUGH THE SAME LINE AT SEPARATE TIMES WITHOUT BLENDING. TRANSFER OF RLD27 IS AN OFF-NORMAL OCCURRENCE.
12. TRANSFER RATE FROM RLD-VSL-00005 PROVIDES THROUGHPUT FOR DEP-FILT-00003.
13. TRANSFER LINE DRAINS FOR TRANSFERS FROM LVP-TK-00001, RLD-VSL-00003/5, RLD-VSL-00164, AND DEP-VSL-00003A/B/C.

HOLD/OPEN ITEMS:

1. PUMP SIZING FOR RECIRCULATION RATE TO BE DETERMINED BY VENDOR.
2. DEP-AGT-00001 HORSEPOWER BASED UPON LCP-VSL-00001 AGITATOR DESIGN. DEP-AGT-00001 FINAL HORSEPOWER TO BE DETERMINED BY VENDOR.

REFERENCES:

1. 24590-BOF-3ZD-25-00001, WTP DIRECT FEED LOW ACTIVITY WASTE (DFLAW) FACILITY AND SYSTEM DESIGN DESCRIPTIONS.
2. 24590-WTP-RPT-PR-01-008, PROCESS STREAM NUMBERS.
3. 24590-WTP-RPT-ENG-02-009, SYSTEM AND AREA LOCATORS LIST AND SYSTEM DIVISION OF RESPONSIBILITY.
4. 24590-WTP-RPT-ENG-02-010, COMPONENT IDENTIFIERS LIST.
5. 24590-BOF-MVC-DEP-00009, BATCH SIZING CALCULATION FOR DEP (DIRECT FEED LAW EFFLUENT MANAGEMENT FACILITY PROCESS SYSTEM) VESSELS: DEP-VSL-00001, -00002, -00003A/B/C, -00004A/B, -00005A/B.
6. 24590-BOF-MVC-DEP-00007, PROCESS DATA FOR OVERHEAD SAMPLING VESSELS (DEP-VSL-00004A/B) AND PUMPS (DEP-PMP-00004A/B/C).
7. 24590-BOF-MVC-DEP-00003, PROCESS DATA FOR EVAPORATOR FEED VESSEL (DEP-VSL-00002), TRANSFER PUMPS (DEP-PMP-00002A/B), AND RECIRCULATION PUMPS (DEP-PMP-00012A/B/C).
8. 24590-BOF-MVC-DEP-00011, PROCESS DATA FOR THE LOW POINT DRAIN VESSEL, DEP-VSL-00001, AND PUMPS, DEP-PMP-00001A/B.
9. 24590-LAW-MVC-RLD-00007, PROCESS DATA INPUT FOR LAW SBS CONDENSATE COLLECTION VESSEL, RLD-VSL-00005, AND DISCHARGE PUMPS (RLD-PMP-00003A/B).

Please note that source, special nuclear, and byproduct materials, as defined in the Atomic Energy Act of 1954 (AEA) are regulated at the U. S. Department of Energy (DOE) facilities exclusively by DOE acting pursuant to its AEA authority. DOE asserts that pursuant to AEA, it has sole and exclusive responsibility and authority to regulate source, special nuclear, and byproduct materials at DOE-owned nuclear facilities. Information contained herein on radionuclides is provided for process description purposes only.

REVISION HISTORY

REV	DESCRIPTION	ORG	CHKD	RVWD	APVD	DATE
0	ISSUED FOR DESIGN	DJC	SN	N/A		3/24/16

ISSUED BY RPP-WTP PDC ISSUE STAMP

PROJECT No.	24590	
SITE	HANFORD	
AREA	200E	
BUILDING No.	25	
	BY	DATE
ORIGINATOR		3/24/16
CHECKER		3/24/16
APPROVER		3/24/16
REVIEWER	N/A	

CONTENT APPLICABLE TO ALARA? [X] YES [ ] NO
ADR NO. 24590-BOF-ADR-PR-15-0001 REV: 0

BECHTEL
RIVER PROTECTION PROJECT
WASTE TREATMENT PLANT
2435 STEVENS CENTER PLACE
RICHLAND, WA 99354

CONTRACT No: DE-AC27-01RV14136

PROCESS FLOW DIAGRAM DIRECT FEED EFFLUENT TRANSFER (SYSTEM DEP)

SCALE: NONE

24590-BOF-M5-V17T-00011

REV 0

R11777521

FORM E_SDN.DGN 02/2009

"E" SIZE - 44x34
COMPUTER GENERATED - MANUAL DESIGN CHANGES NOT PERMITTED

3/18/2016 3:06:38 PM

PLOTTED BY: tcsanvic

c:\work\tcsanvic\dms25225\24590-BOF-M5-V17T-00011.dgn

PLANT ITEM NUMBER DESCRIPTION	DEP-COND-00002 DEP EVAPORATOR INTER-CONDENSER	DEP-COND-00003 DEP EVAPORATOR AFTER-CONDENSER	DEP-RBLR-00001 DEP EVAPORATOR REBOILER	DEP-PMP-00017 DEP EVAPORATOR RECIRCULATION PUMP	DEP-FILT-00004A/B CONDENSATE DUPLEX CARTRIDGE FILTERS	DEP-EVAP-00001 DEP EVAPORATOR SEPARATOR VESSEL	DEP-COND-00001 DEP EVAPORATOR PRIMARY CONDENSER	DEP-PMP-00006A/B DEP EVAPORATOR CONDENSATE PUMPS	DEP-PMP-00007A/B EVAPORATOR CONCENTRATE DISCHARGE PUMPS
BATCH VOLUME CAPACITY/ DUTY	426000 BTU/HR	167000 BTU/HR	5.16 MMBTU/HR	3500 GPM HOLD 1	10 GPM 1.0 MICRON	1200 GAL HOLD 1	5.00 MMBTU/HR	10 GPM	10 GPM

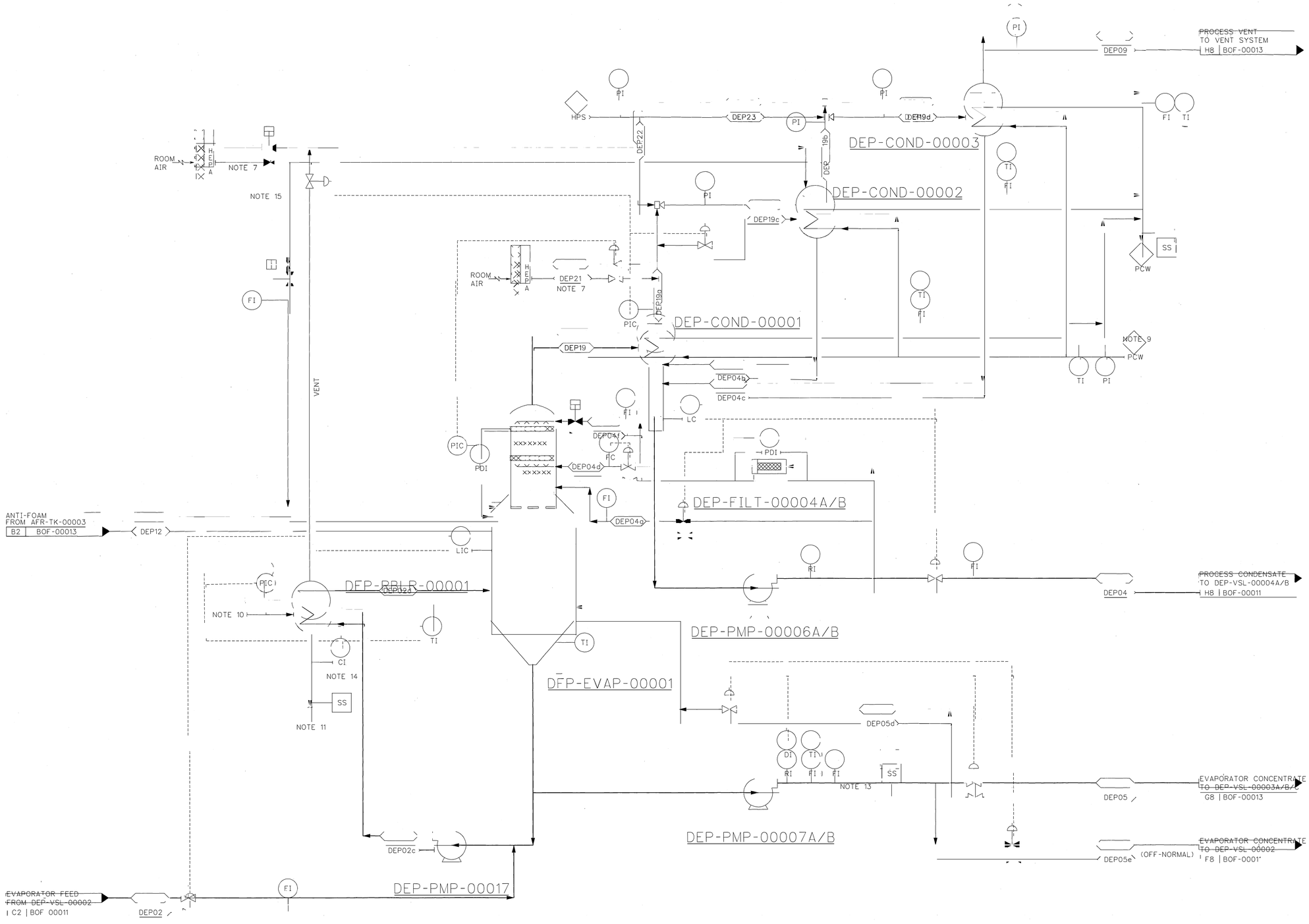

NOTES:

1. SEE DRAWING 24590-WTP-M5-V17T-00001 FOR GENERAL NOTES AND SYMBOLS AND LEGEND.
2. CONTENTS OF THIS DOCUMENT ARE DANGEROUS WASTE PERMIT AFFECTING.
3. ONLY MAJOR INDICATION AND CONTROL INSTRUMENTATION SHOWN.
4. STREAM TABLES FOR SYSTEMS DEP AND DVP PROVIDED ON 24590-BOF-M3-V17T-00001001 AND -00001002.
5. DEP-FILT-00004A/B REQUIRES CONTAMINATED SOLID MATTER DISPOSAL.
6. SECONDARY STEAM LOOP WILL BE PROVIDED TO PREVENT CONTAMINATION OF HPS/SCW SYSTEMS IN STEAM PLANT FACILITY. NOT ALL COMPONENTS ARE SHOWN.
7. IN-BLEED IS PROVIDED FOR PRESSURE CONTROL IN EVAPORATOR.
8. IN-BLEED IS PROVIDED AS VACUUM BREAK.
9. SECONDARY COOLING LOOP WILL BE PROVIDED TO PREVENT CONTAMINATION OF BOF PCW SYSTEM, NOT ALL COMPONENTS ARE SHOWN.
10. PROVIDE SATURATED LOW PRESSURE STEAM AT 13.0 PSIA FROM A DEDICATED OR SECONDARY STEAM SYSTEM. SECONDARY STEAM CHEST CONNECTED TO SAME VACUUM SOURCE AS DEP-RBLR 00001.
11. CONDENSATE RETURN TO A DEDICATED OR SECONDARY STEAM SYSTEM TO PREVENT POSSIBLE CONTAMINATION OF BOF HPS SYSTEM.
12. CONDENSATE FROM DEP-COND-00001 WILL BE RECYCLED WHEN EVAPORATOR IS IN REFLUX MODE. REFLUX MODE MAY BE INITIATED BY HIGH ACTIVITY.
13. TWO FLOW INDICATORS REQUIRED: ONE MAGNETIC FLOW METER AND ONE CORIOLIS METER. PROVIDES REAL-TIME DENSITY MEASUREMENT.
14. CONDUCTIVITY INDICATOR SERVES AS RADIATION MONITOR.
15. PROVIDE PURGE AIR FOR LONG TERM EVAPORATOR SHUTDOWN.

HOLD/OPEN ITEMS:

1. VENDOR TO DETERMINE FINAL EQUIPMENT SIZING.

REFERENCES:

1. 24590-BOF-3ZD-25-00001, WTP DIRECT FEED LOW ACTIVITY WASTE (DFLAW) FACILITY AND SYSTEM DESIGN DESCRIPTIONS.
2. 24590-WTP-RPT-PR-01-008, PROCESS STREAM NUMBERS.
3. 24590-WTP-RPT-ENG-02-009, SYSTEM AND AREA LOCATORS LIST AND SYSTEM DIVISION OF RESPONSIBILITY.
4. 24590-WTP-RPT-ENG-02-010, COMPONENT IDENTIFIERS LIST.
5. 24590-BOF-MEC-DEP-00001, DFLAW EMF PROCESS SYSTEM (DEP) EVAPORATOR OPERATING CONDITIONS, HEATING/ COOLING DUTY, AND UTILITY REQUIREMENTS.

Please note that source, special nuclear, and byproduct materials, as defined in the Atomic Energy Act of 1954 (AEA) are regulated at the U. S. Department of Energy (DOE) facilities exclusively by DOE acting pursuant to its AEA authority. DOE asserts that pursuant to AEA, it has sole and exclusive responsibility and authority to regulate source, special nuclear, and byproduct materials at DOE-owned nuclear facilities. Information contained herein on radionuclides is provided for process description purposes only.

REV	DESCRIPTION	ORG	CHKD	RVWD	APVD	DATE
0	ISSUED FOR DESIGN	DSC	SN	N/A		3/24/16

REVISION HISTORY

ISSUED BY RPP-WTP PDC ISSUE STAMP

PROJECT No.	24590	
SITE	HANFORD	
AREA	200E	
BUILDING No.	25	
BY		DATE
ORIGINATOR		3/24/16
CHECKER		3/24/16
APPROVER		3/24/16
REVIEWER	N/A	

CONTENT APPLICABLE TO ALARA? [X] YES [ ] NO
ADR NO. 24590-BOF-ADR-PR-'5-0001

REV 0

BECHTEL

RIVER PROTECTION PROJECT
WASTE TREATMENT PLANT
2435 STEVENS CENTER PLACE
RICHLAND, WA 99354

CONTRACT No: DE-AC27-01RV14136

PROCESS FLOW DIAGRAM DIRECT FEED EFFLUENT EVAPORATOR (SYSTEM DEP)

SCALE: NONE

24590-BOF-M5-V17T-00012

REV 0

'E' SIZE - 44x34

COMPUTER GENERATED - MANUAL DESIGN CHANGES NOT PERMITTED

R11777524

3/18/2016 3:09:07 PM

PLOTTED BY cseiden c:\work\pdms\25225\24590-BO -M5-V17T-000 2.dgn

FORM E_SON.DGN 02/2009

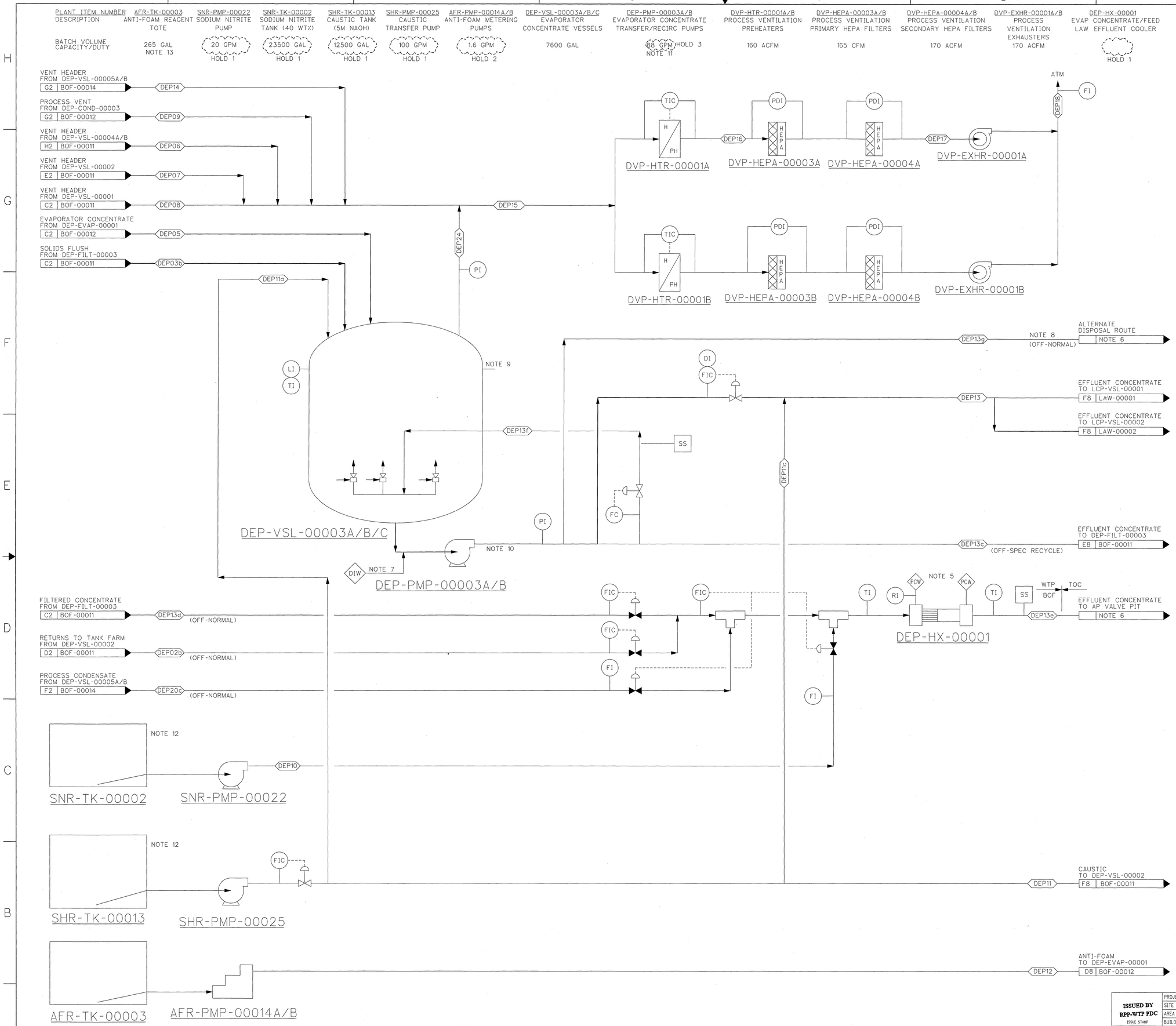

NOTES:

1. SEE DRAWING 24590-WTP-M5-V17T-00001 FOR GENERAL NOTES AND SYMBOLS AND LEGEND.
2. CONTENTS OF THIS DOCUMENT ARE DANGEROUS WASTE PERMIT AFFECTING.
3. ONLY MAJOR INDICATION AND CONTROL INSTRUMENTATION SHOWN.
4. STREAM TABLES FOR SYSTEMS DEP AND DVP PROVIDED ON 24590-BOF-M3-V17T-00001001 AND -00001002.
5. PROVIDE SECONDARY COOLING LOOP TO PREVENT CONTAMINATION OF BOF PCW SYSTEM. NOT ALL COMPONENTS ARE SHOWN.
6. STREAMS TO/FROM CURRENTLY DO NOT HAVE PROCESS FLOW DIAGRAMS.
7. PROVIDE SUFFICIENT FLOW OF PROCESS CONDENSATE (PREFERRED) OR DIW FOR FLUSHING OF TRANSFER LINE.
8. PROVIDE ALTERNATIVE ROUTE TO TRUCK LOADING STATION OR OTHER MEANS OF DISPOSAL. CURRENTLY NO PROCESS FLOW DIAGRAM FOR ALTERNATE DISPOSAL ROUTE.
9. OVERFLOW TO LOW POINT DRAIN VESSEL, DEP-VSL-00001.
10. PROVIDE LOW POINT DRAIN CONNECTION TO DEP-VSL-00001 FOR TRANSFER LINES.
11. BATCH TRANSFER RATE IS 88 GPM. REQUIRED RECIRCULATION RATE TO BE DETERMINED BY VENDOR. SEE HOLD/OPEN ITEMS.
12. PROVIDE SNR-TK-00002 AND SHR-TK-00013 WITH FREEZE PROTECTION FOR LONG TERM OUTDOOR STORAGE. MAINTAIN SNR-TK-00002 CONTENTS AT A MINIMUM 60°F AND SHR-TK-00013 AT A MINIMUM 40°F.
13. ANTI-FOAM REAGENT TOTE SIZING BASED ON STANDARD SUPPLIER INVENTORY.

HOLD/OPEN ITEMS:

1. EQUIPMENT SIZING ON HOLD PENDING RESOLUTION OF ICD 31 CHEMICAL ADDITIONS REQUIREMENTS.
2. CURRENT SIZING BASED ON CRITICAL VELOCITY IN 0.5 INCH LINE. PUMP RATE TO BE DETERMINED BY PUMP SIZING CALCULATION.
3. PUMP SIZING FOR RECIRCULATION RATE TO BE DETERMINED BY VENDOR.

REFERENCES:

1. 24590-BOF-3ZD-25-00001, WTP DIRECT FEED LOW ACTIVITY WASTE (DFLAW) FACILITY AND SYSTEM DESIGN DESCRIPTIONS.
2. 24590-WTP-RPT-PR-01-008, PROCESS STREAM NUMBERS.
3. 24590-WTP-RPT-ENG-02-009, SYSTEM AND AREA LOCATORS LIST AND SYSTEM DIVISION OF RESPONSIBILITY.
4. 24590-WTP-RPT-ENG-02-010, COMPONENT IDENTIFIERS LIST.
5. 24590-WTP-ICD-MG-01-031, ICD 31-INTERFACE CONTROL DOCUMENT FOR DFLAW EFFLUENT RETURNS TO DOUBLE SHELL TANKS.
6. 24590-BOF-MVC-DEP-00009, BATCH SIZING CALCULATION FOR DEP (DIRECT FEED LAW EFFLUENT MANAGEMENT FACILITY PROCESS SYSTEM) VESSELS: DEP-VSL-00001, -00002, -00003A/B/C, -00004A/B, -00005A/B.
7. 24590-BOF-MVC-DEP-00010, PROCESS DATA FOR THE EVAPORATOR CONCENTRATE VESSELS, DEP-VSL-00003A/B/C, AND PUMPS, DEP-PMP-00003A/B.
8. 24590-BOF-M6C-DVP-00001, DFLAW EMF VESSEL VENT PROCESS SYSTEM (DVP) LINE SIZING.

Please note that source, special nuclear, and byproduct materials, as defined in the Atomic Energy Act of 1954 (AEA) are regulated at the U. S. Department of Energy (DOE) facilities exclusively by DOE acting pursuant to its AEA authority. DOE asserts that pursuant to AEA, it has sole and exclusive responsibility and authority to regulate source, special nuclear, and byproduct materials at DOE-owned nuclear facilities. Information contained herein on radionuclides is provided for process description purposes only.

REVISION HISTORY

REV	DESCRIPTION	ORG	CHKD	RVWD	APVD	DATE
0	ISSUED FOR DESIGN	DTC	SN	N/A	[illegible]	3/24/16

ISSUED BY RPP-WTP PDC ISSUE STAMP

PROJECT No.	24590	
SITE	HANFORD	
AREA	200E	
BUILDING No.	25	
	BY	DATE
ORIGINATOR	[illegible]	3/24/16
CHECKER	[illegible]	3/24/16
APPROVER	[illegible]	3/24/16
REVIEWER	N/A	

CONTENT APPLICABLE TO ALARA? [X] YES [ ] NO
ADR NO. 24590-BOF-ADR-PR-15-0001 REV: 0

BECHTEL
RIVER PROTECTION PROJECT
WASTE TREATMENT PLANT
2435 STEVENS CENTER PLACE
RICHLAND, WA 99354

CONTRACT No: DE-AC27-01RV14136

PROCESS FLOW DIAGRAM DIRECT FEED CONCENTRATE TRANSFER (SYSTEM DEP AND DVP)

SCALE: NONE
24590-BOF-M5-V17T-00013
REV 0

"E" SIZE - 44x34
COMPUTER GENERATED - MANUAL DESIGN CHANGES NOT PERMITTED

R11777525

3/18/2016 3:11:39 PM

PLOTTED BY: tcsanvic c:\work\tcsanvic\dms25225\24590-BOF-M5-V17T-00013

FORM E_SDN.DGN 02/2009

TAG * DESCRIPTION/NAME	DEP-VSL-00005A/B PROCESS CONDENSATE LAG STORAGE VESSELS	DEP-PMP-00015A/B/C PROCESS CONDENSATE LAG STORAGE VESSEL RECIRCULATION PUMPS	DEP-PMP-00005A/B PROCESS CONDENSATE LAG STORAGE VESSEL TRANSFER PUMPS	DEP-FILT-00002 PROCESS CONDENSATE FILTER
BATCH VOLUME CAPACITY/DUTY	89200 GAL.	HOLD 1	170 GPM NOTE 11	170 GPM 5 MICRON NOTE 11

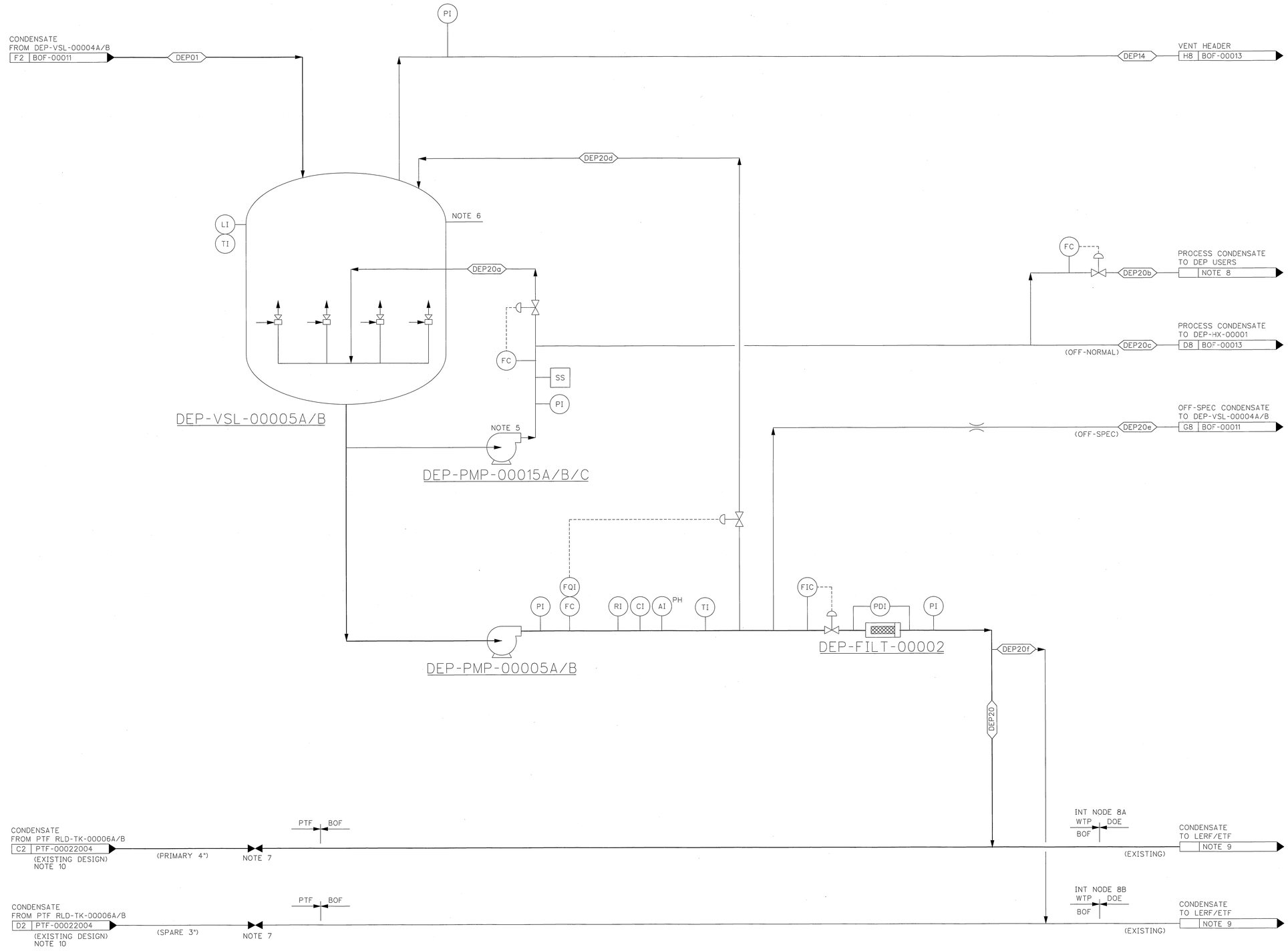

NOTES:

1. SEE DRAWING 24590-WTP-M5-V17T-00001 FOR GENERAL NOTES AND SYMBOLS AND LEGEND.
2. CONTENTS OF THIS DOCUMENT ARE DANGEROUS WASTE PERMIT AFFECTING.
3. ONLY MAJOR INDICATION AND CONTROL INSTRUMENTATION SHOWN.
4. STREAM TABLES FOR SYSTEMS DEP AND DVP PROVIDED ON 24590-BOF-M3-V17T-00001001 AND -00001002.
5. DEP-PMP-00015A/B/C RATED FOR 2X50% OPERATIONS.
6. OVERFLOW TO LOW POINT DRAIN VESSEL, DEP-VSL-00001.
7. FEED FROM PTF RLD-TK-00006A/B WILL HAVE POSITIVE ISOLATION.
8. PROCESS CONDENSATE USERS INCLUDE: DEP-FILT-00003/VARIOUS PIPELINE AND PUMP FLUSHES.
9. PIPELINES TO/FROM CURRENTLY DO NOT HAVE PROCESS FLOW DIAGRAMS.
10. PTF DRAWINGS WILL BE UPDATED ACCORDINGLY WHEN PTF DESIGN RECOMMENCES.
11. DEP-PMP-00005A/B AND DEP-FILT-00002 FLOW RATES BASED ON MAXIMUM ALLOWABLE FLOW RATE OF 170 GPM TO LERF/ETF PER ICD-06. FINAL DEP-PMP-00005A/B AND DEP-FILT-00002 SIZING MAY DIFFER DUE TO PRESSURE LIMITATIONS OF DOWNSTREAM PIPING.

HOLD/OPEN ITEMS:

1. PUMP SIZING FOR RECIRCULATION RATE TO BE DETERMINED BY VENDOR.

REFERENCES:

1. 24590-BOF-3ZD-25-00001, WTP DIRECT FEED LOW ACTIVITY WASTE (DFLAW) FACILITY AND SYSTEM DESIGN DESCRIPTIONS.
2. 24590-WTP-RPT-PR-01-008, PROCESS STREAM NUMBERS.
3. 24590-WTP-RPT-ENG-02-009, SYSTEM AND AREA LOCATORS LIST AND SYSTEM DIVISION OF RESPONSIBILITY.
4. 24590-WTP-RPT-ENG-02-010, COMPONENT IDENTIFIERS LIST.
5. 24590-WTP-ICD-MG-01-006, ICD 06-INTERFACE CONTROL DOCUMENT FOR RADIOACTIVE, DANGEROUS LIQUID EFFLUENTS.
6. 24590-BOF-MVC-DEP-00009, BATCH SIZING CALCULATION FOR DEP (DIRECT FEED LAW EFFLUENT MANAGEMENT FACILITY PROCESS SYSTEM) VESSELS: DEP-VSL-00001, -00002, -00003A/B/C, -00004A/B, -00005A/B.
7. 24590-BOF-MVC-DEP-00008, PROCESS DATA FOR THE PROCESS CONDENSATE LAG STORAGE VESSELS (DEP-VSL-00005A/B), TRANSFER PUMPS (DEP-PMP-00005A/B), AND RECIRCULATION PUMPS (DEP-PMP-00015A/B/C).

Please note that source, special nuclear, and byproduct materials, as defined in the Atomic Energy Act of 1954 (AEA) are regulated at the U. S. Department of Energy (DOE) facilities exclusively by DOE acting pursuant to its AEA authority. DOE asserts that pursuant to AEA, it has sole and exclusive responsibility and authority to regulate source, special nuclear, and byproduct materials at DOE-owned nuclear facilities. Information contained herein on radionuclides is provided for process description purposes only.

REV	DESCRIPTION	ORG	CHKD	RVWD	APVD	DATE
0	ISSUED FOR DESIGN	DJC	SN	N/A		3/24/16

REVISION HISTORY

ISSUED BY RPP-WTP PDC
ISSUE STAMP

PROJECT No.	24590	
SITE	HANFORD	
AREA	200E	
BUILDING No.	25	
	BY	DATE
ORIGINATOR	Daniel J. Chereson	3/24/16
CHECKER		3/24/16
APPROVER		3/24/16
REVIEWER	N/A	

CONTENT APPLICABLE TO ALARA? [X] YES [ ] NO
ADR NO. 24590-BOF-ADR-PR-15-0001 REV: 0

BECHTEL
RIVER PROTECTION PROJECT
WASTE TREATMENT PLANT
2435 STEVENS CENTER PLACE
RICHLAND, WA 99354

CONTRACT No: DE-AC27-01RV14136

PROCESS FLOW DIAGRAM DIRECT FEED PROCESS CONDENSATE TRANSFER (SYSTEM DEP)

SCALE: NONE

24590-BOF-M5-V17T-00014

REV 0

R11777529

3/18/2016 3:13:37 PM

PLOTTED BY: tcsonvic c:\work\tcsonvic\dms25225\24590-BOF-M5-V17T-00014.dgn

FORM E_SDN.DGN 02/2009

"E" SIZE - 44x34
COMPUTER GENERATED - MANUAL
DESIGN CHANGES NOT PERMITTED

DRAWINGS AND DOCUMENTS
OPERATING UNIT GROUP 10 – APPENDIX 13.2
EFFLUENT MANAGEMENT FACILITY PIPING & INSTRUMENT DIAGRAMS (P&IDS)

The documents listed in the following table are incorporated by reference into this permit and are subject to the requirements set forth in Part I Standard Conditions, Part II General Facility Conditions, and Part III Operating Unit Group 10 Conditions. Upon request, copies of the documents can be viewed at the Nuclear Waste Program Resource Center located at 3100 Port of Benton Blvd., Richland, WA. Appointments for viewing can be scheduled by calling (509) 372-7950.

Drawing/Document Number	Description
24590-BOF-M6-DEP-00001002, Rev 0	P&ID – BOF/EMF Direct Feed LAW EMF – Process System – Low Point Drain Vessel Pumps DEP-PMP-00001A/B
24590-BOF-M6-DEP-00009001, Rev 0	P&ID – BOF/EMF Direct Feed LAW EMF Process System – Process Area Sumps – DEP-SUMP-00002A/B
24590-BOF-M6-DEP-00009002, Rev 0	P&ID – BOF/EMF Direct Feed LAW EMF Process System Miscellaneous Sumps – DEP-SUMP-00004A/B
24590-BOF-M6-DEP-00009003, Rev 0	P&ID – BOF/EMF Direct Feed LAW EMF Process System Miscellaneous Sumps – DEP-SUMP-00008
24590-BOF-M6-DEP-00009004, Rev 0	P&ID – BOF/EMF Direct Feed LAW EMF Process System Process Area Sumps – DEP-SUMP-00003A/B
24590-BOF-M6-DEP-00009005, Rev 0	P&ID – BOF/EMF Direct Feed LAW EMF Process System Process Area Sumps – DEP-SUMP-00005A/B
24590-BOF-M6-DEP-00011001, Rev 0	P&ID – BOF/EMF Direct Feed LAW EMF Process System Effluent Facility Leak
24590-BOF-M6N-DEP-00001 (Issued against 24590-BOF-M6-DEP-00001002)	Document Change Notice – Miscellaneous Changes to Low Point Drain Vessel P&ID
24590-BOF-M6N-DEP-00007 (Issued against 24590-BOF-M6-DEP-00009001/9003/9005)	Document Change Notice – Miscellaneous Title Changes and Removal of Auto/Manual on DEP-YC-8650
24590-BOF-M6N-J21T-00002 (Issued against 24590-BOF-M6-DEP-00011001)	Document Change Notice – Addition, Removal, and Revision of Offsheet Connectors for Lead Detection (Issued against P&ID-BOF/EMF Direct Feed LAW EMF Process system Effluent Facility Leak
24590-BOF-M6-DVP-00001001, Rev 0	P&ID – BOF/EMF Direct Feed LAW EMF Vessel Vent Process System DVP-EXHR-00001A/B
24590-BOF-M6-RLD-00012001, Rev 0	P&ID – BOF Radioactive Liquid Waste Disposal System Underground Transfer Lines
24590-BOF-M6-RLD-00012002, Rev 0	P&ID – BOF Radioactive Liquid Waste Disposal System Underground Transfer Lines

24590-BOF-M6N-RLD-00002	Drawing Change Notice – Changes to Notes on Pipe Bend Radius and Coating
24590-BOF-M8-SDJ-00001, Rev A	BOF/EMF Buildings SDJ Plant Room V&ID Exhaust Stack Monitoring System
RESERVED	RESERVED

Source documents (which do not include a "P" in the last set of numbers, e.g. "-P0001," or "-TP001") should be used in conjunction with any document change notices issued against them.

We are currently transitioning from permit documents (which do include a "P" in the last set of numbers) to source documents. At the end of the transition period, permit submittals will contain source documents and will be incorporated into the permit as described in Ecology Publication #07-05-006.

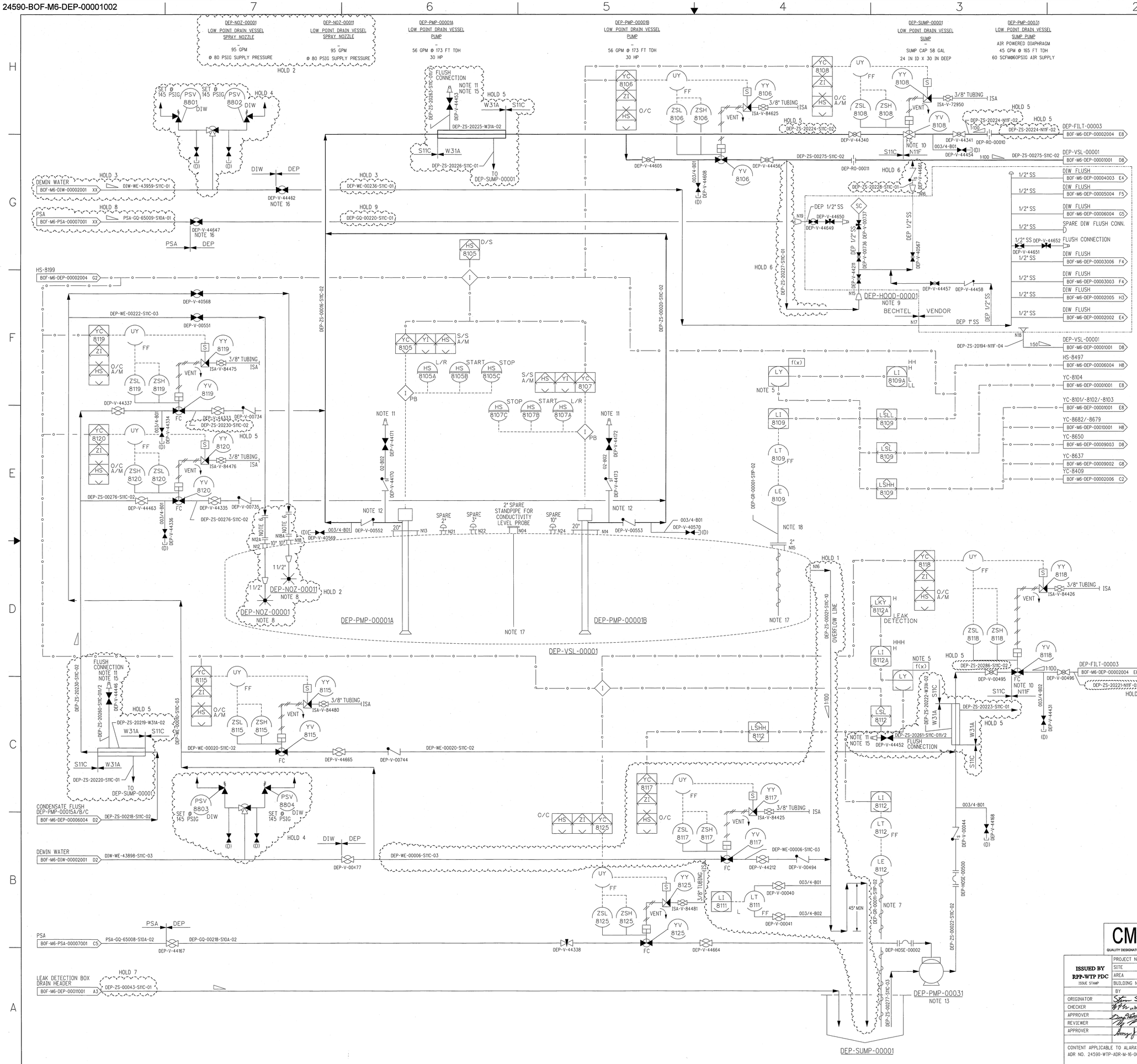

NOTES:

1. SEE DRAWINGS 24590-WTP-M6-50-00001 THROUGH 24590-WTP-M6-50-00008 FOR GENERAL NOTES, SYMBOLS AND LEGEND, AND GENERAL SLOPE REQUIREMENTS.
2. CONTENTS OF THIS DOCUMENT ARE DANGEROUS WASTE PERMIT AFFECTING.
3. THE PRESSURE BOUNDARY FOR ALL COMPONENTS ON THIS DRAWING IS QUALITY LEVEL CM AND SEISMIC CATEGORY SC-IV, UNLESS OTHERWISE NOTED.
4. ALL LINES SHOWN ON THIS DRAWING SHALL BE FREE DRAINING, UNLESS OTHERWISE NOTED.
5. FUNCTION CONVERTS TANK LEVEL IN INCHES TO GALLONS.
6. SPOOL PIECE TO FACILITATE SPRAY NOZZLE REMOVAL.
7. STANDPIPE TO BE INSTALLED FROM 1/2" OFF OF THE BOTTOM OF SUMP TO 3 FEET ABOVE THE SUMP.
8. LOCATE SPRAY NOZZLES ON OPPOSITE SIDES OF VESSEL.
9. SAMPLE FUME HOOD (DEP-HOOD-00001) DETAILS SHOWN ON 24590-BOF-MO-DEP-00001.
10. VALVE BODY SHALL BE INSTALLED IN THE HORIZONTAL POSITION. LOCATE AS CLOSE AS POSSIBLE TO DEP-FILT-00003.
11. FOR CONNECTION TO LOCAL DIW UTILITY STATION FOR FLUSHING.
12. LOCATE FLUSH CONNECTION ON THE TOP OF THE PROCESS PIPE.
13. A DRAIN CONNECTION WITH DRAIN VALVE SHALL BE PROVIDED ON THE PUMP CASING.
14. 24590-BOF-DGCE-MS-16-00004 APPROVES THE USE OF BALL VALVES FOR INSTRUMENT ROOT VALVES.
15. PRESSURE OF CONNECTION UTILITY NOT TO EXCEED 50 PSIG DESIGN PRESSURE.
16. LOCATE VALVE CLOSE TO DEP-HOOD-00001.
17. STANDPIPE PROVIDED BY VESSEL VENDOR FOR LEVEL PROBE.
18. LINE NUMBER IS PROVIDED ONLY FOR PLANT DESIGN TO CREATE ISO CONNECTING HARDWARE FOR LT-8109 TO VESSEL NOZZLE.

HOLD/OPEN ITEMS:

1. OVERFLOW AND LOOP SEAL ON HOLD PENDING DESIGN CHANGE FOR DIPPED OVERFLOW AND BASIS CALCULATION.
2. DEP-NOZ-00001/-00011 CONFIGURATION AND FLOW CONDITIONS ON HOLD. THIS HOLD WILL BE RELEASED WHEN VENDOR INFORMATION IS RECEIVED.
3. OFF-SHEET CONNECTOR QUADRANT AND LINE NUMBER ARE ON HOLD PENDING REVISION OF CONNECTING P&ID AND REVISION OF 24590-BOF-M6C-DIW-00006.
4. RELIEF VALVES ON HOLD, HOLD WILL BE RELEASED WHEN CALCULATIONS DETERMINING RELIEF VALVE SIZING IS ISSUED.
5. PENDING CLOSURE OF APPROPRIATE ACTIONS IN 24590-WTP-ATS-MGT-16-0012.
6. LINE SIZE ON HOLD PENDING REVISION OF 24590-BOF-MPC-DEP-00002 TO INCLUDE THIS ROUTE.
7. LINE NUMBER ON HOLD PENDING ISSUANCE OF CONNECTION P&ID 24590-BOF-M6-DEP-00011001.
8. OFF-SHEET CONNECTOR QUADRANT AND LINE NUMBER ARE ON HOLD PENDING REVISION OF CONNECTING P&ID AND REVISION OF 24590-BOF-M6C-PSA-00013.

REFERENCES:

1. 24590-BOF-3ZD-25-00001, WTP DIRECT FEED LOW ACTIVITY WASTE (DFLAW) FACILITY AND SYSTEM DESIGN DESCRIPTIONS.

PLEASE NOTE THAT SOURCE, SPECIAL NUCLEAR AND BYPRODUCT MATERIALS AS DEFINED IN THE ATOMIC ENERGY ACT OF 1954 (AEA) ARE REGULATED AT THE U.S. DEPARTMENT OF ENERGY (DOE) FACILITIES EXCLUSIVELY BY DOE ACTING PURSUANT TO ITS AEA AUTHORITY. DOE ASSERTS, THAT PURSUANT TO THE AEA IT HAS SOLE AND EXCLUSIVE RESPONSIBILITY AND AUTHORITY TO REGULATE SOURCE, SPECIAL NUCLEAR AND BYPRODUCT MATERIALS AT DOE-OWNED NUCLEAR FACILITIES. INFORMATION CONTAINED HEREIN ON RADIONUCLIDES IS PROVIDED FOR PROCESS DESCRIPTION PURPOSES ONLY.

CM
QUALITY DESIGNATOR

REV	DESCRIPTION	ORG	CHKD	RVWD	APVD	DATE
0	ISSUED FOR CONSTRUCTION	SS	BNG BF	BPV	AF DC	3/24/16

REVISION HISTORY

ISSUED BY RPP-WTP PDC		
PROJECT No.	24590	
SITE	HANFORD	
AREA	200E	
BUILDING No.	25A	
ISSUE STAMP		

	BY	DATE
ORIGINATOR	Steven Simon	3/22/16
CHECKER	[illegible]	3/23/16
APPROVER	[illegible]	3/23/16
REVIEWER	[illegible]	3/23/16
APPROVER	[illegible]	3/24/16

CONTENT APPLICABLE TO ALARA? [X] YES [ ] NO
ADR NO. 24590-WTP-ADR-M-16-0001 REV: 1

RIVER PROTECTION PROJECT
WASTE TREATMENT PLANT
2435 STEVENS CENTER PLACE
RICHLAND, WA 99354

CONTRACT No: DE-AC27-01RV14136

P&ID - BOF/EMF DIRECT FEED LAW EMF PROCESS SYSTEM LOW POINT DRAIN VESSEL PUMPS DEP-PMP-00001A/B

SCALE: NONE

24590-BOF-M6-DEP-00001002

REV 0

'E' SIZE - 44x34
COMPUTER GENERATED - MANUAL DESIGN CHANGES NOT PERMITTED

R1177503

3/22/2016 10:22:06 AM

PLOTTED BY: jrcech

c:\work\jrcech\dms25914\BOF\M6DEP00001002.dgn

FORM E_SDN.DGN 02/2009

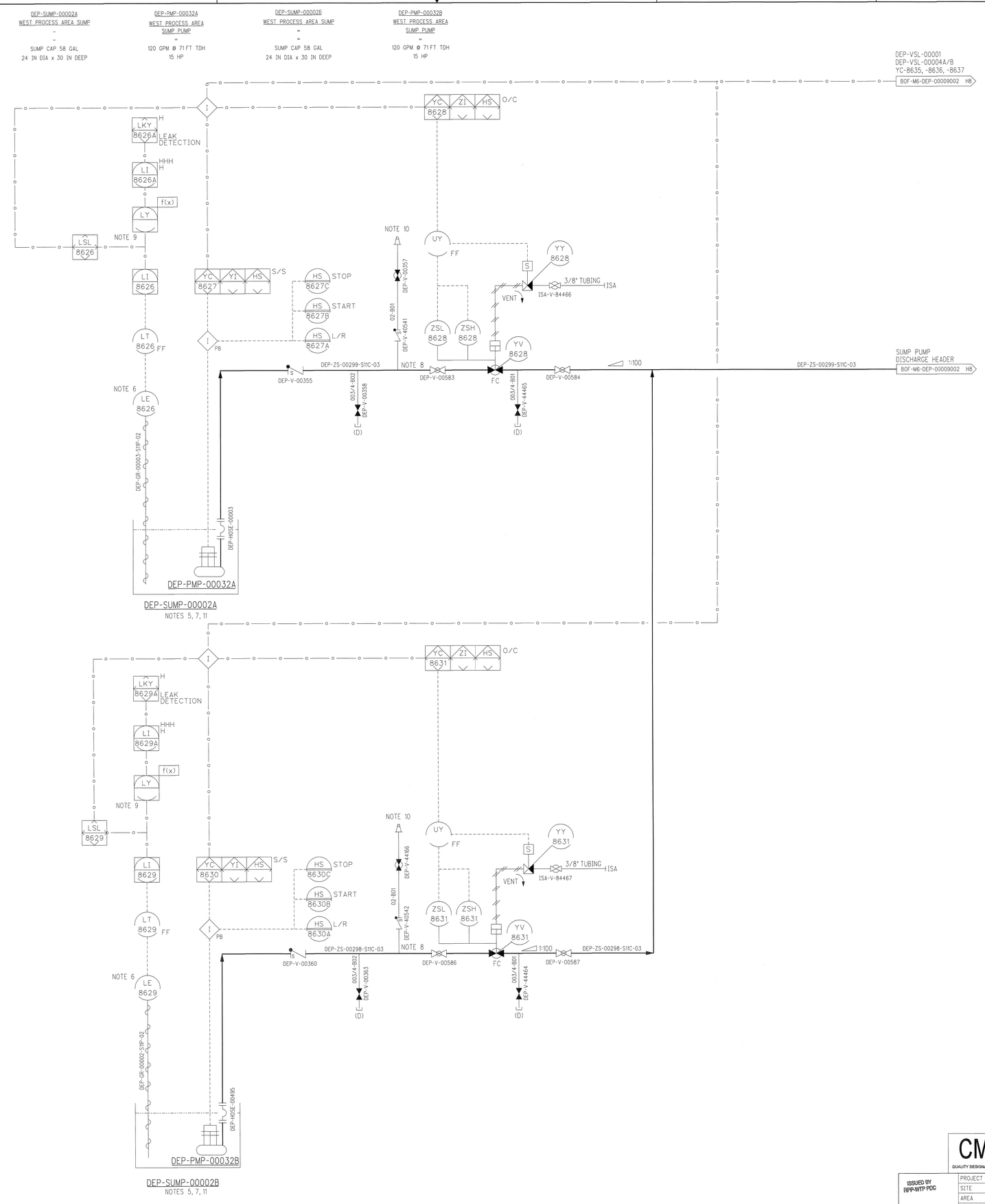

NOTES:

1. SEE DRAWINGS 24590-WTP-M6-50-00001 THROUGH 24590-WTP-M6-50-00008 FOR GENERAL NOTES, SYMBOLS AND LEGEND, AND GENERAL SLOPE REQUIREMENTS.
2. CONTENTS OF THIS DOCUMENT ARE DANGEROUS WASTE PERMIT AFFECTING.
3. THE PRESSURE BOUNDARY FOR ALL COMPONENTS ON THIS DRAWING IS QUALITY LEVEL CM AND SEISMIC CATEGORY SC-IV, UNLESS OTHERWISE NOTED.
4. ALL LINES SHOWN ON THIS DRAWING SHALL BE FREE DRAINING, UNLESS OTHERWISE NOTED.
5. FOR THE PURPOSES OF ALARA, THE SUMP PUMPS IN ROOM E-0103 (C5) SHALL BE STARTED WITHIN 30 MINUTES OF LEAK DETECTION TO PREVENT EFFLUENT FROM SPILLING INTO ROOM E-0102 (C3).
6. STANDPIPE TO BE INSTALLED FROM 1/2" OFF OF THE BOTTOM OF THE SUMP TO 3.6 FEET ABOVE THE SUMP.
7. LOCATE IN WEST SIDE OF PROCESS AREA (E-0103).
8. LOCATE FLUSH CONNECTION AT THE TOP OF THE PROCESS PIPE, AS CLOSE AS POSSIBLE TO THE CHECK VALVE.
9. FUNCTION CONVERTS SUMP LEVEL IN INCHES TO GALLONS.
10. FOR CONNECTION TO LOCAL DIW UTILITY STATION FOR FLUSHING.
11. SUMP SHALL BE FLAT BOTTOM SUMP.

HOLD/OPEN ITEMS:

NONE

REFERENCES:

1. 24590-BOF-3ZD-25-00001, WTP DIRECT FEED LOW ACTIVITY WASTE (DFLAW) FACILITY AND SYSTEM DESIGN DESCRIPTIONS.

PLEASE NOTE THAT SOURCE, SPECIAL NUCLEAR AND BYPRODUCT MATERIALS, AS DEFINED IN THE ATOMIC ENERGY ACT OF 1954 (AEA) ARE REGULATED AT THE U.S. DEPARTMENT OF ENERGY (DOE) FACILITIES EXCLUSIVELY BY DOE ACTING PURSUANT TO ITS AEA AUTHORITY. DOE ASSERTS THAT PURSUANT TO THE AEA IT HAS SOLE AND EXCLUSIVE RESPONSIBILITY AND AUTHORITY TO REGULATE SOURCE, SPECIAL NUCLEAR AND BYPRODUCT MATERIALS AT DOE-OWNED NUCLEAR FACILITIES. INFORMATION CONTAINED HEREIN ON RADIONUCLIDES IS PROVIDED FOR PROCESS DESCRIPTION PURPOSES ONLY.

DRAWING INDEX

DWG NO	TITLE
24590-BOF-M6-DEP-00009001	DEP SYSTEM PROCESS AREA SUMPS DEP-SUMP-00002A/B
24590-BOF-M6-DEP-00009002	DEP SYS PROCESS VESSEL AREA SUMPS DEP-SUMP-00004A/B
24590-BOF-M6-DEP-00009003	DEP SYSTEM MISC SUMPS DEP-SUMP-00008
24590-BOF-M6-DEP-00009004	DEP SYSTEM PROCESS AREA SUMPS DEP-SUMP-00003A/B
24590-BOF-M6-DEP-00009005	DEP SYS PROCESS VESSEL AREA SUMPS DEP-SUMP-00005A/B

CM
QUALITY DESIGNATOR

REVISION HISTORY

REV	DESCRIPTION	ORG	CHKD	RVWD	APVD	DATE
0	ISSUED FOR CONSTRUCTION	JJD	RP	BPV		3/24/16

ISSUED BY RPP-WTP PDC

ISSUE STAMP

PROJECT No.	24590
SITE	HANFORD
AREA	200E
BUILDING No.	25

	BY	DATE
ORIGINATOR		3/23/16
CHECKER		3/23/16
APPROVER		3/23/16
REVIEWER		3/23/16
APPROVER		3/24/16

CONTENT APPLICABLE TO ALARA? [X] YES [ ] NO
ADR NO. 24590-WTP-ADR-M-16-0001 REV: 1

BECHTEL

RIVER PROTECTION PROJECT
WASTE TREATMENT PLANT
2435 STEVENS CENTER PLACE
RICHLAND, WA 99354

CONTRACT No: DE-AC27-01RV14136

P&ID - BOF / EMF
DIRECT FEED LAW EMF PROCESS SYSTEM PROCESS AREA SUMPS DEP-SUMP-00002A/B

SCALE: NONE

24590-BOF-M6-DEP-00009001

REV 0

FORM E_SDN.DGN 02/2009

'E' SIZE - 44x34
COMPUTER GENERATED - MANUAL DESIGN CHANGES NOT PERMITTED

R11777704

3/22/2016 1:15:08 PM

PLOTTED BY: jrecchi c:\work\jrecchi\dms2594\BOFM6DEP00009001.dgn

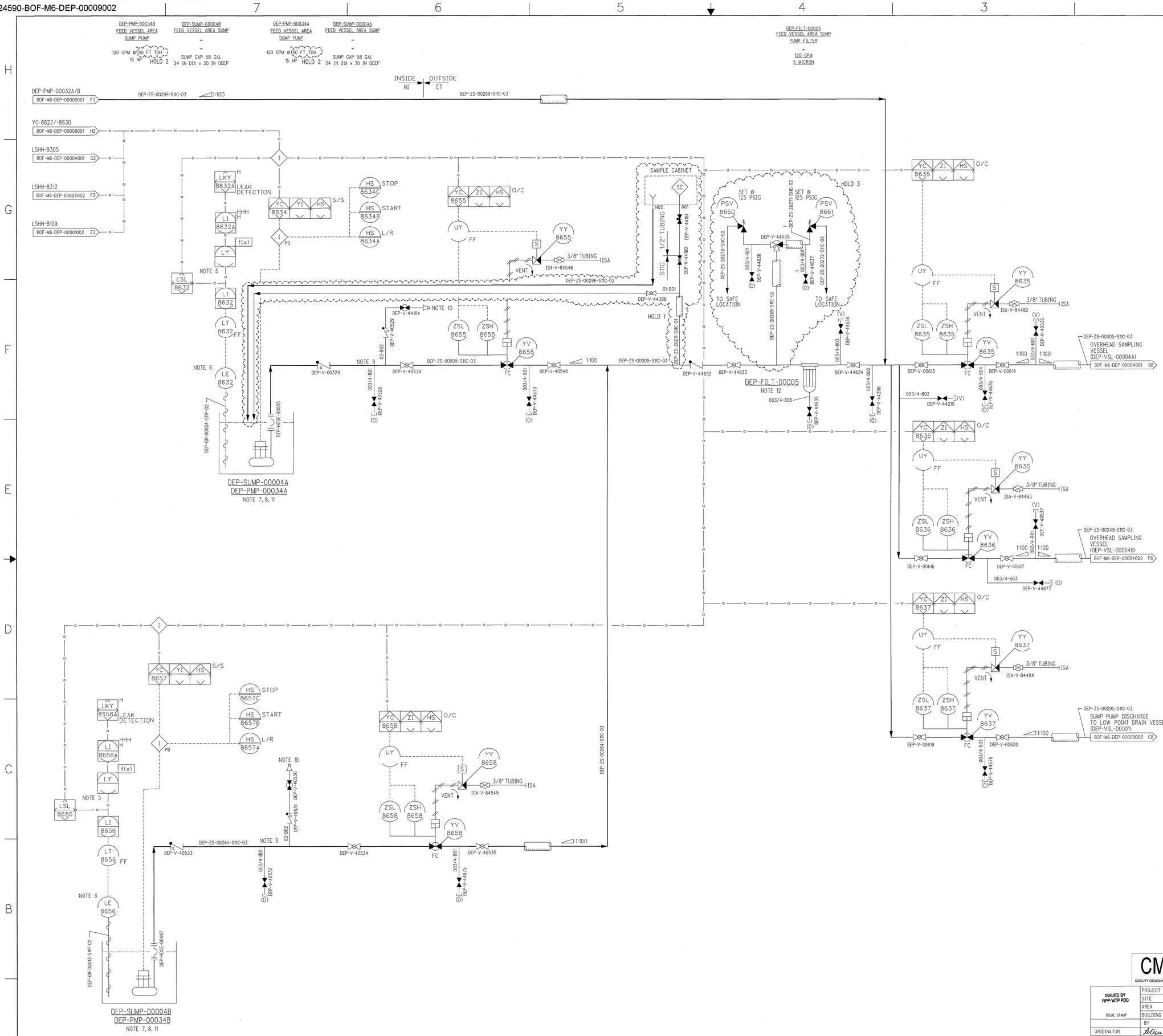

NOTES:

1. SEE DRAWINGS 24590-WTP-M6-50-00001 THROUGH 24590-WTP-M6-50-00008 FOR GENERAL NOTES, SYMBOLS AND LEGEND, AND GENERAL SLOPE REQUIREMENTS.
2. CONTENTS OF THIS DOCUMENT ARE DANGEROUS WASTE PERMIT AFFECTING.
3. THE PRESSURE BOUNDARY FOR ALL COMPONENTS ON THIS DRAWING IS QUALITY LEVEL CM AND SEISMIC CATEGORY SC-IV, UNLESS OTHERWISE NOTED.
4. ALL LINES SHALL BE FREE DRAINING, UNLESS OTHERWISE NOTED.
5. FUNCTION CONVERTS SUMP LEVEL IN INCHES TO GALLONS.
6. STANDPIPE TO BE INSTALLED FROM 1/2" OFF OF THE BOTTOM OF THE SUMP TO 6.4 FEET ABOVE THE SUMP.
7. LOCATE IN THE EVAPORATOR CONCENTRATE VESSEL AREA (E-0105).
8. SUMP CONTENTS ARE SAMPLED PRIOR TO TRANSFER. RAIN AND VOLUME FROM VESSEL FAILURE WILL TRANSFER TO OVERHEAD SAMPLING VESSELS. SMALL LEAKS WILL TRANSFER TO LOW POINT DRAIN VESSEL.
9. LOCATE FLUSH CONNECTION ON THE TOP OF THE PROCESS PIPE AS CLOSE AS POSSIBLE TO THE CHECK VALVE
10. FOR CONNECTION TO LOCAL DIW UTILITY STATION FOR FLUSHING.
11. SUMP SHALL BE FLAT BOTTOM SUMP.
12. FILTER MEDIA TO BE VISUALLY CHECKED SEMI-ANNUALLY AND REPLACED ANNUALLY AT A MINIMUM.

HOLD/OPEN ITEMS:

1. SUMP SAMPLING DESIGN ON HOLD PENDING IDENTIFICATION OF A METHOD OF OBTAINING A SAMPLE WITHOUT REQUIRING THE SUMP PUMP OPERATING. SUMP PUMP MAY REQUIRE MORE LIQUID THEN AVAILABLE WHEN SAMPLE IS REQUIRED. SAMPLE DESIGN SHOULD NOT ALLOW TRANSFER BETWEEN SUMPS.
2. SUMP PUMP TDH ON HOLD UNTIL CALCULATION IS UPDATED TO INCLUDE DEP-FILT-00005.
3. PSV DESIGN ON HOLD PENDING PSV SIZING CALCULATION.

REFERENCES:

1. 24590-BOF-3ZD-25-00001, WTP DIRECT FEED LOW ACTIVITY WASTE (DFLAW) FACILITY AND SYSTEM DESIGN DESCRIPTIONS.

PLEASE NOTE THAT SOURCE, SPECIAL NUCLEAR AND BYPRODUCT MATERIALS, AS DEFINED IN THE ATOMIC ENERGY ACT OF 1954 (AEA) ARE REGULATED AT THE U.S. DEPARTMENT OF ENERGY (DOE) FACILITIES EXCLUSIVELY BY DOE ACTING PURSUANT TO ITS AEA AUTHORITY. DOE ASSERTS, THAT PURSUANT TO THE AEA IT HAS SOLE AND EXCLUSIVE RESPONSIBILITY AND AUTHORITY TO REGULATE SOURCE, SPECIAL NUCLEAR AND BYPRODUCT MATERIALS AT DOE-OWNED NUCLEAR FACILITIES. INFORMATION CONTAINED HEREIN ON RADIONUCLIDES IS PROVIDED FOR PROCESS DESCRIPTION PURPOSES ONLY.

CM
QUALITY DESIGNATOR

REV	DESCRIPTION	ORG	CHKD	RVWD	APVD	DATE
0	ISSUED FOR CONSTRUCTION	SJD	RP	BRV	BEP	3/24/16

REVISION HISTORY

ISSUED BY RPP-WTP PDC

ISSUE STAMP

PROJECT No.	24590	
SITE	HANFORD	
AREA	200E	
BUILDING No.	25	

	BY	DATE
ORIGINATOR	Steven Jackson	3/22/16
CHECKER	Robert Pontius	3/22/16
APPROVER	[illegible]	3/22/16
REVIEWER	[illegible]	3/22/16
APPROVER	[illegible]	3/24/16

CONTENT APPLICABLE TO ALARA? [X] YES [ ] NO
ADR NO. 24590-WTP-ADR-M-16-0001 REV: 1

BECHTEL

RIVER PROTECTION PROJECT
WASTE TREATMENT PLANT
2435 STEVENS CENTER PLACE
RICHLAND, WA 99354

CONTRACT No: DE-AC27-01RV14136

P&ID - BOF / EMF
DIRECT FEED LAW EMF PROCESS SYSTEM
PROCESS VESSEL AREA SUMPS
DEP-SUMP-00004A / B

SCALE: NONE

24590-BOF-M6-DEP-00009002

REV 0

FORM E_SDN.DGN 02/2009

"E" SIZE - 44x34
COMPUTER GENERATED - MANUAL
DESIGN CHANGES NOT PERMITTED

R11777705

3/22/2016 11:01:45 AM

PLOTTED BY: jfcecchi

c:\work\jfcecchi\dms25914\BOFM6DEP00009002.dgn

DEP-SUMP-00008	DEP-PMP-00038
TRUCK BAY SUMP	TRUCK BAY SUMP PUMP
-	-
-	-
SUMP CAP 58 GAL	120 GPM @ 58 FT TDH
24 IN DIA X 30 IN DEEP	7.5 HP

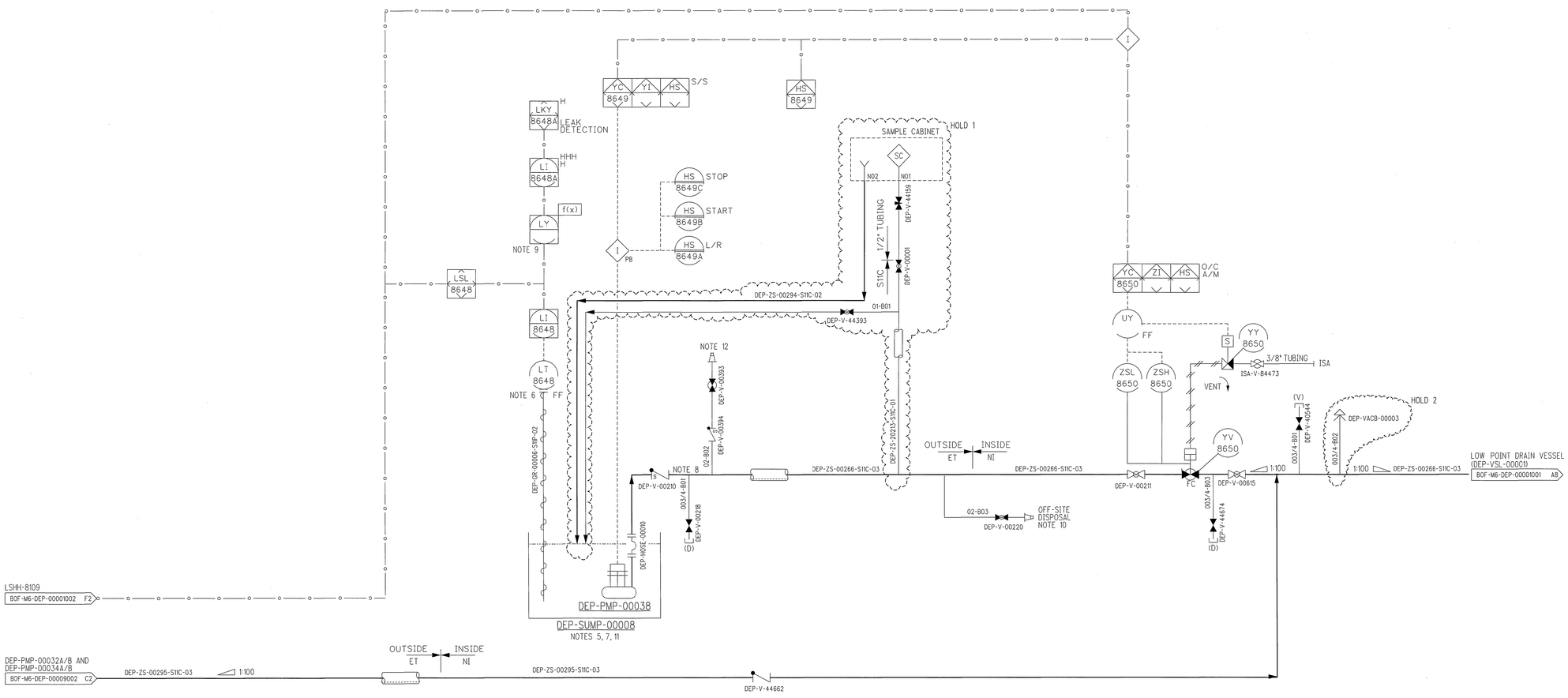

NOTES:

1. SEE DRAWINGS 24590-WTP-M6-50-00001 THROUGH 24590-WTP-M6-50-00008 FOR GENERAL NOTES, SYMBOLS AND LEGEND, AND GENERAL SLOPE REQUIREMENTS.
2. CONTENTS OF THIS DOCUMENT ARE DANGEROUS WASTE PERMIT AFFECTING.
3. THE PRESSURE BOUNDARY FOR ALL COMPONENTS ON THIS DRAWING IS QUALITY LEVEL CM AND SEISMIC CATEGORY SC-IV, UNLESS OTHERWISE NOTED.
4. ALL LINES SHOWN ON THIS DRAWING SHALL BE FREE DRAINING, UNLESS OTHERWISE NOTED.
5. SUMP SHALL BE FLAT BOTTOM SUMP.
6. STANDPIPE TO BE INSTALLED FROM 1/2" OFF OF THE BOTTOM OF THE SUMP TO 3 FEET ABOVE THE SUMP.
7. LOCATE IN THE TRUCK BAY AREA (E-0108).
8. LOCATE FLUSH CONNECTION ON THE TOP OF THE PROCESS PIPE AS CLOSE AS POSSIBLE TO THE CHECK VALVE
9. FUNCTION CONVERTS SUMP LEVEL IN INCHES TO GALLONS.
10. LOCATE ISOLATION VALVE AND QUICK DISCONNECT NEAR OUTSIDE OF BERM FOR CONNECTION TO OFF-SITE DISPOSAL.
11. SUMP CONTENTS ARE SAMPLED PRIOR TO TRANSFER TO ENSURE COMPATIBILITY IN PROCESS. FOR OFF-SITE DISPOSAL OF A SPILL, MANUAL VALVE DEP-V-00220 NEEDS TO BE OPENED AND PUMP STARTED VIA OVERRIDE.
12. FOR CONNECTION TO LOCAL DIW UTILITY STATION FOR FLUSHING.

HOLD/OPEN ITEMS:

1. SUMP SAMPLING DESIGN ON HOLD PENDING IDENTIFICATION OF A METHOD OF OBTAINING A SAMPLE WITHOUT REQUIRING THE SUMP PUMP OPERATING. SUMP PUMP MAY REQUIRE MORE LIQUID THEN AVAILABLE WHEN SAMPLE IS REQUIRED. SAMPLE DESIGN SHOULD NOT ALLOW TRANSFER BETWEEN SUMPS.
2. VACUUM BREAKER ON HOLD PENDING SIZING CALCULATION.

REFERENCES:

1. 24590-BOF-3ZD-25-00001, WTP DIRECT FEED LOW ACTIVITY WASTE (DFLAW) FACILITY AND SYSTEM DESIGN DESCRIPTIONS.

PLEASE NOTE THAT SOURCE, SPECIAL NUCLEAR AND BYPRODUCT MATERIALS, AS DEFINED IN THE ATOMIC ENERGY ACT OF 1954 (AEA) ARE REGULATED AT THE U.S. DEPARTMENT OF ENERGY (DOE) FACILITIES EXCLUSIVELY BY DOE ACTING PURSUANT TO ITS AEA AUTHORITY. DOE ASSERTS, THAT PURSUANT TO THE AEA IT HAS SOLE AND EXCLUSIVE RESPONSIBILITY AND AUTHORITY TO REGULATE SOURCE, SPECIAL NUCLEAR AND BYPRODUCT MATERIALS AT DOE-OWNED NUCLEAR FACILITIES. INFORMATION CONTAINED HEREIN ON RADIONUCLIDES IS PROVIDED FOR PROCESS DESCRIPTION PURPOSES ONLY.

CM
QUALITY DESIGNATOR

REV	DESCRIPTION	ORG	CHKD	RVWD	APVD	DATE
0	ISSUED FOR CONSTRUCTION	SJD	RP	BMV		3/24/16

REVISION HISTORY

ISSUED BY RPP-WTP PDC

ISSUE STAMP

PROJECT No.	24590
SITE	HANFORD
AREA	200E
BUILDING No.	25

	BY	DATE
ORIGINATOR	Steven Dawson	3/22/16
CHECKER	Robert Preston	3/22/16
APPROVER		3/22/16
REVIEWER		3/22/16
APPROVER		3/24/16

CONTENT APPLICABLE TO ALARA? [X] YES [ ] NO
ADR NO. 24590-WTP-ADR-M-16-0001 REV: 1

RIVER PROTECTION PROJECT
WASTE TREATMENT PLANT
2435 STEVENS CENTER PLACE
RICHLAND, WA 99354

CONTRACT No: DE-AC27-01RV14136

P&ID - BOF / EMF
DIRECT FEED LAW EMF
PROCESS SYSTEM
MISCELLANEOUS SUMPS
DEP-SUMP-00008

SCALE: NONE

24590-BOF-M6-DEP-00009003

REV 0

FORM E_SDN.DGN 02/2009

'E' SIZE - 44x34
COMPUTER GENERATED - MANUAL DESIGN CHANGES NOT PERMITTED

R1177706

3/22/2016 11:02:53 AM

PLOTTED BY: jrzech1

c:\work\jrzech1\dms25914\BOFM6DEP00009003.dgn

DEP-SUMP-00003A	DEP-PMP-00033A	DEP-SUMP-00003B	DEP-PMP-00033B
EAST PROCESS AREA SUMP	EAST PROCESS AREA SUMP PUMP	EAST PROCESS AREA SUMP	EAST PROCESS AREA SUMP PUMP
SUMP CAP 58 GAL	120 GPM @ 83 FT TDH	SUMP CAP 58 GAL	120 GPM @ 83 FT TDH
24 IN DIA x 30 IN DEEP	15 HP	24 IN DIA x 30 IN DEEP	15 HP

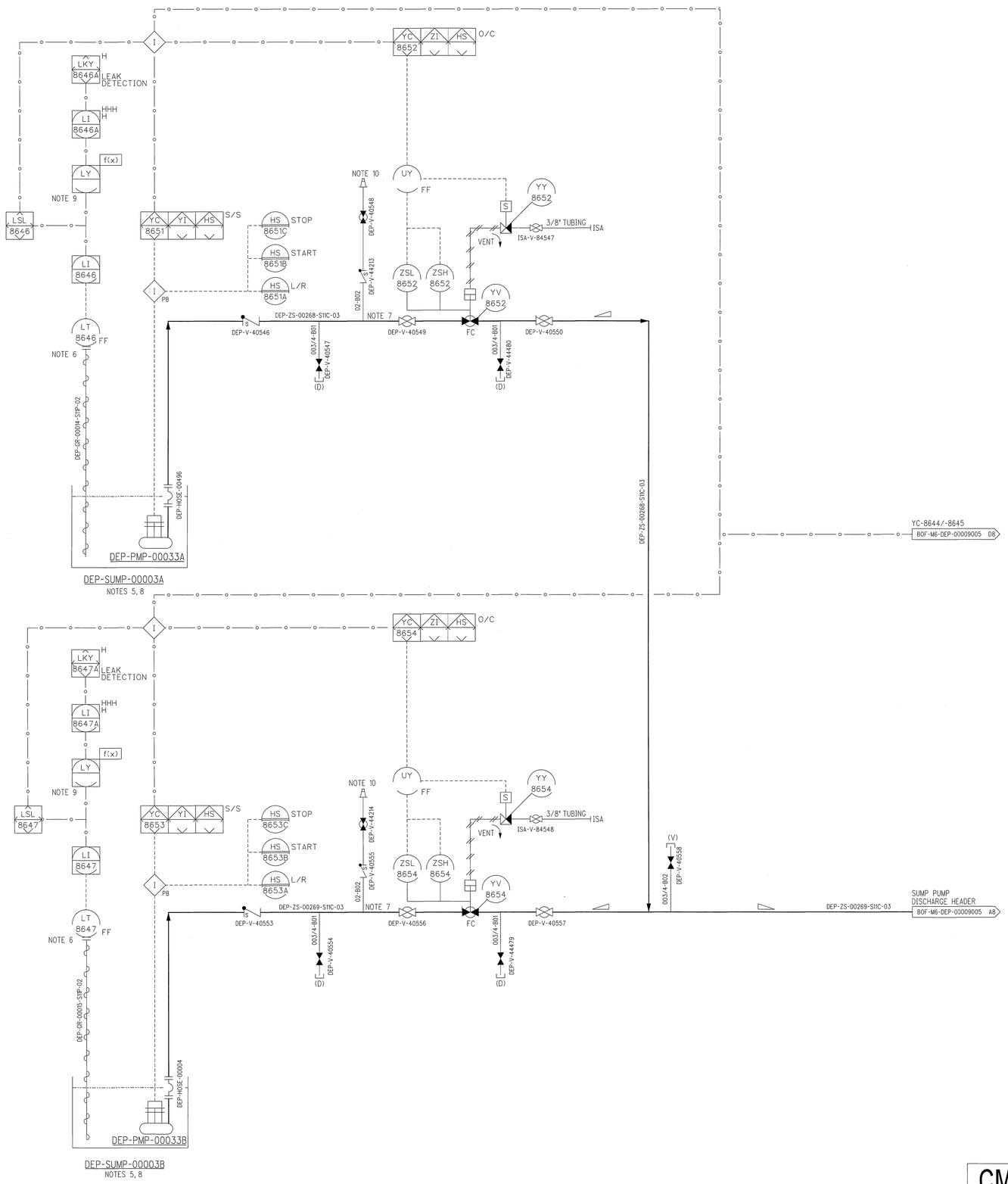

NOTES:

1. SEE DRAWINGS 24590-WTP-M6-50-00001 THROUGH 24590-WTP-M6-50-00008 FOR GENERAL NOTES, SYMBOLS AND LEGEND, AND GENERAL SLOPE REQUIREMENTS.
2. CONTENTS OF THIS DOCUMENT ARE DANGEROUS WASTE PERMIT AFFECTING.
3. THE PRESSURE BOUNDARY FOR ALL COMPONENTS ON THIS DRAWING IS QUALITY LEVEL CM AND SEISMIC CATEGORY SC-IV, UNLESS OTHERWISE NOTED.
4. ALL LINES SHOWN ON THIS DRAWING SHALL BE FREE DRAINING, UNLESS OTHERWISE NOTED.
5. SUMP SHALL BE FLAT BOTTOM SUMP.
6. STANDPIPE TO BE INSTALLED FROM 1/2" OFF OF THE BOTTOM OF THE SUMP TO 5 FEET ABOVE THE SUMP.
7. LOCATE FLUSH CONNECTION ON THE TOP OF THE PROCESS PIPE, AS CLOSE AS POSSIBLE TO THE CHECK VALVE.
8. LOCATE IN EAST SIDE OF PROCESS AREA (E-0102).
9. FUNCTION CONVERTS SUMP LEVEL IN INCHES TO GALLONS.
10. FOR CONNECTION TO LOCAL DIW UTILITY STATION FOR FLUSHING.

HOLD/OPEN ITEMS:

NONE

REFERENCES:

1. 24590-~~WTP~~-BOF-25-00001, WTP DIRECT FEED LOW ACTIVITY WASTE (DFLAW) AND SYSTEM DESIGN DESCRIPTIONS.

PLEASE NOTE THAT SOURCE, SPECIAL NUCLEAR AND BYPRODUCT MATERIALS, AS DEFINED IN THE ATOMIC ENERGY ACT OF 1954 (AEA) ARE REGULATED AT THE U.S. DEPARTMENT OF ENERGY (DOE) FACILITIES EXCLUSIVELY BY DOE ACTING PURSUANT TO ITS AEA AUTHORITY. DOE ASSERTS THAT PURSUANT TO THE AEA IT HAS SOLE AND EXCLUSIVE RESPONSIBILITY AND AUTHORITY TO REGULATE SOURCE, SPECIAL NUCLEAR AND BYPRODUCT MATERIALS AT DOE-OWNED NUCLEAR FACILITIES. INFORMATION CONTAINED HEREIN ON RADIONUCLIDES IS PROVIDED FOR PROCESS DESCRIPTION PURPOSES ONLY.

CM — QUALITY DESIGNATOR

REVISION HISTORY

REV	DESCRIPTION	ORG	CHKD	RVWD	APVD	DATE
0	ISSUED FOR CONSTRUCTION	SJD	RP	EMV	JLT	3/24/16

ISSUED BY RPP-WTP PDC — ISSUE STAMP

PROJECT No.	24590
SITE	HANFORD
AREA	200E
BUILDING No.	25

BECHTEL

RIVER PROTECTION PROJECT
WASTE TREATMENT PLANT
2435 STEVENS CENTER PLACE
RICHLAND, WA 99354

CONTRACT No: DE-AC27-01RV14136

	BY	DATE
ORIGINATOR	Steven Duncan	3/23/16
CHECKER	Robert Pearson	3/23/16
APPROVER	Dennis Wyatt	3/23/16
REVIEWER	[illegible]	3/23/16
APPROVER	[illegible]	3/24/16

CONTENT APPLICABLE TO ALARA? [X] YES [ ] NO
ADR NO. 24590-WTP-ADR-M-16-0001 REV: 1

P&ID - BOF / EMF
DIRECT FEED LAW EMF PROCESS SYSTEM PROCESS AREA SUMPS DEP-SUMP-00003A/B

SCALE: NONE

24590-BOF-M6-DEP-00009004

REV 0

'E' SIZE - 44x34
COMPUTER GENERATED - MANUAL DESIGN CHANGES NOT PERMITTED

R11777707

3/23/2016 7:09:23 AM

PLOTTED BY: jceceni c:\work\jceecnh\dms25914\BOFM6DEP00009004.dgn

FORM E_SDN.DGN 02/2009

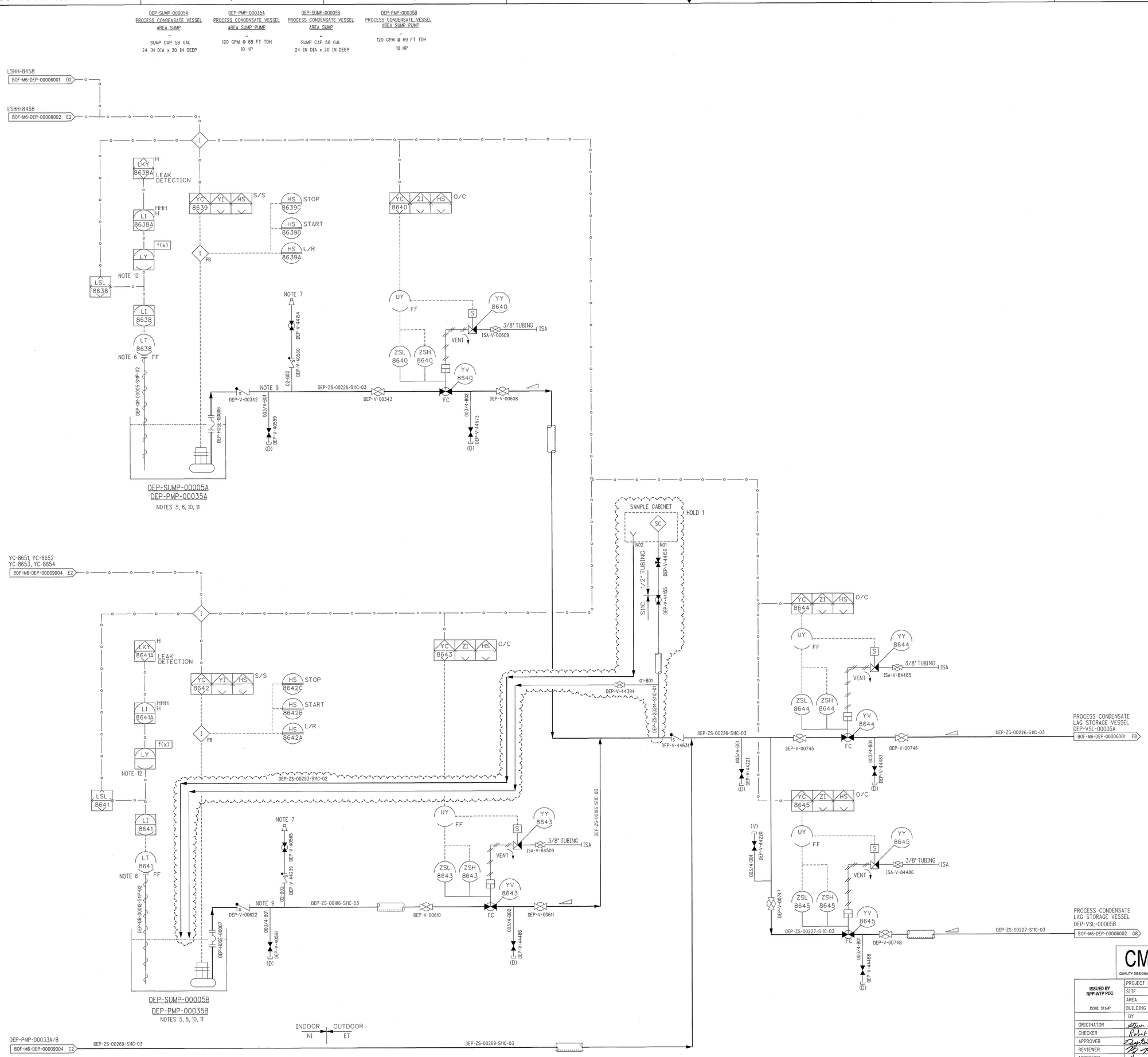

NOTES:

1. SEE DRAWINGS 24590-WTP-M6-50-00001 THROUGH 24590-WTP-M6-50-00008 FOR GENERAL NOTES, SYMBOLS AND LEGEND, AND GENERAL SLOPE REQUIREMENTS.
2. CONTENTS OF THIS DOCUMENT ARE DANGEROUS WASTE PERMIT AFFECTING.
3. THE PRESSURE BOUNDARY FOR ALL COMPONENTS ON THIS DRAWING IS QUALITY LEVEL CM AND SEISMIC CATEGORY SC-IV, UNLESS OTHERWISE NOTED.
4. ALL LINES SHALL BE FREE DRAINING, UNLESS OTHERWISE NOTED.
5. IN THE EVENT OF A LEAK OF EITHER DEP-VSL-00004A/B OR DEP-VSL-00005A/B, DEP-PMP-00035A/B DISCHARGE SHALL BE DIVERTED TO A VESSEL THAT IS NOT LEAKING.
6. STANDPIPE TO BE INSTALLED FROM 1/2" OFF OF THE BOTTOM OF THE SUMP TO 7.5 FEET ABOVE THE SUMP.
7. FOR CONNECTION TO LOCAL DIW UTILITY STATION FOR FLUSHING.
8. LOCATE IN PROCESS CONDENSATE VESSEL AREA (E-0106).
9. LOCATE FLUSH CONNECTION ON THE TOP OF THE PROCESS PIPE AS CLOSE AS POSSIBLE TO CHECK VALVE.
10. SUMP CONTENTS ARE SAMPLED PRIOR TO TRANSFER.
11. SUMP SHALL BE FLAT BOTTOM SUMP.
12. FUNCTION CONVERTS SUMP LEVEL IN INCHES TO GALLONS.

HOLD/OPEN ITEMS:

1. SUMP SAMPLING DESIGN ON HOLD PENDING IDENTIFICATION OF A METHOD OF OBTAINING A SAMPLE WITHOUT REQUIRING THE SUMP PUMP OPERATING. SUMP PUMP MAY REQUIRE MORE LIQUID THEN AVAILABLE WHEN SAMPLE IS REQUIRED. SAMPLE DESIGN SHOULD NOT ALLOW TRANSFER BETWEEN SUMPS.

REFERENCES:

1. 24590-BOF-3ZD-25-00001, WTP DIRECT FEED LOW ACTIVITY WASTE (DFLAW) FACILITY AND SYSTEM DESIGN DESCRIPTIONS.

PLEASE NOTE THAT SOURCE, SPECIAL NUCLEAR AND BYPRODUCT MATERIALS, AS DEFINED IN THE ATOMIC ENERGY ACT OF 1954 (AEA) ARE REGULATED AT THE U.S. DEPARTMENT OF ENERGY (DOE) FACILITIES EXCLUSIVELY BY DOE ACTING PURSUANT TO ITS AEA AUTHORITY. DOE ASSERTS, THAT PURSUANT TO THE AEA IT HAS SOLE AND EXCLUSIVE RESPONSIBILITY AND AUTHORITY TO REGULATE SOURCE, SPECIAL NUCLEAR AND BYPRODUCT MATERIALS AT DOE-OWNED NUCLEAR FACILITIES. INFORMATION CONTAINED HEREIN ON RADIONUCLIDES IS PROVIDED FOR PROCESS DESCRIPTION PURPOSES ONLY.

CM
QUALITY DESIGNATOR

REVISION HISTORY

REV	DESCRIPTION	ORG	CHKD	RVWD	APVD	DATE
0	ISSUED FOR CONSTRUCTION	SJD	RD	BAV	[illegible]	3/24/16

ISSUED BY RPP-WTP PDC
ISSUE STAMP

PROJECT No.	24590	
SITE	HANFORD	
AREA	200E	
BUILDING No.	25	
	BY	DATE
ORIGINATOR	Steven Davison	3/22/16
CHECKER	Robert Porter	3/22/16
APPROVER	[illegible]	3/22/16
REVIEWER	[illegible]	3/22/16
APPROVER	[illegible]	3/24/16

CONTENT APPLICABLE TO ALARA? [X] YES [ ] NO
ADR NO. 24590-WTP-ADR-M-16-0001 REV: 1

BECHTEL

RIVER PROTECTION PROJECT
WASTE TREATMENT PLANT
2435 STEVENS CENTER PLACE
RICHLAND, WA 99354

CONTRACT No: DE-AC27-01RV14136

P&ID - BOF / EMF DIRECT FEED LAW EMF PROCESS SYSTEM PROCESS VESSEL AREA SUMPS DEP SUMP-00005A / B

SCALE: NONE

24590-BOF-M6-DEP-00009005

REV 0

R11777708

"E" SIZE - 44x34
COMPUTER GENERATED - MANUAL DESIGN CHANGES NOT PERMITTED

3/22/2016 11:05:20 AM

PLOTTED BY: jrzecch

c:\work\jrzecch\dms25914\BOFM6DEP00009005.dgn

FORM E_SDN.DGN 02/2009

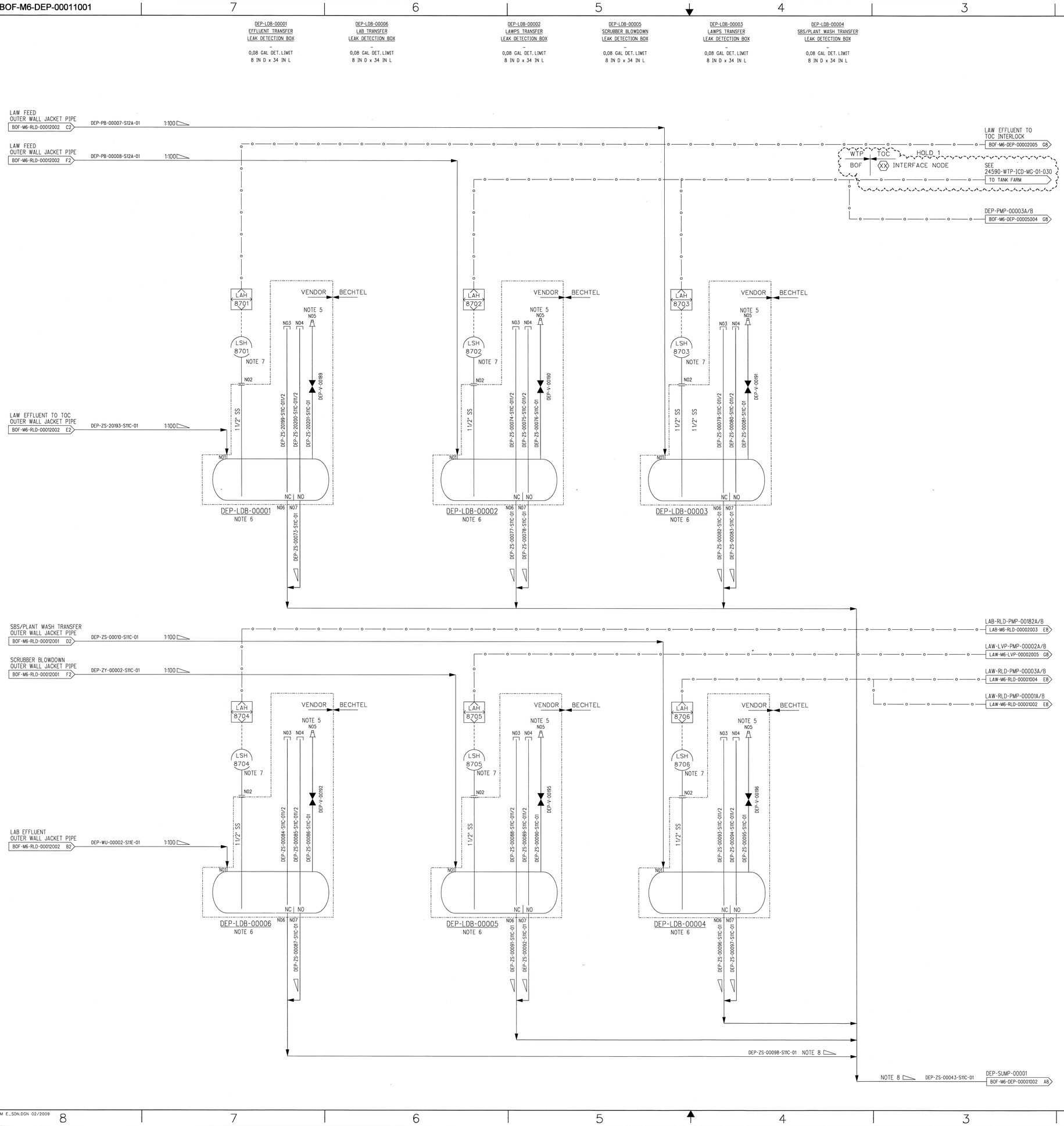

NOTES:

1. SEE DRAWINGS 24590-WTP-M6-50-00001 THROUGH 24590-WTP-M6-50-00008 FOR GENERAL NOTES, SYMBOLS AND LEGEND, AND GENERAL SLOPE REQUIREMENTS.
2. CONTENTS OF THIS DOCUMENT ARE DANGEROUS WASTE PERMIT AFFECTING.
3. THE PRESSURE BOUNDARY FOR ALL COMPONENTS SHOWN ON THIS DRAWING IS QUALITY LEVEL CM AND SEISMIC CATEGORY SC-IV, UNLESS OTHERWISE NOTED.
4. ALL LINES SHOWN ON THIS DRAWING SHALL BE SELF DRAINING, UNLESS OTHERWISE NOTED.
5. QUICK CONNECTION IS PROVIDED FOR PNEUMATIC TESTING OF THE LEAK DETECTION BOX AND THE PIPE JACKET.
6. OVERFLOW AND DRAIN PLUGS OPERATED REMOTELY VIA RODS THAT EXTEND UP TO ELEVATION (-22'-6") THROUGH PIPE SLEEVES. DRAIN PLUG INSTALLED IN THE CLOSED POSITION TO CREATE A DETECTABLE LEVEL. UPON LEVEL DETECTION, THE PLUG IS LIFTED TO DRAIN THE LEAK DETECTION BOX. THE OVERFLOW PLUG IS NORMALLY OPEN FOR OVERFLOW PROTECTION. BOTH PLUGS WILL BE CLOSED FOR PNEUMATIC TESTING.
7. LEVEL SENSOR TO BE MOUNTED DIRECTLY TO THE VENDOR FLANGE.
8. SLOPE COLLECTION HEADER AT 1:100 AS PRACTICAL WITH A MINIMUM SLOPE OF 1:200.

HOLD/OPEN ITEMS:

1. INTERFACE NODE LOCATION AND CONFIGURATION ON HOLD UNTIL SPECIFIED IN 24590-WTP-ICD-MG-01-030.

REFERENCES:

1. 24590-BOF-3ZD-25-00001, WTP DIRECT FEED LOW ACTIVITY WASTE (DFLAW) FACILITY AND SYSTEM DESIGN DESCRIPTIONS.

PLEASE NOTE THAT SOURCE, SPECIAL NUCLEAR AND BYPRODUCT MATERIALS, AS DEFINED IN THE ATOMIC ENERGY ACT OF 1954 (AEA) ARE REGULATED AT THE U.S. DEPARTMENT OF ENERGY (DOE) FACILITIES EXCLUSIVELY BY DOE ACTING PURSUANT TO ITS AEA AUTHORITY. DOE ASSERTS, THAT PURSUANT TO THE AEA IT HAS SOLE AND EXCLUSIVE RESPONSIBILITY AND AUTHORITY TO REGULATE SOURCE, SPECIAL NUCLEAR AND BYPRODUCT MATERIALS AT DOE-OWNED NUCLEAR FACILITIES. INFORMATION CONTAINED HEREIN ON RADIONUCLIDES IS PROVIDED FOR PROCESS DESCRIPTION PURPOSES ONLY.

DRAWING INDEX

DWG NO	TITLE
24590-BOF-M6-DEP-00011001	DEP SYS EFFLUENT FAC LEAK DETECTION DEP-LDB-00001 THRU -00006

CM
QUALITY DESIGNATOR

REVISION HISTORY

REV	DESCRIPTION	ORG	CHKD	RVWD	APVD	DATE
0	ISSUED FOR CONSTRUCTION					4/12/16

ISSUED BY RPP-WTP PDC
ISSUE STAMP

PROJECT No.	24590	
SITE	HANFORD	
AREA	200E	
BUILDING No.	25	
	BY	DATE
ORIGINATOR		4/7/16
CHECKER		4/7/16
APPROVER		4/13/16
REVIEWER		4/7/16
APPROVER		4-7-16
APPROVER		4/7/16

CONTENT APPLICABLE TO ALARA? [X] YES [ ] NO
ADR NO. 24590-WTP-ADR-M-16-0001 REV: 1

RIVER PROTECTION PROJECT
WASTE TREATMENT PLANT
2435 STEVENS CENTER PLACE
RICHLAND, WA 99354

CONTRACT No: DE-AC27-01RV14136

P&ID - BOF/EMF
DIRECT FEED LAW EMF PROCESS SYSTEM
EFFLUENT FACILITY LEAK DETECTION
DEP-LDB-00001 THRU DEP-LDB-00006

SCALE: NONE
24590-BOF-M6-DEP-00011001
REV 0

FORM E_SDN.DGN 02/2009
"E" SIZE - 44x34
COMPUTER GENERATED - MANUAL DESIGN CHANGES NOT PERMITTED
R1176286
4/7/2016 9:46:17 AM
PLOTTED BY: lcsonvic
c:\work\lcsonvic\dms25914\BOF\M6\DEP\00011001.dgn

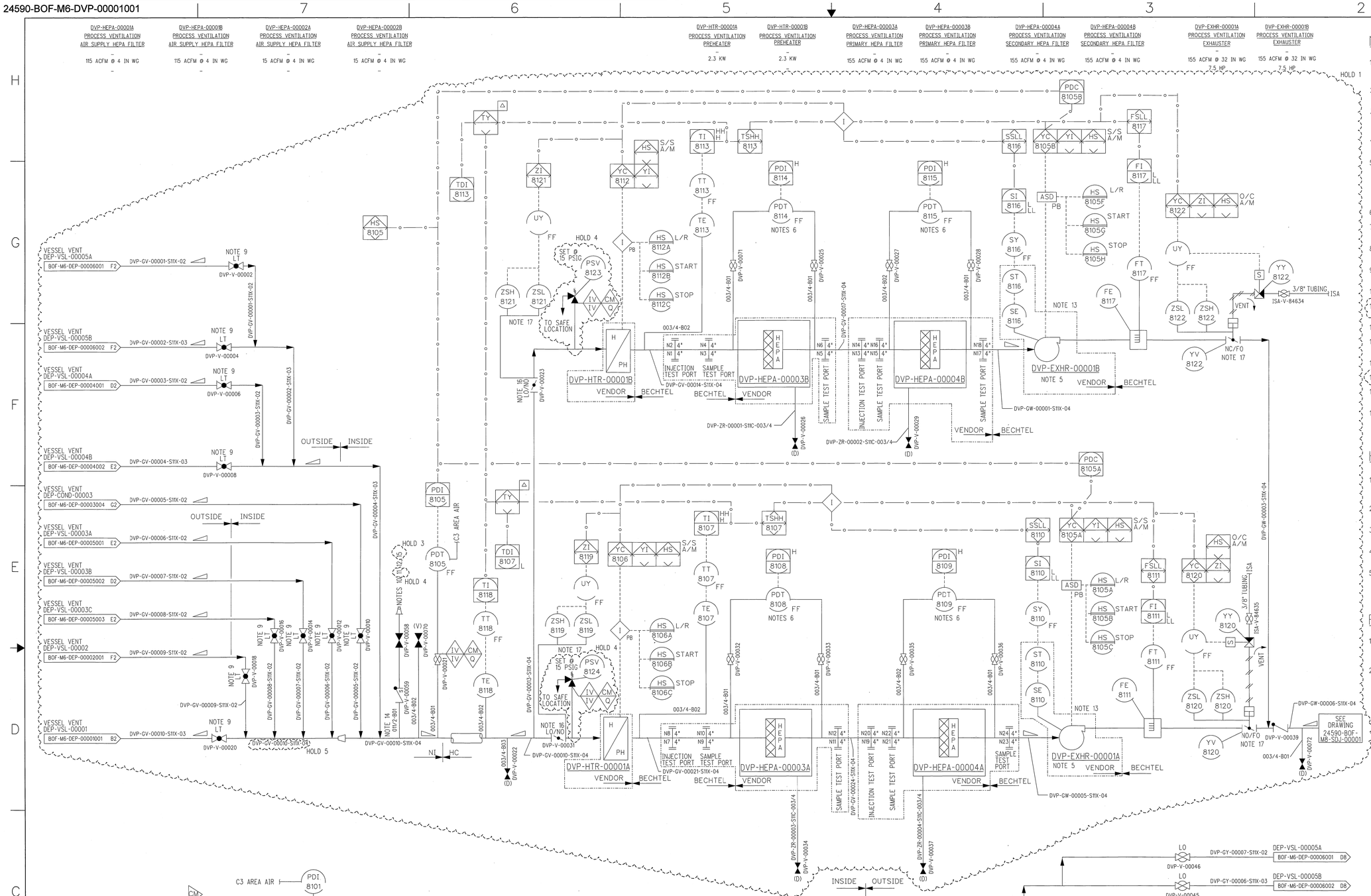

NOTES:

1. SEE DRAWINGS 24590-WTP-M6-50-00001 THROUGH 24590-WTP-M6-50-00008 FOR GENERAL NOTES, SYMBOLS AND LEGEND, AND GENERAL SLOPE REQUIREMENTS.
2. CONTENTS OF THIS DOCUMENT ARE DANGEROUS WASTE PERMIT AFFECTING.
3. THE PRESSURE BOUNDARY FOR ALL COMPONENTS ON THIS DRAWING IS AIR PERMIT AFFECTING AND IS QUALITY LEVEL Q AND SEISMIC CATEGORY SC-IV, UNLESS OTHERWISE NOTED.
4. ALL LINES SHOWN ON THIS DRAWING SHALL BE FREE DRAINING, UNLESS OTHERWISE NOTED.
5. THE DVP EXHAUSTERS ARE 100% CAPACITY UNITS AND WILL BE OPERATED ON A ROTATING BASIS, ONE OPERATING AND ONE STANDBY. THE DISCHARGE VALVE WILL BE CLOSED WHEN THE ASSOCIATED FAN IS IN STANDBY MODE TO MAINTAIN A CONSTANT FLOW PATH, BOTH EXHAUSTER DISCHARGE VALVES SHALL BE OPEN IF NEITHER EXHAUSTER IS RUNNING.
6. TRANSMITTER SHALL BE SUPPLIED WITH LOCAL INDICATION.
7. 24590-BOF-DGCE-MS-16-00004 APPROVES THE USE OF BALL VALVES FOR INSTRUMENT ROOT VALVES.
8. VALVE SHALL BE PROVIDED WITH LOCKING CAPABILITY AND LOCKED OPEN WHEN TRAIN IS IN USE.
9. VALVE SHALL BE POSITIONED TO ESTABLISHED RATES THEN LOCKED.
10. FOR CONNECTION TO LOCAL DIW UTILITY STATION FOR FLUSHING.
11. PRESSURE OF CONNECTING UTILITY NOT TO EXCEED 50 PSIG DESIGN PRESSURE. HOLD 4
12. LOCATE 10 FEET UPSTREAM OF HIGH POINT VENT.
13. INSTRUMENTS DO NOT PERFORM AN AIR PERMIT FUNCTION AND ARE QUALITY LEVEL CM.
14. ANGLE BRANCH TOWARDS DOWNSLOPE OF HEADER.
15. VESSEL RELIEF PATH SHALL REMAIN OPEN DURING FLUSHING. HOLD 3
16. VALVES SHALL STAY OPEN DURING EMF OPERATIONS TO ENSURE VESSEL RELIEF PATH IS OPEN.
17. INSTRUMENT IS Q FOR AIR PERMIT CONFINEMENT BOUNDARY AND DOES NOT INCLUDE FUNCTION.

HOLD/OPEN ITEMS:

1. VESSEL VENT LINE SIZE ON HOLD. THIS HOLD WILL BE RELEASED WHEN MECHANICAL OVERPRESSURE PROTECTION CALCULATION IS ISSUED.
2. LINE SIZE ON HOLD PENDING REVISION OF 24590-BOF-M6C-DVP-00001.
3. NOTE ON HOLD PENDING REVISION OF 24590-BOF-M6C-DIW-00006 TO INCLUDE REQUIREMENT.
4. RELIEF VALVES ON HOLD. HOLD WILL BE RELEASED WHEN CALCULATIONS DETERMINING RELIEF VALVE SIZING IS ISSUED.
5. LINE SIZE ON HOLD PENDING REVISION OF 24590-BOF-M6WX-DVP-00001001.

REFERENCES:

1. 24590-BOF-3ZD-25-00001, WTP EFFLUENT MANAGEMENT (EMF) FACILITY DESIGN DESCRIPTION AND DFLAW EFFLUENT MANAGEMENT FACILITY PROCESS (DEP) SYSTEM DESIGN DESCRIPTION.
2. 24590-BOF-M8-SDJ-00001, BOF/EMF BUILDINGS SDJ PLANT ROOM V&ID EXHAUST STACK MONITORING SYSTEM.

PLEASE NOTE THAT SOURCE, SPECIAL NUCLEAR AND BYPRODUCT MATERIALS, AS DEFINED IN THE ATOMIC ENERGY ACT OF 1954 (AEA) ARE REGULATED AT THE U.S. DEPARTMENT OF ENERGY (DOE) FACILITIES EXCLUSIVELY BY DOE ACTING PURSUANT TO ITS AEA AUTHORITY. DOE ASSERTS, THAT PURSUANT TO THE AEA IT HAS SOLE AND EXCLUSIVE RESPONSIBILITY AND AUTHORITY TO REGULATE SOURCE, SPECIAL NUCLEAR AND BYPRODUCT MATERIALS AT DOE-OWNED NUCLEAR FACILITIES. INFORMATION CONTAINED HEREIN ON RADIONUCLIDES IS PROVIDED FOR PROCESS DESCRIPTION PURPOSES ONLY.

DRAWING INDEX

DWG NO	TITLE
24590-BOF-M6-DVP-00001001	DEP SYS VSL VENT PROCESS SYS DVP-EXHR-00001A/B

REVISION HISTORY

REV	DESCRIPTION	ORG	CHKD	RVWD	APVD	DATE
0	ISSUED FOR CONSTRUCTION	SS				3/24/16

Q QUALITY DESIGNATOR

ISSUED BY RPP-WTP PDC ISSUE STAMP

	PROJECT No.	24590
	SITE	HANFORD
	AREA	200E
	BUILDING No.	25

	BY	DATE
ORIGINATOR		3/24/16
CHECKER		3/24/16
APPROVER		3/24/16
REVIEWER		3/24/16
APPROVER		3/24/16

CONTENT APPLICABLE TO ALARA? [X] YES [ ] NO
ADR NO. 24590-WTP-ADR-M-16-0001 REV: 1

RIVER PROTECTION PROJECT
WASTE TREATMENT PLANT
2435 STEVENS CENTER PLACE
RICHLAND, WA 99354

CONTRACT No: DE-AC27-01RV14136

P&ID - BOF / EMF
DIRECT FEED LAW EMF VESSEL VENT PROCESS SYSTEM DVP-EXHR-00001A/B

SCALE: NONE

24590-BOF-M6-DVP-00001001 REV 0

R1777691

3/24/2016 10:54:25 AM

FORM E_SDN.DGN 02/2009

"E" SIZE - 44x34
COMPUTER GENERATED - MANUAL DESIGN CHANGES NOT PERMITTED

PLOTTED BY jrcech c:\work\jrcech\dms25914\BOFM6DVP00001001.dgn

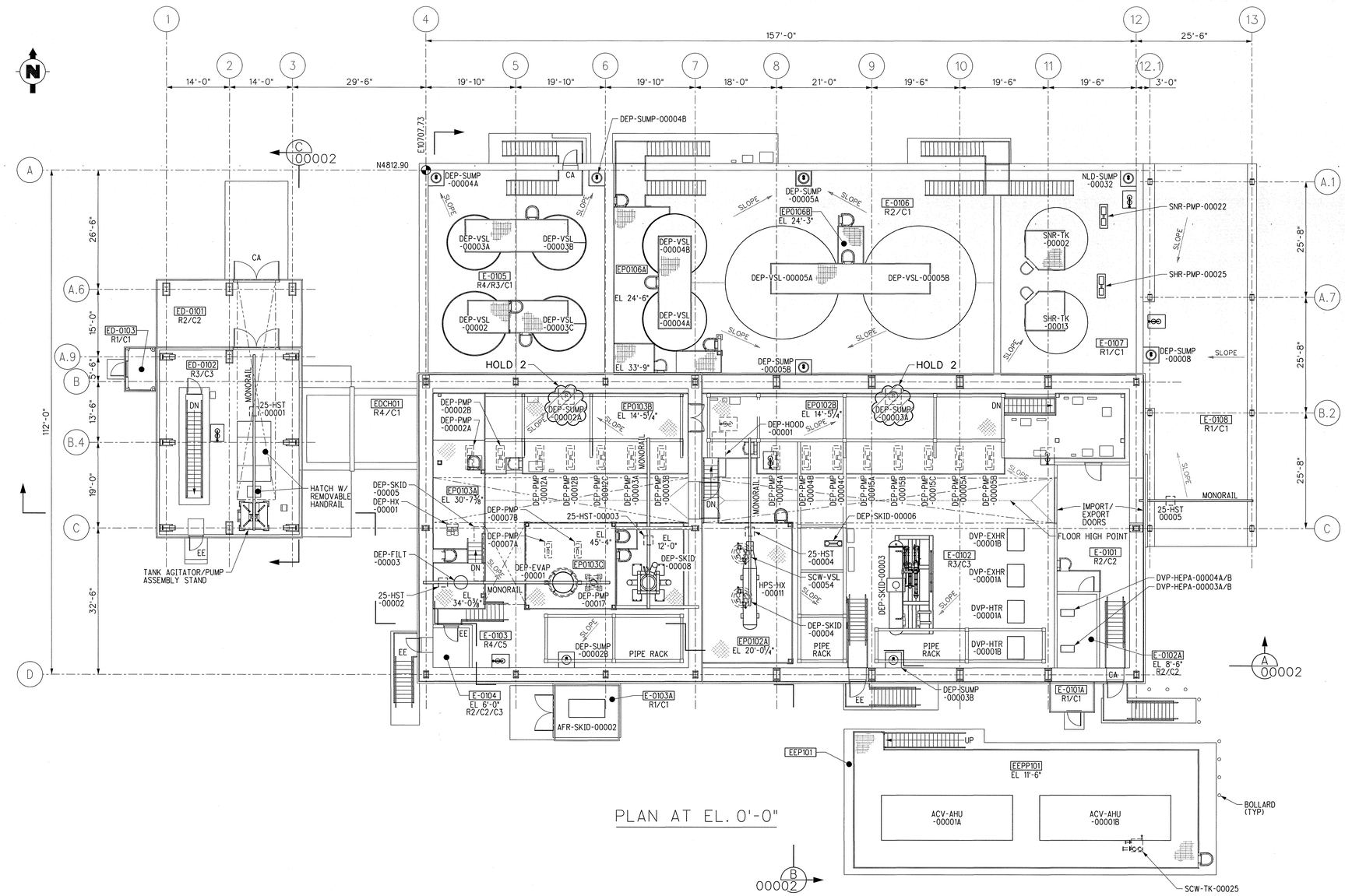

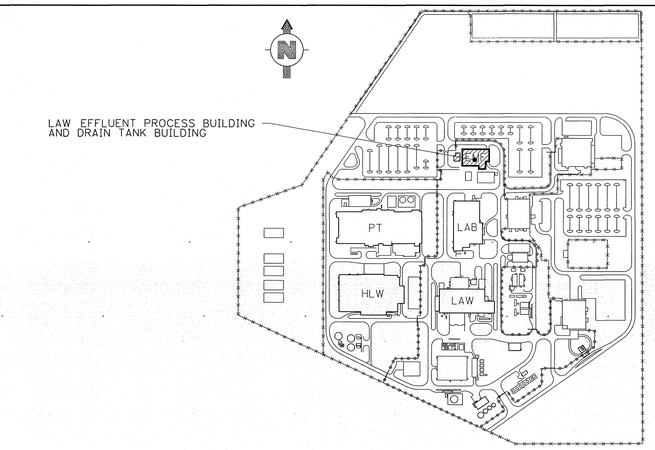

KEY PLAN

GENERAL NOTES:

HOLD 1

1. FOR REFERENCE, SEE PLOT PLAN DWG 24590-BOF-P1-50-00001.
2. REFER TO DRAWING No. 24590-BOF-C2-C12T-00002 FOR CONVERSIONS FROM LAW EFFLUENT PROCESS BLDG TO SITE ELEVATIONS.
3. THE RADIATION/CONTAMINATION CLASSIFICATIONS DEPICTED ON THE DRAWING ARE FOR DESIGN PURPOSES ONLY AND DO NOT NECESSARILY INDICATE HOW THE AREAS WILL BE POSTED (CONTROLLED) DURING RADIOACTIVE OPERATIONS.
4. IBC 2000 REQUIRES A MINIMUM OF 40'-0" SEPARATION OF BUILDINGS WITH NON-RATED WALLS. THIS APPLIES TO BUILDINGS 25, 26 AND 27.

NOTES:

1. CONTENTS OF THIS DOCUMENT ARE DANGEROUS WASTE PERMIT AFFECTING.
2. FLOOR/LINER SLOPE IS REQUIRED IN ROOMS WITH SUMPS. SLOPE IS TO BE A MINIMUM OF 1% TOWARD THE SUMP.
3. PLATFORMS, LANDINGS AND STAIRS IN E-0102, E-0102A, E-0103 AND ED-B001 WILL BE CHECKER PLATE.

HOLDS:

1. GENERAL NOTES 1 AND 2 ON HOLD PENDING REVISION OF REFERENCED DOCUMENTS TO ADD EMF RELATED CONTENT.
2. HOLD LOCATION FOR WALL INSULATION.

LEGEND:

CA	CONTROLLED ACCESS
EE	EMERGENCY EXIT
P.O.S.	POINT OF SUPPORT
T.O.C.	TOP OF CONCRETE
T.O.S.	TOP OF STEEL
	EQUIPMENT REMOVAL/LAY DOWN AREA
	EMERGENCY SHOWER/EYEWASH (PLAN VIEW)
	CONCRETE
	GRATING
	CHECKER PLATE
	SUMP
	SUMP W/SUMP PUMP
	LADDER W/CAGE
E-XXXXX	LAW EFFLUENT PROCESS BLDG ROOM
EPXXXXX	LAW EFFLUENT PROCESS BLDG PLATFORM
EEPXXXXX	LAW EFFLUENT PROCESS BLDG EQUIPMENT PAD
EEPPXXXX	LAW EFFLUENT PROCESS BLDG EQUIPMENT PAD PLATFORM
ED-XXXXX	LAW EFFLUENT DRAIN TANK BLDG ROOM
ED-BXXXX	LAW EFFLUENT DRAIN TANK BLDG ROOM (BELOW GRADE)
EDPBXXXX	LAW EFFLUENT DRAIN TANK BLDG PLATFORM (BELOW GRADE)
EDCHXXX	LAW EFFLUENT DRAIN TANK BLDG CHASE
EU-XXXXX	LAW EFFLUENT UTILITY BLDG ROOM
EUPXXXXX	LAW EFFLUENT UTILITY BLDG PLATFORM

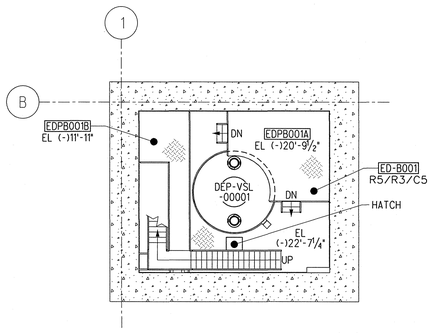

PARTIAL PLAN AT EL. (-)22'-7¼"

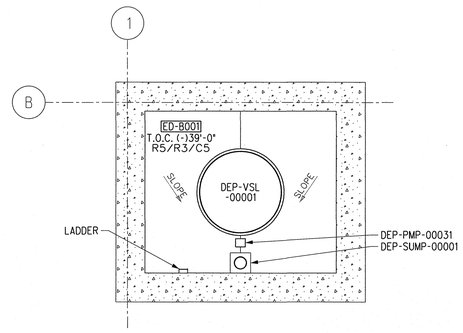

PARTIAL PLAN AT EL. (-)39'-0"

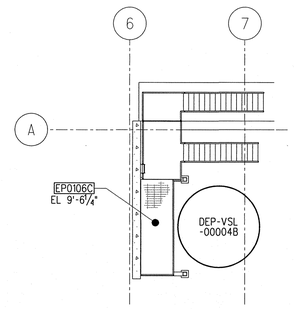

PARTIAL PLAN BELOW EP0106A

REV	DESCRIPTION	ORG	CHKD	RVWD	APVD	DATE
0	ISSUED FOR DESIGN	JTC	SRH			3/4/2016

REVISION HISTORY

ISSUED BY RPP-WTP PDC
ISSUE STAMP

PROJECT No.	24590	
SITE	HANFORD	
AREA	200E	
BUILDING No.	25,25A	
	BY:	DATE
ORIGINATOR		2/5/2016
CHECKER		3/3/2016
APPROVER		3/4/2016
REVIEWER		3/3/2016

CONTENT APPLICABLE TO ALARA? [X] YES [ ] NO
ADR NO. 24590-BOF-ADR-PL-15-0001 REV: 2

Please note that source, special nuclear, and byproduct materials , as defined in the Atomic Energy Act of 1954 (AEA) are regulated at the U. S. Department of Energy (DOE) facilities exclusively by DOE acting pursuant to its AEA authority. DOE asserts that pursuant to AEA, it has sole and exclusive responsibility and authority to regulate source, special nuclear, and byproduct materials at DOE-owned nuclear facilities. Information contained herein on radionuclides is provided for process description purposes only.

BECHTEL
RIVER PROTECTION PROJECT
WASTE TREATMENT PLANT
2435 STEVENS CENTER PLACE
RICHLAND, WA 99354

CONTRACT No: DE-AC27-01RV14136

BALANCE OF FACILITIES LAW EFFLUENT PROCESS BLDG & LAW EFFLUENT DRAIN TANK BLDG GENERAL ARRANGEMENT PLAN AT ELEV. 0'-0"

SCALE: 1"=10'-0"
24590-BOF-P1-25-00001
REV 0

'E' SIZE - 44x34
COMPUTER GENERATED - MANUAL DESIGN CHANGES NOT PERMITTED

FORM E_SDN.DGN 02/2009

R11762903

3/3/2016 1:22:24 PM

c:\work\jtcenter\dms08707\24590-BOF-P1-25-00001 (Rev 0).dgn

R11802055

24590-CM-HC4-HXYG-00240-02-00017 REV 00A

ISSUED BY
RPP-WTP PDC

AREVA

AFS-16-0254

October 25, 2016

Ms. Tess Klatt
Subcontract Administrator
Bechtel National, Inc.
2435 Stevens Center Place
Richland, Washington 99354

Dear Ms. Klatt:

BECHTEL NATIONAL, INC. CONTRACT NO. 24590-CM-HC4-HXYG-00240 IQRPE STRUCTURAL INTEGRITY ASSESSMENT REPORT FOR LAW DFLAW EMF SECONDARY CONTAINMENT (IA-3018007-000)

The integrity assessment of the LAW DFLAW EMF Secondary Containment has been completed per the contract requirements and is enclosed for your use. The assessment found that the design is sufficient to ensure that the Secondary Containment rooms are adequately designed and have sufficient structural strength, compatibility with the waste(s) to be processed/stored/treated, and corrosion protection to ensure that they will not collapse, rupture, or fail.

If you have any questions, please contact Tarlok Hundal at (509) 371-1975, or via email at tarlok.hundal@areva.com.

Sincerely,

Elizabeth W. Smith, C.P.M
Contract Administrator
AREVA Federal Services LLC
Richland Office

Enclosure (1)

lap

cc: D. C. Pfluger, MS12-2A w/enclosure (1)

IQRPE STRUCTURAL INTEGRITY ASSESSMENT REPORT FOR LAW DFLAW EMF SECONDARY CONTAINMENT

Please note that source, special nuclear and byproduct materials, as defined in the Atomic Energy Act of 1954 (AEA), are regulated at the U.S. Department of Energy (DOE) facilities exclusively by DOE acting pursuant to its AEA authority. DOE asserts, that pursuant to the AEA, it has sole and exclusive responsibility and authority to regulate source, special nuclear, and byproduct materials at DOE-owned nuclear facilities. Information contained herein on radionuclides is provided for process description purposes only.

IQRPE STRUCTURAL INTEGRITY ASSESSMENT REPORT FOR LAW DFLAW EMF SECONDARY CONTAINMENT

"I, Tarlok Singh Hundal, have reviewed and certified a portion of the design of a new tank system or component located at the Hanford Waste Treatment Plant, owned/operated by Department of Energy, Office of River Protection, Richland, Washington. My duties were independent review of the current design for the LAW DFLAW EMF Secondary Containment, as required by the Washington Administrative Code, *Dangerous Waste Regulations*, Section WAC-173-303-640(3) (a) through (g) applicable components."

"I certify under penalty of law that I have personally examined and am familiar with the information submitted in this document and all attachments and that, based on my inquiry of those individuals immediately responsible for obtaining the information, I believe that the information is true, accurate, and complete. I am aware that there are significant penalties for submitting false information, including the possibility of fine and imprisonment."

The documentation reviewed indicates that the design fully satisfies the requirements of the WAC.

The attached review is thirteen (17) pages numbered one (1) through seventeen (17).

TARLOK SINGH HUNDAL
STATE OF WASHINGTON
20213
REGISTERED
PROFESSIONAL ENGINEER

T S Hundal
Signature

10/25/2016
Date

Scope	Scope of this Integrity Assessment	This Integrity Assessment addresses the Dangerous Waste Permit (DWP) affecting Secondary Containment for LAW Direct Feed Effluent Management Facility (DFLAW EMF) consisting of the Effluent Drain Tank Building and the Effluent Process Building. The DWP affecting rooms considered in this assessment report are as listed in 24590-BOF-M0C-DEP-00001 and as shown on the General Arrangement Plan drawing 24590-BOF-P1-25-00001 listed under the References below. The DWP affecting rooms identified are: Room ED-B001 at Floor Elevation (-) 39'-0" of the Effluent Drain Tank Building. Rooms E-0102, E-0103, E-0105, and E-0106 at Floor Elevation 0'-0" of the Effluent Process Building.
Summary of Assessment		For each item of "Information Assessed" (i.e., Criteria) on the following pages, the items listed under "Source of Information" were reviewed and found to furnish adequate design requirements and controls to ensure that the design fully satisfies the requirements of Washington Administrative Code (WAC), Chapter 173-303 WAC, *Dangerous Waste Regulations,* WAC-173-303-640, *Tank Systems.*

References	Drawings	24590-BOF-P1-25-00001, Rev. 0, Balance of Facilities LAW Effluent Process Bldg & LAW Effluent Drain Tank Bldg. General Arrangement Plan at Elev. 0'-0"; 24590-BOF-P1-25-00002, Rev. 0, Balance of Facilities LAW Effluent Process Bldg & LAW Effluent Drain Tank Bldg. General Arrangement Sections A, B, & C; 24590-BOF-A5-25-05200001, Rev. 0, LAW Effluent Process Bldg. 25 & Drain Tank Bldg. 25A, Architectural Room Finish Schedule; 24590-BOF-CE-25-00001, Rev. 0, LAW Effluent Drain Tank Building Excavation and Mudmat Plan; 24590-BOF-CE-25-00002, Rev. 0, LAW Effluent Drain Tank Building Excavation and Mudmat Sections and Details; 24590-BOF-CE-25-00003, Rev. 1, LAW Effluent Process, Utility, Electrical, Drain Tank Bldg and Stack Excavation Plan; 24590-BOF-CE-25-00004, Rev. 1, LAW Effluent Process, Utility, Electrical, Drain Tank Bldg and Stack Sections and Details; 24590-BOF-D0-25-00001, Rev. 0, Effluent Management Facility Civil/Structural Standards General and Concrete Notes; 24590-BOF-DB-25-00001, Rev. 0, LAW Effluent Process Bldg. 25 Drain Tank Bldg. 25A, Concrete Forming Overall Key Plan; 24590-BOF-DB-25-00002, Rev. 0, LAW Effluent Process Bldg. 25 Concrete Forming Key Plan, El. 0'-0"; 24590-BOF-DB-25-00020, Rev. 1, LAW Effluent Process Bldg. 25 Concrete Forming Partial Plan at El. 0'-0" Zone 2; 24590-BOF-DB-25-00021, Rev. 1, LAW Effluent Process Bldg. 25 Concrete Forming Partial Plan at El. 0'-0" Zone 3; 24590-BOF-DB-25-00023, Rev. 1, LAW Effluent Process Bldg. 25 Concrete Forming Partial Plan at El. 0'-0" Zone 5; 24590-BOF-DB-25-00024, Rev. 1, LAW Effluent Process Bldg. 25 Concrete Forming Partial Plan at El. 0'-0" Zone 6; 24590-BOF-DB-25-00030, Rev. 1, LAW Effluent Process Bldg. 25 Concrete Forming Section Column Line A; 24590-BOF-DB-25-00031, Rev. 1, LAW Effluent Process Bldg. 25 Concrete Forming Section Column Line B; 24590-BOF-DB-25-00032, Rev. 1, LAW Effluent Process Bldg. 25 Concrete Forming Section Column Line D; 24590-BOF-DB-25-00033, Rev. 1, LAW Effluent Process Bldg. 25 Concrete Forming Section Column Line 4; 24590-BOF-DB-25-00034, Rev. 1, LAW Effluent Process Bldg. 25 Concrete Forming Section Column Lines 6 and 7; 24590-BOF-DB-25-00035, Rev. 1, LAW Effluent Process Bldg. 25 Concrete Forming Section Column Line 10.4; 24590-BOF-DB-25-00036, Rev. 1, LAW Effluent Process Bldg. 25 Concrete Forming Section Column Line 12; 24590-BOF-DB-25-00100, Rev. 0, LAW Effluent Drain Tank Building 25A Concrete Forming Plan-Zone 1 @ El. (-) 39'-0"; 24590-BOF-DB-25-00103, Rev. 0, LAW Effluent Drain Tank Building 25A Concrete Forming Sections-Zone 1; 24590-BOF-DD-25-00001, Rev. 0, Effluent Management Facility Standard Embedded Item Details; 24590-BOF-DD-25-00004, Rev. 0, Effluent Management Facility Vessel Support Ring Beam Details; 24590-BOF-DD-25-00010, Rev. 0, Effluent Management Facility Liner Plate Grillage Sections and Details: 24590-BOF-DD-25-00012, Rev. 0, Effluent Management Facility Concrete Embedment Details Vessel Support Ring Beam Installation: 24590-BOF-DD-25-00013, Rev. 0, Effluent Management Facility Embedded Stanchion Details: 24590-BOF-DD-25-00014, Rev. 0, Effluent Management Facility 24" Dia. Sump With Grate Cover Sections and Details; 24590-BOF-DD-25-00015, Rev. 0, Effluent Management Facility 24" Dia. Sump in Secondary Containment Sections and Details; 24590-BOF-DD-25-00016, Rev. 1, Effluent Management Facility Concrete Embedment Details;

References (cont'd)	Drawings	24590-BOF-DD-25-00020, Rev. 1, LAW Effluent Process Bldg. 25, Concrete Embedments Partial Plan at El. 0'-0" Zone 2; 24590-BOF-DD-25-00021, Rev. 1, LAW Effluent Process Bldg. 25, Concrete Embedments Partial Plan at El. 0'-0" Zone 3; 24590-BOF-DD-25-00022, Rev. 1, LAW Effluent Process Bldg. 25, Concrete Embedments Partial Plan at El. 0'-0" Zone 4; 24590-BOF-DD-25-00023, Rev. 1, LAW Effluent Process Bldg. 25, Concrete Embedments Partial Plan at El. 0'-0" Zone 5; 24590-BOF-DD-25-00024, Rev. 1, LAW Effluent Process Bldg. 25, Concrete Embedments Partial Plan at El. 0'-0" Zone 6; 24590-BOF-DD-25-00028, Rev. 1, LAW Effluent Process Bldg. 25, Concrete Embedments Key Plan @ El. 0'-0"; 24590-BOF-DD-25-00100, Rev. 0, LAW Effluent Process Bldg. 25, Concrete Embedments Plan-Zone 1 @ El. (-) 39'-0"; 24590-BOF-DG-25-00001, Rev. 1, LAW Effluent Process Building 25, Concrete Reinforcement Plan @ El. 0'-0"; 24590-BOF-DG-25-00003, Rev. 1, LAW Effluent Process Building 25, Concrete Reinforcement Sections and Details Sheet 1; 24590-BOF-DG-25-00004, Rev. 1, LAW Effluent Process Building 25, Concrete Reinforcement Sections and Details Sheet 2; 24590-BOF-DG-25-00005, Rev. 1, LAW Effluent Process Building 25, Concrete Reinforcement Sections and Details Sheet 3; 24590-BOF-DG-25-00100, Rev. 0, LAW Effluent Drain Tank Building 25A, Concrete Reinforcing Plan-Zone 1 @ El. (-) 39'-0"; 24590-BOF-DG-25-00103, Rev. 0, LAW Effluent Drain Tank Building 25A, Concrete Reinforcing Sections-Zone 1; 24590-BOF-M6-DEP-00009001, Rev. 0, P&ID-BOF/EMF Direct Feed LAW EMF Process System Process Area Sumps DEP-SUMP-00002A/B; 24590-BOF-M6-DEP-00009002, Rev. 0, P&ID-BOF/EMF Direct Feed LAW EMF Process System Process Area Sumps DEP-SUMP-00004A/B; 24590-BOF-M6-DEP-00009004, Rev. 0, P&ID-BOF/EMF Direct Feed LAW EMF Process System Process Area Sumps DEP-SUMP-00003A/B; 24590-BOF-M6-DEP-00009005, Rev. 0, P&ID-BOF/EMF Direct Feed LAW EMF Process System Process Area Sumps DEP-SUMP-00005A/B; 24590-BOF-M6-DEP-00001002, Rev. 0, P&ID-BOF/EMF Direct Feed LAW EMF Process System Low Point Drain Vessel Pumps DEP-PMP-00001A/B.

Information		Source of Information	Assessment
Foundation Design	Description of subsurface conditions and soil bearing capacity are adequate.	24590-BOF-PER-M-16-003, Rev. 0, Dangerous Waste Permit (DWP) Liner Heights in the Effluent Management Facility (EMF); 24590-BOF-M0C-DEP-00001, Rev. B, Liner Height Calculations in the EMF; 24590-WTP-DC-ST-01-001, Rev. 13, Structural Design Criteria; 24590-BOF-3PS-CE00-T0001, Rev. 0, Technical Specification for Site Work; 24590-BOF-3PS-CE01-T0001, Rev. 7, Engineering Specification for Excavation and Backfill; 24590-BOF-3PS-CE01-T0002, Rev. 0, Engineering Specification for Installation of Drilled Shafts & Cast-in-Place Caissons; 24590-BOF-3PS-CP00-T0001, Rev. 0, Engineering Specification for Shoring for Deep Excavation; 24590-BOF-3PS-C000-T0001, Rev. 6, Engineering Specification for Material Testing Services; 24590-BOF-S0C-25-00001, Rev. A, LAW Effluent Process Building Load Case Load Combination Development; 24590-BOF-S0C-25-00002, Rev. B, LAW Effluent Process Building Finite Element Model; 24590-BOF-DBC-25-00001, Rev. A, LAW Effluent Process Concrete Basemat and Wall Design; 24590-BOF-DBC-25-00002, Rev. A, LAW Effluent Drain Tank Building Design; WTSC99-1036-42-17, Final Report Geotechnical Investigation, Shannon & Wilson Inc. (H-1616-51); CCN 179563, Report of Supplementary Geotechnical Engineering Study, RPP-WTP, Hanford Site, Richland, WA, April 2001; 24590-WTP-RPT-CSA-16-001, Rev. 0, Geotechnical Evaluation of EMF Facilities Excavation and Backfill Operations and Design Recommendations.	The Dangerous Waste Permit document lists the rooms at various elevations in EMF buildings requiring the secondary containment. Details of the secondary containment requirements in each room are identified in the above document. The Structural Design Criteria adequately presents design guidance for concrete basemat and walls, based on the Geotechnical Investigation (GI) report, Geotechnical Engineering Study (GES), and Geotechnical Evaluation (GE) reports for the site. The GI report concluded that the liquefaction of the subsurface soil is unlikely during an earthquake event because the ground water table is about 275 ft below the ground surface at the WTP facility. The allowable bearing capacities for Hanford Upper Sand and Structural Fill are listed as 5 ksf. Use of the loose wind blown (dune) sands for foundations is precluded. The design calculations of EMF Basemat and Drain Tank reviewed indicate that the 5 ksf allowable soil bearing capacity of subsurface soil below the foundation mat is more than the maximum computed values. The Specifications listed in the Source of Information column provide excavation and shoring requirements for appropriate application. These Specifications also provide requirements for installation of structural backfill based on the GI report. Appropriate current codes and standards are listed for selection, placing, and compacting structural backfill including testing of candidate fill materials and completed backfills. The Specification for Material Testing Services provides current adequate codes and standards for testing of candidate structural fill materials and in-situ testing of structural fills as they are constructed. Review of the design calculations shows that appropriate values of the soil parameters including allowable bearing capacity were used for the design of secondary containment structures.

	Information	Source of Information	Assessment
Foundation Design (cont'd)	Foundation design loads (including full tanks) and estimated settlement are adequately considered.	24590-WTP-DC-ST-01-001, Rev. 13, Structural Design Criteria; ASCE 7-98, Minimum Design Loads for Buildings and Other Structures; ACI 318-99, Building Code Requirements for Structural Concrete, American Concrete Institute; UBC 1997, Uniform Building Code, International Conference of Building Officials; 24590-BOF-DBC-25-00001, Rev. A, LAW Effluent Process Concrete Basemat and Wall Design; 24590-BOF-DBC-25-00002, Rev. A, LAW Effluent Drain Tank Building Design.	The Structural Design Criteria uses current adequate standards to define design loads and load combinations (ASCE 7-98, UBC 1997, and ACI 318-99). Dead and fluid loads are included in these loads and load combinations. Settlement design parameters are included in Section 7.8 of the Structural Design Criteria. Review of the design calculations for floor slabs shows that the full loads of the tanks and other applicable equipment including the applicable seismic loads and displacements induced forces from other components and soil loads have been appropriately considered in the foundation design.

	Information	Source of Information	Assessment
Foundation Design (cont'd)	Design calculation approach and design basis of footings with design standard references (e.g., ACI) are adequate.	Drawing listed above under References; 24590-BOF-3ZD-25-00001, Rev. 0, WTP Direct Feed Low Activity Waste (DFLAW) Facility and System Design Descriptions; 24590-WTP-DC-ST-01-001, Rev. 13, Structural Design Criteria; ACI 318-99, Building Code Requirements for Structural Concrete, American Concrete Institute; UBC 1997, Uniform Building Code, International Conference of Building Officials; 24590-WTP-PER-CSA-02-001, Rev. 11, Secondary Containment Design; 24590-BOF-DBC-25-00001, Rev. A, LAW Effluent Process Concrete Basemat and Wall Design; 24590-BOF-DBC-25-00002, Rev. A, LAW Effluent Drain Tank Building Design; 24590-LAW-SSC-S15T-00025, Rev. 0, Tank Base Ring Design, Elevation + 2'-3"; 24590-BOF-S0C-25-00001, Rev. A, LAW Effluent Process Building Load Case and Load Combination Development; 24590-BOF-S0C-25-00002, Rev. A, LAW Effluent Process Building Finite Element Model; 24590-BOF-DDC-25-00001, Rev. A, LAW Effluent Process and Drain Tank Buildings Vessels Support Anchorage Design; 24590-BOF-DDC-25-00003, Rev. A, LAW Effluent Process Building Evaporator and Equipment Support Anchorage Design; 24590-WTP-UIF-CSA-10-0001, Rev. 4, User Information Form for GTSTRUDL, Version 30 (V&V Document).	The DFLAW Facility and System Design Descriptions document and drawings list the DFLAW facility as Quality Level (CM) and Seismic Category (SC-IV) structure. The Structural Design Criteria references current adequate design criteria for the design of concrete foundations and footings. ACI 318-99 and UBC 1997 codes are referenced for the strength design of commercial grade structures. The Secondary Containment Design document provides the design approach, basis, and methodology used for the design of the secondary containment foundations/footings. The input parameters used in the GTSTRUDL computer code utilized for this secondary containment design are appropriate and the output results have been appropriately validated via the Verification & Validation (V & V) document. Review of the requirement documents and design calculations shows that the design basis and approach, methodology, and the codes and standards used are appropriate for the foundation design to adequately withstand the applicable loads including the seismic and soil loads.

	Information	Source of Information	Assessment
Foundation Design (cont'd)	Foundation material is compatible with the soil.	24590-WTP-3PS-D000-T0001, Rev. 8, Engineering Specification for Concrete Work, including SCN 24590-WTP-3PN-D000-00020; 24590-WTP-3PS-DB01-T0001, Rev. 8, Engineering Specification for Furnishing and Delivering Ready-Mix Concrete, including SCN 24590-WTP-3PN-DB01-00014; 24590-BOF-3PS-C000-T0001, Rev. 6, Engineering Specification for Material Testing Services; 24590-WTP-DB-ENG-01-001, Rev. 3, Basis of Design. 24590-WTP-3PS-DG00-T0001, Rev. 6, Engineering Specification for Furnishing of Reinforcing Steel.	The specification documents for Concrete Work and Furnishing and Delivering Ready-Mix Concrete provide adequate current requirements for design, testing, and the selection of coarse and fine aggregates and the procurement of cementitious materials. Adequate test procedures are provided in the Material Testing Services specification for testing candidate aggregates for chemical reactivity. Instructions for mixing and delivering Ready-Mix Concrete are adequate and current. As noted in Section 4.7 of the Basis of Design document, the water table lies more than 250 feet below the ground surface elevation of the DFLAW Facility Site, so there is little reason to expect compatibility problems between the concrete foundations and the site soils.
	Foundation will withstand the effects of frost heave	Drawings listed above under References; 24590-WTP-DC-ST-01-001, Rev. 13, Structural Design Criteria.	The Structural Design Criteria includes adequate provisions to preclude frost heave in the section addressing lateral earth pressure loads. All structural foundations are required to extend into the soil below the frost line to preclude frost heave. The frost line is 30 inches below the finished grade surface, however, the drawings show that the top elevation of the EMF 5 ft. thick concrete slab is 0'-0" and it extends 4'-6" into the soil, which is more the 30 inches frost line depth, and the top of Drain Tank Building slab is at Elev. (-) 39'-0". From aforementioned dimensions, it is concluded that the secondary containment foundations will not be subjected to frost heave effects.

	Information	Source of Information	Assessment
Seismic Design	Seismic considerations have been adequately addressed.	24590-WTP-PER-CSA-02-001, Rev. 11, Secondary Containment Design; 24590-WTP-DC-ST-01-001, Rev. 13, Structural Design Criteria; ACI 318-99, Building Code Requirements for Structural Concrete, American Concrete Institute; UBC 1997, Uniform Building Code, International Conference of Building Officials; 24590-BOF-DBC-25-00001, Rev. A, LAW Effluent Process Concrete Basemat and Wall Design; 24590-BOF-DBC-25-00002, Rev. A, LAW Effluent Drain Tank Building Design; 24590-LAW-SSC-S15T-00025, Rev. 0, Tank Base Ring Design, Elevation + 2'-3"; 24590-BOF-S0C-25-00001, Rev. A, LAW Effluent Process Building Load Case and Load Combination Development; 24590-BOF-S0C-25-00002, Rev. A, LAW Effluent Process Building Finite Element Model; 24590-BOF-DDC-25-00001, Rev. A, LAW Effluent Process and Drain Tank Buildings Vessels Support Anchorage Design; 24590-BOF-DDC-25-00003, Rev. A, LAW Effluent Process Building Evaporator and Equipment Support Anchorage Design; 24590-WTP-UIF-CSA-10-0001, Rev. 4, User Information Form for GTSTRUDL, Version 30 (V&V Document). `	The Secondary Containment Design document describes and provides references for the design methodology, materials, loads, and load combinations (including seismic loads) for the EMF Buildings secondary containment. The Structural Design Criteria provides detailed discipline specific codes and standards for the design of Seismic Category (SC-IV) EMF secondary containment foundations and structures by the design engineers. ACI 318-99 and UBC 1997 provide the design codes and load combinations for design of the secondary containment reinforced concrete foundations and structures. UBC 1997 is used for guidance on seismic analysis of SC-IV structures. The GTSTRUDL structural software code is used for concrete design. The codes and standards listed above are adequate and acceptable for addressing seismic considerations. Review of the design calculations shows that the requirements of the applicable codes and standards are appropriately incorporated in these documents and output results were verified per V&V Test Reports. The review also concluded that the secondary containment components including the liner materials are adequately designed to withstand seismic forces and displacements.

	Information	Source of Information	Assessment
Compatibility	The stored waste is compatible with its Secondary Containment and leak detection hardware based on a detailed chemical and physical analysis of the wastes used and other information sources.	Drawings listed above under References; 24590-WTP-DB-ENG-01-001, Rev. 3, Basis of Design; 24590-WTP-PER-M-02-001, Rev. 4, Material Selections for Building Secondary Containment/Leak Detection; 24590-WTP-PER-J-02-002, Rev. 4, Leak Detection in Secondary Containment Systems; 24590-WTP-PER-CSA-02-001, Rev. 11, Secondary Containment Design; 24590-WTP-3PS-AFPS-T0006, Rev. 3, Engineering Specification for Field Applied Special Protective Coatings for Secondary Containment Areas; 24590-WTP-3PS-NLLR-T0002, Rev. 1, Engineering Specification for Furnishing, Detailing, Fabrication, Delivery and Installation of Stainless Steel Liner Plates. 24590-BOF-PER-M-16-003, Rev. 0, Dangerous Waste Permit (DWP) Liner Heights in the Effluent Management Facility (EMF); 24590-BOF-M0C-DEP-00001, Rev. B, Liner Height Calculations in the EMF; 24590-BOF-PER-M-16-001, Rev. 0, Leak Detection Capability in the EMF Facility.	The Basis of Design document states that cells and sumps are appropriately lined and any spills are removed and flushed within 24-hrs or as timely as possible. The Secondary Containment Design document requires the use of stainless steel liner or special protective coatings (SPC) liner for various rooms of the EMF facility. The Liner Heights document provides the required specific liner heights in various rooms. Based on detailed analysis of the corrosive properties of expected waste process operations and evaluation of potential leak scenarios, the Material Selection report identifies appropriate and adequate corrosion resistant materials requirements for Secondary Containment liners, sumps and leak detection equipment. The Engineering Specification for Field Applied Special Protective Coatings provides the selection test criteria used to determine acceptable approved coating systems. These test criteria include chemical resistance endurance requirements and wear abrasion resistance criteria which provides liners compatibility with the wastes considered. The Secondary Containment Design document provides adequate typical construction details for liners including tank anchorage details, stainless steel liner installation details and SPC installation details to be used for Secondary Containment. The DWP affecting rooms are provided with floor sumps, leak detection instrumentation and associate pumps that can transfer the leaked/accumulated liquid waste to process vessels for storage and subsequent processing as shown on the P&ID drawings.

	Information	Source of Information	Assessment
Strength	The design shows that the Secondary Containment has sufficient strength and thickness to prevent failure owing to pressure gradients, static head during a release, physical contact with the waste, climatic conditions, and the stress of daily operations (e.g., vehicular traffic).	Drawings listed above under References; 24590-WTP-DC-ST-01-001, Rev. 13, Structural Design Criteria; 24590-WTP-PER-CSA-02-001, Rev. 11, Secondary Containment Design; 24590-WTP-3PS-NLLR-T0002, Rev. 1, Engineering Specification for Furnishing, Detailing, Fabrication, Delivery and Installation of Stainless Steel Liner Plates; 24590-WTP-PER-M-02-001, Rev. 4, Material Selections for Building Secondary Containment/Leak Detection; 24590-WTP-PER-J-02-002, Rev. 4, Leak Detection in Secondary Containment Systems; 24590-BOF-DBC-25-00001, Rev. A, LAW Effluent Process Concrete Basemat and Wall Design; 24590-BOF-DBC-25-00002, Rev. A, LAW Effluent Drain Tank Building Design; 24590-LAW-SSC-S15T-00025, Rev. 0, Tank Base Ring Design, Elevation + 2'-3"; 24590-BOF-S0C-25-00001, Rev. A, LAW Effluent Process Building Load Case and Load Combination Development; 24590-BOF-S0C-25-00002, Rev. A, LAW Effluent Process Building Finite Element Model; 24590-BOF-DDC-25-00001, Rev. A, LAW Effluent Process and Drain Tank Buildings Vessels Support Anchorage Design; 24590-BOF-DDC-25-00003, Rev. A, LAW Effluent Process Building Evaporator and Equipment Support Anchorage Design; 24590-BOF-DDC-25-00004, Rev. A, LAW Effluent Process and Drain Tank Buildings Sumps and Liner Grillage Anchorage Design; 24590-WTP-UIF-CSA-10-0001, Rev. 4, User Information Form for GTSTRUDL, Version 30 (V&V Document).	Because the Rooms ED-B001, E-0102, and E-0103 Secondary Containment structures being considered are installed within the boundary walls of the EMF Buildings as shown on the general arrangement drawings, climatic conditions and vehicular traffic are not applicable load cases. However, Rooms E-0105 and E-0106 are located outside the EMF Process Building, therefore, are subjected to climatic conditions, but not to any vehicular traffic. The Secondary Containment design requirements document identifies adequate and appropriate design codes and standards and all applicable load cases (operational stresses) from site specific conditions have been considered in the design. The Engineering Specification for Furnishing Stainless Steel Liner Plates includes specific provisions for protection of and repair of completed liners during the construction process. Factors that were considered during stainless steel liner material selection and special protective coating (SPC) material selection are adequately discussed in the Material Selections for Building Secondary Containment/Leak Detection document. Review of the design calculations shows that the secondary containment structures are designed appropriately with sufficient strength to sustain the applicable loads.

	Information	Source of Information	Assessment
Strength (cont'd)	The Secondary Containment system has sufficient strength in the presence of operational stresses from site-specific conditions (i.e., traffic, heavy equipment, precipitation, frost).	Drawings listed above under References; 24590-WTP-DC-ST-01-001, Rev. 13, Structural Design Criteria; 24590-WTP-PER-CSA-02-001, Rev. 11, Secondary Containment Design; 24590-WTP-3PS-AFPS-T0006, Rev. 3, Engineering Specification for Field Applied Special Protective Coatings for Secondary Containment Areas; 24590-WTP-3PS-NLLR-T0002, Rev. 1, Engineering Specification for Furnishing, Detailing, Fabrication, Delivery and Installation of Stainless Steel Liner Plates; 24590-WTP-PER-M-02-001, Rev. 4, Material Selections for Building Secondary Containment/Leak Detection; 24590-WTP-PER-J-02-002, Rev. 4, Leak Detection in Secondary Containment Systems; 24590-BOF-DBC-25-00001, Rev. A, LAW Effluent Process Concrete Basemat and Wall Design; 24590-BOF-DBC-25-00002, Rev. A, LAW Effluent Drain Tank Building Design; 24590-LAW-SSC-S15T-00025, Rev. 0, Tank Base Ring Design, Elevation + 2'-3"; 24590-BOF-S0C-25-00001, Rev. A, LAW Effluent Process Building Load Case and Load Combination Development; 24590-BOF-S0C-25-00002, Rev. A, LAW Effluent Process Building Finite Element Model; 24590-BOF-DDC-25-00001, Rev. A, LAW Effluent Process and Drain Tank Buildings Vessels Support Anchorage Design; 24590-BOF-DDC-25-00003, Rev. A, LAW Effluent Process Building Evaporator and Equipment Support Anchorage Design; 24590-BOF-DDC-25-00004, Rev. A, LAW Effluent Process and Drain Tank Buildings Sumps and Liner Grillage Anchorage Design; 24590-WTP-UIF-CSA-10-0001, Rev. 4, User Information Form for GTSTRUDL, Version 30 (V&V Document).	The Secondary Containment Design requirements document identifies adequate and appropriate design codes and standards and all applicable load cases (operational stresses) from site specific conditions that must be considered in the design. The secondary containment rooms listed in the Scope section above are shown on the general arrangement plan drawings of the EMF facility. Room ED-B001 is located at floor Elevation (-) 39'-0" of the Drain Tank Building and Rooms E-0102, E-0103 are located inside the EMF process on floor Elevation 0'-0." The aforementioned three rooms are inside the buildings which protect them from the precipitation and surface water percolation. Rooms E-0105 and E-0106 are outside of the covered portion of the he EMF process building, which are subjected to precipitation and outside moisture. None of the rooms are subjected to traffic, movement of heavy equipment, and frost are not applicable load cases. The Specification for Furnishing Stainless Steel Liner Plates and the Specification for Field Applied Special Protective Coatings for Secondary Containment Areas include specific provisions for protection and repair of completed liners during the construction process. The room finish schedule drawing identifies the specific liner materials used for secondary containment rooms. Review of the design calculations shows that the secondary containment structures are designed appropriately with sufficient strength to sustain the applicable loads from the specific conditions. Factors that were considered during stainless steel liner material selection and SPC liner material selection are adequately discussed in the Material Selections for Building Secondary Containment/Leak Detection document.

	Information	Source of Information	Assessment
Foundation Integrity	The Secondary Containment is properly supported by a foundation or base in order to prevent failure from settlement, compression, or uplift, including the residual effects of installation.	Drawings listed above under References; 24590-WTP-DC-ST-01-001, Rev. 13, Structural Design Criteria; 24590-BOF-3PS-CE00-T0001, Rev. 0, Technical Specification for Site Work. 24590-WTP-3PS-D000-T0001, Rev. 8, Engineering Specification for Concrete Work, including SCN # 24590-WTP-3PN-D000-00020; 24590-BOF-3PS-CE01-T0001, Rev. 7, Engineering Specification for Excavation and Backfill; 24590-BOF-3PS-C000-T0001, Rev. 6, Engineering Specification for Material Testing Services; 24590-WTP-PER-CSA-02-001, Rev. 11, Secondary Containment Design. 24590-BOF-DBC-25-00001, Rev. A, LAW Effluent Process Concrete Basemat and Wall Design; 24590-BOF-DBC-25-00002, Rev. A, LAW Effluent Drain Tank Building Design; 24590-LAW-SSC-S15T-00025, Rev. 0, Tank Base Ring Design, Elevation + 2'-3"; 24590-BOF-S0C-25-00001, Rev. A, LAW Effluent Process Building Load Case and Load Combination Development; 24590-BOF-S0C-25-00002, Rev. A, LAW Effluent Process Building Finite Element Model; 24590-BOF-DDC-25-00001, Rev. A, LAW Effluent Process and Drain Tank Buildings Vessels Support Anchorage Design; 24590-BOF-DDC-25-00003, Rev. A, LAW Effluent Process Building Evaporator and Equipment Support Anchorage Design; 24590-BOF-DDC-25-00004, Rev. A, LAW Effluent Process and Drain Tank Buildings Sumps and Liner Grillage Anchorage Design; 24590-WTP-UIF-CSA-10-0001, Rev. 4, User Information Form for GTSTRUDL, Version 30 (V&V Document).	These conditions are fully addressed in the Structural Design Criteria and the Secondary Containment Design requirements documents. The design requirements and codes and standards specified are adequate to satisfy the performance goals. The procurement and construction specifications adequately provide for proper foundation construction and installation of the Secondary Containment. The general arrangement plans and the associated design drawings show the secondary containment boundaries. The design calculations reviewed show that the foundation slabs are appropriately designed and will not fail when subjected loads such as uplift, installation, settlement or residual effects.

	Information	Source of Information	Assessment
Foundation Integrity (cont'd)	The placement, structural support, and type of material used for backfill around and below the Secondary Containment are appropriate.	Drawings listed above under References; 24590-BOF-3PS-CE01-T0001, Rev. 7, Engineering Specification for Excavation and Backfill; 24590-BOF-3PS-C000-T0001, Rev. 6, Engineering Specification for Material Testing Services; 24590-WTP-RPT-CSA-16-001, Rev. 0, Geotechnical Evaluation of EMF Facilities Excavation and Backfill Operations and Design Recommendations; 24590-BOF-DBC-25-00001, Rev. A, LAW Effluent Process Concrete Basemat and Wall Design; 24590-BOF-DBC-25-00002, Rev. A, LAW Effluent Drain Tank Building Design;	The Excavation and Backfill and Material Testing specifications contain current adequate industry standards for selecting and testing fill materials, placing and compacting backfills, and testing not less than once each lift to assure adequate compaction. Drawings and daily field document reports show that excavation and structural backfill requirements are properly applied, tested, documented, and accepted and approved by BNI to comply with the requirements listed in the Geotechnical Evaluation document. Review of the design calculations shows that appropriate parameters for structural backfill and soil are used in design.

	Information	Source of Information	Assessment
Infiltration	The design or operation (e.g., diking & curbing) prevents run-on or infiltration of precipitation into the Secondary Containment system unless the collection system has sufficient excess capacity (25-year, 24-hour rainfall event) to contain the run-on precipitation.	Drawings listed above under References; 24590-WTP-DB-ENG-01-001, Rev. 3, Basis of Design. CCN 179563, Report of Supplementary Geotechnical Engineering Study, RPP-WTP, Hanford Site, Richland, WA, April 2001; 24590-BOF-PER-M-16-003, Rev. 0, Dangerous Waste Permit (DWP) Liner Heights in the Effluent Management Facility (EMF); 24590-BOF-M0C-DEP-00001, Rev. B, Liner Height Calculations in the EMF.	This requirement is specified in the Basis of Design document. The secondary containment rooms listed in the Scope section above are shown on the general arrangement plan drawings of the EMF facility. Room ED-B001 is located at floor Elevation (-) 39'-0" of the Drain Tank Building and Rooms E-0102, E-0103 are located inside the EMF Process Building on floor Elevation 0'-0." Since these rooms are inside the buildings which protect them from the precipitation and surface water percolation. Rooms E-0105 and E-0106 are outside the covered portion of the EMF Process Building, which are subjected to rainfall accumulation. The Liner Heights document accounts for the rainfall in these rooms. The CCN 179563 document describes that the ground water table at the WTP site is about 275 ft. below the ground surface, which makes it unlikely event for water infiltration or intrusion into the EMF buildings.

	Information	Source of Information	Assessment
Infiltration (cont'd)	The design includes an external moisture barrier or other means to prevent moisture from entering the cell.	Drawings listed above under References; 24590-WTP-RPT-CSA-16-001, Rev. 0, Geotechnical Evaluation of EMF Facilities Excavation and Backfill Operations and Design Recommendations; 24590-WTP-3PS-NLLR-T0002, Rev. 1, Engineering Specification for Furnishing, Detailing, Fabrication, Delivery and Installation of Stainless Steel Liner Plates; 24590-WTP-3PS-AFPS-T0006, Rev. 3, Engineering Specification for Field Applied Special Protective Coatings for Secondary Containment Areas; 24590-WTP-PER-CSA-02-001, Rev. 11, Secondary Containment Design; 24590-WTP-3PS-D000-T0001, Rev. 8, Engineering Specification for Concrete Work; 24590-BOF-PER-M-16-001, Rev. 0, Leak Detection Capability in the EMF Facility; 24590-BOF-PER-M-16-002, Rev. 0, Waste Removal Capability for the Direct Feed LAW Effluent Management Facility (EMF).	The secondary containment rooms listed in the Scope section above are shown on the general arrangement plan drawings at floor Elevations (-) 39'-0" and 0'-0" are located in the EMF facility. Rooms ED-B001, E-0102, E-0103 are inside the buildings which protect them from the precipitation and surface water percolation. Rooms E-0105 and E-0106 are outside of the covered portion of the EMF facility, which are subjected to rainfall precipitation. The Geotechnical Evaluation document states that the ground water table at the WTP site is located about 275 ft. below the ground surface; therefore, infiltration of external moisture into the interior of the EMF buildings is not a credible event. Even though the infiltration of external moisture is not a credible case, all concrete construction joints are provided with chemical-resistant waterstops which will also stop leakage of dangerous waste to outside environment. The details of the specified waterstops are as shown on the Secondary Containment Design document and applicable drawings. For further mitigation of any waste leakage to outside, the subject Secondary Containment rooms as shown on the drawings are lined with stainless steel plates or special protective coating (SPC) material. The sumps in these rooms are equipped with waste leak detection and timely removal capability instrumentation and equipment. It is noteworthy to note that the deep Drain Tank Building walls are poured against the left-in-place shotcreted soldier pile system, which is an added assurance against moisture infiltration from the outside. The EMF Process Building perimeter walls rest on the top of a 5 ft. thick concrete slab at Elev. 0'-0" which is 6" above the grade elevation around the building. Therefore, moisture infiltration is not a credible case.

	Information	Source of Information	Assessment
Liner System	The containment area is free of cracks or gaps and the design discusses methods of their minimization.	Drawings listed above under References; 24590-WTP-PER-CSA-02-001, Rev. 11, Secondary Containment Design; 24590-WTP-3PS-NLLR-T0002, Rev. 1, Engineering Specification for Furnishing, Detailing, Fabrication, Delivery and Installation of Stainless Steel Liner Plates; 24590-WTP-3PS-AFPS-T0006, Rev. 3, Engineering Specification for Field Applied Special Protective Coatings for Secondary Containment Areas.	The Secondary Containment Design requirements document provides adequate and appropriate codes and standards for design of leak-tight liners. This report includes appropriate details for design and installation of stainless steel and special protective coating liners and sumps free of cracks and gaps. The Engineering Specification for Furnishing, Detailing, Fabrication, Delivery and Installation of Stainless Steel Liner Plates provides detailed information on design, fabrication, installation, and inspection of stainless steel liners and sumps. The Engineering Specification for Field Applied Special Protective Coatings provides detailed information on the tested and approved coating systems. This information includes directions for surface preparation, patching materials and application methods, and specific directions for application of multi-layer coatings. From the review of the drawings and the documents listed in the Sources of Information column, it is concluded that the liner materials used and applied are adequate.

	Information	Source of Information	Assessment
Liner System (cont'd)	The design has considered the compatibility of the concrete liner or coatings and waste and presents information on coatings planning to be used from the manufacturer addressing compatibility with the stored waste. The lining or coating must prevent the waste from migrating into the concrete.	Drawings listed above under References; 24590-WTP-PER-M-02-001, Rev. 4, Material Selections for Building Secondary Containment/Leak Detection; 24590-WTP-PER-J-02-002, Rev. 4, Leak Detection in Secondary Containment Systems; 24590-WTP-PER-CSA-02-001, Rev. 11, Secondary Containment Design; 24590-WTP-3PS-NLLR-T0002, Rev. 1, Engineering Specification for Furnishing, Detailing, Fabrication, Delivery and Installation of Stainless Steel Liner Plates; 24590-WTP-3PS-AFPS-T0006, Rev. 3, Engineering Specification for Field Applied Special Protective Coatings for Secondary Containment Areas.	The Material Selections document contains adequate and appropriate general information on the compatibility of planned Secondary Containment stainless steel and special protective coating liners with the waste. The Secondary Containment Design document and drawings provide adequate and appropriate standard details for design and installation of stainless steel and special protective coating liners that will prevent migration of the waste into the concrete. The Engineering Specification for Furnishing, Detailing, Fabrication, Delivery and Installation of Stainless Steel Liner Plates provides detailed information on design, fabrication, installation, and inspection of stainless steel liners and sumps. The Engineering Specification for Field Applied Special Protective Coatings (SPC) provides detailed information on the tested and approved coating systems. This information includes directions for surface preparation, patching materials and application methods, and specific directions for application of multi-layer coatings.

Issued by
RPP-WTP PDC

System Logic Description for the Direct Feed LAW Effluent Management Facility Process System (DEP)

Document title: System Logic Description for the Direct Feed LAW Effluent Management Facility Process System (DEP)

Document number: 24590-BOF-PER-J-16-001, Rev 0

Contract number: DE-AC27-01RV14136

Department: Controls and Instrumentation

Author(s): Ryan Ricono

Checked by: P. A. Treese

Issue status: Issued for Permitting Use

Approved by: Dennis Huth

Approver's position: DFLAW C&I Engineering Group Supervisor

Approver's signature: _____ Signature 9-21-16 Date

This bound document contains a total of 22 sheets

River Protection Project
Waste Treatment Plant
2435 Stevens Center Place
Richland, WA 99354
United States of America
Tel: 509 371 2000

Notice

Please note that source, special nuclear, and byproduct materials, as defined in the Atomic Energy Act of 1954 (AEA), are regulated at the US Department of Energy (DOE) facilities exclusively by DOE acting pursuant to its AEA authority. DOE asserts, that pursuant to the AEA, it has sole and exclusive responsibility and authority to regulate source, special nuclear, and byproduct materials at DOE-owned nuclear facilities. Information contained herein on radionuclides is provided for process description purposes only.

History Sheet

Rev	Reason for revision	Revised by
0	Issued for permitting use	R. Ricono

Contents

Notice ii

History Sheet iii

Acronyms v

Glossary vi

1 Introduction 1

2 Applicable Documents 1

3 Description 3

3.1 Below-Grade System Requirements 3

3.1.1 Low Point Drain Vessel DEP-VSL-00001 3

3.1.2 Low Point Drain Sump DEP-SUMP-00001 4

3.1.3 Leak Detection Boxes 6

3.2 Above-Grade System Requirements 7

3.2.1 West Process Area Sumps DEP-SUMP-00002A/B 7

3.2.2 East Process Area Sumps DEP-SUMP-00003A/B 8

3.2.3 Evaporator Concentrate Area Sumps DEP-SUMP-00004A/B 9

3.2.4 Process Condensate Area Sumps DEP-SUMP-00005A/B 10

3.2.5 EMF Process Vessels 10

3.2.6 Evaporator 10

Tables

Table 1 Coaxial piping number and description draining into DEP-SUMP-00001 5

Table 2 Associated Instruments for DEP Low Point Drain Vessel and Sumps 11

Figures

Figure 1 Typical Collection Vessel Level Detection 13

Figure 2 Typical Sump Level Detection 14

Figure 3 Typical Leak Detection Box Level Detection 15

Acronyms

AEA	Atomic Energy Act
DIW	demineralized water
DEP	Direct Feed LAW Effluent Management Facility Process (system)
DOE	US Department of Energy
DWP	Dangerous Waste Permit
EMF	Effluent Management Facility
HS	hand switch
LAH	level alarm high
LAHH	level alarm high-high
LAHHH	level alarm high-high-high
LAL	level alarm low
LALL	level alarm low-low
LAW	low-activity waste (facility)
LE	level element
LI	level indicator
LKY	level rate of change calculation
LOL	lower operating limit
LSH	level switch high
LT	level transmitter
MU	Miscellaneous Unit
P&ID	piping and instrumentation diagram
PCJ	process control system
PT	pretreatment (facility)
RTD	resistance temperature detector
SBS	submerged bed scrubber
UOL	upper operating limit
WTP	Hanford Tank Waste Treatment and Immobilization Plant

Glossary

Acquire	Acquire is a command under batch control that reserves a group of equipment for a particular batch control operation.
Actual Volume	Volume of waste/process fluid in any vessel in gallons.
Ancillary Equipment	Any device including, but not limited to, such devices as piping, fittings, flanges, valves, and pumps, that is used to distribute, meter, or control the flow of dangerous waste.
Available Space	Volume of waste/process fluid that any vessel can accommodate and still be lower than the upper operating limit (UOL), in gallons. Available space can be calculated as follows: *Available Space = UOL - Actual Volume*.
Available Volume	Volume of waste/process fluid that any vessel can transfer to another vessel and still be above the lower operating limit (LOL), in gallons. Available volume can be calculated as follows: *Available Volume = Actual Volume - LOL*.
Batch	Batch is the material that is being produced or that has been produced by a single execution of a batch process.
Batch Control	Batch control refers to control activities and control functions that provide an ordered set of processing activities to complete a batch process.
Batch Process	A batch process is a process that leads to the production of finite quantities of material by subjecting quantities of input materials to an ordered set of processing activities over a finite period of time using one or more pieces of equipment.
Continuous Control	Continuous control refers to automatic control activities in which the controlled quantity is measured continuously and corrections are a continuous function of the deviation.
Control System	Control system refers to electronic processors that perform regulatory and logic control functions necessary for normal plant operation.
Exception Handling	Exception handling refers to those functions that deal with plant or process contingencies and other events that occur outside the normal or desired behavior of batch control.
Foundation Fieldbus	A digital, serial, two-way communication system which was selected to network instrumentation within WTP.
Level Alarm High (LAH)	A vessel high-level setpoint used to stop a transfer-in batch operation to a vessel under normal plant operation.
Level Alarm High-High (LAHH)	Refers to a notification in the control system that is activated when the applicable variable reaches a point that is significantly higher than that expected during normal operation. For the equipment which also utilizes a LAHHH point, LAHH is an intermediate point between LAH and LAHHH where action will be taken to prevent additional fluid injection.
Level Alarm High-High-High (LAHHH)	Refers to a notification in the control system that is activated when the applicable variable reaches a point that is significantly higher than that expected during normal operation. This point signifies the maximum fill level.

Level Alarm Low (LAL)	A vessel low-level setpoint used to stop a transfer-out batch operation from a vessel under normal plant operations.
Level Alarm Low-Low (LALL)	Refers to a notification in the control system that is activated when the applicable variable reaches a point that is significantly lower than that expected during normal operation.
Level Rate of Change (LKY)	Refers to a calculation in the control system that monitors how fast the sump is filling with fluid.
Permissive	Interlock that allows a device to change state or a sequence to start. Once a device has changed state or a sequence has started, permissive has no further effect on the device or sequence.
Release	Release is a command under batch control that opens up a group of equipment for any batch control to acquire.
Trip	Interlock that does not allow a device to change state or a sequence to start. Once a device has changed state or a sequence has started, trips continue to have an effect on the device or sequence.

1 Introduction

This document describes the instrument control logic for low level waste sumps and pumps in the Direct Feed LAW Effluent Management Facility Process (DEP) system within the LAW effluent process and drain tank buildings. This document has been prepared as one of the documents that provide tank, ancillary equipment, and leak detection system instrumentation control logic narrative description (e.g., plant installed software documentation, descriptions of fail-safe conditions, etc.) to meet the requirements of permit condition III.10.E.9.d.vii.

The narrative for the eight vessels and the evaporator listed in Section 3.2 will be included in a future revision of this document. The low point drain vessel information provided in this revision is preliminary and will be updated, as required, in a future revision of this document.

2 Applicable Documents

24590-WTP-M6-50-00001	*P&ID Symbols and Legend Sheet 1 of 8*
24590-WTP-M6-50-00002	*P&ID Symbols and Legend Sheet 2 of 8*
24590-WTP-M6-50-00003	*P&ID Symbols and Legend Sheet 3 of 8*
24590-WTP-M6-50-00004	*P&ID Symbols and Legend Sheet 4 of 8*
24590-WTP-M6-50-00005	*P&ID Symbols and Legend Sheet 5 of 8*
24590-WTP-M6-50-00006	*P&ID Symbols and Legend Sheet 6 of 8*
24590-WTP-M6-50-00007	*P&ID Symbols and Legend Sheet 7 of 8*
24590-WTP-M6-50-00008	*P&ID Symbols and Legend Sheet 8 of 8*
24590-BOF-P1-25-00001	*Balance of Facilities LAW Effluent Process Bldg & LAW Effluent Drain Tank Bldg General Arrangement Plan at Elev 0'-0"*
24590-BOF-M6-DEP-00001001	*P&ID – BOF/EMF Direct Feed LAW EMF Process System Low Point Drain Vessel DEP-VSL-00001*
24590-BOF-M6-DEP-00001002	*P&ID – BOF/EMF Direct Feed LAW EMF Process System Low Point Drain Vessel Pumps DEP-PMP-00001A/B*
24590-BOF-M6-DEP-00002006	*P&ID – BOF/EMF Direct Feed LAW EMF Process System Evaporator Concentrate / Feed Vessels Law Effluent Cooler DEP-HX-00001*
24590-BOF-M6-DEP-00009001	*P&ID – BOF/EMF Direct Feed LAW EMF Process System Process Area Sumps DEP-SUMP-00002A/B*
24590-BOF-M6-DEP-00009002	*P&ID – BOF/EMF Direct Feed LAW EMF Process System Process Vessel Area Sumps DEP-SUMP-00004A/B*
24590-BOF-M6-DEP-00009004	*P&ID – BOF/EMF Direct Feed LAW EMF Process System Process Area Sumps DEP-SUMP-00003A/B*
24590-BOF-M6-DEP-00009005	*P&ID – BOF/EMF Direct Feed LAW EMF Process System Process Vessel Area Sumps DEP-SUMP-00005A/B*

24590-BOF-M6-DEP-00010001	*P&ID – BOF/EMF Direct Feed LAW EMF Process System Underground Transfer Lines*
24590-BOF-M6-DEP-00011001	*P&ID – BOF/EMF Direct Feed LAW EMF Process System Effluent Facility Leak Detection DEP-LDB-00001 thru DEP-LDB-00006*

3 Description

The low point drain vessel, described in Section 3.1, provides temporary storage for transfer line flushes, piping drains, and overflow from each of the Effluent Management Facility (EMF) vessels, described within Section 3.2. In addition, effluent from the Lab C3 collection and transfer vessel, as well as the low activity waste (LAW) plant wash, scrubber condensate, and blowdown can be diverted to the drain vessel. A sump (DEP-SUMP-00001) is provided to collect leaks and vessel overflows to support leak detection in the low point drain vessel.

The EMF Dangerous Waste Permit secondary containment sumps provide a means of capturing and transferring leakage or collection of fluids within process rooms and vessel cell areas. EMF DWP sumps are placed throughout the facility in each area which contains process vessels, miscellaneous units (MUs), or process fluids.

3.1 Below-Grade System Requirements

The DEP low level waste equipment located below elevation 0 ft includes the following:

Vessel

- DEP-VSL-00001 Low point drain vessel

Sump

- DEP-SUMP-00001 Low point drain sump

Leak Detection Boxes

- DEP-LDB-00001 LAW effluent leak detection box
- DEP-LDB-00002 LAW feed leak detection box
- DEP-LDB-00003 LAW feed leak detection box
- DEP-LDB-00004 SBS/plant wash transfer leak detection box
- DEP-LDB-00005 Scrubber blowdown leak detection box
- DEP-LDB-00006 LAB effluent leak detection box

3.1.1 Low Point Drain Vessel DEP-VSL-00001

The final design of the low point drain vessel will be documented in a future revision of this document. Included within this section is the preliminary low point drain vessel functionality.

The low point drain vessel is used to collect and contain liquid from the sources described in Section 3.2 and forward the collected liquid to the evaporator feed vessel prefilter for processing. An agitator is used to continuously mix the contents of the low point drain vessel to avoid settling of entrained solids. Two vertical pumps transfer the contents to the evaporator feed vessel prefilter (DEP-FILT-00003) and then on to the evaporator feed vessel (DEP-VSL-00002). A rotating spray nozzle supplied with demineralized water will wash the low point drain vessel when empty.

The low point drain vessel (DEP-VSL-00001) is located at elevation -39 ft, within the enclosed room ED-B001. This room is designated as a R5/R3/C5 area. The vessel overflows to sump DEP-SUMP-00001 in the same room [Hold 1]. This sump is evacuated by pump DEP-PMP-00031 and transferred to the evaporator feed vessel prefilter and then on to the evaporator feed vessel (DEP-VSL-00002) at elevation 0 ft.

Hold: [1] Low Point Drain Vessel overflow line and Low Point Drain Sump demineralized water line are on hold pending design change for dipped overflow and basis calculation.

The liquid level in the low point drain vessel (DEP-VSL-00001) is monitored by a level element (LE-8109) and a level transmitter (LT-8109). The transmitter communicates with the process control system (commonly referred to as the PCJ) and provides a control room indication and alarm on high, high-high, low, and low-low level. A discrete software signal will override stop the agitator on low level. A discrete software signal will override stop the two 100% vertical pumps (DEP-PMP-00001A/B) on low-low level. Additionally, a discrete software signal will close the inlet valves to the low point drain on high-high level.

In the event of any sump level detection alarm, the source of the spill will be identified and isolated; notifications, spill response, and waste removal will be completed in accordance with Hanford Tank Waste Treatment and Immobilization Plant (WTP) Operating and Spill Response procedures. Table 2 depicts typical instrumentation associated with the low point drain vessel. Figure 1 depicts the typical DEP control logic functions.

3.1.2 Low Point Drain Sump DEP-SUMP-00001

The low point drain sump (DEP-SUMP-00001), located within the same R5/R3/C5 room as the low point drain vessel at elevation -39 ft, is used to capture overflow from the low point drain vessel (DEP-VSL-00001). In addition, the transfer line leak detection box drain will discharge to the sump.

The leak detection boxes (see section 3.1.3) will drain into the low point drain sump through the feed line DEP-ZS-00043-S11C-01. Additionally, Table 1 lists the process transfer lines which utilize coaxial piping, each draining an inner pipe leak to the low point drain sump. The sump is equipped with an air driven pump (DEP-PMP-00031) which will transfer the fluid to the evaporator feed vessel prefilter and then on to the evaporator feed vessel (DEP-VSL-00002).

The liquid level in the sump is monitored by a level element (LE-8112) and a level transmitter (LT-8112). The transmitter communicates with the PCJ and provides a control room indication and alarm on high and high-high-high level.

Sump level instrumentation has four alarm points. The first alarm, high level, assumes that the sump starts out completely dry. It alerts the operator at or before the level in the sump reaches 2.4 gallons based on a leak of 0.1 gallons per hour within 24 hours, as provided in permit condition III.10.E.9.e.ii. Once the alarm is received, the sump liquids are transferred by the operator from the sump to the appropriate downstream vessel.

The second alarm point, high level rate of change function (LKY), will calculate any change in fluid level above the first alarm setpoint. The LKY control function shown in Figure 2 detects a change in sump liquid levels. A normally closed pneumatically actuated open/close valve (YV-8117) is used to maintain the level in the loop seal with demineralized water as required [Hold 1]. The manually controlled YV-8117 valve has a discrete software signal to close the valve on the third alarm point, high-high sump level [Hold 1].

The fourth alarm, high-high-high level, will alert the operator that the sump has reached its maximum volume. The operator will investigate the source of the alarm and will transfer any effluent from the sump. The transfer will be stopped by the operator or if the level in the sump reaches its low-low level functional logic control point.

In the event of any sump level detection alarm, the source of the spill will be identified and isolated; notifications, spill response, and waste removal will be completed in accordance with WTP Operating and Spill Response procedures.

Hold: [1] Low Point Drain Vessel overflow line and Low Point Drain Sump demineralized water line are on hold pending design change for dipped overflow and basis calculation.

Table 1 lists the coaxial lines outer wall which drains to the low point drain sump (DEP-SUMP-00001).

The *Process line description* column provides information for the purpose of the line, the *Process line tag number* column provides the tag number provided for the process line, the *Coaxial line tag number* column provides the tag number provided for the coaxial line within the process stream, and the *Piping line tag number to DEP-SUMP-00001* column provides the piping line tag number associated with the drain line from the associated coaxial line.

Table 1 Coaxial piping number and description draining into DEP-SUMP-00001

P&ID	Process line description	Process line tag number	Coaxial line tag number	Piping line tag number to DEP-SUMP-00001
24590-BOF-M6-DEP-00001001	LAB effluent from RLD-VSL-00164	DEP-WU-00001-S11E-03	DEP-WU-00008-W31A-03	DEP-WU-00009-S11E-01
	Sump pump discharge DEP-PMP-00032A/B, 34A/B, 38	DEP-ZS-00266-S11C-03	DEP-ZS-20231-W31A-03	DEP-ZS-20234-S11C-01
	Sampling line return	DEP-ZS-00275-S11C-02	DEP-ZS-20236-W31A-02	DEP-ZS-20238-S11C-01
	Vessel DEP-VSL-00002, 3A/B/C, 4A/B, 5A/B overflow	DEP-ZS-00283-S11C-10	DEP-ZS-20242-W31A-10	DEP-ZS-20244-S11C-01
	Fume hood drain & evaporator drain	DEP-ZS-20194-N11F-04	DEP-ZS-20245-W11A-04	DEP-ZS-20246-N11F-01
	SBS cond/plant wash	DEP-ZS-00009-S11C-03	DEP-ZS-20249-W31A-03	DEP-ZS-20251-S11C-01
	Off-spec evaporator concentrate drain	DEP-ZS-20229-N11F-011/2	DEP-ZS-20282-W11A-011/2	DEP-ZS-20284-N11F-01
	Scrubber blowdown LVP-TK-00001	DEP-ZY-00001-S11C-03	DEP-ZY-00181-W31A-03	DEP-ZY-00183-S11C-01
	Vessel DEP-VSL-00001 vent header	DVP-GV-00029-S11X-03	DVP-GV-00026-W31A-03	DVP-GV-00028-S11X-01
24590-BOF-M6-DEP-00001002	Condensate flush DEP-PMP-00015A/B/C	DEP-ZS-00218-S11C-02	DEP-ZS-20219-W31A-02	DEP-ZS-20220-S11C-01
	Pump discharge line from DEP-PMP-00031, emptying SUMP-00001	DEP-ZS-00022-S11C-02	DEP-ZS-20222-W31A-02	DEP-ZS-20223-S11C-01
	Pump discharge lines from DEP-PMP-00001A/B, emptying VSL-00001	DEP-ZS-00016-S11C-02	DEP-ZS-20225-W31A-02	DEP-ZS-20226-S11C-01
24590-BOF-M6-DEP-00002006	Conditioned effluent	DEP-ZS-20268-S11C-03	DEP-ZS-20265-W31A-03	DEP-ZS-20266-S11C-01
24590-BOF-M6-DEP-00010001	Effluent concentrate DEP-PMP-00003A/B	DEP-ZS-00314-N11F-03	DEP-ZS-20252-W11A-03	DEP-ZS-20217-N11F-01

3.1.3 Leak Detection Boxes

DEP has six leak detection boxes (LDBs) on the headers of the coaxial piping draining into the low point drain sump (DEP-VSL-00001) through the feed line DEP-ZS-00043-S11C-01.

The six LDBs are designed to detect a leak within the annular space of the coaxial line. The LDB is separated into two parts by a weir equipped with a drain plug in the closed position to create a detectable liquid level. A conductivity level switch is used to detect liquid in the LDB, to activate the control system alarms, and to trip supply pumps and associated isolation valves. An overflow plug is provided on the opposite side of the weir in an open position, which prevents overfilling of the leak detection box until it can be drained. Figure 3 shows the alarm function for the conductivity level switch instrument associated with each of the leak detection boxes, which serves as a typical method of operation for all leak detection boxes in the DEP.

In the event of a leak detection high level detection alarm, the source of the spill will be identified and isolated; notifications, spill response, and waste removal will be completed in accordance with WTP Operating and Spill Response procedures.

3.2 Above-Grade System Requirements

The DEP low level waste equipment located at or above elevation 0 ft includes the following:

Sumps

- DEP-SUMP-00002A West process area sump
- DEP-SUMP-00002B West process area sump
- DEP-SUMP-00003A East process area sump
- DEP-SUMP-00003B East process area sump
- DEP-SUMP-00004A Evaporator concentrate area sump
- DEP-SUMP-00004B Evaporator concentrate area sump
- DEP-SUMP-00005A Process condensate area sump
- DEP-SUMP-00005B Process condensate area sump

EMF Process Vessels

- DEP-VSL-00002 Evaporator feed vessel
- DEP-VSL-00003A Evaporator concentrate vessel
- DEP-VSL-00003B Evaporator concentrate vessel
- DEP-VSL-00003C Evaporator concentrate vessel
- DEP-VSL-00004A Overhead sampling vessel
- DEP-VSL-00004B Overhead sampling vessel
- DEP-VSL-00005A Process condensate lag storage vessel
- DEP-VSL-00005B Process condensate lag storage vessel

Evaporator

- DEP-EVAP-00001 Evaporator

3.2.1 West Process Area Sumps DEP-SUMP-00002A/B

The west process area sumps (DEP-SUMP-00002A/B) are located within room E-0103, designated R4/C5 at elevation 0 ft. The west process area sumps and level detection instruments detect a leak from the evaporator (DEP-EVAP-00001), the evaporator reboiler (DEP-RBLR-00001), the evaporator feed vessel prefilter (DEP-FILT-00003), the LAW effluent cooler heat exchanger (DEP-HX-00001), or ancillary equipment associated with the evaporator and heat exchanger.

The sumps are equipped with pumps which will transfer the fluid to the appropriate vessel. Fluid contained in the west process area sumps are transferred to the overhead sampling vessels (DEP-VSL-00004A/B) or the low point drain vessel (DEP-VSL-00001) by sump pumps (DEP-PMP-00032A/32B).

The liquid level in the sump is monitored by a level element (LE-8626/8629) and a level transmitter (LT-8626/8629). The transmitters communicate with the PCJ and provide a control room indication (LI-8626/8629) and alarm on high and high-high-high level. A high-level alarm will trip upon detection of liquid in the sump. The PCJ system will alert the operator.

Sump level instrumentation has three alarm points. The first alarm, high level, assumes that the sump starts out completely dry. It alerts the operator at or before the level in the sump reaches 2.4 gallons based on a leak of 0.1 gallons per hour within 24 hours, as provided in permit condition III.10.E.9.e.ii. Once the alarm is received, the sump liquids are transferred by the operator from the sump to the appropriate downstream vessel.

The second alarm point, high LKY level rate of change function, will calculate any change in fluid level above the first alarm setpoint. The LKY control function shown in Figure 2 detects a change in sump liquid levels. The third alarm, high-high-high level, will alert the operator that the sump has reached its maximum volume.

The operator will investigate the source of the alarm and will transfer any effluent from the sump. The transfer will end when the level in the sump reaches its low-level functional logic control point, a batch is transferred, or the selected target collection vessel (DEP-VSL-00001) reaches its actual high-level batch control point.

In the event of any sump level detection alarm, the source of the spill will be identified and isolated; notifications, spill response, and waste removal will be completed in accordance with WTP Operating and Spill Response procedures.

3.2.2 East Process Area Sumps DEP-SUMP-00003A/B

The east process area sumps (DEP-SUMP-00003A/B) are located within room E-0102, designated R3/C3 at elevation 0 ft. The east process area sumps and level detection instruments detect a leak from the evaporator condensers (DEP-COND-00001/2/3) or the ancillary equipment associated with the evaporator condensers.

The sumps are equipped with pumps which will transfer the fluid to the appropriate vessel. Fluid contained in the east process area sumps are transferred to the process condensate lag storage vessels (DEP-VSL-00005A/B) by sump pumps (DEP-PMP-00033A/33B).

The levels in the sumps are measured by a level transmitter (LT-8646/8647). The transmitters communicate with the PCJ and provide a control room indication (LI-8646/8647) and alarm on high and high-high-high level. A high-level alarm will trip upon detection of liquid in the sump. The PCJ system will alert the operator.

Sump level instrumentation has three alarm points. The first alarm, high level, assumes that the sump starts out completely dry. It alerts the operator at or before the level in the sump reaches 2.4 gallons based on a leak of 0.1 gallons per hour within 24 hours, as provided in permit condition III.10.E.9.e.ii. Once the alarm is received, the sump liquids are transferred by the operator from the sump to the appropriate downstream vessel.

The second alarm point, high LKY level rate of change function, will calculate any change in fluid level above the first alarm setpoint. The LKY control function shown in Figure 2 detects a change in sump liquid levels. The third alarm, high-high-high level, will alert the operator that the sump has reached its maximum volume.

The operator will investigate the source of the alarm and will transfer any effluent from the sump. The transfer will end when the level in the sump reaches its low-level functional logic control point, a batch is transferred, or the selected target collection vessel (DEP-VSL-00001) reaches its actual high-level batch control point.

In the event of any sump level detection alarm, the source of the spill will be identified and isolated; notifications, spill response, and waste removal will be completed in accordance with WTP Operating and Spill Response procedures.

3.2.3 Evaporator Concentrate Area Sumps DEP-SUMP-00004A/B

The evaporator concentrate area sumps (DEP-SUMP-00004A/B) are located within room E-0105, designated R4/R3/C1 at elevation 0 ft. The evaporator concentrate area sumps and level detection instruments detect an overflow or a leak from the evaporator feed vessel (DEP-VSL-00002), the evaporator concentrate vessels (DEP-VSL-00003A/B/C), and a leak from ancillary equipment located within this stainless steel lined room E-0105.

The sumps are equipped with pumps which will transfer the fluid to the appropriate vessel. Fluid contained in the evaporator concentrate area sumps are transferred to the overhead sampling vessels (DEP-VSL-00004A/B) or the low point drain vessel (DEP-VSL-00001) by sump pumps (DEP-PMP-00034A/34B).

The liquid level in the sump is monitored by a level element (LE-8632/8656) and a level transmitter (LT-8632/8656). The transmitters communicate with the PCJ and provide a control room indication (LI-8626/8629) and alarm on high and high-high-high level. A high-level alarm will trip upon detection of liquid in the sump. The PCJ system will alert the operator.

Sump level instrumentation has three alarm points. The first alarm, high level, assumes that the sump starts out completely dry. It alerts the operator at or before the level in the sump reaches 2.4 gallons based on a leak of 0.1 gallons per hour within 24 hours, as provided in permit condition III.10.E.9.e.ii. Once the alarm is received, the sump liquids are transferred by the operator from the sump to the appropriate downstream vessel.

The second alarm point, high LKY level rate of change function, will calculate any change in fluid level above the first alarm setpoint. The LKY control function shown in Figure 2 detects a change in sump liquid levels. The third alarm, high-high-high level, will alert the operator that the sump has reached its maximum volume.

The operator will investigate the source of the alarm and will transfer any effluent from the sump. The transfer will end when the level in the sump reaches its low-level functional logic control point, a batch is transferred, or the selected target collection vessel (DEP-VSL-00001) reaches its actual high-level batch control point.

In the event of any sump level detection alarm, the source of the spill will be identified and isolated; notifications, spill response, and waste removal will be completed in accordance with WTP Operating and Spill Response procedures.

3.2.4 Process Condensate Area Sumps DEP-SUMP-00005A/B

The process condensate area sumps (DEP-SUMP-00005A/B) are located within room E-0106, designated R2/C1 at elevation 0 ft. The process condensate area sumps and level detection instruments detect an overflow or a leak from the overhead sampling vessels (DEP-VSL-00004A/B) or the process condensate lag storage vessels (DEP-VSL-00005A/B).

The sumps are equipped with pumps which will transfer the fluid to the appropriate vessel. Fluid contained in the process condensate area sumps are transferred to the process condensate lag storage vessels (DEP-VSL-00005A/B) by sump pumps (DEP-PMP-00035A/35B). Prior to emptying the process condensate area sumps, the operator will need to verify that the chosen vessel has not ruptured as a ruptured vessel could be the source of the sump fluid.

The levels in the sumps are monitored by a level transmitter (LT-8638/8641). The transmitters communicate with the PCJ and provide a control room indication (LI-8638/8641) and alarm on high and high-high-high level. A high-level alarm will trip upon detection of liquid in the sump. The PCJ system will alert the operator.

Sump level instrumentation has three alarm points. The first alarm, high level, assumes that the sump starts out completely dry. It alerts the operator at or before the level in the sump reaches 2.4 gallons based on a leak of 0.1 gallons per hour within 24 hours, as provided in permit condition III.10.E.9.e.ii. Once the alarm is received, the sump liquids are transferred by the operator from the sump to the appropriate downstream vessel.

The second alarm point, high LKY level rate of change function, will calculate any change in fluid level above the first alarm setpoint. The LKY control function shown in Figure 2 detects a change in sump liquid levels. The third alarm, high-high-high level, will alert the operator that the sump has reached its maximum volume.

The operator will investigate the source of the alarm and will transfer any effluent from the sump. The transfer will end when the level in the sump reaches its low-level functional logic control point, a batch is transferred, or the selected target collection vessel (DEP-VSL-00001) reaches its actual high-level batch control point.

In the event of any sump level detection alarm, the source of the spill will be identified and isolated; notifications, spill response, and waste removal will be completed in accordance with WTP Operating and Spill Response procedures.

3.2.5 EMF Process Vessels

The narrative for the eight vessels listed in Section 3.2 will be included in a future revision of this document.

3.2.6 Evaporator

The narrative for the evaporator listed in Section 3.2 will be included in a future revision of this document.

Table 2 below lists auxiliary equipment associated with low point drain vessel and aforementioned sumps.

Table 2 Associated Instruments for DEP Low Point Drain Vessel and Sumps

P&ID	Monitoring/Control Parameter	Type of Instrument/Control Device	Instrument/Control Device Tag Number
24590-BOF-M6-DEP-00001002	Level measurement for DEP-VSL-00001	Level Element	DEP-LE-8109
		Level Transmitter	DEP-LT-8109
		Level Indicator	DEP-LI-8109
		Level Alarm (High, High-High, Low, and Low-Low)	DEP-LI-8109A
24590-BOF-M6-DEP-00001002	Level measurement for DEP-SUMP-00001	Level Element	DEP-LE-8112
		Level Transmitter	DEP-LT-8112
		Level Indicator	DEP-LI-8112
		Level Alarm (High and High-High-High)	DEP-LI-8112A
		Level High-High Switch	DEP-LSHH-8112
		Leak Rate	DEP-LKY-8112A
24590-BOF-M6-DEP-00009001	Level measurement for DEP-SUMP-00002A	Level Element	DEP-LE-8626
		Level Transmitter	DEP-LT-8626
		Level Indicator	DEP-LI-8626
		Level Alarm (High and High-High-High)	DEP-LI-8626A
		Leak Rate	DEP-LKY-8626A
24590-BOF-M6-DEP-00009001	Level measurement for DEP-SUMP-00002B	Level Element	DEP-LE-8629
		Level Transmitter	DEP-LT-8629
		Level Indicator	DEP-LI-8629
		Level Alarm (High and High-High-High)	DEP-LI-8629A
		Leak Rate	DEP-LKY-8629A
24590-BOF-M6-DEP-00009002	Level measurement for DEP-SUMP-00004A	Level Element	DEP-LE-8632
		Level Transmitter	DEP-LT-8632
		Level Indicator	DEP-LI-8632
		Level Alarm (High and High-High-High)	DEP-LI-8632A
		Leak Rate	DEP-LKY-8632A
24590-BOF-M6-DEP-00009002	Level measurement for DEP-SUMP-00004B	Level Element	DEP-LE-8656
		Level Transmitter	DEP-LT-8656
		Level Indicator	DEP-LI-8656
		Level Alarm (High and High-High-High)	DEP-LI-8656A
		Leak Rate	DEP-LKY-8656A

P&ID	Monitoring/Control Parameter	Type of Instrument/Control Device	Instrument/Control Device Tag Number
24590-BOF-M6-DEP-00009004	Level measurement for DEP-SUMP-00003A	Level Transmitter	DEP-LT-8646
		Level Indicator	DEP-LI-8646
		Level Alarm (High and High-High-High)	DEP-LI-8646A
		Leak Rate	DEP-LKY-8646A
24590-BOF-M6-DEP-00009004	Level measurement for DEP-SUMP-00003B	Level Transmitter	DEP-LT-8647
		Level Indicator	DEP-LI-8647
		Level Alarm (High and High-High-High)	DEP-LI-8647A
		Leak Rate	DEP-LKY-8647A
24590-BOF-M6-DEP-00009005	Level measurement for DEP-SUMP-00005A	Level Transmitter	DEP-LT-8638
		Level Indicator	DEP-LI-8638
		Level Alarm (High and High-High-High)	DEP-LI-8638A
		Leak Rate	DEP-LKY-8638A
24590-BOF-M6-DEP-00009005	Level measurement for DEP-SUMP-00005B	Level Transmitter	DEP-LT-8641
		Level Indicator	DEP-LI-8641
		Level Alarm (High and High-High-High)	DEP-LI-8641A
		Leak Rate	DEP-LKY-8641A
24590-BOF-M6-DEP-00011001	Level measurement for DEP-LDB-00001	Level High Switch	DEP-LSH-8701
		Level High Alarm	DEP-LAH-8701
24590-BOF-M6-DEP-00011001	Level measurement for DEP-LDB-00002	Level High Switch	DEP-LSH-8702
		Level High Alarm	DEP-LAH-8702
24590-BOF-M6-DEP-00011001	Level measurement for DEP-LDB-00003	Level High Switch	DEP-LSH-8703
		Level High Alarm	DEP-LAH-8703
24590-BOF-M6-DEP-00011001	Level measurement for DEP-LDB-00004	Level High Switch	DEP-LSH-8706
		Level High Alarm	DEP-LAH-8706
24590-BOF-M6-DEP-00011001	Level measurement for DEP-LDB-00005	Level High Switch	DEP-LSH-8705
		Level High Alarm	DEP-LAH-8705
24590-BOF-M6-DEP-00011001	Level measurement for DEP-LDB-00006	Level High Switch	DEP-LSH-8704
		Level High Alarm	DEP-LAH-8704

Figure 1 Typical Collection Vessel Level Detection

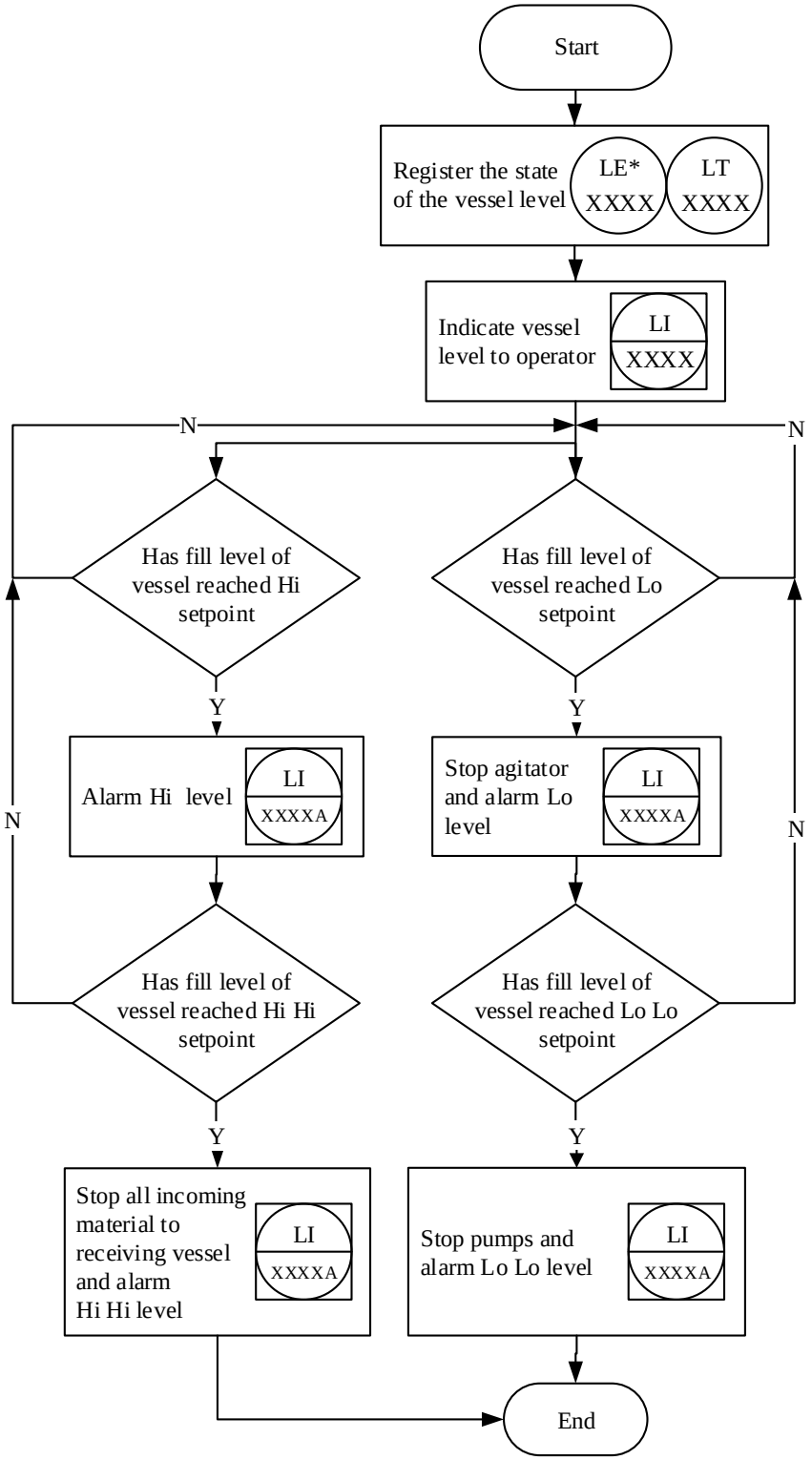

*Level measurement for some vessels will not utilize a Level Element (LE).

Figure 2 Typical Sump Level Detection

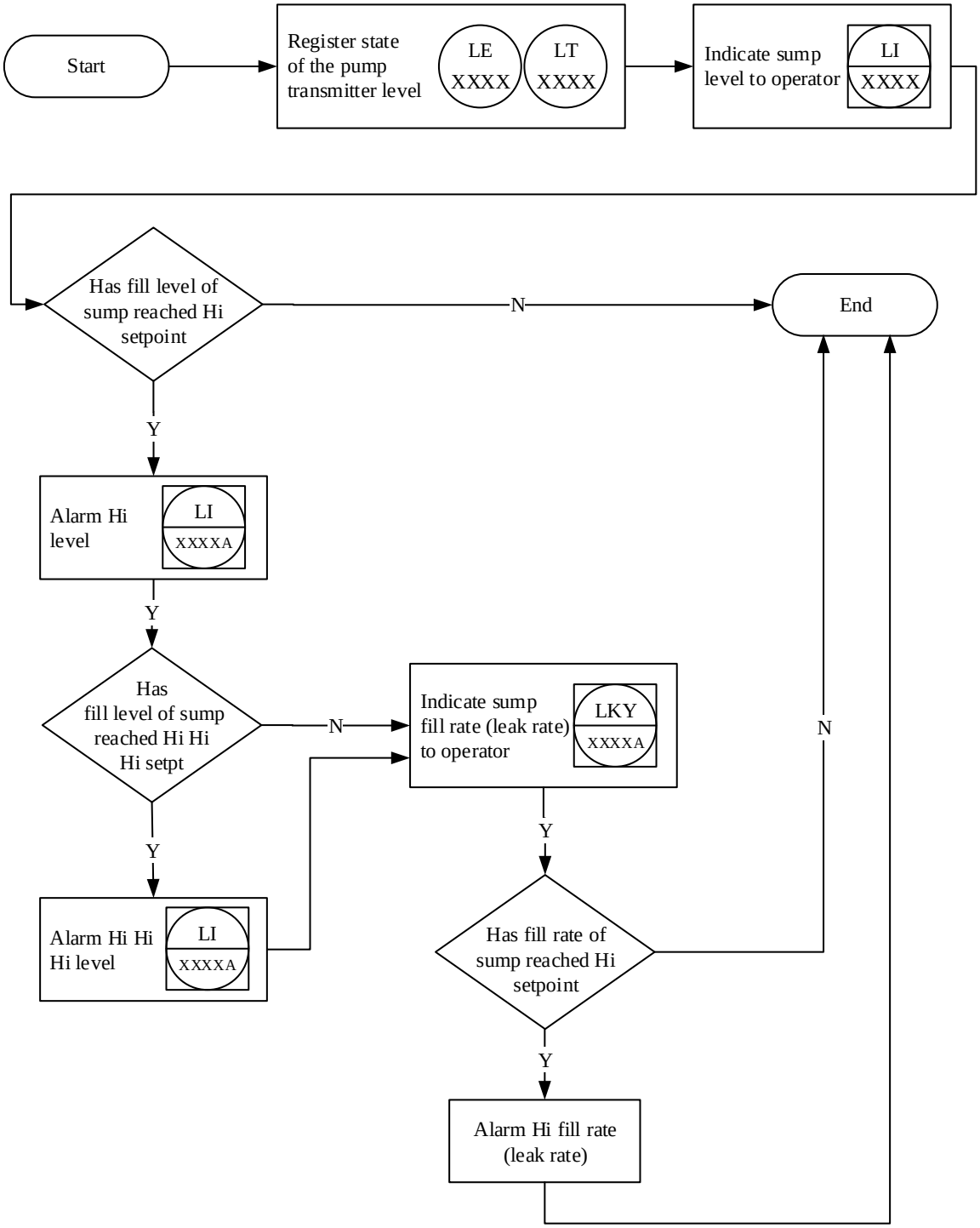

Note: DEP-SUMP-00001 level detection includes additional functional Hi Hi setpoint to close demin water line.

Figure 3 Typical Leak Detection Box Level Detection

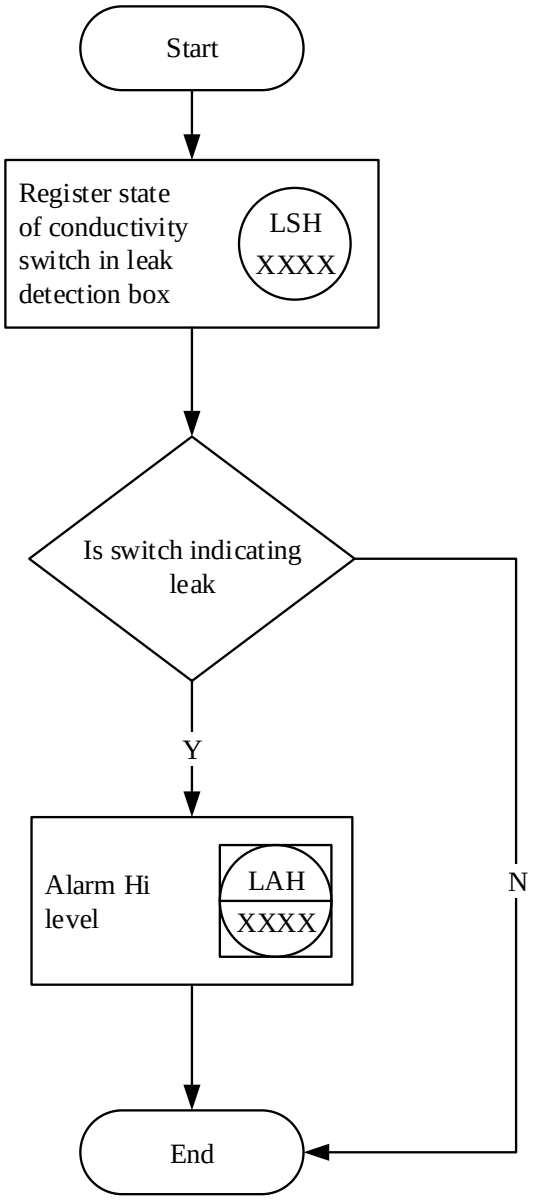

Issued by
RPP-WTP PDC

Leak Detection Capability in the EMF Facility

Document title: Leak Detection Capability in the EMF Facility

Document number: 24590-BOF-PER-M-16-001, Rev 0

Contract number: DE-AC27-01RV14136

Department: Mechanical Systems

Author(s): Kyle Cantrell

Checked by: Sang Ip

Issue status: Issued for Permitting Use

Note: Contents of this document are Dangerous Waste Permit affecting.

Approved by: Y. Mohammad-Zadeh

Approver's position: Engineering Group Supervisor

Approver's signature: for YM — Signature — 10/24/16 — Date

River Protection Project
Waste Treatment Plant
2435 Stevens Center Place
Richland, WA 99354
United States of America
Tel: 509 371 2000

Notice

Please note that source, special nuclear, and byproduct materials, as defined in the Atomic Energy Act of 1954 (AEA), are regulated at the US Department of Energy (DOE) facilities exclusively by DOE acting pursuant to its AEA authority. DOE asserts, that pursuant to the AEA, it has sole and exclusive responsibility and authority to regulate source, special nuclear, and byproduct materials at DOE-owned nuclear facilities. Information contained herein on radionuclides is provided for process description purposes only.

History Sheet

Rev	Reason for revision	Revised by
0	Issued for Permitting Use	K. Cantrell

Contents

Notice ii
History Sheet ii
Acronyms iv
1 Summary 1
2 Objective 1
3 Description 1
4 Inputs/Assumptions 2
5 Analysis 5
6 Detectable Leak Rates 5
7 References 14

Acronyms

AEA	Atomic Energy Act of 1954
BNI	Bechtel National, Incorporated
CCN	Correspondence Control Number
CGS	centimeter gram second units of measurement
DEP	Direct feed low activity waste effluent management facility process system
DOE	US Department of Energy
DWP	Dangerous Waste Permit
EMF	Effluent Management Facility
STD	Standard
WAC	Washington Administrative Code
WTP	River Protection Project-Waste Treatment Plant

1 Summary

The Effluent Management Facility (EMF) secondary containment system must satisfy the leak detection criteria of the Washington Administrative Code (WAC) 173-303-640(4) (Ref. 7.3) and the Waste Treatment Plant (WTP) Dangerous Waste Permit (DWP) 7890008967, Permit Condition III.10.E.9.e.ii for tank and miscellaneous treatment system secondary containment areas, Reference 7.4. This report evaluates the minimum leak rates that can be detected within 24 hours in the regulated secondary containment sumps.

The EMF facility contains nine DWP sumps. Leaks of vessels or piping within the vessels cells or rooms will flow along the floor (or in containment piping), and be collected in a sump provided with leak detection instrumentation. All sumps are considered dry type for the purpose of calculating the leak detection capability.

Since the DWP has established a minimum leak rate of 0.1 gallons per hour (gph), this report determines the time to detect the minimum leak of 0.1 gph in the sumps based on the time to fill the sump plus the time for the 0.1 gph leak to flow to the sump. The time to fill the sump is calculated by first determining the minimum detectable volume in each sump and then the time required to reach this detectable column at a leak rate of 0.1 gph. If the "time to detect" is less than 24 hours for a flow rate of 0.1 gph for all sumps, the permit condition is met.

This Permit Document will document that the time to fill the sump to the detectable level is the critical factor for establishing a leak detection rate vs. the time for the leak (rivulet) to cross the floor or for the leak to wet and travel through the pipe. This approach has been previously presented to the Department of Ecology.

2 Objective

The objective of this report is to document the capability to detect a 0.1 gph leak of dangerous waste within 24 hours in the EMF facility secondary containment area sumps. The leakages include:

- Leakage through double-wall (co-axial) piping
- Leakage on the floor

3 Description

The EMF facility regulated sumps must satisfy the leak detection criteria of the WAC and DWP conditions for secondary containment systems. The regulatory requirements for leak detection are contained in WAC-173-303-640(4), Tank Systems, Section 4, Containment and Detection of Releases (Reference 7.3) and are restated as follows:

> (b) Secondary Containment systems must be:
>
> (ii) Capable of detecting and collecting releases and accumulated liquids until the collected material is removed.
>
> (c) To meet the requirements of (b) of this subsection, secondary containment systems must be at a minimum:
>
> (iii) Provided with a leak detection system that is designed and operated so that it will detect the failure of either the primary or secondary containment structure or the presence of any

> release of dangerous waste or accumulated liquid in the secondary containment system within twenty-four hours, or at the earliest practicable time if the owner or operator can demonstrate to the department that the existing detection technologies or site conditions will not allow detection of a release within twenty-four hours.

In addition, the Waste Treatment Plant Dangerous Waste Permit (Reference. 7.4), Condition: III.10.E.9.e.ii requires submittal of:

Detailed plans and descriptions, demonstrating the leak detection system is operated so that it will detect the failure of either the primary or secondary containment structure or the presence of any release of dangerous and/or mixed waste, or accumulated liquid in the secondary containment system within twenty-four (24) hours. Detection of a leak of at least 0.1 gallons per hour within twenty-four (24) hours is defined as being able to detect a leak within twenty-four (24) hours. Any exceptions to this criteria must be approved by Ecology [WAC 173-303-640(4)(c)(iii), WAC 173-303-806(4)(c)(vii)].

4 Inputs/Assumptions

4.1 The sump locations in the rooms and the maximum total floor distances are summarized in the following Table 4.1. The distances are measured conservatively from the General Arrangement drawings (Reference 7.5 & 7.6) and have been rounded up. The maximum leak travel distance is conservatively computed by summing the distance along the walls from the furthest high point of the floor. Based on the estimate of travel distances for leaks in each cell, the longest leak flow distance on the floors to any sump is 73’, see Table 4.1, for sumps SUMP-00003A/B.

Table 4.1: Sump Locations and Max Floor Distances

Room Number	Sump Name	DEP-Sump-000xx	Sump Location in Cell	Elev.	N-S Distance (rounded up)	E-W Distance (rounded up)	Max Total Distance, ft
ED-B001	Low Point Drain Vessel Area Sump	01	S Wall	-39'-0”	28’-0”	33’-0”	61
E-0103	West Process Area Sump	02A	N Wall	0’-0”	30’-0”	31’-0”	61
E-0103	West Process Area Sump	02B	S Wall	0’-0”	30’-0”	31’-0”	61
E-0102	East Process Area Sump	03A	N Wall	0’-0”	30’-0”	43’-0”	73
E-0102	East Process Area Sump	03B	S Wall	0’-0”	30’-0”	43’-0”	73
E-0105	Feed Vessel Area Sump	04A	N-W corner	0’-0”	44’-0”	20’-0”	64
E-0105	Feed Vessel Area Sump	04B	N-E corner	0’-0”	44’-0”	20’-0”	64
E-0106	Process Condensate Vessel Area Sump	05A	N Wall	0’-0”	25’-0”	43’-0”	68
E-0106	Process Condensate Vessel Area Sump	05B	S Wall	0’-0”	20’-0”	43’-0”	63

4.2 The sumps are 24 inch diameter cylindrical with a flat bottom (Reference 7.1, Section 8.3).

4.3 Secondary containment area floors with stainless steel liners or special protective coating are sloped at a minimum of 1% (1:100) to direct potential leakage to the sumps or sumps in each room (Reference 7.5, Note 2).

4.4 Waste are assumed to the physical properties of water at 100°F (Reference 7.8, p. 30.37), see Assumption 4.6.a. These properties are summarized Table 4.2 below:

Table 4.2: Physical Properties of Water

Constant	English Units	CGS Units
ρ, density	61.99 lbm/ft^3	0.993 gm/cm^3
μ, dynamic viscosity	1.648 lbm/ft hr	0.00681 gm/cm sec
γ, surface tension	0.0048 lbf/ft	69.96 dyn/cm or 69.96 gm/sec^2

4.5 The minimum detectable level within the EMF Secondary Containment System is assumed to be 0.5” above the bottom of each sump based on preliminary vendor information provided by C&I and a project specification for level measurement (Reference 7.11, Section 3.2.1).

4.6 The following items (a through f) were derived from agreements between BNI, DOE, and Department of Ecology (Reference 7.7):

a. The liquid leaking is water at a temperature of 100°F.
b. The leak is at a constant rate over the 24-hour period.
c. No evaporation will occur.
d. The liquid does not foam in the sumps.
e. Hold-up is defined as wetting of the surface.
f. Level detection instruments will be properly installed and calibrated upon installation. Periodic, normal maintenance and calibration will be performed on level instruments during operation of the facility and the instruments will be maintained in an operable condition.

4.7 Double-wall (co-axial) pipes run from room E-0103 to ED-0102 through a tunnel, which are the subject of pipe leakage in this report. The double-wall (co-axial) piping has a minimum slope of 1/100 (1%).

4.8 The wetting factor from experimental data was found to be 0.32 fl. oz/ft (Reference 7.9) for an NPS 6 pipe. The wetting factor will be increased by 50% to 0.48 fl. oz/ft to provide additional margin to the calculated holdup time.

4.9 The rivulet flow in this calculation will be based on the simplified model for a wide flat rivulet. Figure 5 of Ref. 7.10 shows dashed lines which are asymptotic solutions for wide-flat rivulets at high Ω values and for narrow rivulets at low Ω values. For a contact angle of 5°, Figure 5 shows that the wide flat rivulet model, represented by equations 26 and 27 of Ref. 7.10, is applicable when Ω is larger than 0.001 and P is larger than 5. This assumption will be verified by the evaluation of Ω and P using data from this calculation.

4.10 Reference 7.10, Table 2 shows for a rivulet flow rate of 6.2 ml/min (~0.1 gph), the corresponding contact angle, θ, is experimentally measured as 9 to 12 degrees. A conservative rivulet contact angle of 6 degrees is assumed for this calculation. The smaller contact angle results in a longer time to sump for a given flow path length from the following logic: a smaller contact angle yields a larger rivulet width, which yields a larger rivulet cross sectional area, which leads to a lower velocity (since the flow rate is fixed). This assumption is conservative.

4.11 The floor is uniformly sloped and the flow path is in straight lines (no meandering flow).

4.12 Double-wall (co-axial) pipes run from room E-0103 to ED-0102 through a tunnel. This horizontal distance is conservatively measured at 30 ft (Reference 7.5). Any potential leakage will travel in the outer pipe to the end and is routed verticality down through tubing to the Low Point Drain Vessel Area Sump (DEP-SUMP-00001). This vertical drop is conservatively measured and rounded up to 50 ft (Reference. 7.6).

4.13 The average velocity equation assigned to the leakage being conveyed within the sloped pipe is developed from boundary layer theory for flow down an inclined plane. This is simplifying assumption but is reasonable to make because the average velocity is applied to the entire length of the pipe route (e.g., from the double-wall pipe to the sump), even when it contains large vertical drops (where the velocity would increase, thereby reducing the travel time to leak detection equipment). This is a reasonable and simplifying assumption.

4.14 There are no obstructions in the flow path. Leaks from any equipment or piping fall directly to the floor at the point of leakage and do not travel along the outside of pipes or other equipment and

the rivulet does not split into multiple streams as it travels across the floor. While actual leaks may not conform to this scenario, it is beyond the objectives of this calculation to assess every possible leak scenario. The intent is to provide a calculated leak detection volume that is not overly complex but still maintains sufficient accuracy to demonstrate leak detection capability within a reasonable level of uncertainty.

4.15 The double-wall pipelines have pipe classes of W11A and W31A with sizes range from 1 ½" to 10" (Ref. 7.12 – 7.14, 7.2.1). The specifications for the encasement pipe of double-wall (co-axial) pipe class W31A and W11A are summarized in Table 4.3 below. The inside diameters (I.D.) are from Ref. 7.15, p. B-13 through B-16.

Table 4.3: Double-Wall (co-axial) Pipe Specification

Pipe Class	Carrier Size (inch)	Encasement Size (inch)	Material	Sch.	I.D. (inch)
W31A	2	4	CS A106 Gr. B	STD	4.026
W31A	3	6	CS A106 Gr. B	STD	6.065
W31A	10	12	CS A106 Gr. B	STD	12.000
W11A	1 1/2	4	316L SS	40S	4.026
W11A	3	6	316L SS	40S	6.065
W11A	4	6	316L SS	40S	6.065

4.16 The level instrument response time (i.e., the time between the process reaching a specified level set point and the instrument responding to the process condition) is considered negligible with regards to the leak detection time requirement. The level instrumentation is anticipated to have response times on the order of seconds therefore the response time is insignificant based on the 24 hr detection limit.

4.17 All sumps within the EMF Facility are conservatively assumed to be dry. This maximizes the time required to fill the sumps to a detectable level.

5 Analysis

In order to establish if the EMF leak detection system is capable of detecting a permit condition leakage rate of 0.1 gph within a 24-hour time period, the time to sump (t_1), the time to fill (t_2), and the time to wet (t_3) (if applicable) are determined. Because postulated leaks for the low point drain vessel sump convey along a short segment of double-wall (co-axial) pipes as well as the liner floor, two methods are used to determine the elapsed time to detect a leak in the low point drain sump. Leakage flowing inside double-wall (co-axial) pipes makes use of boundary layer theory (Section 6.1) and leakage flowing along the liner floor makes use of rivulet flow (Section 6.2).

6 Detectable Leak Rates

6.1 Leakage through pipes

The elapsed time to detect a leak that is flowing through a pipe is composed of three time components: (i.) liquid holdup time or elapsed time for leak to wet surface, t_3, (Section 6.1.1), (ii.) elapsed time for the leak to arrive at the detection equipment, t_1, (Section 6.1.2), and (iii.) the time to fill the leak detection equipment to a level that can be detected by the associated leak detection instrumentation, t_2, (Section

6.1.3). Therefore, the total time for leakage detection through pipes is $t_{total} = t_1 + t_2 + t_3$. If the total time is less than 24 hours for a flow rate of 0.1 gph for all leak detection equipment, the permit condition is met.

6.1.1 Holdup Time within Double-Wall (Co-Axial) Pipe, t_3

The elapsed time for the leak to wet the flow path (flow channel) from the most-remote location to its corresponding leak detection feature (i.e., a sump) is estimated based on an experimentally determined value of wetting holdup (Ref. 7.9) and results in the following equation for determining the time to account for the holdup of water flowing through a pipe :

$$t_3 = \frac{cL}{Q} \qquad \text{Equation 6.1}$$

Where:
t_3 = holdup time, hr
c = wetting factor, gal/ft or fluid ounces/ft (abbreviated as: fl. oz/ft) with use of conversion factor: 128 fl. oz/gal
L = travel distance, ft
Q = leakage volumetric flow rate, ga1/hr

The maximum distance from any postulated leak to the Low Point Drain Vessel Sump is obtained from Assumption 4.12. The linear length from the beginning of the double-wall pipes to the sump is used, this length conservatively includes any straight-vertical drops (Assumption 4.12), which is:

L = 30 ft + 50 ft = 80 ft

The wetting factor is equal to 0.32 fl. oz/ft for 6 inch pipes, however, a factor of 0.48 fl. oz/ft is used (Assumption 4.8) to add margin to the calculated holdup time. Hence, the time required to wet the flow channel using Equation 6.1 is:

L = 80 ft
Q = 0.1 gph

$$t_3 = \left(\frac{0.48\,fl.oz}{ft}\right)\left(\frac{gal}{128\,fl.oz.}\right)\left(\frac{80\,ft}{1}\right)\left(\frac{hr}{0.1gal}\right) = 3.0hr$$

6.1.2 Leak Travel Time to the Sump via Double-Wall (Co-Axial) Pipe, t_1

The time delay for the leak to reach or activate the detection equipment is calculated using equations derived from boundary layer theory for uniform flow down an inclined plane (Assumption 4.13). The average velocity distribution from boundary layer theory (Ref. 7.16, p. 249 thru 251, Equation 9.4b) is:

$$v = \frac{g \quad S_p \quad d_p^2}{3 \quad n} \qquad \text{Equation 6.2}$$

where:
v = average leak velocity, ft/s
g = gravitation constant, 32.17 ft/s^2
S_p = Slope of the pipe, dimensionless
d_p = flow depth, ft
n = kinematic viscosity, ft^2/s

The general equation for volumetric flow rate is given by:

$$Q = Av \qquad \text{Equation 6.3}$$

where:
Q = volumetric flow rate, ft^3/s
A = cross-sectional flow area, ft^2

Therefore, combining Equation 6.2 and Equation 6.3, the flow depth, d_p, can be found by solving the following relationship:

$$d_p = \sqrt{\frac{3}{g}\frac{n}{S_p}\frac{Q}{A}} \qquad \text{Equation 6.4}$$

The geometry based cross-sectional area for gravity flow in a circular pipe is found from (Ref. 7.17, p. 5)

$$A = \frac{\left(\theta_{fs} - \sin\theta_{fs}\right)D_p^2}{8} \qquad \text{Equation 6.5}$$

where:
D_p = pipe diameter, ft
θ_{fs}= free surface angle (see Figure 1), radians

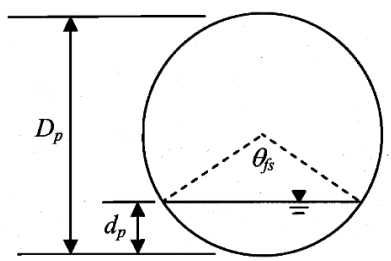

Figure 1. Partially Full Pipe Sketch

The depth of flow can be found by the following equation (Attachment A of Ref. 7.18)

$$d_p = D_p \sin^2\left(\frac{\theta_{fs}}{4}\right) \qquad \text{Equation 6.6}$$

There are four unknowns (θ_{fs}, A, v, and d_p) to the set of four equations represented by Equation 6.3 through Equation 6.6. Though it is difficult to split theta in these equations in order to use a solve-and-substitute method, iterations are used instead.

The time required for the leakage flow to travel from its point of origin to the sump is calculated from the Equations 6.3 through 6.6. The following constants are used:

D_p = ranges from 4.026 inch (0.3355 ft) to 12.000 inch (1.0 ft) (Table 4.3). The larger diameter of 1.0 ft is used in this calculation, since it yields a lower velocity, which is more conservative.
Q = 0.1 gph = 3.714 E-6 ft^3/s
g = 32.17 ft/s^2
S_p = Slope of the pipe = 1/100 = 0.01 (Assumption 4.7)

μ = 1.648 lbm/ft.hr (Table 4.2)
ρ = 61.99 lbm/ft^3 (Table 4.2)

Since kinematic viscosity (n) is equal to dynamic viscosity (μ) / density (ρ), kinematic viscosity is calculated as:

n = (1.648 lbm/ft.hr) / (61.99 lbm/ft^3) x (1 hr / 3600 sec) = 7.39E-6 ft^2/sec

A Mathcad equation solve block is used to determine the unknowns. The results are:

d_p = 1.674E-3 ft
A = 9.13E-5 ft^2
θ_{fs} = 0.164 Radians
v = 0.041 ft/s

The time delay for the leak to reach the sump is simply:

$$t_1 = L / v \times (hr / 3600 \sec) \qquad \text{Equation 6.7}$$

where:
t_1 = time to reach detection equipment, hr
v = average velocity of leak, ft/sec
L = travel distance, ft

Equation 6.7 applies to rivulet flow as well.

Substituting the values in Equation 6.7, we have:

t_1 = (L/v) x (hr/3600s) = (80 ft / 0.041 ft/s) / 3600s = 0.6 hr

6.1.3 Time to Obtain a Detectable Sump Volume, t_2

The sumps are all round with flat bottoms (Assumption 4.2) and the detectable volume is calculated with:

$$\forall = \frac{\pi}{4} D_s^2 \times h \times \frac{gal}{231\ in^3} \qquad \text{Equation 6.8}$$

where:
D_s = sump diameter, in
h = detectable liquid height, in
$\forall$ = volume to detection, gal

Based on Assumption 4.2, the sumps have a 24" diameter. The sump detectable volume is determined from Equation 6.8 with the following values:

h = 0.5 in (Assumption 4.5)
D_s = 24 in (Assumption 4.2)

$\forall = \pi/4$ x (24 in)^2 x 0.5 in / 231 gal/in^3 = 0.98 gal

The time to fill the leak detection equipment, t_2, is calculated from the following equation:

$t_2 = \forall / Q$ Equation 6.9

where:
t_2 = time to fill the leak detection equipment, hr
$\forall$ = volume to detection, gallons
Q = leak rate, 0.1 gph

Substituting $\forall = 0.98$ gal and Q = 0.1 gph in Equation 6.9 we have:

t_2 = 0.98 gal/ 0.1 gal/hr= 9.8 hr

6.1.4 Total Detection Time, t_{total}

The total detection time is the sum of the previously enumerated pipe wetting, transport, and sump filling delays, which can be expressed in equation form as:

$t_{total} = t_1 + t_2 + t_3$

t_{total} = 0.6 hr + 9.8 hr + 3.0 hr = 13.4 hr

The resultant value is less than 24 hours for a minimum leak rate of 0.1 gph, thus satisfying the permit requirement for leakage detection.

6.2 Leakage Along Floor-Rivulet Flow

The time to detect a leak traveling across a floor liner is composed of two time components: t_1 and t_2. The first time component, t_1, is the time for the leak to reach the leak detection equipment (Equation 6.7). The secondary time component, t_2, is the time to fill the leak detection equipment based on the minimum leak rate.

For each leak detection equipment, " t_2 " is calculated by dividing the minimum detectable volume by the volumetric flow rate of the leak. The time component " t_1 " is calculated using the methodology from Reference 7.10 (rivulet flow). The elapsed time to detect a leak, t_{total} is the sum of these two time components: $t_{total} = t_1 + t_2$. If the total time is less than 24 hours for a flow rate of 0.1 gph for all leak detection equipment, the permit condition is met.

Calculation of " t_1" for each leak detection equipment is not necessary; using the longest path length bounds the "time to detection." As indicated in Assumption 4.1, the rivulet leak travel distance is computed by summing the distance along the walls: adding the north-south wall distance to the east-west wall distance.

6.2.1 Leakage Travel Time to Room Sumps, t_1

There is no need to calculate the flow rate of the leak across the floor since the permit has established a minimum leak rate of 0.1 gph. The approach illustrated here has been presented to and concurred by the Department of Ecology.

The "time to detection" is determined using the average leak velocity at the minimum leak rate of 0.1 gph. The methodology shown in Reference 7.10 for rivulet flow forms the basis for the rivulet leak velocity calculation. The method requires the calculation of the angle of inclination for the rivulet, the capillary constant, and the rivulet cross sectional area. In order to be consistent with the units in Ref. 7.10, most units within this section are presented in grams (gm) and centimeters (cm).

The angle of inclination, α, which is the slope of the floor with respect to a vertical plane, as shown in Figure 2, is determined using trigonometry as shown with the following equation:

$$\alpha = 90^{\circ} - \tan^{-1}(S_o) \qquad \text{Equation 6.10}$$

where:
α = angle of inclination, degrees
S_o = slope of floor, dimensionless

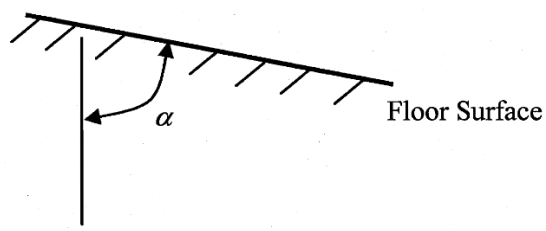

Figure 2. Inclination Angle for Rivulet Flow

From Assumption 4.3, S_o = 1/100 = 0.01. Substituting the values in the above Equation 6.10, we have:

α = 90° - $\tan^{-1}$(0.01) = 90° - 0.5729° = 89.427°

The capillary constant, the basis for the dimensionless width, is defined below (Ref. 7.10, p. 973, equation following equation 9):

$$a = \sqrt{\gamma / \rho g \sin\alpha} \qquad \text{Equation 6.11}$$

where:
a = capillary constant, cm
γ = liquid surface tension, dyne/cm (= gm/sec^2)
ρ = liquid density, gm/cm^3
g = gravitational acceleration = 980.7 cm/sec^2

The liquid properties are based on water at 100 °F (Assumption 4.4 & 4.6), which are listed in Table 4.2 and are as follows:

γ = 69.96 g/sec^2 (Assumption 4.4)
ρ = 0.993 g/cm^3 (Assumption 4.4)
α = 89.427°

Substituting these in Equation 6.11 above, we have:

$$a = \sqrt{\frac{69.96 \;\; g/\sec^2}{0.993 \;\; g/cm^3 \times 980.7 \;\; cm/s^2 \times \sin(89.427°)}}$$

a = 0.268 cm

For the wide flat rivulet, its depth is determined based on (Ref. 7.10, 2nd equation following equation 25):

$$Y_0 = 2\sin\left(\theta/2\right) \qquad \text{Equation 6.12}$$

where:
Y_0 = dimensionless depth and is defined in Reference 7.10, definitions following equation 17 (2nd line following equation 17), as:

$$Y_0 = \eta_0 / a$$

where:
η_0 = rivulet depth, cm
θ = contact angle, degrees

Solving for η_0 yields:

$$\eta_0 = 2a\sin(\theta/2) \qquad \text{Equation 6.13}$$

From Assumption 4.10 we have θ = 6°. Substituting this in Equation 6.13 results in:

η_0 = 2 x 0.268 cm x sin (6°/2)
η_0 = 0.02805 cm

The rivulet width, l, is determined from Ref. 7.10, equation 27:

$$\frac{\mu Q \tan\alpha}{l\gamma}\sqrt{\frac{\rho g \sin\alpha}{\gamma}} = \frac{8}{3}\sin^3(\theta/2)$$

Rearrange above equation to solve for l:

$$l = \frac{3\mu Q \tan\alpha}{8\gamma \sin^3(\theta/2)}\sqrt{\frac{\rho g \sin\alpha}{\gamma}} \qquad \text{Equation 6.14}$$

where:
l = rivulet width, cm
μ = dynamic liquid viscosity, gm/cm.sec
Q = volume flow, cm^3/sec

We can now calculate the width of the rivulet using Equation 6.14 below:

α = 89.427°
γ = 69.96 gm/sec^2 (Assumption 4.4)
μ = 0.00681 gm/cm.sec (Assumption 4.4)
ρ = 0.993 gm/cm^3 (Assumption 4.4)
g = 980.7 cm/sec^2
θ = 6° (Assumption 4.10)
Q = 0.1 gph = 0.1052 cm^3/sec

$$l = \frac{3 \times 0.00681 gm/cm.\sec \times 0.1052 cm^3/\sec \times \tan(89.427°)}{8 \times 69.96 gm/\sec^2 \times \sin^3(6°/2)} \sqrt{\frac{0.993 gm/cm^3 \times 980.7 cm/\sec^2 \times \sin(89.427°)}{69.96 gm/\sec^2}}$$

l = 9.99 cm

The rivulet cross-sectional area is determined using the approximation that the wide flat rivulet has a rectangular cross-section (rectangular cross-section for the wide flat rivulet is noted in Ref. 7.10, p. 975), thus the area is defined as:

$$A = l \cdot \eta_0 \qquad \text{Equation 6.15}$$

where:
A = rivulet area, cm^2

Substituting values in Equation 6.15 we have:

A = 9.99 cm x 0.02805 cm = 0.2802 cm^2

With the volumetric flow rate known, the rivulet velocity, v, can be calculated from rearranging Equation 6.3

$$v = Q / A \qquad \text{Equation 6.16}$$

Substituting values in Equation 6.16 we have:

v = 0.1052 cm^3/s / 0.2802 cm^2= 0.3754 cm/sec

The method used in this calculation is from Reference 7.10 and is based on a dimensionless flow rate, Ω, and dimensionless stream width, P, along with other parameters. The following equations for the dimensionless parameters, P and Ω, are used to calculate these values from Ref. 7.10, p. 974, equation following equation 17 and the 3rd equation following equation 17, respectively.

$$P = l / a \qquad \text{Equation 6.17}$$

where:
P = dimensionless width
l = rivulet width, cm
a = capillary constant, cm

The dimensionless rivulet width (P) is calculated using Equation 6.17 as follows:

P = 9.99 cm / 0.268 cm = 37.3

The Equation for Ω is defined in Ref. 7.10 as:

$$\Omega = \frac{\mu \rho g Q}{\gamma^2} \cdot \tan\alpha \cdot \sin\alpha \qquad \text{Equation 6.18}$$

where:
Ω = dimensionless flow rate

Q = volumetric flow rate, cm^3/sec
γ = liquid surface tension, dyne/cm (= gm/sec^2)
ρ = liquid density, gm/cm^3
g = gravitational acceleration = 980.7 cm/sec^2
α = angle of inclination (slope), degrees

The dimensionless flow rate (Ω) is calculated using Equation 6.18:

α = 89.427°
γ = 69.96 gm/sec^2 (Assumption 4.4)
μ = 0.00681 gm/cm.sec (Assumption 4.4)
ρ = 0.993 gm/cm^3 (Assumption 4.4)
g = 980.7 cm/sec^2
Q = 0.1 gph = 0.1052 cm^3/sec

$$\Omega = \frac{0.00681\ \ gm/cm.\sec \times 0.993\ \ gm/cm^3 \times 980.7\ \ cm/\sec^2 \times 0.1052\ \ cm^3/\sec}{69.96^2\ \ gm/\sec^2} \cdot \tan(89.427°) \cdot \sin(89.427°)$$

Ω = 0.014

From Reference 7.10 (p. 977, Figure 5), the point at the coordinates of Ω = 0.014 and P = 37.3 falls right on the asymptotic solutions for a wide rivulet close to θ = 5 degrees. This confirms the assumption for a wide rivulet flow (Assumption 4.9).

The time to flow to sump, t_1, is calculated for the sump with the longest rivulet travel distance, which is 73' (Assumption 4.1). Equation 6.7 is used to calculate the time to flow to sump, t_1:

$$t_1 = L/v \times (hr/3600\sec)$$

L = 73' = 2225 cm
v = 0.1052 cm^3/s / 0.2802 cm^2 = 0.3754 cm/sec

t_1 = (2225 cm / 0.3754 cm/s) x (1/3600)
t_1 = 1.65 hr

6.2.2 Time to Obtain a Detectable Sump Volume, t_2

The time to obtain a detectable vessel sump volume is calculated in Section 6.1.3 and is:

t_2 = 9.8 hr

6.2.3 Total Detection Time, t_{total}

The total detection time is the sum of the previously enumerated elapsed times t_1 and t_2:

$t_{total} = t_1 + t_2$ = 1.65 hr + 9.8 hr = 11.45 hr

6.3 Results

Table 6.1 below summarizes the result for the EMF's capability to detect a leakage. This analysis demonstrates that the EMF sumps are capable of detecting a permit condition leakage rate of 0.1 gal/hr within a 24-hour period, thus the permit condition for EMF is satisfied.

Table 6.1: EMF Time to Leak Detection Capability

Type of Leak	Time to Sump t_1 (hr)	Time to Fill t_2 (hr)	Time to Wet t_3 (hr)	Total Time to Detect t_{total} (hr)
Leakage thru double-wall (co-axial) piping	0.6	9.8	3.0	13.4
Leakage on the floor	1.65	9.8	*	11.45

*For leakage on the floor, Time to Wet (t_3) is included in the Time to Sump (t_1)

Table 6.1 above shows that using the bounding distance of 73 ft (maximum total floor distance to sump DEP-SUMP-00003A/B from Table 4.1) resulted in a bounding total detection time of 11.45 hours. Therefore, the total detection time for all other DWP sumps, which have a distance less than 73 ft, are less than 11.45 hours.

7 References

7.1 24590-BOF-M6C-DEP-00001, Rev. A, DEP Sump, Sump Pump and Pipeline sizing

7.2 P&IDs:

7.2.1 24590-BOF-M6-DEP-00001002, Rev. 0, Low Point Drain Vessel Pumps DEP-PMP-00001A/B

7.2.2 24590-BOF-M6-DEP-00009001, Rev. 0, Process Area Sumps, DEP-SUMP-00002A/B

7.2.3 24590-BOF-M6-DEP-00009004, Rev. 0, Process Area Sumps, DEP-SUMP-00003A/B

7.2.4 24590-BOF-M6-DEP-00009002, Rev. 0, Process Vessel Area Sumps, DEP-SUMP-00004A/B

7.2.5 24590-BOF-M6-DEP-00009005, Rev. 0, Process Vessel Area Sumps, DEP-SUMP-00005A/B

7.3 WAC 173-303-640. Tank Systems, Section 4, Containment and Detection of Releases in Dangerous Waste Regulations, Washington State Administrative Code.

7.4 WA 7890008967. Dangerous Waste Permit (DWP). Dangerous Waste Portion of the Resource Conservation and Recovery Act Permit for the Treatment, Storage, and Disposal of Dangerous Waste at the Hanford Waste Treatment and Immobilization Plant, Rev. 05/10, p 49.

7.5 Drawing 24590-BOF-P1-25 -00001, Rev. 0, Balance of Facilities LAW Effluent Process BLDG & LAW Effluent Drain Tank BLDG General Arrangement Plan at Elev. 0'-0"

7.6 Drawing 24590-BOF-P1-25-00002, Rev. 0, Balance of Facilities LAW Effluent Process BLDG & LAW Effluent Drain Tank BLDG General Arrangement Sections A, B, & C

7.7 CCN 097799, Leak Detection Capability Scoping Statement, Revision 6, 08/19/2004

7.8 2009 ASHRAE Handbook Fundamentals

7.9 CCN 093156, E-mail Message from Danielle Mathews to Roosevelt Molina, dated August 20,2004, Subject: Flour Daniel Northwest Calculation No. W314-P-039, Encasement Leak Detection, October 19, 1998

7.10 Towell, G. D, and Rothfeld, L. B. 1966, Hydrodynamics of Rivulet Flow, AIChE, Journal, Vol. 12, No. 5, p. 972-980

7.11 24590-WTP-3PS-JL10-T0002, Rev. 0, Engineering Specification For Radar Level Measurement

7.12 24590-BOF-M6-DEP-00001001, Rev. 0, P&ID - BOF/EMF Direct Feed LAW - EMF Process System – Low Point Drain Vessel - DEP-VSL-00001

7.13 24590-BOF-M6-DEP-00002006, Rev. 0, P&ID - BOF/EMF Direct Feel LAW EMF – Process System Evaporator Concentrate / Feed Vessels - LAW Effluent Cooler DEP-HX-00001

7.14 24590-BOF-M6-DEP-00010001, Rev. 0, P&ID - BOF/EMF Direct Feed LAW EMF Process System Underground Transfer Lines

7.15 Crane Co. 2011. Flow of Fluids through Valves, Fittings, and Pipe, Technical Paper No. 410, Stamford, CT

7.16 Roberson, John A. and Clayton T. Crowe, Engineering Fluid Mechanics, Houghton Mifflin Co., Boston, MA, 1975

7.17 24590-WTP-GPG-M-033, Rev. 4, Fire Water Drain System

7.18 24590-WTP-M6C-M11 T-00004, Rev. 1, Supporting Calculation for Fire Water Floor Drain System Design Guide

Issued by
RPP-WTP PDC

Waste Removal Capability for the Direct Feed LAW Effluent Management Facility (EMF)

Document title: Waste Removal Capability for the Direct Feed LAW Effluent Management Facility (EMF)

Document number: 24590-BOF-PER-M-16-002, Rev 0

Contract number: DE-AC27-01RV14136

Department: Mechanical Systems

Author(s): Elaine Tsai Elaine Tsai

Checked by: Bryant Leung Bryant Leung

Issue status: Issued for Permitting Use

Approved by: Youssef Mohammad-Zadeh

Approver's position: Engineering Group Supervisor

Approver's signature: Abbas Soltani MJ for YM — Signature

10/24/16 — Date

Contents of this document are Dangerous Waste Permit Affecting.

River Protection Project
Waste Treatment Plant
2435 Stevens Center Place
Richland, WA 99354
United States of America
Tel: 509 371 2000

This bound document contains a total of 18 sheets

Notice

Please note that source, special nuclear, and byproduct materials, as defined in the Atomic Energy Act of 1954 (AEA), are regulated at the US Department of Energy (DOE) facilities exclusively by DOE acting pursuant to its AEA authority. DOE asserts, that pursuant to the AEA, it has sole and exclusive responsibility and authority to regulate source, special nuclear, and byproduct materials at DOE-owned nuclear facilities. Information contained herein on radionuclides is provided for process description purposes only.

History Sheet

Rev	Reason for revision	Revised by
0	Issued for Permitting Use.	E. Tsai

Contents

Notice iii

History Sheet iii

Acronyms v

1 Summary 1

2 Objective 4

3 Description 4

4 Assumptions 5

5 Analysis 6

6 Calculations 9

7 Waste and Accumulated Liquid Removal Rates 12

8 References 13

Acronyms

AEA	Atomic Energy Act of 1954
DOE	Department of Energy
DFLAW	Direct Feed Low Activity Waste
EMF	Effluent Management Facility
WAC	Washington Administrative Code

1 Summary

The Effluent Management Facility (EMF) must satisfy the waste removal criteria of Washington Administrative Code (WAC) 173-303-640(4) (Ref. 8.1) and of Dangerous Waste Permit Number WA7890008967 (Ref. 8.2) Permit Condition III.10.E.9.e.iii for EMF tank and miscellaneous unit system secondary containment systems. This report evaluates the capability for removing, within 24 hours, bounding volumes of leaked waste from the secondary containment areas. For outdoor vessel areas, the bounding volume includes rainfall from a twenty-five-year, twenty-four-hour rainfall event. For indoor areas, the bounding volume includes 20 minutes of sprinkler fire water that may accumulate within the regulated secondary containment areas of EMF.

The secondary containment areas with sump(s) are located at the (-) 39 feet and 0 feet elevations of EMF. The secondary containment areas are lined with a stainless steel liner or a special protective coating. The liners are sloped to direct liquids to dry sump(s) in the area. All sumps contain level detection instrumentation, which indicate increases in fluid levels in the sump. When liquid is initially detected in the sumps, an alarm will alert the operators to take action. The sump(s) within the EMF process building as well as the Drain Tank building are emptied by sump pumps that can transfer accumulated liquids to process vessels for storage and subsequent processing.

Total accumulated liquid volumes from dangerous waste, rainfall, and fire water are calculated for the containment areas listed below, as appropriate:

1. Room ED-B001, Low Point Drain Vessel Area, (-) 39 ft. elevation. The Low Point Drain Vessel Area contains the Low Point Drain Vessel (DEP-VSL-00001). The total accumulated volume (21,456 gallons) in this area includes the total vessel volume (18,000 gallons) and the volume (3,456 gallons) of accumulated fire water.

2. Room E-0105, Evaporator Feed Vessel Area, 0 ft. elevation. The Evaporator Feed Vessel Area contains the Evaporator Feed Vessel (DEP-VSL-00002) as well as three Evaporator Concentrate Vessels (DEP-VSL-00003A/B/C). The total accumulated volume (44,028 gallons) in this area includes the total vessel volume (42,300 gallons) of the single largest vessel in the area, the Evaporator Feed Vessel, and the volume (1,728 gallons) of accumulated rainfall.

3. Room E-0106, Process Condensate Lag Storage Vessel Area, 0 ft. elevation. The Process Condensate Lag Storage Area contains two Overhead Sampling Vessels (DEP-VSL-00004A/B) and two Process Condensate Lag Storage Vessels (DEP-VSL-00005A/B). The total accumulated volume (130,993 gallons) in this area includes the total vessel volume (127,260 gallons) of the single largest vessel in the area, one of the Process Condensate Lag Storage Vessels (DEP-VSL-00005A/B), and the volume (3,733 gallons) of accumulated rainfall.

4. Room E-0103, West Evaporator Process Area, 0 ft. elevation. The West Evaporator Process Area contains the Evaporator Feed Vessel discharge pumps (DEP-PMP-00002A/B and DEP-PMP-00012A/B/C), the Evaporator Concentrate Vessel discharge pumps (DEP-PMP-00003A/B), the Evaporator Separator Vessel (DEP-EVAP-00001), the Evaporator Reboiler (DEP-RBLR-00001), and the Evaporator Concentrate/Feed LAW Effluent Cooler (DEP-HX-00001). The total accumulated volume (55,401 gallons) in this area includes the total vessel volume (42,300 gallons) of the single largest vessel connected to the pumps in the area, the Evaporator Feed Vessel (DEP-VSL-00002), and the volume (13,101 gallons) of accumulated fire water.

5. Room E-0102, East Evaporator Process Area, 0 ft. elevation. The East Evaporator Process Area contains the Overhead Sampling Vessel discharge pumps (DEP-PMP-00004A/B/C), the Process Condensate Lag Storage Vessel discharge pumps (DEP-PMP-00005A/B and DEP-PMP-00015A/B/C), three Evaporator Condensers (DEP-COND-00001/2/3), the Reboiler Condensate Collection Vessel (DEP-VSL-00008), and the Steam Condensate Water Blowdown Vessel (SCW-VSL-00054). The total accumulated volume (149,173 gallons) in this area includes the total vessel volume (127,260 gallons) of the single largest vessel connected to the pumps in the area, one of the Process Condensate Lag Storage Vessels (DEP-VSL-00005A/B), and the volume (21,913 gallons) of accumulated fire water.

6. Rooms E-0102 and E-0103, East and West Evaporator Process Areas Combined, 0 ft. elevation. Doors between the areas cannot be credited for isolating spills; therefore, liquid from one room has the potential to spill into the adjacent room. The East and West Evaporator Process Areas contain the Overhead Sampling Vessel discharge pumps (DEP-PMP-00004A/B/C), the Process Condensate Lag Storage Vessel discharge pumps (DEP-PMP-00005A/B and DEP-PMP-00015A/B/C), three Evaporator Condensers (DEP-COND-00001/2/3), the Reboiler Condensate Collection Vessel (DEP-VSL-00008), the Steam Condensate Water Blowdown Vessel (SCW-VSL-00054), Evaporator Feed Vessel discharge pumps (DEP-PMP-00002A/B and DEP-PMP-00012A/B/C), the Evaporator Concentrate Vessel discharge pumps (DEP-PMP-00003A/B), the Evaporator Separator Vessel (DEP-EVAP-00001), the Evaporator Reboiler (DEP-RBLR-00001), and the Evaporator Concentrate/Feed LAW Effluent Cooler (DEP-HX-00001). The total accumulated volume (162,274 gallons) in this area includes the total vessel volume (127,260 gallons) of the single largest vessel connected to the pumps in the area, one of the Process Condensate Lag Storage Vessels (DEP-VSL-00005A/B), and the volume (35,014 gallons) of accumulated fire water.

The capability to remove the total accumulated volume for each of the containment areas is summarized below:

1. Room ED-B001 – Liquid removal is achieved by operation of one sump pump at a flow rate of 45 gal/min. Approximate time to remove the accumulated liquid volume is 8.0 hours.

2. Room E-0105 – Liquid removal is achieved by operation of one sump pump at a flow rate of 120 gal/min. Approximate time to remove the accumulated liquid volume is 6.2 hours.

3. Room E-0106 – Liquid removal is achieved by operation of one sump pump at a flow rate of 120 gal/min. Approximate time to remove the accumulated liquid volume is 18.2 hours.

4. Room E-0103 – Liquid removal is achieved by operation of one sump pump at a flow rate of 120 gal/min. Approximate time to remove the accumulated liquid volume is 7.7 hours.

5. Room E-0102 – Liquid removal is achieved by operation of one sump pump at a flow rate of 120 gal/min. Approximate time to remove the accumulated liquid volume is 20.7 hours.

6. Rooms E-0102 & E-0103 Combined – Liquid removal is achieved by operation of one sump pump in each room at a total flow rate of 240 gal/min (120 gal/min per pump). Approximate time to remove the accumulated liquid volume is 11.2 hours.

These values are within the 24-hour period required by WAC 173-303-640(4) (Ref. 8.1) and stipulated by Permit Condition III.10.E.9.e.iii (Ref. 8.2). These values are based on consideration of 100% of the total volume of the single largest vessel in each containment area, anticipated fire water, and rainfall, as applicable, that is postulated to accumulate in each area.

The process for ensuring the sumps are dry are described for each area below:

1. Room ED-B001 – The Low Point Drain Vessel Area is an indoor moderate radiation area. Since there will be no rain in the building, sampling of the accumulated liquid is not required. After the maximum volume of accumulated liquid has been transferred by the sump pump, manual entry is required to rinse and flush the room. The rinse/flush water is then transferred by the sump pump. A small amount of residual rinse/flush liquid will remain due to pumping capability and backflow from piping. The residual rinse/flush liquid will be removed through means determined appropriate by operations.

2. Room E-0105 – The Evaporator Feed Vessel Area is an outdoor high radiation classification area. Due to the possibility of frequent rain accumulation, sampling is required to determine whether sump accumulation is rain water or a process leak. To minimize operator entry once a sump high level alarm is tripped, dedicated sampling pumps within this area will pump samples of liquid to a sampling container within the fume hood located in the East Evaporator Process Area (E-0102) to determine the contents of the sump and the destination of the sump pump transfers. If the liquid is a process leak, manual entry is required to rinse and flush the room after the maximum volume of accumulated liquid has been transferred by one of the sump pumps. The rinse/flush water is then transferred by the sump pump. Residual rinse/flush liquid will remain due to pumping capability and backflow from piping. The residual rinse/flush liquid will be removed through means determined appropriate by operations, which may include the usage of the sampling pumps. If the liquid is rainwater, after the maximum volume of accumulated liquid has been transferred, manual entry may be required to remove the residual liquid unless it is left to evaporate.

3. Room E-0106 – The Process Condensate Lag Storage Area is an outdoor low radiation classification area. Although there is possibility of frequent rain accumulation, the accumulation will be transferred to a non-leaking Process Condensate Lag Storage Vessel (DEP-VSL-00005A/B) regardless of whether the liquid is rain water or a process leak, therefore, sampling is not required. After the maximum volume of accumulated liquid has been transferred by one of the sump pumps, manual entry is required to rinse and flush the room if the accumulated liquid is a process leak. Residual rinse/flush liquid will remain due to pumping capability and backflow from piping. The residual rinse/flush liquid will be removed through means determined appropriate by operations. If the liquid is rainwater, after the maximum volume of accumulated liquid has been transferred, manual entry may be required to remove the residual liquid unless it is left to evaporate.

4. Room E-0103 – The West Evaporator Process Area is an indoor moderately high radiation area. Since there will be no rain in the building, sampling is not required. After the maximum volume of accumulated liquid has been transferred by one of the sump pumps, manual entry is required to rinse and flush the room. The rinse and flush water is then transferred out by one of the sump pumps. Residual rinse/flush liquid will remain due to pumping capability and backflow from piping. The residual rinse/flush liquid will be removed through means determined appropriate by operations.

5. Room E-0102 – The East Evaporator Process Area is an indoor moderate radiation area. Since there will be no rain in the building, sampling is not required. After the maximum volume of accumulated liquid has been transferred by one of the sump pumps, manual entry is required to rinse and flush the room. The rinse and flush water is then transferred out by one of the sump pumps. Residual rinse/flush liquid will remain due to pumping capability and backflow from piping. The residual rinse/flush liquid will be removed through means determined appropriate by operations.

6. Rooms E-0102 & E-0103 Combined – The East and West Evaporator Process Area is an indoor moderately high radiation area. Since there will be no rain in the building, sampling is not required. After the maximum volume of accumulated liquid has been transferred by one sump pump in each room, manual entry is required to rinse and flush the rooms. The rinse and flush water is then transferred out by one sump pump in each room. Residual rinse/flush liquid will remain due to pumping capability and backflow from piping. The residual rinse/flush liquid will be removed through means determined appropriate by operations.

2 Objective

The objective of this report is to estimate and document the capability of removing spills, leaked waste, and accumulated liquids in the secondary containment systems of EMF within twenty-four hours as required by Washington Administrative Code (WAC) 173-303-640(4) (Ref. 8.1) and Dangerous Waste Permit WA7890008967 Condition III.10.E.9.e.iii (Ref. 8.2).

3 Description

The regulatory requirements for the secondary containment areas are contained in WAC 173-303-640(4), (Ref. 8.1). The regulatory requirement states that secondary containment systems must be:

> "Sloped or otherwise designed or operated to drain and remove liquids resulting from leaks, spills, or precipitation. Spilled or leaked waste and accumulated precipitation must be removed from the secondary containment system within twenty-four hours…" [WAC 173-303-640(4)(c)(iv)]

The Waste Treatment Plant Dangerous Waste Permit (Ref. 8.2), Permit Condition III.10.E.9.e.iii requires submittal of:

> "Detailed operational plans and descriptions, demonstrating that spilled or leaked waste and accumulated liquids can be removed from the secondary containment system within twenty-four (24) hours" [WAC 173-303-806(4)(c)(vii)]

The total accumulated volume in each secondary containment area that is required to be removed will be the volume that must be contained by the external liners, which is composed of the following:

1. "… one hundred percent of the capacity of the largest tank within its boundary" [WAC 173-303-640(4)(e)(i)(A)] (Ref. 8.1)

2. "… precipitation from a twenty-five-year, twenty-four-hour rainfall event" [WAC 173-303-640(4)(e)(i)(B)] (Ref. 8.1), as applicable.
3. "… fire-protection water from the fire protection system over the minimum design area for a period of 20 minutes…" [Basis of Design Section 14.10.1.2.1] (Ref. 8.6), as applicable.

4 Assumptions

4.1 Design flow rates, the bounding flow requirement, for sump pumps are used to estimate approximate time to remove accumulated volume. Purchased equipment will have capacities equal to or exceeding the design flow rate. If the purchased equipment has a higher capacity, the time required to remove the accumulated volume will decrease. Therefore, this assumption is conservative.

4.2 Specific operator response times are omitted for the purposes of this calculation. This includes time required:

- To respond after a leak has been detected
- To manually align valves
- To activate sump pumps
- For subsequent operator responses.

It is assumed that there will be sufficient operator response time provided outside of the required sump pump operation time.

4.3 Waste removal is achieved by operation of one sump pump within a containment area at a time.

4.4 Only one area in the facility accumulates liquid at a time. However, the leaking and spilling from accumulated liquids of one area is expected to have the potential of spilling into its adjacent area since doors are not credited to isolate the accumulated liquids.

4.5 The Evaporator Separator (DEP-EVAP-00001), Evaporator Condensers' (DEP-COND-00001/2/3), Evaporator Reboiler (DEP-RBLR-00001), Reboiler Condensate Collection Vessel (DEP-VSL-00008), Steam Condensate Water Blowdown Vessel (SCW-VSL-00054), and Evaporator Concentrate/Feed LAW Effluent Cooler (DEP-HX-00001) volumes are not considered in determination of accumulated liquid volumes because their capacities are smaller than the process vessel volumes considered.

4.6 All inside areas are assumed to have a fire sprinkler system. All outside areas are assumed not to have a fire sprinkler system.

4.7 The containment areas are assumed to be either indoor or outdoor as shown in the following table per the EMF General Arrangement Drawing (Ref. 8.3):

Room	Area	Indoor/Outdoor
ED-B001	Low Point Drain Vessel Area	Indoor

E-0105	Evaporator Feed Vessel Area	Outdoor
E-0106	Process Condensate Lag Storage Vessel Area	Outdoor
E-0103	West Evaporator Process Area	Indoor
E-0102	East Evaporator Process Area	Indoor

5 Analysis

The secondary containment areas located at the (-) 39 feet and 0 feet elevations of EMF are provided with sump(s). The liners are sloped to direct liquids to dry sump(s) in the secondary containment areas. The containment areas and sump(s) are shown on the Balance of Facilities LAW Effluent Process Building and LAW Effluent Drain Tank Building General Arrangement Plan (Ref. 8.3). The total accumulated volume of an indoor area is the total vessel volume of the single largest vessel in the containment area and the volume of accumulated fire water. The total accumulated volume of an outdoor area is the total vessel volume of the single largest vessel in the containment area and the volume of accumulated rainfall. The sump pump design flow rates are taken from the DEP Sump, Sump Pump and Pipeline Sizing mechanical calculation (Ref. 8.4) and the vessel, fire water, and rainfall volumes are calculated in and taken and rounded up to the nearest whole number from the Dangerous Waste Permit (DWP) Liner Heights in the Effluent Management Facility (EMF) report (Ref. 8.5).

5.1 Room ED-B001, Low Point Drain Vessel Area

Room ED-B001, the Low Point Drain Vessel Area, is located below grade in the Drain Tank Building at the (-) 39 ft. elevation. It contains the Low Point Drain Vessel (DEP-VSL-00001), which has a total vessel volume of 18,000 gal.

A stainless steel liner provides secondary containment to accommodate the total volume (18,000 gal) of the Low Point Drain Vessel (DEP-VSL-00001) and 3,456 gallons of fire water for a total accumulated liquid volume of 21,456 gallons.

The floor liner is sloped towards the low-point sump (DEP-SUMP-00001), which is provided with level detection instrumentation and a sump pump (DEP-PMP-00031) to send the process leak to the Evaporator Feed Vessel (DEP-VSL-00002). After the maximum volume that can be pumped by the sump pump has been transferred, the area is manually rinsed and flushed. The rinse/flush water is then transferred. The pump has a design flow rate of 45 gal/min. Residual rinse/flush liquid will remain due to pumping capability and backflow from piping. The residual rinse/flush liquid will be removed through means determined appropriate by operations.

5.2 Room E-0105, Evaporator Feed Vessel Area

Room E-0105, Evaporator Feed Vessel Area, is located in the northwest part of EMF at the 0 ft. elevation. It contains the following four vessels:

- Evaporator Concentrate Vessel DEP-VSL-00003A (Total Volume: 14,805 gal)
- Evaporator Concentrate Vessel DEP-VSL-00003B (Total Volume: 14,805 gal)
- Evaporator Concentrate Vessel DEP-VSL-00003C (Total Volume: 14,805 gal)
- Evaporator Feed Vessel DEP-VSL-00002 (Total Volume: 42,300 gal)

A stainless steel liner provides secondary containment to accommodate the total volume (42,300 gal) of the largest vessel in the area, the Evaporator Feed Vessel (DEP-VSL-00002), and 1,728 gallons of rainfall for a total accumulated volume of 44,028 gallons.

The floor liner is sloped towards the low-point sumps (DEP-SUMP-00004A and DEP-SUMP-00004B), which are provided with level detection instrumentation and sump pumps (DEP-PMP-00034A and DEP-PMP-00034B). The sump pumps send rainwater to one of the Overhead Sampling Vessels (DEP-VSL-00004A or DEP-VSL-00004B), small process leaks to the Low Point Drain Vessel (DEP-VSL-00001), and large process leaks to one of the Overhead Sampling Vessels (DEP-VSL-00004A or DEP-VSL-00004B). The sump pumps have a design flow rate of 120 gal/min. The fluid is determined to be rainwater or a process leak through the use of separate sampling pumps (DEP-PMP-00042A/B) which pump samples of the accumulated liquid to a sampling container in the fume hood (DEP-HOOD-00001) located in the East Evaporator Process Area (Room E-0102). The size of a process leak is determined by sump level detection. When the sump is overflowing, vessel level indications for the Evaporator Feed Vessel (DEP-VSL-00002) and the Evaporator Concentrate Vessels (DEP-VSL-00003A/B/C) are monitored. If a measurable drop in vessel level is indicated, the leak size can be estimated. After the maximum volume that can be pumped by the sump pumps has been transferred to their appropriate destinations, the area is manually rinsed and flushed, as needed. The rinse/flush water is then transferred. Residual rinse/flush liquid will remain due to pumping capability and backflow from piping. The residual rinse/flush liquid will be removed through means determined appropriate by operations, which may include the usage of the sampling pumps. If the liquid is rainwater, after the maximum volume of accumulated liquid has been transferred, manual entry may be required to remove the residual liquid unless being left to evaporate.

5.3 Room E-0106, Process Condensate Lag Storage Vessel Area

Room E-0106, Process Condensate Lag Storage Vessel Area, is located in the north part of EMF at the 0 ft. elevation. It contains the following four vessels:

- Overhead Sampling Vessel DEP-VSL-00004A (Total Volume: 40,800 gal)
- Overhead Sampling Vessel DEP-VSL-00004B (Total Volume: 40,800 gal)
- Process Condensate Lag Storage Vessel DEP-VSL-00005A (Total Volume: 127,260 gal)
- Process Condensate Lag Storage Vessel DEP-VSL-00005B (Total Volume: 127,260 gal)

A special protective coating liner with water stops provides secondary containment to accommodate the total volume (127,260 gal) of the largest vessel in the area, the Process Condensate Lag Storage Vessel (DEP-VSL-00005A/B), and 3,733 gallons of rainfall for a total accumulated volume of 130,993 gallons.

The floor liner is sloped towards the low-point sumps (DEP-SUMP-00005A and DEP-SUMP-00005B), which are provided with level detection instrumentation and sump pumps (DEP-PMP-00035A and DEP-PMP-00035B) to send the process leak to a non-leaking Process Condensate Lag Storage Vessels (DEP-VSL-00005A or DEP-VSL-00005B). The pumps have a design flow rate of 120 gal/min. The non-leaking vessel is determined by monitoring the vessel level indications in both Process Condensate Lag Storage Vessels and/or by following operational procedures to visually inspect the area. After the maximum volume that can be pumped by the sump pumps has been transferred, the area is manually rinsed and flushed, as needed. The rinse/flush water is then transferred. The residual rinse/flush liquid will be removed through means determined appropriate by operations. If the liquid is rainwater, after the

maximum volume of accumulated liquid has been transferred, manual entry may be required to remove the residual liquid unless being left to evaporate.

5.4 Room E-0103, West Evaporator Process Area

Room E-0103, West Evaporator Process Area, is located in the southwest part of EMF at 0 ft. elevation. It contains the Evaporator Separator (DEP-EVAP-00001), the Evaporator Reboiler (DEP-RBLR-00001), the Evaporator Concentrate/Feed LAW Effluent Cooler (DEP-HX-00001), the Evaporator Feed Vessel discharge pumps (DEP-PMP-00002A/B and DEP-PMP-00012A/B/C), and the Evaporator Concentrate Vessels' discharge pumps (DEP-PMP-00003A/B/C).

A special protective coating liner with water stops provides secondary containment to accommodate the total volume (42,300 gal) of the largest vessel connected to the pumps in the area, the Evaporator Feed Vessel (DEP-VSL-00002), and 13,101 gallons of fire water for a total accumulated volume of 55,401 gallons.

The floor liner is sloped towards the low-point sumps (DEP-SUMP-00002A and DEP-SUMP-00002B), which are provided with level detection instrumentation and sump pumps (DEP-PMP-00032A and DEP-PMP-00032B) to send small process leaks to the Low Point Drain Vessel (DEP-VSL-00001) and large process leaks to one of the Overhead Sampling Vessels (DEP-VSL-00004A or DEP-VSL-00004B). The pumps have a design flow rate of 120 gal/min. The size of the leak is determined by sump level detection until it overflows from the sump. When the sump is overflowing, vessel level indications for the Evaporator Feed Vessel (DEP-VSL-00002) and the Evaporator Concentrate Vessels (DEP-VSL-00003A/B/C) are monitored. If a measurable drop in vessel level is indicated, the leak size can be determined. If there is no measurable change in vessel level, operational procedures are followed to perform a visual inspection of this area to determine the source and size of leak. After the maximum volume that can be pumped by the sump pumps has been transferred, the area is manually rinsed and flushed. The rinse/flush water is then transferred. Residual rinse/flush liquid will remain due to pumping capability and backflow from piping. The residual rinse/flush liquid will be removed through means determined appropriate by operations.

5.5 Room E-0102, East Evaporator Process Area

Room E-0102, East Evaporator Process Area, is located in the southeast part of EMF at 0 ft. elevation. It contains the Evaporator Condensers (DEP-COND-00001/2/3), the Reboiler Condensate Collection Vessel (DEP-VSL-00008), the Steam Condensate Water Blowdown Vessel (SCW-VSL-00054), the Overhead Sampling Vessels' discharge pumps (DEP-PMP-00004A/B/C), and the Process Condensate Lag Storage Vessels' discharge pumps (DEP-PMP-00005A/B and DEP-PMP-00015A/B/C).

A special protective coating liner with water stops provides secondary containment to accommodate the total volume (127,260 gal) of the largest vessel connected to the pumps in the area, the Process Condensate Lag Storage Vessel (DEP-VSL-00005A/B), and 21,913 gallons of fire water for a total accumulated liquid volume of 149,173 gallons.

The floor liner is sloped towards the low-point sumps (DEP-SUMP-00003A and DEP-SUMP-00003B), which are provided with level detection instrumentation and sump pumps (DEP-PMP-00033A and DEP-PMP-00033B) to send the process leak to a non-leaking Process Condensate Lag Storage Vessels (DEP-VSL-00005A or DEP-VSL-00005B). The pumps have a design flow rate of 120 gal/min. The non-

leaking vessel is determined by monitoring the vessel level indications in both Process Condensate Lag Storage Vessels and/or by following operational procedures to visually inspect the Process Condensate Lag Storage Vessel Area. After the maximum volume that can be pumped by the sump pumps has been transferred, the area is manually rinsed and flushed. The rinse/flush water is then transferred. Residual rinse/flush liquid will remain due to pumping capability and backflow from piping. The residual rinse/flush liquid will be removed through means determined appropriate by operations.

5.6 Rooms E-0102 and E-0103, East and West Evaporator Process Areas Combined

In the event that a pump suction line breaks in Room E-0102 or E-0103, there is the potential for liquid to spill into the adjacent room as doors cannot be credited for isolating spills.

A special protective coating liner with water stops provides secondary containment to accommodate the total volume (127,260 gal) of the largest vessel connected to the pumps in either area, the Process Condensate Lag Storage Vessel (DEP-VSL-00005A/B), and 35,014 gallons of fire water across both process areas for a total accumulated liquid volume of 162,274 gallons.

In this scenario, one sump pump (DEP-PMP-00032A/B in the West Evaporator Process Area and DEP-PMP-00033A/B in the East Evaporator Process Area) is operating in each room to remove the contained liquid. The pumps have a design flow rate of 120 gal/min. The fluid in the West Evaporator Process Area sumps are pumped to one of the Overhead Sampling Vessels (DEP-VSL-00004A or DEP-VSL-00004B) and the fluid in the East Evaporator Process Area sumps are pumped to a non-leaking Process Condensate Lag Storage Vessels (DEP-VSP-00005A or DEP-VSL-00005B). The non-leaking vessel is determined by monitoring the vessel level indications in both of the Process Condensate Lag Storage Vessels and/or by following operational procedures to visually inspect the Process Condensate Lag Storage Vessel Area. After the maximum volume that can be pumped by the sump pumps has been transferred, the area is manually rinsed and flushed. The rinse/flush water is then transferred. Residual rinse/flush liquid will remain due to pumping capability and backflow from piping. The residual rinse/flush liquid will be removed through means determined appropriate by operations.

6 Calculations

Waste removal capability is calculated for the containment areas based on information presented in Section 5 using the following equations:

Flow Rate (gal/hr) = Flow Rate (gal/min) x (60 min/hr) (Equation 1)

Time Required to Remove Liquid (hr) = $\frac{Volume}{Pump\ Flow\ Rate}$ (Equation 2)

6.1 Pump Flow Rate Conversion

Flow Rate (gal/hr) = Flow Rate (gal/min) x (60 min/hr) (Equation 1)

DEP-PMP-00031 flow rate = $45\frac{gal}{min} \times \frac{60\ min}{hr} = 2700\frac{gal}{hr}$

All other pump flow rate = $120\frac{gal}{min} \times \frac{60\ min}{hr} = 7200\frac{gal}{hr}$

6.2 Room ED-B001, Low Point Drain Vessel Area

Liquid Source	Total Volume (Section 5)	DEP-PMP-00031 Flow Rate (Section 6.1)	Time Required to Remove Liquid (Equation 2)
DEP-VSL-00001	18,000 gal	2,700 gal/hr	6.7 hours
Fire Water	3,456 gal	2,700 gal/hr	1.3 hours
Rainfall	Not Applicable		
Accumulated Liquid	**21,456 gal**	**2,700 gal/hr**	**8.0 hours**

The requirement for removing accumulated liquid within twenty-four hours is met considering 8.0 hours is required for the sump pump to remove the total accumulated liquid and operator response time (Assumption 4.2) is not anticipated to require more than the remaining time.

6.3 Room E-0105, Evaporator Feed Vessel Area

Liquid Source	Total Volume (Section 5)	DEP-PMP-00034A/B Flow Rate (Section 6.1)	Time Required to Remove Liquid (Equation 2)
DEP-VSL-00002	42,300 gal	7,200 gal/hr	5.9 hours
Fire Water	Not Applicable		
Rainfall	1,728 gal	7,200 gal/hr	0.3 hours
Accumulated Liquid	**44,028 gal**	**7,200 gal/hr**	**6.2 hours**

The requirement for removing accumulated liquid within twenty-four hours is met considering 17.8 hours is required for the sump pump to remove the total accumulated liquid and operator response time (Assumption 4.2) is not anticipated to require more than the remaining time.

6.4 Room E-0106, Process Condensate Lag Storage Vessel Area

Liquid Source	Total Volume (Section 5)	DEP-PMP-00035A/B Flow Rate (Section 6.1)	Time Required to Remove Liquid (Equation 2)
DEP-VSL-00005A/B	127,260 gal	7,200 gal/hr	17.7 hours
Fire Water	Not Applicable		
Rainfall	3,733 gal	7,200 gal/hr	0.5 hours
Accumulated Liquid	**130,993 gal**	**7,200 gal/hr**	**18.2 hours**

The requirement for removing accumulated liquid within twenty-four hours is met considering 5.8 hours is required for the sump pump to remove the total accumulated liquid and operator response time (Assumption 4.2) is not anticipated to require more than the remaining time.

6.5 Room E-0103, West Evaporator Process Vessel Area

Liquid Source	Total Volume (Section 5)	DEP-PMP-00032A/B Flow Rate (Section 6.1)	Time Required to Remove Liquid (Equation 2)
DEP-VSL-00002	42,300 gal	7,200 gal/hr	5.9 hours
Fire Water	13,101 gal	7,200 gal/hr	1.8 hours
Rainfall	Not Applicable		
Accumulated Liquid	**55,401 gal**	**7,200 gal/hr**	**7.7 hours**

The requirement for removing accumulated liquid within twenty-four hours is met considering only 16.3 hours is required for the sump pump to remove the total accumulated liquid and operator response time (Assumption 4.2) is not anticipated to require more than the remaining time.

6.6 Room E-0102, East Evaporator Process Vessel Area

Liquid Source	Total Volume (Section 5)	DEP-PMP-00033A/B Flow Rate (Section 6.1)	Time Required to Remove Liquid (Equation 2)
DEP-VSL-00005A/B	127,260 gal	7,200 gal/hr	17.7 hours
Fire Water	21,913 gal	7,200 gal/hr	3.0 hours
Rainfall	Not Applicable		
Accumulated Liquid	**149,173 gal**	**7,200 gal/hr**	**20.7 hours**

The requirement for removing accumulated liquid within twenty-four hours is met considering 3.3 hours is required for the sump pump to remove the total accumulated liquid and operator response time (Assumption 4.2) is not anticipated to require more than the remaining time.

6.7 Rooms E-0102 and E-0103, East and West Evaporator Process Areas Combined

Liquid Source	Total Volume (Section 5)	DEP-PMP-00032A/B and DEP-PM-00033A/B Flow Rate Combined (Section 6.1)	Time Required to Remove Liquid (Equation 2)
DEP-VSL-00005A/B	127,260 gal	14,400 gal/hr	8.8 hours
Fire Water	35,014 gal	14,400 gal/hr	2.4 hours
Rainfall	Not Applicable		
Accumulated Liquid	**162,274 gal**	**14,400 gal/hr**	**11.2 hours**

The requirement for removing accumulated liquid within twenty-four hours is not challenged considering only 12.8 hours is required for the sump pump to remove the total accumulated liquid and operator response time is not anticipated to require more than the remaining time (Assumption 4.2).

7 Waste and Accumulated Liquid Removal Rates

Containment Area Elevation (ft)	Containment Area Room Number	Sump(s)	Sump Pump(s)	Sump Pump Flow Rate (gal/min)	Sump Pump Flow Rate (gal/hr)	Largest Vessel in Containment Area (Vessel Number)	Total Vessel Volume (gal)	Time Required to Remove Vessel Volume (hr)	Fire Water Volume (gal)	Time Required to Remove Fire Water (hr)	Rainfall Volume (gal)	Time Required to Remove Rainfall (hr)	Total Accumulated Volume (gal)	Time Required to Remove Total Accumulated Volume (hr)
-39	ED-B001 (Low Point Drain Vessel Area)	DEP-SUMP-00001	DEP-PMP-00031	45	2,700	DEP-VSL-00001	18,000	6.7	3,456	1.3	Not Applicable. Rainfall is not accumulated in indoor areas.		21,456	8.0
0	E-0105 (Evaporator Feed Vessel Area)	DEP-SUMP-00004A/B	DEP-PMP-00034A/B	120	7,200	DEP-VSL-00002	42,300	5.9	Not Applicable. Fire water is not accumulated in outdoor areas.		1,728	0.3	44,028	6.2
0	E-0106 (Process Condensate Lag Storage Vessel Area)	DEP-SUMP-00005A/B	DEP-PMP-00035A/B	120	7,200	DEP-VSL-00005A/B	127,260	17.7			3,733	0.6	130,993	18.2
0	E-0103 (West Evaporator Process Area)	DEP-SUMP-00002A/B	DEP-PMP-00032A/B	120	7,200	DEP-VSL-00002	42,300	5.9	13,101	1.9	Not Applicable. Rainfall is not accumulated in indoor areas.		55,401	7.7
0	E-0102 (East Evaporator Process Area)	DEP-SUMP-00003A/B	DEP-PMP-00033A/B	120	7,200	DEP-VSL-00005A/B	127,260	17.7	21,913	3.1			149,173	20.7
0	E-0102/E-0103 (East and West Evaporator Process Areas)	DEP-SUMP-00002A/B and DEP-SUMP-00003A/B	DEP-PMP-00032A/B and DEP-PMP-00033A/B	120 x 2	14,400	DEP-VSL-00005A/B	127,260	8.9	35,014	2.5			162,274	11.2

8 References

8.1 Washington Administrative Code, December 18, 2014, Title 173 Chapter 303

8.2 WA 7890008967, Waste Treatment & Immobilization Plant Operating Unit Group 10 (OUG-10), Part III

8.3 24590-BOF-P1-25-00001, Rev. 0, Balance of Facilities LAW Effluent Process Bldg & LAW Effluent Drain Tank Bldg General Arrangement Plan at Elev. 0’-0”.

8.4 24590-BOF-M6C-DEP-00001, Rev. A, DEP Sump, Sump Pump and Pipeline Sizing

8.5 24590-BOF-PER-M-16-003, Rev. 0, Dangerous Waste Permit (DWP) Liner Heights in the Effluent Management Facility (EMF)

8.6 24590-WTP-DB-ENG-01-001, Rev. 3, Basis of Design

Issued by
RPP-WTP PDC

Dangerous Waste Permit (DWP) Liner Heights in the Effluent Management Facility (EMF)

Document title: Dangerous Waste Permit (DWP) Liner Heights in the Effluent Management Facility (EMF)

Document number: 24590-BOF-PER-M-16-003, Rev 0

Contract number: DE-AC27-01RV14136

Department: Mechanical Systems

Author(s): Elaine Tsai

Checked by: Bryant Leung

Issue status: Issued for Permitting Use

Approved by: Youssef Mohammad-Zadeh

Approver's position: Engineering Group Supervisor

Approver's signature: _____ Signature 10/24/16 Date

Contents of this document are Dangerous Waste Permit Affecting.

River Protection Project
Waste Treatment Plant
2435 Stevens Center Place
Richland, WA 99354
United States of America
Tel: 509 371 2000

This bound document contains a total of 29 sheets

Notice

Please note that source, special nuclear, and byproduct materials, as defined in the Atomic Energy Act of 1954 (AEA), are regulated at the US Department of Energy (DOE) facilities exclusively by DOE acting pursuant to its AEA authority. DOE asserts, that pursuant to the AEA, it has sole and exclusive responsibility and authority to regulate source, special nuclear, and byproduct materials at DOE-owned nuclear facilities. Information contained herein on radionuclides is provided for process description purposes only.

History Sheet

Rev	Reason for revision	Revised by
0	Issued for Permitting Use.	E. Tsai

Contents

Notice iii

History Sheet iv

Acronyms vi

1 Summary 1

2 Introduction 1

3 Applicable Documents 1

4 Description 2

Appendices

Appendix A Calculation of Accumulated Liquid Volumes and Liner Heights ..... A-i

Acronyms

AEA	Atomic Energy Act of 1954
DOE	Department of Energy
DWP	Dangerous Waste Permit
EMF	Effluent Management Facility
WAC	Washington Administrative Code

1 Summary

The required and design liner heights for each room in the EMF containing dangerous waste are listed below. The liner heights are from the high point of the sloped floor.

Area	Room	Required Height	Design Height
Low Point Drain Vessel Area	ED-B001	4 ft 2 inches	5 ft
Evaporator Feed Vessel Area	E-0105	5 ft 2 inches	7 ft 6 inches
Process Condensate Lag Storage Vessel Area	E-0106	6 ft 10 inches	8 ft 4 inches
West Evaporator Process Area	E-0103	3 ft 5 inches	4 ft 6 inches
East Evaporator Process Area	E-0102	4 ft 6 inches	5 ft 10 inches

The liner heights were calculated by taking the total accumulated liquid volume, including the total volume of a single largest vessel in the room and rainfall or fire water, as applicable, dividing that by the net room area and adding a foot to account for the volume of miscellaneous equipment and components that may be within the containment area. For each area, it was determined whether a leak from another area could spill into the specified area. If a potential for leaking from another area existed, the most bounding scenario was used to determine the liner height.

Design heights were taken from the Architectural Room Finish Schedule (Ref. A-6.5).

2 Introduction

The regulatory codes for the secondary containment areas are contained in the Washington Administrative Code, WAC 173-303-640(4)(e)(i). The regulatory requirement states that external liner systems must be:

> "(A) Designed or operated to contain one hundred percent capacity of the largest tank within its boundary;
> (B) Designed or operated to prevent run-on or infiltration of precipitation into the secondary containment system unless the collection system has sufficient excess capacity to contain run-on or infiltration. Such additional capacity must be sufficient to contain precipitation from a twenty-five year, twenty-four hour rainfall event…" [WAC 173-303-640(4)(e)(i)] (Applicable Documents 3.1)

The calculated liner heights for indoor areas must also be able to contain the volume from 20 minutes of fire suppression water as required by the Basis of Design (Ref. A-6.2) in addition to the volume of the dangerous waste. This report assesses the liner heights required to contain dangerous waste, rainfall, and fire water in the Effluent Management Facility (EMF).

3 Applicable Documents

3.1 Washington Administrative Code, December 18, 2014, Title 173 Chapter 303 Section 640

3.2 NFPA 13, *Standard for Installation of Sprinkler Systems*, 1999

4 Description

There are five areas in the EMF that are considered dangerous waste permit affecting. The five areas are the Low Point Drain Vessel Area, Evaporator Feed Vessel Area, Process Condensate Lag Storage Vessel Area, West Evaporator Process Area, and East Evaporator Process Area. Vessel and pump suction line failures are evaluated for each area to determine the required liner height that will contain the total accumulated liquid volume of dangerous waste and rainfall or fire water, as applicable.

For indoor areas, it is assumed (Assumption A-3.5 and A-3.11) that the area will contain automatic sprinklers and there will be no accumulation from precipitation. Therefore, the liner must be sized to contain:

- The larger of 110% of volume up to the overflow line of the largest vessel (i.e. maximum operating volume), used as a conservative criteria per Basis of Design requirement 11.3.5.1 (Ref. A-6.2), or 100% of the capacity of the largest vessel/tank within the secondary containment boundary per WAC 173-303-640[4][e][i][A] (Applicable Documents 3.1) and
- Accumulation of 20 minutes of fire water from automatic sprinkler discharge in accordance with Basis of Design requirement 14.10.1.2.1 (Ref. A-6.2) with 10% added overage to account for hydraulic overages (Assumption A-3.10)

For outdoor areas, it is assumed (Assumption A-3.5 and A-3.11) that the area will not contain automatic sprinklers and there will be accumulation from precipitation. Therefore, the liner must be sized to contain:

- The larger of 110% of volume up to the overflow of the largest vessel (i.e. maximum operating volume), used as a conservative criteria per Basis of Design requirement 11.3.5.1 (Ref. A-6.2), or 100% of the capacity of the largest vessel/tank within the secondary containment boundary per WAC 173-303-640[4][e][i][A] (Applicable Documents 3.1) and
- Precipitation from a twenty-five-year, twenty-four-hour rainfall event per WAC 173-303-640[4][e][i][B] (Applicable Documents 3.1)

4.1 Low Point Drain Vessel Area (ED-B001)

Room ED-B001, the Low Point Drain Vessel Area, is an area located below grade in the Law Effluent Drain Tank Building at the (-) 39 ft. elevation. It contains one vessel, the Low Point Drain Vessel (DEP-VSL-00001).

In the event of a vessel failure, leakage and spillage could occur. Since the room is indoors, it could also accumulate fire water from the automatic sprinkler system in the event of a fire.

The Low Point Drain Vessel Area is not adjacent to other areas containing pumps and vessels; therefore, spillage and leakage from another areas is not of concern and a scenario assuming discharge of the total volume of liquid contained in the Low Point Drain Vessel (DEP-VSL-00001) and 20 minutes of fire water is evaluated as the most conservative scenario.

The total Low Point Drain Vessel volume of 18,000 gal (2,406 ft^3) is greater than 110% of the maximum operating volume (15,180 gal); therefore, 18,000 gal (2,406 ft^3) is used as the controlling vessel volume in this scenario. 462 ft^3 of fire water (20 minutes of sprinkler discharge with a 10% margin for overage) is added to the total vessel volume to determine the total accumulated liquid volume. The total accumulated liquid volume that must be contained by the liner in the room = 2,406 ft^3 + 462 ft^3 = 2,868 ft^3.

The room slopes to a single sump (DEP-SUMP-00001). To simplify the calculation, the available room volume below the high point of the sloped floor is omitted. This approach is conservative because assuming the floor to be flat and neglecting the sloped area leads to a taller liner height.

The liner height is measured from the high point of the sloped floor. The required liner height above the high point is equal to the total volume of 2,868 ft^3 divided by the net room area (924 ft^2) of the room, which is the cross-sectional area of the room minus the footprints of non-failed vessels within the room, plus 1 ft to account for miscellaneous equipment and components within the area, which is equal to 4.10 ft = 4 ft 2 in (rounded to the next inch).

The design liner height is 5 ft (Ref. A-6.5), therefore the liner is sufficient for the scenario. The detailed calculation for the required liner height is provided in Appendix A.

4.2 Evaporator Feed Vessel Area (Room E-0105)

Room E-0105, Evaporator Feed Vessel Area, is an area located in the northwest side of EMF at the 0 ft. elevation. It contains the following four vessels:

- Evaporator Feed Vessel DEP-VSL-00002
- Evaporator Concentrate Vessel DEP-VSL-00003A
- Evaporator Concentrate Vessel DEP-VSL-00003B
- Evaporator Concentrate Vessel DEP-VSL-00003C

In the event of a vessel failure, leakage and spillage could occur. Since the room is outdoors, it could also accumulate rainfall.

The wall shared between the Evaporator Feed Vessel Area and the Process Condensate Lag Storage Vessel Area does not contain any penetrations; therefore, there is no potential for accumulated liquid in the Process Condensate Lag Storage Vessel Area to leak into the Evaporator Feed Vessel Area. The penetrations into the building are welded; therefore, no accumulated liquid from within the building will have the potential of leaking outdoors. To calculate the required height of the liner in this area, a scenario assuming discharge of the total volume of liquid from the single largest vessel in the room, the Evaporator Feed Vessel (DEP-VSL-00002), and accumulation of rainfall is evaluated as the most conservative scenario.

The total Evaporator Feed Vessel volume of 42,300 gal (5,655 ft^3) is greater than 110% of the maximum operating volume (41,800 gal); therefore, 42,300 gal (5,655 ft^3) is used as the controlling volume. 1.56 inches of rainfall, which equates to 231 ft^3 of rainfall for the cross-sectional area (1,774 ft^2) of the room is added to the vessel volume to determine the total accumulated liquid volume. The total accumulated liquid volume that must be contained by the liner in the room = 5,655 ft^3 + 231 ft^3 = 5,886 ft^3.

The room slopes down to two sumps (DEP-SUMP-00004A/B). To simplify the calculation, the available room volume below the high point of the sloped floor is omitted. This approach is conservative because assuming the floor to be flat and neglecting the sloped area leads to a taller liner height.

The liner height is measured from the high point of the sloped floor. The required liner height above the high point is equal to the total volume of 5,886 ft^3 divided by the net room area (1,430 ft^2) of the room, which is the cross-sectional area of the room minus the footprints of non-failed vessels within the room,

plus 1 ft to account for miscellaneous equipment and components within the area, which is equal to 5.12 ft = 5 ft 2 in (rounded to the next inch).

The design liner height is 7 ft 6 in (Ref. A-6.5), therefore the liner is sufficient for the scenario. The detailed calculation for the required liner height is provided in Appendix A.

4.3 Process Condensate Lag Storage Vessel Area (E-0106)

Room E-0106, Process Condensate Lag Storage Area, is an area located in the north side of EMF at the 0 ft. elevation. It contains the following four vessels:

- Overhead Sampling Vessel DEP-VSL-00004A
- Overhead Sampling Vessel DEP-VSL-00004B
- Process Condensate Lag Storage Vessel DEP-VSL-00005A
- Process Condensate Lag Storage Vessel DEP-VSL-00005B

In the event of a vessel failure, leakage and spillage could occur. Since the room is outdoors, it could also accumulate rainfall.

The wall shared between the Process Condensate Lag Storage Vessel Area and the Evaporator Feed Vessel Area does not contain any penetrations; therefore, there is no potential for accumulated liquid in the Evaporator Feed Vessel Area to leak into the Process Condensate Lag Storage Vessel Area. The penetrations into the building are welded; therefore, no accumulated liquid from within the building will have the potential of leaking outdoors. To calculate the required height of the liner in this area, a scenario assuming discharge of the total volume of liquid from the single largest vessel in the room, one of the Process Condensate Lag Storage Vessels (DEP-VSL-00005A or DEP-VSL-00005B), and accumulation of rainfall is evaluated as the most conservative scenario.

The total Process Condensate Lag Storage Vessel volume of 127,260 gal (17,012 ft^3) is greater than 110% of the maximum operating volume (122,937 gal); therefore, 127,260 gal (17,012 ft^3) is the controlling volume. 1.56 inches of rainfall, which equates to 499 ft^3 of rainfall for the cross-sectional floor area (3,837 ft^2) of the room is added to the vessel volume to determine the total accumulated liquid volume. The total accumulated liquid volume that must be contained by the liner in the room = 17,012 ft^3 + 499 ft^3 = 17,511 ft^3.

The room slopes down to two sumps (DEP-SUMP-00005A/B). To simplify the calculation, the available room volume below the high point of the sloped floor is omitted. This approach is conservative because assuming the floor to be flat and neglecting the sloped area leads to a taller liner height.

The liner height is measured from the high point of the sloped floor. The required liner height above the high point is equal to the total volume of 17,511 ft^3 divided by the net room area (3,031 ft^2) of the room, which is the cross-sectional area of the room minus the footprints of non-failed vessels within the room, plus 1 ft to account for miscellaneous equipment and components within the area, which is equal to 6.77 ft = 6 ft 10 in (rounded to the next inch).

The design liner height is 8 ft 4 in (Ref. A-6.5), therefore the liner is sufficient for the scenario. The detailed calculation for the required liner height is provided in Appendix A.

4.4 West (E-0103) and East (E-0102) Evaporator Process Areas

Room E-0103, West Evaporator Process Area, is an area located in the southwest side of EMF at 0 ft. elevation. The room contains the discharge pumps (DEP-PMP-00002A/B and DEP-PMP-00012A/B/C) from the Evaporator Feed Vessel (DEP-VSL-00002) and discharge pumps (DEP-PMP-00003A/B) from the Evaporator Concentrate Vessels (DEP-VSL-00003A/B/C). The room also contains miscellaneous vessels such as the Evaporator Separator (DEP-EVAP-00001), the Evaporator Reboiler (DEP-RBLR-00001), and the Evaporator Concentrate/Feed LAW Effluent Cooler (DEP-HX-00001).

Room E-0102, East Evaporator Process Area, is an area located in the southeast side of EMF at 0 ft. elevation. The room contains the discharge pumps (DEP-PMP-00004A/B/C) of the Overhead Sampling Vessels (DEP-VSL-00004A/B) and discharge pumps (DEP-PMP-000015A/B/C and DEP-PMP-00005A/B) of the Process Condensate Lag Storage Vessels (DEP-VSL-00005A/B). The room also contains miscellaneous vessels such as the three Evaporator Condensers (DEP-COND-00001/2/3), Reboiler Condensate Collection Vessel (DEP-VSL-00008), and the Steam Condensate Water Blowdown Vessel (SCW-VSL-00054).

In the event that a pump suction line fails, the entire volume of the connected vessel could discharge into the room. Since the rooms are indoor, they could also accumulate fire water from the automatic sprinkler system. The door between the two process areas cannot be credited as a seal; therefore, accumulated liquid in one area can leak into the other. In order to determine the appropriate liner height, two scenarios for each area are considered.

4.4.1 Scenario One for West Evaporator Process Area (E-0103)

The first scenario to be evaluated for the West Evaporator Process Area is the ability to contain the total volume of the single largest vessel connected to the pumps housed in the area and accumulation of fire water. Since the West Evaporator Process Area houses the discharge pumps for the Evaporator Feed and Evaporator Concentrate Vessels, the single largest vessel connected to the pumps in the area is the Evaporator Feed Vessel (DEP-VSL-00002).

Per Section 4.2, the controlling volume for the Evaporator Feed Vessel is 42,300 gal (5,655 ft^3). 1,751 ft^3 of fire water (20 minutes of sprinkler discharge with a 10% margin for overage) is added to the vessel volume to determine the total accumulated liquid volume. The total accumulated liquid volume that must be contained by the liner in the room = 5,655 ft^3 + 1,751 ft^3 = 7,406 ft^3.

The room slopes down to two sumps (DEP-SUMP-00002A/B). To simplify the calculation, the available room volume below the high point of the sloped floor is omitted. This approach is conservative because assuming the floor to be flat and neglecting the sloped area leads to a taller liner height.

The liner height is measured from the high point of the sloped floor. The required liner height above the high point is equal to the total volume of 7,406 ft^3 divided by the net room area (3,393 ft^2) of the room, which is the cross-sectional area of the room minus the footprints of non-failed vessels within the room, plus 1 ft to account for miscellaneous equipment and components within the area, which is equal to 3.18 ft = 3 ft 3 in (rounded to the next inch).

The design liner height is 4 ft 6 in (Ref. A-6.5), therefore the liner is sufficient for the scenario. The detailed calculation for the required liner height is provided in Appendix A.

4.4.2 Scenario One for East Evaporator Process Area (E-0102)

The first scenario to be evaluated for the East Evaporator Process Area is the ability to contain the total volume of the single largest vessel connected to the pumps housed in the area and accumulation of fire water. Since the East Evaporator Process Area houses the discharge pumps for the Overhead Sampling and Process Condensate Lag Storage Vessels, the single largest vessel connected to the pumps in the area is one of the Process Condensate Lag Storage Vessels (DEP-VSL-00005A/B).

Per Section 4.3, the controlling volume for the Process Condensate Lag Storage Vessel is 127,260 gal (17,012 ft^3). 2,929 ft^3 of fire water (20 minutes of sprinkler discharge with a 10% margin for overage) is added to the vessel volume to determine the total accumulated liquid volume. The total accumulated liquid volume that must be contained by the liner in the room = 17,012 ft^3 + 2,929 ft^3 = 19,941 ft^3.

The room slopes down to two sumps (DEP-SUMP-00003A/B). To simplify the calculation, the available room volume below the high point of the sloped floor is omitted. This approach is conservative because assuming the floor to be flat and neglecting the sloped area leads to a taller liner height.

The liner height is measured from the high point of the sloped floor. The required liner height above the high point is equal to the total volume of 19,941 ft^3 divided by the net room area (5,727 ft^2) of the room, which is the cross-sectional area of the room minus the footprints of non-failed vessels within the room, plus 1 ft to account for miscellaneous equipment and components within the area, which is equal to 4.48 ft = 4 ft 6 in (rounded to the next inch).

The design liner height is 5 ft 10 in (Ref. A-6.5), therefore the liner is sufficient for the scenario. The detailed calculation for the required liner height is provided in Appendix A.

4.4.3 Scenario Two for West and East Evaporator Process Areas

The second scenario to be evaluated for both Evaporator Process Areas is to consider the ability to contain the total normalized accumulated liquid in both areas. This scenario considers the pump suction line for the single largest vessel associated with pumps in either process area to fail, therefore, the total accumulated liquid would contain the total vessel volume of a single Process Condensate Lag Storage Vessel (DEP-VSL-00005A/B) and the accumulation of fire water across both areas.

Per Section 4.3, the controlling volume for Process Condensate Lag Storage Vessel is 127,260 gal (17,012 ft^3). 4,681 ft^3 of fire water (20 minutes of sprinkler discharge with a 10% margin for overage) is added to the vessel volume to determine the total accumulated liquid volume. The total accumulated liquid volume that must be contained by the liner in the West and East Evaporator Process Areas = 17,012 ft^3 + 4,681 ft^3 = 21,693 ft^3.

The liner height is measured from the high point of the sloped floor, which is conservative because neglecting the volume under the sloped area leads to a taller liner height. The required liner height above the high point is equal to the total volume of 21,693 ft^3 divided by the net room area (9,120 ft^2) of the room, which is the cross-sectional area of both process areas minus the footprints of non-failed vessels in both areas, plus 1 ft to account for miscellaneous equipment and components within the area, which is equal to 3.38 ft = 3 ft 5 in (rounded to the next inch). The detailed calculation for the required liner height is provided in Appendix A.

Based on evaluation of the two scenarios for both Evaporator Process Areas, the required liner height determined in scenario two (Section 4.4.3) is greater than the required liner height determined in scenario one (Section 4.4.1) for the West Evaporator Process Area, but smaller than the required liner height determined in scenario one (Section 4.4.2) for the East Evaporator Process Area. Therefore, 3 ft 5 inches will be the required liner height for the West Evaporator Process Area and 4 ft 6 inches will be the required liner height for the East Evaporator Process Area. The design liner height for West and East Evaporator Process Areas are 4 ft 6 inches and 5 ft 10 inches (Ref. A-6.5), respectively, therefore, the liner heights are sufficient.

Appendix A
Calculation of Accumulated Liquid Volumes and Liner Heights

Appendix A: Calculation of Accumulated Liquid Volumes and Required Liner Heights

A-1 Purpose

The purpose of this calculation is to size the required liner heights for the dangerous waste containment areas of the Effluent Management Facility at elevation -39 ft and elevation 0 ft. The Low Point Drain Vessel Area is at the -39 ft elevation and the Evaporator Feed Vessel Area, Process Condensate Lag Storage Vessel Area, West Evaporator Process Area, and East Evaporator Process Area are located at the 0 ft elevation as shown on the Effluent Management Facility General Arrangement Drawing (Ref. A-6.1).

A-2 Criteria and Design Inputs

A-2.1 Secondary containment for indoor storage areas shall be designed to contain a spill from the largest vessel plus the design flow volume of fire-protection water calculated to discharge from the fire-extinguishing system over the area of the room for a period of 20 minutes (Ref. A-6.2 Sec. 14.10.1.2.1).

A-2.2 Secondary containment external liners shall be designed to contain one hundred percent of the capacity of the largest tank within its boundary as well as precipitation from a twenty-five year, twenty-four hour rainfall event (Applicable Documents 3.1 WAC 173-303-640[4][e][i][A], WAC 173-303-640[4][e][i][B], and Ref. A-6.2 Sec. 14.10.1.2.1).

A-2.3 The twenty-five-year, twenty-four-hour rainfall event for the Hanford Site is 1.56 inches (Ref. A-6.4 Table 61).

A-2.4 The liners are designed to contain one hundred percent of the largest tank within its boundary, or one hundred ten percent of the volume up to the overflow (i.e., maximum operating volume) of the largest tank within its boundary (Applicable Documents 3.1 WAC 173-303-640[4][e][i][B] and Reference A-6.2 Section 11.3.5.1).

A-3 Assumptions

A-3.1 To evaluate the worst case scenario, the volume of the vessel is assumed to leak completely onto the floor until it reaches equilibrium with the surrounding liquid level.

A-3.2 The calculation for net room area assumes that the area beneath non-failed vessels or tanks do not contain any spilled liquids.

A-3.3 In a fire event, it is assumed that the fire water will remain in the containment area with no credit given to the operation of area sump pump(s).

A-3.4 Room dimensions used in calculating area and volumes are assumed to be the following:

Room	Area	Dimensions (Ref. A-6.3)		
		Length	Width	Area (ft^2)
ED-B001	Low Point Drain Vessel Area	28’	33’	924
E-0105	Evaporator Feed Vessel Area	45’6”	39’	1,774
E-0106	Process Condensate Lag Storage Vessel Area	45’6”	84’4”	3,837
E-0103	West Evaporator Process Area	62’	56’6”	3,503
E-0102	East Evaporator Process Area	62’	94’6”	5,859

A-3.5 All inside areas are assumed to have a fire sprinkler system. All outside areas are assumed not to have a fire sprinkler system.

A-3.6 The following vessels are contained within each listed room as shown on the general arrangement drawing (Ref. A-6.1) and assumed to have the diameters and volumes below (Ref. A-6.3):

Room	Vessel	Elevation	Vessel Diameter	Total Vessel Volume (gal)	Maximum Operating Volume (gal)
ED-B001	Low Point Drain Vessel (DEP-VSL-00001)	- 39 ft	14 ft 1 in	18,000	13,800
E-0105	Evaporator Feed Vessel (DEP-VSL-00002)	0 ft	14 ft 1 in	42,300	38,000
	Evaporator Concentrate Vessels (DEP-VSL-00003A/B/C)	0 ft	12 ft 1 in	14,805	11,703
E-0106	Overhead Sampling Vessels (DEP-VSL-00004A/B)	0 ft	14 ft 1in	40,800	36,600
	Process Condensate Lag Storage Vessels (DEP-VSL-00005A/B)	0 ft	25 ft 1 in	127,260	111,761

A-3.7 Miscellaneous vessels in the West and East Evaporator Process Areas are assumed to have the following dimensions and footprints (Ref. A-6.3):

Room	Equipment	Dimensions	Footprint
E-0103	DEP-EVAP-00001	10’ D x 23’ H	79 ft^2
E-0103	DEP-RBLR-00001	6’ L x 4’ W x 14’ H	24 ft^2
E-0103	DEP-HX-00001	2’6” L x 2’6” W 6’8” H	7 ft^2
E-0102	SCW-VSL-00054	4’ D x 9’ H	13 ft^2
E-0102	DEP-VSL-00008	4’ D x 3’ T-T	13 ft^2

E-0102	DEP-COND-00001	21' L x 4' W x 10' H	84 ft^2
E-0102	DEP-COND-00002	8' L x 2' W x 2' H	16 ft^2
E-0102	DEP-COND-00003	6' L x 1' W x 2' H	6 ft^2

A-3.8 The Evaporator Separator (DEP-EVAP-00001), Evaporator Condensers (DEP-COND-00001/2/3), Evaporator Reboiler (DEP-RBLR-00001), Reboiler Condensate Collection Vessel (DEP-VSL-00008), Steam Condensate Water Blowdown Vessel (SCW-VSL-00054), and the Evaporator Concentrate/Feed LAW Effluent Cooler (DEP-HX-00001) are not considered in determining the single largest vessel in each area because their capacities are expected to be significantly smaller than the process vessel volumes that are considered.

A-3.9 One (1) ft is added to the secondary containment height to account for the volume of miscellaneous equipment and components that may be within the containment area. The volume of miscellaneous equipment and components is not expected to challenge the volume from one foot of height in the containment area.

A-3.10 An automatic sprinkler system design density is assumed to be 0.17 gpm/ft^2 with 10 percent added to account for hydraulic overages (Applicable Documents 3.2 and Ref. A-6.6).

A-3.11 Precipitation will only accumulate in the outdoor areas.

A-4 Methodology

To determine the required liner height for the worst case scenario in each containment area, the vessels are considered to be completely filled and sitting on the floor and the largest vessel is expected to leak completely into the room. In addition, for the Evaporator Process Areas, it is also assumed that the leak has the capability of spilling between areas and normalizing within the combined area because doors/walls in the area cannot be credited as seals. Therefore, each containment area must be evaluated for the leaking of the total volume of the largest vessel in the area or 110% of the maximum operating volume, whichever is larger, as well as leaking from adjacent areas and rainfall or fire water, as applicable.

A-4.1 Conversion

Volume (ft^3) = $Volume\ (gal) \times 0.13368 \frac{ft^3}{gal}$ (Equation 1)

A-4.2 Vessel

A_{vessel} (ft^2) = Vessel Footprint Area = $\frac{\pi d^2}{4}$ (Equation 2)

Where $\pi = 3.14$
d (ft) = Vessel Diameter

A-4.3 Room Dimensions and Equations

A_{room} (ft^2) = Area of a Rectangular Room = L x W (Equation 3)

V_{room} (ft^3) = Volume of a Rectangular Room = L x W x H (Equation 4)

Where L (ft) = Length of room
W (ft) = Width of room
H (ft) = Height of room

$A_{net}(ft^2) = Net\ Room\ Area = A_{room} - \sum A_{vessel}\ (non - failed)$ (Equation 5)

A-4.4 Fire Water Discharge Volume for Automatic Fire Suppression Systems

V_F (ft^3) = Volume of Fire Water = $A_{room} \times \rho_{sprinkler} \times T \times 1.1$ (Equation 6)

Where A_{room} (ft^2) = Area of a Rectangular Room
$\rho_{sprinkler}$ ($gal/min/ft^2$)= Sprinkler Discharge Density (0.17 gal/min/ft^2) (Assumption A-3.10)
T (min) = Sprinkler Discharge Time (20 minutes) (Input A-2.1)
1.1 = 10% Margin for Hydraulic Overages (Assumption A-3.10)

A-4.5 Rainfall Volume

V_R (ft^3) = Volume of Rainfall = $A_{room} \times \left(H_r \times \frac{1\ ft}{12\ in}\right)$ (Equation 7)

Where A_{room} (ft^2) = Area of a Rectangular Room
H_r (in) = Height of Rainfall from a Twenty-Five-Year, Twenty-Four-Hour Rainfall Event
= 1.56 inches (Input A-2.3)

A-4.6 Accumulated Liquid Volume and Required Liner Height

V_T = Total Accumulated Liquid Volume
= V_V + (V_F or V_R), whichever is applicable (Equation 8)

Where V_V = 100% Total Vessel Volume or 110% of the Maximum Operating Volume, whichever is larger
V_F = Volume of Fire Water
V_R = Volume of Rainfall

H_L (ft) = Required Liner Height = $\frac{V_T}{A_{net}}$ +1 ft (Equation 9)

Where V_T (ft^3) = Total Accumulated Liquid Volume
A_{net} (ft^2) = Net Room Area
1 ft = Volume of Miscellaneous Equipment and Components (Assumption A-3.9)

A-5 Calculations

A-5.1 Required Liner Height for Low Point Drain Vessel Area, Room ED-B001, Elevation -39 ft

Scenario: Failure of the Low Point Drain Vessel (DEP-VSL-00001) and accumulation of fire water from automatic fire suppression system discharge (Assumption A-3.5). No rainfall will accumulate (A-3.11)

The total vessel volume is compared to 110% of the maximum operating volume of the vessel to determine the controlling volume:

$$Total\ Vessel\ Volume = 18{,}000\ gal \text{ (Assumption A-3.6)}$$
$$110\%\ Maximum\ Operating\ Volume = 1.10 \times\ 13{,}800\ gal = 15{,}180\ gal \text{ (Assumption A-3.6)}$$
$$18{,}000\ gal > 15{,}180\ gal\ \therefore \text{ Total Vessel Volume is the Controlling Volume}$$

The total accumulated liquid volume for the Low Point Drain Vessel Area is calculated using the following equation:

$$V_T = V_V + V_F (Equation\ 8)$$

Where

$V_V(gal) = Controlling\ Volume =\ 18{,}000\ gal\ (Total\ Vessel\ Volume)$(Assumption A-3.6)

$V_V(ft^3) = 18{,}000\ gal \times 0.13368\ \frac{ft^3}{gal} \cong 2{,}406\ ft^3 (Equation\ 1)$

$V_F = A_{room} \times \rho_{sprinkler} \times T \times 1.1\ (Equation\ 6)$

$A_{room} = 924\ ft^2$ (Assumption A-3.4)

$V_F\ (gal) = 924\ ft^2 \times 0.17\ gal/min/ft^2 \times 20\ min \times 1.1 = 3{,}455.76\ gal$

$V_F(ft^3) = 3{,}455.76\ gal \times 0.13368 \frac{ft^3}{gal} \cong 462\ ft^3 (Equation\ 1)$

Therefore,

$V_T(ft^3) = 2{,}406 ft^3 + 462 ft^3 = 2{,}868 ft^3$

$V_T(gal) = 18{,}000\ gal + 3455.76\ gal \cong 21{,}456\ gal$

The required liner height for the room is calculated using the following equation:

$$H_L = \text{Required Liner Height} = \frac{V_T}{A_{net}} + 1\ ft \text{ (Equation 9)}$$

The net room area (A_{net}) is the combined footprint from the non-failed vessels in the room subtracted from the room area. There are no other vessels in the Low Point Drain Vessel Area.

$A_{net} = A_{room} - \sum A_{vessel}\ (non - failed)$ (Equation 5)

$\sum A_{vessel}\ (non - failed) = 0\ ft^2$ (Equation 2)

$A_{net} = 924\ ft^2 - 0\ ft^2 = 924\ ft^2$

Therefore,

$$H_L = \frac{2{,}868 ft^3}{924 ft^2} + 1\ ft = 4.10 ft \cong 4\ ft\ 2\ inches\ (rounded\ up\ to\ the\ next\ inch)$$

A-5.2 **Required Liner Height for Evaporator Feed Vessel Area, Room E-0105, Elevation 0 ft**

Scenario: Leakage and spillage of the single largest vessel in area, Evaporator Feed Vessel (DEP-VSL-00002) (Assumption A-3.6) and accumulation of rainfall (Assumption A-3.11). No accumulation of fire water from automatic fire suppression system discharge (Assumption A-3.5).

The total vessel volume is compared to 110% of the maximum operating volume of the vessel to determine the controlling volume:

$Total\ Vessel\ Volume = 42{,}300\ gal$ (Assumption A-3.6)
$110\%\ Maximum\ Operating\ Volume = 1.10 \times\ 38{,}000\ gal = 41{,}800\ gal$ (Assumption A-3.6)
$42{,}300\ gal > 41{,}800\ gal$ ∴ Total Vessel Volume is the Controlling Volume

The total accumulated liquid volume for the Evaporator Feed Vessel area is calculated using the following equation:

$$V_T = V_V + V_R (Equation\ 8)$$

Where

$V_V(gal) = Controlling\ Volume =\ 42{,}300\ gal\ (Total\ Vessel\ Volume)$ (Assumption A-3.6)

$$V_V(ft^3) = 42{,}300 gal \times 0.13368 \frac{ft^3}{gal} \cong 5{,}655\ ft^3 (Equation\ 1)$$

V_R = Volume of Rainfall = $A_{room} \times \left(H_r \times \frac{1\ ft}{12\ in}\right)$ (Equation 7)

$A_{room} = 1{,}774\ ft^2$ (Assumption A-3.4)

$$V_R(ft^3) = 1{,}774\ ft^2 \times \left(1.56\ in\ \times \frac{1 ft}{12 in}\right) \cong 231\ ft^3$$

$$V_R\ (gal) = 231\ ft^3 \times \frac{1\ gal}{0.13368\ ft^3} \cong 1{,}728\ gal\ (Equation\ 1)$$

Therefore,

$$V_T(ft^3) = 5{,}655\ ft^3 + 231\ ft^3 = 5{,}886\ ft^3$$

$$V_T\ (gal) = 42{,}300\ gal + 1{,}728\ gal = 44{,}028\ gal$$

The required liner height for the room is calculated using the following equation:

$$H_L = \text{Required Liner Height} = \frac{V_T}{A_{net}} + 1\ ft \text{ (Equation 9)}$$

The net room area (A_{net}) is the combined footprint from the non-failed vessels in the room subtracted from the room area. The non-failed vessels are all three Evaporator Concentrate Vessels (DEP-VSL-00003A/B/C).

$$A_{net} = A_{room} - \sum A_{vessel}\,(non - failed) \qquad \text{(Equation 5)}$$

$$\sum A_{vessel}\,(non - failed) = 3\left(\frac{\pi d_{conc}^2}{4}\right) \text{ (Equation 2)}$$

d_{conc}= Diameter of Concentrate Vessel = 12 ft 1 in (Assumption A-3.6)

$$\sum A_{vessel}\,(non - failed) = 3\left(\frac{\pi\left[12\ ft + \left(1\ in \times \frac{1ft}{12in}\right)\right]^2}{4}\right) = 344\ ft^2$$

$$A_{net} = 1{,}774\ ft^2 - 344\ ft^2 = 1{,}430\ ft^2$$

Therefore,

$$H_L = \frac{5{,}886 ft^3}{1{,}430 ft^2} + 1ft = 5.12ft \cong 5\ ft\ 2\ inches\ (rounded\ up\ to\ the\ next\ inch)$$

A-5.3 Required Liner Height for Process Condensate Lag Storage Vessel Area, Room E-0106, Elevation 0 ft

Scenario: Leakage and spillage of the single largest vessel in the area, one of the Process Condensate Lag Storage Vessels (DEP-VSL-00005A/B) and accumulation of rainfall (Assumption A-3.11). No accumulation of fire water from automatic fire suppression system discharge (Assumption A-3.5).

The total vessel volume is compared to 110% of the maximum operating volume of the vessel to determine the controlling volume:

$$Total\ Vessel\ Volume = 127{,}260\ gal \text{ (Assumption A-3.6)}$$
$$110\%\ Maximum\ Operating\ Volume = 1.10 \times 111{,}761\ gal = 122{,}937\ gal \text{ (Assumption A-3.6)}$$
$$127{,}260\ gal > 122{,}937\ gal\ \therefore \text{ Total Vessel Volume is the Controlling Volume}$$

The total accumulated liquid volume for the Process Condensate Lag Storage Vessel Area is calculated using the following equation:

$$V_T = V_V + V_R (Equation\ 8)$$

Where

$$V_V(gal) = Controlling\ Volume = 127{,}260\ gal\ (Total\ Vessel\ Volume) \text{ (Assumption A-3.6)}$$

$$V_V(ft^3) = 127{,}260\ gal \times 0.13368 \frac{ft^3}{gal} \cong 17{,}012\ ft^3 (Equation\ 1)$$

V_R (ft^3) = Volume of Rainfall = $A_{room} \times \left(H_r \times \frac{1\ ft}{12\ in}\right)$ (Equation 7)

$A_{room} = 3{,}837\ ft^2$ (Assumption A-3.4)

$$V_R(ft^3) = 3{,}837\ ft^2 \times \left(1.56\ in\ \times \frac{1ft}{12in}\right) \cong 499\ ft^3$$

$$V_R\ (gal) = 499\ ft^3 \times \frac{1\ gal}{0.13368\ ft^3} \cong 3733\ gal\ (Equation\ 1)$$

Therefore,

$$V_T(ft^3) = 17{,}012\ ft^3 + 499\ ft^3 = 17{,}511\ ft^3$$

$$V_T\ (gal) = 127{,}260\ gal + 3{,}733\ gal = 130{,}993\ gal$$

The required liner height for the room is calculated using the following equation:

H_L (ft) = Required Liner Height = $\frac{V_T}{A_{net}}$ + 1 ft (Equation 9)

The net room area (A_{net}) is the combined footprint from the non-failed vessels in the room subtracted from the room area. The non-failed vessels are one of the Process Condensate Lag Storage Vessel (DEP-VSL-00005A/B) and both of the Overhead Sampling Vessels (DEP-VSL-00004A/B).

$$A_{net} = A_{room} - \sum A_{vessel}\ (non - failed) \qquad \text{(Equation 5)}$$

$$\sum A_{vessel}\ (non - failed) = \left(\frac{\pi d_{lag}^2}{4}\right) + 2\left(\frac{\pi d_{overhead}^2}{4}\right) \qquad \text{(Equation 2)}$$

d_{lag} = Diameter of Lag Storage Vessel = 25 ft 1 in (Assumption A-3.6)

$d_{overhead}$ = Diameter of Overhead Sampling Vessel = 14 ft 1 in (Assumption A-3.6)

$$\sum A_{vessel}\ (non - failed) = \left(\frac{\pi\left(\left[25ft + \left(1\ in \times \frac{1ft}{12in}\right)\right]^2\right)}{4}\right) + 2\left(\frac{\pi\left[14ft + \left(1\ in \times \frac{1ft}{12in}\right)\right]^2}{4}\right) = 806\ ft^2$$

$$A_{net} = 3{,}837\ ft^2 - 806\ ft^2 = 3{,}031\ ft^2$$

Therefore,

$$H_L = \frac{17{,}511 ft^3}{3{,}031 ft^2} + 1ft = 6.78\ ft \cong 6\ ft\ 10\ inch\ (rounded\ up\ to\ the\ next\ inch)$$

A-5.4 Required Liner Heights for the West (E-0103) and East (E-0102) Evaporator Process Areas, Elevation 0 ft

Two scenarios are evaluated for West and East Evaporator Process Areas to determine the most conservative liner heights.

A-5.4.1 Scenario One for West Evaporator Process Area (E-0103)

Scenario: Leakage and spillage of the full volume of the single largest vessel with pump suction line in the area, Evaporator Feed Vessel (DEP-VSL-00002), into the West Evaporator Process Area as a result of an Evaporator Feed Pump suction line failure and accumulation of fire water from automatic fire suppression system discharge (Assumption A-3.5). No accumulation from rainfall (Assumption A-3.11).

The total vessel volume is compared to 110% of the maximum operating volume of the vessel to determine the controlling volume:

$$Total\ Vessel\ Volume = 42{,}300\ gal \text{ (Assumption A-3.6)}$$
$$110\%\ Maximum\ Operating\ Volume = 1.10 \times\ 38{,}000\ gal = 41{,}800\ gal \text{ (Assumption A-3.6)}$$
$$42{,}300\ gal > 41{,}800\ gal\ \therefore \text{ Total Vessel Volume is the Controlling Volume}$$

The total accumulated liquid volume for the West Evaporator Process Area is calculated using the following equation:

$$V_T = V_V + V_F (Equation\ 8)$$

Where

$$V_V(gal) = Controlling\ Volume =\ 42{,}300\ gal\ (Total\ Vessel\ Volume) \text{ (Assumption A-3.6)}$$

$$V_V(ft^3) = 42{,}300\ gal \times 0.13368 \frac{ft^3}{gal} \cong 5{,}655\ ft^3 (Equation\ 1)$$

$$V_F = A_{room} \times \rho_{sprinkler} \times T \times 1.1\ (Equation\ 6)$$

$$A_{room} = 3{,}503\ ft^2 \qquad \text{(Assumption A-3.4)}$$

$$V_F(gal) = 3{,}503\ ft^2 \times 0.17 gal/min/ft^2 \times 20\ min \times 1.1 = 13101.22 gal$$
$$V_F(ft^3) = 13{,}101.22\ gal \times 0.13368 \frac{ft^3}{gal} \cong 1{,}751\ ft^3 (Equation\ 1)$$

Therefore,

$$V_T(ft^3) = 5{,}655 ft^3 + 1{,}751 ft^3 = 7{,}406\ ft^3$$

$$V_T(gal) = 42{,}300\ gal + 13{,}101.22\ gal \cong 55{,}401\ gal$$

The required liner height for the room is calculated using the following equation:

$$H_L = \text{Required Liner Height} = \frac{V_T}{A_{net}} + 1\ \text{ft} \qquad \text{(Equation 9)}$$

The net room area (A_{net}) is the combined footprint from the non-failed vessels in the room subtracted from the room area. The non-failed vessels are the Evaporator (DEP-EVAP-00001), the Evaporator Reboiler (DEP-RBLR-00001), and the Evaporator Concentrate/Feed LAW Effluent Cooler (DEP-HX-00001).

$$A_{net} = A_{room} - \sum A_{vessel}\,(non - failed) \qquad \text{(Equation 5)}$$

$$\sum A_{vessel}\,(non - failed) = A_{EVAP} + A_{RBLR} + A_{HX}$$
$$= 79ft^2 + 24ft^2 + 7ft^2 = 110ft^2 \text{ (Assumption A-3.7)}$$

$A_{net} = 3{,}503\ ft^2 - 110\ ft^2 = 3{,}393\ ft^2$

Therefore,

$$H_L = \frac{7{,}406ft^3}{3{,}393ft^2} + 1\ ft = 3.18ft \cong 3\ ft\ 3\ inches\ (rounded\ up\ to\ the\ next\ inch)$$

A-5.4.2 Scenario One for East Evaporator Process Area (E-0102)

Scenario: Leakage and spillage of the full volume of the single largest vessel with a pump suction line in the area, one of the Process Condensate Lag Storage Vessels (DEP-VSL-00005A/B), into the East Evaporator Process Area as a result of a Process Condensate Lag Storage Vessel pump suction line failure and accumulation of fire water from automatic fire suppression system discharge (Assumption A-3.5). No accumulation from rainfall (Assumption A-3.11).

The total vessel volume is compared to 110% of the maximum operating volume of the vessel to determine the controlling volume:

$$Total\ Vessel\ Volume = 127{,}260\ gal \text{ (Assumption A-3.6)}$$
$$110\%\ Maximum\ Operating\ Volume = 1.10 \times\ 111{,}761\ gal = 122{,}937\ gal \text{ (Assumption A-3.6)}$$
$$127{,}260\ gal > 122{,}937\ gal\ \therefore \text{ Total Vessel Volume is the Controlling Volume}$$

The total accumulated liquid volume for the East Evaporator Process Area is calculated below:

$$V_T = V_V + V_F (Equation\ 8)$$

Where

$$V_V(gal) = Controlling\ Volume =\ 127{,}260\ gal\ (Total\ Vessel\ Volume) \text{ (Assumption A-3.6)}$$
$$V_V(ft^3) = 127{,}260\ gal \times 0.13368\frac{ft^3}{gal} \cong 17{,}012\ ft^3 (Equation\ 1)$$

$$V_F = A_{room} \times \rho_{sprinkler} \times T \times 1.1 \ (Equation\ 6)$$

$$A_{room} = 5{,}859\ ft^2 \text{ (Assumption A-3.4)}$$

$$V_F(gal) = 5{,}859\ ft^2 \times 0.17 gal/min/ft^2 \times 20\ min \times 1.1 = 21{,}912.66\ gal$$
$$V_F(ft^3) = 21{,}912.66\ gal \times 0.13368\ \frac{ft^3}{gal} \cong 2{,}929\ ft^3 (Equation\ 1)$$

Therefore,

$$V_T(ft^3) = 17{,}012\ ft^3 + 2{,}929\ ft^3 = 19{,}941\ ft^3$$

$$V_T(gal) = 127{,}260\ gal + 21{,}912.66\ gal \cong 149{,}173\ gal$$

The required liner height for the room is calculated using the following equation:

$$H_L = \text{Required Liner Height} = \frac{V_T}{A_{net}} + 1\ ft \text{ (Equation 9)}$$

The net room area (A_{net}) is the combined footprint from the non-failed vessels in the room subtracted from the room area. The non-failed vessels are the Steam Condensate Water Blowdown Vessel (SCW-VSL-00054), Reboiler Condensate Collection Vessel (DEP-VSL-00008), and Evaporator Condensers (DEP-COND-00001/2/3).

$$A_{net} = A_{room} - \sum A_{vessel}\ (non - failed) \qquad \text{(Equation 5)}$$

$$\sum A_{vessel}\ (non - failed) = A_{SCW} + A_{VSL8} + A_{COND1} + A_{COND2} + A_{COND3}$$
$$= 13\ \text{ft}^2 + 13\ \text{ft}^2 + 84\ \text{ft}^2 + 16\ \text{ft}^2 + 6\ \text{ft}^2 = 132\ \text{ft}^2$$
(Assumption A-3.7)

$A_{net} = 5{,}859\ \text{ft}^2 - 132\ \text{ft}^2 = 5{,}727\ \text{ft}^2$

Therefore,

$$H_L = \frac{19{,}941 ft^3}{5{,}727 ft^2} + 1\ ft = 4.48\ ft \cong 4\ ft\ 6\ inches\ (rounded\ up\ to\ the\ next\ inch)$$

A-5.4.3 Scenario Two for West and East Evaporator Process Areas

Scenario: The full volume of the single largest vessel with a pump suction in either Evaporator Process Areas, one of the Process Condensate Lag Storage Vessels (DEP-VSL-00005A/B) normalizing between the combined process areas. Additionally, fire water from automatic fire suppression system discharge is accumulated (Assumption A-3.5). No accumulation of rainfall (Assumption A-3.11)

The total accumulated liquid volume for the West and East evaporator process areas is calculated using the following equation:

$$V_T = V_V + V_F \ (Equation\ 8)$$

Where

$V_V(gal) = Controlling\ Volume = \ 127{,}260\ gal\ (Total\ Vessel\ Volume)$(Assumption A-3.6)

$V_V(ft^3) = 127{,}260\ gal \times 0.13368\ \frac{ft^3}{gal} \cong 17{,}012\ ft^3 (Equation\ 1)$

$V_F = A_{room} \times \rho_{sprinkler} \times T \times 1.1\ (Equation\ 6)$

$A_{room} = (3{,}503\ ft^2 + 5{,}859\ ft^2) = 9{,}362 ft^2$ (Assumption A-3.4)

$V_F(gal) = 9{,}362\ ft^2 \times 0.17\ gal/min/ft^2 \times 20\ min \times 1.1 = 35{,}013.88\ gal$

$V_F(ft^3) = 35{,}013.88\ gal \times 0.13368 \frac{ft^3}{gal} \cong 4{,}681 ft^3 (Equation\ 1)$

Therefore,

$V_T(ft^3) = 17{,}012\ ft^3 + 4{,}681\ ft^3 = 21{,}693\ ft^3$

$V_T(gal) = 127{,}260\ gal + 35{,}013.88\ gal \cong 162{,}274\ gal$

The required liner height for the room is calculated using the following equation:

$$H_L = \text{Required Liner Height} = \frac{V_T}{A_{net}} + 1ft \ \text{(Equation 9)}$$

The net room area (A_{net}) is the combined footprint from the non-failed vessels in the room subtracted from the room area. The non-failed vessels are the Evaporator Separator (DEP-EVAP-00001), Evaporator Reboiler (DEP-RBLR-00001), Evaporator Concentrate/Feed LAW Effluent Cooler (DEP-HX-00001), Steam Condensate Water Blowdown Vessel (SCW-VSL-00054), Reboiler Condensate Collection Vessel (DEP-VSL-00008), and Evaporator Condensers (DEP-COND-00001/2/3).

$$A_{net} = A_{room} - \sum A_{vessel}\ (non - failed) \qquad \text{(Equation 5)}$$

$$\sum A_{vessel}(non - failed) = A_{EVAP} + A_{RBLR} + A_{HX} + A_{SCW} + A_{VSL8} + A_{COND1} + A_{COND2} + A_{COND3}$$

$$\sum A_{vessel}(non - failed) = 79ft^2 + 24ft^2 + 7ft^2 + 13\text{ft}^2 + 13\text{ft}^2 + 84\text{ft}^2 + 16\text{ft}^2 + 6\text{ft}^2 = 242\ ft^2 \text{ (Assumption A-3.7)}$$

A_{net} = 9,362 ft^2 – 242 ft^2 = 9120 ft^2

Therefore,

$$H_L = \frac{21{,}693 ft^3}{9{,}120 ft^2} + 1ft = 3.38\ ft \cong 3\ ft\ 5\ inches\ (rounded\ up\ to\ the\ next\ inch)$$

The required liner height for this scenario is greater than the required liner height calculated in Scenario 1 for the West Evaporator Process Area, but smaller than the required liner height calculated in Scenario 1 for the East Evaporator Process Area. Therefore, 3 ft 5 inches will be the required liner height for the West Evaporator Process Area and 4 ft 6 inches will be the required liner height for the East Evaporator Process Area.

A-5.5 Calculation Summary

Calculation Section Number	Elevation (ft)	Containment Area Room Number	Area of Room (ft^2)	Area of Non-Failed Vessels (ft^2)	Net Room Area (ft^2)	Total Volume of Largest Vessel (gal)	Total Volume of Largest Vessel (ft^3)	Fire Water Volume (gal)	Fire Water Volume (ft^3)	Rainfall Volume (gal)	Rainfall Volume (ft^3)	Total Accumulated Liquid Volume (gal)	Total Accumulated Liquid Volume (ft^3)	Required Liner Height (ft)
A-5.1	-39	ED-B001 (Low Point Drain Vessel Area)	924	0	924	18,000	2,406	3,456	462	Not Applicable. Rainfall is not accumulated in indoor areas.		21,456	2,868	4 ft 2 in
A-5.2	0	E-0105 (Evaporator Feed Vessel Area)	1,774	344	1,430	42,300	5,655	Not Applicable. Fire water is not accumulated in outdoor areas.		1,728	231	44,028	5,886	5 ft 2 in
A-5.3	0	E-0106 (Process Condensate Lag Storage Vessel Area)	3,837	806	3,031	127,260	17,012			3,733	499	130,993	17,511	6 ft 10 in
A-5.4.1	0	E-0103 (West Evaporator Process Area) Scenario 1	3,503	110	3,393	42,300	5,655	13,101	1,751	Not Applicable. Rainfall is not accumulated in indoor areas.		55,401	7,406	3 ft 3 in
A-5.4.2	0	E-0102 (East Evaporator Process Area) Scenario 1	5,859	132	5,727	127,260	17,012	21,913	2,929			149,173	19,941	4 ft 6 in
A-5.4.3	0	E-0102/E-0103 (West & East Evaporator Process Area) Scenario 2	9,362	242	9,120	127,260	17,012	35,014	4,681			162,274	21,693	3 ft 5 in

A-6 References

A-6.1 24590-BOF-P1-25-00001, Rev. 0, Balance of Facilities LAW Effluent Process Bldg & LAW Effluent Drain Tank Bldg General Arrangement Plan at Elev. 0'-0".

A-6.2 24590-WTP-DB-ENG-01-001, Rev. 3, Basis of Design

A-6.3 24590-BOF-M0C-DEP-00001, Rev. B, Liner Height Calculation in the EMF

A-6.4 PNL-4622 UC-11, June 1983, Climatological Summary for the Hanford Area

A-6.5 24590-BOF-A5-25-05200001, Rev. 0, LAW Effluent Process Bldg 25 & Drain Tank Bldg 25A Architectural Room Finish Schedule

A-6.6 24590-WTP-GPG-M-033, Rev. 4, Fire Water Floor Drain System

Issued by
RPP-WTP PDC

Dangerous Waste Permit (DWP) Liner Heights in the Effluent Management Facility (EMF)

Document title: Dangerous Waste Permit (DWP) Liner Heights in the Effluent Management Facility (EMF)

Document number: 24590-BOF-PER-M-16-003, Rev 0

Contract number: DE-AC27-01RV14136

Department: Mechanical Systems

Author(s): Elaine Tsai

Checked by: Bryant Leung

Issue status: Issued for Permitting Use

Approved by: Youssef Mohammad-Zadeh

Approver's position: Engineering Group Supervisor

Approver's signature: _____ Signature 10/24/16 Date

Contents of this document are Dangerous Waste Permit Affecting.

River Protection Project
Waste Treatment Plant
2435 Stevens Center Place
Richland, WA 99354
United States of America
Tel: 509 371 2000

This bound document contains a total of 29 sheets

Notice

Please note that source, special nuclear, and byproduct materials, as defined in the Atomic Energy Act of 1954 (AEA), are regulated at the US Department of Energy (DOE) facilities exclusively by DOE acting pursuant to its AEA authority. DOE asserts, that pursuant to the AEA, it has sole and exclusive responsibility and authority to regulate source, special nuclear, and byproduct materials at DOE-owned nuclear facilities. Information contained herein on radionuclides is provided for process description purposes only.

History Sheet

Rev	Reason for revision	Revised by
0	Issued for Permitting Use.	E. Tsai

Contents

Notice iii

History Sheet iv

Acronyms vi

1 Summary 1

2 Introduction 1

3 Applicable Documents 1

4 Description 2

Appendices

Appendix A Calculation of Accumulated Liquid Volumes and Liner Heights ..... A-i

Acronyms

AEA	Atomic Energy Act of 1954
DOE	Department of Energy
DWP	Dangerous Waste Permit
EMF	Effluent Management Facility
WAC	Washington Administrative Code

1 Summary

The required and design liner heights for each room in the EMF containing dangerous waste are listed below. The liner heights are from the high point of the sloped floor.

Area	Room	Required Height	Design Height
Low Point Drain Vessel Area	ED-B001	4 ft 2 inches	5 ft
Evaporator Feed Vessel Area	E-0105	5 ft 2 inches	7 ft 6 inches
Process Condensate Lag Storage Vessel Area	E-0106	6 ft 10 inches	8 ft 4 inches
West Evaporator Process Area	E-0103	3 ft 5 inches	4 ft 6 inches
East Evaporator Process Area	E-0102	4 ft 6 inches	5 ft 10 inches

The liner heights were calculated by taking the total accumulated liquid volume, including the total volume of a single largest vessel in the room and rainfall or fire water, as applicable, dividing that by the net room area and adding a foot to account for the volume of miscellaneous equipment and components that may be within the containment area. For each area, it was determined whether a leak from another area could spill into the specified area. If a potential for leaking from another area existed, the most bounding scenario was used to determine the liner height.

Design heights were taken from the Architectural Room Finish Schedule (Ref. A-6.5).

2 Introduction

The regulatory codes for the secondary containment areas are contained in the Washington Administrative Code, WAC 173-303-640(4)(e)(i). The regulatory requirement states that external liner systems must be:

> "(A) Designed or operated to contain one hundred percent capacity of the largest tank within its boundary;
> (B) Designed or operated to prevent run-on or infiltration of precipitation into the secondary containment system unless the collection system has sufficient excess capacity to contain run-on or infiltration. Such additional capacity must be sufficient to contain precipitation from a twenty-five year, twenty-four hour rainfall event…" [WAC 173-303-640(4)(e)(i)] (Applicable Documents 3.1)

The calculated liner heights for indoor areas must also be able to contain the volume from 20 minutes of fire suppression water as required by the Basis of Design (Ref. A-6.2) in addition to the volume of the dangerous waste. This report assesses the liner heights required to contain dangerous waste, rainfall, and fire water in the Effluent Management Facility (EMF).

3 Applicable Documents

3.1 Washington Administrative Code, December 18, 2014, Title 173 Chapter 303 Section 640

3.2 NFPA 13, *Standard for Installation of Sprinkler Systems*, 1999

4 Description

There are five areas in the EMF that are considered dangerous waste permit affecting. The five areas are the Low Point Drain Vessel Area, Evaporator Feed Vessel Area, Process Condensate Lag Storage Vessel Area, West Evaporator Process Area, and East Evaporator Process Area. Vessel and pump suction line failures are evaluated for each area to determine the required liner height that will contain the total accumulated liquid volume of dangerous waste and rainfall or fire water, as applicable.

For indoor areas, it is assumed (Assumption A-3.5 and A-3.11) that the area will contain automatic sprinklers and there will be no accumulation from precipitation. Therefore, the liner must be sized to contain:

- The larger of 110% of volume up to the overflow line of the largest vessel (i.e. maximum operating volume), used as a conservative criteria per Basis of Design requirement 11.3.5.1 (Ref. A-6.2), or 100% of the capacity of the largest vessel/tank within the secondary containment boundary per WAC 173-303-640[4][e][i][A] (Applicable Documents 3.1) and
- Accumulation of 20 minutes of fire water from automatic sprinkler discharge in accordance with Basis of Design requirement 14.10.1.2.1 (Ref. A-6.2) with 10% added overage to account for hydraulic overages (Assumption A-3.10)

For outdoor areas, it is assumed (Assumption A-3.5 and A-3.11) that the area will not contain automatic sprinklers and there will be accumulation from precipitation. Therefore, the liner must be sized to contain:

- The larger of 110% of volume up to the overflow of the largest vessel (i.e. maximum operating volume), used as a conservative criteria per Basis of Design requirement 11.3.5.1 (Ref. A-6.2), or 100% of the capacity of the largest vessel/tank within the secondary containment boundary per WAC 173-303-640[4][e][i][A] (Applicable Documents 3.1) and
- Precipitation from a twenty-five-year, twenty-four-hour rainfall event per WAC 173-303-640[4][e][i][B] (Applicable Documents 3.1)

4.1 Low Point Drain Vessel Area (ED-B001)

Room ED-B001, the Low Point Drain Vessel Area, is an area located below grade in the Law Effluent Drain Tank Building at the (-) 39 ft. elevation. It contains one vessel, the Low Point Drain Vessel (DEP-VSL-00001).

In the event of a vessel failure, leakage and spillage could occur. Since the room is indoors, it could also accumulate fire water from the automatic sprinkler system in the event of a fire.

The Low Point Drain Vessel Area is not adjacent to other areas containing pumps and vessels; therefore, spillage and leakage from another areas is not of concern and a scenario assuming discharge of the total volume of liquid contained in the Low Point Drain Vessel (DEP-VSL-00001) and 20 minutes of fire water is evaluated as the most conservative scenario.

The total Low Point Drain Vessel volume of 18,000 gal (2,406 ft^3) is greater than 110% of the maximum operating volume (15,180 gal); therefore, 18,000 gal (2,406 ft^3) is used as the controlling vessel volume in this scenario. 462 ft^3 of fire water (20 minutes of sprinkler discharge with a 10% margin for overage) is added to the total vessel volume to determine the total accumulated liquid volume. The total accumulated liquid volume that must be contained by the liner in the room = 2,406 ft^3 + 462 ft^3 = 2,868 ft^3.

The room slopes to a single sump (DEP-SUMP-00001). To simplify the calculation, the available room volume below the high point of the sloped floor is omitted. This approach is conservative because assuming the floor to be flat and neglecting the sloped area leads to a taller liner height.

The liner height is measured from the high point of the sloped floor. The required liner height above the high point is equal to the total volume of 2,868 ft^3 divided by the net room area (924 ft^2) of the room, which is the cross-sectional area of the room minus the footprints of non-failed vessels within the room, plus 1 ft to account for miscellaneous equipment and components within the area, which is equal to 4.10 ft = 4 ft 2 in (rounded to the next inch).

The design liner height is 5 ft (Ref. A-6.5), therefore the liner is sufficient for the scenario. The detailed calculation for the required liner height is provided in Appendix A.

4.2 Evaporator Feed Vessel Area (Room E-0105)

Room E-0105, Evaporator Feed Vessel Area, is an area located in the northwest side of EMF at the 0 ft. elevation. It contains the following four vessels:

- Evaporator Feed Vessel DEP-VSL-00002
- Evaporator Concentrate Vessel DEP-VSL-00003A
- Evaporator Concentrate Vessel DEP-VSL-00003B
- Evaporator Concentrate Vessel DEP-VSL-00003C

In the event of a vessel failure, leakage and spillage could occur. Since the room is outdoors, it could also accumulate rainfall.

The wall shared between the Evaporator Feed Vessel Area and the Process Condensate Lag Storage Vessel Area does not contain any penetrations; therefore, there is no potential for accumulated liquid in the Process Condensate Lag Storage Vessel Area to leak into the Evaporator Feed Vessel Area. The penetrations into the building are welded; therefore, no accumulated liquid from within the building will have the potential of leaking outdoors. To calculate the required height of the liner in this area, a scenario assuming discharge of the total volume of liquid from the single largest vessel in the room, the Evaporator Feed Vessel (DEP-VSL-00002), and accumulation of rainfall is evaluated as the most conservative scenario.

The total Evaporator Feed Vessel volume of 42,300 gal (5,655 ft^3) is greater than 110% of the maximum operating volume (41,800 gal); therefore, 42,300 gal (5,655 ft^3) is used as the controlling volume. 1.56 inches of rainfall, which equates to 231 ft^3 of rainfall for the cross-sectional area (1,774 ft^2) of the room is added to the vessel volume to determine the total accumulated liquid volume. The total accumulated liquid volume that must be contained by the liner in the room = 5,655 ft^3 + 231 ft^3 = 5,886 ft^3.

The room slopes down to two sumps (DEP-SUMP-00004A/B). To simplify the calculation, the available room volume below the high point of the sloped floor is omitted. This approach is conservative because assuming the floor to be flat and neglecting the sloped area leads to a taller liner height.

The liner height is measured from the high point of the sloped floor. The required liner height above the high point is equal to the total volume of 5,886 ft^3 divided by the net room area (1,430 ft^2) of the room, which is the cross-sectional area of the room minus the footprints of non-failed vessels within the room,

plus 1 ft to account for miscellaneous equipment and components within the area, which is equal to 5.12 ft = 5 ft 2 in (rounded to the next inch).

The design liner height is 7 ft 6 in (Ref. A-6.5), therefore the liner is sufficient for the scenario. The detailed calculation for the required liner height is provided in Appendix A.

4.3 Process Condensate Lag Storage Vessel Area (E-0106)

Room E-0106, Process Condensate Lag Storage Area, is an area located in the north side of EMF at the 0 ft. elevation. It contains the following four vessels:

- Overhead Sampling Vessel DEP-VSL-00004A
- Overhead Sampling Vessel DEP-VSL-00004B
- Process Condensate Lag Storage Vessel DEP-VSL-00005A
- Process Condensate Lag Storage Vessel DEP-VSL-00005B

In the event of a vessel failure, leakage and spillage could occur. Since the room is outdoors, it could also accumulate rainfall.

The wall shared between the Process Condensate Lag Storage Vessel Area and the Evaporator Feed Vessel Area does not contain any penetrations; therefore, there is no potential for accumulated liquid in the Evaporator Feed Vessel Area to leak into the Process Condensate Lag Storage Vessel Area. The penetrations into the building are welded; therefore, no accumulated liquid from within the building will have the potential of leaking outdoors. To calculate the required height of the liner in this area, a scenario assuming discharge of the total volume of liquid from the single largest vessel in the room, one of the Process Condensate Lag Storage Vessels (DEP-VSL-00005A or DEP-VSL-00005B), and accumulation of rainfall is evaluated as the most conservative scenario.

The total Process Condensate Lag Storage Vessel volume of 127,260 gal (17,012 ft^3) is greater than 110% of the maximum operating volume (122,937 gal); therefore, 127,260 gal (17,012 ft^3) is the controlling volume. 1.56 inches of rainfall, which equates to 499 ft^3 of rainfall for the cross-sectional floor area (3,837 ft^2) of the room is added to the vessel volume to determine the total accumulated liquid volume. The total accumulated liquid volume that must be contained by the liner in the room = 17,012 ft^3 + 499 ft^3 = 17,511 ft^3.

The room slopes down to two sumps (DEP-SUMP-00005A/B). To simplify the calculation, the available room volume below the high point of the sloped floor is omitted. This approach is conservative because assuming the floor to be flat and neglecting the sloped area leads to a taller liner height.

The liner height is measured from the high point of the sloped floor. The required liner height above the high point is equal to the total volume of 17,511 ft^3 divided by the net room area (3,031 ft^2) of the room, which is the cross-sectional area of the room minus the footprints of non-failed vessels within the room, plus 1 ft to account for miscellaneous equipment and components within the area, which is equal to 6.77 ft = 6 ft 10 in (rounded to the next inch).

The design liner height is 8 ft 4 in (Ref. A-6.5), therefore the liner is sufficient for the scenario. The detailed calculation for the required liner height is provided in Appendix A.

4.4 West (E-0103) and East (E-0102) Evaporator Process Areas

Room E-0103, West Evaporator Process Area, is an area located in the southwest side of EMF at 0 ft. elevation. The room contains the discharge pumps (DEP-PMP-00002A/B and DEP-PMP-00012A/B/C) from the Evaporator Feed Vessel (DEP-VSL-00002) and discharge pumps (DEP-PMP-00003A/B) from the Evaporator Concentrate Vessels (DEP-VSL-00003A/B/C). The room also contains miscellaneous vessels such as the Evaporator Separator (DEP-EVAP-00001), the Evaporator Reboiler (DEP-RBLR-00001), and the Evaporator Concentrate/Feed LAW Effluent Cooler (DEP-HX-00001).

Room E-0102, East Evaporator Process Area, is an area located in the southeast side of EMF at 0 ft. elevation. The room contains the discharge pumps (DEP-PMP-00004A/B/C) of the Overhead Sampling Vessels (DEP-VSL-00004A/B) and discharge pumps (DEP-PMP-000015A/B/C and DEP-PMP-00005A/B) of the Process Condensate Lag Storage Vessels (DEP-VSL-00005A/B). The room also contains miscellaneous vessels such as the three Evaporator Condensers (DEP-COND-00001/2/3), Reboiler Condensate Collection Vessel (DEP-VSL-00008), and the Steam Condensate Water Blowdown Vessel (SCW-VSL-00054).

In the event that a pump suction line fails, the entire volume of the connected vessel could discharge into the room. Since the rooms are indoor, they could also accumulate fire water from the automatic sprinkler system. The door between the two process areas cannot be credited as a seal; therefore, accumulated liquid in one area can leak into the other. In order to determine the appropriate liner height, two scenarios for each area are considered.

4.4.1 Scenario One for West Evaporator Process Area (E-0103)

The first scenario to be evaluated for the West Evaporator Process Area is the ability to contain the total volume of the single largest vessel connected to the pumps housed in the area and accumulation of fire water. Since the West Evaporator Process Area houses the discharge pumps for the Evaporator Feed and Evaporator Concentrate Vessels, the single largest vessel connected to the pumps in the area is the Evaporator Feed Vessel (DEP-VSL-00002).

Per Section 4.2, the controlling volume for the Evaporator Feed Vessel is 42,300 gal (5,655 ft^3). 1,751 ft^3 of fire water (20 minutes of sprinkler discharge with a 10% margin for overage) is added to the vessel volume to determine the total accumulated liquid volume. The total accumulated liquid volume that must be contained by the liner in the room = 5,655 ft^3 + 1,751 ft^3 = 7,406 ft^3.

The room slopes down to two sumps (DEP-SUMP-00002A/B). To simplify the calculation, the available room volume below the high point of the sloped floor is omitted. This approach is conservative because assuming the floor to be flat and neglecting the sloped area leads to a taller liner height.

The liner height is measured from the high point of the sloped floor. The required liner height above the high point is equal to the total volume of 7,406 ft^3 divided by the net room area (3,393 ft^2) of the room, which is the cross-sectional area of the room minus the footprints of non-failed vessels within the room, plus 1 ft to account for miscellaneous equipment and components within the area, which is equal to 3.18 ft = 3 ft 3 in (rounded to the next inch).

The design liner height is 4 ft 6 in (Ref. A-6.5), therefore the liner is sufficient for the scenario. The detailed calculation for the required liner height is provided in Appendix A.

4.4.2 Scenario One for East Evaporator Process Area (E-0102)

The first scenario to be evaluated for the East Evaporator Process Area is the ability to contain the total volume of the single largest vessel connected to the pumps housed in the area and accumulation of fire water. Since the East Evaporator Process Area houses the discharge pumps for the Overhead Sampling and Process Condensate Lag Storage Vessels, the single largest vessel connected to the pumps in the area is one of the Process Condensate Lag Storage Vessels (DEP-VSL-00005A/B).

Per Section 4.3, the controlling volume for the Process Condensate Lag Storage Vessel is 127,260 gal (17,012 ft^3). 2,929 ft^3 of fire water (20 minutes of sprinkler discharge with a 10% margin for overage) is added to the vessel volume to determine the total accumulated liquid volume. The total accumulated liquid volume that must be contained by the liner in the room = 17,012 ft^3 + 2,929 ft^3 = 19,941 ft^3.

The room slopes down to two sumps (DEP-SUMP-00003A/B). To simplify the calculation, the available room volume below the high point of the sloped floor is omitted. This approach is conservative because assuming the floor to be flat and neglecting the sloped area leads to a taller liner height.

The liner height is measured from the high point of the sloped floor. The required liner height above the high point is equal to the total volume of 19,941 ft^3 divided by the net room area (5,727 ft^2) of the room, which is the cross-sectional area of the room minus the footprints of non-failed vessels within the room, plus 1 ft to account for miscellaneous equipment and components within the area, which is equal to 4.48 ft = 4 ft 6 in (rounded to the next inch).

The design liner height is 5 ft 10 in (Ref. A-6.5), therefore the liner is sufficient for the scenario. The detailed calculation for the required liner height is provided in Appendix A.

4.4.3 Scenario Two for West and East Evaporator Process Areas

The second scenario to be evaluated for both Evaporator Process Areas is to consider the ability to contain the total normalized accumulated liquid in both areas. This scenario considers the pump suction line for the single largest vessel associated with pumps in either process area to fail, therefore, the total accumulated liquid would contain the total vessel volume of a single Process Condensate Lag Storage Vessel (DEP-VSL-00005A/B) and the accumulation of fire water across both areas.

Per Section 4.3, the controlling volume for Process Condensate Lag Storage Vessel is 127,260 gal (17,012 ft^3). 4,681 ft^3 of fire water (20 minutes of sprinkler discharge with a 10% margin for overage) is added to the vessel volume to determine the total accumulated liquid volume. The total accumulated liquid volume that must be contained by the liner in the West and East Evaporator Process Areas = 17,012 ft^3 + 4,681 ft^3 = 21,693 ft^3.

The liner height is measured from the high point of the sloped floor, which is conservative because neglecting the volume under the sloped area leads to a taller liner height. The required liner height above the high point is equal to the total volume of 21,693 ft^3 divided by the net room area (9,120 ft^2) of the room, which is the cross-sectional area of both process areas minus the footprints of non-failed vessels in both areas, plus 1 ft to account for miscellaneous equipment and components within the area, which is equal to 3.38 ft = 3 ft 5 in (rounded to the next inch). The detailed calculation for the required liner height is provided in Appendix A.

Based on evaluation of the two scenarios for both Evaporator Process Areas, the required liner height determined in scenario two (Section 4.4.3) is greater than the required liner height determined in scenario one (Section 4.4.1) for the West Evaporator Process Area, but smaller than the required liner height determined in scenario one (Section 4.4.2) for the East Evaporator Process Area. Therefore, 3 ft 5 inches will be the required liner height for the West Evaporator Process Area and 4 ft 6 inches will be the required liner height for the East Evaporator Process Area. The design liner height for West and East Evaporator Process Areas are 4 ft 6 inches and 5 ft 10 inches (Ref. A-6.5), respectively, therefore, the liner heights are sufficient.

Appendix A
Calculation of Accumulated Liquid Volumes and Liner Heights

Appendix A: Calculation of Accumulated Liquid Volumes and Required Liner Heights

A-1 Purpose

The purpose of this calculation is to size the required liner heights for the dangerous waste containment areas of the Effluent Management Facility at elevation -39 ft and elevation 0 ft. The Low Point Drain Vessel Area is at the -39 ft elevation and the Evaporator Feed Vessel Area, Process Condensate Lag Storage Vessel Area, West Evaporator Process Area, and East Evaporator Process Area are located at the 0 ft elevation as shown on the Effluent Management Facility General Arrangement Drawing (Ref. A-6.1).

A-2 Criteria and Design Inputs

A-2.1 Secondary containment for indoor storage areas shall be designed to contain a spill from the largest vessel plus the design flow volume of fire-protection water calculated to discharge from the fire-extinguishing system over the area of the room for a period of 20 minutes (Ref. A-6.2 Sec. 14.10.1.2.1).

A-2.2 Secondary containment external liners shall be designed to contain one hundred percent of the capacity of the largest tank within its boundary as well as precipitation from a twenty-five year, twenty-four hour rainfall event (Applicable Documents 3.1 WAC 173-303-640[4][e][i][A], WAC 173-303-640[4][e][i][B], and Ref. A-6.2 Sec. 14.10.1.2.1).

A-2.3 The twenty-five-year, twenty-four-hour rainfall event for the Hanford Site is 1.56 inches (Ref. A-6.4 Table 61).

A-2.4 The liners are designed to contain one hundred percent of the largest tank within its boundary, or one hundred ten percent of the volume up to the overflow (i.e., maximum operating volume) of the largest tank within its boundary (Applicable Documents 3.1 WAC 173-303-640[4][e][i][B] and Reference A-6.2 Section 11.3.5.1).

A-3 Assumptions

A-3.1 To evaluate the worst case scenario, the volume of the vessel is assumed to leak completely onto the floor until it reaches equilibrium with the surrounding liquid level.

A-3.2 The calculation for net room area assumes that the area beneath non-failed vessels or tanks do not contain any spilled liquids.

A-3.3 In a fire event, it is assumed that the fire water will remain in the containment area with no credit given to the operation of area sump pump(s).

A-3.4 Room dimensions used in calculating area and volumes are assumed to be the following:

Room	Area	Dimensions (Ref. A-6.3)		
		Length	Width	Area (ft^2)
ED-B001	Low Point Drain Vessel Area	28’	33’	924
E-0105	Evaporator Feed Vessel Area	45’6”	39’	1,774
E-0106	Process Condensate Lag Storage Vessel Area	45’6”	84’4”	3,837
E-0103	West Evaporator Process Area	62’	56’6”	3,503
E-0102	East Evaporator Process Area	62’	94’6”	5,859

A-3.5 All inside areas are assumed to have a fire sprinkler system. All outside areas are assumed not to have a fire sprinkler system.

A-3.6 The following vessels are contained within each listed room as shown on the general arrangement drawing (Ref. A-6.1) and assumed to have the diameters and volumes below (Ref. A-6.3):

Room	Vessel	Elevation	Vessel Diameter	Total Vessel Volume (gal)	Maximum Operating Volume (gal)
ED-B001	Low Point Drain Vessel (DEP-VSL-00001)	- 39 ft	14 ft 1 in	18,000	13,800
E-0105	Evaporator Feed Vessel (DEP-VSL-00002)	0 ft	14 ft 1 in	42,300	38,000
	Evaporator Concentrate Vessels (DEP-VSL-00003A/B/C)	0 ft	12 ft 1 in	14,805	11,703
E-0106	Overhead Sampling Vessels (DEP-VSL-00004A/B)	0 ft	14 ft 1in	40,800	36,600
	Process Condensate Lag Storage Vessels (DEP-VSL-00005A/B)	0 ft	25 ft 1 in	127,260	111,761

A-3.7 Miscellaneous vessels in the West and East Evaporator Process Areas are assumed to have the following dimensions and footprints (Ref. A-6.3):

Room	Equipment	Dimensions	Footprint
E-0103	DEP-EVAP-00001	10’ D x 23’ H	79 ft^2
E-0103	DEP-RBLR-00001	6’ L x 4’ W x 14’ H	24 ft^2
E-0103	DEP-HX-00001	2’6” L x 2’6” W 6’8” H	7 ft^2
E-0102	SCW-VSL-00054	4’ D x 9’ H	13 ft^2
E-0102	DEP-VSL-00008	4’ D x 3’ T-T	13 ft^2

E-0102	DEP-COND-00001	21' L x 4' W x 10' H	84 ft^2
E-0102	DEP-COND-00002	8' L x 2' W x 2' H	16 ft^2
E-0102	DEP-COND-00003	6' L x 1' W x 2' H	6 ft^2

A-3.8 The Evaporator Separator (DEP-EVAP-00001), Evaporator Condensers (DEP-COND-00001/2/3), Evaporator Reboiler (DEP-RBLR-00001), Reboiler Condensate Collection Vessel (DEP-VSL-00008), Steam Condensate Water Blowdown Vessel (SCW-VSL-00054), and the Evaporator Concentrate/Feed LAW Effluent Cooler (DEP-HX-00001) are not considered in determining the single largest vessel in each area because their capacities are expected to be significantly smaller than the process vessel volumes that are considered.

A-3.9 One (1) ft is added to the secondary containment height to account for the volume of miscellaneous equipment and components that may be within the containment area. The volume of miscellaneous equipment and components is not expected to challenge the volume from one foot of height in the containment area.

A-3.10 An automatic sprinkler system design density is assumed to be 0.17 gpm/ft^2 with 10 percent added to account for hydraulic overages (Applicable Documents 3.2 and Ref. A-6.6).

A-3.11 Precipitation will only accumulate in the outdoor areas.

A-4 Methodology

To determine the required liner height for the worst case scenario in each containment area, the vessels are considered to be completely filled and sitting on the floor and the largest vessel is expected to leak completely into the room. In addition, for the Evaporator Process Areas, it is also assumed that the leak has the capability of spilling between areas and normalizing within the combined area because doors/walls in the area cannot be credited as seals. Therefore, each containment area must be evaluated for the leaking of the total volume of the largest vessel in the area or 110% of the maximum operating volume, whichever is larger, as well as leaking from adjacent areas and rainfall or fire water, as applicable.

A-4.1 Conversion

Volume (ft^3) = $Volume\ (gal) \times 0.13368 \frac{ft^3}{gal}$ (Equation 1)

A-4.2 Vessel

A_{vessel} (ft^2) = Vessel Footprint Area = $\frac{\pi d^2}{4}$ (Equation 2)

Where $\pi = 3.14$
d (ft) = Vessel Diameter

A-4.3 Room Dimensions and Equations

A_{room} (ft^2) = Area of a Rectangular Room = L x W (Equation 3)

V_{room} (ft^3) = Volume of a Rectangular Room = L x W x H (Equation 4)

Where L (ft) = Length of room
W (ft) = Width of room
H (ft) = Height of room

$A_{net}(ft^2) = Net\ Room\ Area = A_{room} - \sum A_{vessel}\ (non - failed)$ (Equation 5)

A-4.4 Fire Water Discharge Volume for Automatic Fire Suppression Systems

V_F (ft^3) = Volume of Fire Water = $A_{room} \times \rho_{sprinkler} \times T \times 1.1$ (Equation 6)

Where A_{room} (ft^2) = Area of a Rectangular Room
$\rho_{sprinkler}$ ($gal/min/ft^2$)= Sprinkler Discharge Density (0.17 gal/min/ft^2) (Assumption A-3.10)
T (min) = Sprinkler Discharge Time (20 minutes) (Input A-2.1)
1.1 = 10% Margin for Hydraulic Overages (Assumption A-3.10)

A-4.5 Rainfall Volume

V_R (ft^3) = Volume of Rainfall = $A_{room} \times \left(H_r \times \frac{1\ ft}{12\ in}\right)$ (Equation 7)

Where A_{room} (ft^2) = Area of a Rectangular Room
H_r (in) = Height of Rainfall from a Twenty-Five-Year, Twenty-Four-Hour Rainfall Event
= 1.56 inches (Input A-2.3)

A-4.6 Accumulated Liquid Volume and Required Liner Height

V_T = Total Accumulated Liquid Volume
= V_V + (V_F or V_R), whichever is applicable (Equation 8)

Where V_V = 100% Total Vessel Volume or 110% of the Maximum Operating Volume, whichever is larger
V_F = Volume of Fire Water
V_R = Volume of Rainfall

H_L (ft) = Required Liner Height = $\frac{V_T}{A_{net}}$ +1 ft (Equation 9)

Where V_T (ft^3) = Total Accumulated Liquid Volume
A_{net} (ft^2) = Net Room Area
1 ft = Volume of Miscellaneous Equipment and Components (Assumption A-3.9)

A-5 Calculations

A-5.1 Required Liner Height for Low Point Drain Vessel Area, Room ED-B001, Elevation -39 ft

Scenario: Failure of the Low Point Drain Vessel (DEP-VSL-00001) and accumulation of fire water from automatic fire suppression system discharge (Assumption A-3.5). No rainfall will accumulate (A-3.11)

The total vessel volume is compared to 110% of the maximum operating volume of the vessel to determine the controlling volume:

$$Total\ Vessel\ Volume = 18{,}000\ gal \text{ (Assumption A-3.6)}$$
$$110\%\ Maximum\ Operating\ Volume = 1.10 \times\ 13{,}800\ gal = 15{,}180\ gal \text{ (Assumption A-3.6)}$$
$$18{,}000\ gal > 15{,}180\ gal\ \therefore \text{ Total Vessel Volume is the Controlling Volume}$$

The total accumulated liquid volume for the Low Point Drain Vessel Area is calculated using the following equation:

$$V_T = V_V + V_F (Equation\ 8)$$

Where

$V_V(gal) = Controlling\ Volume =\ 18{,}000\ gal\ (Total\ Vessel\ Volume)$(Assumption A-3.6)

$V_V(ft^3) = 18{,}000\ gal \times 0.13368\ \frac{ft^3}{gal} \cong 2{,}406\ ft^3 (Equation\ 1)$

$V_F = A_{room} \times \rho_{sprinkler} \times T \times 1.1\ (Equation\ 6)$

$A_{room} = 924\ ft^2$ (Assumption A-3.4)

$V_F\ (gal) = 924\ ft^2 \times 0.17\ gal/min/ft^2 \times 20\ min \times 1.1 = 3{,}455.76\ gal$

$V_F(ft^3) = 3{,}455.76\ gal \times 0.13368 \frac{ft^3}{gal} \cong 462\ ft^3 (Equation\ 1)$

Therefore,

$V_T(ft^3) = 2{,}406 ft^3 + 462 ft^3 = 2{,}868 ft^3$

$V_T(gal) = 18{,}000\ gal + 3455.76\ gal \cong 21{,}456\ gal$

The required liner height for the room is calculated using the following equation:

$$H_L = \text{Required Liner Height} = \frac{V_T}{A_{net}} + 1\ ft \text{ (Equation 9)}$$

The net room area (A_{net}) is the combined footprint from the non-failed vessels in the room subtracted from the room area. There are no other vessels in the Low Point Drain Vessel Area.

$A_{net} = A_{room} - \sum A_{vessel}\ (non - failed)$ (Equation 5)

$\sum A_{vessel}\ (non - failed) = 0\ ft^2$ (Equation 2)

$A_{net} = 924\ ft^2 - 0\ ft^2 = 924\ ft^2$

Therefore,

$$H_L = \frac{2{,}868 ft^3}{924 ft^2} + 1\ ft = 4.10 ft \cong 4\ ft\ 2\ inches\ (rounded\ up\ to\ the\ next\ inch)$$

A-5.2 **Required Liner Height for Evaporator Feed Vessel Area, Room E-0105, Elevation 0 ft**

Scenario: Leakage and spillage of the single largest vessel in area, Evaporator Feed Vessel (DEP-VSL-00002) (Assumption A-3.6) and accumulation of rainfall (Assumption A-3.11). No accumulation of fire water from automatic fire suppression system discharge (Assumption A-3.5).

The total vessel volume is compared to 110% of the maximum operating volume of the vessel to determine the controlling volume:

$Total\ Vessel\ Volume = 42{,}300\ gal$ (Assumption A-3.6)
$110\%\ Maximum\ Operating\ Volume = 1.10 \times\ 38{,}000\ gal = 41{,}800\ gal$ (Assumption A-3.6)
$42{,}300\ gal > 41{,}800\ gal$ ∴ Total Vessel Volume is the Controlling Volume

The total accumulated liquid volume for the Evaporator Feed Vessel area is calculated using the following equation:

$$V_T = V_V + V_R (Equation\ 8)$$

Where

$V_V(gal) = Controlling\ Volume =\ 42{,}300\ gal\ (Total\ Vessel\ Volume)$ (Assumption A-3.6)

$$V_V(ft^3) = 42{,}300 gal \times 0.13368 \frac{ft^3}{gal} \cong 5{,}655\ ft^3 (Equation\ 1)$$

V_R = Volume of Rainfall = $A_{room} \times \left(H_r \times \frac{1\ ft}{12\ in}\right)$ (Equation 7)

$A_{room} = 1{,}774\ ft^2$ (Assumption A-3.4)

$$V_R(ft^3) = 1{,}774\ ft^2 \times \left(1.56\ in\ \times \frac{1 ft}{12 in}\right) \cong 231\ ft^3$$

$$V_R\ (gal) = 231\ ft^3 \times \frac{1\ gal}{0.13368\ ft^3} \cong 1{,}728\ gal\ (Equation\ 1)$$

Therefore,

$$V_T(ft^3) = 5{,}655\ ft^3 + 231\ ft^3 = 5{,}886\ ft^3$$

$$V_T\ (gal) = 42{,}300\ gal + 1{,}728\ gal = 44{,}028\ gal$$

The required liner height for the room is calculated using the following equation:

$$H_L = \text{Required Liner Height} = \frac{V_T}{A_{net}} + 1\ ft \text{ (Equation 9)}$$

The net room area (A_{net}) is the combined footprint from the non-failed vessels in the room subtracted from the room area. The non-failed vessels are all three Evaporator Concentrate Vessels (DEP-VSL-00003A/B/C).

$$A_{net} = A_{room} - \sum A_{vessel}\,(non - failed) \qquad \text{(Equation 5)}$$

$$\sum A_{vessel}\,(non - failed) = 3\left(\frac{\pi d_{conc}^2}{4}\right) \text{ (Equation 2)}$$

d_{conc}= Diameter of Concentrate Vessel = 12 ft 1 in (Assumption A-3.6)

$$\sum A_{vessel}\,(non - failed) = 3\left(\frac{\pi\left[12\ ft + \left(1\ in \times \frac{1ft}{12in}\right)\right]^2}{4}\right) = 344\ ft^2$$

$$A_{net} = 1{,}774\ ft^2 - 344\ ft^2 = 1{,}430\ ft^2$$

Therefore,

$$H_L = \frac{5{,}886 ft^3}{1{,}430 ft^2} + 1ft = 5.12ft \cong 5\ ft\ 2\ inches\ (rounded\ up\ to\ the\ next\ inch)$$

A-5.3 Required Liner Height for Process Condensate Lag Storage Vessel Area, Room E-0106, Elevation 0 ft

Scenario: Leakage and spillage of the single largest vessel in the area, one of the Process Condensate Lag Storage Vessels (DEP-VSL-00005A/B) and accumulation of rainfall (Assumption A-3.11). No accumulation of fire water from automatic fire suppression system discharge (Assumption A-3.5).

The total vessel volume is compared to 110% of the maximum operating volume of the vessel to determine the controlling volume:

$$Total\ Vessel\ Volume = 127{,}260\ gal \text{ (Assumption A-3.6)}$$
$$110\%\ Maximum\ Operating\ Volume = 1.10 \times 111{,}761\ gal = 122{,}937\ gal \text{ (Assumption A-3.6)}$$
$$127{,}260\ gal > 122{,}937\ gal\ \therefore \text{ Total Vessel Volume is the Controlling Volume}$$

The total accumulated liquid volume for the Process Condensate Lag Storage Vessel Area is calculated using the following equation:

$$V_T = V_V + V_R (Equation\ 8)$$

Where

$$V_V(gal) = Controlling\ Volume = 127{,}260\ gal\ (Total\ Vessel\ Volume) \text{ (Assumption A-3.6)}$$

$$V_V(ft^3) = 127{,}260\ gal \times 0.13368 \frac{ft^3}{gal} \cong 17{,}012\ ft^3 (Equation\ 1)$$

V_R (ft^3) = Volume of Rainfall = $A_{room} \times \left(H_r \times \frac{1\ ft}{12\ in}\right)$ (Equation 7)

$A_{room} = 3{,}837\ ft^2$ (Assumption A-3.4)

$$V_R(ft^3) = 3{,}837\ ft^2 \times \left(1.56\ in\ \times \frac{1ft}{12in}\right) \cong 499\ ft^3$$

$$V_R\ (gal) = 499\ ft^3 \times \frac{1\ gal}{0.13368\ ft^3} \cong 3733\ gal\ (Equation\ 1)$$

Therefore,

$$V_T(ft^3) = 17{,}012\ ft^3 + 499\ ft^3 = 17{,}511\ ft^3$$

$$V_T\ (gal) = 127{,}260\ gal + 3{,}733\ gal = 130{,}993\ gal$$

The required liner height for the room is calculated using the following equation:

H_L (ft) = Required Liner Height = $\frac{V_T}{A_{net}}$ + 1 ft (Equation 9)

The net room area (A_{net}) is the combined footprint from the non-failed vessels in the room subtracted from the room area. The non-failed vessels are one of the Process Condensate Lag Storage Vessel (DEP-VSL-00005A/B) and both of the Overhead Sampling Vessels (DEP-VSL-00004A/B).

$$A_{net} = A_{room} - \sum A_{vessel}\ (non - failed) \qquad \text{(Equation 5)}$$

$$\sum A_{vessel}\ (non - failed) = \left(\frac{\pi d_{lag}^2}{4}\right) + 2\left(\frac{\pi d_{overhead}^2}{4}\right) \qquad \text{(Equation 2)}$$

d_{lag} = Diameter of Lag Storage Vessel = 25 ft 1 in (Assumption A-3.6)

$d_{overhead}$ = Diameter of Overhead Sampling Vessel = 14 ft 1 in (Assumption A-3.6)

$$\sum A_{vessel}\ (non - failed) = \left(\frac{\pi\left(\left[25ft + \left(1\ in \times \frac{1ft}{12in}\right)\right]^2\right)}{4}\right) + 2\left(\frac{\pi\left[14ft + \left(1\ in \times \frac{1ft}{12in}\right)\right]^2}{4}\right) = 806\ ft^2$$

$$A_{net} = 3{,}837\ ft^2 - 806\ ft^2 = 3{,}031\ ft^2$$

Therefore,

$$H_L = \frac{17{,}511 ft^3}{3{,}031 ft^2} + 1ft = 6.78\ ft \cong 6\ ft\ 10\ inch\ (rounded\ up\ to\ the\ next\ inch)$$

A-5.4 Required Liner Heights for the West (E-0103) and East (E-0102) Evaporator Process Areas, Elevation 0 ft

Two scenarios are evaluated for West and East Evaporator Process Areas to determine the most conservative liner heights.

A-5.4.1 Scenario One for West Evaporator Process Area (E-0103)

Scenario: Leakage and spillage of the full volume of the single largest vessel with pump suction line in the area, Evaporator Feed Vessel (DEP-VSL-00002), into the West Evaporator Process Area as a result of an Evaporator Feed Pump suction line failure and accumulation of fire water from automatic fire suppression system discharge (Assumption A-3.5). No accumulation from rainfall (Assumption A-3.11).

The total vessel volume is compared to 110% of the maximum operating volume of the vessel to determine the controlling volume:

$$Total\ Vessel\ Volume = 42{,}300\ gal \text{ (Assumption A-3.6)}$$
$$110\%\ Maximum\ Operating\ Volume = 1.10 \times\ 38{,}000\ gal = 41{,}800\ gal \text{ (Assumption A-3.6)}$$
$$42{,}300\ gal > 41{,}800\ gal\ \therefore \text{ Total Vessel Volume is the Controlling Volume}$$

The total accumulated liquid volume for the West Evaporator Process Area is calculated using the following equation:

$$V_T = V_V + V_F (Equation\ 8)$$

Where

$$V_V(gal) = Controlling\ Volume =\ 42{,}300\ gal\ (Total\ Vessel\ Volume) \text{ (Assumption A-3.6)}$$

$$V_V(ft^3) = 42{,}300\ gal \times 0.13368 \frac{ft^3}{gal} \cong 5{,}655\ ft^3 (Equation\ 1)$$

$$V_F = A_{room} \times \rho_{sprinkler} \times T \times 1.1\ (Equation\ 6)$$

$$A_{room} = 3{,}503\ ft^2 \qquad \text{(Assumption A-3.4)}$$

$$V_F(gal) = 3{,}503\ ft^2 \times 0.17 gal/min/ft^2 \times 20\ min \times 1.1 = 13101.22 gal$$
$$V_F(ft^3) = 13{,}101.22\ gal \times 0.13368 \frac{ft^3}{gal} \cong 1{,}751\ ft^3 (Equation\ 1)$$

Therefore,

$$V_T(ft^3) = 5{,}655 ft^3 + 1{,}751 ft^3 = 7{,}406\ ft^3$$

$$V_T(gal) = 42{,}300\ gal + 13{,}101.22\ gal \cong 55{,}401\ gal$$

The required liner height for the room is calculated using the following equation:

$$H_L = \text{Required Liner Height} = \frac{V_T}{A_{net}} + 1\ \text{ft} \qquad \text{(Equation 9)}$$

The net room area (A_{net}) is the combined footprint from the non-failed vessels in the room subtracted from the room area. The non-failed vessels are the Evaporator (DEP-EVAP-00001), the Evaporator Reboiler (DEP-RBLR-00001), and the Evaporator Concentrate/Feed LAW Effluent Cooler (DEP-HX-00001).

$$A_{net} = A_{room} - \sum A_{vessel}\,(non - failed) \qquad \text{(Equation 5)}$$

$$\sum A_{vessel}\,(non - failed) = A_{EVAP} + A_{RBLR} + A_{HX}$$
$$= 79ft^2 + 24ft^2 + 7ft^2 = 110ft^2 \text{ (Assumption A-3.7)}$$

$A_{net} = 3{,}503\ ft^2 - 110\ ft^2 = 3{,}393\ ft^2$

Therefore,

$$H_L = \frac{7{,}406ft^3}{3{,}393ft^2} + 1\ ft = 3.18ft \cong 3\ ft\ 3\ inches\ (rounded\ up\ to\ the\ next\ inch)$$

A-5.4.2 Scenario One for East Evaporator Process Area (E-0102)

Scenario: Leakage and spillage of the full volume of the single largest vessel with a pump suction line in the area, one of the Process Condensate Lag Storage Vessels (DEP-VSL-00005A/B), into the East Evaporator Process Area as a result of a Process Condensate Lag Storage Vessel pump suction line failure and accumulation of fire water from automatic fire suppression system discharge (Assumption A-3.5). No accumulation from rainfall (Assumption A-3.11).

The total vessel volume is compared to 110% of the maximum operating volume of the vessel to determine the controlling volume:

$$Total\ Vessel\ Volume = 127{,}260\ gal \text{ (Assumption A-3.6)}$$
$$110\%\ Maximum\ Operating\ Volume = 1.10 \times\ 111{,}761\ gal = 122{,}937\ gal \text{ (Assumption A-3.6)}$$
$$127{,}260\ gal > 122{,}937\ gal\ \therefore \text{ Total Vessel Volume is the Controlling Volume}$$

The total accumulated liquid volume for the East Evaporator Process Area is calculated below:

$$V_T = V_V + V_F (Equation\ 8)$$

Where

$$V_V(gal) = Controlling\ Volume =\ 127{,}260\ gal\ (Total\ Vessel\ Volume) \text{ (Assumption A-3.6)}$$
$$V_V(ft^3) = 127{,}260\ gal \times 0.13368\frac{ft^3}{gal} \cong 17{,}012\ ft^3 (Equation\ 1)$$

$$V_F = A_{room} \times \rho_{sprinkler} \times T \times 1.1 \ (Equation\ 6)$$

$$A_{room} = 5{,}859\ ft^2 \text{ (Assumption A-3.4)}$$

$$V_F(gal) = 5{,}859\ ft^2 \times 0.17 gal/min/ft^2 \times 20\ min \times 1.1 = 21{,}912.66\ gal$$
$$V_F(ft^3) = 21{,}912.66\ gal \times 0.13368\ \frac{ft^3}{gal} \cong 2{,}929\ ft^3 (Equation\ 1)$$

Therefore,

$$V_T(ft^3) = 17{,}012\ ft^3 + 2{,}929\ ft^3 = 19{,}941\ ft^3$$

$$V_T(gal) = 127{,}260\ gal + 21{,}912.66\ gal \cong 149{,}173\ gal$$

The required liner height for the room is calculated using the following equation:

$$H_L = \text{Required Liner Height} = \frac{V_T}{A_{net}} + 1\ ft \text{ (Equation 9)}$$

The net room area (A_{net}) is the combined footprint from the non-failed vessels in the room subtracted from the room area. The non-failed vessels are the Steam Condensate Water Blowdown Vessel (SCW-VSL-00054), Reboiler Condensate Collection Vessel (DEP-VSL-00008), and Evaporator Condensers (DEP-COND-00001/2/3).

$$A_{net} = A_{room} - \sum A_{vessel}\ (non - failed) \qquad \text{(Equation 5)}$$

$$\sum A_{vessel}\ (non - failed) = A_{SCW} + A_{VSL8} + A_{COND1} + A_{COND2} + A_{COND3}$$
$$= 13\ \text{ft}^2 + 13\ \text{ft}^2 + 84\ \text{ft}^2 + 16\ \text{ft}^2 + 6\ \text{ft}^2 = 132\ \text{ft}^2$$
(Assumption A-3.7)

$A_{net} = 5{,}859\ \text{ft}^2 - 132\ \text{ft}^2 = 5{,}727\ \text{ft}^2$

Therefore,

$$H_L = \frac{19{,}941 ft^3}{5{,}727 ft^2} + 1\ ft = 4.48\ ft \cong 4\ ft\ 6\ inches\ (rounded\ up\ to\ the\ next\ inch)$$

A-5.4.3 Scenario Two for West and East Evaporator Process Areas

Scenario: The full volume of the single largest vessel with a pump suction in either Evaporator Process Areas, one of the Process Condensate Lag Storage Vessels (DEP-VSL-00005A/B) normalizing between the combined process areas. Additionally, fire water from automatic fire suppression system discharge is accumulated (Assumption A-3.5). No accumulation of rainfall (Assumption A-3.11)

The total accumulated liquid volume for the West and East evaporator process areas is calculated using the following equation:

$$V_T = V_V + V_F \ (Equation\ 8)$$

Where

$V_V(gal) = Controlling\ Volume = \ 127{,}260\ gal\ (Total\ Vessel\ Volume)$(Assumption A-3.6)

$V_V(ft^3) = 127{,}260\ gal \times 0.13368\ \frac{ft^3}{gal} \cong 17{,}012\ ft^3 (Equation\ 1)$

$V_F = A_{room} \times \rho_{sprinkler} \times T \times 1.1\ (Equation\ 6)$

$A_{room} = (3{,}503\ ft^2 + 5{,}859\ ft^2) = 9{,}362 ft^2$ (Assumption A-3.4)

$V_F(gal) = 9{,}362\ ft^2 \times 0.17\ gal/min/ft^2 \times 20\ min \times 1.1 = 35{,}013.88\ gal$

$V_F(ft^3) = 35{,}013.88\ gal \times 0.13368 \frac{ft^3}{gal} \cong 4{,}681 ft^3 (Equation\ 1)$

Therefore,

$V_T(ft^3) = 17{,}012\ ft^3 + 4{,}681\ ft^3 = 21{,}693\ ft^3$

$V_T(gal) = 127{,}260\ gal + 35{,}013.88\ gal \cong 162{,}274\ gal$

The required liner height for the room is calculated using the following equation:

$$H_L = \text{Required Liner Height} = \frac{V_T}{A_{net}} + 1ft \ \text{(Equation 9)}$$

The net room area (A_{net}) is the combined footprint from the non-failed vessels in the room subtracted from the room area. The non-failed vessels are the Evaporator Separator (DEP-EVAP-00001), Evaporator Reboiler (DEP-RBLR-00001), Evaporator Concentrate/Feed LAW Effluent Cooler (DEP-HX-00001), Steam Condensate Water Blowdown Vessel (SCW-VSL-00054), Reboiler Condensate Collection Vessel (DEP-VSL-00008), and Evaporator Condensers (DEP-COND-00001/2/3).

$$A_{net} = A_{room} - \sum A_{vessel}\ (non - failed) \qquad \text{(Equation 5)}$$

$$\sum A_{vessel}(non - failed) = A_{EVAP} + A_{RBLR} + A_{HX} + A_{SCW} + A_{VSL8} + A_{COND1} + A_{COND2} + A_{COND3}$$

$$\sum A_{vessel}(non - failed) = 79ft^2 + 24ft^2 + 7ft^2 + 13\text{ft}^2 + 13\text{ft}^2 + 84\text{ft}^2 + 16\text{ft}^2 + 6\text{ft}^2 = 242\ ft^2 \text{ (Assumption A-3.7)}$$

A_{net} = 9,362 ft^2 – 242 ft^2 = 9120 ft^2

Therefore,

$$H_L = \frac{21{,}693 ft^3}{9{,}120 ft^2} + 1ft = 3.38\ ft \cong 3\ ft\ 5\ inches\ (rounded\ up\ to\ the\ next\ inch)$$

The required liner height for this scenario is greater than the required liner height calculated in Scenario 1 for the West Evaporator Process Area, but smaller than the required liner height calculated in Scenario 1 for the East Evaporator Process Area. Therefore, 3 ft 5 inches will be the required liner height for the West Evaporator Process Area and 4 ft 6 inches will be the required liner height for the East Evaporator Process Area.

A-5.5 Calculation Summary

Calculation Section Number	Elevation (ft)	Containment Area Room Number	Area of Room (ft^2)	Area of Non-Failed Vessels (ft^2)	Net Room Area (ft^2)	Total Volume of Largest Vessel (gal)	Total Volume of Largest Vessel (ft^3)	Fire Water Volume (gal)	Fire Water Volume (ft^3)	Rainfall Volume (gal)	Rainfall Volume (ft^3)	Total Accumulated Liquid Volume (gal)	Total Accumulated Liquid Volume (ft^3)	Required Liner Height (ft)
A-5.1	-39	ED-B001 (Low Point Drain Vessel Area)	924	0	924	18,000	2,406	3,456	462	Not Applicable. Rainfall is not accumulated in indoor areas.		21,456	2,868	4 ft 2 in
A-5.2	0	E-0105 (Evaporator Feed Vessel Area)	1,774	344	1,430	42,300	5,655	Not Applicable. Fire water is not accumulated in outdoor areas.		1,728	231	44,028	5,886	5 ft 2 in
A-5.3	0	E-0106 (Process Condensate Lag Storage Vessel Area)	3,837	806	3,031	127,260	17,012			3,733	499	130,993	17,511	6 ft 10 in
A-5.4.1	0	E-0103 (West Evaporator Process Area) Scenario 1	3,503	110	3,393	42,300	5,655	13,101	1,751	Not Applicable. Rainfall is not accumulated in indoor areas.		55,401	7,406	3 ft 3 in
A-5.4.2	0	E-0102 (East Evaporator Process Area) Scenario 1	5,859	132	5,727	127,260	17,012	21,913	2,929			149,173	19,941	4 ft 6 in
A-5.4.3	0	E-0102/E-0103 (West & East Evaporator Process Area) Scenario 2	9,362	242	9,120	127,260	17,012	35,014	4,681			162,274	21,693	3 ft 5 in

A-6 References

A-6.1 24590-BOF-P1-25-00001, Rev. 0, Balance of Facilities LAW Effluent Process Bldg & LAW Effluent Drain Tank Bldg General Arrangement Plan at Elev. 0'-0".

A-6.2 24590-WTP-DB-ENG-01-001, Rev. 3, Basis of Design

A-6.3 24590-BOF-M0C-DEP-00001, Rev. B, Liner Height Calculation in the EMF

A-6.4 PNL-4622 UC-11, June 1983, Climatological Summary for the Hanford Area

A-6.5 24590-BOF-A5-25-05200001, Rev. 0, LAW Effluent Process Bldg 25 & Drain Tank Bldg 25A Architectural Room Finish Schedule

A-6.6 24590-WTP-GPG-M-033, Rev. 4, Fire Water Floor Drain System