START

0006147 132

SUPPORTING DOCUMENT

1. Page 1 of 115

2. Title	3. Number	4. Rev. No.
Recommendations for the Sampling and Decommissioning of Tank 241-CX-72	WHC-SD- DD-ES-008	0

5. Key Words
241-CX-72, Decommissioning, Waste Retrieval, Strontium Semiworks, Transuranic Waste

6. Author
J. D. Ludowise
Name (Type or Print)
J. D. Ludowise 9-6-89
Signature
W23170
Organization Code

7. Abstract
Presently, there is strong evidence supporting the conclusion that the contents of Tank 241-CX-72 can be considered transuranic waste and should be retrieved. The retrieval of the waste from Tank 241-CX-72 is feasible using existing technology and methods. The sampling and decommissioning of the tank will be accomplished in three phases. Initial characterization of the tank and removal of the grout layer will be accomplished during Phase 1. During Phase 2, the transuranic sludge in the bottom of the tank will be sampled and analyzed and the process for retrieval of this material will be designed. During Phase 3, the transuranic sludge material will be retrieved and the tank will be stabilized for future closure under CERCLA or RCRA rules. The total cost for completing all three phases is estimated to be between $1.4 and $1.8 million, depending on the complexity of the Phase 3 process. The decommissioning project will require at least 2 years and 9 months complete.

This sequence of events is somewhat flexible in that it may be feasible to obtain a sample of the sludge layer prior to initiation of grout retrieval. The slight increase in cost for having to sample through the grout layer (approximately $80,000) would be offset by a reduction in the length of the project (approximately 10 months). There would be some programmatic risk involved in using the currently available samplers which would probably not retrieve a representative sample. A new sampler, designed specifically for sampling the hard cake contained in Single Shell Tanks, should be suitable for retrieving a sample of the sludge material in Tank 241-CX-72. However, this sampler will not be available until at least January of 1990, and may not be perfected for up to another 6 months.

8. **PURPOSE AND USE OF DOCUMENT** - This document was prepared for use within Westinghouse Hanford Company and is to be used only to perform, direct, or integrate work under U.S. Department of Energy contracts. Distribution external to WHC requires the appropriate document clearance.

PATENT STATUS - This document copy, since it is transmitted in advance of patent clearance, is made available in confidence solely for use in performance of work under contracts with the U.S. Department of Energy. This document is not to be published nor its contents otherwise disseminated or used for purposes other than specified above before patent approval for such release or use has been secured, upon request, from the U.S. Department of Energy, Patent Attorney, Richland Operations Office, Richland, WA.

9. **ENGINEERING RELEASE STAMP**
(Does not authorize public dissemination)

OFFICIAL RELEASE BY WHC 48
DATE SEP 7 1989
Station #4

DEC 1989 RECEIVED EDMC

10. Impact Level
4

A-6400-073 (6/89)

9111890609

SUPPORTING DOCUMENT COVER SHEET COMPLETION INSTRUCTIONS

1. PAGE 1 OF _____ – Enter total page count.

2. TITLE – Enter the title of the Supporting Document to be released.

3. NUMBER – Enter the unique document identification number obtained from Engineering Document Control.

4. REV. NO. – Enter the current revision number of the Supporting Document to be released.

5. KEY WORDS – Enter specific words that are input to a database that will aid in future retrieval of the document, e.g., project, task, selected words from the title, etc.

6. AUTHOR – Enter the printed/typed name of the Supporting Document author, his signature, and the author's organization code.

7. ABSTRACT – Enter a brief summary of the document content.

8. CAVEATS – Reminders to the user(s) and those on distribution that the Supporting Document is not approved for public release until proper reviews/approvals have been obtained.

9. ENGINEERING RELEASE STAMP – The release stamp is affixed by Engineering Document Control to certify that the Supporting Document is approved for the intended use, and is accountable and retrievable. The release stamp is not an authorization for public release and does not signify that the document is approved for public dissemination.

10. IMPACT LEVEL – Enter the applicable Impact Level for the Supporting Document. Reference MRP 5.43 and EP-1.7.

9111370609

EDMC RECEIVED DEC 1993

ENGINEERING STUDY

RECOMMENDATIONS FOR THE SAMPLING AND DECOMMISSIONING OF TANK 241-CX-72

T. E. Griffin
and
J. D. Ludowise

Engineering Services Group

September 6, 1989

9111374061 0

THIS PAGE INTENTIONALLY
LEFT BLANK

TABLE OF CONTENTS

LIST OF FIGURES 6

LIST OF TABLES 7

ABBREVIATIONS 8

1.0 OBJECTIVE 9
1.1 BACKGROUND AND SCOPE 9
1.1.1 Background 9
1.1.2 Scope 9
1.2 PURPOSE AND NEED 10

2.0 SUMMARY 10

3.0 RECOMMENDATIONS AND CONCLUSIONS 11

4.0 METHODOLOGY 13
4.1 CRITERIA 13
4.2 TANK AND WASTE CHARACTERIZATION 14
4.2.1 Historical Background 14
4.2.2 Characterization of the Tank Vessel 18
4.2.3 Characterization of the Tank Contents 18
4.2.4 Assumptions 20
4.2.5 Uncertainties 20
4.3 SELECTION OF THE PREFERRED OPTION 21

5.0 RECOMMENDED SAMPLING AND DECOMMISSIONING METHOD 27
5.1 GENERAL DESCRIPTION 27
5.1.1 Preferred Grout Retrieval Method - Auger/Airlift 30
5.1.2 Grout Sampling 33
5.1.3 Sludge Sampling 33
5.1.3.1 Criteria for Sludge Sampling 33
5.1.3.2 Recommended Method for Sludge Sampling 33
5.1.4 Sludge Retrieval Methods 36
5.1.4.1 Dry Retrieval of Sludge 36
5.1.4.2 Wet Retrieval of Sludge 36
5.1.4.3 Tank Removal 36
5.2 ASSESSMENT OF REGULATORY AND ENVIRONMENTAL CONSTRAINTS 46
5.3 ASSESSMENT OF PRINCIPAL HAZARDS AND RISKS 47
5.4 COST ESTIMATE AND SCHEDULE 50
5.5 REASONS FOR SELECTION 56

6.0 ALTERNATIVE SAMPLING AND DECOMMISSIONING METHODS 56
6.1 ALTERNATIVE DECOMMISSIONING METHODS - GENERAL DESCRIPTIONS . . 56
6.1.1 Alternative A - Mine Entire Contents (Dry Process) . . 56
6.1.1.1 Description 56
6.1.1.2 Assessment of Regulatory and Environmental Impacts . 59
6.1.1.3 Assessment of Principal Hazards and Risks 59
6.1.1.4 Cost Estimate 59
6.1.1.5 Reason for Dismissal 59
6.1.2 Alternative B - Leave Grout in Place, Sluice Sludge . . 60
6.1.2.1 Description 60
6.1.2.2 Assessment of Regulatory and Environmental Impacts . 60

9 1 1 1 3 9 4 0 6 1 1

6.1.2.3 Assessment of Principal Hazards and Risks 60
6.1.2.4 Cost Estimate 63
6.1.2.5 Reason for Dismissal 63
6.1.3 Alternative C - Leave Grout in Place, Mine Sludge . . . 63
6.1.3.1 Description 63
6.1.3.2 Assessment of Regulatory and Environmental Impacts . 63
6.1.3.3 Assessment of Principal Hazards and Risks 66
6.1.3.4 Cost Estimate 66
6.1.3.5 Reason for Dismissal 66
6.1.4 Alternative D - Sluice Entire Contents (Wet Process) . . 66
6.1.4.1 Description 66
6.1.4.2 Assessment of Regulatory and Environmental Impacts . 66
6.1.4.3 Assessment of Principal Hazards and Risks 69
6.1.4.4 Cost Estimate 69
6.1.4.5 Reason for Dismissal 69
6.1.5 Alternative E - No Action 69
6.1.5.1 Description 69
6.1.5.2 Assessment of Regulatory and Environmental Impacts . 69
6.1.5.3 Assessment of Principal Hazards and Risks 69
6.1.5.4 Cost Estimate 69
6.1.5.5 Reason for Dismissal 69
6.2 ALTERNATIVE GROUT RETRIEVAL METHODS 69
6.2.1 Encased Auger/Airlift 70
6.2.2 Mechanical Clamshell/Scoop 70
6.2.3 Mobile Vacuum System 72
6.3 ALTERNATIVE SLUDGE SAMPLING METHODS 72

7.0 REFERENCES 75

8.0 APPENDICES 77

APPENDIX A - DRAWINGS 78

APPENDIX B - REFERENCED INTERNAL LETTERS 89

APPENDIX C - DETAILS OF COST ESTIMATES 98

C.0 DETAILS OF COST ESTIMATES 99
C.1 SLUDGE SAMPLING 99
C.1.1 Sample Sludge After Grout Removal 99
C.1.2 Sample Sludge Before Grout Removal 99
C.2 DECOMMISSIONING COST ESTIMATES 100
C.2.1 Recommended Decommissioning Method - Mine Grout/Characterize Sludge (Figure 5-1) 100
C.2.2 Alternative Decommissioning - Method A Mine Entire Contents (Dry Process, Figure 6-1) 105
C.2.3 Alternative Decommissioning - Method B Leave Grout in Place, Sluice Sludge Out (Figure 6-2) 107
C.2.4 Alternative Decommissioning - Method C Leave Grout in Place, Mine Sludge Out (Figure 6-3) 109
C.2.5 Alternative Decommissioning - Method D Sluice Entire Contents (Wet Process, Figure 6-4) 111

APPENDIX D - OTHER ALTERNATIVES CONSIDERED BUT NOT DEVELOPED 113

LIST OF FIGURES

Figure 4-1. Plan of 200-E Area Showing the Location of Tank 241-CX-72 . 15
Figure 4-2. Simplified Cross Sectional View of Tank 241-CX-72 16
Figure 4-3. General Logic Diagram for Selection of the Preferred Method . 22
Figure 4-4. Logic Diagram Showing Available Options 28
Figure 5-1. Phase 1 of the Proposed Method of Sampling and Decommissioning of Tank 241-CX-72 29
Figure 5-2. Proposed Grout Removal Equipment 31
Figure 5-3. Expandable Balloon for Fracturing Sludge 37
Figure 5-4. Encased Auger for Sludge Retrieval 38
Figure 5-5, Sheet 1. Sluice in Place Option for Sludge Retrieval . . . 39
Figure 5-5, Sheet 2. Sluice in Place Option for Sludge Retrieval . . . 40
Figure 5-6. Process Schematic of the Sludge Sluicing System 41
Figure 5-7, Sheet 1. Sluicing Sludge by Lifting the Tank into a Shielded Area 42
Figure 5-7, Sheet 2. Sluicing Sludge by Lifting the Tank into a Shielded Area 43
Figure 5-8, Sheet 1. Transfer of Tank to T-Plant for Sludge Removal . . 44
Figure 5-8, Sheet 2. Transfer of Tank to T-Plant for Sludge Removal . . 45
Figure 5-9. Preliminary Schedule for the Sampling and Decommissioning of Tank 241-CX-72 52
Figure 5-10. Preliminary Schedule for the Sampling and Decommissioning of Tank 241-CX-72, with Early Sludge Characterization 54
Figure 6-1, Sheet 1. Alternative A - Mine Entire Contents (Dry Process). . 57
Figure 6-1, Sheet 2. Alternative A - Mine Entire Contents (Dry Process) . 58
Figure 6-2, Sheet 1. Alternative B - Leave Grout in Place, STuice Sludge 61
Figure 6-2, Sheet 2. Alternative B - Leave Grout in Place, Sluice Sludge 62
Figure 6-3, Sheet 1. Alternative C - Leave Grout in Place, Mine Sludge . 64
Figure 6-3, Sheet 2. Alternative C - Leave Grout in Place, Mine Sludge . 65
Figure 6-4, Sheet 1. Alternative D - Sluice Entire Contents (Wet Process) 67
Figure 6-4, Sheet 2. Alternative D - Sluice Entire Contents (Wet Process) 68
Figure 6-5. Removal of Grout Layer Using a Clamshell Device 71
Figure 6-6. Mobile Vacuum System 73
Drawing H-2-2554 79
Drawing H-2-2563 80
Drawing H-2-4422 81
Drawing H-2-4423 82
Drawing H-2-91497 83
Drawing H-2-91498 84
Drawing H-2-91685 85
Drawing H-2-95501 86
Drawing H-2-99316, Sheet 1 87
Drawing H-2-99316, Sheet 2 88

9 1 1 1 8 9 4 0 6 1 3

LIST OF TABLES

Table 2-1. Summary of Options for Decommissioning Tank 241-CX-72 . . . 12
Table 5-1. Facility Hazard Classification Criteria 49
Table 5-2. Expense Support Costs for Sampling and Decommissioning of Tank 51
Table 5-3. Yearly Funding Levels Assuming Optimistic Schedule and FY 1991 Sludge Sampling. 53
Table 5-4. Yearly Funding Levels Assuming Optimistic Schedule and FY 1990 Sludge Sampling 55

9 1 1 1 3 7 4 0 6 1 4

ABBREVIATIONS

ALARA	- As Low as Reasonably Achievable
ASTM	- (formerly American Society for Testing and Materials, now ASTM)
CERCLA	- Comprehensive Environmental Response, Compensation, and Liability Act
CFM	- Cubic Feet per Minute
CFR	- Code of Federal Regulations
DOE	- United States Department of Energy
EDE	- Effective Dose Equivalent
EIS	- Environmental Impact Statement
EPA	- United States Environmental Protection Agency
g	- Gram
gal	- Gallon
gpm	- Gallons per Minute
GTCC	- Greater Than Class C
HDW	- Hanford Defense Waste
HEPA	- High Efficiency Particulate Air (filter)
HLW	- High Level Waste
hr	- Hour
KEH	- Kaiser Engineers Hanford
LLW	- Low Level Waste
MVS	- Mobile Vacuum System
nCi	- Nanocuries
NPH	- Normal Paraffin Hydrocarbon
psi	- Pounds per Square Inch
PUREX	- Plutonium and Uranium Recovery by Extraction
R	- Roentgen
RCRA	- Resource Conservation and Recovery Act
Rem	- Roentgen-equivalent-man
RI/FS	- Remedial Investigation/Feasibility Study
ROD	- Record of Decision
RPT	- Radiation Protection Technologist
SAD	- Safety Analysis Document
SAR	- Safety Analysis Report
SARP	- Safety Analysis Report for Packaging
SST	- Single-Shelled Tank
STEL	- Short Term Exposure Limit
SWMU	- Solid Waste Management Unit
TLV	- Threshold Limit Value
TRU	- Transuranic
TWA	- Time-Weighted Average
WDOE	- Washington State Department of Ecology
WHC	- Westinghouse Hanford Company

THIS PAGE INTENTIONALLY LEFT BLANK

9 1 1 1 3 9 4 0 6 1 5

THIS PAGE INTENTIONALLY
LEFT BLANK

ENGINEERING STUDY

RECOMMENDATIONS FOR THE SAMPLING
AND DECOMMISSIONING OF
TANK 241-CX-72

1.0 OBJECTIVE

1.1 BACKGROUND AND SCOPE

1.1.1 Background

In 1986, as part of the efforts associated with decommissioning the Strontium Semiworks Facility located in the 200-E Area, Tank 241-CX-72 was filled with grout to eliminate voids in the eventual entombment of the facility. In October of 1988, an actuator rod was discovered to have been accidentally pulled approximately 15 feet out of the tank by a piece of heavy equipment. The agitator rod was found to be contaminated and was subsequently buried as low level waste (LLW) along with some contaminated ash. A complete description of the contamination found is reported elsewhere[1]. Because the actuator rod contained appreciable levels of radioactive contamination, further analysis by nondestructive assay led to the conclusion that the tank may contain levels of transuranic (TRU) materials that could require its classification as transuranic waste. The decision was made to investigate the means to verify the existence of TRU material and the means to remove the tank contents if needed.

Prior to grouting the tank in 1986, a liquid level measurement indicated that the tank was empty. It is believed that this measurement erred either because it was made in the drywell, or the dryness of the sludge made it appear as if the tank was empty. Nevertheless, based on historical records that indicated that the tank was empty, and the results of the liquid level measurement, the tank was filled with grout.

1.1.2 Scope

This engineering study was commissioned to develop alternatives and recommend a preferred method for proceeding with sampling and decommissioning of Tank 241-CX-72. This study proposes several feasible sampling and decommissioning alternatives and includes, for each alternative:

1. Narrative and graphic descriptions.
2. Preferred sampling methods.
3. An assessment of regulatory and environmental impacts and constraints.
4. An assessment of principal hazards and risks.
5. Cost estimates.
6. Reasons for not selecting the non-preferred alternatives.

9 1 1 1 8 9 4 0 6 1 6

The description of the recommended alternative includes:

1. A narrative and graphic description of the method with a detailed outline for performing the work.
2. Preferred sampling methods.
3. An assessment of regulatory constraints with an emphasis on potential hold points.
4. An assessment of principal hazards and risks.
5. A Rough Order of Magnitude (ROM) cost estimate and a preliminary schedule.
6. A justification for selecting the recommendation.

1.2 PURPOSE AND NEED

Presently, there is evidence supporting the conclusion that the contents of Tank 241-CX-72 may be transuranic waste[2]. The Record of Decision (ROD) for the disposal of Hanford high-level, transuranic, and tank wastes[3] provides for the implementation of the "Preferred Alternative" as discussed in the Hanford Defense Waste-Environmental Impact Statement (HDW-EIS)[4]. This alternative provides for the disposal of the following defense wastes at the Hanford Site: Double-shell tank wastes; retrievably stored and newly generated transuranic waste; pre-1970 buried suspect TRU-contaminated solid waste outside of the central (200 Area) plateau; and strontium and cesium encapsulated wastes. For the remainder of the waste classes covered in the HDW-EIS [single-shell tank (SST) wastes, TRU-contaminated soil and pre-1970 buried suspect TRU-contaminated solid waste within the 200 Area plateau], the United States Department of Energy (DOE) has decided to conduct additional development and evaluation before making decisions on final disposal. This development and evaluation effort will focus both on methods to retrieve and process these wastes for disposal, as well as to stabilize and isolate the wastes near surface (within 30 meters of the surface).

Although Tank 241-CX-72 is not specifically addressed in the ROD, it is assumed that it falls under the category of single-shell tank wastes. This study is an evaluation of the alternatives that are available for the sampling and retrieval of the waste from Tank 241-CX-72.

2.0 SUMMARY

The sampling and retrieval of the waste from Tank 241-CX-72 is feasible using existing technology and methods. The sampling and decommissioning of the tank can be accomplished in three phases. Initial characterization of the tank and removal of the grout layer will be accomplished during Phase 1. During Phase 2, the suspected transuranic sludge in the bottom of the tank will be sampled and analyzed and the process for retrieval of this material will be designed. During Phase 3, if confirmed as being transuranic, the sludge material will be retrieved and the tank will be stabilized for future closure under Comprehensive Environmental Response, Compensation, and Liability Act (CERCLA) or Resource Conservation and Recovery Act (RCRA) guidelines.

The sequence of events described above is somewhat flexible in that it may be feasible to obtain a sample of the sludge layer prior to initiation of grout retrieval. The slight increase in cost for having to sample through the grout layer (approximately $80,000) would be offset by a reduction in the length of the project (approximately 10 months). There would be some programmatic risk involved in using the currently available samplers which would probably not retrieve a representative sample. A new sampler, designed specifically for sampling the hard cake contained in Single Shell Tanks, should be suitable for retrieving a sample of the sludge material in Tank 241-CX-72. However, this sampler will not be available until at least January of 1990, and may not be perfected for up to another 6 months.

The total cost for completing all three phases is estimated to be between $1.4 and $1.8 million, depending on the complexity of the Phase 3 process. The decommissioning project will require at least 2 years and 9 months complete.

Several alternatives to the preferred method were considered. These alternatives involved various combinations of mining and sluicing of the tank contents. Although each of these options was considered to be feasible to some degree, each was rejected because of the uncertainties surrounding the exact nature of the tank structure and its contents. Table 2-1 provides a brief summary of the options that were considered.

3.0 RECOMMENDATIONS AND CONCLUSIONS

The sampling and retrieval (if necessary) of the waste from Tank 241-CX-72 can be performed in three phases. The first phase will involve excavation to the top of the tank, removal of the top, and removal of most of the grout layer. The grout that is removed will be sampled and analyzed then packaged and disposed of in an appropriate and acceptable manner, depending on the nature (radionuclide and hazardous material content) of the grout. Upon removal of the grout, Phase 2 will begin and samples of the sludge layer will be obtained. At the same time, an inspection and analysis of the tank integrity will be conducted. These data will be evaluated in order to select the preferred retrieval method. The final retrieval will occur in Phase 3 and will involve at least one of the following three methods: mining; sluicing; and removal of the tank (with the sludge layer intact) to a handling facility. Because of uncertainties as to the nature (radiological, chemical, and physical properties) of the sludge layer and of the tank integrity, a final sludge retrieval method cannot be specified at the present time.

9 1 1 1 3 9 4 0 6 1 3

Table 2-1. Summary of Options for Decommissioning Tank 241-CX-72.

Alternative	TEC*, $ Million	Comments
Recommended Method -- Three phase approach: 1.) Remove grout; 2.) Sample and analyze sludge layer, design sludge retrieval process; 3.) Retrieve sludge.	1.396 to 1.832	Tank and sludge layer must be fully characterized before sludge retrieval is attempted. This approach features relatively inexpensive method to accomplish characterizations and provides flexibility in selecting final retrieval option.
Alternative A -- Mine Entire Contents (Dry Process)	1.552	Alternative rejected because of the unknown characteristics of the sludge layer. The sludge mining equipment would probably be over-designed in order to function properly.
Alternative B -- Leave Grout in Place, Sluice Sludge	1.146	Alternative rejected because of the unknown characteristics of the sludge layer and tank integrity. The physical characteristics of the sludge may make it difficult to sluice, and, if the tank has leaked, sluicing would be prohibited. Additionally, the grout layer is supported by the sludge layer. The grout layer probably would not remain in place if the sludge layer is removed.
Alternative C -- Leave Grout in Place, Mine Sludge	1.549	Alternative rejected because of the unknown characteristics of the grout layer. The grout layer is supported by the sludge layer. The grout layer probably would not remain in place if the sludge layer is removed.
Alternative D -- Sluice Entire Contents (Wet Process)	1.172	Alternative rejected primarily because of the uncertainty of tank integrity and characteristics of sludge layer. Large volume of low level waste would also be added to double shell tank inventory.
Alternative E -- No Action	--0--	This option would have no incremental impact on current budgets. This option would require that the sludge material, which is probably TRU, would remain in its present configuration, in a tank of unknown integrity, for an indefinite period.

* TEC - Total estimated cost includes engineering, construction, installation, operation, overhead charges, a 35% contingency, and support costs in FY 1989 dollars.

4.0 METHODOLOGY

4.1 CRITERIA

Several criteria were used in selecting candidate retrieval technologies. The primary criterion was to render the site of Tank 241-CX-72 such that it would meet the requirements of DOE Order 5820.2A[5]. Specifically, upon completion of the project, the site would contain only permissible concentrations of radionuclides and/or hazardous waste. In general, waste that contains greater than Class C (GTCC) concentrations of radionuclides, as defined in 10 Code of Federal Regulations (CFR) 61.55,[6] is generally not acceptable for near surface disposal. In particular, alpha emitting transuranic nuclides with half-lives greater than five years are limited to concentrations of less than 100 nCi/g. In addition, an environmental pathway analysis must demonstrate that all low-level waste that is disposed (i.e., in place disposal of some or all of the tank contents) has a dose delivered through all environmental pathways (i.e., inhalation, ingestion of food crops grown on contaminated soil, intrusion, etc.) that does not exceed 25 mrem/year for all pathways or 4 mrem/year through drinking the groundwater (whichever is lower). Disposal of any hazardous waste must meet the requirements of the United States Environmental Protection Agency (EPA) and the Washington State Department of Ecology (WDOE).

In order to consider leaving the sludge layer or grout layer in place, these layers must be shown to have concentrations that would be non-GTCC, and non-hazardous. If the sludge layer is to be removed from beneath the grout layer, the grout and tank must also be of sufficient strength to resist the forces involved.

Sampling and retrieval techniques must comply with criticality safety requirements of the DOE as set forth in the Nuclear Criticality Safety Manual[7]. The waste must be demonstrated to remain sub-critical under all circumstances. This requirement precludes the introduction of water (including water containing a soluble poison) into the tank until the sludge layer is fully characterized. Historical records and recently obtained radiation measurements are not sufficient to satisfy the requirement to characterize the waste with respect to fissionable material content. A single sample of fissionable material taken in the center of the tank would be representative for the size tank being sampled. This sample would satisfy criticality safety requirements, however, sampling for hazardous waste would require one additional sample.

Waste removal techniques involving water to sluice the sludge layer would require three additional criteria to be met: 1.) The sludge layer must be shown to have the physical and chemical characteristics necessary for successful sluicing; 2.) it must be verified that the tank has not leaked; and 3.) the tank walls must be shown to be of sufficient structural integrity to withstand the sluicing pressure needed to dislodge the waste material. If the sludge were to be sluiced from beneath the grout (which would be left in place), the grout must have sufficient structural integrity to remain in place.

9 1 1 1 3 7 4 0 6 9 0

If the tank, with the sludge layer intact, is to be removed from the caisson and moved to another facility for waste retrieval, the tank must be shown to be of sufficient structural integrity to withstand the stresses involved. Verification that the tank has not leaked would also be required.

Options to sample and remove the tank waste must comply with all policies and procedures of the Westinghouse Hanford Company (WHC). These requirements include, but are not limited to, criticality prevention, contamination control, and industrial safety. In addition, retrieval options must be in full, compliance with all applicable DOE, state, and local regulations.

4.2 TANK AND WASTE CHARACTERIZATION

4.2.1 Historical Background

The 241-CX-72 tank is located in the Strontium Semiworks Facility of the 200-E Area as shown in Figure 4-1. Tank 241-CX-72 was installed at the Strontium Semiworks Facility in 1955 and used as an experimental tank to determine characteristics of self-concentrating waste from pilot plant studies for the plutonium and uranium recovery by extraction (PUREX) solvent extraction process. As shown in Figure 4-2, Tank 241-CX-72 is an upright, cylindrical vessel 40 inches in diameter and 35 feet, 8 inches in length, mounted inside a caisson. Support pads, welded to the bottom of the tank, rest on the concrete pad that forms the bottom of the caisson. The 3/8 inch thick vessel walls are reinforced with five stiffener rings that extend nearly out to the caisson wall. Three rows of vertical guides connect the stiffener rings. A cylindrical electrical heater is mounted just above each stiffener ring. The top of the vessel is sealed with a plate that also extends over the caisson and seals the caisson. A 3 inch diameter dry well is mounted on the inner wall of the tank. Two 8 inch diameter risers are mounted near the center of the tank. One of the risers contains dip tubes that were used for liquid level and density measurements. A sparger is mounted in the bottom of the tank. A manually operated system of paddles (for "feeling" the sludge level) was mounted concentrically within the tank. These paddles were operated through a system of actuator rods that originally extended from within the vessel to above ground. Approximately 15 feet of this system of actuator rods was pulled from the tank by heavy equipment sometime between 1986 and 1988. The tank was constructed of ASTM A-7-52T, carbon steel, which is similar to ASTM-A36 (reference: Drawing H-2-2563, see Appendix A). The top of Tank 241-CX-72 is presently buried 13.71 feet below grade (Grade elevation = 682.96, reference: Drawing H-2-2554, see Appendix A.)

The tank is set inside a caisson which is a cylinder fabricated from 1/2 inch carbon steel plate. The caisson is 6 feet in diameter and 35 feet, 8 inches long. The bottom of the caisson is a 12 inch thick reinforced concrete plug which is supported by reinforcing bars welded to the inside of the caisson (reference: Drawings H-2-4422 and H-2-4423, see Appendix A).

Figure 4-1. Plan of 200-E Area Showing the Location of Tank 241-CX-72.

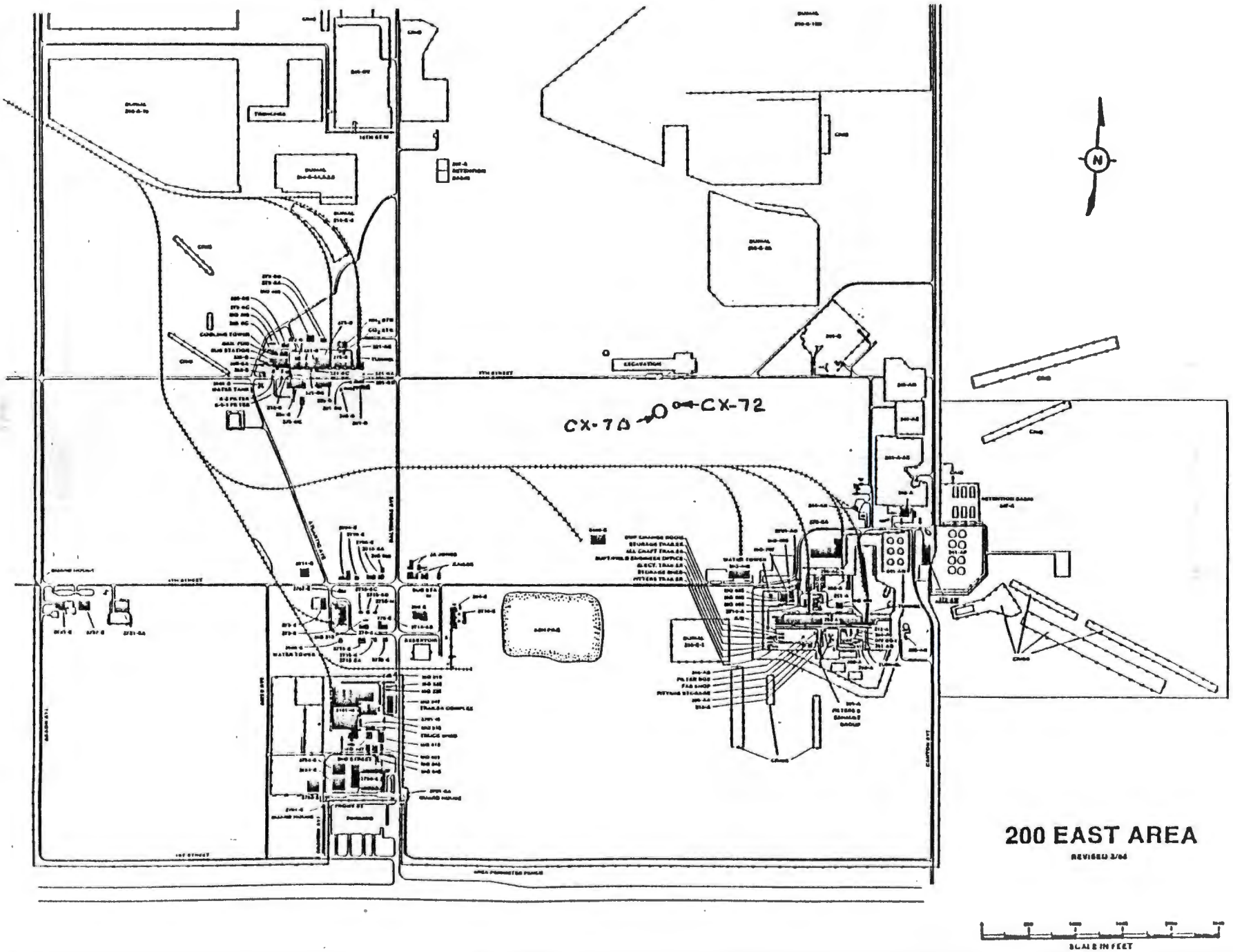

Figure 4-2. Simplified Cross Sectional View of Tank 241-CX-72.

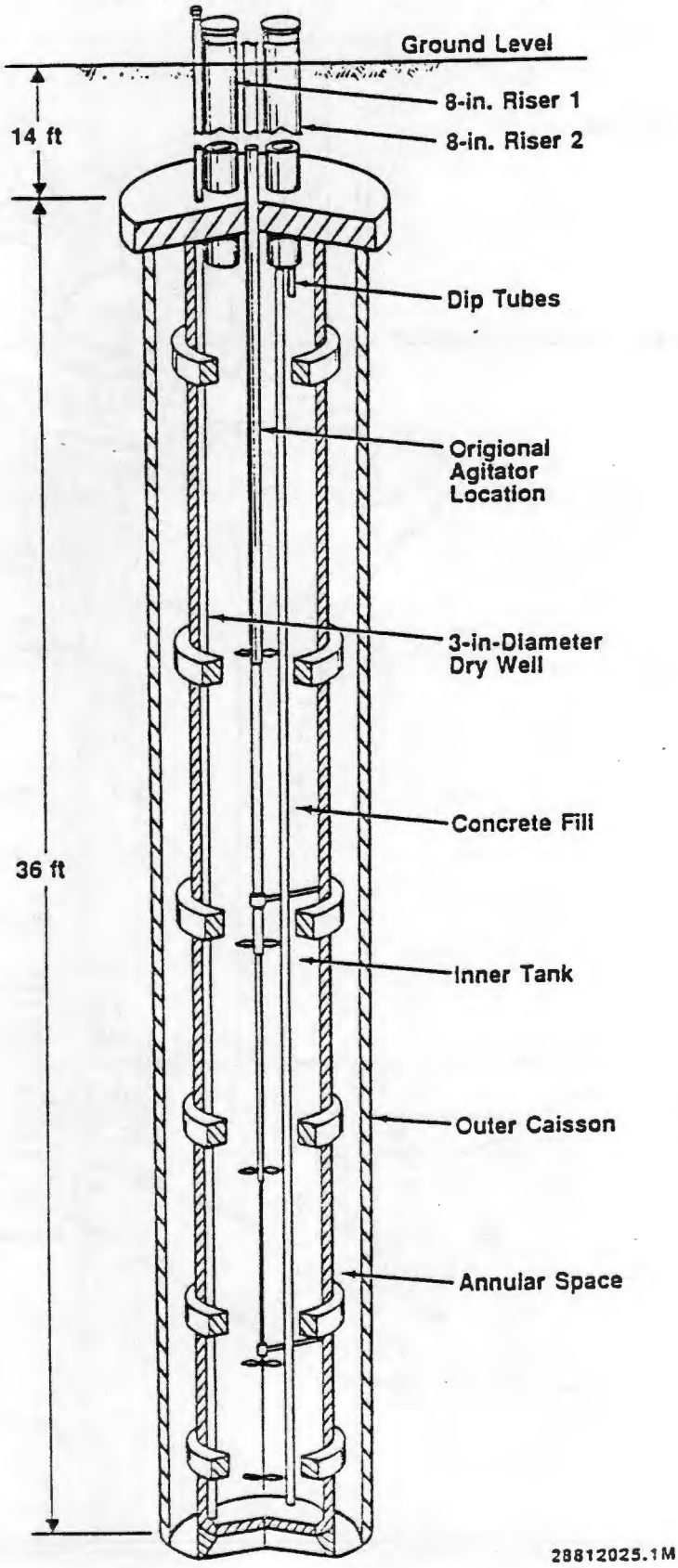

Records indicate that this tank was in operation for less than one year. In June 1974, material level measurements indicated that 73.5 inches of sludge and 1 inch of liquid were present in the tank. A sample of the liquid showed it to be a clear, light brown solution with a pH of 9.5 and a trace of solids. The solution contained the following concentrations of radionuclides:

Pu	1.13×10^{-8} g/gal
U	2.43×10^{-3} g/gal
^{137}Cs	none detected
$^{89,90}Sr$	4.33 nCi/gal

In November of that same year, a level of 75.75 inches was measured. Sampling was then discontinued.

In November 1976, sludge measurements and visual inspection of the tank indicated that no sludge was present in the tank. At this time, it was planned to obtain optical equipment that would allow visual inspection, however this equipment was apparently never obtained.

Records from June 1977 indicate a discrepancy between the tank volume and level:

Volume (gallons)		Levels (inches)	
Liquid	Solid	Liquid	Solid
5	325	74.5	1.0

In March of 1978, the tank was recorded as being empty. In 1986, a liquid level measurement confirmed that the tank was empty. Based on this information, the tank was decommissioned and filled with grout in 1986.

The tank is presently believed contain a sludge layer of approximately ten feet in depth. The 1986 inspection failed to indicate the presence of sludge either because the inspection was made in the drywell, or the dryness of the sludge made it appear as if the tank was empty.

In the fall of 1988, neutron and gamma measurements were taken from within the 3 inch drywell[2]. These neutron and beta/gamma measurements indicated the presence of transuranium isotopes. The radiation exposure rate measured at a location 47 feet below grade in the tank drywell is 476 R/hr, at the 38 foot level the exposure rate is 168 R/hr, from there to grade level, the exposure rate drops off rapidly to 0.0006 R/hr. Presently, it is believed that the sludge layer contains sufficient quantities of transuranic material such that the contents of the tank may have to be classified as TRU.

In the spring of 1989, additional radiation measurements from within the drywell were obtained[2]. Gamma spectra measurements taken at 19 feet from the top of the riser indicated a high cesium concentration or a possible void in that area.

A core sample of grout obtained within the top 2 feet of the 8-inch riser indicates that it is non-radioactive, and that it is of inferior structural strength. A penetrometer was used to test the compressive strength of the grout. (The penetrometer was used because no reliable compressive strength tester is available at present. Earlier experiments concluded that penetrometer readings could be converted to compressive

9 1 1 1 3 9 4 0 6 2 4

strength values provided the material being tested has a compressive strength of less than 1200 psi.) The calculated compressive strengths at three different points on the face of grout sample were all less than 1000 psi (520, 923, and 945 psi). The grout crumbled into 3/8 inch and smaller pieces when removed from the sample tube. These results are consistent with the delivery specification for the grout (100 to 350 mesh sand with 3/8 inch aggregate, and a 3:1 sand to cement ratio, and a slump of 8 inches). Based on the specification the grout, there is no reason to suspect that it contains hazardous material.

4.2.2 Characterization of the Tank Vessel

A structural analysis of the tank assuming "new" conditions indicates that the lifting lug stiffeners, lifting lug welds, lifting gusset plate welds, and lid to tank weld capacity exceed the gross load[8]. However, the throat of the lifting lug itself is inadequate. There is a 16 fold safety factor in the strength of the tank walls. However, hand calculations indicate that the strength of the bottom may be marginal. A finite element computer analysis, coupled with an estimate of the thickness of the steel plate and welds, is required to determine the integrity of the tank bottom. Radiation monitoring of the floor of the caisson and sampling of the surrounding soil would provide some indication as to whether or not a leak had occurred, and consequently if the tank structure is of questionable integrity. However, if these tests yield negative results, no valid conclusions could be reached about the wall integrity. This tank was constructed of carbon steel plate in the early 1950s. There are few historical records of tank operations that would allow for the calculation of wall and weld thicknesses. For example, although the tank was originally designed to study the effects of caustic boiling waste, it is considered possible that an acidic solution may have been allowed to boil in the tank.

4.2.3 Characterization of the Tank Contents

Neutron and gamma data were obtained via the dry well of Tank 241-CX-72[2]. The neutron measurements taken at approximately 10 feet from the tank bottom, indicate that mostly fast neutrons are present. Since few thermal neutrons are present, it can be inferred that no moderator, such as water, is present between the neutron source and the neutron detector. There are several configurations that could give rise to such observations: 1.) The neutron emitting material is a coating on the inner wall of the vessel and the material that fills the tank up to approximately 10 feet from the bottom is dry; 2.) The neutron emitting material is a coating only on the outer wall of the dry well; and 3.) There is a dry sludge in the bottom of the tank that contains the neutron emitting material.

If the neutron emitting material is a coating on the inner wall, the sludge layer could only have been a dry, non-radioactive sludge that was present immediately prior to grouting or, in the absence of an initial sludge layer, grout that became dehydrated. However, any sludge would be expected to contain the same neutron emitting isotopes as those that are coated on the wall. The temperature measured at the bottom of the dry well is approximately 80 degrees F and would not be expected to cause dehydration of the grout. The first proposed configuration can be ruled out.

It is very unlikely that any neutron emitting material would be present on the outer wall of the dry well and not on the inner wall of the tank since the dry well and tank wall are constructed of the same carbon steel and were exposed to the same operational environment. For this reason, the second proposed configuration can be ruled out.

Tank 241-CX-72 was originally used as an experimental tank to determine the characteristics of self-concentrating wastes during 1956. In June 1974, material level measurements indicated that 73.5 inches of sludge and 1 inch of liquid were present in the tank(9). In 1976 it was planned to pump several tanks dry but to leave any solid material: "...solutions contained in the 361- series tanks and Tank CX-70 (Tank C-72 [sic] contains only sludge) will be incrementally pumped to a 5,000-gallon capacity tanker truck for transport to an underground storage tank....Sludge sampling is scheduled for all tanks to characterize the stored contents."(10) Later in that year, attempts to obtain a sample of sludge from the tank indicated no sludge was present: "Sampling was attempted in another location in the tank but no sludge was found. Sludge measurements and visual inspection of the tank indicate that there is no sludge in the tank."(11) If sludge was indeed present, the failure to obtain a sample could be explained if the sludge was a very hard material. Over the course of 12 years, between 1974 and 1986, the material could have dried out because of internal heat generation. Grout added to the tank in 1986 would not have penetrated the solid layer at the bottom of the tank. For these reasons, the third configuration is considered the most likely.

Results of a gamma spectroscopic survey at the 19 foot depth indicated an approximate 40% difference between the maximum and minimum values of the only isotope identified, ^{137}Cs(2). Similar gamma spectra could not be obtained at deeper locations because of high activity levels. A one inch diameter, one inch long cylindrical NaI(Tl) detector with a 5/8 inch window shielded by 1/2 inch of lead was used for these measurements. The detector assembly was positioned inside the 3 inch drywell located at the inside periphery of the tank. The maximum reading was observed with the window directed towards the axis of the tank while the minimum reading was obtained with the window directed away from the tank axis. The observed difference in these readings is considered a positive indication of gamma activity being present inside the tank because of the fairly wide field of view (103 degrees of arc), and the fact that the lead shielding, with the window directed away from the tank attenuates the ^{137}Cs gamma peak by about 75%. It may be possible, using a detector with narrower field of view, to distinguish between ^{137}Cs being present as a coating on the walls of the tank or drywell as opposed to the activity being present in the bulk of the grout.

A core sample recently obtained from the top of the 8 inch riser is of poor structural integrity. This finding is consistent with the "bulk fill" specification for the grout. This sample was non-radioactive.

9 1 1 1 8 9 4 0 6 2 6

4.2.4 Assumptions

The radiation measurements taken indicate that there are three distinct regions in the tank: The bottom 10 feet is characterized by a high neutron flux and few thermal neutrons; an intermediate layer characterized by a gradual decrease in neutron activity which is consistent with an expected decrease due to distance and shielding (i.e., the tank contains grout); and a top layer that contains little or no activity (the tank wall is relatively free of contamination).

In the absence of more solid evidence (such as a core sample) the following description of the tank contents was assumed: The bottom ten feet of the tank contains approximately 2.5 cubic meters of a dry solid that holds most of the TRU material (150 to 200 g of ^{239}Pu is the best estimate[2]). There is a possibility that a significant fraction of neutrons is due to ^{244}Cm, which is considered non-TRU, however, there is no simple way to confirm this theory without a sample of the material. Based on the assumed similarity of these wastes to PUREX type wastes, this material is probably non-hazardous. However, there is a possibility that the tank was used to receive decontamination flush chemicals, in which case there may be significant quantities of hazardous materials present[12].

The intermediate layer consists of fairly uncontaminated grout with a coating of cesium on the tank walls. The upper five feet of the tank shows little or no radioactivity which would indicate that the cesium wall coating ends at this level. Based on the only grout core sample obtained to date, it is assumed that the bulk of the grout contains little or no radioactive contamination and has no structural strength. Assuming that the grout does not meet the criteria for being classified as TRU waste, but rather meets the criteria for low-level waste (LLW) as defined in the waste acceptance criteria[13], the disposal of the approximately 6.2 cubic meters of grout will be relatively simple. Even if this waste is classified as high-level waste (HLW) (but not TRU), there is provision for 200 Area disposal. Any grout that is retrieved that has sufficient levels of transuranic contamination will be packaged as transuranic waste.

Throughout this document, the bottom stratum is referred to as the "sludge" layer, while the other two regions are referred to collectively as the "grout" layer. These terms are used subjectively and are derived from the origin of these layers. Moreover, the term "sludge" is commonly used at Hanford to indicate unprocessed settled material in tanks. The strict definition of the term "sludge" has connotations of a moist soft material (mud). However, it would be incorrect to assume that the "sludge" layer in Tank 241-CX-72 is a moist soft solid.

4.2.5 Uncertainties

There are several uncertainties that require resolution in order to design the preferred retrieval option:

1. <u>Identity of the neutron emitting material.</u> It is possible that much of the neutron radiation is due to ^{244}Cm, which is defined as non-TRU. A sample of this layer may indicate that ^{244}Cm is present and may rule out the need to utilize a TRU facility. If the concentration of ^{244}Cm present is shown to be not greater than Class C concentrations,

as defined in 10 CFR 61.55, the sludge layer could be left in place. If most of the neutron emitting material is in fact ^{239}Pu, there is uncertainty as to the quantity that might be present. Resolution of this uncertainty may permit the use of hydraulic removal techniques if it can be proven that there would be no possibility of a criticality occurring.

2. Physical nature of the sludge layer. The hardness of the sludge layer can only be estimated at this point. Obtaining a core sample would allow a determination of the hardness of this layer, which would provide data necessary for assessing the feasibility of using hydraulic removal technology. If feasible, the data would also be used to properly design the hydraulic removal equipment.

3. Chemical nature of the sludge layer. Lacking historical information, a sample of this layer would permit a determination to be made as to whether or not hazardous waste is present, and would allow for the design of a chemical process for removing and/or stabilizing the sludge layer.

4. Physical nature of the grout layer. The solidity and cohesion of the grout must be determined in order to assess the feasibility of removing the sludge layer while leaving the grout in place.

5. Physical nature of the tank wall and tank bottom. The structural integrity of the tank must be determined in order to assess the feasibility of removing the tank waste via sluicing, or removing the tank with the sludge layer intact.

4.3 SELECTION OF THE PREFERRED OPTION

Several options for the retrieval of the waste from Tank 241-CX-72 were considered prior to recommending the preferred option. The logic that was used to define the preferred option is illustrated in Figure 4-3. The method involved identifying various combinations of retrieval methods that would result from the outcome of six decision gates (questions). Each of these decision gates is discussed below.

1.) Can sludge layer be left in place?

Criteria to be met:
The sludge layer must be non-TRU, not-GTCC, and non-hazardous.

Method of determination:
Characterization of the sludge layer.

Discussion:
The sludge layer may be characterized either directly or indirectly. Direct methods would require obtaining a core sample of this layer which could be analyzed by laboratory techniques to determine the quantity of TRU, or hazardous waste materials that are present. In the absence of direct measurement, this layer could be characterized by indirect methods which would require gamma and neutron measurements coupled with accurate data from the processes that generated the waste. Radiation measurements

Figure 4-3. General Logic Diagram for Selection of the Preferred Method.

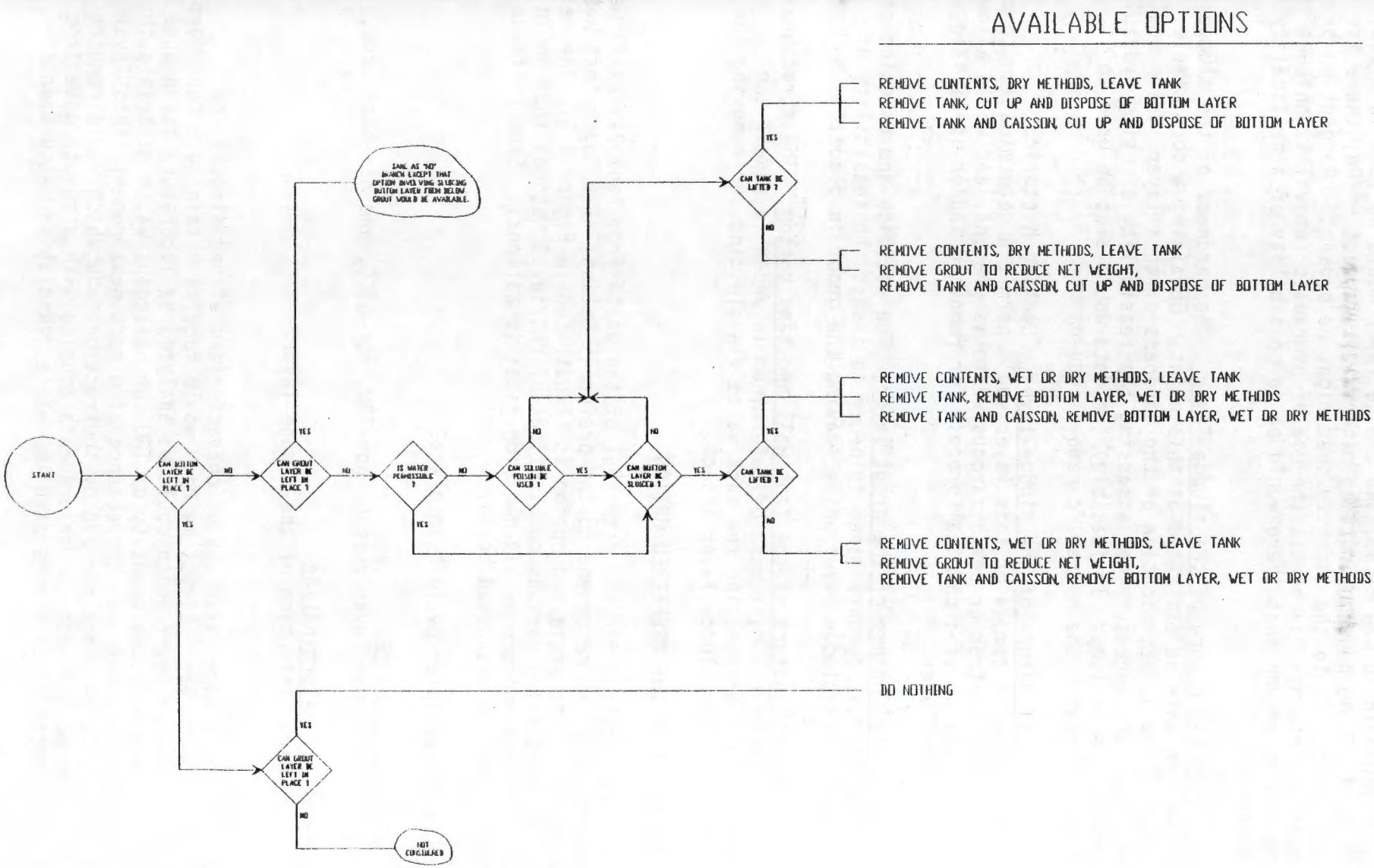

gathered to date,[2] coupled with a limited amount of process data, indicate that this layer contains 150 to 200 g of plutonium which would require the classification of this material as TRU. The characterization of this material as TRU is based on the assumption that most of the neutrons being observed are generated by plutonium (predominately as fluorides). There is a possibility that ^{244}Cm is the source for a significant fraction of neutrons, which would make the material non-TRU, but possibly GTCC. Direct characterization would be required to confirm this hypothesis, however.

Based on the assumed similarity of these wastes to PUREX type wastes, this material is probably classified as non-hazardous. However, there is a possibility that the tank was used to receive process flushes which may have contained hazardous chemicals.

Conclusions:

- Radiation measurements indicate that the sludge layer may be TRU.
- Available process data are consistent with conclusion that the sludge layer may be TRU.
- The tank may contain hazardous waste.
- The only way that above conclusions could be altered would be to obtain a sample.
- The sludge layer requires further characterization and possible removal because it may contain TRU waste.

2.) Can grout layer be left in place?

Criteria to be met:

The grout must be non-TRU, non-hazardous. If the sludge layer is to be removed from beneath the grout layer, the grout must be of sufficient mechanical strength to resist the forces involved.

Method of determination:

Characterization of the grout layer.

Discussion:

The grout layer may be characterized either directly or indirectly. Direct methods would require obtaining a core sample of this layer which would be analyzed by laboratory techniques to determine the quantity of TRU, or hazardous waste materials that are present, and to determine the physical characteristics of the grout. In the absence of direct measurement, this layer could be characterized by indirect methods which would require gamma and neutron measurements coupled with accurate data from the processes that generated the waste. A core sample obtained from the top of the tank riser indicates that it is non-radioactive, and that it is of inferior structural strength. However, the characteristics of this sample of grout are not necessarily representative of the bulk.

9 1 1 1 3 9 4 0 6 7 0

Conclusions:

- 0 Radiation measurements indicate that the grout, taken as a whole, is non-TRU.
- 0 There was nothing added to the grout to make it hazardous.
- 0 The grout is probably of weak structural integrity.
- 0 The only way these conclusions could be altered would be to obtain a sample from deeper within the grout.

3.) Is water permissible?

Criterion to be met:
The waste must be demonstrated to remain sub-critical under all circumstances.

Method of determination:
Characterization of the sludge layer.

Discussion:
In order to answer this question, the sludge layer must be characterized directly. Direct methods would require obtaining a core sample of this layer which would be analyzed by laboratory techniques to determine the quantity of fissionable material that is present. In the absence of direct measurement, it must be assumed that the quantity of fissionable material that is present would result in a nuclear excursion if water were to be added to the system. This would force the use of dry sampling and waste removal techniques up to the point at which the sludge layer is fully characterized. As discussed above, the plutonium content of the tank is probably less than 200 g, and is probably in a distribution such that a safe mass cannot be exceeded. It is therefore probable that water could be used if appropriate. However, direct characterization of the waste material is required in order to proceed with any retrieval method that uses water.

Conclusions:

- 0 If direct sampling confirms the estimate of 150 to 200 g Pu, and a distribution of fissionable material such that a safe mass cannot be exceeded, water would be permissible.

4.) Can a soluble poison be used [added to water for sluicing]?

Criterion to be met:
The waste must be demonstrated to remain sub-critical under all circumstances.

Method of determination:
Characterization of the tank contents.

Discussion:
WHC policy(7) provides that: "Soluble poisons shall not be used as the primary means of precluding criticality unless the system is behind a massive shield. Soluble poisons may be used in unshielded systems as a secondary control to be operative in the event that the primary control mechanism is voided. In either case, the presence of the materials must be ensured." The poison must remain

soluble under all conditions. Direct characterization of the sludge layer (in addition to the grout layer, if the sludge layer is to be sluiced from beneath the grout), is required in order to properly specify the performance of the poison. Secondary issues would involve compatibility of the poison with the double shell tank waste. However, this is presently assumed to be a minor problem since, for example, boron could be used as a poison and the transuranic fraction of the high level waste will be vitrified in a borosilicate glass.

Conclusions:

- Soluble poisons cannot be used without full characterization of tank contents.
- Soluble poison is probably not necessary since the TRU content is probably in a distribution such that a safe mass will not be exceeded, as discussed above.

5.) Can the sludge layer be sluiced?

Criteria to be met:

The sludge layer must be shown to have the physical and chemical characteristics necessary for successful sluicing. In addition, the tank walls must be shown to be of sufficient structural integrity to withstand the sluicing pressure needed to dislodge the waste material.

Method of determination:

Direct characterization of the sludge layer plus verification of tank integrity. Dry well monitoring in the caisson and surrounding soil.

Discussion:

Physical and chemical characterization of the sludge layer will allow a determination to be made regarding the feasibility of sluicing this material. Neutron measurements performed recently indicate the absence of thermal neutrons emanating from this layer[2]. It can be inferred that this material is dry, but the hardness of the material, and its solubility in aqueous solutions, cannot presently be estimated. A feasibility study would address such concerns as the material hardness, and solubility in water, acidic or caustic solutions. Characterization of the tank wall integrity is required to verify that the tank will not leak aqueous transuranic solutions. Radiation characterization of the floor of the caisson and surrounding soil would indicate whether or not a leak had occurred, and consequently that the tank structure is of questionable integrity. However, if these tests yield negative results, nothing could be concluded about the wall integrity. This tank was constructed of carbon steel plate in the early 1950s. There are few historical records of tank operations that would allow for the calculation of wall and weld thicknesses. For example, although the tank was originally designed to study the effects of caustic boiling waste, it is possible that an acidic solution may have been allowed to boil in the tank. If shown feasible in the laboratory, a full scale sluicing process may be properly designed.

9111394072

Conclusions:

- The sludge layer is composed of a dry material.
- The hardness, and water solubility of the material are unknown.
- There is no reliable chemical process data that would allow an estimation of the chemical and physical properties.
- Chemical and physical characterization of sludge layer, plus a determination of tank integrity are required to proceed with a retrieval process that utilizes sluicing.

6.) Can the tank be lifted?

Criterion to be met:

The tank must be shown to be of sufficient structural integrity to withstand the stresses needed to remove the tank.

Method of determination:

Structural analysis of the tank assuming "new" condition of tank. Direct verification of tank integrity. Indirect verification by dry well monitoring in the caisson and surrounding soil.

Discussion:

A structural analysis of the tank assuming "new" conditions indicates that the lifting lug stiffeners, lifting lug welds, lifting gusset plate welds, and lid to tank weld capacity exceed the gross load[8]. However, the throat of the lifting lug is inadequate. There is a 16X safety factor in the strength of the tank walls, however, hand calculations indicate that the strength of the tank bottom may be marginal. A finite element computer analysis, coupled with an estimate of the thickness of the steel plate and welds, is required to determine the integrity of the tank bottom. Radiation monitoring of the floor of the caisson and surrounding soil would indicate if a leak had occurred, and, consequently, that the tank structure is of questionable integrity. However, if these tests were to yield negative results, no conclusion could be drawn concerning the wall integrity. This tank was constructed of carbon steel plate in the early 1950s. There are few historical records of tank operations that would allow for the calculation of wall and weld thicknesses. For example, although the tank was originally designed to study the effects of caustic boiling waste, it is possible that an acidic solution may have been allowed to boil in the tank.

Conclusions:

- Structural calculations performed to date indicate that the lifting lugs are not adequate for lifting the tank in its present (full) condition.
- Verification of the integrity of the tank bottom is required to make a final determination as to whether or not the tank can be lifted. (A sample of dry well or actuator rod to analyze for corrosion may be acceptable).
- A reduction in the net weight of the tank may allow the tank to be lifted.

9 1 1 1 1 0 1 0 6 3 3

The best available information about the tank and its contents allows the elimination of several paths on the logic diagram. As shown by the bold lines in Figure 4-4, the remaining pathways and associated options are derived from the following conclusions:

1.) The sludge needs to be removed since it probably contains high concentrations of TRU material.

2.) The sludge layer cannot be removed from beneath the grout since the grout probably does not have the necessary cohesion and solidity to remain in place.

3.) Water will probably be found to be permissible (from a criticality prevention perspective) once the sludge layer is characterized.

4.) The available information concerning the condition of the tank and the characteristics of the sludge make it impossible to select the preferred option for sludge retrieval. Analysis and inspection of the tank coupled with characterization of the sludge layer will resolve these issues.

The preferred option, described in detail in Section 5, while not shown explicitly on the logic diagram, is a linear combination of available options. The preferred option will be performed in a phased sequence that is considered to be a prudent approach to the problem.

5.0 RECOMMENDED SAMPLING AND DECOMMISSIONING METHOD

The current configuration of Tank 241-CX-72 prevents direct characterization of the tank and its contents in an economical manner. Without these characterizations, it is impossible to fully define a safe and effective means for retrieval of the waste and stabilization of the area. The prudent course of action is considered to be one that would allow economical characterization of the tank and contents and retrieval of the sludge material in a manner that maintains safety, preserves the state of the environment, and allows for the eventual closure of the site. The recommended approach is a three phase process. Phase 1 will effectively return the tank to its pre-1986 configuration by removal of most of the grout layer. Phase 2 allows for the characterization of the sludge, and the tank. At this point, a final retrieval method will be designed and implemented. Phase 3 will be the process that is used to remove the sludge and to stabilize the site.

5.1 GENERAL DESCRIPTION

The first phase of the preferred method is depicted in Figure 5-1. Prior to the actual retrieval process, the structural integrity of the tank will be studied to the greatest extent possible. For example, it may be feasible to ultrasonically test the drywell wall and extrapolate these results to estimate the extent of corrosion of the tank walls. (Visual inspection of the tank wall, as the grout is being removed, will also be performed.) A minimum of 3 soil samples taken around the outside of the

9 1 1 1 3 9 4 0 6 7 4

Figure 4-4. Logic Diagram Showing Available Options.

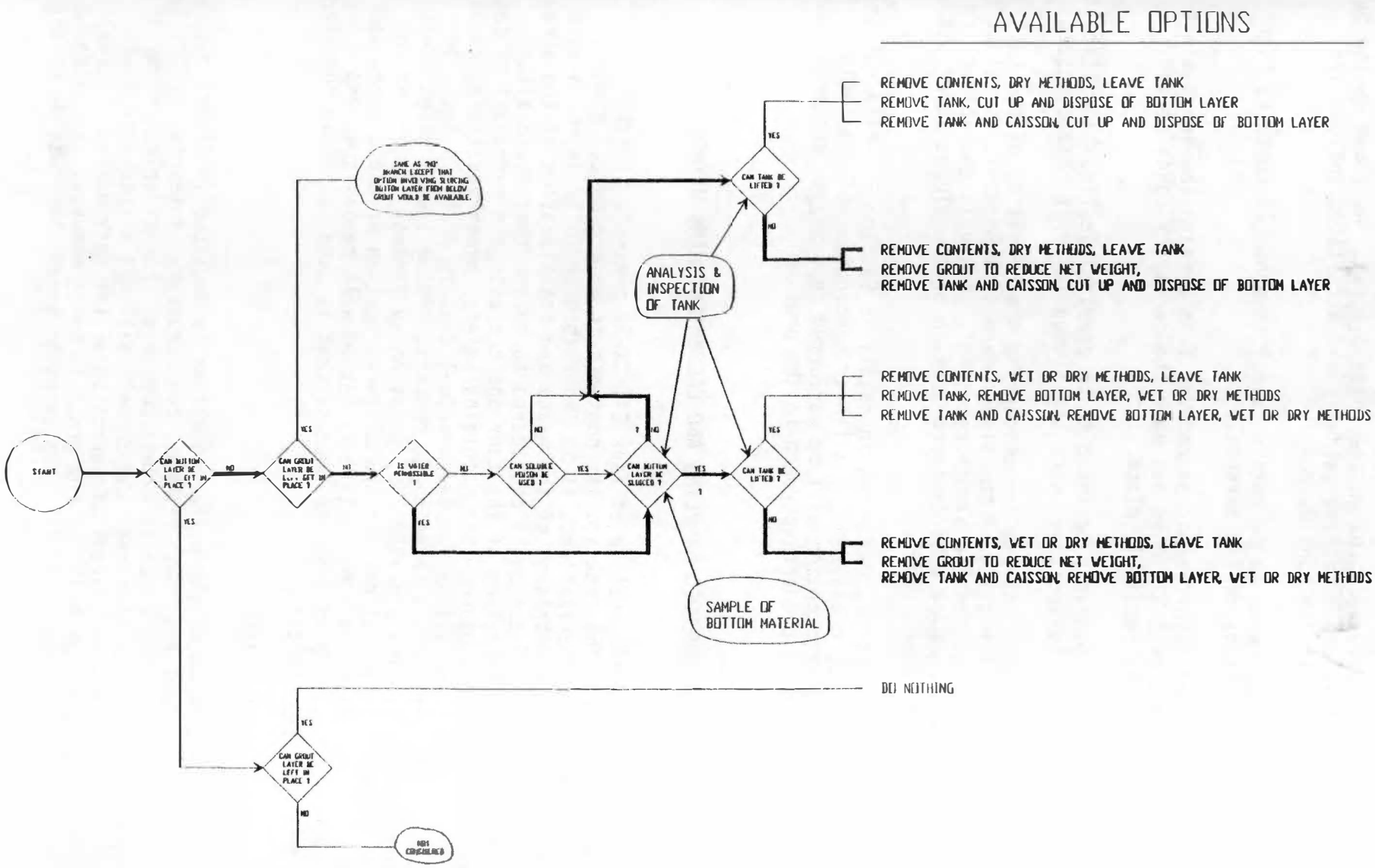

Figure 5-1. Phase 1 of the Proposed Method of Sampling and Decommissioning of Tank 241-CX-72.

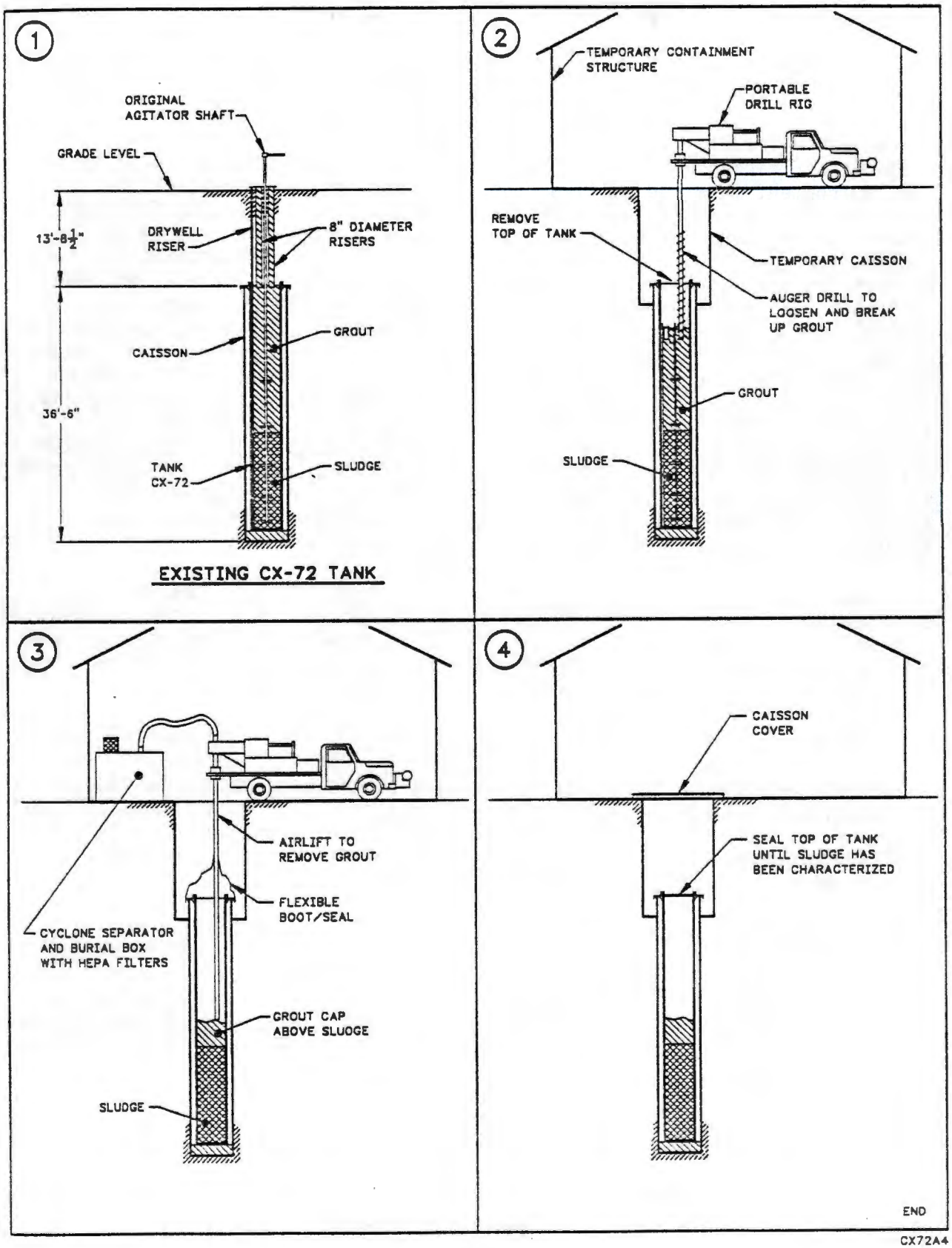

9111194065

caisson, and extending below the caisson bottom will be used to assess the caisson for leakage.

Installation of a temporary 10 foot diameter caisson, extending from the present grade level to the top of 241-CX-72 will provide access to the top of the tank. A temporary enclosure with exhaust filtration will be placed above the excavation. The exhaust will be filtered through a two-stage High Efficiency Particulate Air (HEPA) filter configuration to protect the environment from radioactive contamination. After removal of the tank lid, the annulus between the caisson and tank will be inspected for tank leakage by swabbing the outer wall of the tank and checking the swabs for radioactive contamination. Most of the grout will be removed from the tank through dry mining techniques. A cap of grout, a few feet thick, will be left on top of the sludge layer to ensure that none of the sludge layer is removed during this phase. Continual monitoring of the ventilation exhaust, coupled with periodic sampling of the grout as it is retrieved, will ensure that none of the radioactive sludge is removed. The samples will also be used to determine if the grout contains hazardous materials. Drilling and vacuum methods will comprise the primary grout removal technique. The removed grout will be sampled, analyzed, and disposed of in accordance with existing solid waste packaging and disposal requirements(13). At this point, temporary water proof and shielded covers will be placed over the tank and caisson to maintain the condition of the tank and the temporary caisson and to reduce the need to ventilate and monitor the tank.

Upon completion of Phase 1, Phase 2 will commence with the removal of core samples of the sludge as discussed in Section 5.1.3. Further inspection and analysis of the exposed tank wall will be performed, if necessary. The sludge samples will be characterized for its chemical and radioactive constituents, as well as its physical properties.

Based on the integrity of the tank and the physical and chemical nature of the sludge, the sludge retrieval process will be developed. The retrieval system will center on the use of dry mining techniques, water sluicing, or a combination of the two. Sludge retrieval may be performed with the tank in place or with the tank removed from the caisson and transported to an existing facility (such as T-Plant). The process for sludge removal and site stabilization will be implemented at this point.

Phase 3 will involve the actual process of sludge removal and site stabilization. If the sludge layer is mined from the tank, TRU drums will be used for packaging the material, in accordance with existing solid waste packaging and disposal requirements(13). If sluiced, the material will be sent to a double shell tank. After the tank contents have been removed and tank cleanliness (less than 100 nCi/g) verified, the empty tank (or caisson, if the tank is removed) will be filled in place with sand. The area will then be backfilled to grade level.

5.1.1 Preferred Grout Retrieval Method - Auger/Airlift

The preferred method of grout retrieval is to gradually break up the grout and to airlift the material into approved burial containers, as shown in Figure 5-2. Alternative grout retrieval methods were considered and are discussed in Section 6.2.

9 1 1 1 1 9 4 0 6 3 7

Figure 5-2. Proposed Grout Removal Equipment.

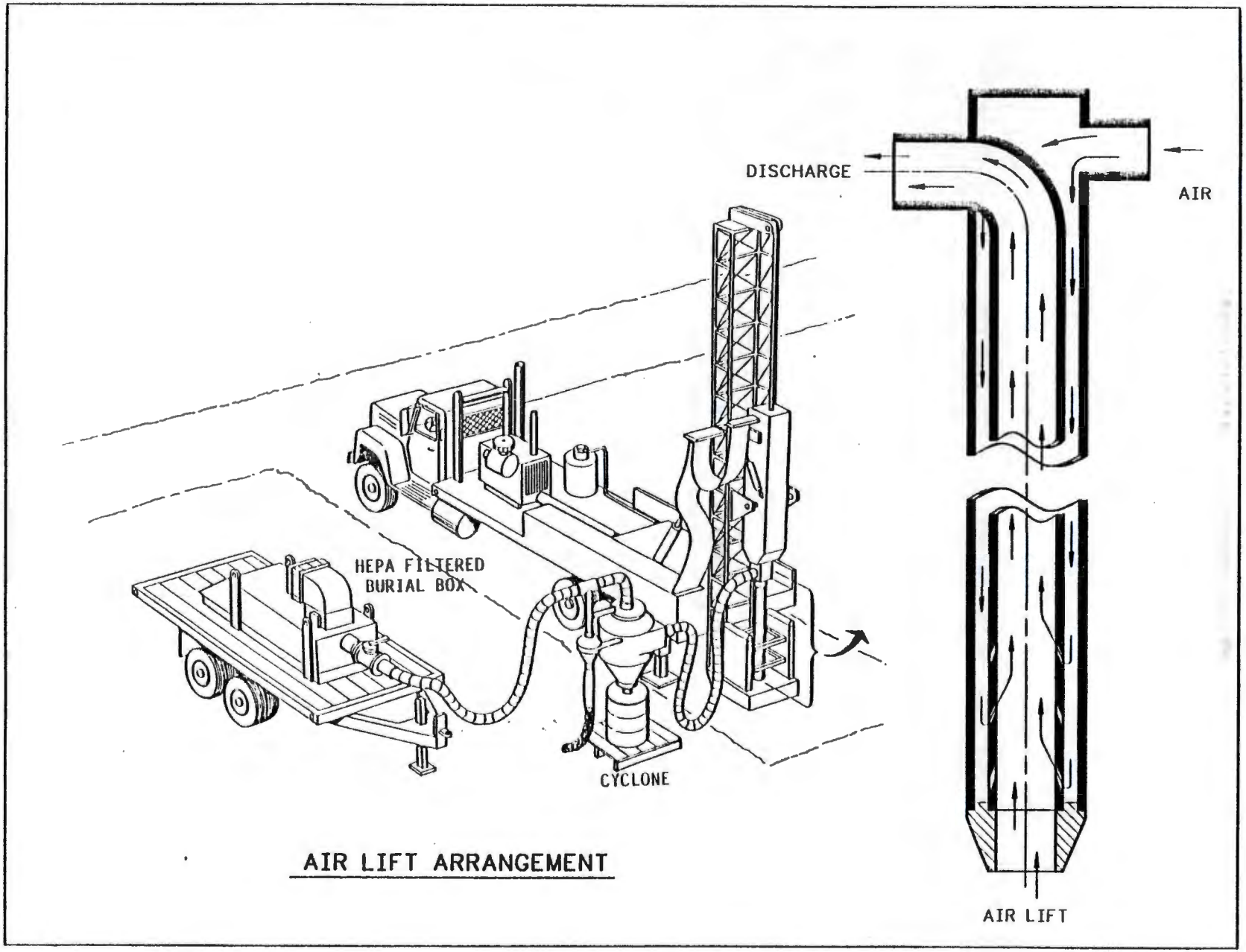

A hammer type of drilling rig is currently being designed. The performance specification was prepared by WHC and Kaiser Engineers Hanford (KEH) is preparing the bid specification. The drill rig consists of a truck mounted tower with a cable suspended hammer drill (gravity drop) and an airlift mechanism for transferring the drilled media through a cyclone separator and then into 55 gallon drums. The air being discharged from the cyclone enters a HEPA filtered containment box which collects the light weight fines.

A system similar to the one described above can be used on this project. However, in order to preserve the integrity of the tank, the use of an auger bit is preferred over the hammer drill. Radiation protection technologists (RPTs) will monitor all of the activities required to remove the grout. In particular, the material removed from the tank will be monitored for high levels of radioactive contamination. The proposed method of grout removal is outlined below:

1.) Soil would be excavated from the surface level to the top of the tank. A 10 foot diameter x 15 feet long caisson, extending from the surface level to the top of the tank, would be installed. A weather tight containment building (greenhouse) with a concrete floor would be installed with the floor sealed to the caisson extension. An exhauster with HEPA filtration system capable of exchanging the air a minimum of six times per hour would be a component of the containment building.

2.) After verifying that no combustible material or gases are present, a torch would be used to cut a 38 inch diameter hole in the cover. The two risers and that portion of the drywell that extends above the top of the tank cover would be removed. Dip tubes and other lines that extend out of the tank cover would be cut and capped.

3.) An auger will be used to drill a series of holes 1 foot in diameter x 20 feet deep in the grout. This action will loosen and break up the grout.

4.) A flexible boot seal, for contamination control, will be installed to the top of the caisson from the concrete floor.

5.) The grout airlift, which consists of a pipe with an air jet, will be installed through the flexible boot/seal. This device will be used to lift the loosened grout. In order to ensure contamination control, the airlift device will be designed and operated so that a slight negative pressure is maintained within the tank, discharge pipe, and grout collection vessels.

6.) The grout will be removed in four foot increments. A cyclone separator will remove the bulk of the solids from the air stream and deposit them into 55-gallon waste drums. The air being discharged from the cyclone separator will flow into a sealed burial box fitted with HEPA filters.

7.) After the grout has been removed, the tank and temporary caisson will be sealed with removable shielded covers.

9 1 1 1 3 1 0 5 3 9

There are two primary advantages to the method outlined above:

1.) The grout can be removed from the tank and deposited into burial containers with a self contained system.

2.) The equipment is relatively simple, readily available, and is adaptable to onsite drilling rigs.

The one major disadvantage to such a method is the possibility of an accidental discharge to the environment. Operation of the system at a slight vacuum will be necessary to prevent this from happening.

5.1.2 Grout Sampling

A sample of grout, which is representative of the bulk of the grout, is required prior to definitive design of the grout retrieval equipment (Phase 1 of the recommended retrieval method). This sample would be used to characterize the grout for structural stability, chemical and radiochemical contents, and other pertinent physical parameters. A core sample taken 10 feet below the tank lid should be adequate for this purpose.

It is desirable to use existing proven drilling equipment for retrieving core samples. Liquid lubricant drilling coolants cannot be used until a criticality analysis has determined that the sludge does not contain a fissionable quantity of material.

5.1.3 Sludge Sampling

5.1.3.1 Criteria for Sludge Sampling. Sampling shall be performed in accordance with the requirements of the EPA and WDOE. A minimum of two core samples is recommended to estimate chemical concentrations and also provide an estimate of the error. This error is composed of the sampling error, the analytical error, and that due to sludge heterogeneity. One core sample is adequate to estimate the sampling error and analytical error. However, a second sample is required to estimate the error due to sludge heterogeneity.

It is desirable to use existing proven equipment for sample core drilling. Liquid lubricant drilling coolants shall not be added to the tank contents while core drilling for samples until a criticality analysis has determined that the sludge does not contain a hazardous amount of fission material.

In order to minimize the risk of spreading radioactive contamination or hazardous materials, the length of time the tank is open to the environment should be minimized.

5.1.3.2 Recommended Method for Sludge Sampling. With some modification, the existing drilling procedure[14] should be adequate for this application. A vertical core sample of the sludge will contain approximately six 19-inch segments. It is recommended that the chemical analyses be performed on each homogenized segment. A minimum of two sample cylinders will be taken from the lower (sludge) portion of the tank.

Several sampler types were evaluated for applicability to sampling the sludge in the tank. It is quite probable, however, that no single sampler

will be able to complete the entire task. What follows is a general discussion of the suitability of the various sampler to specific types of materials.

One Inch Rotary Valve Sludge Sampler

The One Inch Rotary Valve Sludge Sampler (shown on Drawing H-2-91685 in Appendix A), is currently used at Hanford to sample moist sludges. The sampler consists of a stainless steel barrel with a plug valve in the lower end. When the sample tube is full, a piston-rod assembly, mounted inside the barrel, pulls on a cable system that closes the plug valve. After closing the valve, the piston rod is designed to shear a pin with the application of a 40 pound tensile force. This sampler is being redesigned (as shown on Drawing H-2-99316, in Appendix A) but will function similarly to the old design.

The solid core sampler is best suited to sampling moist sludges, however, it may be capable of extracting dry samples that range in coarseness from powders to small chunks. The main impediment to retrieving a sample of powdery or gravely material is that the drill string has little ability to remove drilling fines by itself. Normal paraffin hydrocarbon (NPH) is generally used to keep the sampling area clear of contaminants when the sample tube is removed. The NPH serves to balance the hydrostatic head in the drill string so that when a loaded sampler is pulled out prior to the insertion of an empty sampler, sludge does not fill the drill string. However, until the sludge in 241-CX-72 is characterized, hydrogenous material, such as NPH, cannot be added to the tank. One method to overcome this problem is to replace the rotating drill bit that is currently used with a drive shoe. The drill string would then be driven without rotation.

For relatively hard materials, a rotating bit is required. Flutes could be added to the drill string to carry away the fines. This approach was quickly tried on Tank 109-SX with limited success. Outside of the fact that the drill may suffer from a limited ability to remove the fines, the sampled material would be pulverized by the sampler itself, since the sampler rotates with the drill string. Bearings could be used so that the sampler remains stationary with respect to the sludge. However, the bit tends to wander, radially, and a means of keeping the bit centered would have to be devised.

The main difficulty in retrieving a sample of dry material with this device is the ability to close the valve. If the valve does not close completely, some, if not all, of the sample will be lost. Larger size chunks may more readily bridge the opening and thus a larger volume of this type of material would be expected to be retained than a powdery material. A very hard material that does not break into chunks would not be expected to be held by the sampler at all, since the plunger rod shear pin will break when a force exceeding 40 pounds is applied to the plunger, and the valve would not be expected to shear the sample with this small a force. This sampler could be modified by eliminating the plug valve and using, in its place, a different style end core catcher assembly.

Depending on the nature of the sludge, the solid core sampler

could be used to retrieve a sample. However, modifications to the sampler could be quite extensive.

Split Tube Sampler

The main feature of the split tube sampler (shown on Drawings H-2-91497 and H-2-91498 in Appendix A) is a sample barrel that is split into two pieces along its length. The pieces of the barrel are held together by caps that are screwed on to each end. The split tube sampler is best suited for sampling loose solids. Whereas the laboratory retrieves the sample from the solid core sampler by extrusion, the sample from a split tube sampler is retrieved simply by removing the end caps and removing one of the tube sections. The split tube sampler is actually the predecessor to the solid core sampler discussed above. The solid core sampler was devised because the split tube sampler would not retain free liquids. The split tube sampler is less suited to recovery of solid samples since it can withstand less force than the solid core sampler. The split tube sampler would require minor modifications in order to be used. The quadra latch assembly would require the machining of serrations (similar to those used on the solid core sampler) and the addition of some holding lugs on the tube so that the manipulators used in the laboratory could grip the tube for disassembly.

Salt Cake Sampler

The salt cake sampler is currently being developed specifically for the purpose of sampling salt cake in single shell tanks. The sampler will feature a bit that cuts a smaller annular dimension (kerf), and consequently generates less drill fines, than the current solid core sampler. The drill will possibly have flutes to carry the fines away from the bit. The sampler will be redesigned to receive the slightly larger core diameter and will use a closure that will trap both solids and some liquids. A working model of this sampler is expected to be available by January of 1990. However, there may be as much as another 6 months of work to have the sampler fully operational.

Of the various samplers that will be available, the salt cake sampler would be the most appropriate choice. The drill is being designed specifically to penetrate hard cake and will not require a liquid to remove fines. The drill that is used for the other two samplers is probably less than adequate to penetrate the hard cake. Disregarding the probable difficulties of drilling, the split tube sampler would be preferable over the solid core sampler, because the sample holding mechanisms that are available are more suited to the task than the plug valve on the solid core sampler.

Other than the fact that it would be more costly, there are no technical obstacles to attempt sampling of the sludge prior to retrieval of the grout. The sludge layer could be accessed by first drilling through the grout using a commercially available auger or rock grinder.

9 1 1 8 9 4 0 5 4 2

5.1.4 Sludge Retrieval Methods

Because of uncertainties as to the exact nature of the sludge and of the tank integrity, a final sludge retrieval method cannot be specified at this time. However, several methods to retrieve the sludge were considered to be feasible and are discussed below. The alternatives discussed here were developed primarily for the purpose of placing bounds on the cost estimate for Phase 3. The applicability of each method will be assessed during Phase 2.

5.1.4.1 **Dry Retrieval of Sludge.** The following conditions are assumed: the grout has been removed from the tank; and the sludge is hard, similar to concrete. A truck mounted Longyear 44 drilling rig, with rock drilling bits would drill a series of holes into the sludge. As shown in Figure 5-3, expandable balloon type devices would be installed into one-third to one-half of the holes. These balloons would then be pressurized with air and the expansion would cause the sludge to be broken into chunks.

The chunks of sludge would be reduced in size using an enclosed screw auger with an airlift, and placed into appropriate burial containers. As shown in Figure 5-4, the encased auger would consist of an auger surrounded by a containment housing. A vacuum system would be used to lift the loosened sludge from around the auger and blow it through a system similar to that shown in Figure 5-2. The concrete burial box, which would be sealed, would have HEPA filters mounted in them to filter the air that would be discharged from the boxes. After filling, the burial boxes would sealed for disposal.

5.1.4.2 **Wet Retrieval of Sludge.** The following conditions are assumed: the grout has been removed from the tank; the tank is structurally sound and does not leak; the sludge has been analyzed and it is shown that there is no potential for nuclear criticality; and the sludge possesses the necessary chemical and physical properties for sluicing. Wet removal of sludge may be accomplished: 1.) with the tank in-place; 2.) with the tank removed and lifted above the caisson into a shielded area; or 3.) with the tank removed from the caisson, sectioned (cut) and moved to the T-Plant canyon.

As shown in Figure 5-5, a high pressure water spray would be used to break up the sludge within the tank. The slurry would then be mixed with caustic, to raise the pH of the slurry as required by Tank Farm specifications, and then sluiced out of the tank into a double shell tank. Provided in Figure 5-6 is a schematic diagram of the sluicing equipment.

5.1.4.3 **Tank Removal.** The following conditions are assumed: the grout has been removed from the tank; and the tank has been proven to be structurally sound for lifting. The tank would be removed from the caisson and placed into a shielded disassembly structure, as shown in Figure 5-7. The sludge would then be hard rock mined, sluiced or sectioned without the concern of the tank being ruptured.

The tank could also be sectioned (cut) to a shorter length and sealed. It would then be placed into a shielded container and transported to T-Plant for sludge removal and tank disposal, as shown in Figure 5-8.

Figure 5-3. Expandable Balloon for Fracturing Sludge.

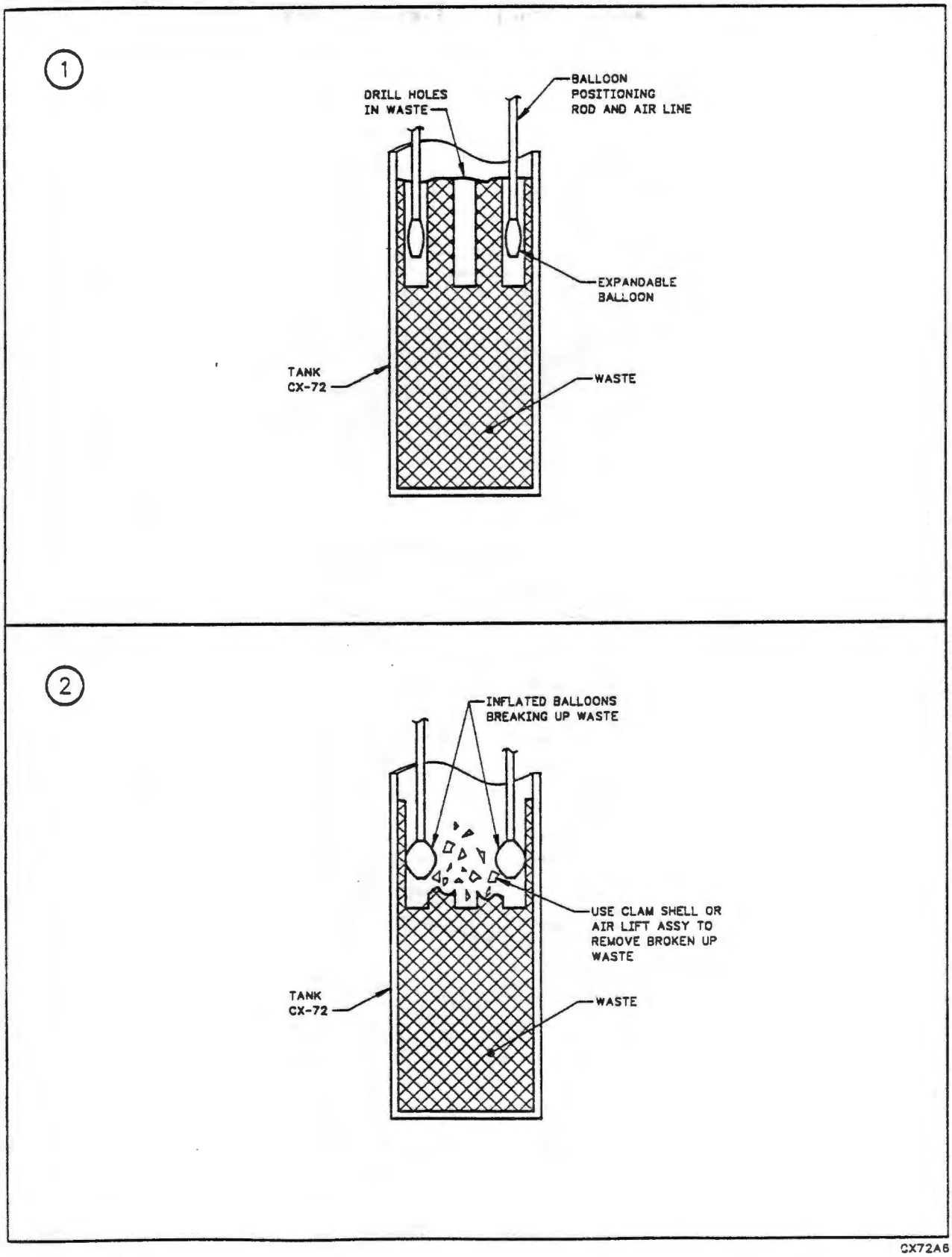

9 1 1 1 3 9 4 0 5 4 4

Figure 5-4. Encased Auger for Sludge Retrieval.

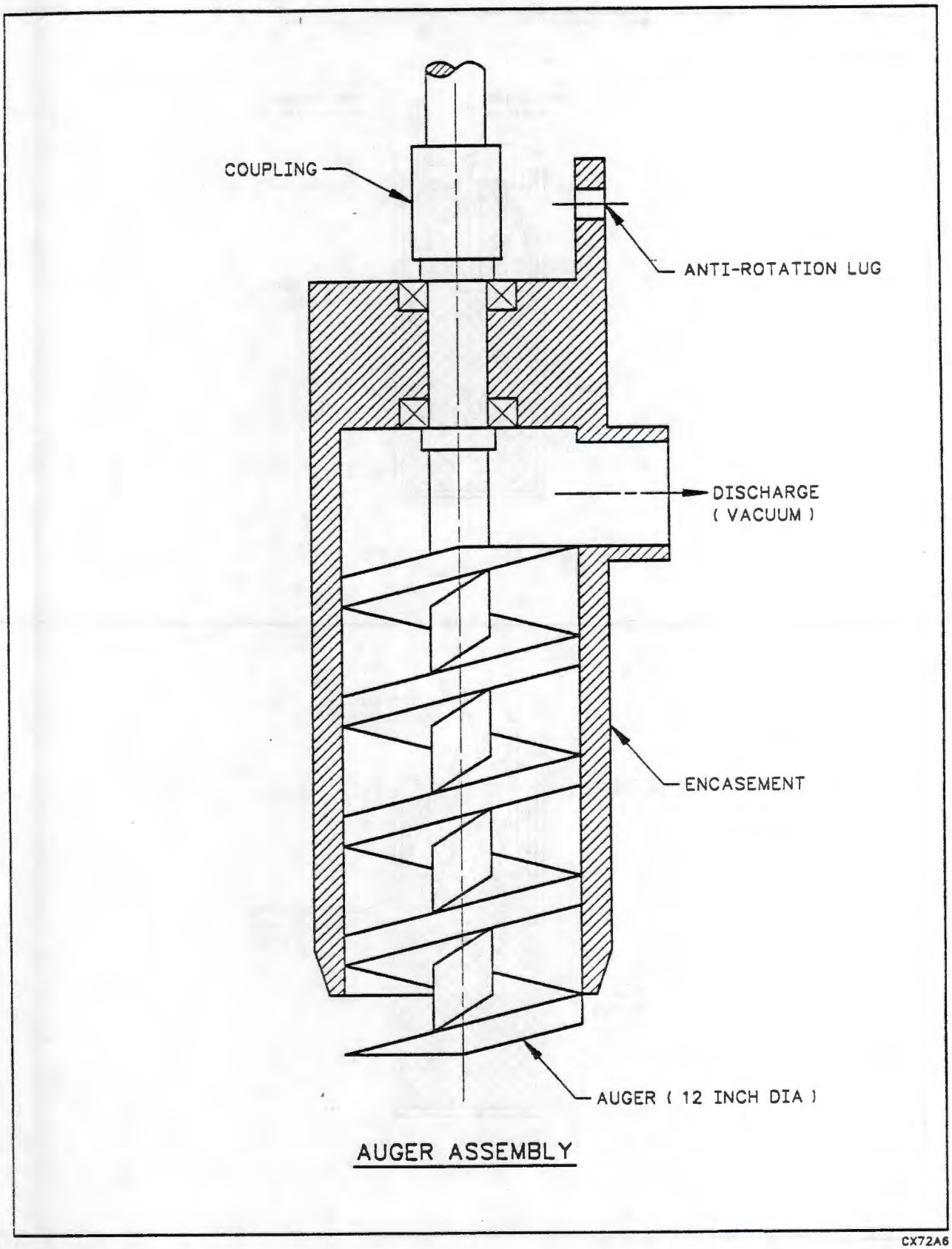

9 1 1 1 1 7 4 0 6 4 5

Figure 5-5, Sheet 1. Sluice in Place Option for Sludge Retrieval.

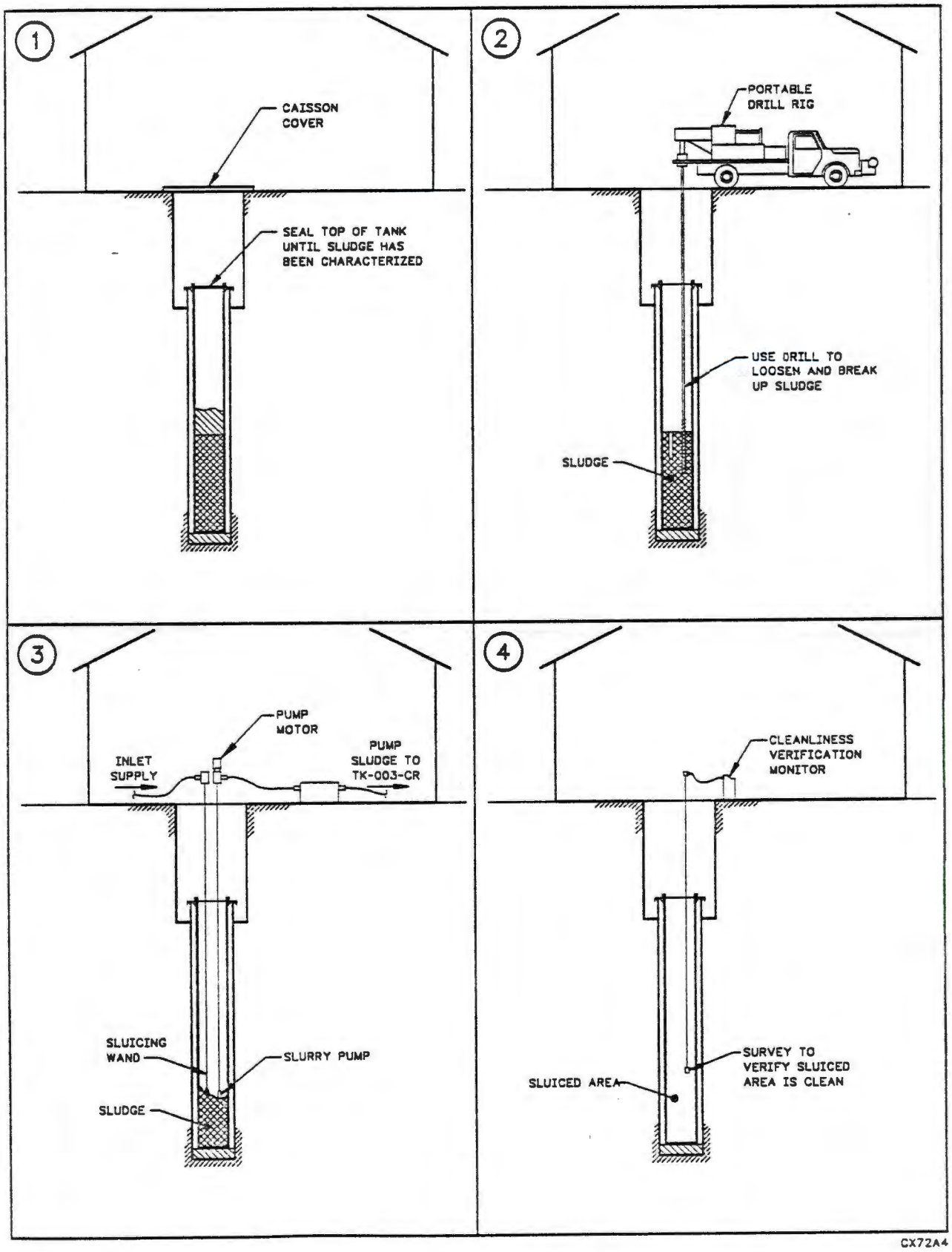

9111394064 6

Figure 5-5, Sheet 2. Sluice in Place Option for Sludge Retrieval.

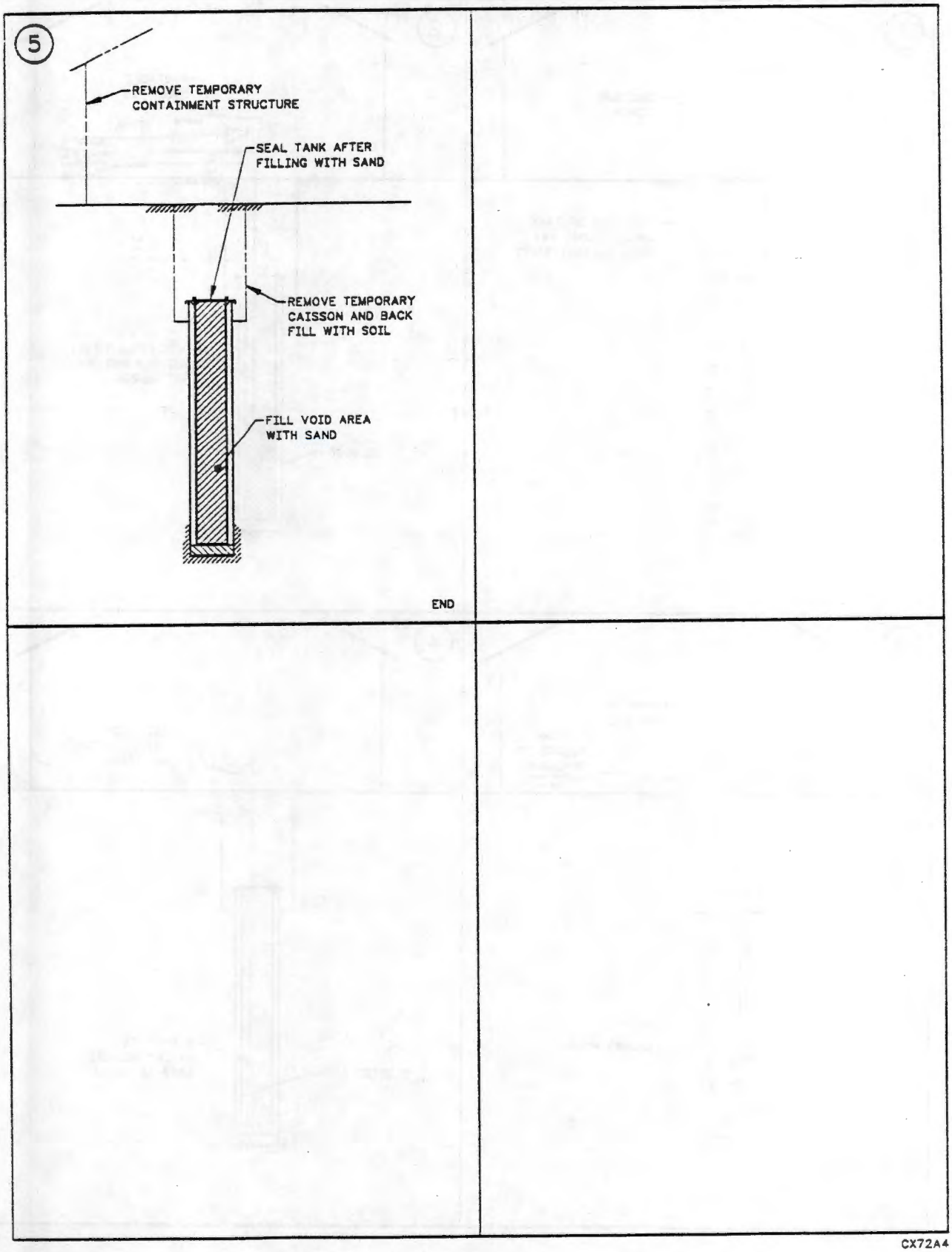

9111 8 9 4 0 6 4 7

Figure 5-6. Process Schematic of the Sludge Sluicing System.

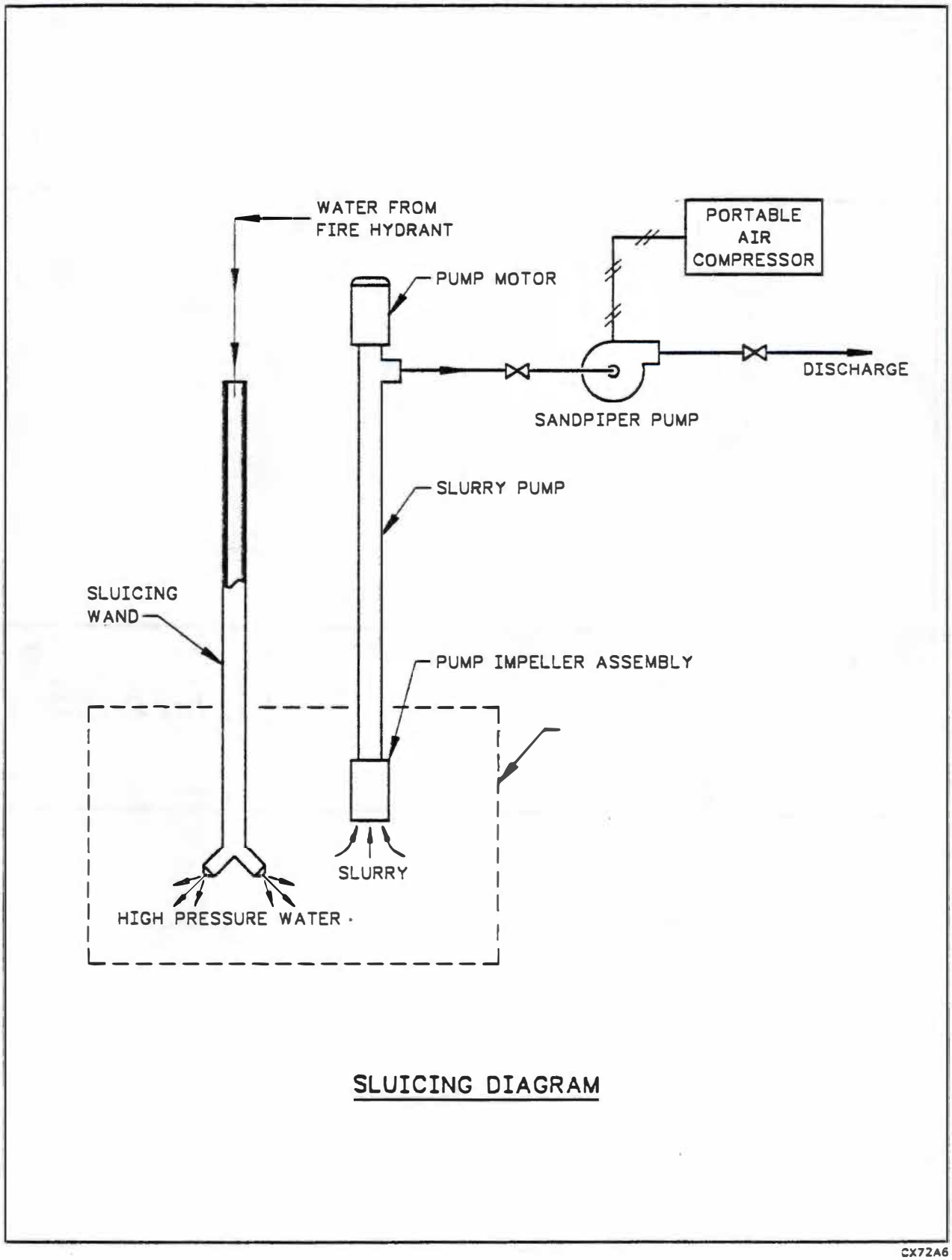

CX72A6

9 1 1 1 3 9 4 0 6 4 8

Figure 5-7, Sheet 1. Sluicing Sludge by Lifting the Tank into a Shielded Area.

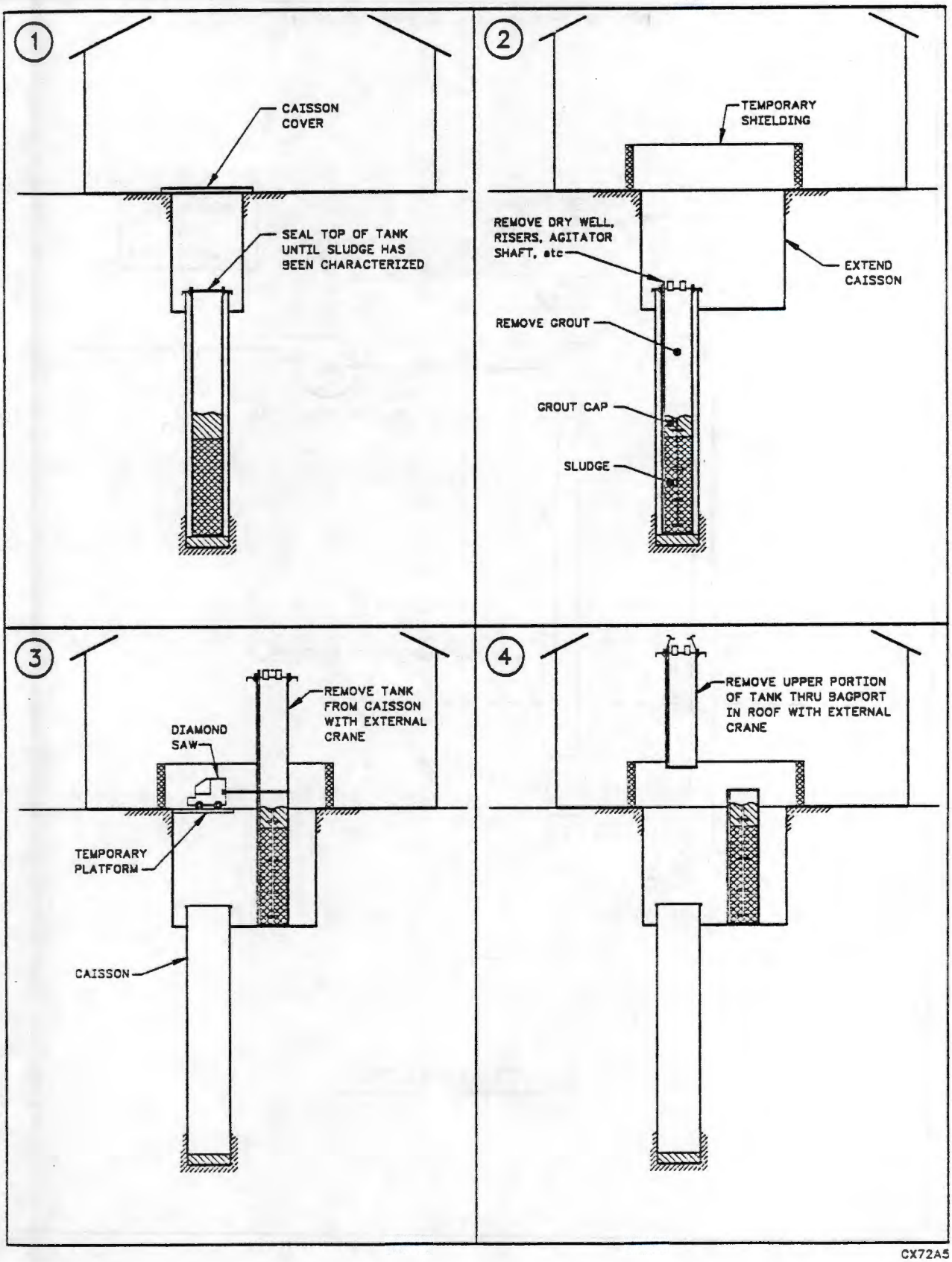

Figure 5-7, Sheet 2. Sluicing Sludge by Lifting the Tank into a Shielded Area.

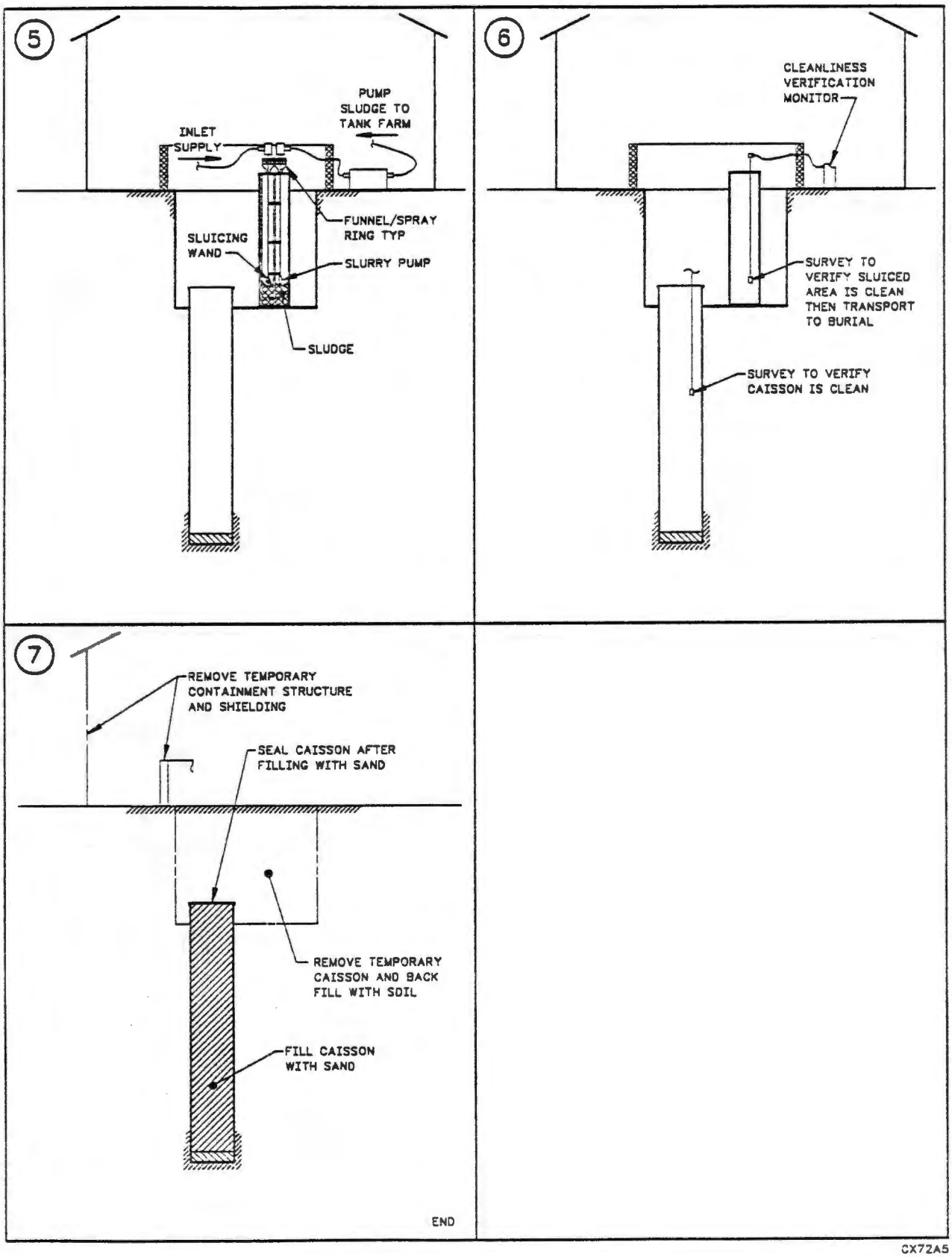

9111174065 0

Figure 5-8, Sheet 1. Transfer of Tank to T-Plant for Sludge Removal.

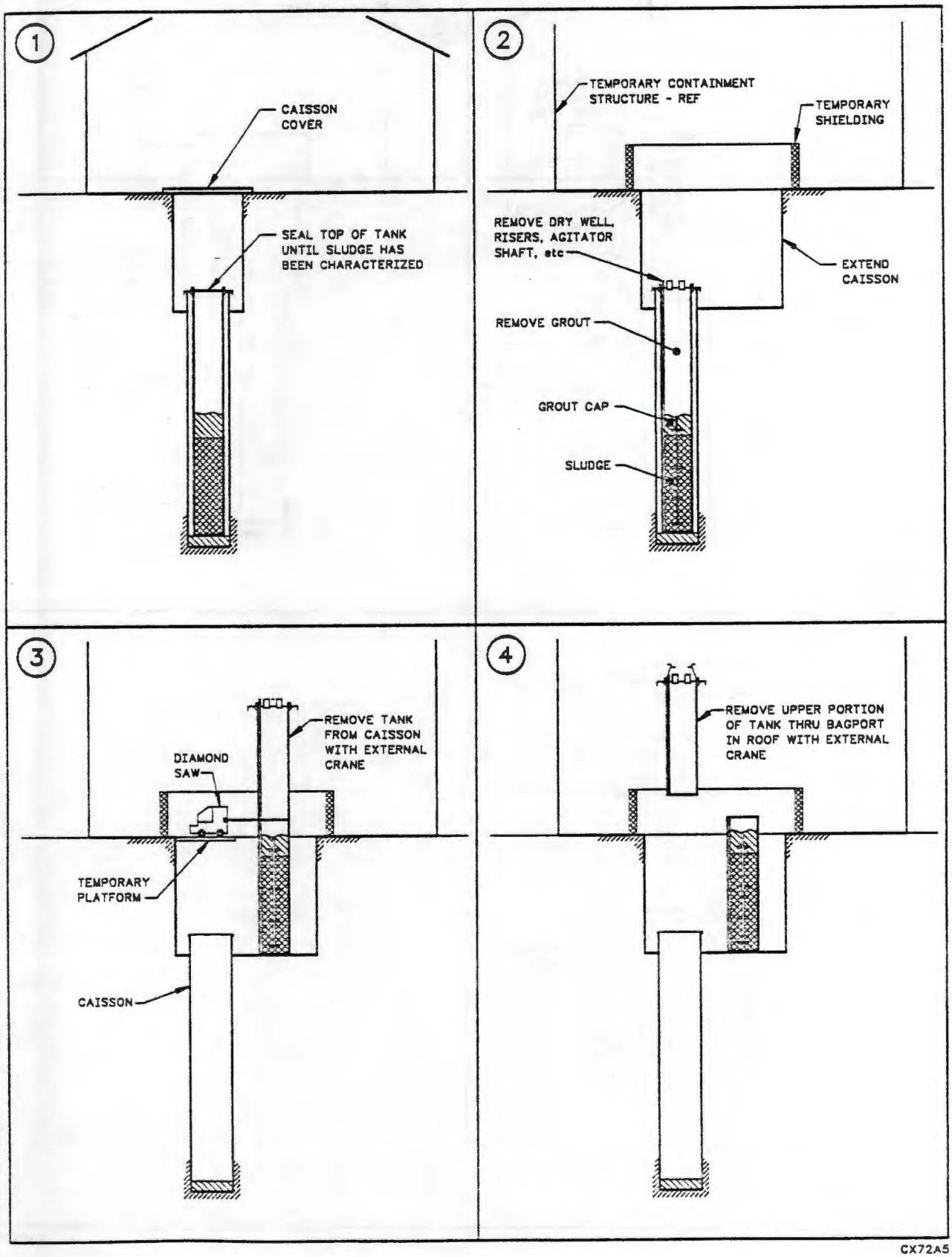

Figure 5-8. Sheet 2. Transfer of Tank to T-Plant for Sludge Removal.

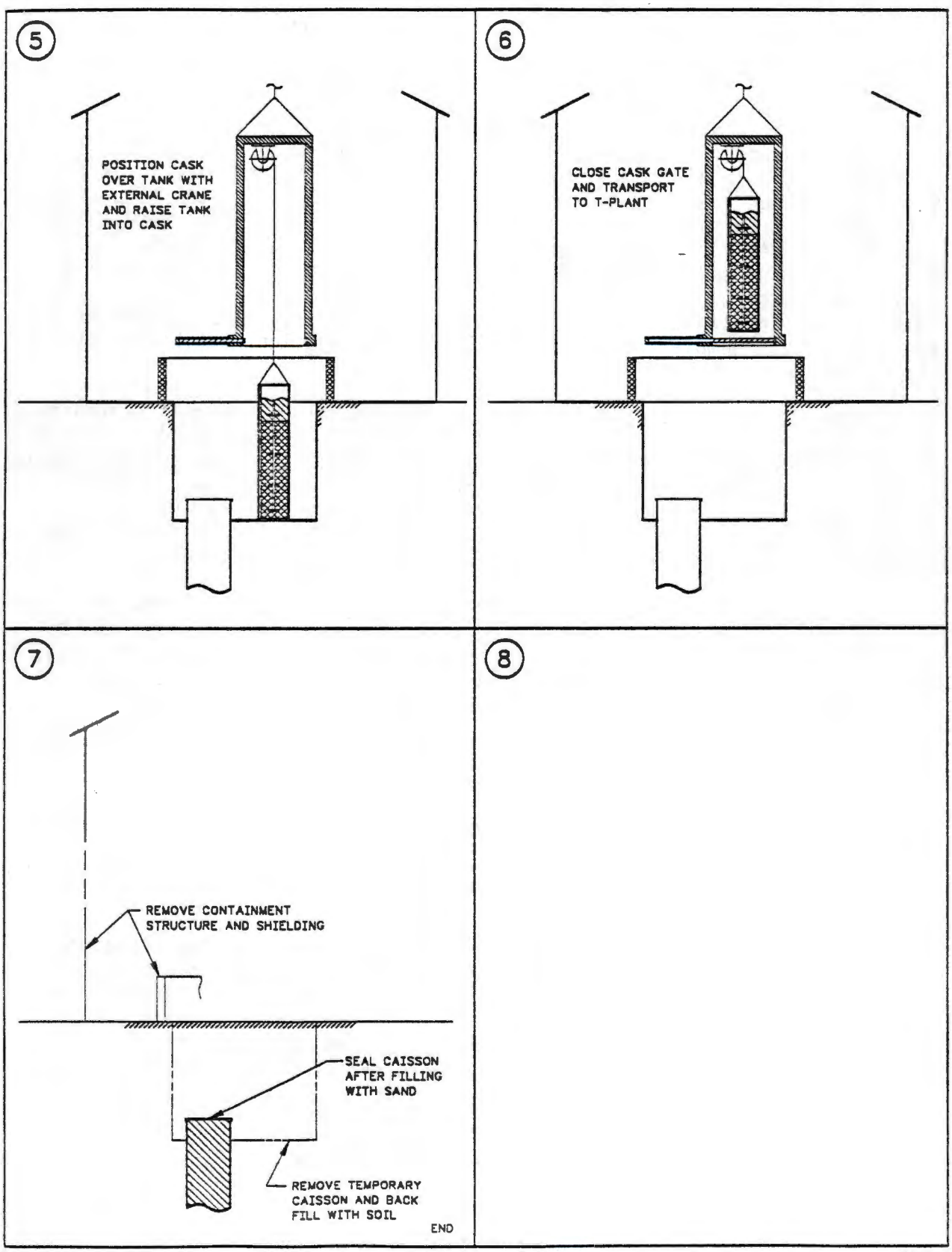

9 1 1 1 3 9 4 0 6 7 2

5.2 ASSESSMENT OF REGULATORY AND ENVIRONMENTAL CONSTRAINTS

Tank 241-CX-72 is listed in Appendix C, page C-13 of the "Tri-Party Agreement"[15] as a hazardous waste facility scheduled for closure in approximately 10 to 15 years. At that time, remediation of the site will be performed in accordance with either RCRA or CERCLA guidelines. Presently, the lead regulatory agency has not been established and it is not possible to identify the requirements under which the final closure must be performed. Since the sludge was placed in this tank in the 1950s, the tank is probably not within the purview of RCRA and WAC-173-303[16] since these regulations post-date the filling of the tank. However, if the tank is identified as a Solid Waste Management Unit (SWMU), it may be subject to RCRA corrective action provisions under 3008(h) or 3004(u). In such a case, however, the remedial action standards are less rigid than RCRA Subtitle C standards and they begin to resemble the CERCLA Remedial Investigation/Feasibility Study (RI/FS) process.

There is no set of criteria that defines the allowable modifications to an operable unit prior to initiation of the RI/FS. A basic element in the decision making process should be whether the decommissioning activity would disallow or impede implementation of the final remedial actions. Actions such as removal of wastes, tanks, or other structures, or removal of contaminated media such as soils, however, generally do not hinder future remedial actions and can usually be undertaken prior to the ROD.

It is considered good practice to notify appropriate agencies of actions that are being taken prior to a ROD in order to keep them informed and to provide a mechanism to respond to an action should they have any concerns. Good documentation should also be kept on the actions to provide data for incorporation into the RI/FS at a later date. Data should include information on the characterization and decommissioning of the unit along with any information that is obtained about environmental releases resulting from the unit.

If contaminated soil is found around the tank, an assessment should be made as to whether it is better to clean up soils immediately, because contamination is limited, or clean up should be deferred until after the ROD has been obtained.

The Regulatory Analysis Section of WHC is developing standard agency notification requirements and identification of the type of documentation that should be kept during decommissioning activities. This information is anticipated to be incorporated into the WHC Environmental Compliance Manual[17] during the next revision cycle. In the meantime, it is recommended that the Washington State Department of Ecology (WDOE) and the Environmental Protection Agency (EPA) be notified in writing at least 30 days in advance of the removal of the 241-CX-72 tank or its contents.

9 1 1 1 3 9 4 0 5 7 3

5.3 ASSESSMENT OF PRINCIPAL HAZARDS AND RISKS

No hazards and risks, other than those commonly encountered at Hanford, are expected. These hazards and risks include industrial accidents, loss of containment, loss of confinement, fires and chemical reactions, accidental nuclear criticality, and extrinsic occurrences that affect the decommissioning activity. These events will generally be controlled by a combination of physical barriers and administrative controls.

There is a possibility that combustible gasses may be present (primarily radiolytically produced hydrogen). However, because the sludge layer is probably dry, hydrogen generation, if it occurs at all, would occur primarily within the grout layer. The grout layer is believed to contain no large void areas, and is quite porous. These factors should prevent the accumulation of significant quantities of hydrogen.

The radiologic evaluation of the tank contents, has shown that the tank probably contains less than 200 g of plutonium,[2] and, as such, would not pose the risk of nuclear criticality. It is expected that these results will be confirmed upon completion of the sampling and analysis of the sludge layer during Phase 2.

Dry mining techniques have the inherent risk of releasing radioactive particulates. Water cannot be used to control dust generation within the tank up to the point at which the sludge material and tank have been analyzed. However, proper design and operation of the equipment should minimize the risk of releasing radioactive particulates.

There is the possibility that the grout contains appreciable quantities of TRU material, especially the grout that is close to the sludge layer. However, the risk of handling TRU contaminated grout can be minimized by carefully monitoring of the grout as it is being retrieved. Additionally, Phase 1 operations will cease either when a significant concentration of TRU is detected in the retrieved grout, or when all but an approximate 2 foot layer of grout remains on top of the sludge layer.

If the tank is determined to have failed, removal of the sludge via sluicing will be prohibited in order to reduce the potential for contamination release to the surrounding soil. Lifting of the tank containing just the sludge material also may not be feasible, depending on the integrity of the tank. There is, however, the risk that the integrity of the tank will be determined to be adequate for either sluicing in place or lifting, when in fact it is not. This factor, alone, may require the selection of a dry mining technique for Phase 3.

Phase 1 will not require any safety analysis documentation, other than what is normally required for work in a radiation zone (such as a Job Safety Analysis). The exhausted air will be sampled and continuously monitored for radioactive particulate material to ensure compliance with the as low as reasonably achievable (ALARA) philosophy. An RPT will be required to monitor all materials that are removed.

9 1 1 1 3 9 4 0 6 5 4

During the planning and Phase 1, Radiological Engineering will be called upon to help develop comprehensive monitoring, for ALARA, and sample transport system plans to ensure that no personnel exposures would exceed acceptable levels. These plans will allow Phase 2 to be completed without the development of a safety analysis document (SAD) or safety analysis report (SAR).

Facilities are classified as either being nuclear or non-nuclear. Nuclear facilities are required by the DOE to have a formal SAR prepared. Nuclear facilities, as defined in the Facility Safety Analysis Manual,[18] are those that 1.) fall into the moderate or high radioactive classes due to radionuclide inventories, 2.) contain liquid radioactive materials that could exceed permissible ground water concentrations if leaked to the environment, or 3.) are fissionable materials facilities. Until the sludge contained within Tank 241-CX-72 is properly characterized, the classification cannot be made. However, based on the radiation levels recently measured, it is assumed that the tank and its associated sludge retrieval process may have to be classified as a nuclear facility, and the work performed under Phase 3 will require a SAD or SAR. This report will be prepared in accordance with the requirements specified in the Nonreactor Facility Safety Analysis Manual.

The DOE requires operations to be reviewed and authorized according to the "Hazard Classification," and specifies the following review and authorization levels:[19]

Hazard	Review Level	Authorization Level
High	Field and/or Headquarters	Field and/or Headquarters
Moderate	Operating Organization Field, and/or Headquarters	Field and/or Headquarters
Low	Operating Organization	Operating Organization

Facilities are classified as posing "low," "moderate," or "high" hazard depending upon criteria that address onsite and offsite radiological dose potentials, and toxicological release in terms of onsite and offsite hazardous material concentration potential. Table 5-1 lists the criteria that are used for determining the facility hazard classification.

Until the sludge layer and tank structure are properly characterized, the hazard classification cannot be assigned. Prior to the initiation of Phase 3, a SAR or SAD will be prepared that identifies the proper hazard classification and authorizations. The implementing work procedures, radiation work permits and other safety/environmental procedures will be based upon the approved SAR/SAD.

If, after the completion of Phase 2, it is determined that the tank must be removed, there are three options available for transporting the tank: 1.) transportation of the empty tank as a self container; 2.) use of a failed equipment container; 3.) use of a container specifically designed and fabricated for transport of the tank. All three of these options will require the modification of an existing Safety Analysis Report for Packaging (SARP) or the preparation of a new SARP. In the worst case, that of

Table 5-1. Facility Hazard Classification Criteria.

Hazard Classification	Maximum Individual Consequences*	
	Onsite	Offsite
LOW - Could produce negligible impact to offsite environment.		
Radiological:	≤5 rem	≤0.5 rem
Toxicological:	≤STEL	≤TLV-TWA
MODERATE - Could produce considerable impact to the onsite environment.		
Radiological:	>5 rem, but ≤25 rem	>0.5 rem, but ≤5 rem
Toxicological:	>STEL, but ≤0.5 PG	>TLV-TWA, but ≤STEL
HIGH - Could produce significant levels of ground contaminations beyond the site boundary as a result of radioactive or toxic material releases.		
Radiological:	>25 rem	>5 rem
Toxicological:	>0.5 PG	>STEL

* Radiological criteria are expressed in terms of Effective Dose Equivalent (EDE). The corresponding organ dose equivalents are three times the EDE for the lens of the eye and ten times the EDE for all other organs. Toxicological criteria are abbreviated as follows: STEL - Short Term Exposure Limit; TLV - Threshold Limit Value; TWA - Time-Weighted Average. These terms are defined in Appendix A of the Nonreactor Facility Safety Analysis Manual.

9 1 1 1 8 9 4 0 6 5 6

preparing a new SARP, document issuance normally requires 9 to 12 months. If it is determined that the tank and sludge layer must be transported to a facility, it is assumed that a new package would be designed and fabricated and a new SARP would be required.

5.4 COST ESTIMATE AND SCHEDULE

Engineering, construction, and installation costs for Phases 1 and 2 of this option will be approximately $836,800. Phase 3 will cost between $277,900 and $713,500. The details of these cost estimates can be found in Appendix C. In addition to the costs listed above, funding to support the implementation of the preferred option would amount to $281,300. The details of this support funding are provided in Table 5-2. The total cost for completing the sampling and decommissioning of Tank 241-CX-72 would be between $1,396,000 and $1,832,000.

As shown in Figure 5-9, the minimum time required to complete decommissioning of Tank 241-CX-72 is 33 months. This schedule arbitrarily begins at the start of Fiscal Year 1990, and assumes optimum funding and completion of tasks. A more conservative schedule, which assumes longer times for task completion, is also shown in Figure 5-9. This pessimistic schedule requires 48 months to complete all tasks. Annual funding levels, which correspond to the optimistic schedule and the most expensive sludge retrieval option (removal of the tank and transfer to T-Plant for processing), are provided in Table 5-3.

The optimistic schedule shown in Figure 5-9 is constrained by the fact that sludge sampling and analysis is completed after grout retrieval. Early sampling of the sludge layer would add approximately $79,000 to the total cost. However, as shown in Figure 5-10, early sampling could shorten the schedule by as much as 10 months since the sludge retrieval equipment could be designed and fabricated concurrently with the sludge retrieval step. An estimate of the annual funding levels corresponding to this schedule is provided in Table 5-4.

9 1 1 1 3 9 4 0 6 5 7

Table 5-2. Expense Support Costs for Sampling and Decommissioning of Tank.

Description	Exempt Hours	Exempt Rate *	Nonexempt Hours	Nonexempt Rate *	Other ($ K)	Total ** ($ K)	Totals ($ K)
GENERAL INSTALLATION SUPPORT							
1.) QA Plan	80	43.74	20	21.22		4.5	
2.) Maintenance Plan	80	43.74	20	21.22		4.5	
3.) Operability Test Procedure Prep	160	43.74	80	21.22		9.9	
4.) Project Plan	240	43.74	20	21.22		12.5	
SUBTOTAL GENERAL SUPPORT							31.3
SAFETY/ENVIRONMENTAL DOCUMENTS							
1.) Environmental Evaluation	480	43.74	80	21.22		25.9	
2.) State/Federal Permits	80	43.74	20	21.22		4.5	
3.) Safety Analysis Report	1920	43.74	369	21.22		104.7	
4.) Criticality Safety Analysis	80	43.74	27	21.22		4.6	
SUBTOTAL SAFETY/ENVIRONMENTAL							139.7
OPERATING TECHNICAL DOCUMENTS							
1.) Operating Procedures	160	43.74	120	21.22		10.9	
2.) Criticality Specifications	80	43.74	13	21.22		4.3	
3.) Maintenance Procedures	80	43.74	60	21.22		5.4	
4.) Manuals							
Radiation Work Permits	120	43.74	40	21.22		7.0	
Emergency	120	43.74	40	21.22		7.0	
Accident Prevention Standards	80	43.74	20	21.22		4.5	
5.) Sampling and Analysis Procedures	160	43.74	80	21.22		9.9	
SUBTOTAL OPERATING DOCUMENTS							48.9
TRAINING/OPERABILITY TESTING							
1.) Training Plan Manual	160	43.74	27	21.22		8.6	
2.) Training Manuals	160	43.74	36	21.22		8.8	
3.) Operating Documents Support	160	43.74	160	30.26		13.5	
4.) Training Personnel Support	160	43.74	20	30.26		8.7	
5.) Operability Testing and Personnel Training	160	43.74	400	30.26		21.8	
SUBTOTAL TRAINING							61.4
TOTAL EXPENSE COSTS							281.3

* - Hourly Rates based on FY 1989 Equivalent Labor Rates dated 4/10/89 and include 18.3% for overhead, 18.5% for general and administrative, and 6.6% for service assessment.

** Total includes a Realization Factor of 87.7%

Figure 5-9. Preliminary Schedule for the Sampling and Decomnissioning of Tank 241-CX-72.

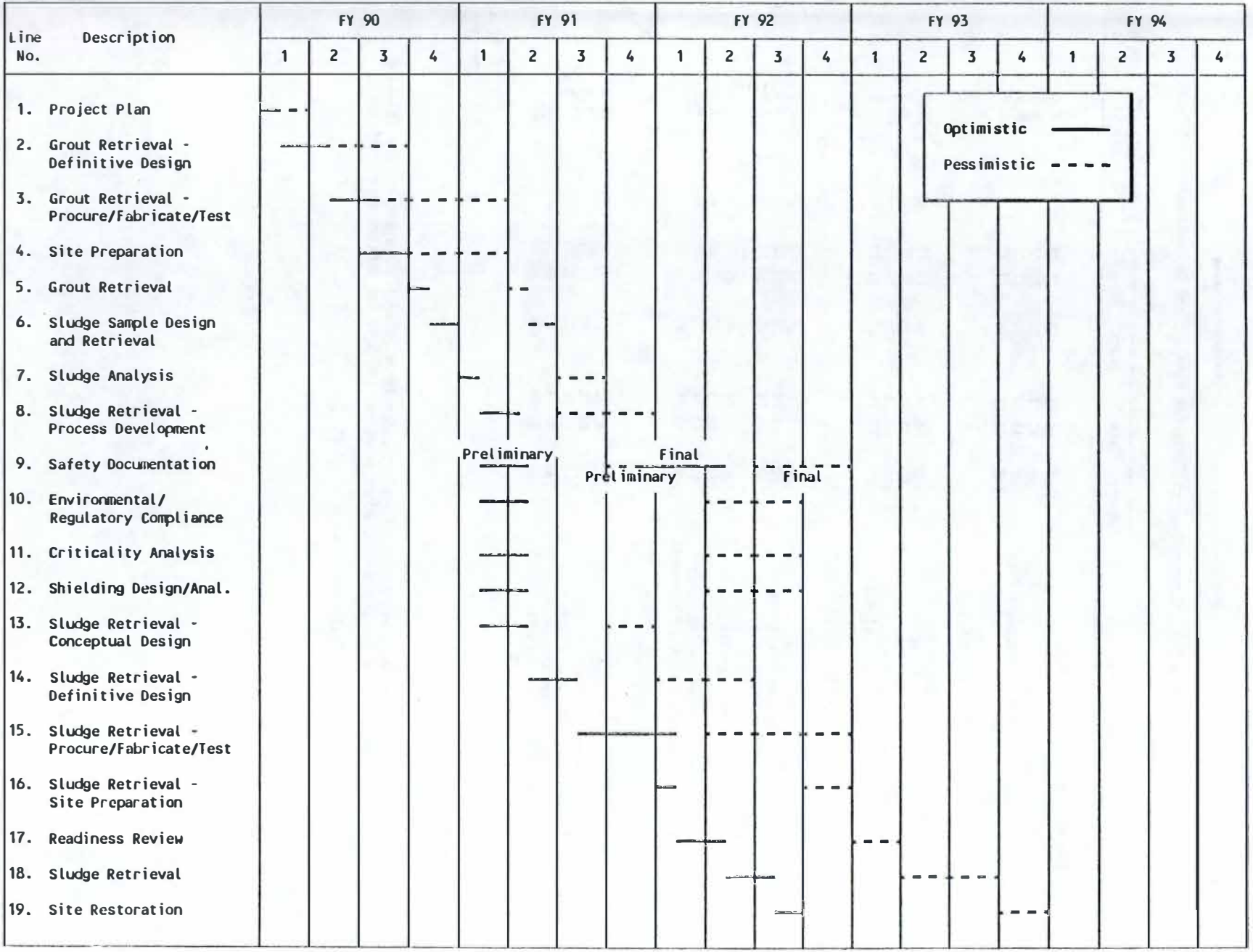

Table 5-3. Yearly Funding Levels Assuming Optimistic Schedule and FY 1991 Sludge Sampling.

	Fiscal Year 1990	1991	1992	1993	1994	TOTAL
PHASES 1 AND 2:						
1.) Characterize sludge	103,160					103,160
2.) Verify tank integrity	17,000					17,000
3.) Verify caisson integrity	8,000					8,000
4.) Excavation	20,600					20,600
5.) Containment Building	39,800					39,800
6.) Grout Mining Equipment	76,000					76,000
7.) Reseal tank after taking sludge samples		2,000				2,000
8.) Burial/Storage Containers	30,000					30,000
9.) Waste Transportation	1,600					1,600
Civil Engineering (25%)	74,540					74,540
Mechanical Engineering (40%)	119,264					119,264
G & A / CSP (26%)	127,911					127,911
Contingencies (35%)	216,956					216,956
PHASE 3:						
10.) Containment building			158,000			158,000
11.) Decommissioning equipment			30,600			30,600
12.) Decommission tank			65,600			65,600
Civil Engineering (25%)		42,367	21,183			63,550
Mechanical Engineering (40%)		67,787	33,893			101,680
G & A / CSP (26%)		54,526	54,526			109,052
Contingencies (35%)		92,484	92,484			184,969
SUPPORT COSTS:						
GENERAL INSTALLATION SUPPORT						
1.) QA Plan	4,474					4,474
2.) Maintenance Plan		4,474				4,474
3.) Operability Test Procedure Prep		9,916				9,916
4.) Project Plan	12,454					12,454
SAFETY/ENVIRONMENTAL DOCUMENTS						
1.) Environmental Evaluation		25,876				25,876
2.) State/Federal Permits		4,474				4,474
3.) Safety Analysis Report	34,894	34,894	34,894			104,683
4.) Criticality Safety Analysis		4,635				4,635
OPERATING TECHNICAL DOCUMENTS						
1.) Operating Procedures			10,884			10,884
2.) Criticality Specifications			4,313			4,313
3.) Maintenance Procedures			5,442			5,442
4.) Manuals						
Radiation Work Permits			6,953			6,953
Emergency			6,953			6,953
Accident Prevention Standards			4,474			4,474
5.) Sampling and Analysis Procedures	9,916					9,916
TRAINING/OPERABILITY TESTING						
1.) Training Plan Manual		2,875	5,750			8,625
2.) Training Manuals		2,947	5,894			8,841
3.) Operating Documents Support		4,500	9,000			13,501
4.) Training Personnel Support		2,890	5,780			8,670
5.) Operability Testing and Personnel Training		7,261	14,521			21,782
	896,570	363,907	571,146			1,831,623

Figure 5-10. Preliminary Schedule for the Sampling and Decommissioning of Tank 241-CX-72, with Early Sludge Characterization.

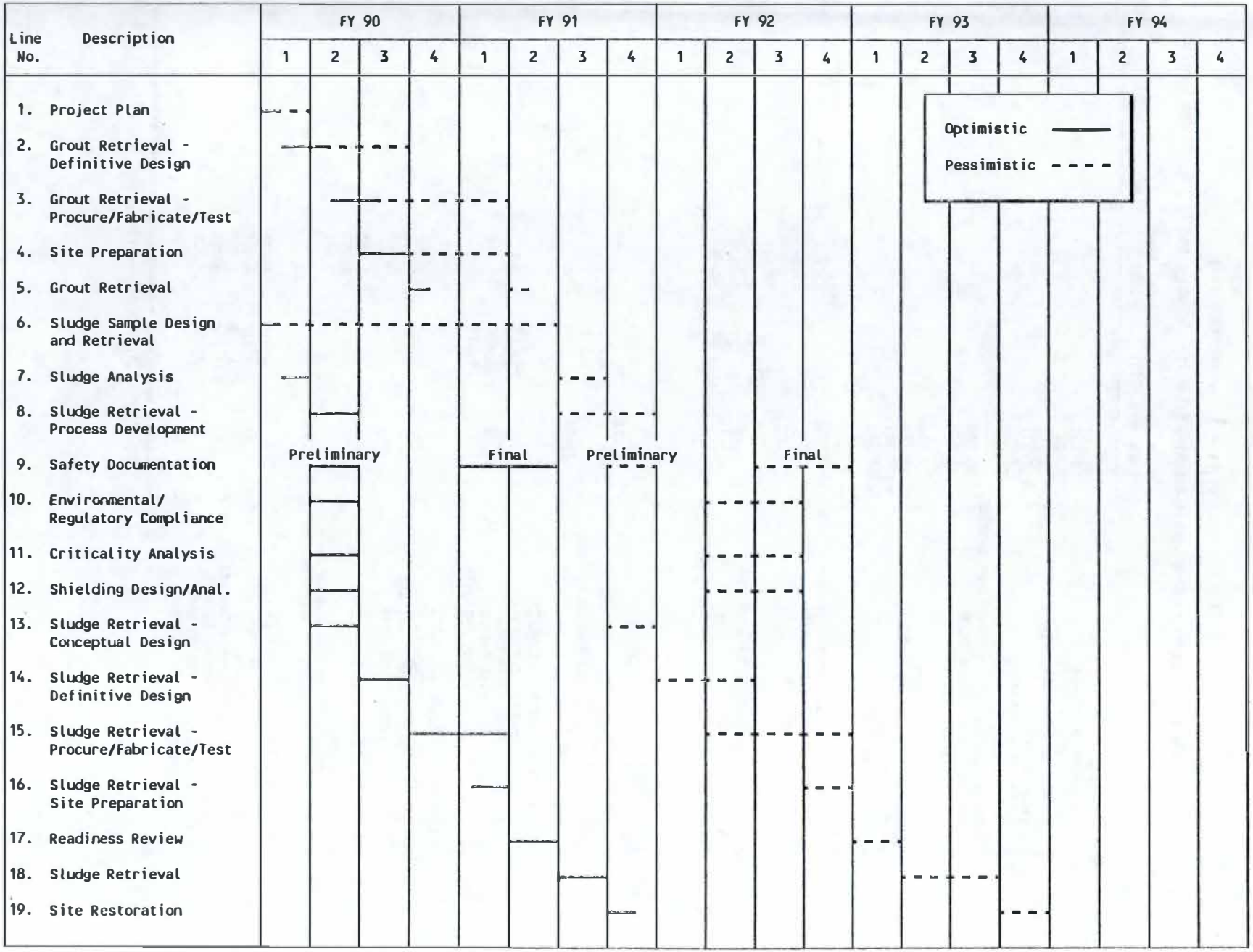

Table 5-4. Yearly Funding Levels Assuming Optimistic Schedule and FY 1990 Sludge Sampling.

	Fiscal Year 1990	1991	1992	1993	1994	TOTAL
PHASES 1 AND 2:						
1.) Characterize sludge	131,445					131,445
2.) Verify tank integrity	17,000					17,000
3.) Verify caisson integrity	8,000					8,000
4.) Excavation	20,600					20,600
5.) Containment Building	39,800					39,800
6.) Grout Mining Equipment	76,000					76,000
7.) Reseal tank after taking sludge samples	2,000					2,000
8.) Burial/Storage Containers	30,000					30,000
9.) Waste Transportation	1,600					1,600
Civil Engineering (25%)	81,611					81,611
Mechanical Engineering (40%)	130,578					130,578
G & A / CSP (26%)	140,045					140,045
Contingencies (35%)	237,538					237,538
PHASE 3:						
10.) Containment building	158,000					158,000
11.) Decommissioning equipment	15,300	15,300				30,600
12.) Decommission tank	32,800	32,800				65,600
Civil Engineering (25%)	63,550					63,550
Mechanical Engineering (40%)	101,680					101,680
G & A / CSP (26%)	54,526	54,526				109,052
Contingencies (35%)	92,484	92,484				184,969
SUPPORT COSTS:						
GENERAL INSTALLATION SUPPORT						
1.) QA Plan	4,474					4,474
2.) Maintenance Plan		4,474				4,474
3.) Operability Test Procedure Prep		9,916				9,916
4.) Project Plan	12,454					12,454
SAFETY/ENVIRONMENTAL DOCUMENTS						
1.) Environmental Evaluation	25,876					25,876
2.) State/Federal Permits	4,474					4,474
3.) Safety Analysis Report	34,894	69,789				104,683
4.) Criticality Safety Analysis	4,635					4,635
OPERATING TECHNICAL DOCUMENTS						
1.) Operating Procedures		10,884				10,884
2.) Criticality Specifications		4,313				4,313
3.) Maintenance Procedures		5,442				5,442
4.) Manuals						
Radiation Work Permits		6,953				6,953
Emergency		6,953				6,953
Accident Prevention Standards		4,474				4,474
5.) Sampling and Analysis Procedures	9,916					9,916
TRAINING/OPERABILITY TESTING						
1.) Training Plan Manual		8,625				8,625
2.) Training Manuals		8,841				8,841
3.) Operating Documents Support		13,501				13,501
4.) Training Personnel Support		8,670				8,670
5.) Operability Testing and Personnel Training		21,782				21,782
	1,531,282	379,727				1,911,009

9 1 1 1 8 9 4 0 5 3 2

5.5 REASONS FOR SELECTION

The retrieval option outlined in section 5.1.1 accounts for the fact that the sludge and tank must be characterized in order to resolve safety and environmental concerns, and to allow for the design of a process that will successfully retrieve the sludge. As the grout is being removed, the integrity assessment of the tank can also be performed.

The preferred method will essentially return the tank to the pre-1986 condition. Thus, by selecting the proposed three-phase approach, several alternatives for retrieval of the sludge can be considered, and the preferred method for implementing Phase 3 can be optimized.

6.0 ALTERNATIVE SAMPLING AND DECOMMISSIONING METHODS

This engineering study was commissioned to develop alternatives and recommend a preferred method for proceeding with waste sampling and decommissioning of Tank 241-CX-72. Sections 5.0 proposes the recommended course of action for decommissioning the tank. This section discusses several alternatives that, while they were considered feasible, are not recommended due to either high cost of implementation or to the uncertainty of the condition of the tank and its contents. Other decommissioning methods that were not considered feasible, are described briefly in Appendix D.

6.1 ALTERNATIVE DECOMMISSIONING METHODS - GENERAL DESCRIPTIONS

6.1.1 Alternative A - Mine Entire Contents (Dry Process)

6.1.1.1 Description. This method would involve removing both the grout and sludge from the tank using mining equipment. As shown in Figure 6-1, this option would be similar to the recommended method in that it would involve three phases of activity. However, there would be no design stage as part of Phase 2, and rock drilling equipment would be used to break up the sludge layer. Specification of rock drilling equipment is based on conservative assumptions as to the nature of the sludge. Until the sludge layer is fully characterized, a moderator, such as water, cannot be introduced into the system. Using the assumption that the sludge layer is very hard, a mining system capable of cutting through the sludge layer would be required for implementation of Phase 3.

As in the case of the preferred option, prior to grout retrieval, the structural integrity of the tank will be studied to the greatest extent possible. For example, it may be feasible to ultrasonically test the drywell wall and extrapolate these results to estimate the extent of corrosion of the tank walls. Visual inspection of the tank wall, as the grout is being removed, would also be performed.

Figure 6-1, Sheet 1. Alternative A - Mine Entire Contents (Dry Process).

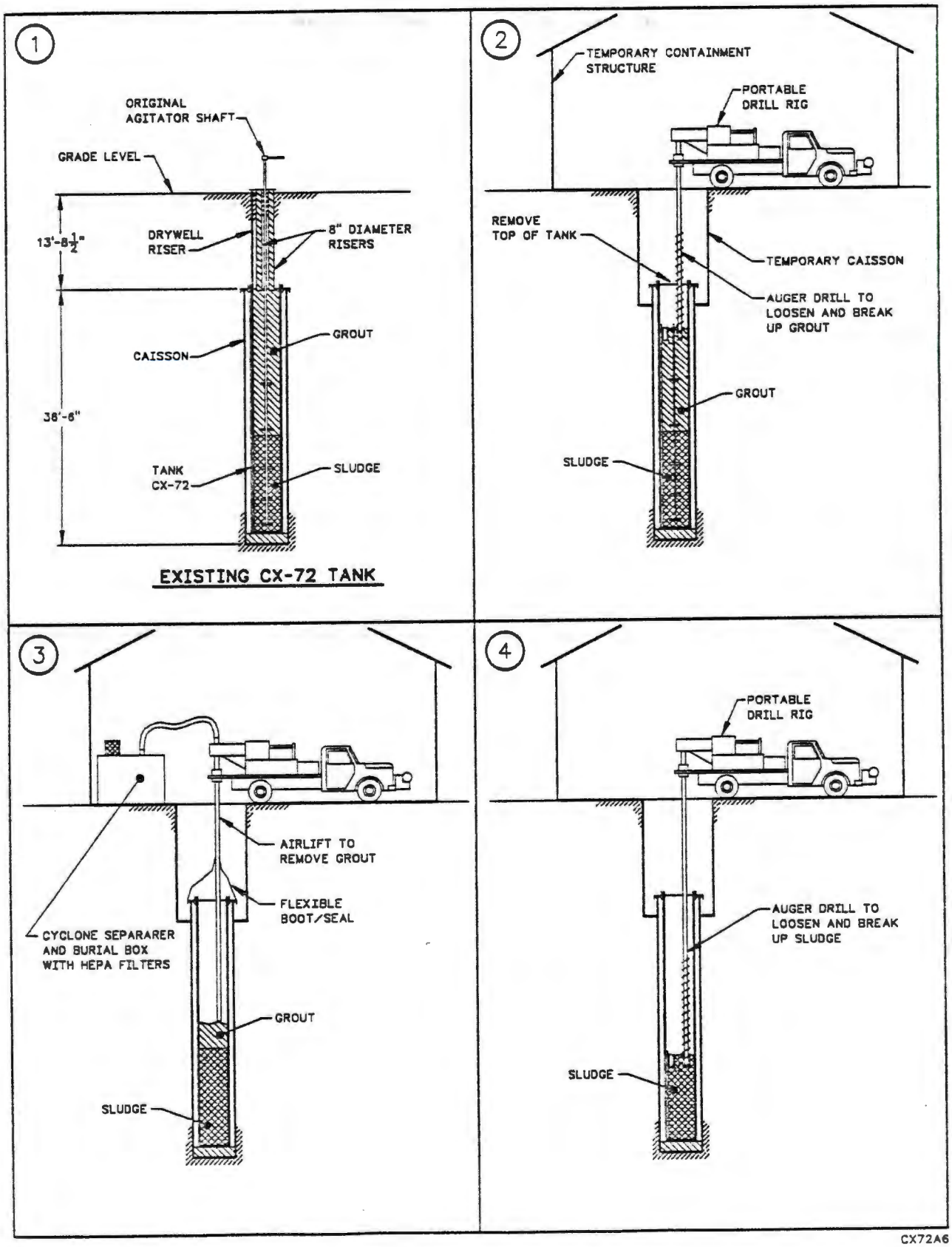

9 1 1 1 8 9 4 0 6 5 4

Figure 6-1, Sheet 2. Alternative A - Mine Entire Contents (Dry Process).

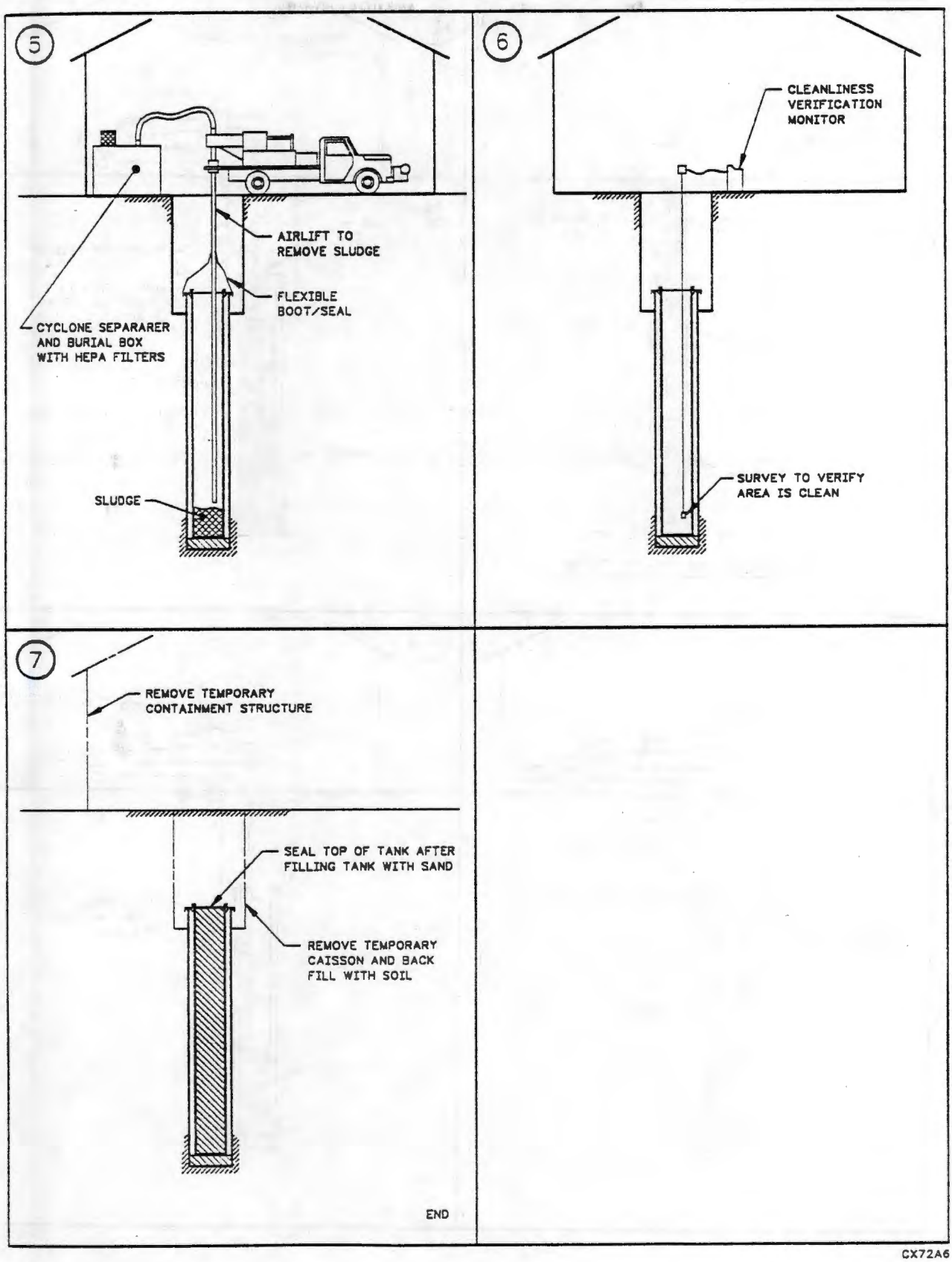

9111324065

The annulus between the caisson and tank would be inspected for tank leakage by swabbing the outer wall of the tank and checking the swabs for radioactive contamination. If contamination is found, a minimum of 3 soil samples taken around the outside of the caisson, and extending below the caisson would be used to inspect for leakage of the caisson.

Installation of a temporary 10 foot diameter caisson, extending from the present grade level to the top of 241-CX-72 would provide access to the top of the tank. A temporary enclosure with exhaust filtration would be placed above the excavation. The exhaust would be filtered through a two-stage HEPA filter configuration to protect the environment from radioactive contamination. Phase 1 would remove the grout from the tank through dry mining techniques. Continual monitoring of the ventilation exhaust, coupled with periodic sampling of the grout as it is retrieved, would ensure that none of the highly radioactive sludge is removed, and to determine if the grout contains hazardous materials. Drilling and vacuum methods would comprise the primary grout removal technique. The removed grout would be sampled, analyzed, and disposed of in an appropriate and acceptable manner[13]. Assuming that the grout contains no hazardous material, and contains radionuclide concentrations that are less than Class C, it would be packaged in 55-gallon drums and disposed of as low level radioactive waste.

Upon completion of Phase 1, Phase 2 would commence with the removal of core samples of the sludge as discussed in Section 5.1.3. Further inspection and analysis of the exposed tank wall would be performed, if necessary. The sludge samples would be characterized for its chemical and radiochemical constituents.

Phase 3 would be the actual process of sludge removal and site stabilization. Drilling and vacuum equipment would comprise the primary removal systems. After the tank contents have been removed and cleanliness (less than 100 nCi/g) verified, the empty tank would be filled in place with sand and then sealed. The area would then be backfilled to grade level.

6.1.1.2 Assessment of Regulatory and Environmental Impacts. No regulatory or environmental impacts, other than those discussed in Section 5.2, are anticipated.

6.1.1.3 Assessment of Principal Hazards and Risks. No hazards or risks, other than those discussed in Section 5.3, are anticipated.

6.1.1.4 Cost Estimate. Engineering, construction, and installation cost would be approximately $1,270,000. Details of the cost estimate may be found in Appendix C.

6.1.1.5 Reason for Dismissal. As discussed in Section 5.1, the preferred option for retrieval of the contents of Tank 241-CX-72 recommends a three-phase approach to the problem. The key feature of that recommendation is a hold point that allows for the specification and design of equipment tailored to the characteristics of the sludge and tank. The alternative method discussed in this section does not have this hold point and, as such, the equipment used for Phase 3 (retrieval of the sludge) must be specified and procured based on the very limited knowledge of the sludge and tank characteristics. The mining equipment would be designed to remove the sludge under the worst possible circumstances (a hard sludge layer that contains a concentration of fissionable material that would not permit the use of water).

9 1 1 1 3 9 4 0 6 3 6

It is probable that, upon characterization of the sludge layer, there is less than a fissionable quantity of plutonium present in the sludge. It is also possible that the sludge is not hard. Thus, as discussed in Section 5.1.4, a less expensive retrieval method, tailored to the characteristics of the sludge layer and tank, would have been precluded. Nevertheless, the alternative presented here is considered to be feasible from a technical standpoint. This alternative has the implicit risk that the equipment would not perform as required (necessitating re-design and delay of completion) or would be over-designed (representing an unnecessary cost). Assuming that the retrieval alternative proposed here actually would work as expected, the recommended option would probably require more time to implement. However, the consequences of either under-design or over-design of the sludge retrieval system are not considered to be acceptable.

6.1.2 Alternative B - Leave Grout in Place, Sluice Sludge

6.1.2.1 Description. This method would involve drilling a 6 inch hole through each of the two 8 inch diameter risers to the sludge level, core sampling the sludge and grout for characterization, installing a sluicing wand in one riser and a liquid removal pump in the other riser. As shown in Figure 6-2, the sludge would be sluiced out from under the grout and pumped through TK-003-CR in the 244-CR Vault to an underground million gallon double shell storage tank.

Installation of a temporary 10 foot diameter caisson, extending from the present grade level to the top of 241-CX-72 would provide access to the top of the tank. A temporary enclosure with exhaust filtration would be placed above the excavation. The exhaust would be filtered through a two-stage HEPA filter configuration to protect the environment from radioactive contamination.

The structural integrity of the tank must be verified prior sluicing. This might be accomplished by ultrasonic testing in the drywell to determine the extent of corrosion of the wall and then extrapolating these results to the tank walls. The annulus between the caisson and tank would be inspected for tank leakage by swabbing the outer wall of the tank and checking the swabs for radioactive contamination. If contamination is found, a minimum of 3 soil samples taken around the outside of the caisson, and extending below the caisson would be used to inspect for leakage of the caisson.

An encased line would be installed between 241-CX-72 and isolation point number 15 (see Drawing H-2-95501 in Appendix A) above ground and bermed for shielding, approximately 65 feet.

6.1.2.2 Assessment of Regulatory and Environmental Impacts. No regulatory or environmental impacts, other than those discussed in Section 5.2, are anticipated.

6.1.2.3 Assessment of Principal Hazards and Risks. The hazards and risks discussed in section 5.3 generally apply to this method. However, there is the additional risk that the grout does not have sufficient solidity and cohesion to withstand the removal of the sludge layer while leaving the grout in place.

9 1 1 1 3 9 4 0 5 3 7

Figure 6-2, Sheet 1. Alternative B - Leave Grout in Place, Sluice Sludge.

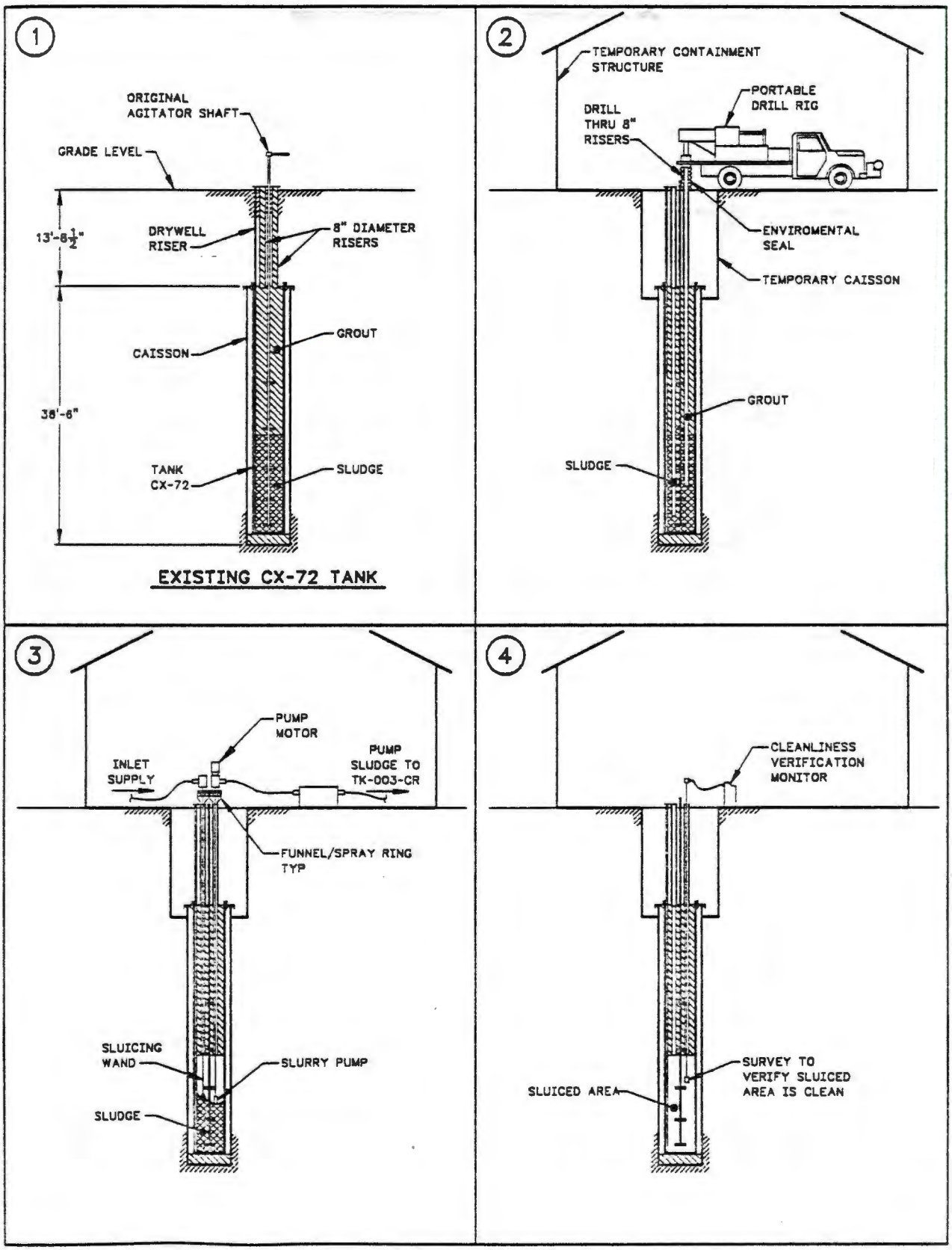

9111394064 8

Figure 6-2. Sheet 2. Alternative B - Leave Grout in Place. Sluice Sludge.

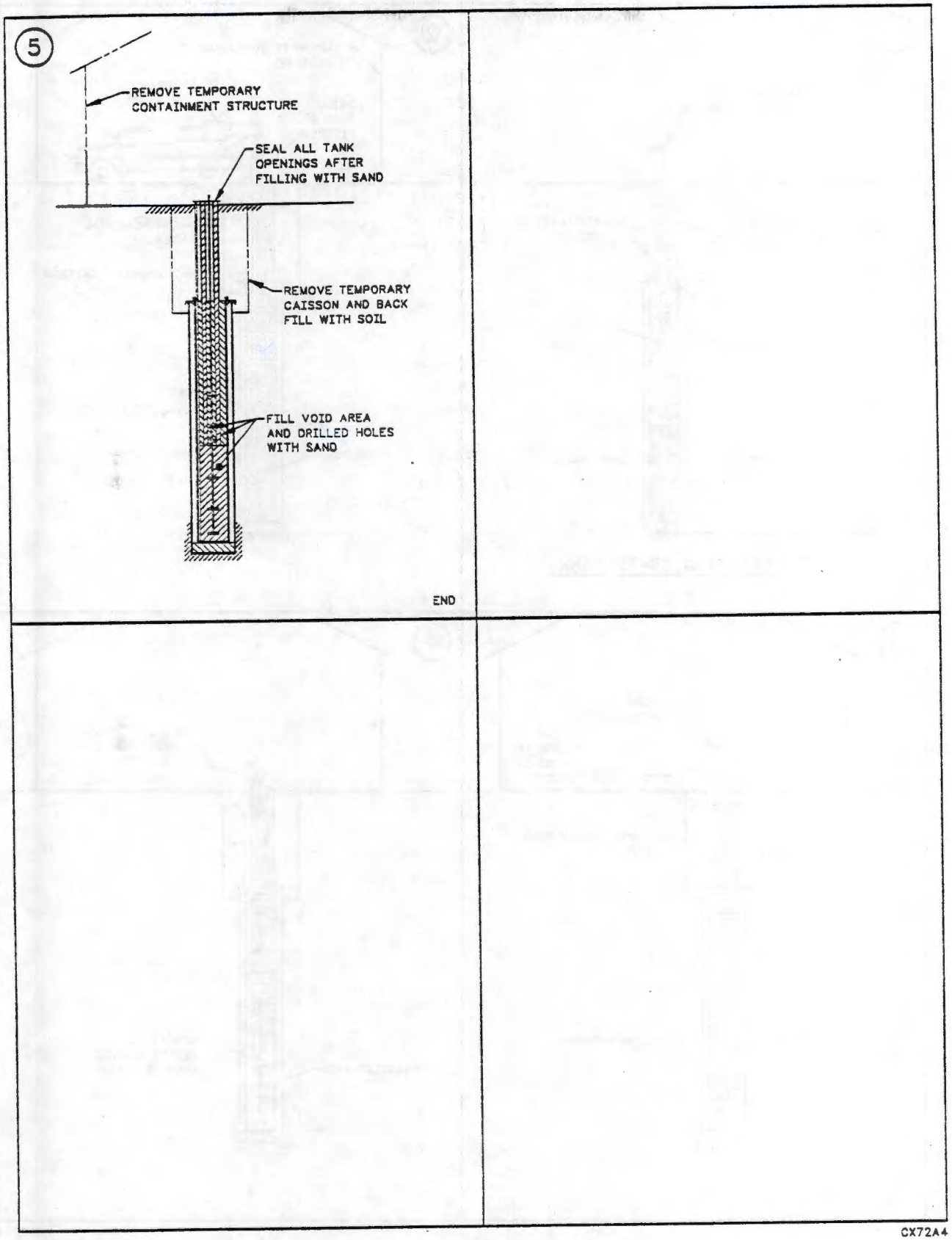

9111174063 9

6.1.2.4 Cost Estimate. Engineering, construction, and installation cost would be approximately $865,000. Details of the cost estimate may be found in Appendix C.

6.1.2.5 Reason for Dismissal. This method requires four conditions to be satisfied: 1.) The quantity and/or configuration of the fissionable material in the sludge must such be that a nuclear criticality is precluded if a moderator (water) is introduced into the system; 2.) The sludge layer must have the chemical and physical properties necessary for successful sluicing; 3.) The tank wall and bottom must have sufficient strength and integrity to allow the use of high pressure water; and 4.) The grout layer must have sufficient strength to remain in place during the sluicing process.

The first condition would probably be shown to be met. Radiologic characterization of the sludge layer indicates that it is likely that there is an insufficient quantity of plutonium present to pose a criticality threat (which must be confirmed through direct sampling and analysis of the sludge).

There is a fair degree of uncertainty regarding the second and third conditions because there is little information concerning the physical and chemical characteristics of the sludge layer or the integrity of the tank. Hence, there would be a moderate risk involved in the use of a sluicing system based on these uncertainties.

The best information available pertaining to the integrity of the grout is that it probably would not possess the strength needed to remain in place with the sludge layer removed. Although the sample of grout obtained from the top of the riser may not be representative of the bulk of the grout, it is at least consistent with the original specification of the grout.

This option is not recommended primarily because of the probable weakness of the grout. The uncertainty as to the tank integrity and characteristics of the sludge layer serves to reinforce this conclusion.

6.1.3 Alternative C - Leave Grout in Place, Mine Sludge

6.1.3.1 Description. Similar to Alternative B, this method would involve drilling a 6 inch hole through one of the two 8 inch diameter risers to the sludge level, core sampling the sludge and grout for characterization. As shown in Figure 6-3, the sludge would be would be loosened and broken up by augering several holes to the bottom of the tank. The sludge would then be airlifted from beneath the grout and placed into burial containers. The grout above the sludge would provide some shielding during sludge removal.

Installation of a temporary 10 foot diameter caisson, extending from the present grade level to the top of 241-CX-72 would provide access to the top of the tank. A temporary enclosure with exhaust filtration would be placed above the excavation. The exhaust would be filtered through a two-stage HEPA filter configuration to protect the environment from radioactive contamination.

6.1.3.2 Assessment of Regulatory and Environmental Impacts. No regulatory or environmental impacts, other than those discussed in Section 5.2, are anticipated.

9 1 1 1 3 7 4 0 4 5 7 0

Figure 6-3, Sheet 1. Alternative C - Leave Grout in Place, Mine Sludge.

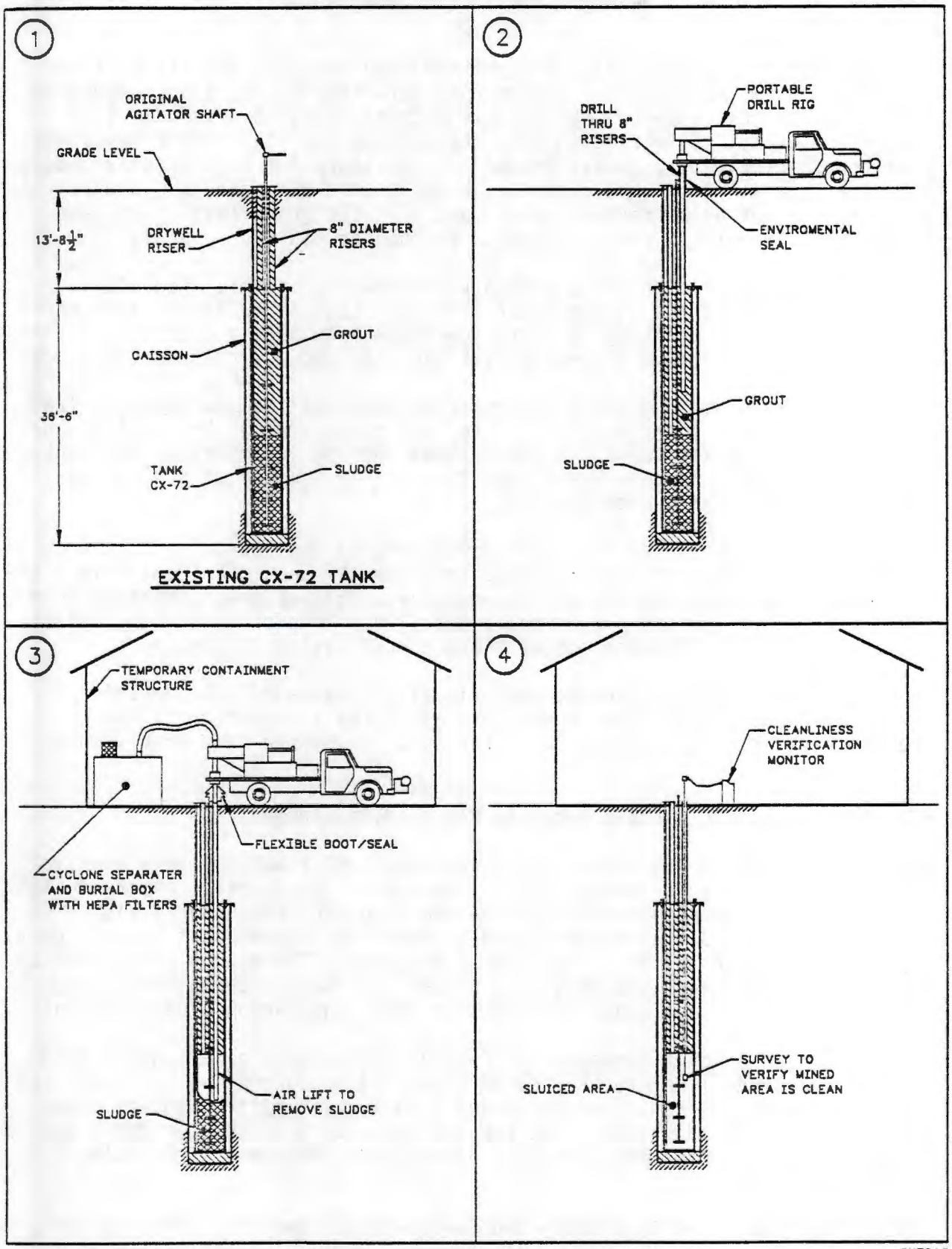

Figure 6-3, Sheet 2. Alternative C - Leave Grout in Place, Mine Sludge.

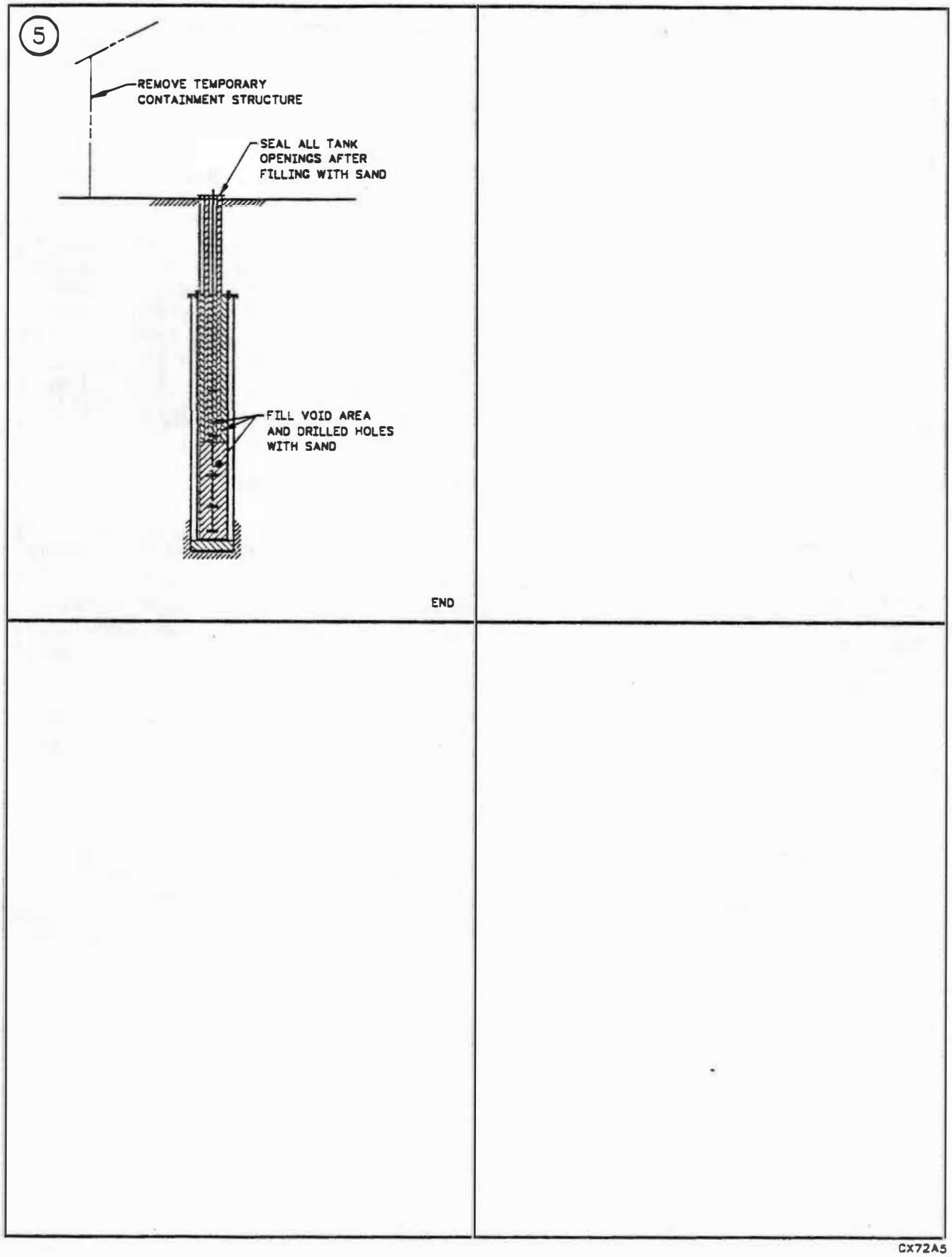

9 1 1 1 8 9 4 0 6 7 2

6.1.3.3 Assessment of Principal Hazards and Risks. The hazards and risks discussed in section 5.3 generally apply to this method. However, there is the additional risk that the grout does not have sufficient solidity and cohesion to withstand the removal of the sludge layer while leaving the grout in place.

6.1.3.4 Cost Estimate. Engineering, construction, and installation cost would be approximately $1,268,000. Details of the cost estimate may be found in Appendix C.

6.1.3.5 Reason for Dismissal. As in the case of Alternative B, this option is not recommended primarily because of the probable weakness of the grout. It is likely that the grout would not possess the strength needed to remain in place with the sludge layer removed. A secondary consideration is the efficacy of removing the sludge from a distance of 35 or more feet. If the sludge is very hard, it is probable that several holes through the grout layer would be required. As a result, the strength of the grout would be further diminished and this option would begin to resemble Alternative A.

6.1.4 Alternative D - Sluice Entire Contents (Wet Process)

6.1.4.1 Description. As shown in Figure 6-4, this method involves drilling a 6 inch hole through each of the two 8 inch diameter risers to the sludge level, sampling the sludge and grout for characterization, installing a sluicing wand in one riser and a liquid removal pump in the other riser. The grout and sludge would be sluiced out of the tank and pumped through TK-003-CR in the 244-CR Vault to an underground million gallon double shell storage tank.

A temporary enclosure with exhaust filtration would be placed at the top of the risers. The exhaust would be filtered through a two-stage HEPA filter configuration to protect the environment from radioactive contamination.

The annulus between the caisson and tank would be inspected for tank leakage by swabbing the outer wall of the tank and checking the swabs for radioactive contamination. If contamination is found within the caisson, which would be indicative of tank leakage, a minimum of 3 soil samples taken around the outside of the caisson, and extending below the caisson would be used to inspect for leakage of the caisson.

Verification of the structural integrity of the tank might be accomplished by ultrasonic testing in the drywell to determine the extent of corrosion of the wall and then extrapolating these results to the tank walls. Visually inspecting the tank wall as the contents are being removed would also be possible.

An encased line would be installed between 241-CX-72 and isolation point number 15 (see Drawing H-2-95501 in Appendix A) above ground and bermed for shielding, approximately 65 feet.

6.1.4.2 Assessment of Regulatory and Environmental Impacts. No regulatory or environmental impacts, other than those discussed in Section 5.2, are anticipated.

9 1 1 1 3 7 4 0 5 7 3

Figure 6-4. Sheet 1. Alternative D - Sluice Entire Contents (Wet Process).

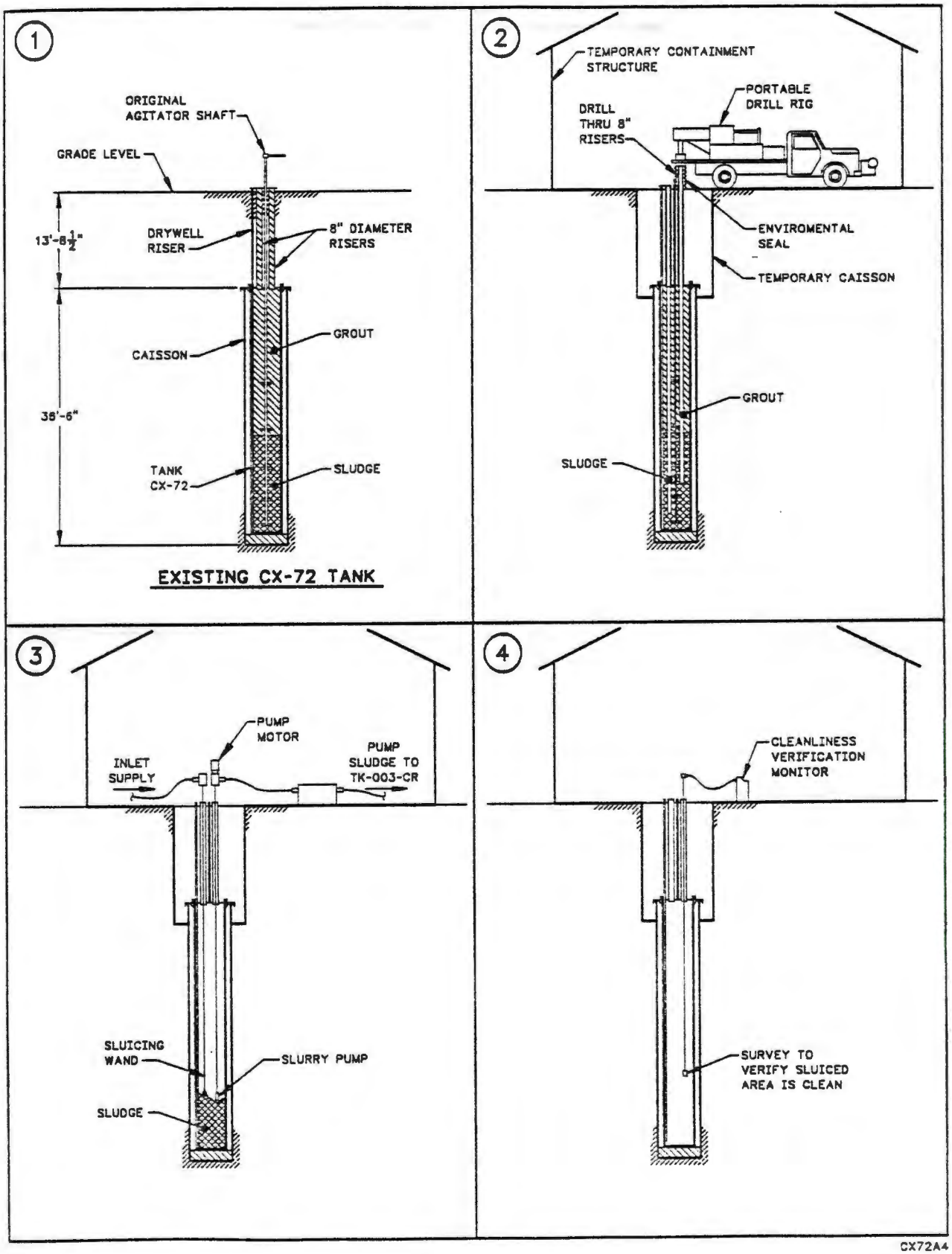

9111139406574

Figure 6-4. Sheet 2. Alternative D - Sluice Entire Contents (Wet Process).

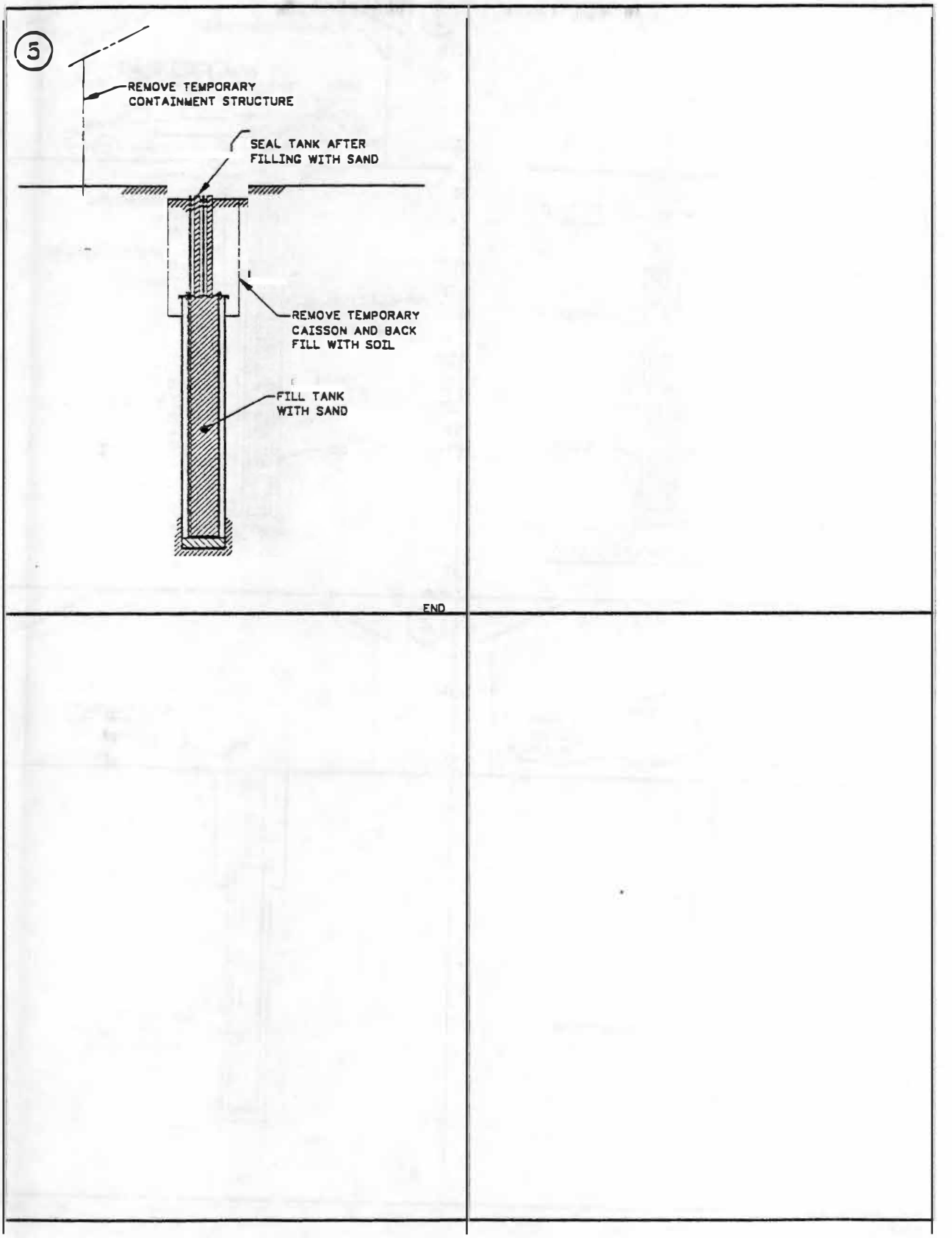

9111894067 5

6.1.4.3 Assessment of Principal Hazards and Risks. No hazards or risks, other than those discussed in Section 5.3, are anticipated.

6.1.4.4 Cost Estimate. Engineering, construction, and installation cost would be approximately $890,000. Details of the cost estimate may be found in Appendix C.

6.1.4.5 Reason for Dismissal. This method requires four conditions to be satisfied. The first three conditions are identical with those discussed in Section 6.1.2.5. However the fourth condition requires that the grout layer to have the physical properties necessary for successful sluicing.

Similar to Alternative B, the first condition would probably be shown to be met, and the ability to meet the second and third conditions is questionable. The fourth condition, would probably be met, however.

This option is not recommended primarily because of the uncertainty as to the tank integrity and characteristics of the sludge layer. An additional concern is that a relatively large volume of low- or non-radioactive waste (grout) would be added to the double-shell tank inventory. Large chunks of grout would probably interfere with equipment such as pumps.

6.1.5 Alternative E - No Action

6.1.5.1 Description. This option would leave the tank in place in its current configuration. Periodic monitoring of the tank and surrounding area would be performed to ensure that the tank and contents do not pose a radiological hazard.

6.1.5.2 Assessment of Regulatory and Environmental Impacts. Provided that the tank has not leaked, no regulatory or environmental impacts, other than those discussed in Section 5.2, are anticipated. However, eventual retrieval of the waste would be required prior to closure of the site in 10 to 15 years.

6.1.5.3 Assessment of Principal Hazards and Risks. There would be little risk from a safety standpoint. Environmentally, this option is not attractive since it essentially involves near surface disposal of transuranic waste which, although not strictly prohibited by the HDW-ROD, appears to be contrary to the intent of the HDW-ROD.

6.1.5.4 Cost Estimate. The cost for this option would have no incremental impact on current budgets.

6.1.5.5 Reason for Dismissal. This option would be the least expensive. However, this option would require that the sludge material, which is probably TRU waste, would remain in its present configuration, in a tank of unknown integrity, for an indefinite period.

6.2 ALTERNATIVE GROUT RETRIEVAL METHODS

In addition to the grout retrieval method recommended in Section 5.1.1, there were four alternative methods for grout retrieval that were considered to be feasible. As in the case of the recommended method, each of these alternatives requires the excavation to the top of the tank and the

9 1 1 1 3 9 4 0 5 7 6

installation of a 10 foot diameter riser, weather tight containment building, and HEPA filtration of the containment building exhaust. The top of the tank would be cut open using a torch. Those portions of the drywell, risers, and dip tubes that extend above the tank would be cut off and capped. After removing all but approximately 2 to 3 feet of grout above the sludge, the sludge would be sampled and the tank sealed until sludge retrieval is ready to proceed.

Radiation protection technologists would monitor all of the activities required to remove the grout. In particular, the material removed from the tank would be monitored for high levels of radioactive contamination. The four alternative grout removal methods are outlined in the following sections.

6.2.1 Encased Auger/Airlift

A flexible seal would be installed to the top of the caisson at the concrete floor and the encased auger/airlift would be inserted through this flexible seal. The encased auger would be similar to that discussed in Section 5.1.4.1.

Advantages:

The grout can be removed from the tank and deposited into burial boxes with a self contained system. The auger and grout removal components are incorporated into one piece of equipment which can be used with onsite drilling rigs.

Disadvantage:

There is the possibility of an accidental discharge to the environment. Operation of the system at a slight vacuum will be necessary to prevent this from happening.

6.2.2 Mechanical Clamshell/Scoop

This concept involves the use of a remotely operated clamshell or scoop, as shown in Figure 6-5. An auger would first be used to break up the grout into chunks. The clamshell device would be equipped with an extendable, retractable, articulating boom/arm capable of extending from the surface, down to the bottom of the tank (approximately 50 feet). The device would have the capacity to remove 1 to 2 cubic feet of grout in one scoop (grout weights approximately 100 pounds/cubic foot). The grout would be brought to the surface and placed into a concrete box for burial.

Advantage:

Grout can be removed from the tank with a minimum of disturbance.

Disadvantage:

A high cost would be expected for remote operated mechanical equipment of this type.

9 1 1 1 1 7 4 0 6 7 7

Figure 6-5. Removal of Grout Layer Using a Clamshell Device.

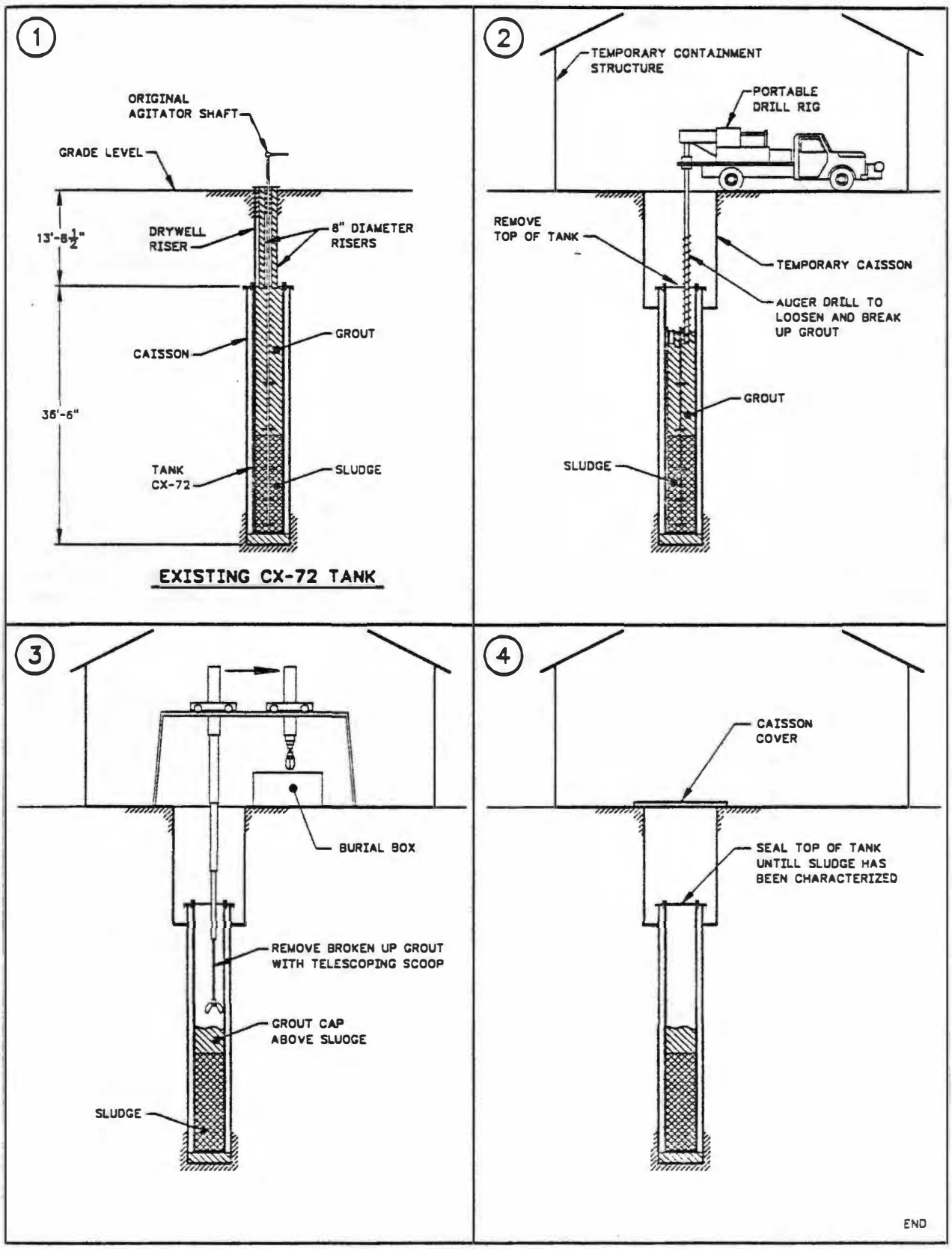

6.2.3 Mobile Vacuum System

This concept involves the use of the onsite mobile vacuum system (MVS). An auger would first be used to loosen and break up the grout. The grout would be drilled with a series of 1 foot diameter x 20 feet deep holes at various locations. A flexible boot/seal would be installed to the top of the caisson at the concrete floor and penetrate boot/seal with the mobile vacuum system's suction hose. Using the MVS, shown in Figure 6-6, the grout would be vacuumed from the tank in four foot deep increments, and deposited into the mobile vacuum system tank, and then discharged into a concrete burial box. This MVS would be operated in accordance with procedure No. TO-020-550. The concrete burial box is sealed and contains HEPA filters which would be sealed after filling for burial.

Advantage:

The MVS and drilling rigs are located onsite.

Disadvantage:

The exposure rate must be less than 200 mR/hr at the surface of the burial box. The MVS is used for a variety of purposes, it is restricted to use in areas where wastes have a TRU concentration of less than 10 nCi/g. The removal of grout in the lower portion of the tank may over expose the equipment and personnel. The lower portion of the grout would not be removed from the tank due to the limitation of a vacuum at those vertical distances.

6.3 ALTERNATIVE SLUDGE SAMPLING METHODS

The recommended method of sampling is applicable only to those options wherein the grout is first removed. If it is desired to characterize the waste prior to initiating retrieval of the grout, the sampling method becomes slightly more complex and costly. The follow are brief descriptions of the alternative sampling methods that were considered:

1.) Drill around actuator pipe/rod located in the center of the tank, which extends to the bottom of the tank, and remove. This sample could be used to perform the required analyses of the grout. The retrieved metal from the paddles would be analyzed for corrosion and this information would be extrapolated to estimate corrosion of the tank wall. This operation would be best accomplished by using a 4 to 6 inch diameter hollow drill with internal flights that moves the drilled material to the surface. This drill is currently in experimental design. An existing hollow drill without the flights can be used, although the drilling time would be longer. A second core sample of the sludge layer would be required, which would necessitate drilling through the grout in a separate location.

2.) Horizontally drill through lower portion of the drywell into suspected TRU area of tank and retrieve sample specimens. This option would eliminate the expense of drilling through approximately 20 feet of grout, but would compromise the integrity of the bottom of the tank which would not be acceptable from an environmental perspective.

9111120406 79

Figure 6-6. Mobile Vacuum System.

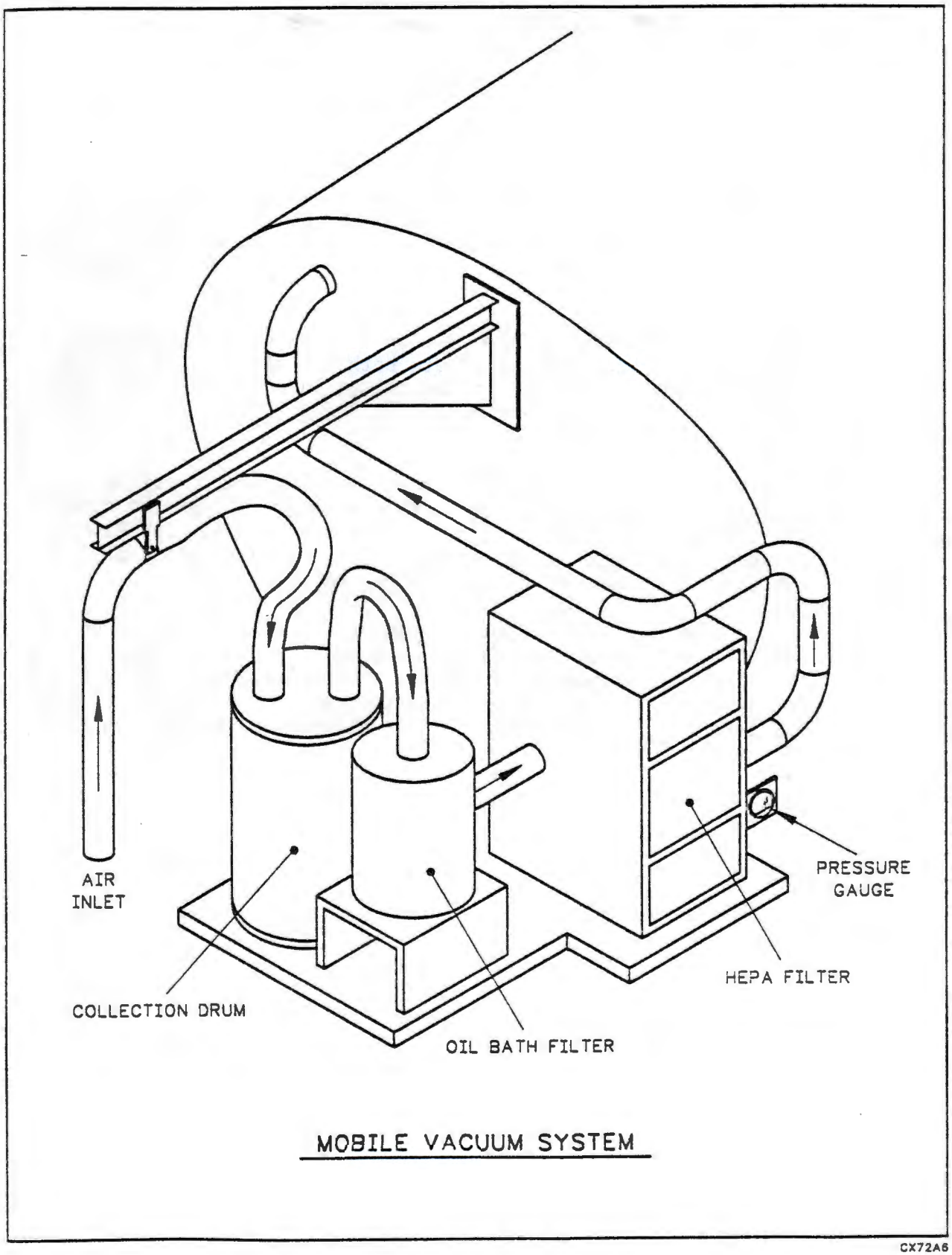

9111174065 0

3.) Inject chemicals (acid) into the 3 inch diameter drywell to dissolve the wall and bottom. Retrieve the sludge from bottom of tank for analysis. The debris contained in the bottom of the drywell would have to be removed prior to injecting chemical. This method violates the criterion that no liquids be injected into the tank until the sludge layer is fully characterized.

4.) Insert gamma and neutron detectors into the drywell with and without a directional window. Obtain radiation dose rates and neutron flux measurements the length of the tank. This method would not allow full characterization of the sludge layer because it would not detect hazardous chemicals, and it cannot distinguish neutron emitting isotopes.

5.) Excavate the outside of the caisson to a depth of approximately 45 feet, then horizontally penetrate both the caisson and the tank wall, and obtain a sample of the sludge layer. This would have the same disadvantage as alternative 2 in addition to costing more.

6.) Remove the drywell from tank and section into short pieces. Analyze waste material clinging to the outer wall of the drywell. The drywell may be difficult to remove due to grout cohesion between the drywell and tank wall, also the possibility of rupturing the tank wall exists during removal.

7.) With a sampling swab, access the two dip tubes located in one of the 8 inch risers. Analyze the swab for sludge contents. It is believed that one dip tube extends to the bottom of the tank and the other tube is near the top of the tank. However, no drawing has been located that indicates the dimensions and configuration of the dip tubes.

9 1 1 1 3 9 4 0 6 7 1

7.0 REFERENCES

1. Radiation Survey Report #25533, Westinghouse Hanford Company, Richland, WA, October 31, 1988.

2. V. B. Subrahmanyam, "Radiological Evaluation of Hot Semiworks Tank 241-CX-72," WHC-SD-CP-TI-148, Westinghouse Hanford Company, Richland, WA, June 1989.

3. "Disposal of Hanford Defense High-Level, Transuranic, and Tank Wastes, Hanford Site, Richland, Washington; Record of Decision," Federal Register Volume 53, Page 12449, April 8, 1988.

4. "Final Environmental Impact Statement - Disposal of Hanford Defense High-Level, Transuranic and Tank Wastes," DOE/EIS-0113, U.S. Department of Energy, Washington, DC, December 1987.

5. "Radioactive Waste Management," DOE Order 5820.2A, U.S. Department of Energy, Washington, DC, September 26, 1988.

6. 10 CFR 61.55, "Waste Classification," January 1, 1988.

7. "Nuclear Criticality Safety Manual" WHC-CM-4-29, Westinghouse Hanford Company, Richland, WA, September 15, 1988.

8. T. C. Mackey, "Waste Tank 241--CX-72 Structural Analysis (Study Phase)," WHC-SD-DD-DA-002, Westinghouse Hanford Company, Richland, WA, July 1989.

9. Letter, D. G. Harlow to J. A. Teal, "Disposition and Isolation of Tanks 270-E-1, 270-W, 241-CX-70, 241-CX-71, and 241-CX-72," Atlantic Richfield Hanford Company, Richland, WA, July 2, 1974. [A copy of this letter may be found in Appendix B].

10. Letter, G. Burton Jr. to O. J. Elgert, "Waste Tank Survey," Atlantic Richfield Hanford Company, Richland, WA, June 2, 1976. [A copy of this letter may be found in Appendix B].

11. Letter, C. W. Malody to O. J. Elgert, "Waste Tank Survey," Atlantic Richfield Hanford Company, Richland, WA, November, 1976. [A copy of this letter may be found in Appendix B].

12. J. E. Cummings, "Tank 241-CX-72 Preliminary Waste Characterization," WHC-SD-DD-TI-040, Westinghouse Hanford Company, Richland, WA, June 30, 1989.

13. R. G. Stickney, "Hanford Radioactive Solid Waste Packaging, Storage, and Disposal Requirements," WHC-EP-0063, Westinghouse Hanford Company, Richland, WA, September 1988.

14. "Core Sampling," Plant Operating Procedure TO-020-450, Rev/Mod E-1, Westinghouse Hanford Company, Richland, WA, January 10, 1989.

15. "Action Plan for Implementation of the Hanford Consent Order and Compliance Agreement Between the U.S. Environmental Protection Agency, The U.S. Department of Energy, and the State of Washington Department of Ecology," May 1989.

16. "Dangerous Waste Regulations," Chapter 173-303 WAC, Washington State Department of Ecology, Amended June 1987.

17. "Environmental Compliance Manual," WHC-CM-7-5, Westinghouse Hanford Company, Richland, WA, August 1988.

18. "Nonreactor Facility Safety Analysis Manual," WHC-CM-4-46, Westinghouse Hanford Company, Richland, WA, September 1988.

19. "Safety Analysis and Review System," DOE Order 5481.1B, United States Department of Energy, Washington, DC.

9 1 1 1 3 7 4 0 6 3 3

8.0 APPENDICES

THIS PAGE INTENTIONALLY
LEFT BLANK

9 1 1 1 3 9 4 0 6 2 4

THIS PAGE INTENTIONALLY
LEFT BLANK

APPENDIX A - DRAWINGS

THIS PAGE INTENTIONALLY
LEFT BLANK

9 1 1 1 8 9 4 0 6 3 5

THIS PAGE INTENTIONALLY
LEFT BLANK

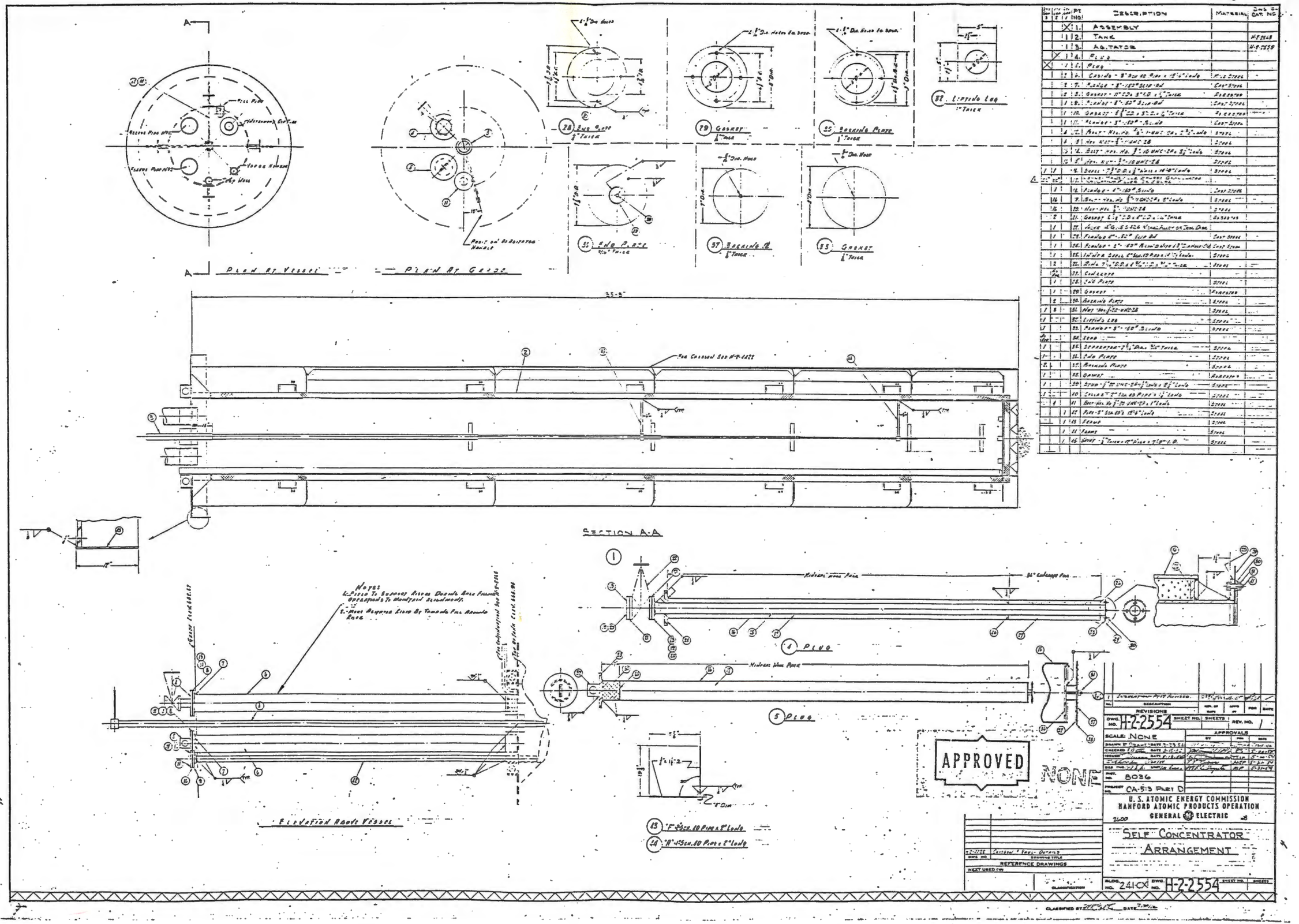
PLAN AT VESSEL
PLAN AT GRADE
SECTION A-A
ELEVATION ABOVE VESSEL
APPROVED
NONE
SELF CONCENTRATOR ARRANGEMENT
U.S. ATOMIC ENERGY COMMISSION
HANFORD ATOMIC PRODUCTS OPERATION
GENERAL ELECTRIC
SCALE: NONE
DWG. NO. H-2-2554
CA-5:3 PART D
REFERENCE DRAWINGS

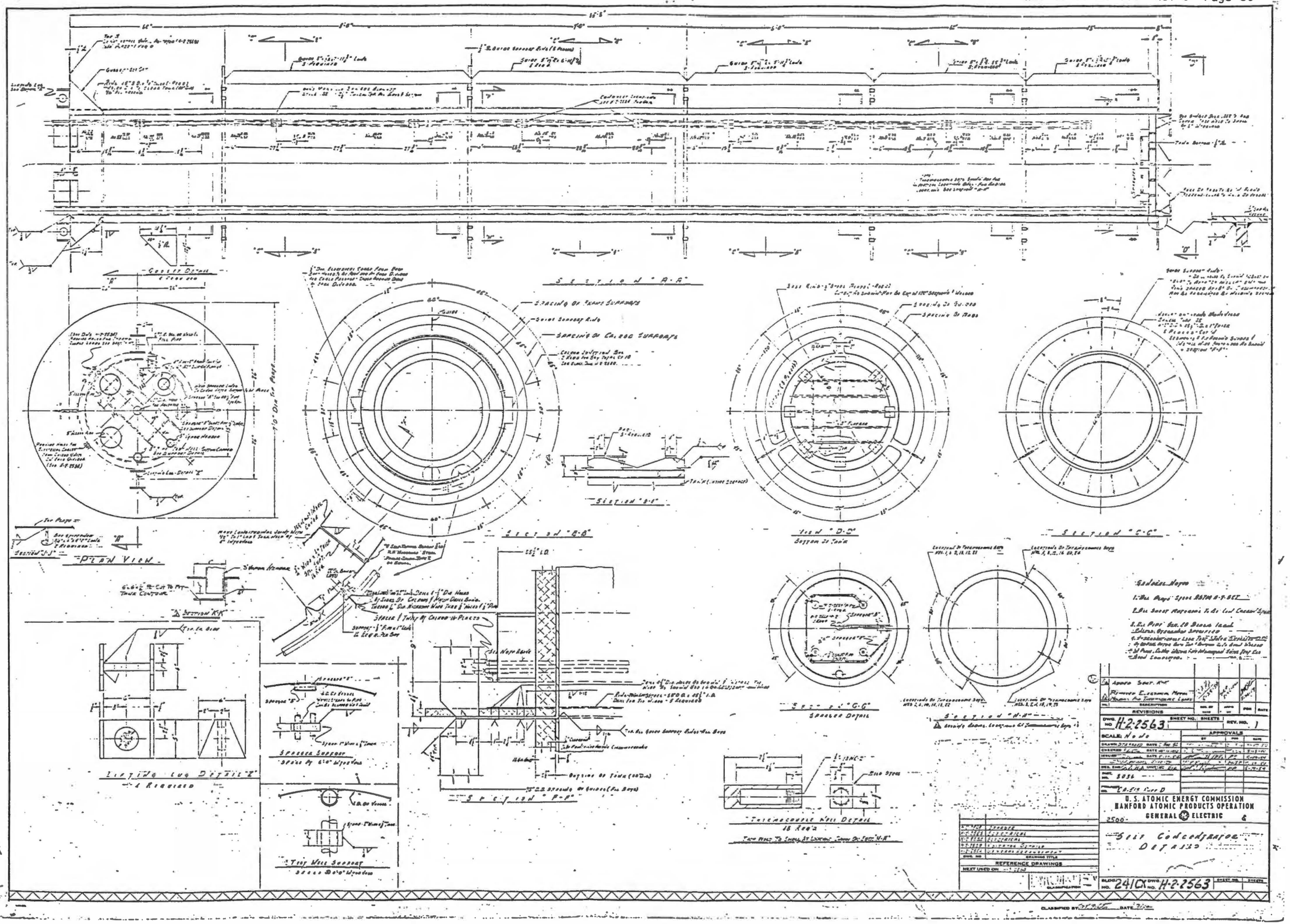
PLAN VIEW
SECTION "A-A"
SECTION "B-B"
SECTION "C-C"
SECTION "D-D"
SECTION "E-E"
SECTION "F-F"
SECTION "G-G"
SECTION "H-H"
LIFTING LUG DETAIL "Z"
SPACER SUPPORT
TOP WELL SUPPORT
SPACER DETAIL
THERMOCOUPLE WELL DETAIL
U. S. ATOMIC ENERGY COMMISSION
HANFORD ATOMIC PRODUCTS OPERATION
GENERAL ELECTRIC
SELF CONCENTRATOR DETAILS
H-2-2563
241CX

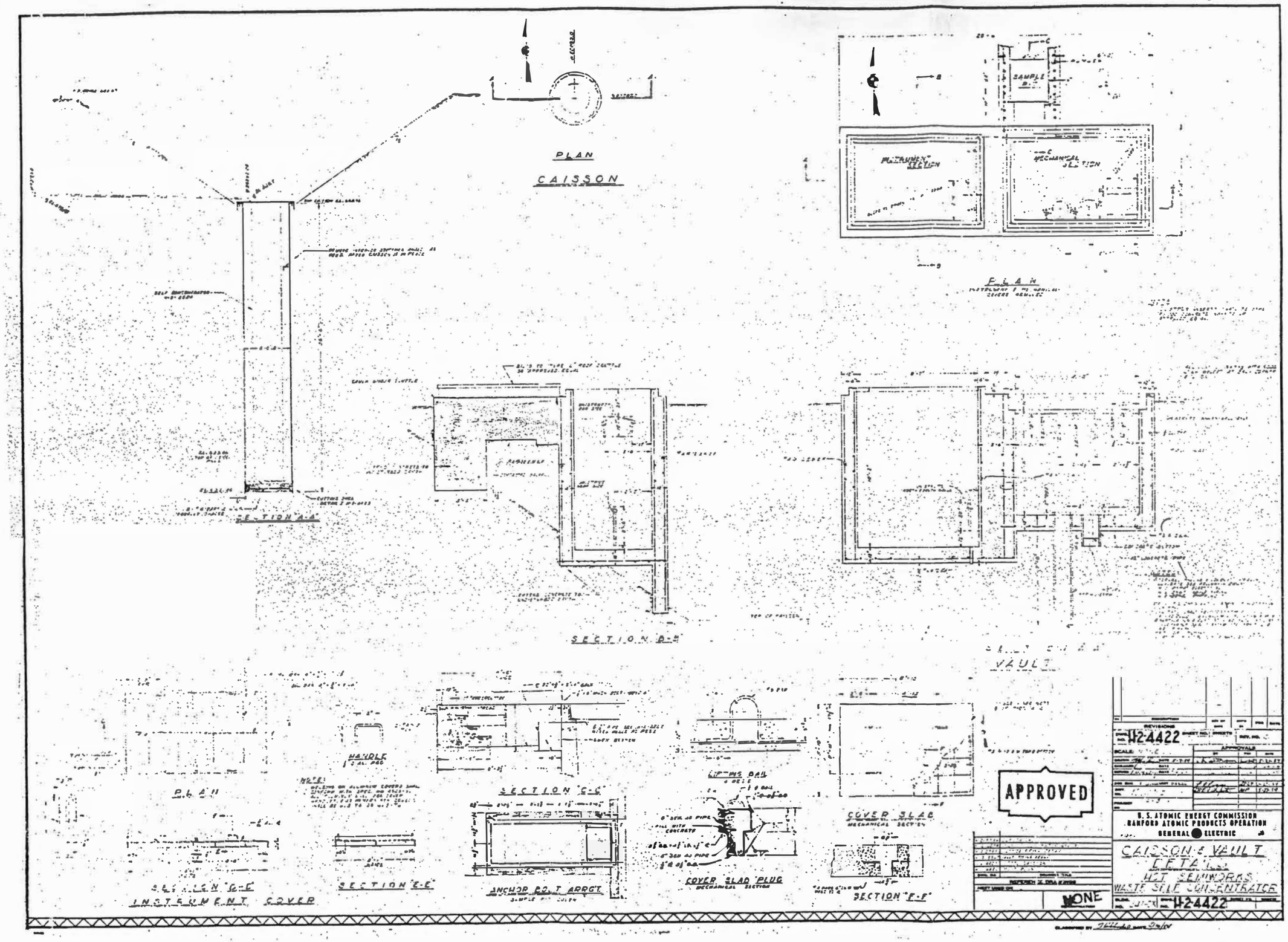

9 1 1 1 8 9 4 0 6 7 8

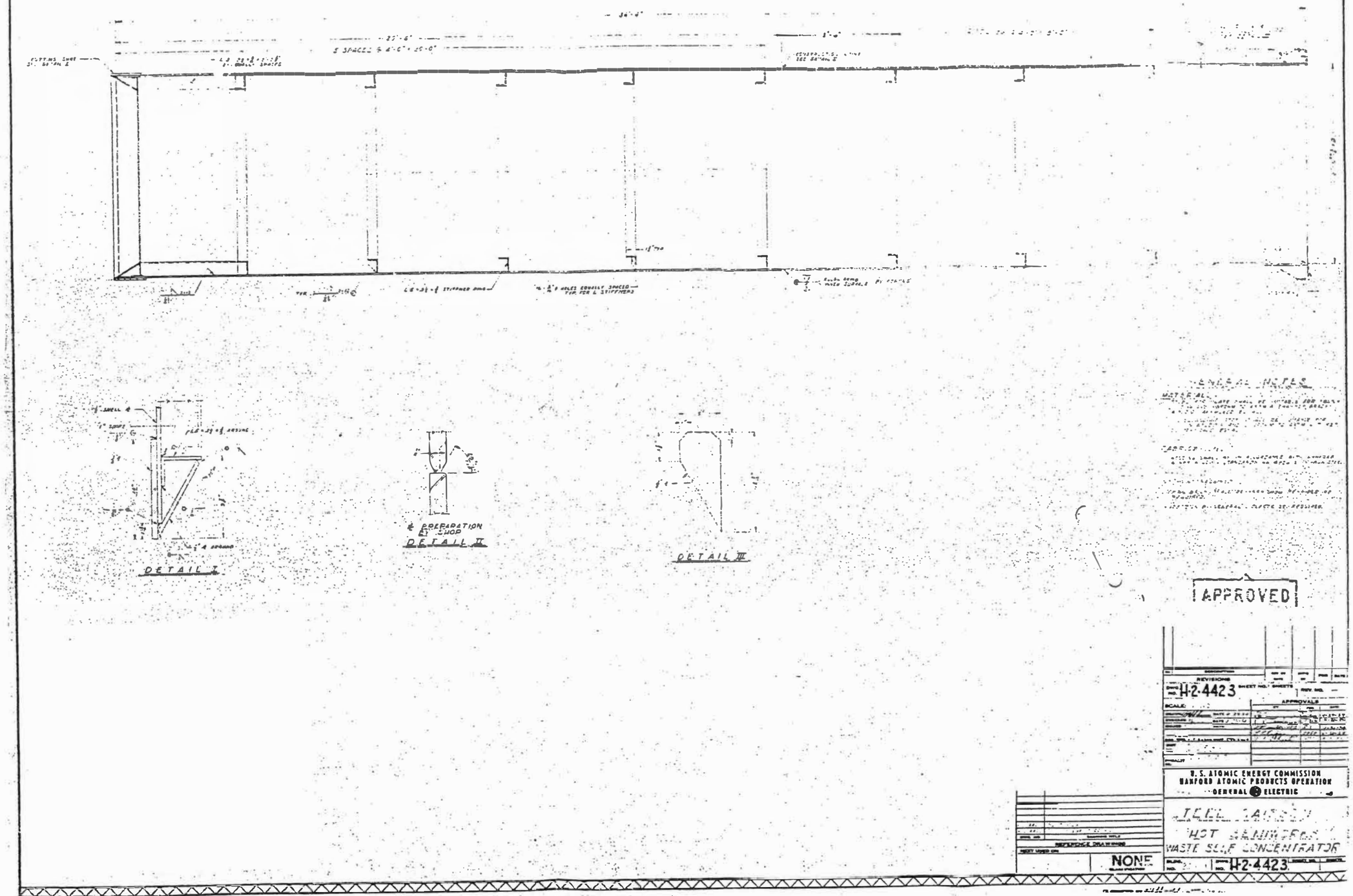
DETAIL I
DETAIL II
DETAIL III
GENERAL NOTES
APPROVED
H-2-4423
U. S. ATOMIC ENERGY COMMISSION
HANFORD ATOMIC PRODUCTS OPERATION
GENERAL ELECTRIC
HOT SAMPLERS
WASTE SLUR CONCENTRATOR
NONE
H-2-4423

9111310619

	QTY	DESCRIPTION	MATL/REF
	1	ASSEMBLY	
	2	ASSEMBLY	
	1	3 . GATE CORE CATCHER ASSEMBLY	H-2-9503
7		4 . BASKET CORE CATCHER ASSEMBLY	H-2-9503-1
1	1	5 . SAMPLE TUBE HALF, 3/4 OD X .125 W	ASTM-A269 GR TYPE 304SST
1	1	6 . SAMPLE TUBE HALF, 3/4 OD X .125 W	ASTM-A269 GR TYPE 304SST
1	1	7 . SAMPLE SHOE, 1 1/2 OD PIPE SCH 160	ASTM-A269 GR TYPE 304SST
1	1	8 . COUPLER, TUBING 1 1/2 OD X .125 W	ASTM-A269 GR TYPE 304SST
1	1	9 . HEAD BASE, P/N. 12-613	BOYLE BROS DRILLING CO
	1	10 . BEARING ASSY, P/N. 25-058-036-5	SMITH BEARING DAWSON CREEK
4	4	11 . 8331.3, P/N. 12-613	BOYLE BROS DRILLING CO
4	4	12 . QUAD LATCH SECTION, P/N. 12-611	BOYLE BROS DRILLING CO
		13 . NUT HEX JAM 3/4-16-UNF-2B	A.S.T. B18.2.2 CS
4	3	14 . SCREW, SKT HD CAP, 1/4-20 UNC-2A x 1/2 LG	AISI B18.3 CS
4	3	15 . SCREW, SKT HD CAP, 1/4-20 UNC-2A x 1/4 LG	AISI B18.3 CS
1	1	16 . ASSEMBLY	
	1	17 . BASKET CORE CATCHER ASSEMBLY	H-2-9503-2

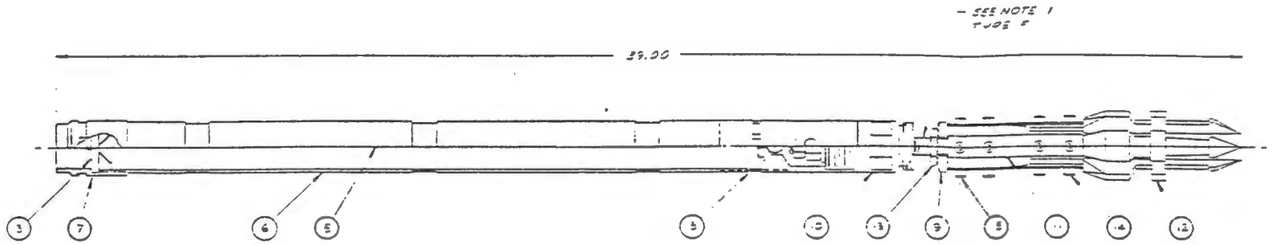

1 ASSEMELY

GENERAL NOTES:

1. IDENTIFY ASSEMBLY AND PARTS PER HWS 10227 WITH DRAWING NUMBER, PART NUMBER AND REVISION NUMBER USING 1/8 HIGH CHAR MIN IN LOCATIONS INDICATED
2. MACHINED SURFACES SHALL HAVE 125 FINISH
3. ALL MACHINED CORNERS TO BE .015 RADIUS MAX, UNLESS OTHERWISE SPECIFIED
4. BOTH HALVES OF THE 1.75 DIAMETER TUBING MAY BE USED TO MAKE UP A COMPLETE SPLIT SAMPLE TUBE ASSEMBLY. THE 1.75 DIAMETER TUBING TO BE SPLIT ON CENTER LINE AND THE KERF MATERIAL DOES NOT EXCEED .015 INCHES IN TOTAL WIDTH
5. SPLIT SAMPLE TUBE HALVES, PIE AND 6 SHALL BE CLAMPED TOGETHER FOR THREADING AND FINAL POLISHING OF FULL LENGTH INSIDE DIAMETER. SPLIT SAMPLE TUBE HALVES SHALL BE PERMANENTLY MARKED AS MATCHED SET
6. HARD CHROME PLATE SURFACES SHOWN ON PIE 5,6 AND 7. DIMENSIONS SHOWN ARE AFTER CHROME PLATING
7. REMOVE ALL BURRS

WELDING AND INSPECTION REQUIREMENTS

FABRICATION	1. WELDING STANDARD	☐ NONE ☐ AWS ■ AWS D1.1/D1.5	
		■ HWS 10233 OPTIONAL (INCLUDE LIST)	
	2. PROCEDURE SPEC & PERFORMANCE CERT	■ AWS SECT IX ■ AWS D1.1/D1.5 ☐	
	3. FILLER MATERIAL	☐ AWS SPEC NUMBER NO	
INSPECTION	4. VISUAL INSP	■ WELDING STD IN (1) ■ SPEC SHOP FINISH	
		☐ INTUP ☐ FOOT TAKE ■ FINAL	
	5. PENETRANT INSP	☐ WELDING STD IN (1) ☐	
	6. MAGNETIC PARTICLE INSP	☐ WELDING STD IN (1) ☐	
	7. ULTRASONIC INSP	☐ WELDING STD IN (1) ☐	
	8. RADIOGRAPHY INSP	☐ WELDING STD IN (1) ☐	
	9. LEAK TEST (LT)	☐	
☐ OTHER REQTS			

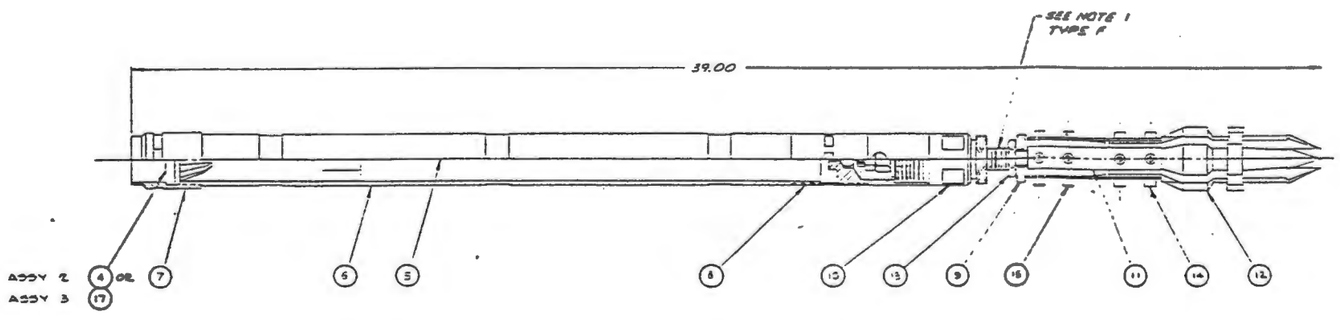

2 ASSEMBLY
16 ASSEMBLY

UNLESS OTHERWISE SPECIFIED DIMENSIONS ARE IN INCHES
TOLERANCES ON:

DECIMALS	ANGLES	FRACTIONS
.XX = ±.02	±0°30'	—
.XXX = ±.005		

DO NOT SCALE PRINT

QUALITY ASSURANCE LEVEL III

DRAWING APPROVALS	DATE
[illegible]	2/1/90
[illegible]	4/1/90
[illegible]	4/1/90
[illegible]	4/1/90
[illegible]	10/1/90
[illegible]	1/2/90
[illegible]	1/2/90
[illegible]	9/26/90
R. CHANDRINOS	9/26/90

U. S. Department of Energy
Richland Operations Office
Rockwell Hanford Operations
Richland, Washington 99352

CORE SAMPLER ASSEMBLY AND DETAILS

SCALE: NONE | SIZE: REQD | DRAWING NO: H-2-91487 | SHEET 1 OF 3 | SYSTEM NO: 200 GEN | 4150

REVISIONS

REV	DESCRIPTION
0	

REFERENCE DRAWINGS | COMMENT PRINT ISSUE NO | DATE | CHECK PRINT ISSUE NO 3 | 6-6-90

NEXT USED ON | DRAWING STATUS

9116

QTY					ITEM	DESCRIPTION	MATL/REF
				X	1	ASSEMBLY	
			X		2	ASSEMBLY	
		X			3	GATE CORE CATCHER SUB-ASSY	
	X				4	GATE VALVE RING SUB-ASSY	
X					5	GATE SUB-ASSY	
		1			6	SAMPLE TUBE HALF, TUBING [illegible] O.D. X .120 W	[illegible]
		1			7	SAMPLE TUBE HALF, TUBING [illegible] O.D. X .120 W	[illegible]
					8	SAMPLE SHOE 1½ PIPE SCHED 160	[illegible]
					9	SAMPLE SHOE, 1½ PIPE SCHED 160	[illegible] TYPE 304 SST
					10	COUPLER, TUBING [illegible] O.D. X .120 W	[illegible]
					11	COUPLER, TUBING [illegible] O.D. X .128 W	[illegible] TYPE 304 SST
					12	RETAINING BAR, .1834 (.069)	[illegible] TYPE 304 SST
					13	RETAINING BAR, .1834 (.048)	[illegible] TYPE 304 SST
	1				14	RING, TUBING [illegible] O.D. X .125 W	[illegible] TYPE 304 SST
	1				15	CUTTER, [illegible]	[illegible] TYPE 304 SST
		1	1		16	BEARING ASSY P.N. 28-085-036-5	[illegible]
					17	[illegible]	[illegible]
					18	[illegible]	[illegible]
					19	[illegible]	[illegible]
		1	1		20	NUT, HEX JAM 3/8-16 UNF-2B	ANSI B18.2.2 CS
					21	[illegible]	[illegible]
					22	[illegible]	[illegible]
2					23	GATE, 22 GAGE (.029)	ASTM A 240 GR TYPE 304 SST
1					24	HINGE, NEOPRENE .030 THK NO. 9380-0? 40 DUROMETER	ATLANTIC INDIA
AR					25	ADHESIVE, SCOTCH GRIP AN. 847	3M COMPANY
		1	1		26	QUAD LATCH ASSEMBLY	H-2-91663-1

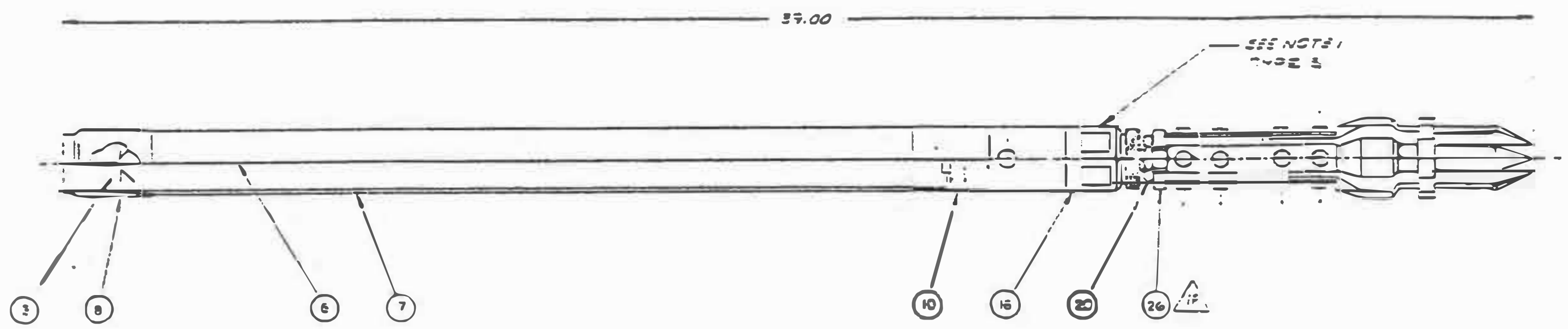

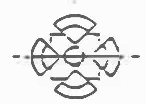

(1) ASSEMBLY

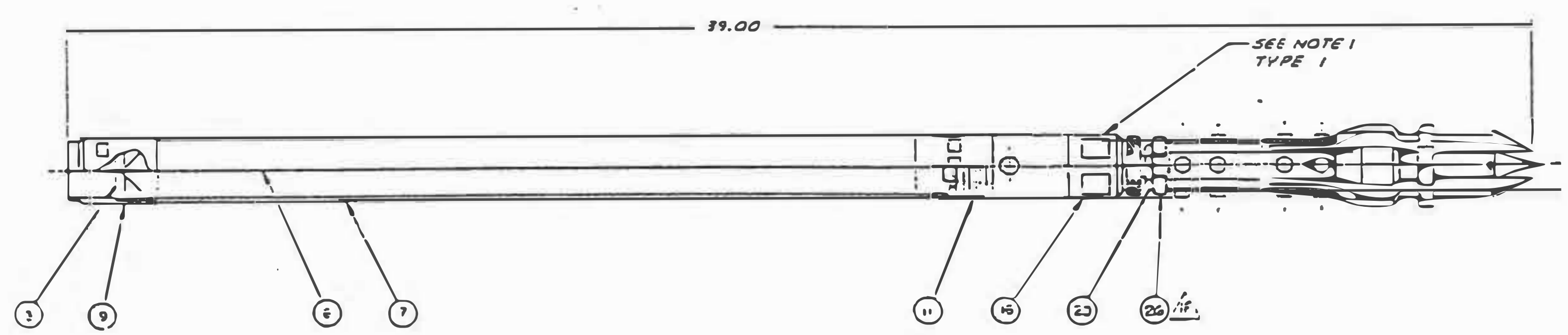

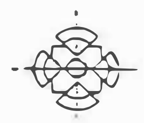

(2) ASSEMBLY

GENERAL NOTES:

1. IDENTIFY ASSEMBLIES WITH DRAWING NO, PART NO AND REV NO PER HS-25-0015 - 1/4 HIGH
2. ALL MACHINED RADII TO BE .015 MAX
3. MACHINE SURFACES SHALL HAVE 125 √ FINISH.
4. REMOVE BURRS AND BREAK ALL SHARP EDGES.
5. BOTH HALVES OF THE 1.75 DIAMETER TUBING SHALL BE USED TO MAKE UP A COMPLETE SPLIT SAMPLE TUBE ASSEMBLY. THE 1.75 DIAMETER TUBING TO BE SPLIT ON CENTER LINE, AND THE KERF MATERIAL SHALL NOT EXCEED .015 INCHES IN TOTAL WIDTH.
6. SPLIT SAMPLE TUBE HALVES, PN 6 & 7 SHALL BE CLAMPED TOGETHER FOR THREADING AND FINAL POLISHING OF FULL LENGTH INSIDE DIAMETER. SPLIT SAMPLE TUBE HALVES SHALL BE PERMANENTLY MARKED AS MATCHED SET, PER NOTE 1
7. HARD CHROME PLATE SURFACES SHOWN ON PN 6, 7 & 8. DIMENSIONS SHOWN ARE AFTER CHROME PLATING.

WELDING AND INSPECTION REQUIREMENTS

FABRICATION	1. WELDING STANDARD	HS-85-0013 OPTIONAL (INHOUSE)
	2. [illegible]	SECT IX [illegible]
	3. FILLER MATERIAL	[illegible]
INSPECTION	4. VISUAL	QAP 230.0 (INHOUSE) [illegible]
	5. [illegible]	[illegible]
	6. [illegible]	[illegible]
	7. [illegible]	[illegible]
	8. [illegible]	[illegible]
	9. LEAK TEST	[illegible]

VT ACC CRITERIA PER HS-85-0005 (IN HOUSE)

AS BUILT RECORD DRAWING-NOT FOR FABRICATION

UNLESS OTHERWISE SPECIFIED DIMENSIONS ARE IN INCHES
TOLERANCES ON:
DECIMALS .XX=.02 .XXX=.005 ANGLES ± 0°30' FRACTIONS —
DO NOT SCALE PRINT

REV	DESCRIPTION	DATE
2	STAMPAT WAS HWS-10553 NOTE 1, WAS HWS-12227, [illegible]	6-29-84
1	F. ADDED PT 26 [illegible] E. DELETE PT 22 D. DELETE PT 21 C. DELETE PT 17 B. DELETE PT 19 A. DELETE PT 18 DIRECT DRAWING CHANGE - D1 MO-050	[illegible]

QUALITY ASSURANCE LEVEL III

U. S. Department of Energy
Rockwell Hanford Operations
Richland, Washington

CORE SAMPLER ASSEMBLY AND DETAILS

A.L. MILLER
R.CHRISTENSEN

SIZE H | DRAWING NO. H-2-91498 | SHEET 1 | SCALE NONE | WEIGHT NOT REQD | ECO GEN | 4750

REFERENCE DRAWINGS | NEXT USED ON | DRAWING STATUS

CTY	IN	OUT	DESCRIPTION	MATL/REF
			(26) ASSEMBLY (SEE NOTE 11)	—
		1	(25) SEAL V-RING V-32A	[illegible]
X		1	(29) ASSEMBLY	—
1		1	(30) ASSEMBLY CORE SAMPLER S-28	H-2-81622

CTY	IN	OUT	DESCRIPTION	MATL/REF
	X	1	ASSEMBLY	—
1	X	2	BODY ASSEMBLY (SEE NOTE 11)	—
2	X	2	WIRE ASSEMBLY	—
1	X	4	PISTON ASSEMBLY	—
1		5	BAR	ASTM-A276 410 SST
1		6	PISTON, BAR	ASTM-A276 304 SST
1		7	VALVE, BAR (SEE NOTE 11)	ASTM-A276 410 SST
1		8		
1		9	BAR 1.575 DIA (SEE NOTE 11)	ASTM-A276 304 SST
1		10	QUADRA LATCH ADAPTER, BAR	ASTM-A276 304 SST
2		11	CYLINDER .125 O.D, BAR	ASTM-A276 304 SST
1		12	CONE, BAR	ASTM A 36 CS
AR		13	LUBRICANT SEALER SEE NOTE 5	DOW CORNING 111
1		14	WIRE, AWG 20 (.0320 DIA) SEE NOTE 17	ANNEALED COPPER QQ-W-343 TYPE S
1		15	O-RING	PARKER 2-210/270, 70
2		16	SCREW, SOCH, SET 4-48UNF-2B x 3/8 (MOD)	COML CS
1		17	CABLE .037 O.D (SEE NOTE 12)	SMALL PARTS INC PN MC3-37 SST
1		18	BAR (1.00 DIA)	ASTM-A276 304 SST
1		19	QUADRA LATCH	H-2-91684-1
AR		20	THREAD BONDER	LOCTITE TYPE 271
1		21	SETSCREW HEX SKT (MOD) 1/4-20UNC-2A	COML SST
1		22	ROD, 3/16 OD	ASTM-A276 304L SST
1		23	SPRING, SHIMSTOCK .015 FULL HARD	300 SERIES
1		24	BALL .0.1875	COML SST
2		25	PLUNGER, BALL #6-40UNF-2A x 5/16 L W/.078 Ø BALL SEE NOTE 12	CARR LANE #CLHS-SBA-1 OR EQUAL
1		26	SCREW, BUTTON HD #10-32UNF-2A x .133 L	COML SST
1		27	BAR 1/2 INCH DIA	ASTM-A276 304L SST

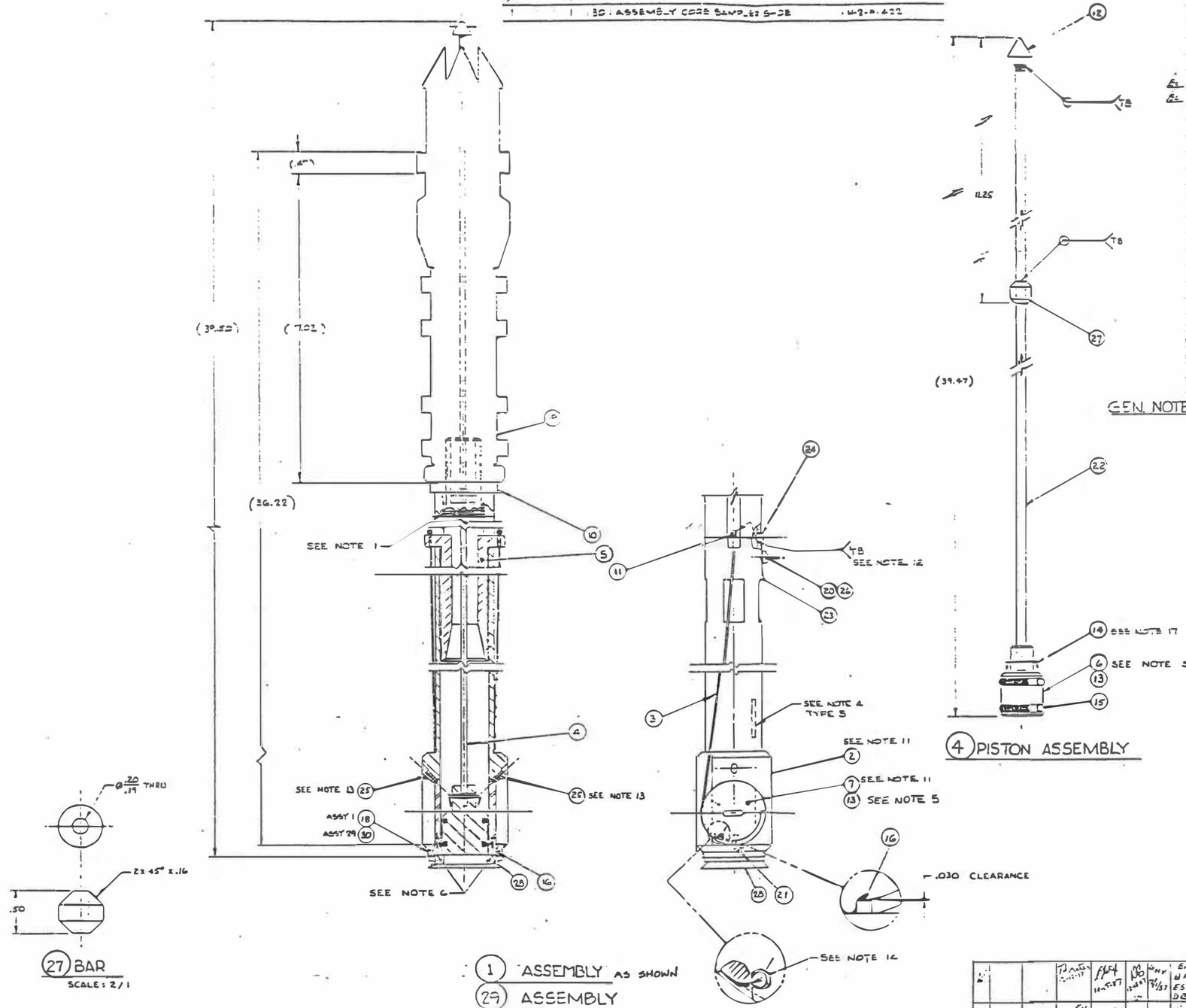

(1) ASSEMBLY AS SHOWN
(29) ASSEMBLY

(4) PISTON ASSEMBLY

(27) BAR
SCALE: 2/1

GEN. NOTES:

1. USE PN 20 ON THREADED PARTS WHERE NOTED.
2. BREAK ALL SHARP EDGES AND CORNERS.
3. ALL RADII TO BE .020 MAX UNLESS OTHERWISE NOTED.
4. IDENTIFY ASSEMBLY PER HS-35-0015 TYPE 5 WITH DRAWING NUMBER, PART NUMBER AND DRAWING REVISION NUMBER. LOCATION INDICATED USING .25 HIGH CHARACTERS. IDENTIFY PARTS WITH DWG NUMBER, PART NUMBER AND DWG REVISION NUMBER PER HS-35-0015, TYPE F.
5. USE PN 13 ON PN 6, 7 & 9 DURING ASSEMBLY. (NO SUBSTITUTES)
6.
7. UNLESS OTHERWISE SPECIFIED MACHINED SURFACES TO BE 63
8. FOR PULL ROD OVERPACK ASSEMBLY SEE H-2-91687
9.
10. BRAZING AND INSPECT PER SVI SUBSECTION NC, ASME SECT III. USING PART C SFA 5.8 BAg-1. VT FINAL PASS
11. ASSEMBLY 2 & PN 7 SHALL BE MATCH FITTED & SERIALIZED. THE SERIAL NUMBER SHALL CONSIST OF ONLY A SEQUENCE NUMBER & MUST BE FABRICATED OR PROCURED AS AN ASSEMBLY.
12. WHEN INSTALLING THE WIRE ASSEMBLY (PN 3) ON THE MAIN ASSEMBLY (PN 1), TIGHTEN THE CABLE JUST ENOUGH TO KEEP IT IN THE GROOVES OF THE VALVE (PN 7). MAKE NO SUBSTITUTIONS ON PN 17.
13. REMOVE NYLOK INSERT FROM PN 25 BEFORE INSTALLATION.
14. USE PN 20 TO RETAIN PN 3 IN PN 7.
15.
16. ALL PART NUMBERS ARE IMPACT LEVEL III
17. NO SUBSTITUTES

UNLESS OTHERWISE SPECIFIED DIMENSIONS ARE IN INCHES. TOLERANCES ON		
DECIMALS	ANGLES	FRACTIONS
.XX ± .02	±1°-0'	———
.XXX ± .005		

DO NOT SCALE PRINT

IMPACT LEVEL III

8							EAR WAS TYPE. b) PR. RMS REFER. UPD. PN9 ESR 11327. a) NOTE 10 DELETED. DIRECT DWG CHANGE PER
7							a) ADD NOTE PN 7 c) REMOVED NOTE 2N 26 b) ADDED NOTE PT 27, 3, 9 ESR 11327 a) SEE NOTE 11 DIRECT DWG. CHANGE PER

H-2-91650	DWG INDEX
DWG NO.	DRAWING TITLE
TRACEABILITY DRAWINGS	

H-2-91330	PULL ROD RETRIEVER
H-2-91687	PULL ROD OVERPACK ASSY
REFERENCE DRAWINGS	

DRAWING APPROVALS	DATE
[illegible]	[illegible]
[illegible]	[illegible]
[illegible]	[illegible]
[illegible]	[illegible]
[illegible]	[illegible]
D. L.	6-81

U. S. Department of Energy
Richland Operations Office
Richland, Washington 99352

1" ROTARY VALVE SLUDGE SAMPLER ASSEMBLY AND DETAILS

NONE | H-2-91685 | 1 | 2

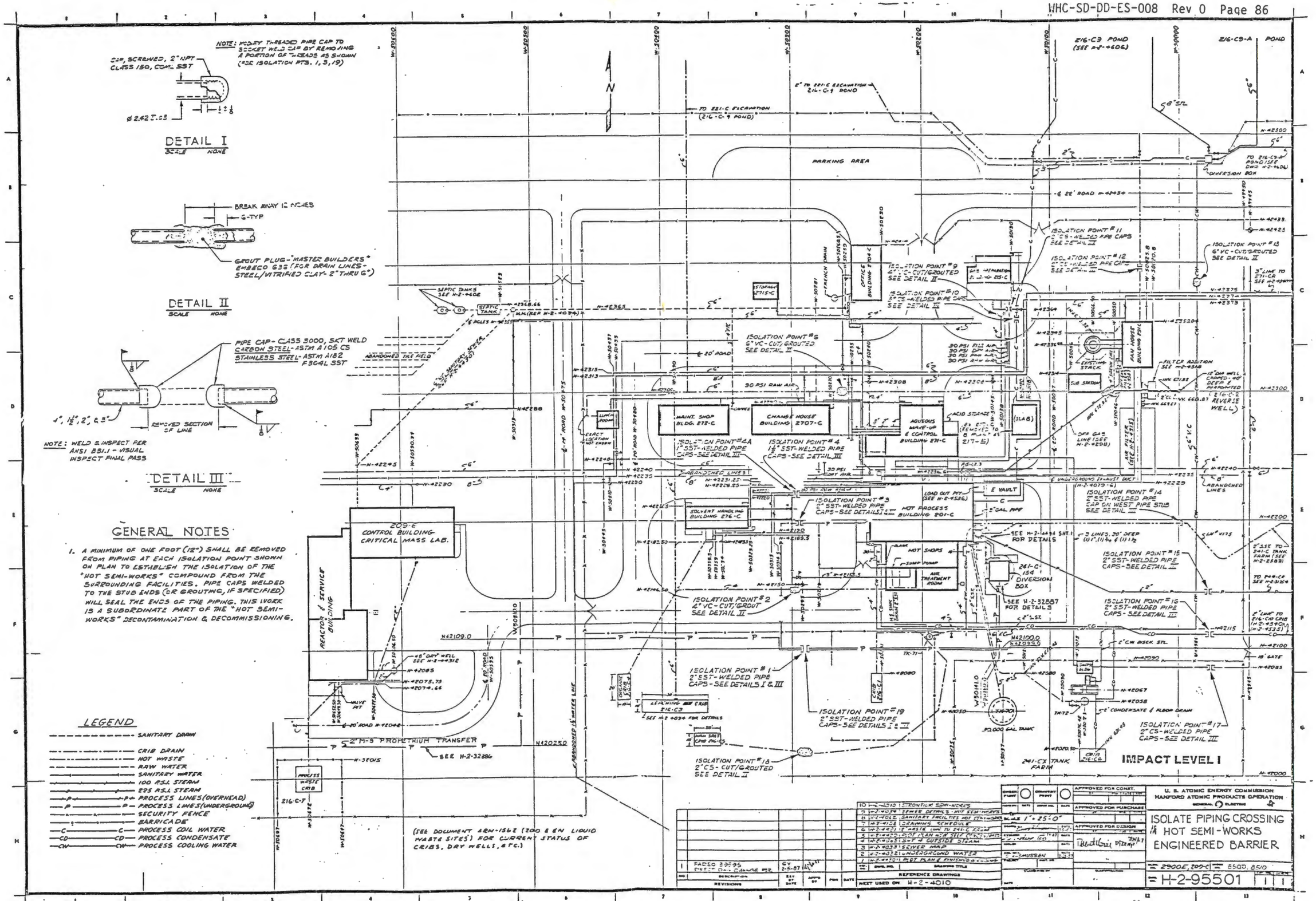
DETAIL I
SCALE NONE
DETAIL II
SCALE NONE
DETAIL III
SCALE NONE
GENERAL NOTES
1. A MINIMUM OF ONE FOOT (12") SHALL BE REMOVED FROM PIPING AT EACH ISOLATION POINT SHOWN ON PLAN TO ESTABLISH THE ISOLATION OF THE "HOT SEMI-WORKS" COMPOUND FROM THE SURROUNDING FACILITIES. PIPE CAPS WELDED TO THE STUB ENDS (OR GROUTING, IF SPECIFIED) WILL SEAL THE ENDS OF THE PIPING. THIS WORK IS A SUBORDINATE PART OF THE "HOT SEMI-WORKS" DECONTAMINATION & DECOMMISSIONING.
LEGEND
SANITARY DRAIN
CRIB DRAIN
HOT WASTE
RAW WATER
SANITARY WATER
100 PSI. STEAM
225 PSI. STEAM
PROCESS LINES (OVERHEAD)
PROCESS LINES (UNDERGROUND)
SECURITY FENCE
BARRICADE
PROCESS COIL WATER
PROCESS CONDENSATE
PROCESS COOLING WATER
(SEE DOCUMENT ARH-1562 (200 & EN LIQUID WASTE SITES) FOR CURRENT STATUS OF CRIBS, DRY WELLS, ETC.)
PARKING AREA
209-E CONTROL BUILDING CRITICAL MASS LAB.
REACTOR & SERVICE BUILDING
MAINT. SHOP BLDG. 272-C
CHANGE HOUSE BUILDING 2707-C
AQUEOUS WASTE-UP & CONTROL BUILDING 231-C
SOLVENT HANDLING BUILDING 276-C
HOT PROCESS BUILDING 201-C
HOT SHOPS
AIR TREATMENT ROOM
241-C-154 DIVERSION BOX
241-C TANK FARM
216-C-7 PROCESS WASTE CRIB
216-C-9 POND
216-C9-A POND
DIVERSION BOX
FAN HOUSE BUILDING
IMPACT LEVEL I
U. S. ATOMIC ENERGY COMMISSION
HANFORD ATOMIC PRODUCTS OPERATION
ISOLATE PIPING CROSSING HOT SEMI-WORKS ENGINEERED BARRIER
SCALE 1" = 25'-0"
= H-2-95501

QTY	QTY	PART	DESCRIPTION	MATERIAL SPECIFIED	REF
—	X	1	ASSEMBLY		3
—	1	2	HOUSING, TUBE	ASTM-A269 TYPE 304 SST	3
—	1	3	VALVE HOUSING	ASTM-A276 TYPE 304 SST	3
—	1	4	VALVE (HEAT TREAT TO 250-300 BRINELL)	ASTM-A276 TYPE 410 SST	3
—	1	5	GUIDE	ASTM-A276 TYPE 304 SST	4
—	1	6	PISTON	ASTM-A276 TYPE 304 SST	3
—	1	7	CONE	ASTM-A36 CS	4
—	1	8	PISTON ROD	ASTM-A276 TYPE 304 SST	4
—	2	9	PIN (3/32 DIA.)	ASTM-A276 TYPE 304 SST	4
—	1	10	GUIDE, PIPE 3 1/2 SCH 80	ASTM-A120 CS	4
—	1	11	VALVE STOP	ASTM-A276 TYPE 304 SST	4
8	—	12	DRIVE SCREW #8 (0.164) x 7/8 L	PHILLIPS PAN HD CATALOG #9,63444192	4
—	1	13	WIRE, AWG 18 (.0403 DIA) x 30' LG	TYPE 1 AWG 18 SOLID COPPER	4
—	1	14	INSERT (HEAT TREAT TO 250-300 BRINELL)	ASTM-A276 TYPE 410 SST	4
—	1	15	O-RING .629 ID x .887 OD	PARKER P-208-N674-70	3
—	2	16	SWAGED PLUG (SEE NOTE 7)	CABLE MFG. CASSEN CO. #SC-0362	4
—	2	17	CABLE ASSEMBLY .062 DIA CABLE x 30' LG WITH .125 DIA BALL FITTING	CABLE MFG CASSEN CO. CAB-B W/ EDGETYPE BALL FITTING	4
—	2	18	SEAL ASTM-D-1418	VITON SASEMAL, EDGE MOLDED & CUT OFF	3
—	1	19	SEAL V-RING A	PORTSMOUTH SHAFT SEAL CORP. NO. V-32A	4
—	AR	20	ADHESIVE	LOCKTITE 270 SERIES	4
—	1	21	SET SCREW 10-24 UNC x 1/4 - HEX SOC. CUP PT	COML SST	4
X	1	22	QUADRA LATCH ASSEMBLY		4
4	—	23	LATCH (MODIFIED) REF H-2-91684	BOYLE BROS DRAWING PN 022-356-023	4
4	—	24	SPRING (MODIFIED) REF H-2-91684	BOYLE BROS DRAWING PN 022-370-059	4
1	—	25	HEAD BASE	ASTM-A276 TYPE 304 SST	4
8	—	26	SCREW 1/4-28 UNF x 3/8 L HEX HD	ASTM-A193 GRB8 304	4
8	—	27	WASHER LOCK 1/4 HELICAL SPRING	COML SST	4

GENERAL NOTES:

1. UNLESS OTHERWISE SPECIFIED MACHINED SURFACES TO BE 125
2. WHEN INSTALLING THE CABLE ASSEMBLY (PN 17) ON THE MAIN ASSEMBLY (PN 1) TIGHTEN THE CABLE JUST ENOUGH TO KEEP IT IN THE GROOVES OF THE VALVE (PN 4) CRIMP (PN 16) IN PLACE WITH CRIMPING TOOL. TRIM OFF EXCESS CABLE.
3. IDENTIFY ASSEMBLY 1 PER WS-BS-0015 TYPE 3 WITH DRAWING NUMBER PART NUMBER AND DRAWING REVISION NUMBER IN LOCATION INDICATED USING .09 HIGH CHARACTERS.
4. USE (PN 20) TO RETAIN (PN17) IN (PN4), (PN19) ON (PN14)
5. A CHEMICAL MATERIAL CERTIFICATION PER ASTM IS REQUIRED FOR ALL MATERIALS WHICH COME IN CONTACT WITH THE SAMPLE PART NO.S 2, 3, 4, 6, 15, AND 18
6. ALL PARTS TO BE AS SPECIFIED OR COGNIZANT ENGINEER APPROVED EQUAL
7. ALLOWABLE SUBSTITUTION FOR FOR (PN16), 15GA. SST TUBING. ANY AISI 300 SERIES MATERIAL WITH .054 I.D. AND .009 WALL x 1/2" LONG.
8. REMOVE ALL BURRS AND BREAK SHARP EDGES.
9. DIMENSIONING AND TOLERANCES PER ANSI Y14.5M 1982. DIMENSIONS ARE IN INCHES. TOLERANCES ON DECIMALS ARE .X = .1; .XX = .01; .XXX = .005.
10. WELD, BRAZE AND INSPECT PER ASME SECTION VIII DIV. 1. VT ALL WELD AND BRAZED JOINTS AT FINAL PASS
11. SCREW (PN-14) INTO (PN-3) UNTILL A CLOSING TORQUE OF 12 TO 15 IN. LBS IS ACHIEVED FOR ROTATING VALVE. (PN-4)

OFFICIAL RELEASE BY WHC DATE JUN 05 1989

DRAWING TRACEABILITY LIST

DWG NO	TITLE
H-2-91685	ROT VALVE SLUDGE SAMPLER
H-2-91684	MOD QUADRA LATCH

REFERENCES

REF NUMBER	TITLE
NEXT USED ON	H-2-91650

REVISIONS

REV NO	DESCRIPTION	REV BY DATE	CHK BY DATE	APPD DATE	CONC DATE	OTHER 1	OTHER 2

DRAWN E.F. Schmidt 6-2-89
CHECKED
DFTG APPD E. M. Knight 6/2/89
CONC ENG C. H. Schotten 6/2/89
APPD MATERIAL ENGR 6/2/89
PCR
OTHER
OTHER
APPD FOR IMPLEMENTATION
BY
DATE

M

U.S. DEPARTMENT OF ENERGY
Richland Operations Office
Westinghouse Hanford Company

SLUDGE SAMPLER
7/8 DIA VALVE

SIZE	SCALE	DWG NO	REV
F	200 DEN	4750	H-2-99316	0

MATERIAL
SHEET 1 OF 2

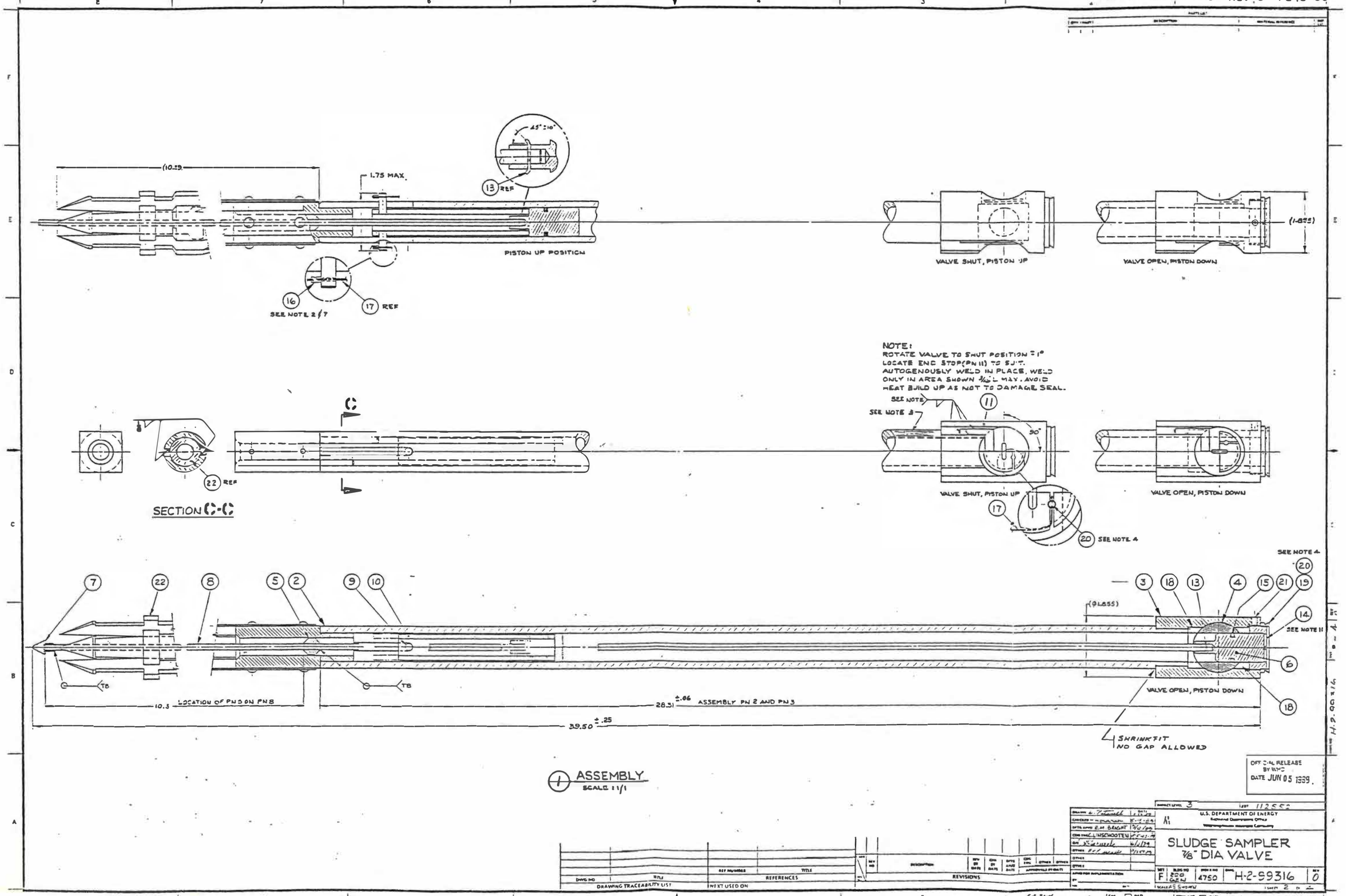
(10.29)
1.75 MAX.
13 REF
PISTON UP POSITION
16
17 REF
SEE NOTE 2 & 7
VALVE SHUT, PISTON UP
VALVE OPEN, PISTON DOWN
(1.855)
NOTE:
ROTATE VALVE TO SHUT POSITION ±1°
LOCATE END STOP(PN 11) TO SUIT.
AUTOGENOUSLY WELD IN PLACE. WELD
ONLY IN AREA SHOWN 3/16" L MAX. AVOID
HEAT BUILD UP AS NOT TO DAMAGE SEAL.
SEE NOTE 3
SEE NOTE 3
11
90°
VALVE SHUT, PISTON UP
VALVE OPEN, PISTON DOWN
17
20 SEE NOTE 4
22 REF
SECTION C-C
SEE NOTE 4
20
7
22
8
5
2
9
10
3
18
13
4
15
21
19
14
SEE NOTE 11
(9.855)
6
18
TB
TB
10.3 LOCATION OF PN 5 ON PN 8
28.31 ±.06 ASSEMBLY PN 2 AND PN 3
39.50 ±.25
VALVE OPEN, PISTON DOWN
SHRINKFIT
NO GAP ALLOWED
1 ASSEMBLY
SCALE 1:1/1
OFFICIAL RELEASE
BY WHC
DATE JUN 05 1989
U.S. DEPARTMENT OF ENERGY
SLUDGE SAMPLER
7/8" DIA VALVE
F
200
GEN
4750
H-2-99316
0
SCALE AS SHOWN
SHEET 2
DRAWING TRACEABILITY LIST
REFERENCES
REVISIONS

APPENDIX B - REFERENCED INTERNAL LETTERS

THIS PAGE INTENTIONALLY
LEFT BLANK

9111139406296

THIS PAGE INTENTIONALLY
LEFT BLANK

ATTACHMENT 2

Date: July 2, 1974

To: J. A. Teal

From: D. G. Harlow

Subject: DISPOSITION AND ISOLATION OF TANKS 270-E-1, 270-W, 241-CX-70, 241-CX-71, and 241-CX-72

Reference: Letter, June 10, 1974, G. Burton, Jr. to F. R. Standerfer, "Waste Tank Survey"

A meeting was held on June 28, 1974 to formalize plans for disposition and isolation of the subject tanks. The completion of the activities involved should be scheduled prior to colder weather as many of the plans involve overground transfers and other work which is hampered by cold weather. Action on individual tanks must be taken on a regular basis as the reference lists a large number of other tanks which require plan formulation by August 1, 1974 and August 30, 1974, respectively.

Each of the subject tanks is discussed individually in this letter. Information presented includes location, size, sources, liquid levels (where applicable), composition of contents (where available), and an action plan for disposition of the vessel's contents and subsequent isolation from the system.

Tank 270-E-1

This nine-foot diameter by nine-foot high stainless steel tank, located approximately three hundred yards west of the 221-B Building, is currently not in service. The tank is visible as a large charging riser and vent riser above the ground in a roped off area. It was used for the neutralization of low-level condensate from the 221-B and 224-B concentrators. The condensate entered the tank at the bottom from the southeast, flowed upward through a limestone bed and through an outlet eight feet above the tank bottom. Both the inlet and outlet lines are currently open. From the tank, the condensate flowed northwest to crib 216-ER. Data on use of this crib indicate that the tank was in active service from June 1952 through January 1957. During this time, approximately 1.4 billion gallons

will be pumped to a tank truck and disposed of in a designated waste tank. The limestone will remain in the tank, and the inlet and outlet lines will be capped. Surveillance of the tank is not required.

Tank 241-CX-70

This 32,000 gallon capacity tank is 20 feet in diameter and 16 feet high and has not been in service since 1957. The tank is a reinforced concrete shell with a quarter inch stainless steel liner. Current liquid level measurements show 13.5 feet of liquid and sludge and has remained at this level since May 1, when liquid level measurements were resumed. Sludge level measurements indicate the tank contains about 21,300 gallons liquid and 10,700 gallons of solids. The tank was used about one and one-half years for the storage of Redox-type process wastes. Large volumes of decontamination solutions containing oxalic acid, caustic-permanganate, caustic-tartrate, and other chemicals were also routed to the tank. It was to be one of a series of CX tanks, but was the only one built. The only line entering the tank comes from the 201-C Building, 100 feet directly to the north, and enters the tank at the top. This line is cut and capped at the 201-C Building. There is no line leaving the tank. Analysis of the liquid sample shows a clear yellow liquid with a pH of 9.65. The over-the-top radiation reading is 0.05 mR per hour. Other results are:

^{137}Cs	5.79×10^{4} µCi/gal	(total ~ 1.2 kilocuries)*
Pu	9.24×10^{-5} g/gal	(total ~ 2 grams)
U	5.67 g/gal	(total ~ 120 Kg)
$^{89,90}Sr$	3.23×10^{2} µCi/gal	(total ~ 6.9 Ci)
DTA	- no exotherms	

Current plans are to pump the free liquid overground to the 254 diversion box and from there to CR Vault and waste tanks. The inlet line will be cut and capped at the tank, and the risers will be capped. A salt well will not be installed due to the small volume of interstitial liquid involved, the low activity in the solution, the high cost of salt well equipment, and the expected high integrity of the stainless steel liner. A sludge sample will be obtained to determine the heat generation rate. This information will be used to determine if installation of a thermocouple tree is required for monitoring the sludge temperature. An exhauster will also be considered based on the heat generation rate.

*Previously reported as approximately 5 kilocuries.

9111140678

Tank 241-CX-71

Tank 241-CX-71 contains a limestone bed similar to that in 270-E-1 and 270-W. Although an extensive search was made, no prints of the tank could be found. Personnel associated with the facility in the early 1950's recall the tank is a five-foot diameter by six foot deep tank located underground about 10 feet south of the road directly behind the 201-C Building. The tank was used for neutralizing the 201-C condensate and the coil and condenser cooling water from December 1952 through November 1956. Flush wastes during decontamination also went through the tank from December 1956 through June 1957. After this date, the tank was no longer used. During this time, approximately 8.8 million gallons of waste flowed through the tank. This waste contained, on the average, 0.0033 g/gal of uranium, 9.3×10^{-8} g/gal plutonium, and 1.3×10^{-4} Ci/gal of beta emitting particles. The sources of solution to the tank were the 201-C Hot Process Building (condensate) and drain from the hot shops. These lines are blanked at the tank. Outlets include one to the 216-C-1 crib, which is blanked, and one to the 216-C-5 crib, which is open. A sample of the liquid was obtained on July 1, 1974. Visual inspection indicates the tank contains very little liquid.

Plans for disposition and isolation are to excavate the tank to verify the size and to determine the liquid content. Any contained liquid will be pumped into a tank truck for disposal to a designated tank with the best available pumping system designed to achieve a minimum liquid heel. The limestone will remain in the tank, and the inlet and outlet lines will be blanked. The tank does not require further surveillance.

Tank 241-CX-72

Tank 241-CX-72 is a 36-foot deep by 3-foot diameter carbon steel tank located just east of tank 241-CX-70. The only inlet to this tank is from the 201-C Building, and it is cut and capped there. There is no exit from the tank, but there is an above ground vent riser. The tank was used as an experimental tank to determine the characteristics of self-concentrating wastes during 1956. Currently, liquid level measurements are six feet, two-and-one-half inches of

which all but approximately one inch is sludge. This level is measured daily and is holding steady. Analysis of the solution shows a clear, light brown liquid with a pH of 9.50 and a trace of solids. The over-the-top radiation reading is less than 0.001 mR per hour. Other results are:

Pu	1.13×10^{-8} g/gal
U	2.43×10^{-3} g/gal
^{137}Cs	none detected
$^{89,90}Sr$	4.33×10^{-3} μCi/gal
DTA	no exotherms

The current plan of action for this tank is to take a sludge sample to determine the heat generation rate. This information will be used to determine if installation of a thermocouple tree is required. The tank will be isolated by cutting and capping the inlet and all risers (if not required for temperature monitoring). Further liquid level surveillance is not required.

DGH:ncw

cc: JF Geiger
DG Harlow
PM Herzog
GC Oberg
RM Smithers
RL Walser
LB

June 2, 1976

DC Hanlon
WM Harty, Sr.
DE Kelley *
EJ Kosiancic
CW Malody *
GA Nicholson
MF Rice
HP Shaw
GT Stocking
JH Warren
GO Wheeler
AT White *
Central File

U. S. Energy Research and
Development Administration
Richland Operations Office
Richland, Washington 99352

Attention: Mr. O. J. Elgert, Director
Production and Waste Management
Programs Division

Subject: WASTE TANK SURVEY
Contract E(45-1)-2130

References:
(1) Letter, June 10, 1974, G. Burton, Jr. to F. R. Standerfer, same subject

(2) Letter, June 19, 1974, O. J. Elgert to G. T. Stocking, same subject, (PWM:CDC)

(3) Letter, July 5, 1974, G. Burton, Jr. to O. J. Elgert, same subject

(4) Letter, August 2, 1974, G. Burton, Jr. to O. J. Elgert, same subject

(5) Letter, January 19, 1976, O. J. Elgert to G. T. Stocking, same subject, (PWM:CDC)

(6) Letter, March 19, 1976, G. Burton, Jr. to O. J. Elgert, same subject

Gentlemen:

The reference 5 letter requested Atlantic Richfield Hanford Company to sample, analyze and propose ultimate disposition of the sludge in a number of tanks by April 1. This request applied specifically to Tanks 361-B, 361-T, 361-U, CX-70, CX-72 and any other tank in the survey with contents having a similar potential for significant environmental and cost of disposition impact. In reponse to this request, the reference 6 letter was issued to provide a summary of the proposed action plan and to state a completion date of June 1, 1976. One additional facility (205-S Redox Uranium Process Cell sump and Tank SG-2), not identified in the reference correspondence, is in the schedule with the same completion date.

Energy Research and
Development Administration
Attention: Mr. O. J. Elgert
Page 2
June 2, 1976

Prior to the time of the Hanford Atomic Metal Trades strike, the liquid contents of Tanks 361-B, 361-T, and 361-U were sampled and analytical results reported. Tank CX-70 was previously analyzed. The standard operating procedures for solution transfers were prepared, and the 205-S cell sump was refurbished to provide transfer support services.

Followng completion of the strike, solutions contained in the 361- series tanks and Tank CX-70 (Tank C-72 contains only sludge) will be incrementally pumped to a 5,000-gallon capacity tanker truck for transport to an underground storage tank. It is anticipated that at least 17 individual transfers will be required to complete the total program for liquid removal. Sludge sampling is scheduled for all tanks to characterize the stored contents.

We will provide a sludge sampling schedule three weeks following completion of the strike. The results of the samples will dictate further action plans.

Very truly yours,

ORIGINAL SIGNED BY:
C. W. MALODY

G. Burton, Jr.
Vice President - Production and
Waste Management

GB:CWM:dkd

cc: OJ Bennett, ERDA-RL
JL Rhoades, ERDA-RL

Ltr. 6881
bcc:
DC Bartholomew
FE Boyd
G Burton, Jr.
DG Harlow
WM Harty, Sr.
EJ Kosiancic*
CW Malody (2)
JE Mirabella
RD Prosser*
MF Rice
HP Shaw
TE Sparks
JA Teal
JH Warren
GO Wheeler
AT White*
Central File

*Bag

U. S. Energy Research and
Development Administration
Richland Operations Office
Richland, Washington 99352

Attention: Mr. O. J. Elgert, Director
Nuclear Fuel Cycle and Production Division

Subject: WASTE TANK SURVEY
Contract EY-76-C-06-2130

References:
(1) Letter, January 19, 1976, O. J. Elgert to G. T. Stocking, same subject, (PWM:CDC)

(2) Letter, August 23, 1976, G. Burton, Jr. to O. J. Elgert, same subject

(3) Letter, October 5, 1976, C. W. Malody to O. J. Elgert, same subject

(4) Letter, October 18, 1976, C. W. Malody to O. J. Elgert, same subject

Gentlemen:

The reference 4 letter stated that we would make a second attempt to obtain a sludge sample from Tank CX-72 by November 1, 1976. Sampling was attempted in another location in the tank but no sludge was found. Sludge measurements and visual inspection of the tank indicate that there is no sludge in the tank.

Optical equipment is being purchased which will allow us to obtain an in-tank view of Tank CX-72. This equipment will not be available until February 1, 1977. We will inform you at that time of our plans for obtaining an in-tank inspection of Tank CX-72.

U. S. Energy Research and
Development Administration
Attention: Mr. O. J. Elgert
Page 2
NOV 30 1976

Sludge samples have been obtained from Tanks 361-B, 361-T, 361-U, and CX-70 as stated in reference 4. The analysis of these sludge samples will be used to determine if additional samples are needed. If additional samples are needed, they will be obtained after the supernatant liquid has been pumped from the tanks. Pumping of this liquid is scheduled to be completed by April 8, 1977, at which time we will provide a sampling schedule for any additional samples that are to be obtained.

Very truly yours,

EJ Hoseinin for.

C. W. Malody
Manager - Production and
Waste Management

CWM:JEM:bac

cc: JC Cummings, ERDA-RL

9111210704

APPENDIX C - DETAILS OF COST ESTIMATES

THIS PAGE INTENTIONALLY
LEFT BLANK

9111.8940705

THIS PAGE INTENTIONALLY
LEFT BLANK

C.0 DETAILS OF COST ESTIMATES

C.1 SLUDGE SAMPLING

The details of the cost estimates for sludge sampling discussed in Sections 5.1.3 are provided in this Section. These costs are in constant 1989 dollars. These cost estimates are used in Section C.2, which provides details of the overall cost of decommissioning.

C.1.1 Sample Sludge After Grout Removal

DESCRIPTION	Cost, $	Total, $
1.) Equipment (2 samples):		
a.) Outer barrels (24 ft SST)	900	
b.) Drill rod (80 ft)	2,000	
c.) Inner barrels (18)	5,400	
d.) Head assemblies (18)	4,550	
e.) Core lifter skirts (24)	360	
f.) Inner tube shoe (24)	600	13,760
2.) 6 Shifts @ $3,400/shift		20,400
3.) Set-up and Removal		22,000
4.) General (Misc.)		4,900
5.) Disposal (20 ft^3 @ $25/$ft^3$)		500
6.) Engineering Field Services Group Consultation		6,600
7.) Reports		24,000
TOTAL		92,160

C.1.2 Sample Sludge Before Grout Removal

DESCRIPTION	Cost, $	Total, $
1.) Equipment (2 samples):		
a.) Outer barrels (24 ft SST)	1,800	
b.) Inner barrels (18)	10,800	
c.) Head assemblies (18)	7,000	
d.) Core lifter skirts (24)	720	
e.) Inner tube shoe (24)	1,200	21,520
2.) 12 Shifts @ $3,400/shift		40,800
3.) Set-up and Removal		22,000
4.) General (Misc.)		4,900
5.) Disposal (25 ft^3 @ $25/$ft^3$)		625
6.) Engineering Field Services Group Consultation		6,600
7.) Reports		24,000
TOTAL		120,445

9111894070 6

C.2 DECOMMISSIONING COST ESTIMATES

The details of the cost estimates for all of the options discussed in Sections 5.1 and 6.1 are provided in this Section. These costs are in constant 1989 dollars and are for engineering, construction, installation, and operations. A support cost of approximately $281,300 as detailed in Table 5-2, should be added to each of these costs.

C.2.1 Recommended Decommissioning Method - Mine Grout/Characterize Sludge (Figure 5-1)

Prior to removing sludge from the bottom of Tank 241-CX-72, the grout above the sludge will gradually be broken up and airlifted from the tank into approved burial containers (Phase 1). The sludge and tank will then be sampled and characterized (Phase 2). After characterization is complete, a procedure for removing the sludge will be defined (Phase 3). A method for retrieval of the sludge layer cannot be specified until the completion of Phase 2. However, three options for sludge retrieval are discussed in Section 5.1.4 and the cost estimates for each of these options are provided in Sections C.2.1.1 through C.2.1.3.

DESCRIPTION	Cost, $	Total, $
1.) Characterize sludge:		
a.) Core sample after removing grout (2 holes).	92,160	
b.) Analytical calculations based on gamma and neutron measurements.	1,000	
c.) Laboratory analysis; Sludge concentration, elements, hazardous material components, and grout consistency.	10,000	103,160
2.) Verify tank integrity:		
a.) Retrieve lower portion of actuator rod or dry well during grout removal and analyze for corrosion of material. Correlate to tank wall	8,000	
b.) Ultrasonic test in drywell to determine corrosion of wall. Correlate to tank wall.	3,000	
c.) Calculations: Based on new tank with assumptions as to the present condition of the tank and components.	5,000	
d.) Visually inspect tank wall during removal of grout.	1,000	17,000
3.) Verify caisson integrity:		
a.) Core drill a minimum of 3 holes around the outside and below caisson and sample for leakage.	5,000	
b.) Remote TV, boroscope, and/or contact smear sample annulus between tank and caisson.	3,000	8,000
4.) Excavation:		
a.) Excavate to top of tank for installation of a temporary 10' diameter x 15' long caisson.	12,000	
b.) Remove tank cover (cut out with torch, check for combustible material or gases).	8,600	20,600
5.) Containment Building:		
a.) Weather tight containment, (greenhouse) with concrete floor, located at grade level above tank, approximately 20' x 20' x 8'.	8,800	
b.) Fabricate and install temporary 10' diameter x 15' long caisson. Seal to tank caisson and containment building floor.	6,000	
c.) 2 Stage HEPA filtration with air flow of 320 CFM.	25,000	39,800

9111194070 7

DESCRIPTION	Cost, $	Total, $
6.) Grout Mining Equipment:		
a.) Drilling equipment		
Rotary drilling truck w/12 inch diameter auger.	60,000	
b.) Grout retrieving equipment:		
Airlift (vacuum).	4,000	
Cyclone separator system.	12,000	76,000
7.) Reseal tank after taking sludge samples.	2,000	2,000
8.) Burial/Storage Containers:		
a.) For solid waste (55 gallon drums LLW & HLW).	20,000	
b.) Burial container with HEPA filters.	10,000	30,000
9.) Waste Transportation:		
a.) To burial, solid waste.	1,600	1,600
Subtotal		298,160
Civil Engineering (25% of 298,160)		74,540
Mechanical Engineering (40% of 298,160)		119,264
Subtotal		491,964
G & A / CSP (26% of 491,964)		127,911
Subtotal		619,875
Contingencies (35% of 619,875)		216,956
TOTAL (PHASES 1 AND 2)		836,831

9111894070 8

C.2.1.1 Phase 3, Option 1 - Sluice Sludge

DESCRIPTION	Cost, $	Total, $
10.) Sluicing system:		
a.) Use hydrant water for sluicing head.	1,000	
b.) Sluicing head, 100 psi. inlet supply, wand w/2 sluicing nozzles with approximately 1200 psi. outlet pressure.	5,000	
c.) 4" diameter vertical turbine pump with particulate filter screens. Top mounted motor, 50 - 60 foot head, 5 - 10 gpm.	15,000	21,000
11.) Decontamination equipment:		
a.) Spray ring; water wash, same as sluicing head, located above tank, used to clean sluicing equipment during removal from tank. Wash water to drain back into tank.	5,000	5,000
12.) Liquid waste transfer piping:		
a.) 2" Air operated diaphragm type pump to pump sludge. Pump located at tank CX-72.	12,000	
b.) 2" schedule 40, encased pipe, from diaphragm type pump to isolation point number 15 (Approx. 65 feet). Install above ground and berm for shielding.	4,000	
c.) Piping exists between isolation point number 15 and TK-003-CR in the 244-CR Vault.	--0--	16,000
13.) Cleanliness verification:		
a.) Remote TV, boroscope, or contact smear sample.	40,000	40,000
14.) Decommission Tank:		
a.) Re-sample for leakage around caisson in previously core drilled holes.	2,000	
b.) After removal of sludge and re-sampling for leakage around caisson, pump grout into void left by sludge removal and drilled holes.	5,000	
c.) Seal weld surface openings in tank.	4,000	
d.) Remove containment building.	6,000	17,000
Subtotal		99,000
Civil Engineering (25% of 99,000)		24,750
Mechanical Engineering (40% of 99,000)		39,600
Subtotal		163,350
G & A / CSP (26% of 163,350)		42,471
Subtotal		205,821
Contingencies (35% of 205,821)		72,037
TOTAL (PHASE 3)		277,858
TOTAL (PHASES 1, 2, AND 3)		1,114,689

9111307409

C.2.1.2 Phase 3, Option 2 - Rock Drill Sludge

DESCRIPTION	Cost, $	Total, $
10.) Sludge Mining equipment:		
a.) Sludge drilling equipment Rotary rock drilling truck and drill string.	65,000	65,000
11.) Burial/Storage Containers:		
a.) TRU Storage container (55 gallon shielded drums).	30,000	30,000
12.) Waste Transportation:		
a.) To storage, TRU.	2,500	2,500
13.) Cleanliness verification:		
a.) Remote TV, boroscope, or contact smear sample.	40,000	40,000
14.) Decommission Tank:		
a.) Re-sample for leakage around caisson in previously core drilled holes.	2,000	
b.) After removal of sludge and re-sampling for leakage around caisson, pump grout into void left by sludge removal and drilled holes.	5,000	
c.) Seal weld surface openings in tank.	4,000	
d.) Remove containment building.	6,000	17,000
Subtotal		154,500
Civil Engineering (25% of 154,500)		38,625
Mechanical Engineering (40% of 154,500)		61,800
Subtotal		254,925
G & A / CSP (26% of 254,925)		66,281
Subtotal		321,206
Contingencies (35% of 321,206)		112,422
TOTAL (PHASE 3)		433,627
TOTAL (PHASES 1, 2, AND 3)		1,270,458

9111 8 4 0 7 0

C.2.1.3 Phase 3, Option 3 - Remove Tank with Sludge, Section in Surface Containment Building (Leave Caisson in Place)

DESCRIPTION	Cost, $	Total, $
10.) Containment building:		
a.) Remove old containment building.	6,000	
b.) Weather tight containment (greenhouse) with concrete floor, located at grade level above tank, approximately 30' x 30' x 15' high. A 10' x 10' decommissioning area with 15' high x 2' thick shielding walls adjacent to the temporary caisson and a area for the upper tank section.	40,000	
c.) Lifting hoist, 60 ton with shielded cab (External).	70,000	
d.) 2 Stage HEPA filtration with air flow of 1350 CFM.	42,000	158,000
11.) Decommissioning equipment:		
a.) Diamond saw (section tank above sludge).	22,000	
b.) Welder (add cover to bottom of tank upper half).	1,200	
c.) Decontamination of equipment (sandblasting or water).	7,400	30,600
12.) Decommission tank:		
a.) Verify upper tank section is clean.	2,000	
b.) Remove upper tank section and take to burial.	5,000	
c.) Verify lower tank section is clean.	2,000	
d.) Remove lower tank section and take to burial.	5,000	
e.) Re-sample caisson and verify it is clean.	2,000	
f.) Backfill caisson to grade level.	3,600	
g.) Remove: containment building.	46,000	65,600
Subtotal		254,200
Civil Engineering (25% of 254,200)		63,550
Mechanical Engineering (40% of 254,200)		101,680
Subtotal		419,430
G & A / CSP (26% of 419,430)		109,052
Subtotal		528,482
Contingencies (35% of 528,482)		184,969
TOTAL (PHASE 3)		713,450
TOTAL (PHASES 1, 2, AND 3)		1,550,281

C.2.2 Alternative Decommissioning - Method A Mine Entire Contents (Dry Process, Figure 6-1)

DESCRIPTION	Cost, $	Total, $
1.) Characterize sludge:		
a.) Core sample after removing grout (2 holes).	92,160	
b.) Analytical calculations based on gamma and neutron measurements.	1,000	
c.) Laboratory Analysis; Sludge concentration, elements, hazardous material components, and grout consistency.	10,000	103,160
2.) Verify tank integrity:		
a.) Retrieve lower portion of actuator rod or remove dry well during grout removal and analyze for corrosion of material. Correlate to tank wall.	8,000	
b.) Ultrasonic testing in drywell to determine corrosion of drywell wall. Correlate to tank wall.	3,000	
c.) Calculations: Based on new tank with assumptions as to the present condition of the tank and components.	5,000	
d.) Visually inspect tank wall during removal of grout.	1,000	17,000
3.) Verify caisson integrity:		
a.) Core drill a minimum of 3 holes around outside and below caisson and sample for leakage.	5,000	
b.) Remote TV, boroscope, and/or contact smear sample annulus between tank and caisson.	3,000	8,000
4.) Excavation:		
a.) Excavate to top of tank for installation of a temporary 10' diameter x 15' long caisson.	12,000	
b.) Remove tank cover (cut out with torch, check for combustible material or gases).	8,600	20,600
5.) Containment Building:		
a.) Weather tight containment, (greenhouse) with concrete floor, located at grade level above tank, approximately 20' x 20' x 8'.	8,800	
b.) Fabricate and install temporary 10' diameter x 15' long caisson. Seal to tank caisson and containment building floor.	6,000	
c.) 2 Stage HEPA filtration with air flow of 320 CFM.	25,000	39,800
6.) Mining equipment:		
a.) Grout drilling equipment: Rotary drilling truck with 12 inch diameter auger.	60,000	
b.) Sludge drilling equipment: Rotary rock drilling truck and drill string.	65,000	
c.) Grout and sludge retrieval equipment:		
Airlift (vacuum).	4,000	
Cyclone separator system.	12,000	141,000
7.) Reseal tank after taking sludge samples.	2,000	2,000
8.) Burial/Storage Containers:		
a.) For solid waste (55 gallon drums LLW & HLW).	20,000	
b.) Burial container with HEPA filters.	10,000	
c.) TRU Storage container (55 gallon shielded drums).	30,000	60,000
9.) Waste Transportation:		
a.) To burial, Solid Waste.	1,600	
b.) To storage, TRU.	2,500	4,100
10.) Cleanliness verification:		
a.) Remote TV, boroscope, and/or contact smear sample.	40,000	40,000

9111189407 12

DESCRIPTION	Cost, $	Total, $
11.) Decommission Tank:		
a.) Re-sample for leakage around caisson in previously core drilled holes.	2,000	
b.) After removal of sludge and re-sampling for leakage around caisson, pump grout into void left by sludge removal and drilled holes.	5,000	
c.) Seal weld surface openings in tank.	4,000	
d.) Remove containment building.	6,000	17,000
Subtotal		452,660
Civil Engineering (25% of 452,660)		113,165
Mechanical Engineering (40% of 452,660)		181,064
Subtotal		746,889
G & A / CSP (26% of 746,889)		194,191
Subtotal		941,080
Contingencies (35% of 941,080)		329,378
TOTAL		1,270,458

9 1 1 1 3 9 4 0 7 1 3

C.2.3 Alternative Decommissioning - Method B Leave Grout in Place, Sluice Sludge Out (Figure 6-2)

DESCRIPTION	Cost, $	Total, $
1.) Characterize sludge:		
a.) Core sample through 8" risers (2 holes).	120,445	
b.) Analytical calculations based on gamma and neutron measurements.	1,000	
c.) Laboratory analysis: Sludge concentration, elements, hazardous material components, and grout consistency.	10,000	131,445
2.) Verify tank integrity:		
a.) Ultrasonic test in drywell to determine corrosion of wall, correlate to tank wall.	3,000	
b.) Calculations: Based on new tank with assumptions as to the present condition of the tank and components.	5,000	8,000
3.) Verify caisson integrity:		
a.) Core drill a minimum of 3 holes around outside and below caisson, leave casing for sampling after decommissioning and sample for leakage.	5,000	
b.) Remote TV, boroscope, and/or contact smear sample annulus between tank and caisson.	3,000	8,000
4.) Excavation and Drilling:		
a.) Excavate to top of tank for installation of a temporary 10' diameter x 15' long caisson.	12,000	
b.) Drill a 6" diameter hole 45' deep in each 8" riser for sluicing equipment, one riser for the sluicing wand the other riser for the sludge removal pump. Encase holes to prevent collapsing.	12,000	24,000
5.) Containment Building:		
a.) Weather tight containment (greenhouse) with concrete floor, located at grade level above tank, approximately 10' x 10' x 8'.	6,800	
b.) Fabricate and install temporary 10' diameter x 15' long caisson. Seal to tank caisson and containment building floor.	6,000	
c.) 2 Stage HEPA filtration w/air flow of 80 CFM.	25,000	37,800
6.) Sluicing system:		
a.) Use hydrant water for sluicing head.	1,000	
b.) Sluicing head, 100 psi. inlet supply, wand with 2 sluicing nozzles with approximately 1200 psi. outlet pressure.	5,000	
c.) 4" diameter vertical turbine pump with particulate filter screens. Top mounted motor, 50 - 60 foot head, 5 - 10 gpm.	15,000	21,000
7.) Decontamination equipment:		
a.) Spray ring; water wash, same as sluicing head, located above risers, used to clean sluicing equipment during removal from tank. Wash water to drain back into tank.	5,000	5,000
8.) Liquid waste transfer piping:		
a.) 2" Air operated diaphragm type pump to pump sludge. Pump located at tank CX-72.	12,000	
b.) 2" schedule 40, encased pipe, from diaphragm type pump to isolation point number 15 (Approx.65 feet). Install above ground and berm for shielding.	4,000	
c.) Piping exists between isolation point number 15 and TK-003-CR in the 244-CR Vault.	--0--	16,000
9.) Cleanliness verification:		
a.) Remote TV, boroscope, and/or Contact smear sample.	40,000	40,000

9111394074

DESCRIPTION	Cost, $	Total, $
10.) Decommission Tank:		
a.) Re-sample for leakage around caisson in previously core drilled holes.	2,000	
b.) After removal of sludge and re-sampling for leakage around caisson, pump grout into void left by sludge removal and drilled holes.	5,000	
c.) Seal weld surface openings in tank.	4,000	
d.) Remove containment building.	6,000	17,000
Subtotal		308,245
Civil Engineering (25% of 308,245)		77,061
Mechanical Engineering (40% of 308,245)		123,298
Subtotal		508,604
G & A / CSP (26% of 508,604)		132,237
Subtotal		640,841
Contingencies (35% of 640,841)		224,294
TOTAL		865,136

9117047015

C.2.4 Alternative Decommissioning - Method C Leave Grout in Place, Mine Sludge Out (Figure 6-3)

DESCRIPTION	Cost, $	Total, $
1.) Characterize sludge:		
a.) Core sample through 8" risers (2 holes).	120,445	
b.) Analytical calculations based on gamma and neutron measurements.	1,000	
c.) Laboratory analysis; Sludge concentration, elements, Hazardous material components, and grout consistency.	10,000	131,445
2.) Verify tank integrity:		
a.) Ultrasonic test in drywell to determine corrosion of wall. Correlate to tank wall.	3,000	
b.) Calculations: Based on new tank with assumptions as to the present condition of the tank and components.	5,000	8,000
3.) Verify caisson integrity:		
a.) Core drill a minimum of 3 holes around outside and below caisson, leave casing for sampling after decommissioning and sample for leakage.	5,000	
b.) Remote TV, boroscope, and/or contact smear sample annulus between tank and caisson.	3,000	8,000
4.) Excavation and Drilling:		
a.) Excavate to top of tank for installation of a temporary 10' diameter x 15' long caisson.	12,000	
b.) Drill a 6" diameter hole 45' deep in each 8" riser for mining equipment. Encase holes to prevent collapsing.	12,000	24,000
5.) Containment Building:		
a.) Weather tight containment (greenhouse) w /concrete floor, located at grade level above tank, approximately 10' x 10' x 8'.	6,800	
b.) Fabricate and install temporary 10' diameter x 15' long caisson. Seal to tank caisson and containment building floor.	6,000	
c.) 2 Stage HEPA filtration w/air flow of 80 CFM.	25,000	37,800
6.) Mining equipment:		
a.) Grout drilling equipment		
Rotary drilling truck w/12 inch diameter auger.	60,000	
b.) Sludge drilling equipment		
Rotary rock drilling truck and drill string	65,000	
c.) Sludge retrieval equipment		
Airlift (Vacuum)	4,000	
Cyclone separator system	12,000	141,000
7.) Reseal tank after taking sludge samples:	2,000	2,000
8.) Burial/Storage Containers:		
a.) Burial container w/HEPA filters	10,000	
b.) TRU Storage container (55 gallon shielded drums)	30,000	40,000
9.) Waste Transportation:		
a.) To storage, TRU	2,500	2,500
10.) Cleanliness verification:		
a.) Remote TV, Boroscope, and/or Contact smear sample	40,000	40,000

9111894071 6

DESCRIPTION	Cost, $	Total, $
11.) Decommission Tank:		
a.) Re-sample for leakage around caisson in previously core drilled holes.	2,000	
b.) After removal of sludge and re-sampling for leakage around caisson, pump grout into void left by sludge removal and drilled holes.	5,000	
c.) Seal weld surface openings in tank.	4,000	
d.) Remove containment building.	6,000	17,000
Subtotal		451,745
Civil Engineering (25% of 451,745)		112,936
Mechanical Engineering (40% of 451,745)		180,698
Subtotal		745,379
G & A / CSP (26% of 745,379)		193,799
Subtotal		939,178
Contingencies (35% of 939,178)		328,712
TOTAL		1,267,890

9111 8 9 4 0 7 1 1 7

C.2.5 Alternative Decommissioning - Method D Sluice Entire Contents (Wet Process, Figure 6-4)

DESCRIPTION	Cost, $	Total, $
1.) Characterize sludge:		
a.) Core sample through 8" risers (2 holes).	120,445	
b.) Analytical calculations based on gamma and neutron measurements.	1,000	
c.) Laboratory analysis; Sludge concentration, elements, hazardous material components, and grout consistency.	10,000	131,445
2.) Verify tank integrity:		
a.) Retrieve lower portion of actuator rod or remove dry well and analyze for corrosion of material. Correlate to tank wall.	15,000	
b.) Ultrasonic test in drywell to determine corrosion of wall. Correlate to tank wall.	3,000	
c.) Calculations: Based on new tank with assumptions as to the present condition of the tank and components.	5,000	23,000
3.) Verify caisson integrity:		
a.) Core drill a minimum of 3 holes around outside and below caisson, leave casing for sampling after decommissioning and sample for leakage.	5,000	
b.) Remote TV, boroscope, and/or contact smear sample annulus between tank and caisson.	3,000	8,000
4.) Excavation and Drilling:		
a.) Excavate to top of tank for installation of a temporary 10' diameter x 15' long caisson.	12,000	
b.) Drill a 6" diameter hole in each 8" riser for sluicing equipment, one riser for the sluicing wand the other riser for the sludge removal pump. Encase holes to prevent collapsing.	12,000	24,000
5.) Containment Building:		
a.) Weather tight containment (greenhouse) with concrete floor, located at grade level above tank, approximately 10' x 10' x 8'.	6,800	
b.) 2 Stage HEPA filtration with air flow of 80 CFM.	25,000	31,800
6.) Sluicing system:		
a.) Use hydrant water for sluicing head.	1,000	
b.) Sluicing head, 100 psi.inlet supply, wand with 2 sluicing nozzles with approximately 1200 psi. outlet pressure.	5,000	
c.) 4" diameter vertical turbine pump with particulate filter screens. Top mounted motor, 50 - 60 foot head, 5 - 10 gpm.	15,000	21,000
7.) Decontamination equipment:		
a.) Spray ring; water wash, same as sluicing head, located above risers, used to clean sluicing equipment during removal from tank. Wash water to drain back into tank.	5,000	5,000
8.) Liquid waste transfer piping:		
a.) 2" Air operated diaphragm type pump to pump sludge. Pump located at tank CX-72.	12,000	
b.) 2" schedule 40, encased pipe, from diaphragm type pump to isolation point number 15 (Approx. 65 feet). Install above ground and berm for shielding.	4,000	
c.) Piping exists between isolation point number 15 and TK-003-CR in the 244-CR Vault.	--0--	16,000
9.) Cleanliness verification:		
a.) Remote TV, boroscope, or contact smear sample.	40,000	40,000

9111184074018

DESCRIPTION	Cost, $	Total, $
10.) Decommission Tank:		
a.) Re-sample for leakage around caisson in previously core drilled holes.	2,000	
b.) After removal of sludge and re-sampling for leakage around caisson, pump grout into void left by sludge removal and drilled holes.	5,000	
c.) Seal weld surface openings in tank.	4,000	
d.) Remove containment building.	6,000	17,000
Subtotal		317,245
Civil Engineering (25% of 317,245)		79,311
Mechanical Engineering (40% of 317,245)		126,898
Subtotal		523,454
G & A / CSP (26% of 523,454)		136,098
Subtotal		659,552
Contingencies (35% of 659,552)		230,843
TOTAL		890,396

9111824071 9

APPENDIX D - OTHER ALTERNATIVES CONSIDERED BUT NOT DEVELOPED

THIS PAGE INTENTIONALLY
LEFT BLANK

9111394070

THIS PAGE INTENTIONALLY
LEFT BLANK

Several sampling and retrieval options were considered but were ruled out because for various reasons. This appendix provides a synopsis of those options considered and a brief explanation of why the option was discounted.

1. Description:
Remove tank from caisson, transport in a shielded cask to 212 buildings, cut up and dispose of waste.

Discussion:
This option was rejected based on the fact that the proposed building remains as a shell that is used for storage. This facility would have to be refurbished, and a means for transferring the waste to the tank farms would have to be devised. Procurement of a shipping cask would also be required.

2. Description:
Remove tank, transport to the PUREX railroad tunnel to await disposal as part of the PUREX plant decommissioning effort.

Discussion:
This option does not actively manage the waste. It would only delay waste recovery. Procurement of a shipping cask would also be required.

3. Description:
Remove tank and transport to tank 241-CX-70. Section tank 241-CX-72, weld a sluicing attachment to the opening of the tank, rotate the tank and sluice to tank 241-CX-70.

Discussion:
This option would require remote leak-tight welds. A shielded rotation device would be required to be fabricated. The grout layer is of poor structural integrity and would probably not remain in place once the tank is sectioned. Provision for containing the grout would be required.

4. Description:
Remove tank and transport to a double shell tank. Section tank 241-CX-72, weld a sluicing attachment to the opening of the tank, rotate the tank and sluice to double shell tank.

Discussion:
Similar problems as discussed in number 3.

5. Description:
"Float" tank 241-CX-72 out of the caisson while simultaneously backfilling the caisson with drilling mud or grout.

Discussion:
This option was proposed as a possible solution to the problem of lifting the tank without knowing the structural integrity of the tank bottom. The backfill material would support the tank as it is being lifted. Use of this method would require characterization of the sludge layer since they involve the use of water. Additionally, if the bottom of the tank leaks, the mud or grout has the potential for leaching TRU

9111181041021

material from within the tank, thus creating more TRU waste in the form of the drilling mud or grout that remains in the caisson.

6. Description:
Remove tank and caisson together.

Discussion:
This option would require a large excavation which would be quite expensive.

9 1 1 1 3 2 4 0 7 2 2