# HANFORD TANK WASTE OPERATIONS SIMULATOR (HTWOS) MODEL DESIGN DESCRIPTION

**LM Bergmann**
AEM Consulting for Washington River Protection Solutions LLC
Richland, WA 99352
U.S. Department of Energy Contract DE-AC27-08RV14800

| | | | |
|---|---|---|---|
| EDT/ECN: | DRF | UC: | |
| Cost Center: | 2GB00 | Charge Code: | |
| B&R Code: | | Total Pages: | 308 |

Key Words: Hanford Tank Waste Simulator (HTWOS) Model, G2.

Abstract: This document presents the model design basis for the Hanford Tank Waste Operations Simulator (HTWOS) Version 3.0 flowsheet developed by the WRPS Modeling and System Planning Group. This Model Design Document (MDD) is an update of the RPP-17152, Rev. 0 Hanford Tank Waste Operations Simulator Version Description Document. Each update of the MDD describes the most current HTWOS major version, inputs to the simulations, limitations of the data used, and necessary assumptions. This update reflects a major rewrite to the document and is considered in development.

TRADEMARK DISCLAIMER. Reference herein to any specific commercial product, process, or service by trade name, trademark, manufacturer, or otherwise, does not necessarily constitute or imply its endorsement, recommendation, or favoring by the United States Government or any agency thereof or its contractors or subcontractors.

Release Approval 3·3·09 Date

DATE: MAR 03 2009 HANFORD RELEASE STA: 4 ID: 8

Release Stamp

**Approved For Public Release**

# HANFORD TANK WASTE OPERATIONS SIMULATOR (HTWOS) MODEL DESIGN DESCRIPTION

**R. A. Kirkbride**
**G.K. Allen**
Washington River Protection Solutions LLC

**R. M. Lowy**
**L.M. Bergmann**
AEM Consulting

**Date Published**
March 2009

Post Office Box 850
Richland, Washington

Prepared for the U.S. Department of Energy
Office of River Protection

Approved for public release; distribution unlimited

This page intentionally left blank.

# History Sheet

| Rev | Date | Reason for revision | Revised by |
|---|---|---|---|
| 0 | 18 September 2003 | Initial Issue | G.K. Allen |
| 1 | l March 2009 | Incorporation of technical bases assumptions, and requirements previously documented in the 2003 HTWOS System Design Description (RPP-17152, rev. 0), TFCOUP (HNF-SD-WM-SP-012), and the HTWOS data package for SP3 (RPP-RPT-33214). | R.M. Lowy<br>L.M. Bergman |

# EXECUTIVE SUMMARY

This document presents the model design basis for the Hanford Tank Waste Operations Simulator (HTWOS) flowsheet developed by the WRPS Modeling and System Planning Group. The HTWOS is a dynamic event-simulation model, governed by prescribed initial conditions, boundary conditions, and operating logic over the full duration of the U.S. Department of Energy, Office of River Protection (ORP) mission.

This Model Design Document (MDD) is an update of the RPP-17152, Rev. 0 *Hanford Tank Waste Operations Simulator Version Description Document*. Each update of the MDD describes the most current HTWOS major version, inputs to the simulations, limitations of the data used, and necessary assumptions. This update reflects a major rewrite to the document and is considered in development. This revision has undergone limited review and will be revised in the near term after the RPP System Plan, Revision 4 is completed which will represent a new major release of the model. Due to schedule constraints there are some TBDs in this document which will be closed out during following revisions. Additional detail of the model logic will also be added in subsequent revisions.

This document is organized by similar modeled systems. The first two sections are dedicated to the introduction (Section 1) and the general model overview and construction (Section 2). The remainder of the document is organized by similar modeled systems as follows:

- 3.0.0 Single Shell Tank System
- 4.0 Double Shell Tank System
- 5.0 Tank Farm Evaporator (242-A)
- 6.0 WTP Pretreatment
- 7.0 LAW Melter
- 8.0 LAW Off-gas Treatment Systems
- 9.0 HLW Melter
- 10.0 HLW Off-gas Treatment Systems
- 12.0 Effluent Collection Recycle & disposal
- 13.0 Supplemental Transuranic waste treatment system
- 14.0 In-Tank Strontium/TRU Precipitation
- 15.0 Supplemental Bulk Vitrification and Pretreatment systems

Within each of these sections there exist sub-sections for the process description, model description, and model assumptions and issues.

Appendix A contains the process splits tables, Appendix B contains the modeled vessel volumes and setpoint tables, Appendix C list the Assumption Matrix and provides a cross-walk for previous versions of the matrix, and Appendix D contains the HTWOS workspaces figures.

# TABLE OF CONTENTS

**1.0 INTRODUCTION 1-1**
1.1 Purpose 1-3
1.2 Document organization 1-3
1.3 Model Platform 1-4
1.4 Model Requirements 1-5
**2.0 HTWOS MODEL CONSTRUCTION 2-1**
2.1 Gensym G2 Programming Language 2-2
2.1.1 HTWOS Operating Logic ... 2-2
2.1.2 Knowledge Workspaces ... 2-2
2.1.3 Component Lists ... 2-3
2.1.4 Equipment Class ... 2-7
2.1.5 HTWOS Modules ... 2-8
2.1.6 HTWOS Procedures ... 2-9
2.1.7 HTWOS Physical Properties ... 2-9
2.2 Common Operating Rules 2-10
2.2.1 Basic Model Rules ... 2-10
2.2.2 Batch Transfers ... 2-10
2.2.3 Continuous Transfers ... 2-10
2.2.4 Splits ... 2-10
2.2.5 Chemical Additions ... 2-11
2.2.6 Chemical Reactions ... 2-11
2.2.7 Total Blend/No Blend Calculation ... 2-11
2.3 HTWOS Core Functions 2-11
2.3.1 Liquid Specific Gravity ... 2-12
2.3.2 Reaction Definitions ... 2-12
2.3.3 Mass Balance ... 2-12
2.3.4 Concentrator Procedure ... 2-13
2.3.5 Pump Procedure ... 2-13
2.3.6 Glass Formulation ... 2-14
2.3.7 Radionuclide Decay ... 2-17
2.3.8 Traceback Function ... 2-17

2.3.9 Wet Solids Calculations ..... 2-18
2.4 HTWOS To Excel® Interface 2-19
2.5 Initiating an HTWOS Model Run 2-21
2.5.1 Model Inventory Input Preparation ..... 2-21
2.5.2 The Best-Basis Inventory ..... 2-21
2.5.3 Historical Waste Transfers ..... 2-21
2.5.4 Newly Generated Waste Projections ..... 2-21
2.5.5 Wash/Leach Factors ..... 2-21
2.5.6 Volume Reconciliation ..... 2-21
2.6 General HTWOS Model Or Data Analysis Assumptions 2-21
2.6.1 Initial Waste Inventory ..... 2-21
2.6.2 Waste Compositions Estimations ..... 2-22
2.6.3 Water Content of Initial Inventory ..... 2-22
2.6.4 Volume of In-Process Streams ..... 2-22
2.6.5 Transuranic Content Accounting ..... 2-22
2.6.6 Radionuclide Decay ..... 2-22
2.6.7 Waste Chemistry and Mass Balances ..... 2-23
2.6.8 ILAW Package Production ..... 2-23
2.6.9 IHLW Canister Production ..... 2-24
2.6.10 Radionuclide Activity Associated with Product Oxides ..... 2-24
**3.0 SINGLE SHELL TANK SYSTEM 3-1**
3.1 SST Process Description 3-1
3.1.1 Modified Sluicing ..... 3-3
3.1.2 Mobile Retrieval System ..... 3-3
3.1.3 Vacuum Retrieval System ..... 3-4
3.1.4 Secondary Retrieval Technologies ..... 3-4
3.1.5 Simultaneous Retrieval ..... 3-5
3.1.6 Chemical Addition ..... 3-5
3.2 SST Model Description 3-5
3.3 SST Model Assumptions 3-6
3.3.1 SST Retrieval History ..... 3-6
3.3.2 Near Term SST Retrieval Sequencing (through 2018) ..... 3-6
3.3.3 SST Long Term Retrieval Sequence (Beyond 2019) ..... 3-7

3.3.4 Waste Retrieval Facilities ..... 3-8
3.3.5 SST Farm Upgrades ..... 3-8
3.3.6 Constraints on Simultaneous Retrieval ..... 3-8
3.3.7 Retrieval Rates ..... 3-9
3.3.8 Retrieved Solution Requirements ..... 3-13
3.3.9 Retrieval Systems Availability ..... 3-13
3.3.10 SST Residual Waste Inventory ..... 3-14
3.3.11 SST Waste Leaks ..... 3-14
**4.0 DOUBLE SHELL TANK SYSTEM 4-1**
4.1 DST process Description 4-1
4.2 DST Model Description 4-2
4.3 DST Model Assumptions and issues 4-3
4.3.1 Sodium Hydroxide Additions ..... 4-3
4.3.2 Flush Volumes ..... 4-3
4.3.3 Minimum DST Waste Level ..... 4-4
4.3.4 Maximum DST Level ..... 4-6
4.3.5 Tank Settling Endpoint ..... 4-7
4.3.6 Tank Solids Management ..... 4-8
4.3.7 Tank Space Allocation ..... 4-8
4.3.8 DST Emergency Space ..... 4-10
4.3.9 WTP Returns ..... 4-10
4.3.10 Feed Segregation and Blending ..... 4-11
4.3.11 DST Availability ..... 4-12
4.3.12 New Waste Introduced Via Deactivation ..... 4-12
4.3.13 New Waste Introduced Via Operations of 222-S ..... 4-13
4.3.14 Aging Waste Farm Condensates ..... 4-13
4.3.15 Common Use of Transfer Lines ..... 4-13
4.3.16 Waste Transfer Routes ..... 4-14
4.3.17 Waste Transfer Rates and Durations ..... 4-14
4.3.18 DST Residual Waste ..... 4-14
4.3.19 DST Upgrades for Feed Staging ..... 4-15
**5.0 TANK FARM EVAPORATOR (242-A) 5-1**
5.1 242-A Evaporator Process Description 5-1

5.2 242-A Model Description 5-2
5.3 242-A Evaporator Model Assumptions 5-3
5.3.1 Evaporator Availability 5-3
5.3.2 Evaporator Feed Staging 5-4
5.3.3 Evaporator Cold Runs 5-4
5.3.4 Evaporator Bottoms Set-Point 5-4
5.3.5 Maximum Evaporation Rate 5-4
5.3.6 Process Condensate Volume 5-5
5.3.7 242-A Atmospheric Releases 5-5
**6.0 WTP PRETREATMENT 6-1**
6.1 Pretreatment Process Description 6-1
6.1.1 LAW Feed Receipt Process (FRP) 6-1
6.1.2 HLW Lag Storage and Feed Blending Process (HLP) 6-1
6.1.3 Waste Feed Evaporation Process (FEP) 6-2
6.1.4 Ultrafiltration Process (UFP) 6-3
6.1.5 Cesium Ion Exchange (Cs-IX) System 6-3
6.1.6 Treated LAW Evaporator Process (TLP) 6-4
6.2 Pretreatment Model Description 6-4
6.2.1 LAW Feed Receipt Model Description 6-5
6.2.2 HLW Feed Receipt Model Description 6-5
6.2.3 Feed Evaporator Model Description 6-6
6.2.4 Ultrafiltration Model Description 6-6
6.2.5 Cesium ion Exchange Model Description 6-10
6.2.6 Treated LAW Evaporator Process (TLP) Model Description 6-10
6.3 WTP Waste Feed Assumptions 6-11
6.3.1 LAW Hot Commissioning and Ramp-Up 6-11
6.3.2 HLW Hot Commissioning and Ramp-Up 6-12
6.3.3 LAW Feed Delivery Sequence 6-12
6.3.4 LAW Feed Specifications 6-13
6.3.5 LAW Entrained Solids 6-16
6.3.6 HLW Feed Specifications 6-16
6.3.7 Feed Compliance Verification Sampling 6-20
6.4 Pretreatment Assumptions 6-20

6.4.1 LAW Feed Receipt Tanks ..... 6-20
6.4.2 HLW Feed Receipt Tanks/Lag Storage ..... 6-21
6.4.3 FEP and TLP Evaporator Splits ..... 6-21
6.4.4 UFP Solids Concentration and Rate ..... 6-21
6.4.5 Wash and Caustic Leach Factors ..... 6-21
6.4.6 Caustic Leaching ..... 6-22
6.4.7 Oxidative Leaching ..... 6-23
6.4.8 Cs Ion Exchange Spent Resin ..... 6-23

**7.0 LAW MELTER 7-1**

7.1 LAW Melter Process Description 7-1
7.2 LAW Melter System Model Description 7-2
7.3 LAW Melter Model Assumptions and Issues 7-6
7.3.1 LAW Melter Glass Capacity ..... 7-6
7.3.2 Melter Replacement ..... 7-7
7.3.3 ILAW Formulation and Packaging ..... 7-7
7.3.4 ILAW Glass Density ..... 7-7
7.3.5 ILAW Package Mass ..... 7-7
7.3.6 ILAW Interim Storage Capacity ..... 7-8

**8.0 LAW OFF-GAS TREATMENT SYSTEMS 8-1**

8.1 LAW Off-Gas Treatment Process Description 8-1
8.2 LAW Off-Gas Treatment Model Description 8-1
8.2.1 Submerged Bed Scrubber (LAW-SBS) ..... 8-2
8.2.2 Wet Electrostatic Precipitator (WESP) ..... 8-3
8.2.3 LAW-HEPA1/2 ..... 8-3
8.2.4 LAW-VOC-SCRUB ..... 8-3
8.2.5 LAW-NOX-SCRUBBER ..... 8-4
8.2.6 LAW Caustic Scrubber ..... 8-4
8.3 LAW Off-gas Treatment Model Assumptions and Issues 8-5

**9.0 HLW MELTER 9-1**

9.1 HLW Melter Process Description 9-1
9.2 HLW Model Description 9-2
9.3 HLW Melter Assumptions 9-6
9.3.1 HLW Melter Capacity ..... 9-6
9.3.2 IHLW Glass Density ..... 9-6

9.3.3 IHLW Canister Mass ..... 9-6
9.3.4 HLW Melter Replacement ..... 9-6
9.3.5 HLW Waste Oxide Loading Estimation ..... 9-6
9.3.6 IHLW Storage ..... 9-7
**10.0 HLW OFF-GAS TREATMENT SYSTEMS 10-1**
10.1 HLW OFF-gas treatment Process Description 10-1
10.2 Hlw Off-Gas Treatment Modeling Description 10-2
10.2.1 Submerged Bed Scrubber (HLW-SBS) ..... 10-2
10.2.2 Wet Electrostatic Precipitator (WESP) ..... 10-3
10.2.3 High-Efficiency Mist Eliminator (HEME) ..... 10-3
10.2.4 HLW-HEPA1/2 ..... 10-4
10.2.5 HLW-VOC-SCRUB ..... 10-4
10.2.6 HLW-AG-MORDENITE-COL ..... 10-4
10.2.7 HLW-NOX-SCRUBBER ..... 10-5
10.3 HLW Off-Gas Assumptions and Issues 10-5
**11.0 EFFLUENT COLLECTION RECYCLE & DISPOSAL 11-1**
11.1 Process Description 11-1
11.1.1 Plant Wash and Disposal ..... 11-1
11.1.2 Radioactive Liquid Waste Disposal ..... 11-1
11.1.3 LERF/ETF ..... 11-2
11.2 Model Description 11-3
11.2.1 HTWOS System 550 Effluent Collection ..... 11-3
11.2.2 HTWOS WTP Condensate/Stack Emissions ..... 11-3
11.3 Effluent Collection, Recycle, and Disposal Assumptions 11-4
11.3.1 ETF and LERF Capacity ..... 11-4
11.3.2 ETF Partitioning ..... 11-4
11.3.3 Oxide Solids Removal ..... 11-4
**12.0 SUPPLEMENTAL TRANSURANIC WASTE TREATMENT SYSTEM 12-1**
12.1 Supplemental TRU Treatment Process Description 12-1
12.2 Supplemental TRU Treatment Model description 12-1
12.3 Supplemental tru Sludge Processing Assumptions and Issues 12-2
12.3.1 CH-TRU Sludge Packaging Delivery ..... 12-2
12.3.2 RH-TRU Sludge Packaging Delivery ..... 12-3
12.3.3 RH-TRU Feed Preparation ..... 12-3

12.3.4 Sludge Packaging Process Assumptions ..... 12-4
**13.0 IN-TANK STRONTIUM/TRU PRECIPITATION 13-1**
13.1 In-tank strontium/tru precipitation Process description 13-1
13.2 In-tank strontium/tru precipitation model description 13-2
13.3 In-Tank Sr/TRU Precipitation Model Assumptions and Issues 13-3
13.3.1 In-Tank Sr/TRU Precipitation Demonstration Schedule ..... 13-3
13.3.2 In Tank Sr/TRU Precipitation Schedule ..... 13-3
**14.0 SUPPLEMENTAL BULK VITRIFICATION AND PRETREATMENT SYSTEMS14-1**
14.1 Process description 14-1
14.1.1 Demonstration Bulk Vitrification System (DBVS) ..... 14-1
14.1.2 Bulk Vitrification System ..... 14-2
14.1.3 East and West Area Supplemental LAW Treatment Process ..... 14-2
14.1.4 West Area Interim Pretreatment System..... 14-2
14.2 supplemental vitrification/pretreatment model description 14-3
14.2.1 Supplemental Vitrification..... 14-3
14.2.2 Interim Pretreatment Model Description ..... 14-8
14.3 supplemental vitrification/pretreatment model assumptions 14-9
14.3.1 Demonstration Bulk Vitrification Model Assumptions..... 14-9
14.3.2 Supplemental Treatment Demonstration (DBVS) Extension..... 14-9
14.3.3 East Area Supplemental Treatment Process (Bulk Vitrification)..... 14-11
14.3.4 West Area Supplemental Treatment Process..... 14-11
14.3.5 Bulk Vitrification Product Loading ..... 14-11
14.3.6 Bulk Vitrification Lid Retention..... 14-12
14.3.7 Bulk Vitrification Product Volume and Packaging ..... 14-12
14.3.8 West Area IPS Feed Delivery..... 14-12
14.3.9 Second ILAW Facility ..... 14-12
**15.0 WASTE DISPOSAL AND MISCELLANOUS INTERFACING FACILITES 15-1**
15.1 Waste Disposal Assumptions 15-1
15.1.1 Integrated Disposal Facility (IDF) ..... 15-1
15.1.2 Canister Storage Building and Hanford Shipping Facility ..... 15-1
15.1.3 Waste Encapsulation and Storage Facility..... 15-2
15.1.4 Central Waste Complex ..... 15-2
15.1.5 Yucca Mountain (Off-site Repository) ..... 15-2

15.1.6 222-S Laboratory ..... 15-2
15.1.7 Waste Isolation Pilot Plant (WIPP)..... 15-3
**16.0 REFERENCES 16-1**
APPENDIX A- HTWOS SPLITS
APPENDIX B - HTWOS MODELED VESSEL VOLUMES AND SETPOINTS
APPENDIX C- ASSUMPTION MATRIX AND CROSSWALK
APPENDIX D – HTWOS WORKSPACE FIGURES

## Table of Figures

Figure 1-1 Simplified Schematic of the River Protection Project. ..... 1-2
Figure 1-2 Architecture of HTWOS Workstations. ..... 1-4
Figure 3-1. Waste Transfer System. ..... 3-2

## Table of Tables

Table 2-1 HTWOS Component List ..... 2-3
Table 2-2 Non-Radioactive Component List ..... 2-5
Table 2-3 HTWOS Equipment Class ..... 2-7
Table 2-4 Knowledge Base Modules ..... 2-8
Table 2-5 Glass Property Constraints ..... 2-15
Table 2-6 Glass Composition Constraints. ..... 2-15
Table 3-1 Distribution of SSTs at the Hanford site. ..... 3-1
Table 3-2 SST Retrieval History and Status ..... 3-6
Table 3-3 Near-Term Single-Shell Tank Retrieval Modeling Assumptions ..... 3-7
Table 3-4 SST Retrieval Technology Assignments. (3 Sheets)..... 3-10
Table 4-1 Waste Transfer Flush Volumes. ..... 4-4
Table 4-2 Minimum Liquid Level Constraints for Specific DSTs. ..... 4-5

Table 4-3 Maximum DST Fill Levels. 4-6

Table 4-4 Double-Shell Tank Usage Allocations. (2 Sheets) 4-9

Table 4-5 Double-Shell Tank Space Allocation Criteria. 4-10

Table 4-6 Feed Control List Strategy 4-11

Table 4-7 New Waste via Deactivation. 4-12

Table 4-8 Waste Transfer Rates. 4-14

Table 5-1 242-A Evaporator Outages 5-3

Table 6-1 HTWOS-LAW-FEED Parameters 6-5

Table 6-2 HTWOS-HLW-FEED Parameters 6-5

Table 6-3UFP Model Vessel Parameters 6-7

Table 6-4 UFP Reactions 6-8

Table 6-5 Cs-Ion Exchange Components 6-10

Table 6-6. Low-Activity Waste Processing Schedule Dates for the Waste Treatment and Immobilization Plant. 6-11

Table 6-7. HLW Waste Processing Schedule Dates for the Waste Treatment and Immobilization Plant. 6-12

Table 6-8 WTP Contract Specification Table TS-7.1, Low-Activity Waste Chemical Composition, Soluble Fraction Only. 6-13

Table 6-9 WTP Contract Specification Table TS-7.2, Low-Activity Waste Radionuclide Content,1 Soluble Fraction Only. 6-15

Table 6-10 WTP Contract Specification Table TS-8.1 HLW Feed Unwashed Solids Maximum Non-Volatile Component Composition. (grams/100 g non-volatile waste oxides). 6-18

Table 6-11 WTP Contract Specification Table TS-8.2 HLW Feed Unwashed Solids Maximum Volatile Component Composition. (grams per 100 grams non-volatile waste oxides). 6-19

Table 6-12 WTP Contract Specification Table TS-8.3 HLW Feed Unwashed Solids Maximum Radionuclide Composition. (Ci/100 g non-volatile waste oxides). 6-19

Table 6-13 WTP Contract Specification Table TS-8.4 Additional HLW Feed Composition for Non-volatile Components. (g/100 g non-volatile waste oxides). 6-20

Table 6-14 Cs Ion Exchange Spent Resin Loading ..... 6-24

Table 7-1 Chemical Reactions used in HTWOS to Simulate LAW Melter Performance. ..... 7-4

Table 8-1 LAW SBS Reactions ..... 8-2

Table 8-2 LAW-WESP Reaction and Extents ..... 8-3

Table 8-3 LAW-VOC-SCRUB Reactions and Extents ..... 8-3

Table 8-4 LAW-NOX-SCRUBBER Reactions and Extents ..... 8-4

Table 8-5 LAW-CAUSTIC-SCRUBBER Reactions and Extents ..... 8-4

Table 9-1 Chemical Reactions used in HTWOS to Simulate HLW Melter ..... 9-4

Table 10-1 HLW-SBS Reactions ..... 10-2

Table 10-2 HLW-WESP Reactions and Extents ..... 10-3

Table 10-3 HLW-HEME Reactions and Extents ..... 10-3

Table 10-4 HLW-VOC-SCRUB Reactions and Extents ..... 10-4

Table 10-5 HLW-AG-MORDENITE-COL Reactions and Extents ..... 10-5

Table 10-6 HLW-NOX SCRUBBER Reactions and Extent ..... 10-5

Table 13-1 Strontium and Transuranic Precipitation Removal Factors ..... 13-2

Table 14-1 Supplemental Vitrification HTWOS Equipment ..... 14-3

Table 14-2 Bulk Vitrification Reactions ..... 14-5

Table 14-3 BV-HYDROSONIC-SCR-Reactions and Extenets ..... 14-8

Table 14-4 SCR Reactions ..... 14-8

Table 14-5 East/West Area IPS Modeled Equipment ..... 14-8

Table 14-6 Selective Dissolution Separation Assumptions. (2 Sheets) ..... 14-10

TERMS

| | |
|---|---|
| BBI | Best-Basis Inventory |
| BCR | Baseline Change Request |
| BNI | Bechtel National, Inc. |
| CH | Contact-handled |
| CSB | Canister Storage Building |
| DOE | U.S. Department of Energy |
| DST | double-shell tank |
| ETF | Effluent Treatment Facility |
| FY | fiscal year |
| HLW | high-level waste |
| HTWOS | Hanford Tank Waste Operations Simulator |
| IHLW | immobilized high-level waste |
| ILAW | immobilized low-activity waste |
| LAW | low-activity waste |
| LERF | Liquid Effluent Retention Facility |
| LLW | low-level waste |
| NRC | U.S. Nuclear Regulatory Commission |
| ORP | U.S. Department of Energy, Office of River Protection |
| RH | remote-handled |
| RPP | River Protection Project |
| SALDS | state approved disposal site |
| SST | single-shell tank |
| TFC | Tank Farm Contractor |
| TFCOUP | Tank Farm Contractor Operation and Utilization Plan |
| TRU | transuranic |
| WIPP | Waste Isolation Pilot Plant (Carlsbad, New Mexico) |
| WRF | Waste Retrieval Facility |
| WRPS | Washington River Protection Solutions |
| WTP | Waste Treatment and Immobilization Plant |

## Units

| | |
|---|---|
| Ci | curies |
| Kgal | kilogallon (1,000 gallons) |
| m3 | cubic meters |
| Mgal | million gallons |
| MT | metric ton |
| MTG | metric tons of glass |
| MTG/d | metric tons of glass per day |
| wt% | weight percent |

GLOSSARY

Attribute: A characteristic or property of an item (any object, connection, workspace etc.) in a G2 KB. An item's set of attributes is defined by the item's class.

Classes: G2 categorizes items into *classes* to facilitate automated reasoning about the items. Every class has a set of properties called attributes that are common to all members of the class (ex. Size, weight, status).

Clock tick: The fundamental init of time within G2. The time interval of each clock tick is determined by the user-settable attribute of the Timing Parameters system table.

Icon: The graphical representation of objects and items of other system-classes with an iconic representation style. In G2, items of many system-defined classes appear as icons. The icon-editor is used to define the icon for user-defined subclasses of the *object* class.

Inheritance: Classes are organized according to common properties (class hierarchy). The highest class (root class) has only the attributes and methods common to all classes in the hierarchy. The root class has subclasses, each of which *inherit* those attributes and methods of the root class and may define additional attributes and/or methods specific to its purpose. Attributes and methods inherited by a subclass from a more general class are called *inherited attributes* and *inherited methods*. G2 allows a subclass to have any number of direct parents

Input interface object: An object that a G2 file interface utility uses to read data from an external data file and to provide data service for variables and parameters in a KB.

Instance: One of a class of items, for example, tank-1 is the first instance of the pump class.

Interface object: An object that G2 uses as an interface between a KB and an external data file.

Item: An entity that represents a set of knowledge that has identity and that persists. Each item represents a set of information that is distinct from other information and that you can reference directly or indirectly.

Knowledge Base (KB): A set of *items* that is either contained in G2's memory (the current KB) or stored in a KB file. All components of a knowledge base exist as *items*. The knowledge and data in a knowledge base are represented by special items called *objects*. Items and objects can appear graphically as *icons*.

Methods: Procedures that define what items do and how they change (ex. clean, fill, empty).

Modules: An entity in a KB that G2 automatically associates with a set of system tables and optionally with a set of top-level workspaces. Modules contain a set of related items that together comprise a KB. For example, an empty KB could be populated by three modules. One module might contain class definitions; one module might contain instances; and the third might include rules, procedures, and methods. Modules facilitate KB development and reusability; when several developers are working on a single application, each can work on separate modules which later are combined to form the single application. In addition, single modules can be used across multiple applications.

Object: A concrete or abstract thing of interest in an application, such as a product, event, or container. Every object has an attribute table, and may have an icon and connection stubs. Every object is an instance of a class, which is defined through an object definition.

OH(B0UND): hydroxide bounded to solid waste components entrained in the liquid phase)

Output interface object: An object that a G2 file interface utility uses top obtain values from variable and parameters in a KB and write them to an external data file.

Platform: A combination of a brand of computer and a brand of operating system. G2 can run on a variety of Unix, VMS, and Windows platforms.

Procedure: A list of statements that G2 can execute, either in sequence or concurrently, on zero or more arguments supplied when the procedure is invoked.

Stub: An extendable connection segment at the edge of an object. Object definitions identify the number, appearance, and placement of connection stubs on a class of objects. Stubs can also be added and deleted for individual objects.

Workspaces: An item in G2 that organizes a set of items within an abstract, three-dimensional region. Alternately, the blank pages upon which objects are create, maintained, and organized. A workspace both contains items and arranges them schematically with respect to each other. A knowledge base can contain one or many workspaces, thus the KB is said to contain a hierarchy of workspaces. A workspace appears in a G2 window as a bounded rectangle. The objects on workspaces are capable of having their own subsidiary workspaces. Workspaces can contain anything from text messages to entire schematics that model real-time activities.

# 1.0 INTRODUCTION

This document presents the model design basis for the Hanford Tank Waste Operations Simulator (HTWOS) flowsheet developed by the WRPS Modeling and System Planning Group. The HTWOS is a dynamic event-simulation model, governed by prescribed initial conditions, boundary conditions, and operating logic over the full duration of the U.S. Department of Energy, Office of River Protection (ORP) mission.

The HTWOS model accounts for the major systems that are required to accomplish the RPP mission to store, process and immobilize the Hanford tank wastes for disposal. The major systems modeled within the HTWOS are summarized in Figure 1-1.

The HTWOS model simulates the movement of waste material through the tank farm system in support of single-shell tank (SST) retrieval (salt well pumping), 242-A evaporator operation, waste retrieval from double-shell tank (DST) farms, and feed delivery to the Waste Treatment Plant (WTP). The model enables an evaluation of impacts to process throughput due to event-driven activities such as pumping, sampling, storage, recycle, separation, and chemical reactions. The HTWOS model shows how application of the assumptions for each processing system within the waste treatment complex affects the operations of the rest of the tank farm system.

HTWOS uses information about waste properties, system configurations, desired end states, target milestones, and other parameters associated with waste processing scenarios to:

- Simulate the waste storage, retrieval, feed staging, and treatment processes,
- Evaluate the relationship between tank waste retrieval and treatment activities,
- Link and evaluate new facility capacities; project requirements and schedules; and treatment contractor integration
- Evaluate integration across multiple process steps and programs,
- Verify existing plans for accomplishing the RPP mission, and
- Develop future plans.

**Figure 1-1 Simplified Schematic of the River Protection Project.**

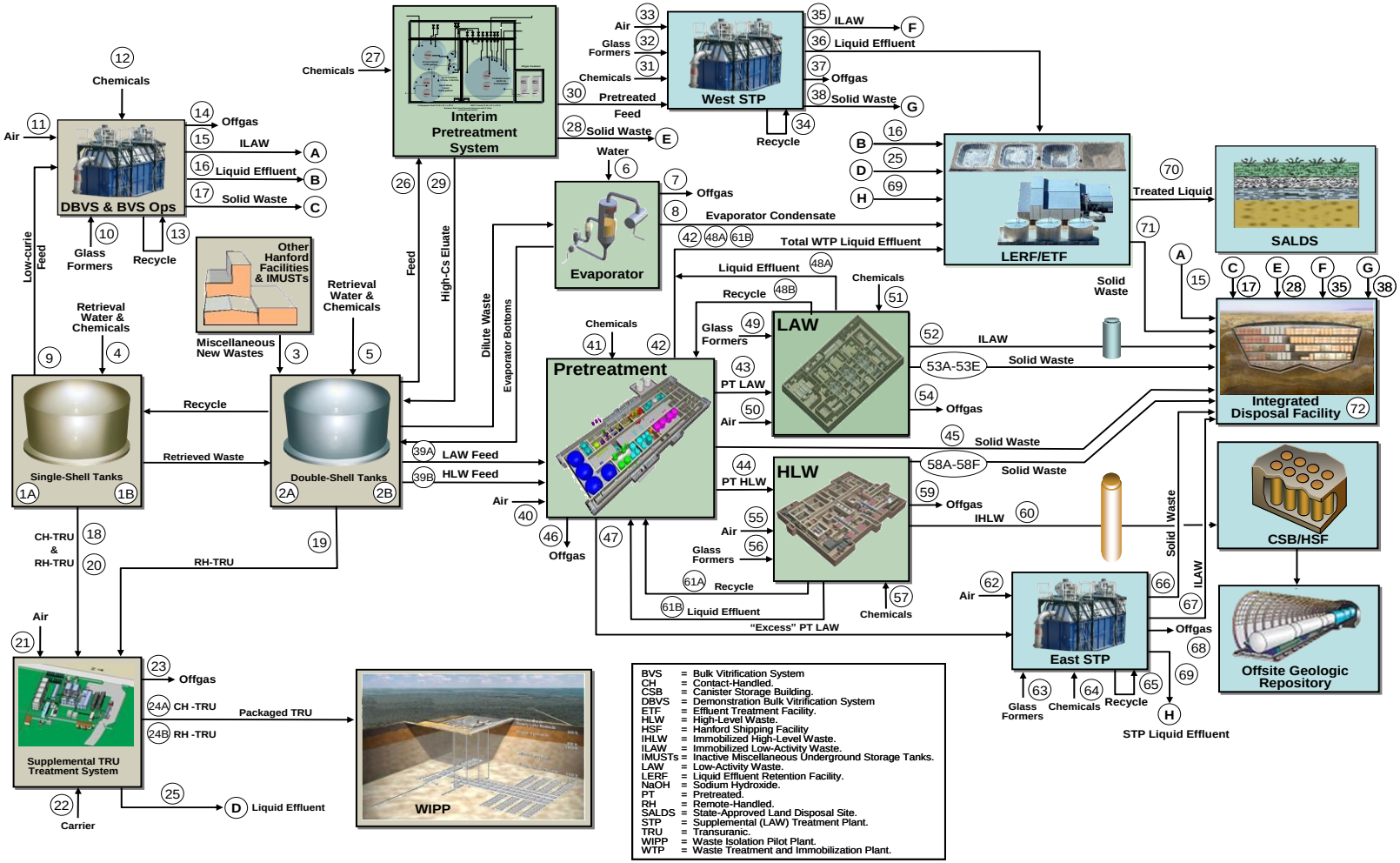

## 1.1 PURPOSE

The purpose of this model design description (MDD) document is to describe the as-built design of HTWOS, version 3.0. This MDD is an update of the RPP-17152, Rev. 0 *Hanford Tank Waste Operations Simulator Version Description Document*. Each update of the MDD describes the most current HTWOS major version, inputs to the simulations, limitations of the data used, and necessary assumptions. This update reflects a major rewrite to the document and is considered in development. This revision has undergone limited review and will be revised in the near term after the RPP System Plan, Revision 4 is completed which will represent a new major release of the model. Due to schedule constraints there are some TBDs in this document which will be closed out during following revisions. Additional detail of the model logic will also be added in subsequent revisions.

The HTWOS model Version 3.0 has undergone Verification and Validation (V&V) as specified in the RPP-RPT-39908, *Hanford Tank Waste Operations Simulator Model (HTWOS) Version 3.0 Verification and Validation Report.*

## 1.2 DOCUMENT ORGANIZATION

This document is organized by similar modeled systems. The first two sections are dedicated to the introduction (Section 1) and the general model overview and construction (Section 2). The remainder of the document is organized by similar modeled systems as follows:

- 3.0.0 Single Shell Tank System
- 4.0 Double Shell Tank System
- 5.0 Tank Farm Evaporator (242-A)
- 6.0 WTP Pretreatment
- 7.0 LAW Melter
- 8.0 LAW Off-gas Treatment Systems
- 9.0 HLW Melter
- 10.0 HLW Off-gas Treatment Systems
- 12.0 Effluent Collection Recycle & disposal
- 13.0 Supplemental Transuranic waste treatment system
- 14.0 In-Tank Strontium/TRU Precipitation
- 15.0 Supplemental Bulk Vitrification and Pretreatment systems

Within each of these sections there exist sub-sections for the process description, model description, and model assumptions and issues.

Appendix A contains the process splits tables, Appendix B contains the modeled vessel volumes and setpoint tables, Appendix C list the Assumption Matrix and provide a cross-walk for previous versions of the matrix, and Appendix D contains the HTWOS workspaces figures.

## 1.3 MODEL PLATFORM

The HTWOS model is programmed with the commercially-available G2 software package developed by GenSym. G2 is an object-oriented artificial intelligence programming language. The HTWOS model runs on Intel-based computers using the Windows operating system. Model results of HTWOS are stored on the Chief Modelers computer in a common area on this system accessible by personnel connected to the Hanford Local Area Network (HLAN).

Window based machines are cross-mounted over the Hanford Site intranet. The HTWOS system uses standard features of HLAN to transfer data, access network printers, and perform automatic backups of the system. Each modeling computer's hard drive is partitioned into a home area and an optional software area. Both the home and the software areas of each machine can be exported to, and are visible by, the other machines.

Figure 1-2 is a graphical illustration showing the main network capabilities required to use HTWOS efficiently. It is not meant to be an exact representation of the HTWOS hardware system.

**Figure 1-2 Architecture of HTWOS Workstations.**

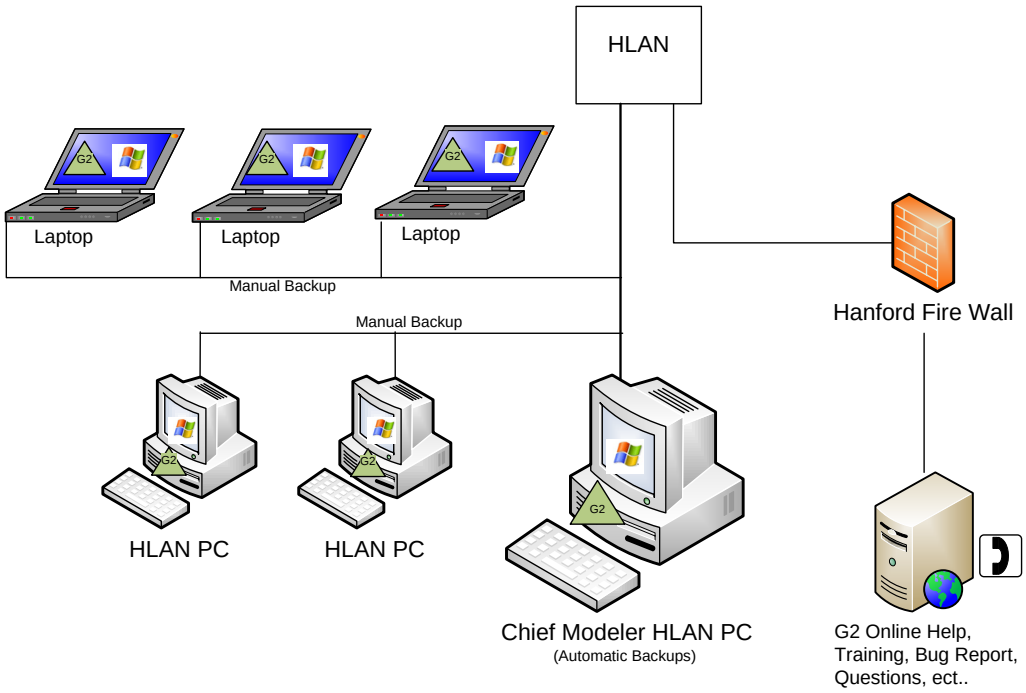

## 1.4 MODEL REQUIREMENTS

The Tank Operations Contractor is required to submit to DOE-ORP the deliverables and satisfy the indirect requirements listed in Table C-5 of the DOE-ORP Contract Number DE-AC27-08RV14800. These deliverables include the Integrated SST Retrieval Plan, the RPP System Plan, the Integrated Waste Feed delivery Plan, and the WTP Facility Transition plan.

The HTWOS model supports the completion of these deliverables in addition to supporting RPP planning by providing output results that describe:

- Delivery dates for Tank Farm waste batches
- Tank utilization
- Volume history data for key process vessels
- Process throughputs
- Control logic (e.g., waste feed delivery sequencing)
- Cumulative mass transfer for every process stream
- Cumulative glass volumes and canister/package counts
- Mass and radioactivity of waste processed at milestone dates
- Sodium molarity and weight percent (wt %) solids for key process vessels
- Waste loading and associated WTP contract technical specification limits of the glasses
- Evaporator concentrate data (i.e., sodium concentration and Specific Gravity [Sp]
- Chemical reagent, process condensate, and water utilization
- Cesium ion exchange resin utilization
- Mineral glass former utilization
- Volumes and compositions of treated low-activity waste (LAW) and LAW Submerged Bed Scrubber (SBS) recycles to the Supplemental LAW facility
- Volumes and compositions of WTP effluent to Liquid Effluent Retention Facility (LERF) and Effluent Treatment Facility (ETF)
- Offgas quantities and compositions to the stacks.
- Flowsheet development

# 2.0 HTWOS MODEL CONSTRUCTION

HTWOS operates as both a dynamic continuous-simulator and as a dynamic event-simulator. As HTWOS transfers material from one storage tank to the next, it functions as a continuous-simulator. The material is pumped continuously until the stop pump conditions are reached. HTWOS then takes on the functionality of a dynamic event-simulator by evaluating the current conditions of both the source and receipt tank, looking at the current conditions of the remaining tanks in the tank farm system, and deciding what the next action will be for both the source and receipt tank.

The HTWOS model adheres to physical constraints inherent to the equipment and safety limitations, and to the programmatic constraints from current plans or business strategies. Using a set of technical and programmatic assumptions, the HTWOS model calculates the flow of events occurring during the retrieval, storage, pretreatment, vitrification, and supplemental treatments of Hanford Site tank waste. Technical and programmatic assumptions include, but are not limited to, capacity, volume, and performance, dates of availability, outages, and commissioning. Boundary conditions include:

- the physical limits of the flowsheet design, such as connections between unit operations, volumes of vessels, flowrates of pumps, capacities and efficiencies of the equipment, and
- physical and chemical environments that impact separations, phase equilibriums, and reaction extents.

Specialized data such as variable flux rates, aluminum and oxalate phase equilibriums, chemical composition data in any process stream, utilization of process equipment in any time interval, evaporator concentrate saturation, and high-level waste (HLW) glass limiting factors, can also be collected for specific unit operations of interest.

Results from the model can be used to prepare flowsheets and mass balances for the whole mission or for parts of the mission. The unit operations within the following process subsystems are described in the following sections.

- Single Shell Tank (SST) System
- Double shell Tank (DST) System
- 242-A Evaporator
- WTP-Pretreatment
- WTP-LAW Melter
- WTP-HLW Melter
- TRU Sludge Processing
- Offgas Treatment
- Other Supplemental Treatment

The overall configuration and process flow assumed for the waste treatment complex is shown in River Protection Project Simplified Process Flow Diagram (Figure 1.1).

## 2.1 GENSYM G2 PROGRAMMING LANGUAGE

HTWOS is programmed using the Gensym G2 coding language. Programming techniques such as modularization, class hierarchy and inheritance, encapsulation and information hiding, multi-thread and parallel computing, and process synchronization are utilized. Web link capabilities are included to allow remote monitoring of model runs. G2 applications are stored in American Standard Code for Information Interchange (ASCII) files with a .kb extension.

### 2.1.1 HTWOS Operating Logic

The HTWOS model is coded into knowledge base (KB) workspaces using the G2 object-oriented programming platform. The HTWOS model software contains objects, procedures, modules, and logic blocks. An object is a defined data structure that has an associated graphical representation (for example, a waste tank and its associated waste inventory). A procedure is computer code written to perform a calculation when called by an event, or when a condition exists at some point in the model. A logic block is a collection of procedures that will be applied to a set of tank objects to accomplish a specific purpose.

### 2.1.2 Knowledge Workspaces

A KB workspace is a two-dimensional area in which:

- objects and definitions are placed
- the graphical user interface (GUI) objects, such as equipment, unit operations, systems, and their connections, are built
- all the information needed to run an HTWOS application is contained.

KBs workspaces come in several different forms in the G2 platform:

- Object – defined data structure that has an associated graphical representation
- Attribute: an object's data (e.g., a tank object contains all the data that defines the tank, such as volume, minimum headspace, number of tanks), and
- Operations: rules, methods, and procedures under which the object will behave during the simulation (e.g., a tank object contains all the operations that the tank can perform, such as pump, empty).
- Definitions - Definitions describe the common features of objects (e.g., all the tanks have volumes, all pipes have flowrates, and all pumps have pump procedures).
- Operations - Operations are the codes that perform the computation using rules, methods, and procedures.
- Graphical user interface - GUIs enable the user to interact with the application.

Animations with layered and vector-based graphics are programmed for visualization of the waste treatment complex operation during simulation. User-friendly graphical interfaces (GUI) including pull-down/pop-up menus, spreadsheet input/output, selection boxes, and action buttons are also provided.

HTWOS permits the following actions when programming workspaces:

- Move a workspace by dragging it to a desired place within Windows.
- Manipulate workspaces by using the KB workspace menu, (e.g., to hide, print, lift to top, and drop to bottom).
- Obtain the KB workspace menu by single-clicking the background area within a workspace
- Make a workspace entirely visible ("lift to top" command) or bring up a workspace which is covered by the active workspace ("drop to bottom" command)
- Remove a workspace from Windows by using the hide command.
- Print the active workspace.

Appendix D shows all of the major system workspaces.

### 2.1.3 Component Lists

Table 2-1 and Table 2-2 list all of the components in HTWOS, and the SpG, specific activity, and Gamma energy if applicable.

**Table 2-1 HTWOS Component List**

| Radioactive Component | Molecular weight | Half Life in years | Sp Activity in Ci/gm | Integrated Gamma Energy in MeV |
|---|---|---|---|---|
| 106-Ru | 1.06E+02 | 1.02E+00 | 3.31E+03 | 0 |
| 113m-Cd | 1.12E+02 | 1.41E+01 | 2.24E+02 | 0 |
| 125-Sb | 1.22E+02 | 2.76E+00 | 1.04E+03 | 4.33E-01 |
| 126-Sn | 1.26E+02 | 2.30E+05 | 1.23E-02 | 5.66E-02 |
| 129-I | 1.29E+02 | 1.57E+07 | 1.77E-04 | 2.46E-02 |
| 134-Cs | 1.37E+02 | 2.07E+00 | 1.29E+03 | 1.56E+00 |
| 137-Cs | 1.37E+02 | 3.01E+01 | 8.68E+01 | 0 |
| 137m-Ba | 1.37E+02 | 4.85E-06 | 5.38E+08 | 5.98E-01 |
| 14-C | 1.20E+01 | 5.72E+03 | 4.47E+00 | 0 |
| 151-Sm | 1.50E+02 | 9.00E+01 | 2.63E+01 | 1.26E-05 |
| 152-Eu | 1.54E+02 | 1.35E+01 | 1.74E+02 | 1.15E+00 |
| 154-Eu | 1.54E+02 | 8.59E+00 | 2.70E+02 | 1.25E+00 |
| 155-Eu | 1.54E+02 | 4.75E+00 | 4.86E+02 | 6.06E-02 |
| 226-Ra | 2.26E+02 | 1.60E+03 | 9.89E-01 | 6.75E-03 |
| 227-Ac | 2.27E+02 | 2.18E+01 | 7.23E+01 | 2.69E-04 |
| 228-Ra | 2.26E+02 | 5.76E+00 | 2.72E+02 | 6.67E-09 |
| 229-Th | 2.32E+02 | 7.30E+03 | 2.14E-01 | 9.48E-02 |
| 231-Pa | 2.31E+02 | 3.28E+04 | 4.72E-02 | 3.72E-02 |
| 232-Th | 2.32E+02 | 1.40E+10 | 1.10E-07 | 1.20E-03 |
| 232-U | 2.38E+02 | 6.98E+01 | 2.21E+01 | 1.78E-03 |
| 233-U | 2.38E+02 | 1.59E+05 | 9.64E-03 | 7.18E-04 |
| 234-U | 2.38E+02 | 2.46E+05 | 6.21E-03 | 1.48E-03 |

**Table 2-1 HTWOS Component List**

| Radioactive Component | Molecular weight | Half Life in years | Sp Activity in Ci/gm | Integrated Gamma Energy in MeV |
|---|---|---|---|---|
| 235-U | 2.38E+02 | 7.04E+08 | 2.16E-06 | 1.54E-01 |
| 236-U | 2.38E+02 | 2.34E+07 | 6.47E-05 | 1.37E-03 |
| 237-Np | 2.37E+02 | 2.14E+06 | 7.05E-04 | 3.30E-02 |
| 238-Pu | 2.39E+02 | 8.77E+01 | 1.71E+01 | 1.60E-03 |
| 238-U | 2.38E+02 | 4.47E+09 | 3.36E-07 | 1.21E-03 |
| 239-Pu | 2.39E+02 | 2.41E+04 | 6.21E-02 | 6.54E-04 |
| 240-Pu | 2.39E+02 | 6.56E+03 | 2.27E-01 | 1.53E-03 |
| 241-Am | 2.41E+02 | 4.33E+02 | 3.43E+00 | 2.81E-02 |
| 241-Pu | 2.39E+02 | 1.44E+01 | 1.03E+02 | 0 |
| 242-Cm | 2.44E+02 | 1.41E+02 | 3.31E+03 | 1.67E-03 |
| 242-Pu | 2.39E+02 | 3.75E+05 | 3.94E-03 | 1.24E-02 |
| 243-Am | 2.41E+02 | 7.37E+03 | 2.00E-01 | 5.83E-02 |
| 243-Cm | 2.44E+02 | 2.91E+01 | 5.06E+01 | 1.33E-01 |
| 244-Cm | 2.44E+02 | 1.81E+01 | 8.10E+01 | 1.49E-03 |
| 3-H | 1.01E+00 | 1.23E+01 | 9.62E+03 | 0 |
| 59-Ni | 5.87E+01 | 7.60E+04 | 7.97E-02 | 2.37E-03 |
| 60-Co | 5.89E+01 | 5.27E+00 | 1.13E+03 | 2.51E+00 |
| 63-Ni | 5.87E+01 | 1.00E+02 | 5.67E+01 | 0 |
| 79-Se | 7.90E+01 | 2.90E+05 | 1.56E-02 | 0 |
| 90-Sr | 8.76E+01 | 2.88E+01 | 1.38E+02 | 0 |
| 90-Y | 9.00E+01 | 7.31E-03 | 5.43E+05 | 0 |
| 93-Zr | 9.12E+01 | 1.50E+06 | 2.56E-03 | 0 |
| 93m-Nb | 9.29E+01 | 1.61E+01 | 2.39E+02 | 1.95E-03 |
| 99-Tc | 9.90E+01 | 2.13E+05 | 1.70E-02 | 5.36E-07 |

**Table 2-2 Non-Radioactive Component List**

| Non-Rad Component | MW | Non-Rad Component | MW |
|---|---|---|---|
| Ac2O3 | 5.02E+02 | Mn+4 | 5.49E+01 |
| Ag+ | 1.08E+02 | MnO2 | 8.69E+01 |
| Ag2O | 2.32E+02 | MnO4- | 1.19E+02 |
| Al(OH)4- | 9.50E+01 | Mo+6 | 9.59E+01 |
| Al+3 | 2.70E+01 | MoO3 | 1.44E+02 |
| Al2O3 | 1.02E+02 | N2 | 2.80E+01 |
| Am2O3 | 5.30E+02 | Na+ | 2.30E+01 |
| Ar | 3.99E+01 | Na2O | 6.20E+01 |
| As+5 | 7.49E+01 | Nb2O5 | 2.66E+02 |
| As2O5 | 2.30E+02 | Nd+3 | 1.44E+02 |
| B+3 | 1.08E+01 | Nd2O3 | 3.36E+02 |
| B2O3 | 6.96E+01 | NH3 | 1.70E+01 |
| Ba+2 | 1.37E+02 | NH4+ | 1.80E+01 |
| BaO | 1.53E+02 | Ni+2 | 5.87E+01 |
| Be+2 | 9.01E+00 | NiO | 7.47E+01 |
| BeO | 2.50E+01 | NO | 3.00E+01 |
| Bi+3 | 2.09E+02 | NO2 | 4.60E+01 |
| Bi2O3 | 4.66E+02 | NO2- | 4.60E+01 |
| C10H12N2O8-4 | 2.88E+02 | NO3- | 6.20E+01 |
| C10H15N2O7-3 | 2.75E+02 | NpO2 | 2.69E+02 |
| C12H27O4P | 2.66E+02 | O(BOUND) | 1.60E+01 |
| C13H28 | 1.84E+02 | O2 | 3.20E+01 |
| C2Cl4 | 1.66E+02 | OH(BOUND) | 1.70E+01 |
| C2H3O2- | 5.90E+01 | OH- | 1.70E+01 |
| C2H3O3- | 7.50E+01 | P2O5 | 1.42E+02 |
| C2HCl3 | 1.31E+02 | Pb+2 | 2.07E+02 |
| C2O4-2 | 8.80E+01 | PbO | 2.23E+02 |
| C3H6O | 5.81E+01 | Pd+2 | 1.06E+02 |
| C4H10O | 7.41E+01 | PdO | 1.22E+02 |
| C4H8O | 7.21E+01 | PO4-3 | 9.50E+01 |
| C5H5N | 7.91E+01 | Pr+3 | 1.41E+02 |
| C6H5NO2 | 1.23E+02 | Pr2O3 | 3.30E+02 |
| C6H5O7-3 | 1.89E+02 | Pu+4 | 2.39E+02 |
| C6H6 | 7.81E+01 | PuO2 | 2.71E+02 |
| C7H6N2O4 | 1.82E+02 | Rb+ | 8.55E+01 |
| C7H8O | 1.08E+02 | Rb2O | 1.87E+02 |

**Table 2-2 Non-Radioactive Component List**

| Non-Rad Component | MW | Non-Rad Component | MW |
|---|---|---|---|
| Ca+2 | 4.01E+01 | Re2O3 | 4.20E+02 |
| CaO | 5.61E+01 | Rh+3 | 1.03E+02 |
| Cd+2 | 1.12E+02 | Rh2O3 | 2.54E+02 |
| CdO | 1.28E+02 | Ru+3 | 1.06E+02 |
| Ce+3 | 1.40E+02 | Ru2O3 | 2.60E+02 |
| CeO2 | 1.72E+02 | Sb+5 | 1.22E+02 |
| CH2Cl2 | 8.49E+01 | Sb2O3 | 2.92E+02 |
| CHCl3 | 1.19E+02 | Se+6 | 7.90E+01 |
| CHO2- | 4.50E+01 | SeO2 | 1.11E+02 |
| Cl- | 3.55E+01 | Si+4 | 2.81E+01 |
| Cm2O3 | 5.36E+02 | SiO2 | 6.01E+01 |
| CN- | 2.60E+01 | Sm2O3 | 3.49E+02 |
| CO | 2.80E+01 | SnO2 | 1.58E+02 |
| Co+3 | 5.89E+01 | SO2 | 6.41E+01 |
| CO2 | 4.40E+01 | SO3 | 8.01E+01 |
| Co2O3 | 1.66E+02 | SO4-2 | 9.61E+01 |
| CO3-2 | 6.00E+01 | Sr+2 | 8.76E+01 |
| Cr(OH)4- | 1.20E+02 | SrO | 1.04E+02 |
| Cr(TOTAL) | 5.20E+01 | Ta+5 | 1.81E+02 |
| Cr2O3 | 1.52E+02 | Ta2O5 | 4.42E+02 |
| Cs+ | 1.37E+02 | Tc+7 | 9.90E+01 |
| Cs2O | 2.90E+02 | Tc2O7 | 3.10E+02 |
| Cu+2 | 6.35E+01 | Te+6 | 1.28E+02 |
| CuO | 7.95E+01 | TeO2 | 1.60E+02 |
| Dy2O3 | 3.73E+02 | Th+4 | 2.32E+02 |
| Eu2O3 | 3.56E+02 | ThO2 | 2.64E+02 |
| F- | 1.90E+01 | Ti+4 | 4.79E+01 |
| Fe+3 | 5.58E+01 | TiO2 | 7.99E+01 |
| Fe2O3 | 1.60E+02 | Tl+3 | 2.04E+02 |
| H+ | 1.01E+00 | Tl2O3 | 4.57E+02 |
| H2O | 1.80E+01 | TOC | 1.20E+01 |
| H2O2 | 3.40E+01 | U(TOTAL) | 2.38E+02 |
| HCl | 3.65E+01 | U3O8 | 8.42E+02 |
| HF | 2.00E+01 | V+5 | 5.09E+01 |
| Hg+2 | 2.01E+02 | V2O5 | 1.82E+02 |
| HgO | 2.17E+02 | W+6 | 1.84E+02 |
| K+ | 3.91E+01 | WO3 | 2.32E+02 |

**Table 2-2 Non-Radioactive Component List**

| Non-Rad Component | MW | Non-Rad Component | MW |
|---|---|---|---|
| K2O | 9.42E+01 | Y+3 | 9.00E+01 |
| La+3 | 1.39E+02 | Y2O3 | 2.28E+02 |
| La2O3 | 3.26E+02 | Zn+2 | 6.54E+01 |
| Li+ | 6.94E+00 | ZnO | 8.14E+01 |
| Li2O | 2.99E+01 | Zr+4 | 9.12E+01 |
| Mg+2 | 2.43E+01 | ZrO2 | 1.23E+02 |
| MgO | 4.03E+01 | | |

### 2.1.4 Equipment Class

Each piece of the HTWOS equipment is represented by an object in the model. Each object is an instance of an equipment class that is created according to the equipment's characteristics (attributes) and functionality (methods). Various numbers of components lists are assigned as attributes to these classes for material balance calculations. The equipment classes used in the HTWOS G2 Model are given in Table 2-3.

**Table 2-3 HTWOS Equipment Class**

| HTWOS Equipment Class | |
|---|---|
| 1-data-logging-sensor | liquid-gas-chem-add |
| accumulation-scrubber | liquid-scrubber |
| accumulation-scrubber-uniform-split | mixer |
| centrifuge | mixer-6-outputs |
| chem.-add | mixer-oxide-glass-formers |
| evaporator-condenser-tank | phase-shifter |
| evaporator-wvp | p-split-2-all-phases |
| feed-hopper | sbs-condensate-receiver |
| flow-router | sbs-scrubber |
| f-split-3 | solid-gas-seperator |
| general-dst-tank | split-evaporator |
| glass-melter | stack |
| ix-column | white-flow-pipe |
| Analyzer | XX-Tank (XX=Tank Farm Designation, e.g. AP, AW, etc..) |

### 2.1.5 HTWOS Modules

The elements of the model are arranged in a hierarchical relationship that controls the way information is shared. The hierarchy allows an easy sharing of information simplifying the programming needed to accomplish complex tasks. When a modeler modifies the model to run a case, they modify objects in the model to implement parametric assumptions, modify logic blocks to change which procedures act upon which tanks to implement assumptions, or modify.

Within the KB hierarchy, the highest level workspaces are designated as modules. Each module contains collections of workspaces and subworkspaces grouped by common function or physical system. A module is a grouping of G2 code to perform one of the following:

- Describe a process, a facility, or specific equipment.
- Perform a specific task (for example, storing and reporting data, controlling event, and controlling simulation timing.
- Define a particular part of the mission.

Table 2-4 is a list of the 22 modules which comprise HTWOS.

**Table 2-4 Knowledge Base Modules**

| HTWOS Workspace | Simulation Purpose |
|---|---|
| bnfl-flowsheet-module.kb | WTP flowsheet |
| bom-logic-module.kb | Balance of mission tank farm logic |
| changes-module.kb | Temporary working area used to transfer large amounts of knowledge between modules |
| etf-flowsheet-module.kb | Effluent Treatment Plant flowsheet |
| gka-wtp-common-module.kb | WTP instructions & procedures |
| hlw-staging-logic-module.kb | WTP feed-staging logic for HLW |
| Htwos | Top level module for the reference release of HTWOS |
| htwos-common-module.kb | Workspace for common procedures, object definitions, etc used in all modules |
| initial-assumptions-module.kb | Initial assumptions and conditions that affect all operational modes (starting date, glass |
| initial-inventory-module.kb | Initial waste inventory in East and West tank farm areas |
| law-staging-logic-module.kb | WTP feed-staging logic for LAW |
| **menu-definitions-module.kb** | Defines all menu systems |

| Table 2-4 Knowledge Base Modules | |
|---|---|
| **HTWOS Workspace** | **Simulation Purpose** |
| owvp-logic-module.kb | Operational waste volume projection logic definition |
| piping-module.kb | Tank routing procedures & logic and object definitions for waste transfer |
| tank-farms-a-module.kb | Modeler A input module |
| tank-farms-b-module.kb | Modeler B input module |
| tank-farms-c-module.kb | Modeler C input module |
| tank-farms-common-module.kb | Common procedures, object-definitions etc that only relate to the tank farms |
| tank-farms-rsw-module.kb | Modeler D input module |
| tank-inventory-module.kb | Initial inventory of all tanks of HTWOS |
| v-and-v-module.kb | Common procedures used for validation/verification steps and glass properties model |
| wtp-common-module.kb | Common procedures, object-definitions etc that only related to the detailed WTP flowsheet |

### 2.1.6 HTWOS Procedures

HTWOS procedures are located within each object, logic block, module and or workspace. A procedure begins with a statement of its title and function. Next, the variables used within the program are listed and the operating logic or control logic of the procedure is given. The operating/control logic could include:

- other procedures being called,
- "if-then" statements,
- pumping orders, and
- data reporting functions.

Various treatment processes and facilities are modeled in sufficient detail:

- to provide a reasonably accurate predication of process operation,
- to predict the interaction of recycle between unit operations within a treatment process or facility, and
- to predict the quantities of primary waste products and compositions of secondary waste streams

The model provides results that can be analyzed and presented using various software tools including MathCAD®, Microsoft Excel®, and Microsoft Visio®. Results are generally sent to several Excel templates using the HTWOS to Excel Interface (HTWOS2XL). The HTWOS2XL is a VB.NET application written to transfer data from the HTWOS model into verified Microsoft Excel spreadsheets (templates) as part of writing results from a model run. The application was developed using Microsoft Visual Studio 2005, the Microsoft Office 2003 Primary Interop Assemblies, and ActiveX controls on the G2[1] software platform.

### 2.1.7 HTWOS Physical Properties

TBD Add discussion of HTWOS physical properties used.

[1] G2 is a trademark of Gensym Corporation

## 2.2 COMMON OPERATING RULES

There are common operating rules/programming conventions that are used repeatedly throughout the model. This section documents these common operating rules used in HTWOS.

### 2.2.1 Basic Model Rules

Components in kg-moles are tracked in the model using component arrays. Each unit operation has its own component arrays which contain the components in the given unit operation.

Feed list and output lists are used for the determination of batch transfers. When an upstream unit is ready to transfer material out, the unit is placed on its out-put list. When a downstream unit is ready to receive material, it is placed on the feed list. The upstream analyzer logic procedure scans for the status of both lists and triggers the upstream unit pump procedure for pumping when conditions are met.

When the unit transfers material, it transfers a fraction of kg-moles from the component arrays based on the transfer volume. The fraction is constrained by the pump rate of the upstream unit, the remaining volume of the upstream unit that can be pumped, and the remaining space of the downstream unit that can be filled.

### 2.2.2 Batch Transfers

The batch transfer process is the most common used vessel operation. When the upstream vessel is full or reaches its set point, the upstream vessel is placed on its output-list. When the downstream vessel is empty or reaches its minimum volume, the vessel is placed on its input-list. The upstream vessel confirms that both vessels are ready. If there are no other conditions or control logic preventing the transfer the contents of the upstream vessel are transferred to the downstream vessel. Each time step, the vessels and component arrays are updated. The transfer is terminated when the upstream vessel reaches its minimum volume or the downstream vessel reaches its set point or maximum volume.

### 2.2.3 Continuous Transfers

The continuous transfer process is used primarily in the melters, offgas systems, and the evaporators. When a continuous transfer occurs, material enters into the unit operation, reactions and/or splits are performed, and all of the remaining material exits the unit operation in one single time step. A split factor and split destination is established for each relevant modeling object (Appendix A). Switches within HTWOS allow the direction of the split to be reversed.

Some continuous transfer unit operations can be described as partial continuous transfer unit operations. This is because they accumulate some of the material that continuously passes through and eventually empty the gathered material in a batch transfer. The evaporators, condensers, offgas treatment scrubbers, and silver-mordenite column are examples of partial continuous transfers.

### 2.2.4 Splits

Splits are used in the model to demonstrate the entrainment of components in certain processes and the separation of components in other processes. Splits are performed in the evaporators, condensers, melters, and off-gas systems using either percent or fractions. The splits are component based and are applied to the component array of the unit operation. The fraction or

percent of that particular component is subtracted from the component array of the unit operation performing the splits and added to the component array designated by the split table. The remaining material in the unit operation performing the split exits out of the other exit stream.

If the unit operation is an accumulator, the material that is removed using the split is not transferred to another unit operation. Rather, it is added to an accumulating array where captured material is stored.

The splits in the HTWOS model are listed in Appendix A.

### 2.2.5 Chemical Additions

All chemical addition are done through chem.-add objects. A chem.-add is dedicated to a unit operation and delivers a specific solution of chemicals with a preset concentration. The amount of chemical solution needed is either pre-defined or calculated to achieve the desired concentration.

### 2.2.6 Chemical Reactions

Certain unit operations or vessels perform chemical reactions. The chemical reactions are described within the applicable systems model description. The chemical reaction is made up of reactants and products and is based on simple stoichiometric reaction balance. A reaction conversion is given for the reaction and is applied to the reactant. The reaction subtracts the reactants used from the component array and adds the products generated to the component array. If the reactions involve phase changes, reactants and products are moved to the corresponding liquid/solid/gas/oxide positions in the array. A reaction definition core function is described in section 2.3 below.

### 2.2.7 Total Blend/No Blend Calculation

The total blend/no-blend calculations are controlled by a user interface that defines a blend/no blend case to be calculated. The new user interface is shown by going to the “Tools” menu choice at the top of the screen and selection the menu choice “Show blend/no blend/glass matrix calcs”.

## 2.3 HTWOS CORE FUNCTIONS

Nine core functions were identified through professional judgment as being essential to the HTWOS model functionality:

- Liquid Specific Gravity
- Reaction Definitions
- Mass Balance
- Concentrator Procedure
- Pump Procedure
- Glass Formulation
- Radionuclide Decay

- Traceback Function
- Wet Solids Calculation

These core functions were previously verified in 2004 and documented in RPP-18592, *Hanford Tank Waste Operations Simulator Software Verification and Validation Plan and Results*. Four of these core functions; Liquid Specific Gravity, Reaction Definitions, Traceback Function, and Wet Solids Calculation were more recently V&Vd in RPP-RPT-39908. Each of these core functions are described below.

### 2.3.1 Liquid Specific Gravity

HTWOS moves mass through the tank farm system; liquid volume and specific gravity (SpG) are calculated values based on the liquid mass in the tank. The liquid specific gravity algorithm used in HTWOS is based on a calculation method documented in RPP-14767, *Hanford Tank Waste Ops. Specific gravity Model Derivation of Coefficients and Validation*.

### 2.3.2 Reaction Definitions

The general reactions in G2 are discussed in 2.2.6 specific details of the HTWOS reaction definitions are discussed here. The HTWOS model simulates chemical reactions that will occur in the waste transfer system. Reactions within HTWOS are stoichiometric with an assumed extent of reaction defining the reaction completion. Reaction kinetics are not modeled. HTWOS defines a reaction using special objects called reaction-definitions. A reaction-definition contains all the attributes to completely define the stoichiometry of a single chemical reaction. To minimize errors defining the attributes of each reaction-definition, standard procedures are used to load the desired reaction into a reaction-definition object. Chemical reactions are modeled by calling a standard procedure, RSTOIC, which performs the reaction defined by the reaction-definition provided to it. Multiple reactions are modeled by calling RSTOIC for each reaction-definition inside a separate calling procedure. RSTOIC calculates the desired reaction until one of two outcomes takes place. If enough reactants are present to satisfy the reaction-definition, the reaction is completed to the assumed extent of reaction. If any of the reactants are completely consumed before the extent of reaction is reached, the reaction stops based upon the limiting reactant. The chemical reactions for a given unit operation are performed in the order they are listed in the calling procedure.

### 2.3.3 Mass Balance

The HTWOS model performs discrete-time material-balance calculations based on prescribed initial conditions, boundary conditions, and operating logic. The dynamic material balance is achieved by tracking the storage, pumping, separation, reaction, and phase change of chemical components in every unit operation and within each time increment. For the purposes of achieving a process-wide mass balance, it is assumed that no mass can be created nor destroyed.

The initial conditions include a feed vector that represents the waste compositions and delivery sequence of the Tank Farm waste batches, and volumes and concentrations of solutions in process equipment before startup. Thereafter, each unit operation is event-driven as the status of that unit operation changes over time. An analyzer logic procedure controls the actions of each unit operation using pump procedures, reaction procedures, sample procedures, or other action procedures, as appropriate, depending on the current status of that unit operation.

Selection of an appropriate time step for synchronizing operations is compromised by having to be small enough to preserve the resolution of plant operations and yet large enough to avoid unacceptably long model run execution times. HTWOS capabilities provide for variation of the time-step interval during different process stages to accommodate the resolution/run-time issue (e.g., the time step in the model is 12 .minutes for WTP operations and 120 minutes for waste transfer). The simulation clock is used to synchronize the actions of all the processes (e.g., every simulation clock tick represents 1/5 of an hour simulation time when applying the 12 minute time-step).

HTWOS includes an object class called "mass-balance" which is used to calculate mass balances around arbitrary unit operations or a set of unit operations. An internal mass-balance object may be defined around a unit operation containing reactions. It will calculate a mass balance around the defined streams as the model runs. This output will be used to verify the correct reaction operation.

### 2.3.4 Concentrator Procedure

The HTWOS model simulates the operation of the 242-A Evaporator and all other evaporators/dryers which remove water from feed, with a single procedure called the concentrator procedure. This procedure uses three input parameters, the feed rate, the maximum condensate offgas rate, and the concentrated bottoms specific gravity (or overall volume reduction factor) to calculate a mass balance that satisfies these parameters.

The concentrator logic simulates the following steps:

- collect dilute waste
- allow 3 months for sampling and analysis
- evaporate waste to 1.43 SpG
- automatic check to confirm radionuclide concentration limits are not exceeded

If a mass balance cannot be reached without exceeding the maximum condensed offgas rate, the input feed rate is reduced until the condensed offgas rate has not been exceeded. The concentrator procedure does not model the solid/liquid equilibrium or detailed partitioning to the condensate stream.

### 2.3.5 Pump Procedure

The HTWOS uses six pump procedures to simulate the movement of material through the tank farm system. The HTWOS model simulates a pumping operation between two tanks by calling a pump procedure that moves material from the source tank into the destination tank at a defined pump rate.

The pumping operation will continue at the defined rate until:

- the source tank has been pumped to its minimum volume,
- the destination tank volume has reached its maximum volume, or
- a defined volume of material has been pumped from the source tank.

Each pump procedure within HTWOS provides this basic functionality. When additional pump procedure functionality is required, the basic pump procedure is cloned and the additional functionality programmed into the cloned pump procedure.

### 2.3.6 Glass Formulation

The HLW and LAW glass formulation functions are described below.

#### 2.3.6.1 HLW Glass Formulation

The HTWOS model determines the glass formulation for a set of HLW feed oxides by minimizing the total mass of the added glass formers while producing an acceptable glass. In this context, an acceptable glass is one that is projected to meet specified glass property constraints and satisfies simple solubility and model domain constraints. The model domain constraints are intended to keep the glass formulation within a region of known acceptable glasses and to keep the glass properties models within regions of their applicability. The glass properties constraints insure that a glass has the physical properties required for processing and for high durability as a final waste form. The simple solubility constraints are used to insure acceptable glasses when the glass property models do not adequately constraint some components.

Mathematically, the HLW glass formulation model is a constrained non-linear programming (NLP) problem. The technique that the HTWOS model uses to solve the NLP problem is to iterate over a linearized version of the problem. This approach is described in more detail in RPP-18592, along with the basis for each of the constraints.

The specific HLW glass formulation model used by HTWOS has been historically called the "Glass Properties Model", or GPM for short. There are two variants of that model, depending upon the limits used for certain constraints, that are called the "Relaxed GPM" and the "Default GPM". The "Relaxed GPM" incorporates potential improvements in the HLW waste oxide loading by relaxing the glass viscosity, Cr2O3 solubility, and the spinel liquidus temperature constraints. The "Default GPM" is a more conservative model that had been used for HLW glass projections up until 2002. In either case, the melter is assumed to operate at a nominal temperature of 1150 °C. The "Relaxed GPM" is the current baseline model for system planning purposes.

The glass property constraints are shown in Table 2-5. Additional constraints (Table 2-6) were also applied to either limit the glass composition to the approximate region of validity (domain) of the various property models, or to limit the allowable concentration of components that impact the waste oxide loading in the resulting glass. The limits in these tables should not be confused with those in Table TS-1.1 of the WTP contract (DE-AC27-01RV14136), which establishes minimum component limits in HLW glass for contractual purposes.

| **Table 2-5 Glass Property Constraints** | | |
|---|---|---|
| **Property** | **Lower Limit** | **Upper Limit** |
| Liquidus Temperature (Spinel) | 850 °C | 1100 °C (relaxed)<br>1050 °C (default) |
| Liquidus Temperature (Zircon) | None | 1050 °C |
| Melt Viscosity at 1150 °C | 4.5 Pa·s | 10 Pa·s (relaxed)<br>5.5 Pa·s (default) |
| PCT (B, Li, Na) | None | 2 $g/m^2$ |
| Nepheline precipitation rule $\frac{[SiO_2]}{[SiO_2]+[Al_2O_3]+[Na_2O]}$ | 0.62 | None |

**Table 2-6 Glass Composition Constraints.**

| | **Component** | **Minimum (wt %)** | **Maximum (wt %)** | **Allowed as glass forming chemicals?**[2] |
|---|---|---|---|---|
| Model Domain | $SiO_2$ | 38.0 | 57.0 | Yes |
| | $B_2O_3$ | 5.0 | 20.0 | Yes |
| | $Na_2O$ | 5.0 | 20.0 | Yes |
| | $Li_2O$ | 1.0 | 4.0 | Yes |
| | $Al_2O_3$ | None | 17.0 | Yes |
| | $Fe_2O_3$ | 2.0 | 15.0 | Yes |

[2] For modeling purposes, the glass forming chemicals are assumed to be pure oxides rather than minerals with impurities.

**Table 2-6 Glass Composition Constraints.**

| | Component | Minimum (wt %) | Maximum (wt %) | Allowed as glass forming chemicals?[2] |
|---|---|---|---|---|
| | CaO | None | 10.0 | No |
| | MgO | None | 8.0 | No |
| | $ZrO_2$ | None | 15.0 | No |
| Solubility | $Cr_2O_3$ | None | 0.5 (default)<br>1.0 (relaxed) | No |
| Solubility | $P_2O_5$ | None | 3.0 | No |
| Solubility | $SO_3$ | None | 0.5 | No |
| Solubility | $Rh_2O_3 + Ru_2O_3$ | None | 0.25 | No |

### 2.3.7 Radionuclide Decay

The radionuclide components are decayed on a yearly basis for every composition array in the HTWOS model. The procedure "decay-this-component-delta-years" is called to decay each radionuclide with respect to its half-life. Also, the decay calculation forces Ba-137m and Y-90 into equilibrium with Cs-137 and Sr-90 respectively, regardless of the initial values of Ba-137m and Y-90.

The ingrowth of decay products that do not significantly contribute to total activity is not calculated. Radioactive decay products are handled consistently as a second order decay of the parent nuclide. Values for the half-lives used in HTWOS are from Half-lives – Chart of the Nuclides, 16th edition, documented with any adjustments in the EZDK spreadsheet[3] –SVF-1259, Rev. 0, *EZDK_generic_FY 2007.xls*.

Products in the form of immobilized low-activity waste (ILAW) and immobilized high-level waste (IHLW) show the radionuclide content at the time of glass production (i.e., the reaction to form an oxide). Products are not decayed except for those special cases noted below in the discussion.

### 2.3.8 Traceback Function

The purpose of the HTWOS traceback function is to identify the origin of waste from any SST or DST during a simulation. The information traced is an array of the liquid and solid mass (kg) contributions from each of the 177 waste tanks. The starting conditions are the total washed solids mass and non-water liquid mass for each starting tank. The masses are updated during every transfer between tanks by the procedure 'start-pump' and by transfer between settled layers by the procedures 'mix_solid_layers', 'mix_top_solid_layer', 'make-next-solid-layer ' and 'mix_part_top_solid_layer. The updated traceback masses $M'_{t1}$ and $M'_{t2}$ for the sending array and receiving array respectively are calculated for each mass transfer according to

$$M'_{t2} = M_{t2} + M_{t1} M_p / M_1 \tag{1}$$

$$\text{and} \quad M'_{t1} = M_{t1} - M_{t1} M_p / M_1 , \tag{2}$$

where $M_1$ is the current total (solid or non-water liquid) mass in the sending array, $M_p$ is the mass transferred, and $M_{t1}$ and $M_{t2}$ are the current sending array and receiving array traceback masses. The index "t" refers to one of the 177 tanks that contribute some fraction of its original mass across all other tanks present in a simulation. A separate array of traceback masses are

[3] The BBI team is responsible for maintaining reference values for molecular weight, half-life, and specific activity. The EZDK spreadsheet (SVF_1259, Rev. 0) is a source file used by the HTWOS modeling team. All of the molecular weight and half-life data are from the 16th Edition of the Chart of the Nuclides with the exception of three half-life values; $^{69}$Ni due to an uncertainty with regard to the reported half-life value. $^{242}$Cm to compensate for a lack of information about the parent isotope ($^{242m}$Am ), and $^{227}$Ac because the value in the 16th Edition of the Chart of the Nuclides was so close to the value in the 15th Edition that a change was not considered necessary. The half-life of $^{242}$Cm (~163 days) is short compared to the half-life of the parent isotope (~141 years) and $^{242m}$Am is not tracked in the BBI so the longer of the two half-life values is used for $^{242}$Cm to approximate the secular equilibrium of $^{242}$Cm with $^{242m}$Am.

tracked for both the solid and non-water liquid phase. Therefore, separate applications of equations (1) and (2) are made for both the solid and non-water liquid masses involved in a transfer. Conservation of the traceback mass is built in to equations (1) and (2). Additionally, it is assumed that the traceback mass phases are set after any initial dissolution and do not change for the remainder of the simulation. This is considered to be a reasonable approximation for *identifying* the sources of wastes contributing to a given tank.

If a more accurate *quantification* of the traceback mass is required, it will be necessary to track phase changes during a run. For the application of flowsheet reporting, only the *identification* of contributing tanks is required to determine which transfers should be reported for specific tank retrieval and/or staging flowsheet. The traceback masses also serve as a guide for trouble shooting waste composition problems when a specific tank can be identified as the source.

Wash and Leach factors are treated as a property of the waste and follow the waste during transfers. When two or more layers of waste are combined by mixing or transfer, the resulting wash and leach factors are the mass weighted average, by component, of the individual layers. For the combination of two layers the resulting property is calculated by the following

$$P_i = (P_{i1}M_{i1} + P_{i2}M_{i2}) / (M_{i1} + M_{i2}) \quad (3)$$

Where $P_i$ is the resulting property value for a component, $P_{i1}$ and $P_{i2}$ are the property values of the individual layers and $M_{i1}$ and $M_{i2}$ are the component masses for the component.

### 2.3.9 Wet Solids Calculations

The HTWOS model calculates tank solids volume using two methods that can be user selected for each tank. The first method is based upon a dry solids model, the second method is based upon a wet solids model. The dry solids model calculates solids volume assuming a constant solids density of 3 gm/cc for all solids. During a pumping operation between two tanks, the unsettled solids volume is simply the volume of dry solids in the tank based upon a constant 3 gm/cc density. After a pumping operation is complete, the pumped solids in the destination tank are settled as a distinct layer on top of any existing solids. This solids layer consists of the volume of dry solids calculated based upon a constant 3 gm/cc density and an interstitial liquid mass calculated assuming a constant solids weight fraction (current HTWOS value is 0.4). The total settled solids volume is then the addition of the dry solids volume and the interstitial liquid volume associated with the settled solids layer. This method of solids volume calculation can over or under predict the pumped solids volume for certain tanks. Because of this situation, a second method of calculating solids volume was developed based upon a wet solids volume.

The wet solids volume method assumes that the wet solids volume is the volume associated with the solids mass plus the volume associated with the interstitial liquid of the solids mass. An initial wet solids volume is set for the source tank. As the source tank is pumped into a destination tank, a wet solids volume pumped is added to the current wet solids volume of the

destination tank. At the completion of the tank transfer, the pumped solids in the destination are settled into a distinct layer above existing solid layers, but the volume of the layer is based upon the wet solids volume that was pumped into the downstream tank. The volume of dry solids is still calculated based upon the assumption of 3 gm/cc solids density, but the amount of interstitial liquid associated with this solids layer is the difference between the dry solids volume and the wet solids volume of the tank; the total solids volume for the settled solids layer becomes the new wet solids volume for that tank.

## 2.4 HTWOS TO EXCEL® INTERFACE

HTWOS produces a variety of outputs that are used to optimize the baseline operating strategy for moving tank waste through the SST and DST systems and for conducting waste treatment activities. This data is useful to:

- mission-level planning,
- prepare waste retrieval and treatment flowsheets,
- predict when mass movements in the system will occur,
- form the basis for project schedules,
- provide a technical basis for program planning.
- screen waste compatibility requirements in support of waste retrieval and transfer planning.
- evaluate the sensitivity of changes in assumptions to the resulting River Protection Project (RPP) Mission Plan.

The HTWOS to Excel Interface (HTWOS2XL) is a VB.NET application written to transfer data from the HTWOS model into verified Microsoft Excel spreadsheets (templates) as part of writing results from a model run. The HTWOS2XL application was developed using Microsoft Visual Studio 2005, the Microsoft Office 2003 Primary Interop Assemblies, and ActiveX controls on the G2 software platform. The user opens an HTWOS model session before launching the HTWOS2XL Interface. When launched, HTWOS2XL initiates a connection with the open HTWOS session and requests data from specific HTWOS objects. The requested data are transferred into verified spreadsheet files, and the new files containing data are saved along with other results from the model run.

Version 1.4 of HTWOS2XL creates 12 *csv* templates that summarize an HTWOS model run. As necessary, additional standardized output templates may be created to meet user needs. A list of verified templates is provided below:

- Transfer File
- Production Plots
- SST Retrieval
- DST Space
- Residual Waste

- Traceback Matrix
- Spec 7 Assessment
- Spec 8 Assessment
- HGR Feed Assessment
- HLW Glass Output
- Summary Balances
- Transfer Plots

The data in the verified templates are used to predict:

- The Double-Shell Tank (DST) waste levels over time [DST Plot files],
- The DST space availability [DST Plot files],
- Single-Shell Tank (SST) retrieval sequencing [SST Retrieval Data file],
- The quantity of immobilized low activity radioactive waste (LAW) and high-level radioactive waste (HLW) products produced by the Waste Treatment and Immobilization Plant (WTP) and by supplemental treatment process [Product Plot; Summary Mass Balance File-Key Results files],
- Time dependencies for Hanford Site waste composition [HLW Glass File],
- Immobilized LAW (ILAW) and immobilized HLW (IHLW) production schedules [Product Plot files],
- Tank waste residuals [Residual Inventory file],
- Secondary wastes generated by various operations [Summary Mass Balance file], and
- Waste composition in source and receiver tanks [HTWOS internal data],
- A record of waste stream characteristics during transfers [HTWOS internal data],
- Spec 7 compliance [Spec 7 Assessment]
- Spec 8 compliance [Spec 8 Assessment]
- Hydrogen Gas Retention screening (HGR) [HGR Feed Assessment],
- Traceback Matrix,
- Waste Transfer History [filterable table of projected transfers],
- Transfer Plots [analysis of 242-A evaporator campaigns; number of DST to DST transfers; cumulative transfer volume].

## 2.5 INITIATING AN HTWOS MODEL RUN

### 2.5.1 Model Inventory Input Preparation

This process is described in detail in TFC-ENG-CHEM-D-38, *HTWOS Model Inventory Input Preparation*.

### 2.5.2 The Best-Basis Inventory

The inventory input to HTWOS is revised on approximately an annual basis, but no more than quarterly to avoid creating inventory related differences obscuring the comparison of retrieval or processing scenarios.

The Best-Basis Inventory (BBI) program provides a composition of the chemicals and radionuclides stored in the 177 underground storage tanks. In addition to the normal BBI updates based on new analytical data, the BBI is updated quarterly to account for waste transactions (e.g., evaporator operations and tank-to-tank transfers). BBI inventories are downloaded into verified Excel spreadsheets to prepare the data for input to the HTWOS model.

The HTWOS model uses the BBI in conjunction with the historical waste transfers and newly generated waste projection. It is adjusted to take into account radioactive decay.

### 2.5.3 Historical Waste Transfers

HTWOS modeling accounts for waste transfers that have occurred since the last BBI update.

### 2.5.4 Newly Generated Waste Projections

The estimated facility-generated waste volumes are obtained by contacting appropriate personnel at the various facilities or from interface control documents describing the interface between the various facilities and the tank farms. The compositions are based on RPP-8554, *Single-Shell Tank Retrieval Sequence and Double-Shell Tank Space Evaluation.* Waste generation assumptions are updated at the time of a BBI update for each facility or project that will either contribute waste to the DST inventory or impact tank farm operations (including waste transfers).

Newly generated waste assumptions are discussed in 4.3.12 and 4.3.13.

### 2.5.5 Wash/Leach Factors

Wash and leach factors from are downloaded from TWINS data base to be used within the model.

### 2.5.6 Volume Reconciliation

TBD

## 2.6 GENERAL HTWOS MODEL OR DATA ANALYSIS ASSUMPTIONS

### 2.6.1 Initial Waste Inventory

Starting tank inventories represents the contents of the tanks as of 1/1/2007 (documented in RPP-33715).

***Basis*:** This is identified as the "FY 2007" inventory and is based on BBI data downloaded from TWINS in May 2007. Adjustments were made in the HTWOS model for historical transfers through 4/1/2007. The tank inventory used for Version 3.0 is the BBI data from TWINS in May 2007 except for tank C-108, which tank has an effective date of 1/2/2007; the tank C-108 inventory is based on a volume measurement taken on January 2, 2007.

### 2.6.2 Waste Compositions Estimations

Wastes are homogenized when mixed.

***Basis:*** The waste in the tanks may not be homogeneous and the waste from DSTs may be retrieved in layers; as supernatant liquid, mobilized sludge, or as a mobilized salt layer. Variations in stream composition from initial retrieval to final tank retrieval are expected.

***Issue 1:*** Large variations in stream composition during tank retrieval may adversely affect transfer operations.

### 2.6.3 Water Content of Initial Inventory

The water content of initial inventory is determined by calculating a stream density and two total stream masses (including water and excluding water), and then obtaining water content by difference.

***Basis:*** See HNF-SD-WM-SP-012, A6.2 for a discussion of the methodology for calculating the water content in the initial inventory.

### 2.6.4 Volume of In-Process Streams

Volumes of waste streams are calculated from mass using density correlations for liquids and a fixed particulate density of 3 g/mL for solid.

***Basis:*** See HNF-SD-WM-SP-012, A6.3 for a discussion of the method used for calculating the volume in process streams.

### 2.6.5 Transuranic Content Accounting

TRU quantities for LAW and ILAW are based on Specification 2 and 7 definitions.

***Basis:*** The selection of the isotopes for determining the TRU content of the LAW feed is based on criteria provided in Specification 7 of the BNI Contract. Specification 7 defines TRU as alpha-emitting isotopes with an atomic number greater than 92 and half-lives greater than 20 years.

***Issue:*** Specification 2 of the BNI Contract defines TRU for the immobilized low-activity waste (ILAW) form as alpha-emitting isotopes with an atomic number greater than 92 and half-lives greater than 5 years based on 10 Code of Federal Regulations (CFR) 61.55. Currently HTWOS does not calculate the TRU content of the ILAW. If this calculation is added in the future, two TRU lists will need to be carried within the HTWOS.

### 2.6.6 Radionuclide Decay

The BBI reference decay date of 1/1/2004 is used as the reference decay date in the model. Radionuclides are decayed to January 1 of the year of delivery for feed specification compliance

assessment. Half-life values for decay calculations are taken from the Chart of Nuclides, 16th Edition.

***Basis:*** Table 2-1 lists the radioactive components in HTWOS and their half-life's and specific activities. The radionuclide components are decayed on a yearly basis for every composition array in the HTWOS model. The procedure "decay-this-component-delta-years" is called to decay each radionuclide with respect to its half-life. Also, the decay calculation forces Ba-137m and Y-90 into equilibrium with Cs-137 and Sr-90 respectively, regardless of the initial values of Ba-137m and Y-90.

The ingrowth of decay products that do not significantly contribute to total activity is not calculated. Radioactive decay products are handled consistently as a second order decay of the parent nuclide. Values for the half-lives used in HTWOS are from Half-lives – Chart of the Nuclides, 16$^{th}$ edition, documented with any adjustments in the EZDK spreadsheet[4] –SVF-1259, Rev. 0, *EZDK_generic_FY 2007.xls*. See section 2.3.7 for a discussion of the radioactive decay core function.

### 2.6.7 Waste Chemistry and Mass Balances

- Dissolution of solids is predicted by the application of water-wash factors downloaded from the TWINS on 3/7/2007 and by use of the Sr solubility model documented in RPP-21807.
- Chemical charges are balanced when washing solids by the adjustment of bound OH- and then by adjustment of CO32-.
- TOC (less oxalate) shall be treated as C.
- HTWOS does not account for solids formation.

***Basis:*** See HNF-SD-WM-SP-012, A6.6 for a discussion of the waste chemistry and mass balance.

### 2.6.8 ILAW Package Production

ILAW package production rates are based on the glass production rates, glass density, and package fill assumptions.

***Basis:*** This is a general assumption used to calculate package production based on basic engineering principles.

---

[4] The BBI team is responsible for maintaining reference values for molecular weight, half-life, and specific activity. The EZDK spreadsheet (SVF_1259, Rev. 0) is a source file used by the HTWOS modeling team. All of the molecular weight and half-life data are from the 16$^{th}$ Edition of the Chart of the Nuclides with the exception of three half-life values; $^{69}$Ni due to an uncertainty with regard to the reported half-life value. $^{242}$Cm to compensate for a lack of information about the parent isotope ($^{242m}$Am ), and $^{227}$Ac because the value in the 16$^{th}$ Edition of the Chart of the Nuclides was so close to the value in the 15$^{th}$ Edition that a change was not considered necessary. The half-life of $^{242}$Cm (~163 days) is short compared to the half-life of the parent isotope (~141 years) and $^{242m}$Am is not tracked in the BBI so the longer of the two half-life values is used for $^{242}$Cm to approximate the secular equilibrium of $^{242}$Cm with $^{242m}$Am.

### 2.6.9 IHLW Canister Production

IHLW canister production rates are based on the glass production rates, glass density, and canister fill assumptions.

***Basis:*** This is a general assumption used to calculate canister production based on basic engineering principles.

### 2.6.10 Radionuclide Activity Associated with Product Oxides

To maintain the ability to track the individual radionuclides in the various glass products, the radionuclides in the melter feeds are NOT reacted to oxides.

***Basis:*** The ability to track explicitly the activity of radionuclides in an oxide compound would be lost if those radionuclides are reacted to form glass oxides in the HTWOS model, This assumption is acceptable since the mass associated with the “missing” oxygen in the would-be oxides is a small fraction of the total mass.

# 3.0 SINGLE SHELL TANK SYSTEM

This section describes the activities associated with single shell tanks (SST) storage and retrieval of tank waste for transfer to a double-shell tank (DST).

## 3.1 SST PROCESS DESCRIPTION

The Single Shell Tank (SST) system stores wastes until they are retrieved into the DST system,. The locations of the 149 SSTs are listed in Table 3-1.

**Table 3-1 Distribution of SSTs at the Hanford site.**

| Quadrant | Area | SST Farm |
|---|---|---|
| Southeast (SE) | 200E | A, AX, and C farms |
| Northeast (NE) | 200E | B, BX, and BY farms |
| Southwest (SW) | 200W | S, SX, and U farms |
| Northwest (NW) | 200W | T, TX, and TY farms |

The SSTs are grouped into 12 tank farms containing between 4 and 18 tanks each. Of the 149 SSTs, 133 are large-capacity tanks with a 75-ft internal diameter (100 series tanks) and 16 are smaller-capacity tanks (200-series tanks) with a 20-ft internal diameter.

The number and capacities of the SSTs are:

- 16 tanks, each of 55,000-gal capacity,
- 60 tanks, each of 530,000-gal capacity,
- 48 tanks, each of 758,000-gal capacity, and
- 25 tanks, each of 1,000,000-gal capacity.

The SST system has a total working volume of about 94 Mgal. The physical dimensions of the SST vessels are provided in Appendix-VESSEL.

Figure 3-1 provides an overview waste storage complex showing the principal existing and planned transfer systems.

Figure 3-1. Waste Transfer System.

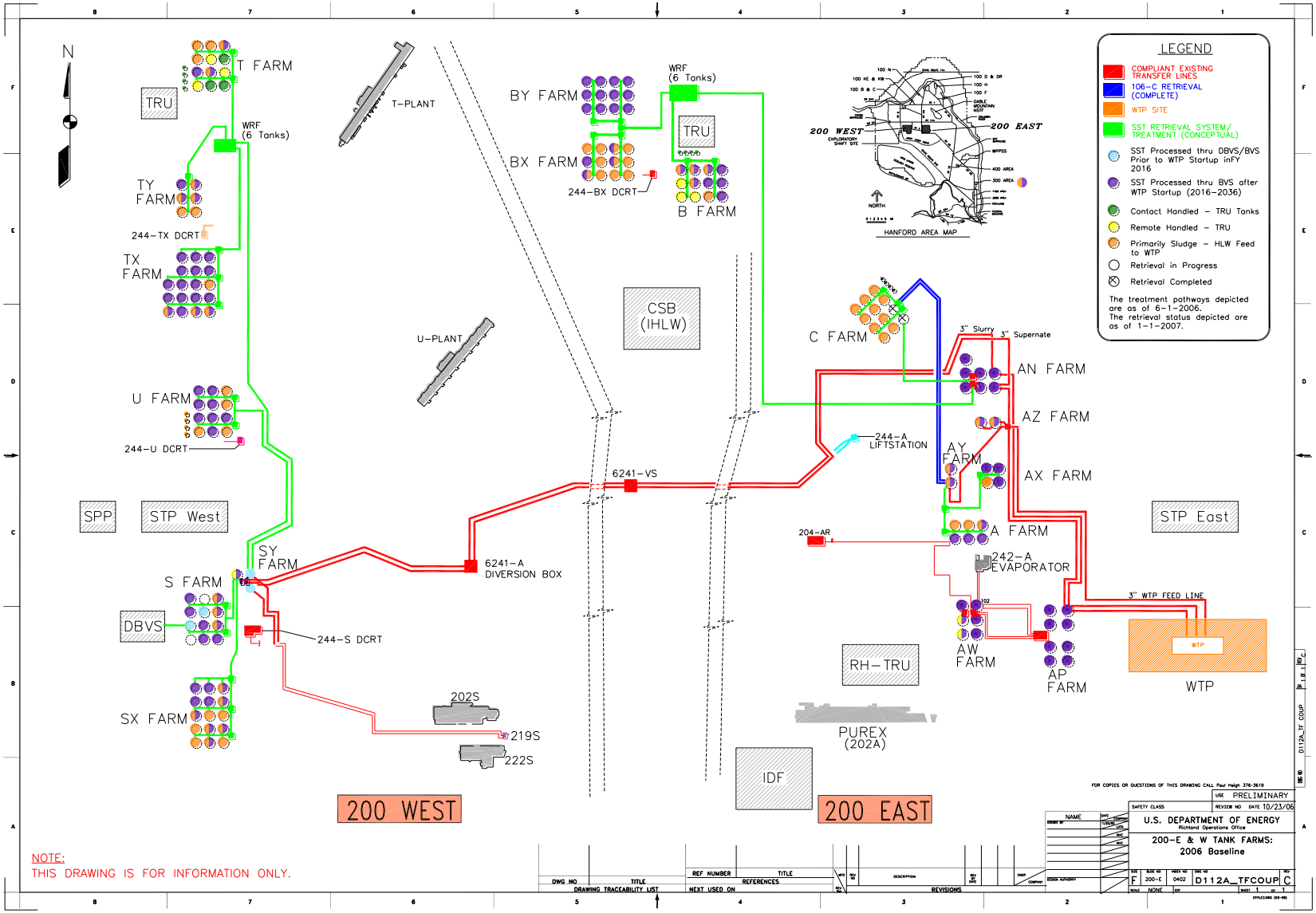

Retrieval of each SST requires a pathway or route to a DST, a waste retrieval facilities (WRF), or a processing facility. Existing transfer pipelines allow movement of waste between SSTs and from SST to DST storage. Two new WRF will be used to support retrieval from B and T complex. Compliant transfer lines will be constructed to support retrievals from B and T complex (one line for each complex) before the WRFs are made available.

Wastes are being retrieved from the SSTs by using modified sluicing, a mobile retrieval system, or a vacuum retrieval system. The choice of retrieval system depends on the nature of the waste retrieved, the condition of the SSTs (i.e., whether the SST is a sound tank, or to have leaked previously). Special retrieval systems may be developed to deal with specific waste retrieval issues (e.g., the removal of hard heels). No interim stabilization of single-shell tanks is modeled, interim stabilization (Saltwell liquid pumping) was completed in March 2004, and is not included in the discussion below nor is it included in the HTWOS model.

### 3.1.1 Modified Sluicing

The modified sluicing (MS) retrieval technology uses a liquid spray to dissolve, dislodge, and mobilize SST wastes for retrieval. The sluicing system typically consists of two sluicers, a slurry pump, and one or more cameras installed in the tank, and a control trailer located near the tank. Water is added to a SST to dissolve and mobilize the waste, or recycled supernate from a DST or a WRF may be used as the motive fluid.

The mobilized waste solutions and slurries will be pumped from the SST to a DST receiver, or to a WRF tank and then to a DST. The system is referred to as MS because of design improvements that improve or maintain waste retrieval efficiencies (compared to past retrieval efforts using sluicing) while reducing the amount of water or recycled liquid required to retrieve the waste

### 3.1.2 Mobile Retrieval System

The mobile retrieval system (MRS) is a vacuum-based waste retrieval system that consists of an articulated mast installed near the center of a tank along with an in-tank vehicle (ITV) designed to move waste toward the center of the tank where it can be removed with the mast. The articulating arm on the mast has a vacuum head that can be moved around the central region of the tank with an effective horizontal reach of approximately 16 ft.

Air or water can be injected at the vacuum head to assist in mobilizing the waste. If needed, a series of five scarifying, high-pressure, low-volume water jets located around the outside of the vacuum head can be used to dislodge the waste. Both the central mast and the ITV have the ability to use low-pressure water (approximately 125 psi) and high-pressure water (approximately 1,500 psi) to mobilize waste.

The waste is moved to a batch vessel located above grade in the vessel/pump skid where load cells and a level gauge indicate the waste batch volume. The batch vessel has a working volume of about 400 gal (HNF-SD-WM-SP-012, *Tank Farm Contractor Operation and Utilization Plan*, Rev. 6).

The ITV is an adaptation of a commercially available tracked vehicle. The ITV has the ability to push waste via a low-pressure water cannon to wash down tank walls and equipment and a three-nozzle scarifier system that can be used to dislodge and mobilize waste, if necessary. The ITV

may be deployed at any time during waste retrieval operations to push or jet waste to the center of the tank where it can be removed with the vacuum system. Water and hydraulic lines are routed to the ITV through an umbilical line.

During retrieval operations, the batch vessel is placed under a vacuum (created by the vacuum skid), which draws waste from the SST into the batch vessel. The waste is separated from the gas stream, which continues to the vacuum skid. When the batch vessel is full (~400 gal), the vacuum is broken and the waste is combined with supernate before transfer to the pump skid. A booster pump located on the pump skid draws waste from the batch tank through an ultrasonic de-agglomeration unit to reduce the particle size before transfer to the DST.

The MRS technology was developed to retrieve waste from those SSTs assumed to have leaked. As such, the volume of liquid added to the SST at any point in time is kept to a minimum. Additionally, water is used as a motive fluid rather than recycled supernate to avoid increasing the source term that could leak from the tank during retrieval.

### 3.1.3 Vacuum Retrieval System

The VRS uses the same articulated mast described in the MRS system above installed near the center of a 200-Series tank. The articulated mast has a vacuum head, which can be moved along the bottom of the tank with an effective horizontal reach of approximately 16 ft, which is sufficient to retrieve waste from the 12 remaining small-volume 200-Series tanks, avoiding the need to deploy an ITV. Air or water can be injected at the vacuum head to assist in mobilizing the waste. If needed, a series of five scarifying, high-pressure, low-volume water jets located around the outside of the vacuum head can be used to dislodge the waste. The central mast has the ability to use low-pressure water (approximately 125 psi) or high-pressure water (approximately 1,500 psi) to mobilize waste. The waste is moved to a batch vessel located above grade in the vessel/pump skid where load cells and a level gauge indicate the waste batch volume. The batch vessel has a working volume of about 400 gal.

During retrieval operations, the batch vessel is placed under a vacuum (created by the vacuum skid), which draws waste from the SST into the batch vessel. The waste is separated from the gas stream, which continues to the vacuum skid. When the batch vessel is full (~400 gal), the vacuum is broken, and the waste is combined with supernatant before transfer to the pump skid. A booster pump located on the pump skid draws waste from the batch tank through an ultrasonic de-agglomeration unit to reduce the particle size before transfer to the DST.

### 3.1.4 Secondary Retrieval Technologies

A number of secondary retrieval technologies also have been developed to help with the removal of heels projected to remain after the retrieval of certain SSTs using one of the primary retrieval technologies. These include:

- A remote water lance, which directs a thin stream of high-pressure (30,000 psi), low-volume (6 gpm) water to break up and mobilize hardened material;
- A mobile retrieval tool, which combines a remote water lance with a VRS;
- A high-pressure water mixer, which allows a focused stream of water to be directed at problematic waste in the tank to assist with mobilization and dissolution; and

- A remotely-controlled in-tank tracked vehicle capable of being deployed through a 12 in. riser that can be fitted with several tools, including a water cannon and scarifying bars, to aid retrieval operations.

### 3.1.5 Simultaneous Retrieval

Waste must be retrieved simultaneously to meet a reasonable schedule but simultaneous retrievals can affect blending and overall retrieval rate. The numbers of simultaneous retrievals that can occur are limited by the following:

- Physical space available in a tank farm for retrieval operations.
- Operations staff available to operate retrieval equipment.
- The transfer lines available to move retrieved waste.
- The ability to detect leaks during retrieval.
- The cost for infrastructure to support simultaneous retrievals.

Section 3.3.6 describes the assumptions to the model regarding SST constraints on simultaneous retrieval transfers.

### 3.1.6 Chemical Addition

Varying amounts of recycled supernate, water, or other chemicals may be added to the waste to support retrieval depending on the nature of the waste, the selected retrieval technology, and the destination tank.

Recycled supernate can be used to mobilize the waste and to transport the waste through pipelines as slurry. Alternately, water can be used to mobilize waste and has the added benefit of dissolving a portion of the water soluble fraction of the waste. Water may also be added during installation and startup of retrieval equipment and for flushing equipment or pipelines.

Chemicals such as sodium hydroxide may be added to the waste to facilitate dissolution of aluminum compounds (similar to caustic leaching) or to ensure that the composition of the retrieved waste remains within the DST operational chemistry controls to limit corrosion of the tank. Oxalic acid was added to C-106 to break down the large clumps of solids which could not be retrieved by the installed sluicing system. Generally, however, it is desirable to minimize the use of oxalic acid to the tank waste due to the limited solubility of its sodium salt.

## 3.2 SST MODEL DESCRIPTION

The Tank Farms, including the SSTs are modeled on two workspaces, East and West Area, shown on Figure D-1 and Figure D-2 respectively. Each Farm is a collection of specific tank equipment class with attributes set to define that specific tank, based on the physical characteristic of the tank and specific assumptions. A list of the SST tanks, equipment class and modeled volumes is presented in Tables B-1, and Table B-2 in Appendix B. The HTWOS model simulates pumping operation between the SSTs and the DST or WRF by calling a pump procedure that moves material from the source tank into the destination tank at a defined pump rate. Discussion of the pumping procedure core function is provided in Section 2.3.5. Interim

stabilization has been completed; therefore, no interim stabilization of single-shell tanks is modeled. The assumptions presented below define the logic for the SST process.

## 3.3 SST MODEL ASSUMPTIONS

### 3.3.1 SST Retrieval History

As of 4/1/2007, retrieval actions have been completed or are in progress (IP) for the following tanks:

**Table 3-2 SST Retrieval History and Status**

| Tank | Start Date | End Date |
|---|---|---|
| C-103 | 11/06/2005 | 8/23/2006 |
| C-106 | 11/18/1998 | 12/31/2003 |
| C-108 | 12/20/2006 | IP |
| C-201 | 10/25/2005 | 3/23/2006 |
| C-202 | 6/30/2005 | 8/11/2005 |
| C-203 | 6/30/2004 | 3/24/2005 |
| C-204 | 7/23/2006 | 12/11/2006 |
| S-102 | 12/16/2004 | IP |
| S-112 | 9/28/2003 | 3/28/2007 |

***Basis:*** The retrieval history and status is indexed to 4/1/2007 to match the tank waste inventory and historical transfer data used as input to the model run. The retrieval history is not used as a constraint in the HTWOS model. If retrieval has been completed, the HTWOS model uses the inventory reported in the Best-Basis Inventory (BBI) as the residual if the data are available. The data presented in the table above represents the progress made in retrieving SST wastes at the time that the assumptions were developed. Since 4/1/2007, the retrieval of waste from tank C-109 was started on 6/19/2007. The retrieval end date of 8/23/2006 for tank C-103 is based on the completion of the final water rinses.

### 3.3.2 Near Term SST Retrieval Sequencing (through 2018)

The sequence for near-term retrieval of SST wastes is given in Table 3-3. Retrieved SST wastes from C-Farm, S-102, S-105, and S-109 tanks shall start after the dates given below. When the DST becomes available, retrieving at the rates derived using the minimum durations in Table 3-4, and proceeding as the available DST space and model logic allows.

**Table 3-3** Near-Term Single-Shell Tank Retrieval Modeling Assumptions

| Single-Shell Tank | Retrieved To | Start Date |
|---|---|---|
| C-108 | AN-106 | 12/20/2006 |
| C-109 | AN-106 | TBD |
| S-102 | SY-102 | 10/1/2008 |
| C-104 | AN-101 | 6/1/2008 |
| S-109 (partial) | SY-101 | FY 2010-2011 |
| S-109 (partial) | DBVS | FY 2011-2013 |
| C-107 | AY-101 | 9/1/2008 |
| C-110 | AN-106 | 1/1/2011 |
| C-112 | AN-101 | TBD |
| S-109 (partial) | BVS | FYs 2014-2015 |
| C-101 | AN-101 | TBD |
| C-105 | AN-101 | TBD |
| C-102 | AZ-101 | 11/1/2013 |
| C-111 | AY-101 | TBD |
| S-105 (partial) | BVS | FYs 2015-2017 |
| S-105 (partial) | SY-102 | FYs 2015-2017 |
| S-105 (partial) | SY-102 | FY 2018 |

The model uses the start date of the first SST retrieved to a specific DST, and retrieves the waste from the other tanks designated for the same DST receiver as soon as the previous tank retrieval has been completed, unless a start date is specified.

***Basis:*** The SSTs to be retrieved are in the near term are based on those identified in RPP-21216, Single *Shell Tank Retrieval Selection and Sequence* document. These dates may be revised to incorporate the latest planning information, or in deference to other assumptions (e.g., the dates for S-105 and S-109 retrieval depends on the operation of the DBVS and BVS).

### 3.3.3 SST Long Term Retrieval Sequence (Beyond 2019)

The life-cycle priorities for sequencing the retrieval of SST waste are to minimize mission duration, by:

- Balancing feed to WTP, STP, and TRU,
- Balancing HLW WTP feed and LAW WTP feed,
- Providing for incidental blending; and
- Implementing designated intentional blends.

***Basis:*** This is the current SP3 assumption and may vary in future runs. Additional priorities may need to be considered such as risk or hazards, logistics, and tank closure strategy. The challenge will be to incorporate such considerations without adversely impacting the overall mission, particularly the amount of HLW glass produced and the mission duration. Minimizing treatment mission duration was used as a placeholder goal due to the lack of practical metric for determining how well the entire retrieval sequence and associated timing impacts the risk to human health and the environment.

### 3.3.4 Waste Retrieval Facilities

The model assumes that the B-Complex WRF will be available of 6/21/2018 and the T-Complex WRF will be available on 6/21/2019. Wastes retrieved from tanks in the B or T complexes before the WRFs are available will be at a lower insoluble solids concentration of ≤ 5 wt% after the application of wash factors..

Compliant transfer lines will be constructed to support retrievals from B and T complex before the WRFs are made available; one line for each complex.

***Basis:*** Because of the distance of tanks in the NW and NE quadrants from the DST system, waste will be initially retrieved into Waste Receiving Facilities (WRFs), each containing 6 tanks with a combined operating volume of 150,000 gallons. WRFs will provide the necessary tanks and pumps to support retrieval and conditioning of the waste before transfer to the DST System. The B-Complex WRF is estimated to be available for use in June 2018 and the T-Complex WRF in June 2019. The B- and T-Farm SSTs containing CH-TRU waste are currently planned to be retrieved directly to the Supplemental TRU Treatment System without requiring a WRF or impacting the DST system. Each WRF is modeled as follows:

- Each WRF tank may receive waste from one SST at any time.
- Transfers from WRFs will normally occur when 150,000 gallons of waste are available to transfer. Exceptions to this are as follows:
    - When retrieval of waste from an individual SST is completed, but the retrieved waste does not fill the WRF tank, then the waste retrieved from one SST is transferred out of the WRF tank before retrieving waste from another SST into the WRF tank.
    - When retrieval of waste from the quadrant associated with a WRF is completed, no SST waste remains to be retrieved into the WRF tank.

***Issue:*** Design activities for the WRFs have not started. The modeled configuration is based on preliminary information regarding the amount of waste that should be transferred to limit the flush solutions to a reasonable volume

### 3.3.5 SST Farm Upgrades

Any SST farm upgrades needed to support the retrieval of SST waste will be completed before the retrieval dates projected by the HTWOS model.

***Basis:*** Results from the model will be used to establish the need dates for upgrading the SST farms.

### 3.3.6 Constraints on Simultaneous Retrieval

The most limiting condition(s) resulting from application of the following constraints:

- Retrieval and transfer systems in the NE (B, BX, and BY farms) and NW (T, TX, and TY farms) quadrants can support a maximum of 6 simultaneous retrievals in each tank farm and a total of six simultaneous retrievals in each quadrant (after the WRFs are constructed).

- Retrieval and transfer systems in the SE (A, AX, and C farms) and SW (S, SX, and U farms) quadrants can support a maximum of 2 simultaneous retrievals in each tank farm and a total of two simultaneous retrievals in that quadrant.
- A maximum of 7 total simultaneous retrievals can be performed at one time. (This assumes that labor resources are available.)
- The waste from up to two SSTs may be retrieved to one DST at one time.
- The waste from one only SST may be retrieved into one WRF tank at a time.
- These constraints also apply to retrievals going directly from SSTs to supplemental treatment processes.

***Basis:*** See section 3.1.5 for a discussion of simultaneous transfers.

### 3.3.7 Retrieval Rates

Table 3-4 identifies the assigned retrieval technology and the minimum retrieval duration based on the assigned technology.

***Basis:*** The SST waste retrieval rates are based on the retrieval technology that is planned to be used for each tank The HTWOS model uses an average retrieval rate based on the initial inventory and the minimum retrieval duration. This table was derived from assumptions and calculations documented in SVF-1283, *Single-Shell Tank Retrieval Assumptions for Mission Modeling, SVF-1283 Rev 2.xls*. See section 3.2 for a discussion of the retrieval technologies.

Waste transfer durations are calculated by dividing the total volume being transferred by the transfer rate. There is a five-day delay between subsequent uses of transfer routes having common components starting after the C-Farm retrievals have been completed, to account for the closeout of one transfer route and the establishment of another route.

***Issue:*** Tanks T-104, T-105, and T-112 are planned as feed to the Supplemental TRU Treatment processes and have been identified as possibly having a hard heel requiring additional retrieval efforts. The modeled retrieval durations are based on providing the waste to feed those operations at the stated capacity and do not include any time for retrieving a hard heel.

**Table 3-4 SST Retrieval Technology Assignments. (3 Sheets)**

| Tank | Retrieval Technology | Projected As-Retrieved Volume, gallons | Minimum Retrieval Duration, days | Tank | Retrieval Technology | Projected As-Retrieved Volume, gallons | Minimum Retrieval Duration, days |
|---|---|---|---|---|---|---|---|
| A-101 | MS | 886,796 | 274 | S-110 | MS | 1,107,346 | 362 |
| A-102 | MS | 109,890 | 106 | S-111 | MS | 802,803 | 354 |
| A-103 | MRS | 2,980,908 | 1,449 | S-112 | RC | N/A | N/A |
| A-104 | MRS | 1,295,462 | 630 | SX-101 | MS | 1,206,961 | 467 |
| A-105 | MRS | 1,425,896 | 693 | SX-102 | MS | 925,794 | 425 |
| A-106 | MS | 155,476 | 317 | SX-103 | MS | 1,470,505 | 515 |
| AX-101 | MS | 1,124,599 | 517 | SX-104 | MRS | 3,285,907 | 1,198 |
| AX-102 | MRS | 1,387,923 | 675 | SX-105 | MS | 978,370 | 444 |
| AX-103 | MS | 237,955 | 336 | SX-106 | MS | 967,002 | 272 |
| AX-104 | MRS | 265,192 | 129 | SX-107 | MRS | 1,686,465 | 615 |
| B-101 | MRS | 1,752,508 | 426 | SX-108 | MRS | 1,595,206 | 582 |
| B-102 | MS | 65,935 | 50 | SX-109 | MRS | 2,355,301 | 859 |
| B-103 | MRS | 1,512,352 | 368 | SX-110 | MRS | 1,513,553 | 552 |
| B-104 | MS | 5,038,025 | 356 | SX-111 | MRS | 1,782,528 | 650 |
| B-105 | MRS | 2,577,446 | 626 | SX-112 | MRS | 1,598,808 | 583 |
| B-106 | MS | 1,980,762 | 266 | SX-113 | MRS | 846,370 | 309 |
| B-107 | MRS | 322,818 | 346 | SX-114 | MRS | 1,965,047 | 716 |
| B-108 | MS | 447,824 | 255 | SX-115 | MRS | 106,688 | 39 |
| B-109 | MS | 813,835 | 267 | T-101 | MRS | 1,710,481 | 416 |
| B-110 | MRS | 490,832 | 412 | T-102 | MS | 310,032 | 233 |
| B-111 | MRS | 482,906 | 409 | T-103 | MRS | 1,242,628 | 302 |
| B-112 | MRS | 1,417,490 | 345 | T-104 | MRS | 2,698,725 | 469 |
| B-201 | VRS | 261,430 | 45 | T-105 | MRS | 196,016 | 296 |
| B-202 | VRS | 257,827 | 45 | T-106 | MRS | 978,456 | 238 |
| B-203 | VRS | 356,291 | 62 | T-107 | MRS | 346,065 | 355 |
| B-204 | VRS | 352,689 | 61 | T-108 | MRS | 687,867 | 167 |
| BX-101 | MRS | 1,475,128 | 430 | T-109 | MRS | 1,541,171 | 375 |
| BX-102 | MRS | 1,616,820 | 472 | T-110 | MRS | 2,940,082 | 510 |
| BX-103 | MS | 1,011,911 | 262 | T-111 | MRS | 3,289,509 | 571 |
| BX-104 | MS | 1,588,916 | 272 | T-112 | MRS | 133,143 | 271 |
| BX-105 | MS | 688,961 | 260 | T-201 | VRS | 266,233 | 46 |
| BX-106 | MS | 163,628 | 245 | T-202 | VRS | 220,603 | 38 |

**Table 3-4 SST Retrieval Technology Assignments. (3 Sheets)**

| Tank | Retrieval Technology | Projected As-Retrieved Volume, gallons | Minimum Retrieval Duration, days | Tank | Retrieval Technology | Projected As-Retrieved Volume, gallons | Minimum Retrieval Duration, days |
|---|---|---|---|---|---|---|---|
| BX-107 | MS | 5,653,784 | 379 | T-203 | VRS | 291,449 | 51 |
| BX-108 | MRS | 1,401,880 | 409 | T-204 | VRS | 291,449 | 51 |
| BX-109 | MS | 3,143,383 | 312 | TX-101 | MS | 1,205,681 | 254 |
| BX-110 | MRS | 2,234,022 | 652 | TX-102 | MS | 548,839 | 117 |
| BX-111 | MRS | 2,115,145 | 617 | TX-103 | MS | 368,071 | 91 |
| BX-112 | MS | 2,656,805 | 300 | TX-104 | MS | 559,781 | 246 |
| BY-101 | MS | 1,289,415 | 355 | TX-105 | MRS | 3,877,893 | 1,414 |
| BY-102 | MS | 894,033 | 139 | TX-106 | MS | 936,401 | 347 |
| BY-103 | MRS | 3,137,010 | 762 | TX-107 | MRS | 1,374,714 | 334 |
| BY-104 | MS | 1,232,292 | 367 | TX-108 | MS | 317,978 | 267 |
| BY-105 | MRS | 3,445,611 | 837 | TX-109 | MS | 5,920,756 | 352 |
| BY-106 | MRS | 3,207,856 | 780 | TX-110 | MRS | 3,383,170 | 822 |
| BY-107 | MRS | 2,493,391 | 606 | TX-111 | MS | 899,487 | 353 |
| BY-108 | MRS | 2,268,845 | 551 | TX-112 | MS | 1,663,941 | 267 |
| BY-109 | MS | 697,315 | 325 | TX-113 | MRS | 4,160,076 | 1,011 |
| BY-110 | MS | 999,874 | 353 | TX-114 | MRS | 3,674,960 | 893 |
| BY-111 | MS | 1,322,006 | 183 | TX-115 | MRS | 3,772,224 | 917 |
| BY-112 | MS | 1,230,854 | 141 | TX-116 | MRS | 3,977,557 | 967 |
| C-101 | MRS | 1,658,847 | 806 | TX-117 | MRS | 3,440,808 | 836 |
| C-102 | MS | 385,950 | 487 | TX-118 | MS | 670,804 | 310 |
| C-103 | RC | N/A | N/A | TY-101 | MRS | 1,795,737 | 524 |
| C-104 | MS | 328,889 | 446 | TY-102 | MS | 196,388 | 76 |
| C-105 | MRS | 1,859,378 | 904 | TY-103 | MRS | 1,961,444 | 572 |
| C-106 | RC | N/A | N/A | TY-104 | MRS | 1,460,718 | 426 |
| C-107 | MS | 317,001 | 438 | TY-105 | MRS | 2,308,470 | 673 |
| C-108 | MS | 123,363 | 346 | TY-106 | MRS | 714,284 | 208 |
| C-109 | MS | 133,401 | 357 | U-101 | MRS | 1,044,499 | 381 |
| C-110 | MS | 248,052 | 388 | U-102 | MS | 770,988 | 417 |
| C-111 | MRS | 1,519,557 | 1,477 | U-103 | MS | 1,078,950 | 442 |
| C-112 | MS | 173,820 | 335 | U-104 | MRS | 1,505,147 | 549 |
| C-201 | RC | N/A | N/A | U-105 | MS | 930,437 | 431 |
| C-202 | RC | N/A | N/A | U-106 | MS | 400,133 | 150 |
| C-203 | RC | N/A | N/A | U-107 | MS | 799,302 | 399 |

**Table 3-4 SST Retrieval Technology Assignments. (3 Sheets)**

| Tank | Retrieval Technology | Projected As-Retrieved Volume, gallons | Minimum Retrieval Duration, days | Tank | Retrieval Technology | Projected As-Retrieved Volume, gallons | Minimum Retrieval Duration, days |
|---|---|---|---|---|---|---|---|
| C-204 | RC | N/A | N/A | U-108 | MS | 1,126,908 | 475 |
| S-101 | MS | 596,492 | 348 | U-109 | MS | 990,179 | 434 |
| S-102 | MS | 436,506 | 453 | U-110 | MRS | 2,057,507 | 750 |
| S-103 | MS | 631,153 | 307 | U-111 | MS | 548,839 | 360 |
| S-104 | MRS | 2,567,839 | 624 | U-112 | MRS | 1,465,522 | 534 |
| S-105 | SD/MS | 1,447,600 | 368 | U-201 | VRS | 146,155 | 53 |
| S-106 | MS | 1,373,833 | 385 | U-202 | VRS | 144,954 | 53 |
| S-107 | MS | 481,461 | 350 | U-203 | VRS | 143,753 | 52 |
| S-108 | MS | 1,703,004 | 419 | U-204 | VRS | 137,074 | 50 |
| S-109 | SD/MS | 1,746,000 | 413 | - | - | - | - |

Key

| | |
|---|---|
| MS | Modified Sluicing |
| MSwR | Modified Sluicing with Recycle |
| MRS | Mobile Retrieval System |
| RC | Retrieval Complete |
| SD | Selective Dissolution |
| VRS | Vacuum Retrieval System |

| | |
|---|---|
| | Tanks designated for Supplemental TRU Treatment |
| | Additional efforts are anticipated to be needed to remove a hard heel from the tank |
| | Waste retrieval operations are complete |

Note:

It is expected that all the retrievals performed using MS will include the recycle of the sluicing liquids. The use of recycle was considered when estimating the as-retrieved volumes for wastes retrieved using MS. The recycle stream will be modeled explicitly only for the retrieval of wastes from the C-Farm tanks within this model run.

### 3.3.8 Retrieved Solution Requirements

Table 3-4 provides an estimate of the as-retrieved volume generated during the retrieval of wastes from the various SSTs. The HTWOS model will add water and supernate (for the C-Farm tanks) as needed to generate the as-retrieved volumes, after the application of water-wash factors.

***Basis:*** The as-retrieved volumes in Table 3-4 are based on the capacity and performance of the retrieval systems for the use of the vacuum retrieval system and the mobile retrieval system. The as-retrieved volumes for wastes retrieved using modified sluicing are based on the capacity and performance of the modified sluicing retrieval system or on the volume required to achieve a concentration of 5 molar Na in the liquid phase of the retrieved waste (after the application of water-wash factors), whichever volume is greater. These volumes are based on the recycling of supernates even though the HTWOS model does not explicitly model supernate recycle throughout the whole mission. Supernate recycle is not modeled in HTWOS after the C farm retrievals to simplify the modeling effort. The bases for the as-retrieved volumes are documented in SVF-1283, Rev. 2.

As noted in assumption 3.3.4 the wastes retrieved from tanks in the B or T complexes before the WRFs are available will be at a lower insoluble solids concentration of ≤ 5 wt% after the application of wash factors.

***Issue:*** Dilution of supernatant liquids to 5 M sodium may not be necessary for all waste. The 5 M sodium end point was assumed as a conservative upper-bound of the sodium concentration to avoid solids formation issues in the absence of details about the chemistry of the waste in each SST. Use of 5 M as an upper concentration limit may over-estimate the volumes generated during salt cake retrieval and it is expected that an evaluation of specific tank's waste chemistry could allow the use of less liquid for retrieval.

The concentration constraint of 5M Na is a conservatively low value based on experience showing that no solubility issues should occur. A maximum value of 5 wt% for the solid loading in a slurry is imposed to minimize the pressure drop when transferring slurries over long distances. If the transfer distance is low, a higher solids loading of 10 wt% may be used.

### 3.3.9 Retrieval Systems Availability

A sufficient number of retrieval systems are available for use and retrieval systems will be reused when it is cost effective to do so.

***Basis:*** An unlimited number of retrieval systems have been assumed so that the number of retrieval systems available does not constrain completion of the mission and so the analysis will show if SST waste retrieval is constrained by retrieval rates. An estimate can be made of the total number of retrieval systems needed to accomplish the mission if the duration for the removal, decontamination, service, repair, and reinstallation of retrieval systems is known.

### 3.3.10 SST Residual Waste Inventory

The residual waste remaining in the SSTs and DSTs after retrieval is complete will be estimated as follows:

- 200 Series SSTs: BBI data for tanks where retrieval actions have been completed, when available, or 12 $ft^3$ of slurry containing water-washed solids and 24 wt% water as interstitial liquid.
- 100 Series SSTs: BBI data for tanks where retrieval actions have been completed, when available, or 290 $ft^3$ of 35 wt% water-washed solids with liquids at ½ the concentration of bulk as-retrieved supernate. Determination of the as retrieved supernate composition is described in Assumption 3.3.88

***Basis:*** The 12 $ft^3$ and 290 $ft^3$ residual waste volumes are based on an Ecology analysis of the residual waste volumes observed to date in the bottom of the SSTs after waste retrieval. These volumes ignore waste on the tank walls and equipment left in the tanks. The assumption of 24 wt% water as interstitial liquid in the 200-Series SSTs is based on BBI data for the C-200 tanks (circa 11/5/2007). The waste residual conditions assumed for the 100-Series SSTs provide an upper bound estimate of the inventory that will be left in the tanks. Ecology has expressed a desire that future retrieval operations leave less waste (than the 12 and 290 $ft^3$) as a residual.

### 3.3.11 SST Waste Leaks

No waste is assumed to leak from the SSTs during the retrieval process.

***Basis:*** HTWOS has been designed so that all the waste contained in the single shell tanks is retrieved. No leaks are assumed to occur during waste retrieval to provide an upper bound estimate of product quantities and of mission duration. The projected composition of the retrieved waste may be used in a separate effort to estimate the impact of a leak of waste during retrieval actions.

# 4.0 DOUBLE SHELL TANK SYSTEM

This section describes the activities associated with the storage of tank waste prior to transfer to the waste treatment plant (WTP).

## 4.1 DST PROCESS DESCRIPTION

The Double Shell Tank (DST) system consists of, double-contained underground storage tanks whose primary function is to safely store the tank waste until it can be transferred to various pretreatment and treatment facilities. The DSTs consist of a primary and secondary carbon steel tank within an outer reinforced concrete structure.

There are 28 DSTs on the Hanford Site with a total holding capacity of about 32 Mgal:

- 4 DSTs have 1,000,000 gal capacity,
- 16 DSTs have 1,120,000 gal to 1,160,000 gal capacity, and
- 8 DSTs have 1,250,000 gal capacity.

The DSTs are used to support a number of different functions, which include:

- Storing of waste currently in the DST System, including segregation of the RH-TRU, concentrated-complexed (CC) wastes, and DSSF/DSS wastes;
- Receiving and storing waste to be retrieved from the SSTs, especially near-term retrievals;
- Sending and receiving waste (both slurry and supernate) cross-site from 200 West to 200 East Area;
- Staging waste for delivery to WTP;
- Staging supernate for LAW feed for IPS and West STP
- Receiving high-cesium eluate from the IPS;
- Water washing of some of the RH-TRU waste;
- Staging dilute waste for 242-A Evaporator feed;
- Storing concentrated waste from 242-A Evaporator operation;
- Precipitating the strontium and TRU in the CC waste currently stored in AN-102 and AN-107;
- Reserving storage space for emergency purposes; and
- Incidental and intentional waste blending, including segregation of incompatible wastes.
- Receive and storing new wastes generated by miscellaneous Hanford facilities

The tank farms contain underground piping; diversion boxes and valve pits; and above-ground transfer lines to facilitate the transfer and routing of DST between tanks, between tank farms, to

and from the different facilities, and between the 200 E and 200 W Areas. Figure 1-2 is an overview of the waste transfer system.

Prior to a waste transfer from tank farms, a pre-transfer warming flush may be performed with heated water to mitigate the precipitation of salts. After the waste transfer is complete, a post-transfer pipeline flush of inhibited water (process water containing at least 0.01 M sodium hydroxide and 0.011 M sodium nitrite) is sent through the transfer line. Combined, the pre- and post-transfer flushes will not exceed three times the transfer pipeline volume and never more than 7,500 gallons.

Transfer pumps are used to pump waste from SST to a DST, one DST to another DST, to the 242-A Evaporator, and to deliver feed to the various treatment facilities. Variable inlet height transfer pumps provide the capability to decant supernate from above a layer of settled solids. The mixer pumps provide motive force to mobilize sludge for transfer, improve solids blending, enhance dissolution of settled salts, and mix staged feed before sampling and delivery.

The retrieval of waste from the DSTs containing double-shell slurry feed (DSSF) or double-shell slurry (DSS) is complicated by the settled salts and retained gas in those tanks. Each of these tanks contains a large layer of settled salts with retained gas and a layer of saturated supernate with a floating crust on the surface. These tanks (AN-103, AN-104, AN-105, and AW-101) are all designated as “Waste Group A” tanks because of their potential for buoyant-displacement gas release events. The strategy selected for retrieving this waste comprises the following key operational steps:

- Slowly decant the supernate from the source tank to another DST while adding water to the pump inlet to dissolve any entrained salts and dilute the waste.
- Add dilution water to the source tank and install and operate a mixer-pump to dissolve the majority of the settled salts and release any remaining gas.
- Stage, sample, and deliver the diluted supernate and the dissolved salts to the WTP as LAW feed.

New waste is transferred to the DST system by facility deactivation of the Plutonium-Uranium Extraction (PUREX) Plant, T-Plant, and Inactive miscellaneous underground storage tanks (IMUST). New waste is also received into the DST system from the operation of the 222-S Laboratory. Evaporation from high heat aging tanks is substantial (e.g., tank AY-102 loses 10 inches per year). The aging waste system also has the capability to return primary vent condensates to the tanks. For the near term, the condensate vented is being routed to the AY-101 tank.

The tank farm operating specification contains concentration requirements for $[OH^-]$, $[NO_2^-]$, and $[OH^-]+[NO_2^-]$. The in-growth of $NO_2^-$ in most tanks keeps the waste at an acceptable concentration. Usually it is $[OH^-]$ that requires adjustment.

## 4.2 DST MODEL DESCRIPTION

The Tank Farms, including the DSTs are modeled on two workspaces, East and West Area, shown on Figure D-1 and Figure D-2 respectively. Each Farm is a collection of specific tank equipment class with attributes set to define that specific tank, based on the physical characteristic of the tank and specific assumptions. A list of the DST tanks, equipment class and

modeled volumes is presented in Table B-1, and Table B-2. The HTWOS model simulates a pumping operation between two tanks by calling a pump procedure that moves material from the source tank into the destination tank at a defined pump rate. Discussion of the pumping procedure core function is provided in 2.3.5. The assumptions below help to define the logic for the DSTs.

## 4.3 DST MODEL ASSUMPTIONS AND ISSUES

### 4.3.1 Sodium Hydroxide Additions

During retrieval of waste from SSTs to the DST system, sodium hydroxide and sodium nitrite will be added as needed so that the as-retrieved liquid phase composition satisfies the DST waste chemistry limits given in Table 3-4 of HNF-SD-WM-OCD-015, Rev 17.

***Basis*:** Caustic is added to satisfy existing operations requirements not feed delivery requirements. The TFC has implemented a tank chemistry program to track all the DSTs for compliance with the Tank Farm Operating Specification Document (OSD) OSD-T-151-00007, and correct deficiencies. The tank farm operating specification contains concentration requirements for $[OH^-]$, $[NO_2^-]$, and $[OH^-]+[NO_2^-]$. The in-growth of $NO_2^-$ in most tanks keeps the waste at an acceptable concentration. Usually it is $[OH^-]$ that requires adjustment. When the WTP contract Specification 7 was written (predates the chemistry program), an exception was granted for free hydroxide to allow continued feed delivery if the waste did not comply with the OSD.

HTWOS has not been programmed to perform a caustic demand calculation in conjunction with the caustic adjustments or to evaluate the waste chemistry against all current corrosion limits. Instead, caustic is added to the liquids associated with sludge retrievals to bring the free OH- concentration up to 0.05 M.

***Issue 1:*** HTWOS has not been programmed to perform a caustic demand calculation in conjunction with the caustic adjustments, to predict the waste chemistry changes occurring because of the caustic addition, or to evaluate the waste chemistry against all current corrosion limits.

***Issue 2:*** The model may overstate the post-adjustment free hydroxide because it ignores aluminum that may have dissolved. The solubility of aluminum is a function of $[OH^-]$ and total ionic strength. For the Al-Na-OH-$H_2O$ system, maximum aluminum solubility occurs when $[OH^-]$ is about 6 M. When other sodium salts are present at maximum ionic strength, as in tank waste, maximum aluminum solubility occurs at about 2 M $OH^-$. Dilution with water of solutions containing aluminum may precipitate gibbsite.

***Issue 3:*** The use of wash factors to estimate the retrieved waste composition doesn't provide an accurate prediction of the actual waste chemistry.

### 4.3.2 Flush Volumes

Flush volumes for various DST system waste transfers are listed in Table 4-1. Flush waste appears in the tank that is receiving the transfer.

**Table 4-1 Waste Transfer Flush Volumes.**

| Transfer Type | Flush Volume per Transfer (gallons) |
|---|---|
| Cross-site | 24,000 |
| Northwest quadrant WRF to West Area cross-site transfer tank | 6,000 |
| Northeast quadrant WRF to receiving tank | 7,500 |
| East Area DST to DST or DST to LAW feed staging tank transfer | 500 |
| Feed Staging Tanks to WTP HLW Feed Receipt Tanks | 0[1] |
| Flush Volume from Miscellaneous Tank Farm Operations | 120 Kgal/year[2] |

Note:

1. No flush volumes are modeled for the feed delivery transfers.
2. Value based on estimated maximum limit set by RPP-8554 Rev. 2.

DST double-shell tank

LAW low-activity waste

SST single-shell tank

WRF Waste Retrieval Facility

WTP Waste Treatment Plant

***Basis:*** New waste requiring storage in the DST system will be generated by flushing transfer lines and flushing operations associated with miscellaneous operations in the tank farms. Line flushes are modeled to approximate the impact on DST space requirements. The 120 Kgal/year of miscellaneous new waste flush volumes is a maximum estimated value identified in earlier efforts to model DST space management (RPP-8554 *Single-Shell Tank Retrieval Sequence and Double-Shell Tank Space Evaluation*). Most of flush volume can be removed by evaporation.

***Issue:*** Flushes associated with the WTP feed delivery transfers have not yet been added to the HTWOS model, but have been estimated as part of the tank-specific flow sheets (RPP-8218, *Generalized Feed Delivery Descriptions and Tank Specific Flowsheets*). However, estimated flush volumes from feed delivery transfer are small and are not considered to be a significant impact to the overall DST space management.

### 4.3.3 Minimum DST Waste Level

Supernatants can be pumped down to within 12-inches of a settled solid layer and liquids or slurries can be removed to within 12 inches above the bottom of the tank. Variations for SY-101, SY-102, and AY/AZ farm are described in Table 4-2. Wastes can be removed down to the bottom of a DST during final cleanout. Supernatants can be pumped down to within 10 inches of a settled solids layer.

**Table 4-2 Minimum Liquid Level Constraints for Specific DSTs.**

| Tank | Minimum Liquid Level | Notes |
|---|---|---|
| SY-101 | 100 inches (275 Kgal) | Restriction lifted on 1/29/2012 after transfer pump is replaced |
| SY-102 | 200 inches (550 Kgal) | Restriction is lifted after the existing sludge layer is transferred across the site to tank AN-104 |
| AY/AZ DSTs | <64 inches (176 Kgal) | The AZ/AY farm tanks can be pumped down below 64 inches if the annulus ventilation is shut down. The annulus ventilation will be shut down when necessary to deliver feed to the WTP allowing the waste to be pumped down within 12 inches of the bottom. |

***Basis:*** Removal of waste from DSTs to within 12 inches of the bottom of the tank is a number based on maintaining 6 inches of submergence for transfer pump suctions typically positioned 6 inches above the bottom. Actual pump configurations and the required submergence may vary from this assumption. The existing pump in tank SY-101 cannot pump to less than 100 inches because of the physical location of the suction. Project W-521 will upgrade the mixing and transfer equipment for tank SY-101. Tank SY-102 is a very active tank, but the minimum liquid level (200 inches) is maintained well above the existing sludge layer to avoid inadvertent entrainment of high transuranic (TRU) solids. The waste volume in AY and AZ tank farm DSTs will not be pumped to less than 64 inches (176 Kgal or 670 $m^3$) while the annulus ventilation system is operating (OSD-T-151-00007). This precaution precludes contaminated primary ventilation air from being drawn into the annulus via annulus pump pit and leak detection pit drain lines that end 5 feet above the bottom of the tank.

***Issue 1:*** The standard operating procedure for AY and AZ tanks requires a minimum liquid level of 1.93 meters (76 inches) for storing waste. For aging waste tanks, there is an OSD minimum level requirement related to proper submergence of airlift circulators. These limits need to be reconsidered in the context of feed delivery rather than storage.

***Issue 2:*** The minimum liquid level of 12 inches above the bottom of the tank is the minimum operating level required by procedure. If heat-generating solids remain in a tank, a safety analysis may indicate that more liquid must remain above the solids to prevent a steam bump.

### 4.3.4 Maximum DST Level

The Maximum DST fill levels are given in Table 4-3.

**Table 4-3 Maximum DST Fill Levels.**

| DSTs | Maximum Fill Height Limit (inches) | Maximum Fill Volume1 (Kgal) |
|---|---|---|
| AN-101 | 416 | 1,144 |
| AN-102 | 416 | 1,144 |
| AN-103 | 416 | 1,144 |
| AN-104 | 416 | 1,144 |
| AN-105 | 416 | 1,144 |
| AN-106 | 416 | 1,144 |
| AN-107 | 416 | 1,144 |
| AP-101 | 454 | 1,247 |
| AP-102 | 454 | 1,247 |
| AP-103 | 454 | 1,247 |
| AP-104 | 454 | 1,247 |
| AP-105 | 454 | 1,247 |
| AP-106 | 454 | 1,247 |
| AP-107 | 454 | 1,247 |
| AP-108 | 454 | 1,247 |
| AW-101 | 416 | 1,144 |
| AW-102 | 409 | 1,125 |
| AW-103 | 416 | 1,144 |
| AW-104 | 416 | 1,144 |
| AW-105 | 416 | 1,144 |

**Table 4-3 Maximum DST Fill Levels.**

| DSTs | Maximum Fill Height Limit (inches) | Maximum Fill Volume1 (Kgal) |
|---|---|---|
| AW-106 | 416 | 1,144 |
| AY-101 | 364 | 1,001 |
| AY-102 | 364 | 1,001 |
| AZ-101 | 364 | 1,001 |
| AZ-102 | 364 | 1,001 |
| SY-101 | 416 | 1,144 |
| SY-102 | 421 | 1,158 |
| SY-103 | 416 | 1,144 |
| - | Total | 32,275 |

1. Fill volumes are calculated from fill heights and are rounded to the nearest 1,000 gallons

***Basis:*** The maximum operating levels for DST are based on the operating specifications identified in OSD-T-151-00007 Rev. 1. In this revision of the operating specifications, the maximum operating level for AP-Farm tanks was increased from 449 inches (1.233 Mgal) to 454 inches (1.247 Mgal). At liquid levels above 426 inches, the nominal 2750 gallons per inch of tank level begins to decrease, dropping at a non-linear rate. Volumes are based on methodology in RPP-13019, *Determination of Hanford Waste Tank Volumes*. It is assumed that each AP-Farm tank will successfully pass the in-service leak testing required to utilize this increased operating level.

### 4.3.5 Tank Settling Endpoint

Insoluble solids retrieved from other SSTs and currently in the DST system are modeled as settling to 40 wt% solids within 30 days, except for C-Farm. Insoluble solids retrieved from C-Farm SSTs are modeled as settling to a solids loading comparable to that in the source SSTs within 2 days of transferring to a DST.

***Basis:*** The 40 wt% settled solids' loading is based on an analysis of the sludge in tank AY-102. Analysis of data from a core sampling event shows that the solids have compacted to about 48.7 weight % (dry solids). The water content is about 42.2%, and the remaining 9.1% of the sludge consists of dissolved solids in the interstitial liquids. Tank AY-102 has been core sampled several times since the initial sluicing of waste from tank C-106 with the most recent sampling event being core 308 taken in April 2003.

The solids level is accomplished in the model by settling to the same bulk solids volume observed in the SSTs or to an adjusted bulk volume based on mass dissolved during retrieval.

### 4.3.6 Tank Solids Management

The solids management strategy for the DSTs assumes that:

- DSTs supporting C-Farm retrieval will be operated with a minimal supernate layer so that they do not become Group A tanks even though they will be filled with significant quantities of solids.
- DSTs not supporting C-Farm retrieval are assumed to hold up to 10-wt% bulk solids based on the maximum operating level of each DST.

***Basis:*** This assumption is based on ORP-11242 key enabling assumptions.

### 4.3.7 Tank Space Allocation

The DSTs will be allocated to the uses listed in Table 4-4. The headspace above wastes in the DSTs will be allocated and tracked according to the categories and criteria given in Table 4-5.

***Basis:*** The emergency volume is based on HNF-3484, *Double-Shell Tank Emergency Pumping Guide. T*he Double Shell Tank Allocation designations are based on This assumption is based on ORP-11242 key enabling assumptions.

***Issue:*** The headspace in tanks SY-101 and SY-102 (and SY-103 after resolving the safety basis issues) not be allocated as emergency space because the TFC does not plan to transfer waste from the east area to the west area.

**Table 4-4 Double-Shell Tank Usage Allocations. (2 Sheets)**

| Double-Shell Tank Use | Double-Shell Tanks Allocated |
|---|---|
| WTP Feed Staging | AN-101, AN-102, AN-103, AN-104, AN-105, AN-107, AP-101, AP-102, AP-103, AP-104, AP-105, AP-106, AP-107, AP-108, AW-101, AY-101, AY-102, AZ-101, and AZ-102 |
| WTP Alternative (Back-up) HLW Feed Staging tanks | AN-103, AN-104 (cross-site receiver), and AN-105. At the modelers' discretion, other DSTs equipped with dual mixer pumps can be used to store and stage HLW feed. |
| HLW Slurry Receivers (Slurry Transfer Limitations) | Use AZ, AY, and AN farms, primarily for staging HLW solids. Try to avoid staging solids through AP or AW farms after retrieving the solids currently in those farms. |
| Supplemental Sludge Treatment Process Feed Staging | AW-103, AW-105, and SY-102 |
| Supplemental LAW Treatment Feed Staging | Feed from tanks S-105 and S-109 is provided directly to the DBVS and BVS operations and is not staged through any DSTs. Provide feed from SY-101 and SY-103 for the West Area Supplement Pretreatment and Supplemental Pretreatment, then use SY-101 and SY-103 to stage feed to those systems. |
| Sludge Transfer for Waste Feed Staging: | C Farm solids will be retrieved to tanks AN-101, AN-106, AY-101, and AZ-101. Some of these tanks may require additional equipment for mobilizing and transferring HLW solids into other DSTs for staging to the WTP. |
| In-tank Sr/TRU precipitation | Tank AP-102 will be used to perform in-tank precipitation of Sr and TRU from wastes in tanks AN-102 and AN-107. |

**Table 4-5 Double-Shell Tank Space Allocation Criteria.**

| Category | Criteria |
|---|---|
| Evaporator Operational Space | Space above waste in tanks used to support 242-A Evaporator operation. This includes tank AW-102, tank AW-106, and any DST used to receive or stage (sample) dilute waste to the evaporator. |
| Restricted TRU Space | Space above the TRU solids in tanks AW-103 and AW-105. |
| Restricted WTP Feed Tank Space | The WTP Hot Commissioning feed source tank or DSTs while being used to stage WTP feed. |
| Safety Basis Headspace | Space in tanks that cannot be used because of a safety issue associated with the waste. |

Notes:

1. Emergency space does not need to be associated with a specific tank but may be distributed throughout the DST system.

### 4.3.8 DST Emergency Space

The DST emergency space and LAW or HLW Waste Return Space will be allocated at 1.265 Mgal total. There is no LAW or HLW Non-Emergency Process Returns from WTP or Contingency space assumed.

***Basis:*** DOE Order 435.1, Radioactive Waste Management, requires that emergency space be reserved to store waste in case a leak should occur in a DST. In compliance with DOE Order 435.1, emergency space of approximately 1.14 Mgal was reserved to store waste in case of a leak in a DST. In addition to the emergency space to respond to potential DST leaks, the TFC was requested to provide the capability to receive up to one DST equivalent size tank of either LAW or HLW return from the WTP on an emergency basis. The combined space of 1.265 is based on HNF-3484 *Double-Shell Tank Emergency Pumping Guide*. .

***Issue:*** The headspace in tanks SY-101 and SY-102 (and SY-103 after resolving the safety basis issues) not be allocated as emergency space because the TFC does not plan to transfer waste from the east area to the west area.

### 4.3.9 WTP Returns

No waste streams or wastewaters are returned to DST system for WTP.

***Basis:*** Upset conditions such as waste returns from WTP are not assumed so that the number of retrieval systems available does not constrain completion of the mission. If delivered feed cannot be processed, the feed would be transferred back to the DST system and a recovery plan prepared.

### 4.3.10 Feed Segregation and Blending

The waste blending and segregation controls are listed in Table 4-6. There is no deliberate blending of waste to optimize WTP feeds other than the specific blending described in Table below.

**Table 4-6 Feed Control List Strategy**

| Feed Control List (FCL) (HNF-SD-WM-OCD-015, Table A-1) | Strategy |
|---|---|
| Blend off high-sulfate (Issue #1) | Decant and blend the AZ-102 supernate with supernates containing lower sulfate ($SO_4$) concentrations so that the final [$SO_4$]:[Na] ratio in AZ-102 and in any other tank receiving significant quantities of the high [$SO_4$] supernate will be less than a target level of 0.048 mole $SO_4$/mole Na after blending and any evaporator campaigns are completed. Constrain the blending of AZ-102 supernate to start after 9/30/2012. |
| Blend off high $^{233}U$ solids (Revised from FCL Issue # 2, | Blend the solids from C-104 with the solids from C-111 and C-112 in AN-101 so that the resulting ([$U_{fissile}$]/[$U_{total}$]) ratio is less than a target level of 9.4. |
| Prepare and protect hot commissioning feed (FCL Issue # 3) | The HLW and LAW hot commissioning feeds have already been consolidated in AY-102 as of January 2007 |
| Segregate Envelope C (Revised from FCL Issue # 4) | Segregate the waste in AN-102 and AN-107 from all other wastes until it has been partially pretreated in DSTs. |
| Segregate TRU sludge from complexed waste (FCL Issue # 5) | Do not add to or store additional waste with the insoluble solids currently in AW-103 and AW-105, with the exception that the addition of remote-handled TRU from SY-102 to either tank is permitted. Control the addition of wastes to SY-102 to avoid mixing the TRU solids in SY-102 with the additional wastes. |
| Reduce WTP hydrogen generation rate by blending (FCL Issue #6) | Blend the HLW solids in C-102 with the solids in AZ-101 to reduce the $H_2$ generation rate. |
| Segregate waste destined for TRU or low-level waste (LLW) packaging (FCL Issue # 7) | Do not add to or store additional waste with the insoluble solids currently in AW-103 and AW-105, with the exception that the addition of remote-handled TRU from SY-102 to either tank is permitted. Control the addition of wastes to SY-102 to avoid mixing the TRU solids in SY-102 with additional solids. Additional solids may be settled on top of the TRU solids in SY-102 as long as they are not mixed with the SY-102 solids and the transfer of wastes through SY-102 is controlled to avoid disturbing the TRU sludge layer. Do not transfer contact-handled TRU waste into the DST system. Segregate the remote-handled TRU waste from insoluble non-TRU solids. |

| Table 4-6 Feed Control List Strategy | |
|---|---|
| **Feed Control List (FCL) (HNF-SD-WM-OCD-015, Table A-1)** | **Strategy** |
| Segregate low-cesium SST waste for supplemental treatment (Revised from FCL Issue # 8) | Manage the low-curie waste (less than 0.05 Ci/liter $^{137}$Cs when normalized to 7 M Na) retrieved from tanks S-109 and S-105 to maximize the amount of low-cesium feed that can be made available to supplemental treatment. Keep the low-cesium fraction designated for feed separate from any high-cesium waste. |

***Basis:*** The feed segregation and blending strategy is based on the Waste Feed Control List documented in Table A-1 HNF-SD-WM-OCD-015, Rev. 17. The waste feed controls for blending off high $^{233}$U solids, segregating Envelope C wastes, and segregating low-cesium SST waste for supplemental treatment were revised in response to other assumptions.

### 4.3.11 DST Availability

No DST failures or replacements are assumed and no new DSTs are assumed.

***Basis****:* The space and function of the existing 28 DSTs will be available for the duration of the cleanup mission. DSTs are expected to exceed their design life during the feed delivery mission. There are no new DSTs planned to be built for the mission duration.

### 4.3.12 New Waste Introduced Via Deactivation

New wastes will be received into the 200 East Area DSTs from the deactivation of the Plutonium-Uranium Extraction (PUREX) Plant and the T-Plant. Table 4-7 provides the volumes and projected receipt schedules.

Flush volumes are calculated by multiplying the flush factor listed by the volume of the waste being received from the facility.

**Table 4-7 New Waste via Deactivation.**

| Facility | Estimated Waste Generation2 | Time Frame | Flush Factor | Notes |
|---|---|---|---|---|
| PUREX | 15 Kgal | FY 2025 | 0 | |
| T-Plant | 15 Kgal | FY 2025 | 22% | Although generated in 200 West, trucked to 200 East |
| IMUST Wastes | 500 Kgal total | FYs 2020 - 2030 | NA | |

Notes:

The 500 Kgal of IMUST wastes are modeled as being received on a quarterly basis.

HTWOS carries a customized schedule for volumes listed as variable. Customized waste addition schedules are updated each time the BBI is revised.

***Basis:*** The waste volumes from PUREX and T-Plant are based on engineering judgment. The B-Plant, the Waste Encapsulation and Storage Facility (WESF), the 300 Area facilities, the 400 Area facilities, the Waste Sampling and Characterization Facility (WSCF), and the 100 Area facilities are not anticipated to generate wastes that will need to be received into the DST system. Waste in Inactive Miscellaneous Underground Storage Tanks (IMUST) is part of Tank Farm facilities and is shown in the table for convenience even though it is not an outside waste source nor is it considered new waste. It is expected that IMUST waste will be retrieved with the wastes in an adjacent SST farm.

### 4.3.13 New Waste Introduced Via Operations of 222-S

Approximately 5,000 gallons of liquid waste from the 222-S Laboratory will be received annually from FY 2007 through FY 2017. The annual waste volume received from the 222-S Laboratory will increase to 10,000 gallons in FY 2018 and remain at that annual volume until waste processing is complete. The 222-S waste will be received into the West Area DST system via tank SY-102 and will be accompanied by a water flush, whose volume is equal to 22% of the received waste volume.

***Basis:*** The 222-S Laboratory is expected to remain in operation until all the Hanford tank wastes have been treated and immobilized. The 222-S Laboratory wastes will be received into a West Area DST (SY-102 is the preferred receiver) until the waste in all of the West Area SSTs have been retrieved and the wastes in the West Area DSTs have been transferred to an East Area DST. From that time until all the wastes are immobilized, the 222-S Laboratory wastes will be trucked to an East Area DST. Decontamination and decommissioning (D&D) of the 222-S facility will need to include treatment and disposal of D&D wastes, as the DST system will not be available for the receipt of D&D wastes.

### 4.3.14 Aging Waste Farm Condensates

Approximately 96 Kgal of waste is added to tank AY-101 annually in FYs 2007, 2008, and 2009 to account for the DST space needed to receive ventilation system condensates collected in vessel AZ-301.

***Basis:*** Evaporation from high heat aging tanks is substantial (e.g., tank AY-102 loses 10 inches per year). The aging waste system also has the capability to return primary vent condensates to the tanks. For the near term, the condensate vented is being routed to the AY-101 tank. Project E-525 will provide a way for the condensate to be routed long term. The project scope is to enable the condensate to be routed to either AY-101, AY-102, AZ-101 or AZ-102.

***Issue:*** Having the condensate routed to the LERF Plant is still under consideration and may happen in the future.

### 4.3.15 Common Use of Transfer Lines

There are no restrictions on the subsequent use of transfer lines based on waste types (HLW, LAW, TRU, and LLW) and chemistries.

***Basis:*** Transfer lines may be used for a variety of waste and are only limited by waste compatibility and corrosion specifications.

### 4.3.16 Waste Transfer Routes

Transfer system constraints are imposed through the near-term SST retrieval plans (3.3.2).

***Basis:*** Waste transfer routes within the HTWOS model are based on currently available routes or transfer capabilities, and on planned upgrades or modifications to the waste transfer system.

### 4.3.17 Waste Transfer Rates and Durations

Waste Transfer Rates are defined in Table 4-8:

**Table 4-8 Waste Transfer Rates.**

| Category | Rate or Duration |
|---|---|
| Cross-Site Supernatant | 50-60 gpm |
| Cross-Site Slurry | 100-120 gpm |
| SST Retrieval | Wastes retrieved from the SSTs will be retrieved at the capacity of the retrieval system as defined by the minimum durations when DST space is available. |
| DST to DST or to WTP (excluding cross-site transfers) | 140 gpm |
| Modeled Transfer Duration | Waste transfer durations will be calculated by dividing the total volume being transferred by the transfer rate. |
| Transfer System Set-Up | There is a five-day delay between subsequent uses of transfer routes having common components starting after the C-Farm retrievals have been completed, to account for the closeout of one transfer route and the establishment of another route. |

***Basis:*** The transfer rates are based on pump design and process experience. The minimum SST retrieval durations are defined in Table 3-3. Transfer system set-up delays are based on engineering judgment.

### 4.3.18 DST Residual Waste

At the end of the mission, the DST will be pumped out completely, leaving a residual waste volume of 100 gallons. The composition of the residual left in the DST will be the same as the last waste contained in the tank.

***Basis:*** At the end of the mission, the DST will be pumped out completely, leaving a residual waste volume of 100 gallons. The composition of the residual left in the DST will be the same as the last waste contained in the tank. The 100 gallon DST residual volume is a simplifying assumption that has been used in the HTWOS model since 1997, and is not based on any

evaluation of DST waste retrieval capability. Use of this value is not meant to imply that the end-of-mission DST retrievals are efficient enough to leave this small of a residual.

### 4.3.19 DST Upgrades for Feed Staging

The model assumes that the necessary equipment will be available in time to support all planned waste transfers.

***Basis:*** The DSTs will need a mixer pump, and, a decant/transfer pump (if solids entrainment is a concern) or a fixed intake transfer pump (if solids entrainment is not a problem). Solids retrieval equipment will be installed in AN-101 and AN-106 to move C-Farm solids into WTP waste feed staging tanks.

The following DSTs have been identified as requiring project work before use as feed staging tanks; AN-101, AN-102, AN-103, AN-104, AN-105, AN-107, AP-101, AP-102, AP-104, AW-101, AY-101, AY-102, AZ-101, and AZ-102

# 5.0 TANK FARM EVAPORATOR (242-A)

This section describes the activities associated with the 200E area evaporator (242-A Evaporator). These activities include concentration of dilute waste to support DST space management requirements for meeting waste feed delivery requirements.

## 5.1 242-A EVAPORATOR PROCESS DESCRIPTION

The 242-A Building is located in the 200 East Area, south of the 241-A and 241-AX Tank Farms and north of the 241-AW Tank Farm. The 242-A Evaporator facility is used to reduce the volume of waste solutions by concentrating the waste, and thus reduce the number of underground double-shell tanks required for waste storage.

The 242-A Evaporator employs a conventional forced-circulation, vacuum evaporation system to concentrate radioactive waste solutions. Principal process components of the evaporator system are located in the 242-A Building. They include the reboiler, vapor-liquid separator, recirculation pump and pipe loop, slurry product pump, condensers,, and vessel ventilation system.

The evaporator system receives a mixed blend feed from the feed tank 241-AW-102. The feed is pumped into the recirculation line and blended with the main product slurry stream, which flows to the reboiler via the recirculation pump (P-B-1). The mixture is heated in the reboiler. The vapor liquid separator is maintained at a pressure of 35 to 85 Torr (0.68 to 1.64 psia). Under this reduced pressure, a fraction of the water in the heated slurry flashes to steam and is drawn through two wire mesh deentrainer pads into a 42-inch vapor line that leads to the primary condenser (E-C-1). As evaporation takes place in the separator vessel, the slurry becomes concentrated. When the process solution has been concentrated to the parameters specified by the campaigns process memo, a fraction is withdrawn from the upper recirculation line, upstream of the feed addition point, and is either gravity drained or pumped by the slurry pump (P-B-2) to underground storage tanks.

Vapors removed from the vapor-liquid separator via the 42-inch vapor line are condensed and routed to the condensate collection tank (TK-C-100). The process condensate is discharged to the Liquid Effluent Retention Facility (LERF). Steam condensate is continuously monitored for excessive radiation, pH, and conductivity, and then discharged from the building to the 200 Area Treated Effluent Disposal Facility (TEDF).

Cooling water from the condensers, which is also continuously monitored for excessive radiation, pH, and conductivity, is also discharged to the 200 Area TEDF. This used cooling water stream cannot be diverted, thus, if contamination is detected, an evaporator shutdown is required.

Non-condensable vapors from the evaporator are filtered and discharged to the atmosphere via the vessel vent system. This system consists of a deentrainment pad, prefilter, heater, high-efficiency filter assembly, and vessel vent exhauster. The 242-A

stack is equipped with sampling, monitoring, and alarms to ensure the of-gas meets environmental and safety requirements.

## 5.2 242-A MODEL DESCRIPTION

The HTWOS model of the 242-A Evaporator consists of an evaporator-wvp and stack equipment class objects which simulates the operation of the 242-A Evaporator with a single procedure called the concentrator procedure. The 242-A evaporator and stack object are shown on the East area workspace (Figure D-1). The evaporator logic diagram from HTWOS is shown in Figure D-3. Discussion of the concentrator procedure core function is provided in 2.3.4. Tank AW-102 is used as the evaporator feed tank.

The model projects the need for operation of the 242-A Evaporator to concentrate wastes for storage in the DST system. The 242-A evaporator is modeled with two goals in mind:

1. Evaporate retrieved waste as needed to manage DST space until the WTP starts.
2. Evaporate retrieved waste as needed to concentrate dilute waste to meet the WTP LAW feed specification after the WTP starts.

The HTWOS model predicts the composition of concentrated waste by removing water until the desired specific gravity set point is reached. Recent issues with solids formation in the evaporator are handled as part of the historical transfer data.

The waste volume reduction (WVR) factor is calculated using Equation 5-1.

$$WVR = \frac{(\rho_B - \rho_F)}{(\rho_B - 1)} \qquad \textbf{Equation 5-1}$$

Where:

$\rho_B$ = Evaporator set point (bottoms SpG)

$\rho_F$ = Specific gravity of evaporator feed

The composition of process condensate from the 242-A Evaporator are estimated using the split factors calculated using Equation 5-2..

$$SF_i = \frac{1}{\left[1 + \frac{Kp_i}{21{,}579}\left(\frac{(-WVR)}{WVR}\right)\right]} \qquad \textbf{Equation 5-2}$$

Where:

$SF_i$ = split factor for component *i*; the split factor is the mass or activity of component *i* in the process condensate to the mass or activity of *i* in the feed

$WVR$ = waste volume reduction factor

$Kp_i$ = 242-A evaporator partition coefficients from HNF-14755, HNF-14755, 2007, *Documented Safety Analysis for the 242-A Evaporator* and RPP-17239, *Control Plan for 242-A Evaporator Campaign 401*; in the case of tritium and water the $Kp_i$ values are equal to the WVR because they partition equally with water. The partition coefficients are provided in Table A-1.

21,579 = a numerical factor accounting for the 15% volume increase and for the ratio of the volume of condensate as a vapor to the volume of condensate as a liquid evaluated at 60 torr and 52C

Equation 5-2 was derived from equations documented in RPP-17239 by equating concentrations and flow volumes to the WVR, the split factor, and the vapor to liquid volume ratio, and solving for the split factor. The partition coefficients used in the equation are given in the Table A-1 in Appendix A.

The condensate from the 242-A evaporator is transferred to the HWOS WTP Condensate/Stack Emissions workspace (Section 11.0).

The assumptions presented below in section 5.3 define the parameters and constraints used to model the 242-A evaporator.

## 5.3 242-A EVAPORATOR MODEL ASSUMPTIONS

### 5.3.1 Evaporator Availability

The 242-A Evaporator is assumed to be available through the full RPP mission. The 242-A Evaporator will be available, as needed, to support SST retrieval. The evaporator will not be available during the outages listed in Table 5-1.

Table 5-1 242-A Evaporator Outages

| Outage Purpose | Time Period of Outage |
|---|---|
| MCS Upgrades | 3/5/2008 – 10/27/2008 |
| HVAC Supply | 3/31/2008 – 11/20/2008 |
| HVAC Exhaust | 2/01/2009 – 10/30/2009 |
| Leak Detection (Trace Tek) | 5/19/2010 – 11/5/2010 |
| Repair Sanitary Drain,<br>Replace EC-1 Condensor,<br>Install Reboiler-Condensate System,<br>Install Manual Flush Valves-Dip Tubes,<br>Upgrade PB-2 Relief Valves,<br>Replace-Upgrade Flow Indicators,<br>Install Process Condensate Sampling Station,<br>and Install Control Valves | 2/4/2011 – 2/2/2012 |

Terms:

MCS = Master Control System
HVAC = heating, ventilating, and air conditioning

***Basis:*** The 242-A evaporator outages are based on estimates from Tank Farm Operations predictions and historical data.

### 5.3.2 Evaporator Feed Staging

Feed to the evaporator is staged in a DST for a minimum of 3 months before being evaporated.

***Basis:*** A 3-month period is allocated for the sampling and analysis of dilute feed staged in one or more DSTs and for preparation of the process control plan before that feed can be run through the evaporator. The 3 months is based on operational experience.

### 5.3.3 Evaporator Cold Runs

The volume of water evaporated to train personnel during cold runs is 82 Kgal if the evaporator has not been operated for 11 months. Each training run adds 50 Kgal of water to AW-102

***Basis:*** The period between evaporator campaigns must be kept to less than 12 months to maintain operator qualifications and avoid the need for a full readiness review. An eleven month period was chosen in the model to make sure training runs occurred within a 12 month period. The approximately 50 Kgal of water sent to AW-102 is from seal water (added during the run) and emptying the evaporator vessel after the training run.

### 5.3.4 Evaporator Bottoms Set-Point

Dilute waste will be concentrated unit it reaches a bulk concentration of 1.43 g/ml.

***Basis:*** The bottoms SpG set point of 1.43 represents a compromise between maximizing the waste volume reduction and minimizing waste chemistry issues during prolonged storage. The selection of a SpG set point for actual evaporator operations will be based on boil-down tests using samples of the waste feed.

***Issue:*** The operation of the evaporator depends on the chemistry of the waste being concentrated. Concentration of some waste to a specific gravity of 1.43 may result in solids precipitation. Accumulation of solids could result in the retention of flammable gases and the possibility of uncontrolled releases. An evaluation should be performed to develop a solids management strategy that would allow concentration to the point of precipitating solids and the distribution of those solids through the DST system in a way to avoid safety issues.

### 5.3.5 Maximum Evaporation Rate

When processing waste, the evaporator is assumed to run at the lesser of 50 gpm boil-off or 140 gpm feed.

***Basis:*** The model will try to operate the evaporator at the 140-gallon-per-minute feed rate unless it determines that concentration to the desired specific gravity generates enough condensate to exceed the condensate rate of 50 gpm. If this occurs, the model adjusts the feed rate down to a point where the desired specific gravity is reached and the boil-off is within the condensate rate.

### 5.3.6 Process Condensate Volume

The volume of the process condensate will be 1.15 times the waste volume reduction to account for the vacuum steam jets.

***Basis:*** The total evaporator condensate volume sent to the LERF is determined by multiplying the boil-off volume by a factor of 1.15. This factor accounts for water added by operation of the evaporator vent system steam jets. The composition of the process condensate from the 242-A Evaporator will be estimated using the split factors calculated using Equation 5-1 and the partition coefficients listed in Table A-1. Details of the split factor equation used for 242-A Evaporator are discussed in RPP-17239.

### 5.3.7 242-A Atmospheric Releases

The releases from the condenser to the atmosphere will be estimated using the split factors given in Table A-1.

***Basis:*** The contributions of the waste to the gaseous effluent stream are estimated by applying split factors (the reciprocal of decontamination factors) to the process condensate stream. The split factors are derived from decontamination factors that come from a condenser in the WTP evaporator model.

# 6.0 WTP PRETREATMENT

The Hanford Tank Waste Treatment and Immobilization Plant (WTP) contains three major waste-treatment process areas: Pretreatment (PT); Low-Activity Waste (LAW) vitrification; and High-Level Waste (HLW) vitrification. There is also a laboratory, as well as the Balance of Facilities (BOF). The PT process description, model description, and model assumptions are discussed below.

## 6.1 PRETREATMENT PROCESS DESCRIPTION

The Hanford tank farm contractor transfers waste from the waste tanks to the WTP's PT facility. LAW Envelopes A, B, and C are transferred to the WTP as solutions that contain some undissolved solids (LAW-precipitated salts). HLW undissolved solids (Envelope D) are transferred as a slurry to the PT facility. The WTP contract specifications for waste feed delivery are given in the DE-AC27-01RV14136, RL, 2000, *WTP Contract*, Specification 7 and 8. The LAW Pretreatment system consists of the following main waste processing systems which are summarized in the discussion below:

- LAW Feed Receipt Process (FRP),
- HLW Lag Storage and Feed Blending Process (HLP)
- Waste Feed Evaporation Process (FEP),
- Ultrafiltration Process (UFP),
- Cesium Ion Exchange (Cs-IX) System
- Treated LAW Evaporator Process (TLP)

The PT building also contains a process vessel ventilation system, an offgas treatment system, and a stack. Liquid effluents are either recycled back into the facility or sent to the Hanford Site liquid effluent retention facility (LERF)/200 Area effluent treatment facility (ETF).

### 6.1.1 LAW Feed Receipt Process (FRP)

The primary function of the LAW Feed Receipt Process (FRP) system is to receive LAW from DST farms and to supply this feed to downstream WTP processes. The FRP system can also provide lag storage capacity for intermediate pretreated LAW melter feed and process recycles. The waste feed receipt system consists of four waste receipt tanks. Each feed receipt vessel has a working volume of 375,800 gallons (1.5 Mgal total). Each vessel is equipped with pulse jet mixers (PJMs) to agitate the waste, and the tanks are connected for limited blending. Each vessel vapor space is purged to prevent hydrogen accumulation.

### 6.1.2 HLW Lag Storage and Feed Blending Process (HLP)

There are three purposes of the HLW lag storage and feed blending (HLP) system. The first is to receive HLW feed from DOE tank farms. The HLW, once transferred from DOE tank farms to the HLW feed receipt vessel, is supplied to the downstream WTP processes. The second is to receive and stage pretreated process slurries of HLW solids and Sr and TRU precipitates from

the UFP system. The third purpose is to mix intermediate product streams, such as Cs concentrate, with HLW slurries for subsequent vitrification. The HLP system, consists of four vessels. One vessel receives HLW feed from DOE, two receive treated solids from UFP, and one blends waste to be sent to HLW vitrification.

HLW will be transferred from DOE tank farms to HLW feed receipt vessel in batches up to 160,000 gallons. Normally, this feed will be transferred to the ultrafiltration feed preparation vessels. The HLW may also be routed to the FEP system. Prior to a HLW transfer from tank farms, a pre-transfer warming flush may be performed with heated water to mitigate the precipitation of salts. After the waste transfer is complete, the TFC will send a post-transfer pipeline flush of inhibited water (process water containing at least 0.01 M sodium hydroxide and 0.011 M sodium nitrite). Combined, the pre- and post-transfer flushes will not exceed three times the transfer pipeline volume and never more than 7,500 gallons.

The lag storage and feed blending portion of the HLP system receives HLW washed solid slurries from UFP, provides lag storage of treated HLW solids and Sr/TRU precipitated products, and mixes treated solids with Sr/TRU and Cs concentrate. The treated HLW solids, are blended together, sampled, and routed to the HLW Melter Feed Preparation Vessels (MFPV) of the HLW vitrification facility.

### 6.1.3 Waste Feed Evaporation Process (FEP)

The waste feed evaporation process (FEP) system reduces the volumetric throughput of the ultrafiltration process and downstream unit operations. The FEP system receives recycle streams from throughout the plant (and may also receive LAW or HLW feed from the feed receipt vessels), and concentrates them to approximately a 5 M sodium concentration, which will be controlled based on specific gravity. The design of the FEP system is similar to the 242-A evaporator being a continuous, forced-circulation, vacuum evaporator. The feed to the evaporators is pumped from two evaporator feed vessels. Each evaporator system consists of a separation vessel, recirculation pump and pipe loop, reboiler, slurry product pump, vacuum eductor system, primary condenser, intercondenser, and aftercondenser. The condensate from the condensers is collected in the condensate collection vessel.

Overheads from the evaporator are routed to the primary condenser, where most of the vapor is condensed at the saturation pressure. A two-stage steam eductor system maintains a vacuum in the evaporator. Vapor from the steam eductors is condensed in an intercondenser and aftercondenser. Non-condensable gases from the aftercondenser enter the pretreatment vessel vent system.

The condensate from the condensers is routed to the process condensate vessel. Most of the condensate is then transferred to the radioactive liquid waste disposal system where the solution is recycled for use in the WTP process, or excess condensate transferred to LERF/ETF. Some of the evaporator process condensate is filtered and routed to the deentrainment section of the evaporator separator. If activity of the condensate is above specifications, the contaminated condensate is recycled to the evaporator feed vessel. The concentrated bottoms stream is collected for transfer to the ultrafiltration-system makeup tanks.

### 6.1.4 Ultrafiltration Process (UFP)

When the sodium concentration is acceptable for further processing (either as received or after evaporation), the wastes are processed through the Ultrafiltration Process (UFP) as follows:

- LAW Envelopes A or B feeds are blended with HLW feeds (Envelope D) in an ultrafilter preparation tank. The ratio of LAW to HLW undissolved solids is established to support both LAW and HLW glass production rates. The blended HLW and LAW feed streams are filtered to separate the LAW liquid stream (permeate) from the slurry. The LAW permeate then is processed through the ion exchange (IX) processes discussed below. The concentrated solids slurry is caustic leached (if warranted), washed, oxidative leached (if warranted), washed, and blended with Cs concentrate from ion exchange and Sr/TRU solids from $^{90}$Sr/TRU precipitation (see below) before being transferred to the HLW vitrification facility.
- Envelope C feeds contain organic complexants that cause the Sr and some TRU waste to remain in solution. This waste undergoes a $^{90}$Sr/TRU precipitation process before filtration. The filtration step then separates the $^{90}$Sr/TRU solids, manganese oxide solids (a byproduct from the precipitation process) and entrained solids from permeate (LAW stream). The $^{90}$Sr/TRU precipitate is washed and stored for blending with HLW feed before HLW vitrification. The $^{90}$Sr/TRU precipitate is not caustic leached. Envelope C permeates are processed through the IX process.

### 6.1.5 Cesium Ion Exchange (Cs-IX) System

After filtration, the permeate undergoes IX to remove $^{137}$Cs. The purpose of the cesium ion exchange (Cs-IX) system is to remove cesium-137 and cesium-134 that is in the solution. Because cesium is soluble, it cannot be removed by ultrafiltration and an ion exchange process is used. These elements need to be removed to meet LAW vitrification shielding and glass product requirements. The 137Cs eluate is concentrated by evaporation, and then blended with pretreated HLW solids before transfer to the HLW vitrification process.

The four columns of the Cs-IX system operate in a carousel arrangement. One of the columns is the "lead" column, one is the "lag" column, one is the "polishing" column, and the last is the "regenerating" column. The columns operate in cycles. Once a cycle is completed, the lead column becomes the regenerating column, the lag column becomes the lead column, the polishing column becomes the lag column, and the regenerating column becomes the polishing column. If a column in regeneration takes longer to complete its cycle than the lead column takes to complete its cycle, then the lead column will go into a regeneration cycle and there will be two columns in regeneration mode. The lag column will not become the lead

After a column has gone through the regeneration process 10 times, the resin must be changed out in two steps. In the first step, 7500 gallons of resin transfer solution is used to flush the spent resin out of the regenerating column. The spent resin, along with 7085 gallons of transfer solution, is pumped to the radioactive liquid disposal system. In the second step, 1,146 gallons of fresh resin transfer solution is pumped through the regenerating column. The fresh resin is deposited in the column while the transfer solution is sent to the radioactive liquid disposal system.

The $^{137}$Cs eluate is concentrated by, and then blended with pretreated HLW solids before transfer to the HLW vitrification process.

### 6.1.6 Treated LAW Evaporator Process (TLP)

The last step in the PT facility is to concentrate the treated LAW liquid by evaporation before transferring the waste to the LAW vitrification process. The TLP evaporator is similar to the FEP except the waste is concentrated to 8 M Na for preparation for LAW virification.

## 6.2 PRETREATMENT MODEL DESCRIPTION

The HTWOS model of the WTP Pretreatment is a simplified flowsheet based on splits and extent of reactions. Figure D-5 shows the HTWOS WTP Pretreatment workspace which includes:

- One LAW feed receipt tank (HTWOS-LAW-FEED).
- One HLW feed receipt tank (HTWOS-HLW-FEED),
- A waste feed evaporator (HTWOS-V11002) for concentrating feed with an associated overheads condenser (HTWOS-V41001-CONDENSER), bottoms collection tank (HTWOS-V12010), and a condenser makeup air feed (HTWOS-V11002-CONDENSER-AIR).
- Two ultrafiltration lines (A and B), each line consisting of a feed makeup and feed vessel (HTWOS-V12011A and HTWOS-V12011B), an ultrafilter, and a permeate collection vessel (NEW-HTWOS-V12015A and NEW-HTWOS-V12015B).
- A cesium (Cs) ion exchange (IX) system feed tank (CS-IX-FEED), a Cs IX bed (HTWOS-CS-IX), a pretreated LAW feed collection tank (HTWOS-V43110), and a spent resin collection tank (HTWOS-SPENT-RESIN).
- A treated LAW evaporator (HTWOS-V41011) for concentrating the pretreated LAW stream with its associated condenser (HTWOS-V41011-CONDENSER) and a condenser makeup air feed (HTWOS-V11002-CONDENSER-AIR).

Table B-3 gives vessel volumes and other parameters of the HTWOS PT modeled vessels/unit operations. The HTWOS Model pretreatment process interfaces with the DST system, the LAW Melter, HLW Melter, and the LERF/ETF processes.

.

### 6.2.1 LAW Feed Receipt Model Description

The multiple LAW waste feed receipt tanks of the WTP system are simulated as a single mixer object HTWOS-LAW-FEED with the following paramaeters.

**Table 6-1 HTWOS-LAW-FEED Parameters**

| HTWOS-LAW-FEED | volume |
|---|---|
| Maximum Capacity | 3 Mgal |
| Minimum Volume | 200 gal |
| Pump flow | 70 gpm |

The LAW feed receipt tank is operated so that the WTP can receive 1 Mgal batches of LAW from the DST system without interruption while continuing to feed the LAW pretreatment processes out of 0.5 Mgal of LAW feed in the tank.

The HTWOS-LAW-FEED receives waste from DSTs in batches via the WTP batch feed source logic block which supplies feed based on waste feed delivery assumptions and model priorities. Process condensate recycles from the HLW melter off gas system is also received in HTWOS-LAW-FEED via the HTWOS System PT 550 Effluent Collection system (Section 11.0). The LAW (liquid) fraction of Envelope C waste from tanks AN-102 and AN-107 does not need to be segregated from other waste within the pretreatment facility since it will be pretreated in tank farms prior to delivery to WTP.

LAW feed specifications are not applied as a constraint in the HTWOS model, but are used as part of the analysis of results from the model.

### 6.2.2 HLW Feed Receipt Model Description

The four HLW lag storage and blending vessels are modeled as a single mixer object HTWOS HLW-FEED with the following parameters.

**Table 6-2 HTWOS-HLW-FEED Parameters**

| HTWOS-HLW-FEED | volume |
|---|---|
| Maximum Capacity | 3 Mgal |
| Minimum Volume | 200 gal |
| Pump flow | 50 gpm |

Feed designated as HLW is transferred from DST farms to HTWOS HLW-FEED in batches of up to 160,000 gallons. The volumes can be decreased to accommodate delivery of smaller volume batches, such as delivering all the waste from a source tank, or when cleaning out the DSTs at the end of the mission. HLW deliveries are modeled in batches ranging in volume from 130,000 to 160,000 gallons and containing between 10 and 200 grams of solids per liter of feed slurry. The simplified model will also assume that transfers of LAW and HLW feed from the DOE will not take place simultaneously. These rates can be decreased to accommodate delivery of smaller volume batches, such as delivering all the waste from a source tank, or when cleaning out the DSTs at the end of the mission. Transfers of HLW feed from the DOE will include a flush volume of 5,000 gal. The model also delivers LAW feed as the carrier liquid in the HLW feed delivery batches.

As a simplifying assumption, the model will assume that all entrained solids from the ultrafiltration process will be routed to the HLW receipt vessel.

Normally, the HLW feed will be transferred to the ultrafiltration feed preparation vessels. The HLW may also be routed to the waste feed evaporator system if the sodium molarity is less than 5 M. Neutralized condensate from the HLW off gas system may also be transferred to HTWOS-HLW-FEED as recycles for interim storage and blending via the HTWOS System PT 550 Effluent Collection system (Section 11.0.0).

### 6.2.3 Feed Evaporator Model Description

The FEP system consist of a split-evaporator (HTWOS-V11002) for concentrating feed with an associated evaporator-condneser-tank (HTWOS-V41001-CONDENSER), bottoms collection tank (HTWOS-V12010), and condenser makeup air feed (HTWOS-V11002-CONDENSER-AIR).

The following streams may be received into the evaporation system:

- LAW feed from the LAW feed receipt vessels.
- HLW feed from the HLW feed receipt vessel.
- Neutralized HLW SBS condensate (via PT550).
- Evaporator concentrate recycled from the ultrafiltration system (via PT550).

The primary purpose of the evaporator is to concentrate the waste and recycles to a sodium concentration of 5 M. The vapor stream is condensed with the condensed liquid stream being routed to the Liquid Effluent Retention Facility (LERF) and the non-condensable stream (containing entrained radionuclides or chemicals) being routed to the WTP pretreatment stack.

The LAW Feed Evaporator Feed Vessels (HTWOS_LAW_FEED and HTWOS-HLW-FEED) alternate operations, while one vessel is filling the other one is emptying. The evaporator operates continuously in order to produce a product of specific sodium molarity (i.e. 5M), but the feed and discharge to the evaporator vessel is batch wise. The bottoms product from the evaporator passes on to a bottoms collection tank (HTWOS-V12010). The offgas from the evaporator is routed to a condenser (HTWOS-V41001-CONDENSER). The condensate is sent to the LERF. The offgas that is not condensed is sent to the WTP Stack.

Evaporator feed is boiled-off at a maximum rate of 56 gpm and a maximum feed rate of 75 gpm. The evaporator concentrates the waste to an ending SpG of 1.25 which correlates to 5 M Na. Constituents are boiled off by the evaporator based on splits found in Table A-2.

### 6.2.4 Ultrafiltration Model Description

The Ultrafiltration Process (UFP) is modeled as two identical Ultrafiltration vessels HTWOS-V12011A/B with water and chemical additions, and two permeate collection vessels NEW-HTWOS-V12015A/B. The ultrafiltration vessels are each a mixer-6-output model object with the following parameters:

**Table 6-3UFP Model Vessel Parameters**

| **HTWOS-V12011A/B Ultrafilters/UFP Feed Vessel** | **volume** |
|---|---|
| Maximum Capacity | 27,125 gal. |
| Minimum Volume | 15,800 gal |
| Pump flow | 16.4 gpm |
| **NEW-HTWOS-V12015A/B Permeate Collection** | |
| Maximum Capacity | 27,420 gal. |
| Minimum Volume | 1,665 gal. |
| Pump flow | 70 gpm |

Each HTWOS-V12011A/B has an associated permeate collection vessel NEW-HTWOS-V12015A/B. Solids are transferred from the ultrafilters (HTWOS-V12011A/B) to the HLW melter feed tank V12007.

When one of the ultrafiltration vessel (V120111A/B) is filled with an Envelop A, B, or D waste, from the evaporator bottoms vessel HTWOS-V12010, the feed is circulated through the ultrafilter and liquid is removed at a maximum permeate rate of 17.7 gallons per minute (gpm) until the solid concentration reaches 20 wt%.

If feed is designated as Envelope C, it is circulated through the ultrafilter and liquid is removed at the maximum permeate rate of 17.7 gallons per minute (gpm) until the solid concentration reaches 15 wt%. $NaMnO_4$ is added to the feed tank to perform a permanganate strike to break down organic complexants. Non-radioactive strontium is added as strontium nitrate to dilute the amount of radioactive strontium held by organic complexants not broken down by the permanganate.

All solids delivered into the UFP system are caustic leached. Caustic leaching is accomplished by adding a solution of sodium hydroxide (caustic) to HLW slurry in the ultrafiltration tank and "cooking" at an elevated temperature to dissolve Al and other components. Sufficient caustic is added to the ultrafiltration system feed tank to result in a final hydroxide concentration of 3 M after the caustic leaching step, in which step the caustic leach reactions are applied. Eight hours after the caustic was added, enough liquid is decanted (and pumped through the ultrafilter) to result in an average solid concentration of 20 wt%. The model checks the Cr concentration and if the Cr concentration in the leached solids is greater than 5,000 μg Cr per gram of dry solids, the model adds $NaMnO_4$ and applies the oxidative leaching reactions to remove Cr down to 5,000 μg Cr per gram of dry solids. Water is then added in 5,000 gallon batches to wash the solids. After each wash addition the solids are settled and enough liquid is decanted to reach 20 wt% solids. The washing is repeated until the permeate tank is full, which typically occurs after four washes. After all the washing has been completed, the washed solids are transferred to the HLW melter facility and waste and acid are added to the makeup and feed tank to wash the ultrafilters. The transfer of feed to the two ultrafiltration lines is managed so that one makeup and feed tank is filling while the waste in the other tank is being pretreated.

The ultrafiltration system permeate is transferred to the intermediate permeate collection vessel (NEW-HTWOS-V12015A/B) prior to transfer to the cesium ion exchange feed tank.

The reactions and extent of reactions for the HTWOS UFP system are presented in Table 6-4 UFP Reactions.

**Table 6-4 UFP Reactions**

| Reaction Name | Reaction Stoichiometry | Extent of Reaction |
|---|---|---|
| | | |
| NEUT-REACTION | 1.0 H+(l) + 1.0 OH-(l) --> 1.0 H2O(l) | 1 |
| OHBOUND-REACTION | 1.0 OH(BOUND)(l) --> 1.0 OH-(l) | 1 |
| | | |
| **Feed Makeup Tank** | | |
| V12011-MN-1 | 1.0 C2O4-2(l) + 1.0 MnO4-(l) --> 1.0 MnO2(s) + 2.0 CO3-2(l) | 1 |
| V12011-MN-2 | 1.0 C2H3O2-(l) + 1.75 O2(g) + 1.0 MnO4-(l) --> 1.0 MnO2(s) + 2.0 CO3-2(l) + 1.5 H2O(l) | 1 |
| V12011-MN-3 | 1.0 CHO2-(l) + 1.0 MnO4-(l) --> 1.0 MnO2(s) + 1.0 CO3-2(l) + 0.5 H2O(l) + 0.25 O2(g) | 1 |
| V12011-MN-4 | 1.0 C2H3O3-(l) + 1.25 O2(g) + 1.0 MnO4-(l) --> 1.0 MnO2(s) + 2.0 CO3-2(l) + 1.5 H2O(l) | 1 |
| V12011-MN-5 | 1.0 C10H12N2O8-4(l) + 16.0 O2(g) + 1.0 MnO4-(l) --> 1.0 MnO2(s) + 10.0 CO3-2(l) + 2.0 NO3-(l) + 6.0 H2O(l) | 1 |
| V12011-MN-6 | 1.0 C10H15N2O7-3(l) + 17.25 O2(g) + 1.0 MnO4-(l) --> 1.0 MnO2(s) + 10.0 CO3-2(l) + 2.0 NO3-(l) + 7.5 H2O(l) | 1 |
| V12011-MN-7 | 1.0 C6H6(l) + 9.5 O2(g) + 1.0 MnO4-(l) --> 1.0 MnO2(s) + 6.0 CO3-2(l) + 3.0 H2O(l) | 1 |
| V12011-MN-8 | 1.0 C6H5NO2(l) + 9.75 O2(g) + 1.0 MnO4-(l) --> 1.0 MnO2(s) + 6.0 CO3-2(l) + 1.0 NO3-(l) + 2.5 H2O(l) | 1 |
| V12011-MN-REACTION | 9.0 MnO4-(l) + 0.5 TOC(l) --> 9.0 MnO2(s) + 5.0 CO3-2(l) + 1.0 NO3-(l) + 4.0 H2O(l) | 1 |
| V12011-OH1-REACTION | 1.0 241-Am(l) + 3.0 OH-(l) --> 1.0 241-Am(s) + 3.0 OH-(s) | 0.94 |
| V12011-OH2-REACTION | 1.0 243-Am(l) + 3.0 OH-(l) --> 1.0 243-Am(s) + 3.0 OH-(s) | 0.94 |
| V12011-OH3-REACTION | 1.0 Pu+4(l) + 4.0 OH-(l) --> 1.0 Pu+4(s) + 4.0 OH-(s) | 0.5 |
| V12011-OH4-REACTION | 1.0 239-Pu(l) + 4.0 OH-(l) --> 1.0 239-Pu(s) + 4.0 OH-(s) | 0.5 |
| V12011-OH5-REACTION | 1.0 240-Pu(l) + 4.0 OH-(l) --> 1.0 240-Pu(s) + 4.0 OH-(s) | 0.5 |
| V12011-OH6-REACTION | 1.0 241-Pu(l) + 4.0 OH-(l) --> 1.0 241-Pu(s) + 4.0 OH-(s) | 0.5 |
| V12011-OH7-REACTION | 1.0 242-Pu(l) + 4.0 OH-(l) --> 1.0 242-Pu(s) + 4.0 OH-(s) | 0.5 |
| V12011-OH8-REACTION | 1.0 242-Cm(l) + 3.0 OH-(l) --> 1.0 242-Cm(s) + 3.0 OH-(s) | 0.5 |
| V12011-OH9-REACTION | 1.0 243-Cm(l) + 3.0 OH-(l) --> 1.0 243-Cm(s) + 3.0 OH-(s) | 0.5 |
| V12011-OH10-REACTION | 1.0 244-Cm(l) + 3.0 OH-(l) --> 1.0 244-Cm(s) + 3.0 OH-(s) | 0.5 |
| V12011-SR1-REACTION | 1.0 Sr+2(l) + 1.0 CO3-2(l) --> 1.0 Sr+2(s) + 1.0 CO3-2(s) | 0.9 |
| V12011-SR2-REACTION | 1.0 90-Sr(l) + 1.0 CO3-2(l) --> 1.0 90-Sr(s) + 1.0 CO3-2(s) | 0.9 |
| **Caustic-Oxidative Leach and Water Wash** | | |
| 101B-R1 | 1.0 Al+3(s) + 3.0 OH(BOUND)(s) + 1.0 OH-(l) --> 1.0 Al(OH)4-(l) | 0.861 |
| 101B-R11 | 1.0 Fe+3(s) + 3.0 OH-(l) --> 1.0 Fe+3(l) + 3.0 OH-(l) | 0.007 |
| 101B-R12 | 1.0 Si+4(s) + 4.0 OH-(l) --> 1.0 Si+4(l) + 4.0 OH-(l) | 0.347 |

**Table 6-4 UFP Reactions**

| Reaction Name | Reaction Stoichiometry | Extent of Reaction |
|---|---|---|
| | | |
| 101B-R13 | 1.0 U(TOTAL)(s) + 2.0 OH-(l) --> 1.0 U(TOTAL)(l) + 2.0 OH-(l) | 0 |
| 101B-R13-232 | 1.0 232-U(s) + 2.0 OH-(l) --> 1.0 232-U(l) + 2.0 OH-(l) | 0.02 |
| 101B-R13-233 | 1.0 233-U(s) + 2.0 OH-(l) --> 1.0 233-U(l) + 2.0 OH-(l) | 0.02 |
| 101B-R13-234 | 1.0 234-U(s) + 2.0 OH-(l) --> 1.0 234-U(l) + 2.0 OH-(l) | 0.02 |
| 101B-R13-235 | 1.0 235-U(s) + 2.0 OH-(l) --> 1.0 235-U(l) + 2.0 OH-(l) | 0.02 |
| 101B-R13-236 | 1.0 236-U(s) + 2.0 OH-(l) --> 1.0 236-U(l) + 2.0 OH-(l) | 0.02 |
| 101B-R13-238 | 1.0 238-U(s) + 2.0 OH-(l) --> 1.0 238-U(l) + 2.0 OH-(l) | 0.02 |
| 101B-R14 | 1.0 SO4-2(s) + 2.0 Na+(s) --> 1.0 SO4-2(l) + 2.0 Na+(l) | 0.241 |
| 101B-R2 | 1.0 Al+3(s) + 3.0 NO3-(s) + 4.0 OH-(l) --> 1.0 Al(OH)4-(l) + 3.0 NO3-(l) | 0 |
| 101B-R3 | 1.0 Al+3(s) + 3.0 NO2-(s) + 4.0 OH-(l) --> 1.0 Al(OH)4-(l) + 3.0 NO2-(l) | 0 |
| 101B-R4 | 2.0 Al+3(s) + 3.0 CO3-2(s) + 8.0 OH-(l) --> 2.0 Al(OH)4-(l) + 3.0 CO3-2(l) | 0 |
| 101B-R5 | 2.0 Al+3(s) + 3.0 SO4-2(s) + 8.0 OH-(l) --> 2.0 Al(OH)4-(l) + 3.0 SO4-2(l) | 0 |
| 101B-R6 | 1.0 Al+3(s) + 1.0 PO4-3(s) + 4.0 OH-(l) --> 1.0 Al(OH)4-(l) + 1.0 PO4-3(l) | 0 |
| 101B-R7 | 1.0 Al+3(s) + 4.0 OH-(l) --> 1.0 Al(OH)4-(l) | 0 |
| 101B-R8 | 1.0 Bi+3(s) + 3.0 OH-(l) --> 1.0 Bi+3(l) + 3.0 OH-(l) | 0.003 |
| 101B-R9 | 1.0 Ca+2(s) + 2.0 OH-(l) --> 1.0 Ca+2(l) + 2.0 OH-(l) | 0.03 |
| 101C-R1 | 1.0 Cr(TOTAL)(s) + 3.0 OH(BOUND)(s) + 1.0 OH-(l) --> 1.0 Cr(OH)4-(l) | 0.216 |
| 101C-R10 | 1.0 PO4-3(s) + 3.0 OH-(l) --> 1.0 PO4-3(l) + 3.0 OH-(l) | 0.692 |
| 101C-R11 | 1.0 Na+(s) + 1.0 OH-(l) --> 1.0 Na+(l) + 1.0 OH-(l) | 0.458 |
| 101C-R12 | 1.0 Al+3(l) + 4.0 OH(BOUND)(s) --> 1.0 Al(OH)4-(l) | 1 |
| 101C-R13 | 1.0 Cr(TOTAL)(l) + 4.0 OH(BOUND)(s) --> 1.0 Cr(OH)4-(l) | 1 |
| 101C-R2 | 1.0 Cr(TOTAL)(s) + 3.0 NO3-(s) + 4.0 OH-(l) --> 1.0 Cr(OH)4-(l) + 3.0 NO3-(l) | 0 |
| 101C-R3 | 1.0 Cr(TOTAL)(s) + 3.0 NO2-(s) + 4.0 OH-(l) --> 1.0 Cr(OH)4-(l) + 3.0 NO2-(l) | 0 |
| 101C-R4 | 2.0 Cr(TOTAL)(s) + 3.0 CO3-2(s) + 8.0 OH-(l) --> 2.0 Cr(OH)4-(l) + 3.0 CO3-2(l) | 0 |
| 101C-R5 | 2.0 Cr(TOTAL)(s) + 3.0 SO4-2(s) + 8.0 OH-(l) --> 2.0 Cr(OH)4-(l) + 3.0 SO4-2(l) | 0 |
| 101C-R6 | 1.0 Cr(TOTAL)(s) + 1.0 PO4-3(s) + 4.0 OH-(l) --> 1.0 Cr(OH)4-(l) + 1.0 PO4-3(l) | 0 |
| 101C-R7 | 1.0 Cr(TOTAL)(s) + 4.0 OH-(l) --> 1.0 Cr(OH)4-(l) | 0 |
| 101C-R8 | 1.0 Al+3(l) + 4.0 OH(BOUND)(l) --> 1.0 Al(OH)4-(l) | 1 |
| 101C-R9 | 1.0 Cr(TOTAL)(l) + 4.0 OH(BOUND)(l) --> 1.0 Cr(OH)4-(l) | 1 |

### 6.2.5 Cesium ion Exchange Model Description

The Cesium Ion Exchange Process System (CXP) in HTWOS consists of the following components.

**Table 6-5 Cs-Ion Exchange Components**

| Model Tag | Description | Object Type | Max. Volume | Min. Volume | Pump Flow |
|---|---|---|---|---|---|
| CS-IX-FEED-TANK | Cs-Ion Exchange Feed Tank | Mixer | 58,722 gal. | 0 gal. | 21.3 gpm |
| HTWOS-CS-IX | Cs-Ion Exchange Columns | f-split-3 | NA | NA | NA |
| HTWOS-SPENT-RESIN | Spent Resin Collection Vessel | Mixer | $1.0 \times 10^5$ gal. | 0 gal. | 0 |

The permeate from the ultra-filters is fed from NEW-HTWOS-V12015A/B to the Cs-IX-FEED-TANK which is sent to the HTWOS-CS-IX, where 98.98% of the 134-Cs, 137-Cs, and the 137m-Ba are removed. The HTWOS-CS-IX splits the waste three ways; the Cs product is sent to the HLW Feed Preparation tank V12007, some is spilt off to represent the spent resin, and the remaining waste is sent to the Treated LAW Collection vessel. For every 300,000 gallons of supernatant processed through the Cs-IX-FEED-TANK, 300 gallons of spent resin is generated in HTWOS-SPENT-RESIN collection vessel. The composition of the spent resin is given in Table A-2 of RPP-RPT-33214.

### 6.2.6 Treated LAW Evaporator Process (TLP) Model Description

The HTWOS TLP system is comprised of a treated LAW evaporator (HTWOS-V41011) for concentrating the pretreated LAW stream with its associated condenser (HTWOS-V41011-CONDENSER) and a condenser makeup air feed (HTWOS-V11002-CONDENSER-AIR).

The waste received from the CXP into the Treated LAW Collection Vessel, HTWOS-V43110 is mixed with recycle from the LAW SBS and WESP condensate (from HTWOS-V45009). The mixed waste is transferred to the TLP evaporator unit (HTWOS-V41011) where the waste is concentrated to 8 M Na and a SpG of 1.4. The evaporator operates at a maximum boil-off rate of 100 gpm and a maximum feed rate of 75 gpm. Constituents are boiled off by the evaporator based on splits are applied per Table A-2.

The bottoms product from the evaporator is passed onto the Treated LAW Concentrate Storage Vessel, HTWOS-V21001 (described in the LAW Melter Section). The offgas from the evaporator is routed to a condenser (HTWOS-V41011-CONDENSER). The condensate is sent to the LERF via the HTWOS WTP Condensate/Stack Emissions sytem (Section 11.0.0). The offgas that is not condensed is sent to the WTP Stack.

## 6.3 WTP WASTE FEED ASSUMPTIONS

The following section describes the waste feed assumption for the feed delivered from DST to WTP.

### 6.3.1 LAW Hot Commissioning and Ramp-Up

Feed delivery shall follow the schedule in Table 6-6, delivery starts with the first LAW feed batch on 5/1/2018 and deliver remaining LAW feed as needed to keep the WTP operating within model constraints. The first LAW feed batch will be provided by a decant transfer of about 131 Kgal of supernate from AY-102 to the LAW feed receipt tanks.

**Table 6-6. Low-Activity Waste Processing Schedule Dates for the Waste Treatment and Immobilization Plant.**

| Processing Activity | Start Date | End Date | Rate or Capacity |
|---|---|---|---|
| LAW Pretreatment | 12/1/2014 | end of mission | Support the down-stream demand for pretreated LAW up to a maximum UF permeate rate of 15.6 gpm. |
| LAW Vitrification | 5/15/2018 | 9/30/2018 | 8.74[1] MTG/d |
| | 10/1/2018 | 12/31/2019 | 9.0 MTG/d |
| | 1/1/2020 | 12/30/2020 | 18.0 MTG/d |
| | 1/1/2021 | End of Mission | 21.0 MTG/d |

[1] The melter rate stated for the Hot Commissioning period is the average rate that produces 188 immobilized low-activity waste packages during hot commissioning

LAW = low-activity waste

MTG/d = metric tons of glass per day

UF = ultra-filtration

***Basis:*** Tank AY-102 was selected as the feed for hot commissioning the WTP. After delivery of waste from AY-102, the model will choose the LAW feed delivery sequence for the remainder of the mission based on the availability of feed, in consideration of DST space management, and in response to other modeling assumptions or logic. The net rate is the realized capacity and is obtained by multiplying the design capacity (30 MTG/d) times a total operation efficiency (TOE). The TOE for the WTP LAW melter at full capacity is 70%. The melter rate stated for the Hot Commissioning period is the average rate that produces 188 immobilized low-activity waste packages during hot commissioning. The ramp up for LAW Vitrification is based on ORP-22339, *River Protection Project Low-Activity Waste Supplemental Treatment Technologies Report*.

### 6.3.2 HLW Hot Commissioning and Ramp-Up

Start delivery of the first batch group of HLW feed on 5/15/2018 and deliver remaining HLW feed as needed to keep the WTP operating within model constraints. For hot commissioning about 90% of the insoluble solids in AY-102 will be delivered to WTP, adding water as needed to mobilize the solids and dilute the feed to meet WTP contract feed specifications. The HLW vitrification will proceed according to the schedule in Table 6-7.

**Table 6-7. HLW Waste Processing Schedule Dates for the Waste Treatment and Immobilization Plant.**

| Processing Activity | Start Date | End Date | Rate or Capacity |
|---|---|---|---|
| HLW Vitrification | 5/15/2018 | 9/30/2018 | 1.44[1] MTG/d |
| | 10/1/2018 | 12/31/2019 | 3.0 MTG/d |
| | 1/1/2020 | 12/31/2020 | 4.0 MTG/d |
| | 1/1/2021 | 2/5/2024 | 4.2[2] MTG/d |
| | 2/6/2024 | End of mission | 5.25[3] |

[1] The 1.3 MTG/d melter rate was calculated as the average rate needed to produce 56 IHLW canisters during hot commissioning of the HLW melter. This may be increased by the modeler if necessary to produce 56 IHLW canisters during hot commissioning.

[2] Assumes two HLW melters, each 3 MTG/day design at a 0.7 TOE.

[3] Assumes two second-generation HLW melters, each 3.75 MTG/day design at a 0.70 TOE.

***Basis:*** The first batch group of HLW feed will be provided from AY-102 using existing supernate or by adding sufficient water to the decanted solids to obtain a slurry solids loading between 10 and 200 grams solids per liter of slurry (150 g/liter nominal). The initial HLW melter rate was calculated as the average rate needed to produce 56 canisters of immobilized high-level waste (glass) during Hot Commissioning. This may be increased by the modeler if necessary to produce 56 IHLW canisters during hot commissioning. The 4.2 MTG/d assumes two HLW melters, each with 3 MTG/day design at 0.7 TOE. The 5.25 MTG/day assumes two second-generation HLW melters, each with 3.75 MTG/day design at a 0.70 TOE. The basis for the TOE is 24590-HLW-RPT-PT-02-001, Rev. 0, *High Level Waste Facility Operations Research Availability Assessment*. The basis for the nameplate is the goal stated in Table C.6-5.1 of Standard 5 of the BNI Contract (DE-AC27-01RV14136).

### 6.3.3 LAW Feed Delivery Sequence

Provide available feed from the DST system as needed to keep the LAW and HLW processes in the WTP operating. Try to deliver the waste in tank AN-104 early in the sequence to free up AN-104 for use as the cross-site slurry receiver.

***Issue:*** The ratio of LAW Na to HLW solids needs to be balanced to avoid bottlenecking either the LAW or the HLW pretreatment and melter operations. The processing of an unbalanced feed

can cause short-term outages in one process or the other and increase the time required to process the delivered waste through the WTP.

### 6.3.4 LAW Feed Specifications

BNI contract Specification 7 will be used to assess envelope compliance.

***Discussion:*** LAW feed specifications are not applied as a constraint in the HTWOS model, but are used as part of the analysis of results from the model. The Na concentration in the LAW feed can range from 4 to 10 M for feed designated as Envelope A, B, or C; from 2 to 5 M for supernatant liquids in the initial deliveries from tanks AZ-101 and AZ-102; and from 0.1 to 10 for the liquids used to deliver the HLW solids. The LAW feed may contain up to 3.8 wt% solids. The maximum Cs concentration equivalent in the Envelope A, B, and C feeds is 1.2 Ci per liter and 3.0 Ci per liter for the liquids in the initial deliveries from AZ-101 and AZ-102. Two contract specification tables providing waste composition limits are reproduced in Table 6-8 and Table 6-9. A waste that complies with Envelope A is always designated Envelope A even though it could also be designated Envelope B or C.

The LAW feed source tanks do not have an organic layer that requires removal before the waste is delivered to the WTP.

**Table 6-8 WTP Contract Specification Table TS-7.1, Low-Activity Waste Chemical Composition, Soluble Fraction Only.**

| Chemical Analyte | Maximum Ratio, Analyte (mole) to Sodium (mole) | | |
|---|---|---|---|
| | Envelope A | Envelope B | Envelope C |
| Al | 2.5E-01 | 2.5E-01 | 2.5E-01 |
| Ba | 1.0E-04 | 1.0E-04 | 1.0E-04 |
| Ca | 4.0E-02 | 4.0E-02 | 4.0E-02 |
| Cd | 4.0E-03 | 4.0E-03 | 4.0E-03 |
| Cl | 3.7E-02 | 8.9E-02 | 3.7E-02 |
| Cr | 6.9E-03 | 2.0E-02 | 6.9E-03 |
| F | 9.1E-02 | 2.0E-01 | 9.1E-02 |
| Fe | 1.0E-02 | 1.0E-02 | 1.0E-02 |
| Hg | 1.4E-05 | 1.4E-05 | 1.4E-05 |
| K | 1.8E-01 | 1.8E-01 | 1.8E-01 |
| La | 8.3E-05 | 8.3E-05 | 8.3E-05 |

**Table 6-8 WTP Contract Specification Table TS-7.1, Low-Activity Waste Chemical Composition, Soluble Fraction Only.**

| Chemical Analyte | Maximum Ratio, Analyte (mole) to Sodium (mole) | | |
|---|---|---|---|
| Ni | 3.0E-03 | 3.0E-03 | 3.0E-03 |
| $NO_2$ | 3.8E-01 | 3.8E-01 | 3.8E-01 |
| $NO_3$ | 8.0E-01 | 8.0E-01 | 8.0E-01 |
| Pb | 6.8E-04 | 6.8E-04 | 6.8E-04 |
| $PO_4$ | 3.8E-02 | 1.3E-01 | 3.8E-02 |
| $SO_4$ | 1.0E-02 | 7.0E-02 | 2.0E-02 |
| TIC[1] | 3.0E-01 | 3.0E-01 | 3.0E-01 |
| TOC[2] | 5.0E-01 | 5.0E-01 | 5.0E-01 |
| U | 1.2E-03 | 1.2E-03 | 1.2E-03 |

Notes:

1. Mole of inorganic carbon atoms/mole sodium.
2. Mole of organic carbon atoms/mole sodium

Data Source: WTP Contract, DE-AC27-01-RV-14136, Modification A057, U.S. Department of Energy, Richland Operations Office, Richland, Washington.

**Table 6-9 WTP Contract Specification Table TS-7.2, Low-Activity Waste Radionuclide Content,1 Soluble Fraction Only.**

| Radionuclide | Maximum ratio, radionuclide (μCi) to sodium (mole) | | |
|---|---|---|---|
| | Envelope A | Envelope B | Envelope C |
| TRU[2] | 1.30E+01 | 1.30E+01 | 8.11E+01 |
| $^{137}$Cs | 1.16E+05 | 5.41E+05 | 1.16E+05 |
| $^{90}$Sr | 1.19E+03 | 1.19E+03 | 2.16E+04 |
| $^{99}$Tc | 1.92E+02 | 1.92E+02 | 1.92E+02 |
| $^{60}$Co | 1.65E+00 | 1.65E+00 | 1.00E+01 |
| $^{154}$Eu | 1.62E+01 | 1.62E+01 | 1.16E+02 |

Notes:

1. The activity limit shall apply to the feed certification date.
2. TRU is defined as: Alpha-emitting radionuclides with an atomic number greater than 92 with half-life greater than 20 years.

Some radionuclides, such as $^{90}$Sr and $^{137}$Cs, have daughters with relatively short half-lives. These daughters have not been listed in this table. However, they are present in concentrations associated with the normal decay chains of the radionuclides.

Data Source: WTP Contract, DE-AC27-01-RV-14136, Modification A057, U.S. Department of Energy, Richland Operations Office, Richland, Washington.

The TFC will plan to deliver feed that meets the WTP contract specifications, but instances of minor non-compliance do not disqualify a feed. If the waste does not meet the specifications, the WTP safety authorization basis, or the criteria for compatibility or pH, the WTP Contractor and/or the TFC will determine and execute actions necessary to be able to receive the feed (i.e., tank adjustment, negotiation with the U.S. Department of Energy [DOE], etc.).

The original envelope concept was established by PNL-10854, Low-Activity Waste Envelopes for Initial Quantity of the Hanford Tank Waste Remediation System WTP Project. "Envelope A represents waste that will test the production capacity and fission product removal efficiency of the plants while producing a final product in which the waste loading will be limited by sodium. Envelope B waste is similar to Envelope A, but this waste will produce a final product in which the waste loading will be limited by minor component concentrations. Envelope C represents waste with complexing agents that may interfere with Sr-90 and/or TRU decontamination requiring demonstration of organic destruction or some other acceptable mitigation technology."

Specification 7 states as a requirement, "The LAW feed provided shall not contain a visible separate organic phase" (RL 2000). For feed delivery, this prohibits the transfer of feeds that have a visible separate organic layer. No DST feed source tank is known to have a separate organic layer. However, some tanks retrieved during post-2018 processing may have separate

organic liquid phases. For modeling purposes, it is assumed that the retrieval contractor will have done sufficient characterization of each tank to determine the presence of an organic liquid and no organics contaminate feed deliveries. A physical separation occurs early in the retrieval flow sheet (e.g., at the satellite retrieval facility or DST sluice tank), so there is no opportunity for the organic liquid to contaminate the balance of the feed delivery system. The organic liquid can be accumulated in a DST and handled separately. HTWOS does not track the accumulation or disposition of this organic liquid.

### 6.3.5 LAW Entrained Solids

Existing supernatant liquids decanted from LAW tanks will contain 0.5 wt% suspended (i.e., entrained) solids. Supernatant liquids obtained from dissolving LAW salts will entrain the same solids concentration as exists in the tank up to a maximum of 2 wt%. Entrained solids have the same composition as the average composition of solids in the tank.

***Basis:*** The contract limits entrained solids in LAW feeds to 3.8 wt%. The 0.5 and 2 wt% entrainment values used in the model were established based on engineering judgment regarding LAW solids entrainment. When decanting undisturbed supernatant layers, it was estimated that solids entrainment could be limited to 0.5 wt% based on observations of suspended solids concentrations ranging from 0.1 to 0.8 wt% (Geeting 1995), which was normalized to 0.5 wt% (Orme 1998). Up to 2 wt% solids could be entrained in feed batches prepared by operating mixer pumps to dissolve saltcake because the dissolution step may have suspended material that takes a long time to settle.

Actual entrained solids are more likely a different sort of material from settled solids—otherwise they would have settled. Characterization of entrained solids is difficult because supernatant samples typically entrain too little solids for analysis. In addition, samples that have disturbed or fluffed up the salt layer(s) are not fully representative of the entrained solids composition. The composition of entrained solids is assumed to be similar to the settled solids at the time of the transfer.

***Issue:*** The WTP LAW receiving tanks may not be designed to receive “settling” solids, regardless of the loading. If high-density particles accumulate over time, the tanks may not have the capability to re-suspend. If the quantity of solids entrained in the LAW feed becomes an issue, solid/liquid separation equipment may need to be installed in the tank farms.

### 6.3.6 HLW Feed Specifications

BNI contract Specification 8 will be used to assess envelope compliance.

***Basis:*** The HLW feed specifications are not applied as a constraint in the HTWOS model, but are used as part of the analysis of results from the model. The TFC will plan to deliver feed that meets the WTP contract specifications. HTWOS is not programmed with specification compliance as a constraint on delivery and HTWOS may simulate feed delivery of feeds that are out of compliance. Compliance with the WTP contract specification is analyzed independently of the HTWOS model run. If the waste does not meet the specifications, the WTP safety authorization basis, or the criteria for incompatibility or pH, the WTP Contractor and/or the TFC will determine and execute actions necessary to be able to receive the feed (i.e., tank adjustment, negotiation with the DOE, etc.).

The HLW slurry will contain a mixture of liquids (Envelopes A, B, or C) and solids (Envelope D). The compositional range of the liquid fraction is defined in Specification 7, *Low-Activity Waste Envelopes Definition* (see Section 6.3.4). For liquid fractions with a sodium molarity of less than three, the liquid shall be treated as if 3 molar sodium were present for feed certification purposes. The Envelope D feed specification tables are reproduced as Table 6-10 through Table 6-13 and lists limits on components that do not impact feed qualification, but are important to HLW glass production. The feed concentration will be between 10 and 200 grams of unwashed solids/liter, except for feeds from waste Tanks AZ-101 and AZ-102, where the minimum solids content does not apply.

The HLW feed source tanks do not have an organic layer that requires removal before the waste is delivered to the WTP.

The solids composition in the HLW feed slurry should not be limited by any safety constraints. The waste transfer leak accident analysis in the RPP-13033, *Tank Farms Documented Safety Analysis* used an upper-bound solids concentration of 25 volume%. However, the upper-bound solids concentration in the contract feed specification is 200 grams of unwashed solids per liter of slurry (RL 2000). At an assumed solid density of 3 grams per cubic centimeter and a solid loading of 200 grams per liter of slurry, the solid loading is about 6.7 volume%. This is well below the bounding value used in the DSA.

**Table 6-10 WTP Contract Specification Table TS-8.1 HLW Feed Unwashed Solids Maximum Non-Volatile Component Composition. (grams/100 g non-volatile waste oxides).**

| Non-volatile Element | Maximum | Non-volatile Element | Maximum |
|---|---|---|---|
| As | 0.16 | Pu | 0.054 |
| B | 1.3 | Rb | 0.19 |
| Be | 0.065 | Sb | 0.84 |
| Ce | 0.81 | Se | 0.52 |
| Co | 0.45 | Sr | 0.52 |
| Cs | 0.58 | Ta | 0.03 |
| Cu | 0.48 | Tc | 0.26 |
| Hg | 0.1 | Te | 0.13 |
| La | 2.6 | Tl | 0.45 |
| Li | 0.14 | V | 0.032 |
| Mn | 6.5 | W | 0.24 |
| Mo | 0.65 | Y | 0.16 |
| Nd | 1.7 | Zn | 0.42 |
| Pr | 0.35 | - | - |

Note: Data Source: WTP Contract, DE-AC27-01-RV-14136, Modification M057, U.S. Department of Energy, Richland Operations Office, Richland, Washington (RL 2000).

**Table 6-11 WTP Contract Specification Table TS-8.2 HLW Feed Unwashed Solids Maximum Volatile Component Composition. (grams per 100 grams non-volatile waste oxides).**

| Volatile Components | Maximum |
|---|---|
| Cl | 0.33 |
| $CO_3^{-2}$ | 30 |
| $NO_2$ | 36 (total $NO_2/NO_3$) as $NO_3$ |
| $NO_3$ | |
| TOC | 11 |
| CN | 1.6 |
| $NH_3$ | 1.6 |

Note: Data Source: WTP Contract, DE-AC27-01-RV-14136, Modification M057, U.S. Department of Energy, Richland Operations Office, Richland, Washington (RL 2000).

**Table 6-12 WTP Contract Specification Table TS-8.3 HLW Feed Unwashed Solids Maximum Radionuclide Composition. (Ci/100 g non-volatile waste oxides).**

| Isotope | Maximum | Isotope | Maximum | Isotope | Maximum |
|---|---|---|---|---|---|
| $^{3}H$ | 6.5E-05 | $^{129}I$ | 2.9E-07 | $^{237}Np$ | 7.4E-05 |
| $^{14}C$ | 6.5E-06 | $^{137}Cs$ | 1.5E+00 | $^{238}Pu$ | 3.5E-04 |
| $^{60}Co$ | 1.0E-02 | $^{152}Eu$ | 4.8E-04 | $^{239}Pu$ | 3.1E-03 |
| $^{90}Sr$ | 1.0E+01 | $^{154}Eu$ | 5.2E-02 | $^{241}Pu$ | 2.2E-02 |
| $^{99}Tc$ | 1.5E-02 | $^{233}U$ | 4.5E-06 (all tanks except AY-101/C-104) 2.0E-04 (AY-101/C-104 only) | $^{241}Am$ | 9.0E-02 |
| $^{125}Sb$ | 3.2E-02 | $^{235}U$ | 2.5E-07 | $^{243+244}Cm$ | 3.0E-03 |
| $^{126}Sn$ | 1.5E-04 | - | - | - | - |

Notes:

1. The $^{233}U$ limit for tank AY-101 (with C-104) is 2.0E-04 Ci per 100 grams unwashed solids. The $^{233}U$ limit for all other HLW feed tanks is 4.5E-06 Ci per 100 grams unwashed solids.

Data Source: WTP Contract, DE-AC27-01-RV-14136, Modification M057, U.S. Department of Energy, Richland Operations Office, Richland, Washington (RL 2000).

**Table 6-13 WTP Contract Specification Table TS-8.4 Additional HLW Feed Composition for Non-volatile Components. (g/100 g non-volatile waste oxides).**

| Non-volatile Element | Maximum | Non-volatile Element | Maximum |
|---|---|---|---|
| Ag | 0.55 | Ni | 2.4 |
| Al | 14 | P | 1.7 |
| Ba | 4.5 | Pb | 1.1 |
| Bi | 2.8 | Pd | 0.13 |
| Ca | 7.1 | Rh | 0.13 |
| Cd | 4.5 | Ru | 0.35 |
| Cr | 0.68 | S | 0.65 |
| F | 3.5 | Si | 19 |
| Fe | 29 | Th | 5.0 |
| K | 1.3 | Ti | 1.3 |
| Mg | 2.1 | U | 14 |
| Na | 19 | Zr | 15 |

Note: Data Source: WTP Contract, DE-AC27-01-RV-14136, Modification M057, U.S. Department of Energy, Richland Operations Office, Richland, Washington. (RL 2000)

### 6.3.7 Feed Compliance Verification Sampling

Staged feed must remain in a DST for 210 days after filling the tank before delivering to the WTP to provide time to complete feed specification compliance sampling and analysis.

***Basis:*** Feed compliance verification sampling takes 30 days to complete and must be completed so that samples are provided to the WTP contractor at least 180 days before the feed is delivered to the WTP, yielding a total duration of 210 days for compliance verification.

## 6.4 PRETREATMENT ASSUMPTIONS

### 6.4.1 LAW Feed Receipt Tanks

The LAW feed receipt has a total capacity of 1.5 Mgal and the tank will be operated so that the WTP can receive 1 Mgal batches of LAW from the DST system without interruption.

***Basis:*** A LAW feed receipt capacity of 1.5 Mgal provides a residual feed capacity of 0.5 Mgal. HTWOS modeling of the WTP does not account for the time lag between feed receipt and feed to the melter; therefore, the residual capacity can provide feed for continued processing. This

tank also receives liquid recycled from the HLW melter off-gas system submerged bed scrubber (SBS).

### 6.4.2 HLW Feed Receipt Tanks/Lag Storage

The modeling of the WTP HLW feed receipt tank usage assumes the following;

1. The HLW feed receipt system shall have sufficient space to receive 160,000 gallons (600 $m^3$) without interruption.
2. The HLW feed deliveries do not need to be suspended when the LAW feed receipt tank contains waste from tank AN-102 or AN-107.
3. All HLW batches must be at least 130,000 gallons total volume and contain between 10 and 200 grams of unwashed solids per liter of feed slurry.
4. Deliver the HLW solids at a target nominal solid concentration of 8 wt% to facilitate more efficient WTP operations.

***Basis:*** Batches with volumes less than 130,000 gallons may be delivered to the WTP when trying to deliver all of the waste from a DST (to minimize the heel) or near the end of the mission when cleaning out the DSTs. The assumption to suspend HLW feed deliveries when the LAW feed receipt tank contains waste from tank AN-102 or AN-107 was used in the past to avoid cross-contamination of waste within the WTP and is not necessary in this model run because the AN-102 and AN-107 wastes are pretreated in the DSTs. This solid concentration should be interpreted as a target value being used to determine the feasibility of its application and not as a rigorous constraint. The governing requirement comes from Specification 8 (see Section 6.3.6).

### 6.4.3 FEP and TLP Evaporator Splits

The FEP will be concentrated to a 5 M Na endpoint and the TLP Evaporator product will be at 8 M Na. The tables of Evaporator and Condenser Splits are given in Table A-2.

Basis: The evaporator splits are based on the WTP G2 model splits (24590-WTP-MDD-PR-01-002) with noted exceptions.

### 6.4.4 UFP Solids Concentration and Rate

The processing rate through the UFP is a maximum of 15.6 gpm and the end point for Envelopes A, B, C, and D is 20 wt% and for envelope C it is 15 wt% solids.

***Basis:*** The UFP end-product concentration is based on values in 24590-WTP-MDD-PR-01-002. The UFP flux rate or processing rate is based on values in RPP-35320, *WTP Ultra-Filter Permeate Assumption for System Modeling*.

### 6.4.5 Wash and Caustic Leach Factors

The water wash factors in the TWINS on 3/7/2007 will be used for partitioning waste into solid and liquid phases during retrieval and staging. The caustic leach factors in the TWINS on 3/7/2007 will be used as the basis for computing the caustic leach factors associated with each delivered batch of HLW solids and for the entrained solids.

***Basis:*** The most current wash and caustic leach factors from TWINS are used to predict solid dissolution in water and caustic.

***Issue*:** The wash and leach factors being used represent a zero-order approximation of the solid/liquid equilibrium occurring during caustic leaching and water washing, and do not represent all the possible variations of solid/liquid equilibrium that can occur at different concentrations, ion strength, and temperature. (A zero-order approximation means that the data are point values with no correlation to a common factor. A first-order correlation is a line of the form y = ax + b).

***Issue*:** Not all of the wash and leach factors being used are based on results from tests or analyses performed using actual waste samples. Sample-based factors for specific waste types or specific tanks have been extrapolated to the waste in other tanks based on the similarities of waste in the tanks. Uncertainties in the wash and leach factors are compounded by uncertainties in the knowledge of how different waste types are distributed in the Hanford tanks.

***Issue*:** The chemistry of the waste (i.e., the solid/liquid equilibrium) is expected to change as the wastes are moved through the system and blended with other wastes. The degree of change depends on the retrieval conditions (i.e., the use of dilute or concentrated solutions for a specific retrieval), the particular wastes blended, and other factors associated with the blending (e.g., heel compositions, relative blending ratios, flush volumes, etc.). Changes in the solid/liquid equilibrium should result in a change of the wash and leach factors. There is no methodology in place to update wash and leach factors as waste is retrieved from SSTs to DSTs, or moved between the DSTs.

### 6.4.6 Caustic Leaching

All solids delivered with the HLW feed and entrained solids delivered with the LAW feed will undergo caustic leaching, and caustic-leached solids containing more than 5,000 μg Cr / g dried solids will undergo oxidative leaching. The insoluble fraction remaining will be incorporated into HLW glass. Sufficient caustic will be added to the waste during caustic leaching so that 3.0 M [OH-] remains in solution after the leach reactions are complete.

***Basis:*** Caustic leaching is accomplished by adding a solution of sodium hydroxide (caustic) to HLW slurry in the ultrafiltration tank and "cooking" at an elevated temperature to dissolve Al and other components. Sufficient caustic is added to the ultrafiltration system feed tank to result in a final hydroxide concentration of 3 M after the caustic leaching step, in which step the caustic leach reactions are applied. Eight hours after the caustic was added, enough liquid is decanted (and pumped through the ultrafilter) to result in an average solid concentration of 20 wt%. The model checks the Cr concentration and if the Cr concentration in the leached solids is greater than 5,000 μg Cr per gram of dry solids, the model adds $NaMnO_4$ and applies the oxidative leaching reactions to remove Cr down to 5,000 μg Cr per gram of dry solids. Water is then added in 5,000 gallon batches to wash the solids. After each wash addition the solids are settled and enough liquid is decanted to reach 20 wt% solids. The washing is repeated until the permeate tank is full, which typically occurs after four washes.

### 6.4.7 Oxidative Leaching

An oxidative leach process that removes Cr from the HLW sludge without impact on cycle time or other species will be implemented in the ultrafilters. Reaction stoichiometry and endpoint (5,000 μg Cr / g dried solids) are given in Table 6-4 and described in RPP-15552.

***Basis:*** RPP-15552, *Hanford Waste tank Oxidative Leach Behavior Analysis* discusses the oxidative leach process.

***Issue*:** The performance of the oxidative leach process is based on limited data.

### 6.4.8 Cs Ion Exchange Spent Resin

There will be approximately 300 gallons (2005 $lb_m$ air-dried) of spent cesium ion exchange resin generated for every 300,000 gallons of supernate treated through the cesium ion exchange system. Loading of the spent cesium ion exchange resin will be based on the constituents and concentrations listed in Table 6-14 after being prepared for disposal.

***Basis:*** The Cs Ion exchange estimates were taken from 24590-WTP-RPT-PT-02-005, *Flowsheet Bases, Assumptions, and Requirements*.

**Table 6-14 Cs Ion Exchange Spent Resin Loading**

| Component | HTWOS Spent Resin Loading Value | Calculated Average Concentration in Na Form Resin[1] | Column 1 - Concentration in Na Form Resin[2] | Column 2 - Concentration in H Form Resin[2] |
|---|---|---|---|---|
| **Metals** | **µg/g dry Na Form Resin** | **µg/g dry Na Form Resin** | **µg/g dry Na Form Resin** | **µg/g dry H Form Resin** |
| Ag | 43.1 | 43.1 | 49.0 | 46.5 |
| As | 9.20 | 9.20 | 7.6 | 13.5 |
| Ba | 6.92 | 6.92 | 12.8 | 1.3 |
| Cd | 2.0 | 2.0 | 1.5 | 3.1 |
| Cr | 2,816 | 2,816 | 2,440 | 3,990 |
| $^{133}$Cs | 1.80 | 1.80 | 1.80 | 0.00 |
| Na | 42,844 | 42,844 | 85,550 | 173 |
| Ni | 23.1 | 23.1 | 11 | 44.0 |
| Pb | 96.9 | 96.9 | 56.2 | 172 |
| Se | 4.8 | 4.8 | 4.3 | 6.6 |
| U | 3.28 | 3.28 | <3.0 | 4.10 |
| **Radionuclides** | **Ci/g dry Na Form Resin** | **µCi/g dry Na Form Resin** | **µCi/g dry Na Form Resin** | **µCi/g dry H Form Resin** |
| $^{60}$Co | 1.36E-7 | 0.136 | 0.132 | 0.175 |
| $^{99}$Tc | 8.20E-8 | 0.082 | 0.095 | 0.085 |
| $^{106}$Ru | 1.50E-8 | 0.0150 | <0.02 | 0.0187 |
| $^{134}$Cs | 1.130E-9 | 0.001130 | 0.00198 | 0.000351 |
| $^{137}$Cs | 1.17E-5 | 11.7 | 21.9 | 1.8 |
| $^{154}$Eu | 7.30E-9 | 0.00730 | <0.0004 | 0.00913 |
| $^{155}$Eu | 4.60E-9 | 0.00460 | <0.005 | 0.00575 |

**Table 6-14 Cs Ion Exchange Spent Resin Loading**

| Component | HTWOS Spent Resin Loading Value | Calculated Average Concentration in Na Form Resin[1] | Column 1 - Concentration in Na Form Resin[2] | Column 2 - Concentration in H Form Resin[2] |
|---|---|---|---|---|
| **Transuranics** | **Ci/g dry Na Form Resin** | **nCi/g dry Na Form Resin** | **nCi/g dry Na Form Resin** | **nCi/g dry H Form Resin** |
| $^{237}Np$ | 6.35E-10 | 0.635 | <4 | 0.794 |
| $^{238}Pu$ | 3.71E-9 | 3.71 | 1.01 | 8.01 |
| $^{239+240}Pu$ | N/A | 35.6 | 8.39 | 78.6 |
| $^{239}Pu$[3] | 7.64E-9 | N/A | N/A | N/A |
| $^{240}Pu$[3] | 2.80E-8 | N/A | N/A | N/A |
| $^{241}Am$ | 6.290E-9 | 6.290 | 1.58 | 13.75 |
| $^{243+244}Cm$ | N/A | 1.14 | 0.236 | 2.56 |
| $^{243}Cm$[3] | 4.39E-10 | N/A | N/A | N/A |
| $^{244}Cm$[3] | 7.01E-10 | N/A | N/A | N/A |

Notes:

1. The average component concentration loaded on the spent resin is calculated as the average of the concentration in the Na Form resin ("Column 1") and 80% of the concentration in the H Form resin ("Column 2"). When a less-than value is reported (<), the less-than value is ignored and the available data is used directly without averaging. A factor of 0.8 (80%) is applied to the concentration in the H Form resin to place the H Form resin results on the same basis as the Na Form resin because it was assumed that the spent resin will be converted to the Na Form for disposal.
2. The "Column 1" and "Column 2" data were taken from Table 2.5-8a of 24590-WTP-RPT-PT-02-005, Rev. 3. Loading concentration values for $^{133}Cs$ were not used because $^{133}Cs$ is not tracked within HTWOS. Loading concentration values for Total beta and Total alpha were not used because of a lack of information as to which isotopes contribute to those totals.
3. Loading concentrations for the individual isotopes $^{239}Pu$, $^{240}Pu$, $^{243}Cm$, and $^{244}Cm$ were derived from the loading values for combined isotopes ($^{239+240}Pu$ and $^{243+244}Cm$). It was assumed that each isotope of a particular element loaded on the column to the same molar concentration (i.e., that they are chemically similar). The isotopic loading concentration could then be calculated based on its relative contribution to the total loading concentration.

# 7.0 LAW MELTER

This section describes the process and HTWOS modeling of the activities associated immobilizing LAW in a stable waste form (ILAW).

## 7.1 LAW MELTER PROCESS DESCRIPTION

The LAW Melter in HTWOS consists of the WTP LAW melter feed process and the LAW melter process. The purpose of the LAW melter feed process is to store and sample the LAW concentrate, mix it with glass-formers, and feed it into the melter. The LAW melter feed process consists of:

- Concentrate receipt vessels (system LCP-LAW concentrate receipt process system)
- Glass-former feed hoppers (system GFR-glass-formers reagent system)
- Melter feed preparation vessels and melter feed vessels (system LFP-LAW melter feed process system)

The LAW feed system receives LAW concentrate from the PT facility and mixes the waste with glass-formers and sucrose. The mixed melter feed is transferred to the melter feed vessels (MFV), where it is pumped to the LAW melters.

The function of the LAW melter process is to convert LAW into glass via joule-heated melters. Heat decomposes the waste into elemental oxides (and other minor constituents) that dissolve into the glass pool in each melter, and moist gases that exit each melter's plenum. Glass discharges from the melters into large cylindrical steel containers, where it cools. The sealed containers of glass become the immobilized low-activity waste (ILAW) for disposal at the Hanford Site.

Moist gases from the melter plenums are directed to a film cooler adjacent to each melter. The primary function of a film cooler is to help prevent deposits from forming in the offgas piping.

The WTP contract (DOE 2002) gives specifications for the glass composition and characteristics.

A system for collection of a representative sample is required for glass formulation to ensure that the glass complies with the requirements. The glass-former feed hoppers receives blended glass-former batches from the glass-former facility, re-blends the batches, and gravity feeds the glass-former batches to the melter feed preparation vessels. The glass former chemicals are wetted prior to delivery to the melter feed preparation vessels in order to prevent dusting in the MFPV.

The LAW melter feed preparation vessels receive the LAW concentrate from the concentrate receipt vessels and mix the waste with glass-formers from the glass-former feed hopper. This mixture is transferred to the melter feed vessels. Enough waste must be mixed with the glass-formers to achieve the minimum waste loading of $Na_2O$ as specified in the SOW.

Two melters are required to meet the required production rates. Each melter train consists of a dedicated melter feed vessel and film cooler. Each melter produces 15 metric tons of glass (MTG) per day. A total of 30 MTG/day is made when both melters are operating.

The melters convert treated LAW concentrate with glass formers into molten glass. Each melter is supplied by its own melter feed vessel. The film cooler is considered part of the primary offgas system. The melter maintains a large pool of molten glass at approximately 1150 °C. Temperature in the glass pool is maintained by joule heating (electrical resistance heating). The waste (as oxides) dissolves in the glass. The glass acts as the solvent. Most of the oxides have higher melting points than the glass they make. Consequently, the oxides in the cold cap dissolve into the glass pool to form more glass.

Bubblers are used to inject air that agitates the glass pool, delivering heat, and fresh molten glass to the cold cap. Bubblers also help to maintain a consistent temperature profile through the molten pool that, in turn, helps to control electrical current.

The film cooler reduces the amount of deposits accumulating in the offgas piping by creating a layer of gas along pipe walls where semi-volatile materials would normally condense. The molten glass is poured into large stainless steel canisters..

## 7.2 LAW MELTER SYSTEM MODEL DESCRIPTION

The HTWOS WTP LAW Melter system is shown in Figure D-6 and is comprised of the following modeled equipment which are listed in Table B-3, along with the key parameters.

- LAW feed receipt tank (HTWOS-V21001).
- LAW glass formers supply tank (HTWOS-T21101).
- LAW melter feed blending tank (HTWOS-V21101).
- LAW melter feed tank (HTWOS-V21201).
- LAW melter (HTWOS-LAW-MELTER-1).
- Collection vessel for ILAW packages (HTWOS-LAW-CANISTERS).
- Collection vessel for failed melters removed from service (FAILED-LAW-MELTERS).
- Virtual tank for estimating the quantity of glass based on the feed (LAW-MELTER-NEURAL-NET-DESTINATON)

The treated LAW from the TLP evaporator is collected in HTWOS-V21001. If bulk vitrification is being used some of the waste can be routed to the East Area Supplemental Treatment System instead of the LAW melter based on programmatic assumptions. Glass formers are added based on the glass formulation for the DOE model (≤ 20% wt% Na2O and ≤ 0.8 wt% SO3). The Glass Formers workspace is shown in Figure D-7 and consists of twelve solid-chem-adds for the various glass former chemicals, listed below which are included in the model.

- ZnO
- $SiO_2$
- $Al_2SiO_4$
- $TiO_3$
- $Fe_2O_3$
- $LiCO_3$
- $MgSiO_3$
- $ZrSiO_4$
- Sucrose
- $B_2O_3$
- $CaSiO_3$
- $Na_2O$

The analyzer is programmed to add the glass formers to T21101 based on the desired glass formulation being used (see section 2.3.6.1 for a discussion of the glass formulation core function).

The LAW melter operation is modeled as a single melter having the total capacity of all the LAW melters that will be installed in the WTP. A proportional integral controller (PI) is set to adjust the melter's throughput rate in MTG/d. The rate at which the melter operates varies throughout the mission. The PI controller totalizes the volume of melted glass transferred from the LAW melter to packaging every eight hours. The transferred volume is converted to a rate by use of the glass's density. The rate calculated is then compared to the operating rate. If the calculated value and set value do not match, the PI controller adjusts the melter feed rate to maintain the desired product rate.

When feed enters the melter, a split is applied to the non-gas components including the liquid and solid wastes, and oxide glass formers and associated mineral impurities. The liquid split values apply to the liquid components that come into the melter while the solid split values apply to the combined solids of solid wastes, oxide glass formers, and impurities. The predefined split values are shown in Table A-3. The exception is applied to sulfate where the split is purposely set to zero so that the quantity of sulfur going to the offgas system is controlled by the $S0_4^{-2}$ decomposition. The conversion factor for the $S0_4^{-2}$ decomposition reaction is determined dynamically depending on the concentration of sulfate in the feed. The reactions which take place in the melter are defined in Table 7-1.

The ILAW packages are collected in the HTWOS-LAW-CANISTERS vessel, where they are totaled for the mission summary. No lag storage is provided for ILAW packages in the WTP. The ILAW packages will be shipped to the Integrated Disposal Facility as they are produced in the WTP (not modeled).

For the purposes of estimating secondary waste generation from LAW melter operations, one LAW melter is assumed to be replaced every 2.5 years. At the time of replacement, the contents of the melter are sent to the FAILED-LAW MELTERS vessel. The glass remaining in the LAW melter (FAILED-LAW MELTERS) at the end of the mission will be sent to the spent melter stream. No loss of production is incurred by the replacement of a new melter.

**Table 7-1 Chemical Reactions used in HTWOS to Simulate LAW Melter Performance.**

| Reaction Name | Reaction Stoichiometry | Extent of Reaction |
|---|---|---|
| SUGAR-NO3-DECOMPOSITION | 0.1 C12H22O11(gf) + 1.0 Na+(l) + 1.0 NO3-(l) --> 0.5 Na2O(o) + 0.5 N2(g) + 1.2 CO2(g) + 1.1 H2O(g) + 0.05 O2(g) | 0.5 |
| SUGAR-NO2-DECOMPOSITION | 0.06 C12H22O11(gf) + 1.0 Na+(l) + 1.0 NO2-(l) --> 0.5 Na2O(o) + 0.5 N2(g) + 0.72 CO2(g) + 0.66 H2O(g) + 0.03 O2(g) | 0.5 |
| NO3-DECOMPOSITION | 2.0 NO3-(l) --> 1.0 NO(g) + 1.0 NO2(g) + 1.5 O2(g) | 1 |
| NO2-DECOMPOSITION | 2.0 NO2-(l) --> 1.0 NO(g) + 1.0 NO2(g) + 0.5 O2(g) | 1 |
| CO3-DECOMPOSITION | 1.0 CO3-2(l) --> 1.0 CO2(g) + 0.5 O2(g) | 1 |
| SO4-DECOMPOSITION | 1.0 SO4-2(l) --> 1.0 SO2(g) + 1.0 O2(g) | 0.2 |
| OH-DECOMPOSITION | 2.0 OH-(l) --> 1.0 H2O(g) + 0.5 O2(g) | 1 |
| NH3-DECOMPOSITION | 2.0 NH3(l) + 3.0 O2(g) --> 1.0 NO(g) + 1.0 NO2(g) + 3.0 H2O(g) | 1 |
| SUGAR-DECOMPOSITION | 1.0 C12H22O11(gf) + 12.0 O2(g) --> 12.0 CO2(g) + 11.0 H2O(g) | 1 |
| AG-OXIDE | 2.0 Ag+(l) + 0.5 O2(g) --> 1.0 Ag2O(o) | 1 |
| AL-OXIDE | 2.0 Al+3(l) + 1.5 O2(g) --> 1.0 Al2O3(o) | 1 |
| AL-OXIDE2 | 2.0 Al(OH)4-(l) --> 0.5 O2(g) + 1.0 Al2O3(o) + 4.0 H2O(g) | 1 |
| AM-OXIDE | 2.0 241-Am(l) + 1.5 O2(g) --> 1.0 Am2O3(o) | 1 |
| AS-OXIDE | 2.0 As+5(l) + 2.5 O2(g) --> 1.0 As2O5(o) | 1 |
| B-OXIDE | 2.0 B+3(l) + 1.5 O2(g) --> 1.0 B2O3(o) | 1 |
| BA-OXIDE | 1.0 Ba+2(l) + 0.5 O2(g) --> 1.0 BaO(o) | 1 |
| BE-OXIDE | 1.0 Be+2(l) + 0.5 O2(g) --> 1.0 BeO(o) | 1 |
| BI-OXIDE | 2.0 Bi+3(l) + 1.5 O2(g) --> 1.0 Bi2O3(o) | 1 |
| CA-OXIDE | 1.0 Ca+2(l) + 0.5 O2(g) --> 1.0 CaO(o) | 1 |
| CD-OXIDE | 1.0 Cd+2(l) + 0.5 O2(g) --> 1.0 CdO(o) | 1 |
| CE-OXIDE | 1.0 Ce+3(l) + 1.0 O2(g) --> 1.0 CeO2(o) | 1 |
| CL-OXIDE | 1.0 Cl-(l) --> 1.0 Cl-(o) | 1 |
| CM-OXIDE | 2.0 242-Cm(l) + 1.5 O2(g) --> 1.0 Cm2O3(o) | 1 |
| CO-OXIDE | 2.0 Co+3(l) + 1.5 O2(g) --> 1.0 Co2O3(o) | 1 |
| CR-OXIDE | 2.0 Cr(TOTAL)(l) + 1.5 O2(g) --> 1.0 Cr2O3(o) | 1 |
| CR-OXIDE2 | 2.0 Cr(OH)4-(l) --> 0.5 O2(g) + 1.0 Cr2O3(o) + 4.0 H2O(g) | 1 |
| CS-OXIDE | 2.0 Cs+(l) + 0.5 O2(g) --> 1.0 Cs2O(o) | 1 |
| CU-OXIDE | 1.0 Cu+2(l) + 0.5 O2(g) --> 1.0 CuO(o) | 1 |
| FE-OXIDE | 2.0 Fe+3(l) + 1.5 O2(g) --> 1.0 Fe2O3(o) | 1 |
| K-OXIDE | 2.0 K+(l) + 0.5 O2(g) --> 1.0 K2O(o) | 1 |
| LA-OXIDE | 2.0 La+3(l) + 1.5 O2(g) --> 1.0 La2O3(o) | 1 |
| LI-OXIDE | 2.0 Li+(l) + 0.5 O2(g) --> 1.0 Li2O(o) | 1 |
| MG-OXIDE | 1.0 Mg+2(l) + 0.5 O2(g) --> 1.0 MgO(o) | 1 |

**Table 7-1 Chemical Reactions used in HTWOS to Simulate LAW Melter Performance.**

| Reaction Name | Reaction Stoichiometry | Extent of Reaction |
|---|---|---|
| MN-OXIDE | 1.0 MnO4-(l) --> 1.0 MnO2(o) + 1.0 O2(g) | 1 |
| MN-OXIDE2 | 1.0 Mn+4(l) + 1.0 O2(g) --> 1.0 MnO2(o) | 1 |
| MN-OXIDE3 | 1.0 MnO2(l) --> 1.0 MnO2(o) | 1 |
| MO-OXIDE | 1.0 Mo+6(l) + 1.5 O2(g) --> 1.0 MoO3(o) | 1 |
| NA-OXIDE | 2.0 Na+(l) + 0.5 O2(g) --> 1.0 Na2O(o) | 1 |
| NB-OXIDE | 2.0 93m-Nb(l) + 2.5 O2(g) --> 1.0 Nb2O5(o) | 1 |
| ND-OXIDE | 2.0 Nd+3(l) + 1.5 O2(g) --> 1.0 Nd2O3(o) | 1 |
| NI-OXIDE | 1.0 Ni+2(l) + 0.5 O2(g) --> 1.0 NiO(o) | 1 |
| NP-OXIDE | 1.0 237-Np(l) + 1.0 O2(g) --> 1.0 NpO2(o) | 1 |
| P-OXIDE | 2.0 PO4-3(l) --> 1.0 P2O5(o) + 1.5 O2(g) | 1 |
| PB-OXIDE | 1.0 Pb+2(l) + 0.5 O2(g) --> 1.0 PbO(o) | 1 |
| PU-OXIDE | 1.0 Pu+4(l) + 1.0 O2(g) --> 1.0 PuO2(o) | 1 |
| RB-OXIDE | 2.0 Rb+(l) + 0.5 O2(g) --> 1.0 Rb2O(o) | 1 |
| RH-OXIDE | 2.0 Rh+3(l) + 1.5 O2(g) --> 1.0 Rh2O3(o) | 1 |
| RU-OXIDE | 2.0 Ru+3(l) + 1.5 O2(g) --> 1.0 Ru2O3(o) | 1 |
| SB-OXIDE | 2.0 Sb+5(l) + 1.5 O2(g) --> 1.0 Sb2O3(o) | 1 |
| SE-OXIDE | 1.0 Se+6(l) + 1.0 O2(g) --> 1.0 SeO2(o) | 1 |
| SI-OXIDE | 1.0 Si+4(l) + 1.0 O2(g) --> 1.0 SiO2(o) | 1 |
| SM-OXIDE | 2.0 151-Sm(l) + 1.5 O2(g) --> 1.0 Sm2O3(o) | 1 |
| SN-OXIDE | 1.0 126-Sn(l) + 1.0 O2(g) --> 1.0 SnO2(o) | 1 |
| S-OXIDE | 1.0 SO4-2(l) --> 1.0 SO3(o) + 0.5 O2(g) | 1 |
| SR-OXIDE | 1.0 Sr+2(l) + 0.5 O2(g) --> 1.0 SrO(o) | 1 |
| TC-OXIDE | 2.0 Tc+7(l) + 3.5 O2(g) --> 1.0 Tc2O7(o) | 1 |
| TE-OXIDE | 1.0 Te+6(l) + 1.0 O2(g) --> 1.0 TeO2(o) | 1 |
| TH-OXIDE | 1.0 Th+4(l) + 1.0 O2(g) --> 1.0 ThO2(o) | 1 |
| TI-OXIDE | 1.0 Ti+4(l) + 1.0 O2(g) --> 1.0 TiO2(o) | 1 |
| TL-OXIDE | 2.0 Tl+3(l) + 1.5 O2(g) --> 1.0 Tl2O3(o) | 1 |
| U-OXIDE | 3.0 U(TOTAL)(l) + 4.0 O2(g) --> 1.0 U3O8(o) | 1 |
| V-OXIDE | 2.0 V+5(l) + 2.5 O2(g) --> 1.0 V2O5(o) | 1 |
| W-OXIDE | 1.0 W+6(l) + 1.5 O2(g) --> 1.0 WO3(o) | 1 |
| ZN-OXIDE | 1.0 Zn+2(l) + 0.5 O2(g) --> 1.0 ZnO(o) | 1 |
| ZR-OXIDE | 1.0 Zr+4(l) + 1.0 O2(g) --> 1.0 ZrO2(o) | 1 |
| F-OXIDE2 | 2.0 F-(l) + 2.0 Na+(l) + 1.0 H2O(l) --> 1.0 Na2O(o) + 2.0 HF(g) | 0.157 |
| F-OXIDE | 1.0 F-(l) --> 1.0 F-(o) | 1 |
| CL-OXIDE2 | 2.0 Cl-(l) + 2.0 Na+(l) + 1.0 H2O(l) --> 1.0 Na2O(o) + 2.0 HCl(g) | 0.333 |

**Table 7-1 Chemical Reactions used in HTWOS to Simulate LAW Melter Performance.**

| Reaction Name | Reaction Stoichiometry | Extent of Reaction |
|---|---|---|
| CL-OXIDE | 1.0 Cl-(l) --> 1.0 Cl-(o) | 1 |
| NA-OXIDE | 2.0 Na+(l) + 0.5 O2(g) --> 1.0 Na2O(o) | 1 |
| BOIL-WATER-REACTION | 1.0 H2O(l) --> 1.0 H2O(g) | 1 |
| PR-OXIDE | 2.0 Pr+3(l) + 1.5 O2(g) --> 1.0 Pr2O3(o) | 1 |
| Y-OXIDE | 2.0 Y+3(l) + 1.5 O2(g) --> 1.0 Y2O3(o) | 1 |
| HG-OXIDE | 1.0 Hg+2(l) + 0.5 O2(g) --> 1.0 HgO(o) | 1 |
| PD-OXIDE | 1.0 Pd+2(l) + 0.5 O2(g) --> 1.0 PdO(o) | 1 |
| TA-OXIDE | 2.0 Ta+5(l) + 2.5 O2(g) --> 1.0 Ta2O5(o) | 1 |
| EU-OXIDE | 2.0 152-Eu(l) + 1.5 O2(g) --> 1.0 Eu2O3(o) | 1 |
| AC-OXIDE | 2.0 227-Ac(l) + 1.5 O2(g) --> 1.0 Ac2O3(o) | 1 |
| C14-DECOMPOSITION | 1.0 14-C(l) + 1.0 O2(g) --> 1.0 CO2(g) | 1 |
| EVAP-IODINE-REACTION | 1.0 129-I(l) --> 1.0 129-I(g) | 1 |
| IODINE-SUBLIME-REACTION | 1.0 129-I(s) --> 1.0 129-I(g) | 1 |
| EVAP-NA-REACTION | 1.0 Na+(l) --> 1.0 Na+(g) | 1 |
| EVAP-CS-REACTION | 1.0 Cs+(l) + 1.0 134-Cs(l) + 1.0 137-Cs(l) --> 1.0 Cs+(g) + 1.0 134-Cs(g) + 1.0 137-Cs(g) | 1 |
| EVAP-K-REACTION | 1.0 K+(s) --> 1.0 K+(g) | 1 |
| EVAP-TC-REACTION | 1.0 99-Tc(s) --> 1.0 99-Tc(g) | 1 |
| SUBLIME-NA-REACTION | 1.0 Na+(s) --> 1.0 Na+(g) | 1 |
| SUBLIME-CS-REACTION | 1.0 Cs+(s) + 1.0 134-Cs(s) + 1.0 137-Cs(s) --> 1.0 Cs+(g) + 1.0 134-Cs(g) + 1.0 137-Cs(g) | 1 |
| SUBLIME-K-REACTION | 1.0 K+(s) --> 1.0 K+(g) | 1 |
| SUBLIME-TC-REACTION | 1.0 99-Tc(s) --> 1.0 99-Tc(g) | 1 |
| CN-DECOMPOSITION | 2.0 CN-(l) + 2.0 O2(g) --> 2.0 CO2(g) + 1.0 N2(g) | 1 |
| NEUT-REACTION | 1.0 H+(l) + 1.0 OH-(l) --> 1.0 H2O(l) | 1 |

## 7.3 LAW MELTER MODEL ASSUMPTIONS AND ISSUES

### 7.3.1 LAW Melter Glass Capacity

The melter is modeled with an operating volume of 6900 gallons of melted glass.

***Basis***: 6,900 gallons is the nominal volume of one melter. The PI controller is set to maintain the volume of glass in the melter between 6,546 and 7,236 gallons, with a set volume of 6,891 gallons. The value of the set volume stated in the assumptions (6,900 gallons) is the set volume rounded to the nearest 100 gallons.

### 7.3.2 Melter Replacement

For the purposes of estimating secondary waste generation from LAW melter operations, one LAW melter is assumed to be replaced every 2.5 years, sending the contents of the melter to the spent-melter stream. At the time of replacement, the contents of the melter are sent to a "Spent" melter stream. The glass remaining in the LAW melter at the end of the mission will be sent to the spent melter stream.

***Basis:*** The time required to replace a melter is accounted for in the assumed net production capacity based on two melters, each having a 5-year minimum design life per 24590-LAW-3PS-AE00-T0001 *Engineering Specification for Low Activity Waste Melters*. The volume of glass in the melter does not include an allowance for any increase in volume due to corrosion of refractory and reflects a set point of 6891 gallons; other contributions to source term such as plenum deposits are neglected.

### 7.3.3 ILAW Formulation and Packaging

The total sodium loading of LAW glass from pretreated feed will be determined using the DOE Model (D-03-DESIGN-004, *An Assessment of the Factors Affecting the Ability to Increase the Na2O Loading in the Waste Treatment and Immobilization Plant (WTP) Low Activity Waste (LAW) Glass*), which maximizes the sodium oxide loading in the LAW glass subject to the following constraints:

$$[Na_2O] \leq 20wt\%$$
$$[SO_3] \leq 0.8wt\%$$

The composition of the LAW glass will be estimated using a glass recipe model similar to that described in 24590-WTP-MRQ-PO-04-0065, *Model Run Request, Supplemental LAW Data Collection.*. Sulfate volatilization will be estimated using Equation 3.1-5f of 24590-WTP-RPT-PT-02-005.

***Basis:*** Sulfate tends to form a molten salt layer in the melter that will aggressively corrode the refractory lining and significantly reduce the operating life of the melter. In the absence of a separate molten layer, LAW glass could be formulated to contain 20 wt% $Na_2O$. Since the HTWOS model tracks the mass of analytes (components in the glass), density is used as a mass-to-volume conversion factor to estimate the size of the storage facility needed for the ILAW. The density of glass varies with the formulation, but the 2.6 MT/m$^3$ is used as a reasonable average value for planning purposes.

### 7.3.4 ILAW Glass Density

A glass density of 2.6 MT/m3 is assumed.

***Basis:*** The density of glass varies with the formulation, but the 2.6 MT/m$^3$ is used as a reasonable average value for planning purposes.

### 7.3.5 ILAW Package Mass

The ILAW package net mass is 5.92 MT.

***Basis:*** Each ILAW package will be filled with 5.92 MT of LAW glass.

### 7.3.6 ILAW Interim Storage Capacity

No lag storage of ILAW is assumed in WTP.

***Basis:*** No credit is being taken for any WTP-provided storage for cooling the IHLW canisters, nor for any WTP-provided buffer capacity.

# 8.0 LAW OFF-GAS TREATMENT SYSTEMS

This section describes the process, modeling and assumptions associated with the treatment of the LAW melter offgas.

## 8.1 LAW OFF-GAS TREATMENT PROCESS DESCRIPTION

The function of the LAW Primary Offgas Process (LOP) System and the Secondary Offgas/Vessel Vent Process (LVP) System is to treat gases generated by the LAW melter and LAW vessel vent systems. Treatment of these gases results in meeting air discharge permit limits. Required treatment of the gas before release consists of cooling, removing larger particulates and aerosols (> 1 μm), high-efficiency removal of submicron particulates and aerosols including radionuclides, removal of mercury (Hg), control of nitrogen oxides ($NO_x$) and carbon monoxide (CO) emissions, organic destruction, and removal of acid gases.

Separate systems are provided for the initial treatment of offgas from each melter. This is considered the primary offgas treatment system which consists of the Submerged bed scrubbers (SBS), the SBS condensate vessels, and the Wet electrostatic precipitator (WESP). The SBS removes particulates from the melter offgas and also cools the offgas to a desired temperature by using chilled water. Condensate produced and solids captured in the SBS column are removed periodically to the SBS condensate vessel. After the SBS, the gasses enter the WESP where aerosols and micron sized particulate are removed from the offgas stream.

The secondary offgas treatment system, from the HEPA filter preheater to final discharge, is designed to handle the maximum sustained flow rate from two melters. The system is also capable of operating effectively if only one melter is running. This treatment system removes almost all remaining particulates, mercury, $NO_x$, CO, VOCs, and miscellaneous acid gases. The Secondary Offgas Treatment System consists of the following:

- HEPA filters for particulate removal
- Activated carbon adsorbers, remove mercury, halides, and acid gases, including $^{129}I$, in the offgas by adsorption.
- Thermal Catalyst Oxidizer which removes nitrogen oxides ($NO_x$), carbon monoxide (CO) and volatile organics (VOCs) to meet the facilities' discharge limit.
- Selective catalytic reducer (SCR) which reduce nitrogen oxides ($NO_x$) in the offgas stream to nitrogen and water using ammonia.
- Caustic Scrubber which removes acid gases such as $SO_x$. It also provides offgas cooling.

The remaining condensate from the gaseous effluent scrubbing process will be sent to the LERF while the gaseous effluent will be discharged out the LAW Facility stack.

## 8.2 LAW OFF-GAS TREATMENT MODEL DESCRIPTION

The HTWOS LAW melter off-gas system is shown in Figure D-8 and unit operations and is comprised of the following equipment which is listed in Table B-3, along with the key parameters.

- Submerged-bed scrubber (HTWOS-LAW-SBS).
- SBS condensate vessel (HTWOS-LAW-SBS-CONDENSATE-VESSEL).
- Wet-electrostatic precipitator (WESP; HTWOS-LAW-WESP).
- Lag storage vessel for collecting liquid effluent from the WESP (LAG-STORAGE).
- Chemical adjustment vessel (HTWOS-V48009).
- Two stages of HEPA filtration (LAW-HEPA1 and LAW-HEPA2).
- Volatile organic carbon (VOC) scrubber (LAW-VOC-SCRUB).
- NOx scrubber (LAW-NOX-SCRUB).
- Caustic scrubber (HTWOS-LAW-CAUSTIC-SCRUBBER).
- Offgas stack (HTWOS-LAW-OFFGAS-STACK).
- Process chemical addition (HTWOS-SBS-CHEM-ADD; HTWOS-LAW-WESP-CHEM-ADD, HTWOS-V45009-CHEM-ADD).

The modeling of each LAW unit operation is described in the subsections below.

### 8.2.1 Submerged Bed Scrubber (LAW-SBS)

The HTWOS-LAW-SBS receives offgas from the LAW melter. Initially, the scrubbers are filled to their set volume with demineralized water. Entrained liquid and solid from the melter are split to the wet electrostatic precipitator (WESP) according to the split values given in Table A-4. The remaining liquid and solid materials undergo the following reactions (Table 8-1) to the extent indicated in the column labeled “conversion”.

**Table 8-1 LAW SBS Reactions**

| REACTION NAME | REACTION | CONVERSION |
|---|---|---|
| HCL-SCRUBBER-REACTION | 1.0 HCl(g) --> 1.0 H+(l) + 1.0 Cl-(l) | 0.83 |
| HF-SCRUBBER-REACTION | 1.0 HF(g) --> 1.0 H+(l) + 1.0 F-(l) | 0.83 |
| NH3-REACTION | 1.0 NH3(g) + 1.0 H2O(l) --> 1.0 NH4+(l) + 1.0 OH-(l) | 0.99 |
| NO2-SCRUBBER-REACTION | 3.0 NO2(g) + 1.0 H2O(l) --> 2.0 H+(l) + 2.0 NO3-(l) + 1.0 NO(g) | 0.003 |
| NO-SCRUBBER-REACTION | 4.0 NO(g) + 2.0 H2O(l) + 3.0 O2(g) --> 4.0 H+(l) + 4.0 NO3-(l) | 0.0539 |
| P2O5-SCRUBBER-REACTION | 1.0 P2O5(g) + 3.0 H2O(l) --> 6.0 H+(l) + 0.5 PO4-3(l) + 1.5 PO4-3(s) | 0.6154 |
| SO2-SCRUBBER-REACTION | 2.0 SO2(g) + 2.0 H2O(l) + 1.0 O2(g) --> 4.0 H+(l) + 2.0 SO4-2(l) | 0.98 |
| MAKE-OH-SCRUBBER-REACTION | 4.0 Na+(l) + 1.0 O2(g) + 2.0 H2O(l) --> 4.0 Na+(l) + 4.0 OH-(l) | 0.8184 |
| H-OH-NEUT-REACTION | 1.0 H+(l) + 1.0 OH-(l) --> 1.0 H2O(l) | 1 |

Air passing through the SBS exits at saturation conditions based on the SBS temperature and pressure. The amount of kg-moles of water in the vapor stream is calculated based on saturated conditions. The LAW-SBS volume is reset after the reactions are applied. Any volume that is above the set volume is pumped to the HTWOS-LAW-SBS-CONDENSATE-VESSEL or discharged to the effluent collection vessel (HTWOS-V45009).

The HTWOS-LAW-SBS-CONDENSATE-VESSEL fills to its set volume and then recycles back to the HTWOS-LAW-SBS. The condensables and particulates collected in the liquid effluent from the LAW-SBS and WESP are recycled to the treated LAW evaporator in the pretreatment plant via HTWOS-V45009.

### 8.2.2 Wet Electrostatic Precipitator (WESP)

Gases that exit the HLW-SBS are routed to the HTWOS-HLW-WESP. Upon arriving at the HLW-WESP, entrained liquid and solid are split to the HLW-HEME according to the split values given in Table A-6. Water is added to the WESP through HTWOS-WESP-LIQUID at a constant rate of 1.0 gpm at a throughput of less than 50 MTG/dy and 1.8 gpm for greater than 50 MTG/dy. The HLW WESP then performs the following reactions to the extent indicated in the column labeled "conversion".

**Table 8-2 LAW-WESP Reaction and Extents**

| REACTION NAME | REACTION | CONVERSION |
|---|---|---|
| P2O5-SCRUBBER-REACTION | 1.0 P2O5(g) + 3.0 H2O(l) --> 6.0 H+(l) + 0.5 PO4-3(l) + 1.5 PO4-3(s) | 0.6154 |
| LAW-NO-WESP-REACTION | 2.0 NO(g) + 1.0 O2(g) + 2.0 H2O(l) --> 4.0 H+(l) + 2.0 NO3-(l) | 0.01 |
| H-OH-NEUT-REACTION | 1.0 H+(l) + 1.0 OH-(l) --> 1.0 H2O(l) | 1 |

$H_2O$ is evaporated or condensed based on the mole fraction of $H_2O$ under saturated conditions of the offgas stream exiting the LAW WESP. Liquid condensate accumulates in the LAG-STORAGE and is recycled along with the LAW-SBS condensate to the to the TLP evaporator (via HTWOS-V45009). The gases exit the HTWOS-LAW-WESP and pass to the LAW-HEPA1.

### 8.2.3 LAW-HEPA1/2

The two-stage heap filtration system (LAW-HEPA1 and LAW-HEPA2) receives offgas from HTWOS-LAW-WESP. Liquid and solid components from the offgas feed are captured in HEPA1 at the 99.97% and in HEPA2 at 99.98% except for 129-I, 14-C, 3-H, $Al(OH)_4$ $Cr(OH)_4$, Hg, $MnO_2$, $MnO_4$, and TOC which are modeled as passing through the HEPA without being capture. The treated gas is routed to the LAW-VOC-SCRUB for removal of volatile organic chemicals.

### 8.2.4 LAW-VOC-SCRUB

The LAW-VOC-SCRUB removes organic chemicals by completely converting them to H2O, CO2, and inorganic salt according to the following reactions:

**Table 8-3 LAW-VOC-SCRUB Reactions and Extents**

| REACTION NAME | REACTION | CONVERSION |
|---|---|---|
| OD-1 | 1.0 C2O4-2(l) --> 2.0 CO2(g) | 1 |
| OD-2 | 1.0 C2H3O2-(l) + 1.75 O2(g) --> 2.0 CO2(g) + 1.5 H2O(g) | 1 |
| OD-3 | 4.0 CHO2-(l) + 1.0 O2(g) --> 4.0 CO2(g) + 2.0 H2O(g) | 1 |
| OD-4 | 1.0 C2H3O3-(l) + 1.25 O2(g) --> 2.0 CO2(g) + 1.5 H2O(l) | 1 |
| OD-5 | 1.0 C10H12N2O8-4(l) + 11.0 O2(g) --> 10.0 CO2(g) + 2.0 NO2(g) + 6.0 H2O(g) | 1 |
| OD-6 | 1.0 C10H15N2O7-3(l) + 12.25 O2(g) --> 10.0 CO2(g) + 2.0 NO2(g) + 7.5 H2O(g) | 1 |
| OD-7 | 1.0 C6H6(l) + 7.5 O2(g) --> 6.0 CO2(g) + 3.0 H2O(g) | 1 |
| OD-8 | 1.0 C6H5NO2(l) + 7.25 O2(g) --> 6.0 CO2(g) + 1.0 NO2(g) + 2.5 H2O(g) | 1 |

| | | |
|---|---|---|
| OD-9 | 1.0 C2HCl3(l) + 1.5 O2(g) + 1.0 H2O(l) --> 2.0 CO2(g) + 3.0 HCl(g) | 1 |
| OD-10 | 1.0 C2Cl4(l) + 1.0 O2(g) + 2.0 H2O(l) --> 2.0 CO2(g) + 4.0 HCl(g) | 1 |
| OD-11 | 1.0 C4H8O(l) + 5.5 O2(g) --> 4.0 CO2(g) + 4.0 H2O(g) | 1 |
| OD-12 | 1.0 C6H5O7-3(l) + 3.75 O2(g) --> 6.0 CO2(g) + 2.5 H2O(g) | 1 |
| OD-13 | 1.0 C13H28(l) + 20.0 O2(g) --> 13.0 CO2(g) + 14.0 H2O(g) | 1 |
| OD-14 | 1.0 C12H27O4P(l) + 18.0 O2(g) --> 12.0 CO2(g) + 0.5 P2O5(g) + 13.5 H2O(g) | 1 |
| OD-15 | 1.0 C5H5N(l) + 7.25 O2(g) --> 5.0 CO2(g) + 1.0 NO2(g) + 2.5 H2O(g) | 1 |
| OD-16 | 1.0 C4H10O(l) + 6.0 O2(g) --> 4.0 CO2(g) + 5.0 H2O(g) | 1 |
| OD-17 | 1.0 C3H6O(l) + 4.0 O2(g) --> 3.0 CO2(g) + 3.0 H2O(g) | 1 |
| OD-18 | 1.0 CHCl3(l) + 0.5 O2(g) + 1.0 H2O(l) --> 1.0 CO2(g) + 3.0 HCl(g) | 1 |
| OD-19 | 1.0 CH2Cl2(l) + 1.0 O2(g) --> 1.0 CO2(g) + 2.0 HCl(g) | 1 |
| OD-20 | 1.0 C7H8O(l) + 8.5 O2(g) --> 7.0 CO2(g) + 4.0 H2O(g) | 1 |
| OD-21 | 1.0 C7H6N2O4(l) + 8.5 O2(g) --> 7.0 CO2(g) + 2.0 NO2(g) + 3.0 H2O(g) | 1 |

### 8.2.5 LAW-NOX-SCRUBBER

The primary purpose of the LAW $NO_x$ Scrubber is to remove NO and $NO_2$ from the offgas. $NH_3$ gas is added through HTWOS-LAW-NOX-NH3 based on the amount of NO, $NO_2$, and $NH_3$ entering LAW-NOX-SCRUBBER. After the $NH_3$ has entered, the following reactions occur:

**Table 8-4 LAW-NOX-SCRUBBER Reactions and Extents**

| REACTION NAME | REACTION | CONVERSION |
|---|---|---|
| NO-NH3-REACTION | 6.0 NO(g) + 4.0 NH3(g) --> 5.0 N2(g) + 6.0 H2O(g) | 0.95 |
| NO2-NH3-REACTION | 6.0 NO2(g) + 8.0 NH3(g) --> 7.0 N2(g) + 12.0 H2O(g) | 0.95 |
| EXTRACT-NH3-REACTION | 1.0 NH3(l) --> 1.0 NH3(g) | 1 |

The LAW $NO_x$ Scrubber then captures 100% of the $C_2O_4$ (all other components are passed through).

### 8.2.6 LAW Caustic Scrubber

Upon arriving at the Caustic Scrubber, the entrained liquid and solid from the LAW NOx scrubber are routed to the Offgas Stack according to the split values given in Appendix A. Caustic solutions at pH 9 or above are pumped in from HTWOS-LAW-CAUSTIC-SCRUBBER-CHEM-ADD at 60 gpm flowrate. Reactions take place as follows:

**Table 8-5 LAW-CAUSTIC-SCRUBBER Reactions and Extents**

| REACTION NAME | REACTION | CONVERSION |
|---|---|---|
| CO2-SCRUBBER-REACTION | 1.0 CO2(g) + 1.0 H2O(l) --> 2.0 H+(l) + 1.0 CO3-2(l) | 0.1667 |
| EXTRACT-NH3-REACTION | 1.0 NH3(l) --> 1.0 NH3(g) | 1 |
| HCL-SCRUBBER-REACTION | 1.0 HCl(g) --> 1.0 H+(l) + 1.0 Cl-(l) | 0.83 |
| HF-SCRUBBER-REACTION | 1.0 HF(g) --> 1.0 H+(l) + 1.0 F-(l) | 0.83 |
| NO2-SCRUBBER-REACTION | 3.0 NO2(g) + 1.0 H2O(l) --> 2.0 H+(l) + 2.0 NO3-(l) + 1.0 NO(g) | 0.30 |
| P2O5-SCRUBBER-REACTION | 1.0 P2O5(g) + 3.0 H2O(l) --> 6.0 H+(l) + 0.5 PO4-3(l) + 1.5 PO4-3(s) | 0.6154 |
| SO2-SCRUBBER-REACTION | 2.0 SO2(g) + 2.0 H2O(l) + 1.0 O2(g) --> 4.0 H+(l) + 2.0 SO4-2(l) | 0.875 |
| H-OH-NEUT-REACTION | 1.0 H+(l) + 1.0 OH-(l) --> 1.0 H2O(l) | 1 |

The HTWOS-LAW-CAUSTIC-SCRUBBER is the final treatment unit before the stack (HTWOS-LAW-OFFGAS-STACK). The mass of chemicals exiting out of the stack and into the atmosphere are tracked by the HTWOS-LAW-OFFGAS-STACK-TOTALIZER. The mass of chemicals exiting out of the caustic scrubber to the liquid effluent disposal facility (LERF) are tracked by the HTWOS-LAW-CAUSTIC-SCRUBBER-TOTALIZER.

## 8.3 LAW OFF-GAS TREATMENT MODEL ASSUMPTIONS AND ISSUES

Off-gas system configuration and updated split factors for all unit operations are obtained from 24590-WTP-MDD-PR-01-002, *Dynamic (G2) Model Design Document*, Rev 8, with additional clarification provided by 24590-WTP-RPT-PT-02-005, Rev 3, and CCN-150375 *Comprehensive Review of the Hanford Waste Treatment Plant Flowsheet and Throughput, Assessment Conducted by an Independent Team of External Experts*.

# 9.0 HLW MELTER

This section describes the process and HTWOS modeling of the activities associated immobilizing HLW in a stable waste form (IHLW).

## 9.1 HLW MELTER PROCESS DESCRIPTION

The purpose of the HLW melter system process is to:

- store and sample waste,
- mix with glass formers,
- feed the melter, and
- convert liquid HLW into molten glass.

The HLW vitrification facility is designed with two melters, each with the capacity of 3 MTG/day or a total of 6 MTG/day is made with both melters operating.

The feed to the HLW melter consists of a blended waste slurry (solids from ultrafiltration, strontium/TRU precipitate, cesium concentrate) mixed with glass formers. The HLW melter feed process receives HLW concentrate from the PT facility in the Melter Feed Preparation Vessels (MFPV), mixes the waste slurry concentrate with glass formers , then pumps the feed slurry to the HLW Melter Feed Vessels (MFV). The MFVs then meter the feed to the melters at a specified rate. The HLP feed blend vessels provide concentrate to the two feed process trains which operate independently of each other and are dedicated to a specific melter.

Glass forming chemicals (and sucrose), are stored in silos at the HLW glass former handling facility and pneumatically transferred to the HLW glass former feed hoppers. Glass-forming chemicals include silica, ferric oxide, zinc oxide, titanium dioxide, zirconium silicate, lithium carbonate, boric acid, aluminum silicate, magnesium silicate, calcium silicate, (sucrose), sodium carbonate and borax (in mineral form). Each glass former feed hopper holds the blended glass formers required for a batch of melter feed (at 3 MTG/day). The glass formers are mixed with demineralized water in the glass former feed hoppers for dust mitigation, and then discharged via a rotary valve into the MFPV where they are blended with the HLW concentrate received from the pretreatment feed blend vessel.

Process control samples are collected from the MFPVs and analyzed to determine glass formulation. The glass formers from the HLW glass former feed hoppers are mixed in the MFPVs with the HLW concentrate from the HLW Feed Blend Vessels. After adequate mixing of glass formers and feed, the waste batch is again sampled and analyzed for waste compliance. Each vessel has two mechanical pumps to transfer waste to a HLW MFV.

The HLW melter receives feed slurry, consisting of HLW and glass formers, from the HLW melter feed vessel. When the feed enters the melter the material forms a “cold cap” layer on the surface of the glass pool within the melter. Within the cold cap several physical and chemical processes occur simultaneously as the feed material is heated from ambient to melter glass temperature. First, the water in the feed is evaporated, leaving a layer of dried waste and glass forming chemicals. The resulting steam exits the melter. As the temperature of the dried material continues to increase from heat transfer fed from the glass pool, various compounds decompose, oxides form, and gases are generated. As the temperature of cold-cap materials

continues to increase, the calcined feed materials dissolve into the upper surface of the glass pool and are swept away by convection glass currents, and become part of the homogenous melt blend. The glass is discharged into cylindrical stainless steel canisters, where it cools to form the IHLW form.

The melter generates gases that are drawn from the melter into the offgas treatment system. The melter offgas contains aerosols and entrained solid particulates. If the HLW melter pressure becomes positive with regard to cave pressure, radioactive gases and particulates may be released from the melter, which would bypass offgas unit operations. The melter offgas system is designed to provide a constant negative gauge pressure on the melter by using blowers to draw gases away from the melter. Additional details related to the HLW Offgas System are provided in Section 10.0

Approximately 20% of the 129I entering the melter will be retained in the HLW glass product and the remaining 80% will report to the melter off-gas system. The density of the HLW glass produced in the HLW melter is 2.7 MT/m3. Each HLW glass canister can hold 3.2 MT of IHLW. Twenty-two canisters will be accumulated in the WTP before any canisters are shipped to an interim storage location on the Hanford Site (interim storage is not modeled).

## 9.2 HLW MODEL DESCRIPTION

The WTP HLW melter system is shown in Figure D-9 and includes the following vessels or unit operations. These vessels/unit operations are listed in Table B-3, along with the key parameters.

- HLW pretreated-feed receipt tank (HTWOS-V21007).
- HLW glass formers supply hopper (HTWOS-T31101).
- HLW melter feed blending tank (HTWOS-V31101).
- HLW melter feed tank (HTWOS-V31102).
- HLW melter (HTWOS-HLW-MELTER-1).
- Two accumulation objects, one for the IHLW waste packaging (HTWOS-HLW-CANISTERS), and one for the melters removed from service (FAILED-HLW-MELTERS).

The WTP flowsheet consists of two HLW melter trains, each of which produces approximately 3 MTG/day. HTWOS models the multiple HLW melter process trains as a single process train capable of producing 6 MTG/day.

The HLW receipt tank (HTWOS-V21007) accepts HLW feed from the Pretreatment Plant Cs-IX unit process (HTWOS-CS-IX) and the ultrafilters (HTWOS-V12011A/B). Within the HLW melter system, pretreated HLW is combined with glass formers and fed to the melter. The Glass Formers workspace is shown in Figure D-7 and consists of twelve solid-chem-adds for the various glass former chemicals, listed below which are included in the model.

- ZnO
- $Fe_2O_3$
- Sucrose
- $SiO_2$
- $LiCO_3$
- $B_2O_3$
- $Al_2SiO_4$
- $MgSiO_3$
- $CaSiO_3$
- $TiO_3$
- $ZrSiO_4$
- $Na_2O$

The analyzer is programmed to add the glass formers to T31101 based on the desired glass formulation being used (see section 2.3.6.1 for a discussion of the glass formulation core function). The Glass Former Hopper, HTWOS-T31101 feeds the glass formers to the HLW melter feed tank (HTWOS-V31101) and subsequently to the HLW Melter (HTWOS-HLW-MELTER-1).

Because the WTP melters are identical, with the same functions and requirements, only one HLW melter operation is modeled in HTWOS (HTWOS-HLW-MELTER-1). This single melter has the total net treatment capacity of both the HLW melters that with an operating volume of 1800 gallons of melted glass.

A proportional integral controller (PI) is set to adjust the melter's throughput rate in MTG/d. The rate at which the melter operates varies throughout the mission. The PI controller totalizes the volume of melted glass transferred from the HLW melter to packaging every eight hours. The transferred volume is converted to a rate by use of the glass's density. The rate calculated is then compared to the operating rate set. If the calculated value and set value do not match, the PI controller adjusts the melter feed rate to maintain the desired rate.

When the feed enters the melter, splits are applied to the non-gas components. The split values are shown in Table A-5. After the material is routed to the off-gas system, the solid and liquid arrays are combined in the liquid array and the reactions listed below in Table 9-1 occur.

Since the HTWOS model tracks the mass of analytes (components in the glass), density is used as a mass-to-volume conversion factor to estimate the volume of IHLW produced. The density of glass varies with the formulation but an average value of 2.7 $MT/m^3$ is used as a reasonable value based on laboratory tests.

IHLW canisters are filled with 1.185 $m^3$ (313 gallons) of glass. The mass of that 1.185 $m^3$ of glass is 3.2 MT. The internal fill volume is based on filling the packages to 95 percent of the total internal volume on average. The internal fill volume has increased from that assumed in the last revision by the use of thin-walled canisters.

For the purposes of estimating secondary waste generation from HLW melter operations, one HLW melter is assumed to fail every 2.5 years, sending 823 gallons of glass to the spent-melter stream (FAILED-HLW-MELTERS) for each failure. The glass remaining in the HLW melter at the end of the mission also will be sent to the spent melter stream.

Table 9-1 **Chemical Reactions used in HTWOS to Simulate HLW Melter**

| Reaction Name | Reaction Stoichiometry | R |
|---|---|---|
| NEUT-REACTION | 1.0 H+(l) + 1.0 OH-(l) --> 1.0 H2O(l) | |
| SUGAR-NO3-DECOMPOSITION | 0.1 C12H22O11(gf) + 1.0 Na+(l) + 1.0 NO3-(l) --> 0.5 Na2O(o) + 0.5 N2(g) + 1.2 CO2(g) + 1.1 H2O(g) + 0.05 O2(g) | |
| SUGAR-NO2-DECOMPOSITION | 0.06 C12H22O11(gf) + 1.0 Na+(l) + 1.0 NO2-(l) --> 0.5 Na2O(o) + 0.5 N2(g) + 0.72 CO2(g) + 0.66 H2O(g) + 0.03 O2(g) | |
| NO3-DECOMPOSITION | 2.0 NO3-(l) --> 1.0 NO(g) + 1.0 NO2(g) + 1.5 O2(g) | |
| NO2-DECOMPOSITION | 2.0 NO2-(l) --> 1.0 NO(g) + 1.0 NO2(g) + 0.5 O2(g) | |
| CO3-DECOMPOSITION | 1.0 CO3-2(l) --> 1.0 CO2(g) + 0.5 O2(g) | |
| SO4-DECOMPOSITION | 1.0 SO4-2(l) --> 1.0 SO2(g) + 1.0 O2(g) | |
| OH-DECOMPOSITION | 2.0 OH-(l) --> 1.0 H2O(g) + 0.5 O2(g) | |
| NH3-DECOMPOSITION | 2.0 NH3(l) + 3.0 O2(g) --> 1.0 NO(g) + 1.0 NO2(g) + 3.0 H2O(g) | |
| SUGAR-DECOMPOSITION | 1.0 C12H22O11(gf) + 12.0 O2(g) --> 12.0 CO2(g) + 11.0 H2O(g) | |
| AG-OXIDE | 2.0 Ag+(l) + 0.5 O2(g) --> 1.0 Ag2O(o) | |
| AL-OXIDE | 2.0 Al+3(l) + 1.5 O2(g) --> 1.0 Al2O3(o) | |
| AL-OXIDE2 | 2.0 Al(OH)4-(l) --> 0.5 O2(g) + 1.0 Al2O3(o) + 4.0 H2O(g) | |
| AS-OXIDE | 2.0 As+5(l) + 2.5 O2(g) --> 1.0 As2O5(o) | |
| B-OXIDE | 2.0 B+3(l) + 1.5 O2(g) --> 1.0 B2O3(o) | |
| BA-OXIDE | 1.0 Ba+2(l) + 0.5 O2(g) --> 1.0 BaO(o) | |
| BE-OXIDE | 1.0 Be+2(l) + 0.5 O2(g) --> 1.0 BeO(o) | |
| BI-OXIDE | 2.0 Bi+3(l) + 1.5 O2(g) --> 1.0 Bi2O3(o) | |
| CA-OXIDE | 1.0 Ca+2(l) + 0.5 O2(g) --> 1.0 CaO(o) | |
| CD-OXIDE | 1.0 Cd+2(l) + 0.5 O2(g) --> 1.0 CdO(o) | |
| CE-OXIDE | 1.0 Ce+3(l) + 1.0 O2(g) --> 1.0 CeO2(o) | |
| CL-OXIDE | 1.0 Cl-(l) --> 1.0 Cl-(o) | |
| CO-OXIDE | 2.0 Co+3(l) + 1.5 O2(g) --> 1.0 Co2O3(o) | |
| CR-OXIDE | 2.0 Cr(TOTAL)(l) + 1.5 O2(g) --> 1.0 Cr2O3(o) | |
| CR-OXIDE2 | 2.0 Cr(OH)4-(l) --> 0.5 O2(g) + 1.0 Cr2O3(o) + 4.0 H2O(g) | |
| CS-OXIDE | 2.0 Cs+(l) + 0.5 O2(g) --> 1.0 Cs2O(o) | |
| CU-OXIDE | 1.0 Cu+2(l) + 0.5 O2(g) --> 1.0 CuO(o) | |
| FE-OXIDE | 2.0 Fe+3(l) + 1.5 O2(g) --> 1.0 Fe2O3(o) | |
| K-OXIDE | 2.0 K+(l) + 0.5 O2(g) --> 1.0 K2O(o) | |
| LA-OXIDE | 2.0 La+3(l) + 1.5 O2(g) --> 1.0 La2O3(o) | |
| LI-OXIDE | 2.0 Li+(l) + 0.5 O2(g) --> 1.0 Li2O(o) | |
| MG-OXIDE | 1.0 Mg+2(l) + 0.5 O2(g) --> 1.0 MgO(o) | |
| MN-OXIDE | 1.0 MnO4-(l) --> 1.0 MnO2(o) + 1.0 O2(g) | |
| MN-OXIDE2 | 1.0 Mn+4(l) + 1.0 O2(g) --> 1.0 MnO2(o) | |
| MN-OXIDE3 | 1.0 MnO2(l) --> 1.0 MnO2(o) | |
| MO-OXIDE | 1.0 Mo+6(l) + 1.5 O2(g) --> 1.0 MoO3(o) | |
| ND-OXIDE | 2.0 Nd+3(l) + 1.5 O2(g) --> 1.0 Nd2O3(o) | |
| NI-OXIDE | 1.0 Ni+2(l) + 0.5 O2(g) --> 1.0 NiO(o) | |

Table 9-1 **Chemical Reactions used in HTWOS to Simulate HLW Melter**

| Reaction Name | Reaction Stoichiometry | R |
|---|---|---|
| P-OXIDE | 2.0 PO4-3(l) --> 1.0 P2O5(o) + 1.5 O2(g) | |
| PB-OXIDE | 1.0 Pb+2(l) + 0.5 O2(g) --> 1.0 PbO(o) | |
| PU-OXIDE | 1.0 Pu+4(l) + 1.0 O2(g) --> 1.0 PuO2(o) | |
| RB-OXIDE | 2.0 Rb+(l) + 0.5 O2(g) --> 1.0 Rb2O(o) | |
| RH-OXIDE | 2.0 Rh+3(l) + 1.5 O2(g) --> 1.0 Rh2O3(o) | |
| RU-OXIDE | 2.0 Ru+3(l) + 1.5 O2(g) --> 1.0 Ru2O3(o) | |
| SB-OXIDE | 2.0 Sb+5(l) + 1.5 O2(g) --> 1.0 Sb2O3(o) | |
| SE-OXIDE | 1.0 Se+6(l) + 1.0 O2(g) --> 1.0 SeO2(o) | |
| SI-OXIDE | 1.0 Si+4(l) + 1.0 O2(g) --> 1.0 SiO2(o) | |
| S-OXIDE | 1.0 SO4-2(l) --> 1.0 SO3(o) + 0.5 O2(g) | |
| SR-OXIDE | 1.0 Sr+2(l) + 0.5 O2(g) --> 1.0 SrO(o) | |
| TC-OXIDE | 2.0 Tc+7(l) + 3.5 O2(g) --> 1.0 Tc2O7(o) | |
| TE-OXIDE | 1.0 Te+6(l) + 1.0 O2(g) --> 1.0 TeO2(o) | |
| TH-OXIDE | 1.0 Th+4(l) + 1.0 O2(g) --> 1.0 ThO2(o) | |
| TI-OXIDE | 1.0 Ti+4(l) + 1.0 O2(g) --> 1.0 TiO2(o) | |
| TL-OXIDE | 2.0 Tl+3(l) + 1.5 O2(g) --> 1.0 Tl2O3(o) | |
| U-OXIDE | 3.0 U(TOTAL)(l) + 4.0 O2(g) --> 1.0 U3O8(o) | |
| V-OXIDE | 2.0 V+5(l) + 2.5 O2(g) --> 1.0 V2O5(o) | |
| W-OXIDE | 1.0 W+6(l) + 1.5 O2(g) --> 1.0 WO3(o) | |
| ZN-OXIDE | 1.0 Zn+2(l) + 0.5 O2(g) --> 1.0 ZnO(o) | |
| ZR-OXIDE | 1.0 Zr+4(l) + 1.0 O2(g) --> 1.0 ZrO2(o) | |
| F-OXIDE2 | 2.0 F-(l) + 2.0 Na+(l) + 1.0 H2O(l) --> 1.0 Na2O(o) + 2.0 HF(g) | |
| F-OXIDE | 1.0 F-(l) --> 1.0 F-(o) | |
| CL-OXIDE2 | 2.0 Cl-(l) + 2.0 Na+(l) + 1.0 H2O(l) --> 1.0 Na2O(o) + 2.0 HCl(g) | |
| CL-OXIDE | 1.0 Cl-(l) --> 1.0 Cl-(o) | |
| NA-OXIDE | 2.0 Na+(l) + 0.5 O2(g) --> 1.0 Na2O(o) | |
| BOIL-WATER-REACTION | 1.0 H2O(l) --> 1.0 H2O(g) | |
| PR-OXIDE | 2.0 Pr+3(l) + 1.5 O2(g) --> 1.0 Pr2O3(o) | |
| Y-OXIDE | 2.0 Y+3(l) + 1.5 O2(g) --> 1.0 Y2O3(o) | |
| HG-OXIDE | 1.0 Hg+2(l) + 0.5 O2(g) --> 1.0 HgO(o) | |
| PD-OXIDE | 1.0 Pd+2(l) + 0.5 O2(g) --> 1.0 PdO(o) | |
| TA-OXIDE | 2.0 Ta+5(l) + 2.5 O2(g) --> 1.0 Ta2O5(o) | |
| CN-DECOMPOSITION | 2.0 CN-(l) + 2.0 O2(g) --> 2.0 CO2(g) + 1.0 N2(g) | |

## 9.3 HLW MELTER ASSUMPTIONS

### 9.3.1 HLW Melter Capacity

The HLW melter has a capacity of 1800 gallons.

***Basis:*** The volume of glass in the melter includes an allowance for an increase in volume due to the corrosion of refractory per 24590-HLW-M5C-HMP-00002, Table 2; other contributions to source term such as plenum deposits are neglected. Section C.7(b)(1)(ii) of the BNI contract requires HLW pretreatment to be sized to support 480 canisters of HLW glass per year. This also assumes that issues with ultrafilter performance identified in D-03-DESIGN-005, *HLW Feed Preparation System* have been successfully resolved.

### 9.3.2 IHLW Glass Density

The assumed average HLW glass density is 2.7 MT/$m^3$.

***Basis:*** The density of glass varies with the formulation but an average value of 2.7 MT/$m^3$ is used as a reasonable value based on laboratory tests.

### 9.3.3 IHLW Canister Mass

The assumed net mass of the IHLW canister is 3.2 MT.

***Basis:*** IHLW canisters are filled with 1.185 $m^3$ (313 gallons) of glass. The mass of that 1.185 $m^3$ of glass is 3.2 MT. The internal fill volume is based on filling the packages to 95 percent of the total internal volume on average. The internal fill volume has increased from that assumed in the last model revision by the use of thin-walled canisters

### 9.3.4 HLW Melter Replacement

One HLW melter is assumed to fail every 2.5 years, sending the contents of the melter to a spent-melter stream. At the time of each melter replacement 823 gallons of HLW glass are sent to a "spent" melter stream. The glass remaining in the HLW melter at the end of the mission will be sent to the spent melter stream.

***Basis:*** Melter failures are accounted for in the assumed net production capacity assumptions based on two melters, each having a 5-year minimum design life per 24590-HLW-3PS-AE00-T0001, *Engineering Specification for High Level Waste Melters*.

### 9.3.5 HLW Waste Oxide Loading Estimation

The Glass Properties Model (GPM) is modified as follows:

- Increase the maximum spinel liquidus temperature constraint from 1050 ºC to 1100 ºC.
- Increase the maximum viscosity constraint from 5.5 Pa•s to 10 Pa•s.
- Increase the maximum $Cr_2O_3$ constraint from 0.5 wt% to 1.0 wt%.
- Use a maximum zircon liquidus temperature limit of 1050 ºC.
- Use a Product Consistency Test (PCT) upper limit of 2 g/$m^2$.

***Basis:*** See section 2.3.6 for a description of the Glass Formulation.

### 9.3.6 IHLW Storage

The HTWOS model assumes no IHLW canisters will be interim-stored in WTP.

***Basis:*** No credit is being taken for any WTP-provided storage for cooling the IHLW canisters, nor for any WTP-provided buffer capacity.

# 10.0 HLW OFF-GAS TREATMENT SYSTEMS

This section describes the process, modeling and assumptions associated with the treatment of the LAW melter offgas.

## 10.1 HLW OFF-GAS TREATMENT PROCESS DESCRIPTION

Melter offgas generated from the HLW vitrification process consists primarily of:

- Air from melter bubbler operation, instrumentation, and in-leakage into the melters
- Air from film coolers
- Air from melter plenum pressure controls
- Water vapor evaporated from the melter feeds
- Acid gases generated from anion decomposition (such as CO, $CO_2$, $NO_x$, $SO_x$)
- Aerosols from dried melter feeds and melter cold-cap reaction solids

In addition, the HLW melters also generate small quantities of other volatile compounds. These include $^{14}C$, tritium, $^{129}I$, Cs, Tc, and various products of incomplete combustion (PICs) from oxidation or partial decomposition of organics in the form of VOCs and semi-volatile organics. The isotopes $^{14}C$ and tritium are assumed to be in the form of carbon dioxide and water, respectively.

The HLW Off-Gas Process (HOP) has separate systems for decontamination of the offgas for each melter. The HOP System is divided in two sections, the primary offgas treatment system and the secondary offgas treatment system. Each of the HOP primary system consists a film cooler, submerged bed scrubber (SBS), Wet electrostatic precipitator (WESP), vessel ventilation subsystem, High-efficiency mist eliminator (HEME), and a High-efficiency particulate air (HEPA) Filters with a HEPA electric preheater.

After exiting the HEPA filters, the offgas line is routed to a secondary offgas treatment system for each melter. The secondary offgas treatment system removes volatile organic compounds, nitrogen oxides, iodine-129, halides and mercury. This system removes or destroys the remaining chemical contaminants, allowing compliant offgas discharge from the stack. The secondary off-gas treatment system consists of the following equipment:

- Sulfur impregnated activated carbon adsorbers to remove mercury.
- Silver mordenite preheater and silver mordenite column to remove the $^{129-}I$ from the off-gas.
- Catalyst skid electric heater and Thermal catalytic oxidizer (TCO) to oxidize volatile organic compounds (VOCs) to carbon dioxide and water, and possibly acid gases.
- $NO_x$ Selective catalytic reducer (SCR) to convert nitrogen oxides ($NO_x$) to nitrogen and water with the help of ammonia.
- Stack extraction fans to provide the motive force for air movement of the melter offgas and the vessel ventilation offgas up to the stack and maintain the process offgas treatment system under a vacuum relative to the surroundings.

## 10.2 HLW OFF-GAS TREATMENT MODELING DESCRIPTION

The WTP HLW melter off-gas system is shown in Figure D-10 and includes the following vessels or unit operations, these vessels are listed in Table B-3, along with the key parameters.

- Submerged-bed scrubber (HTWOS-HLW-SBS).
- SBS condensate vessel (HTWOS-HLW-SBS-CONDENSATE-VESSEL).
- Wet electrostatic precipitator (HTWOS-HLW-WESP).
- High-efficiency mist eliminator (HTWOS-HLW-HEME).
- Two stages of HEPA filtration (HLW-HEPA1 and HLW-HEPA2).
- Volatile organic carbon (VOC) scrubber (HLW-VOC-SCRUB).
- NOx scrubber (HLW-NOX-SCRUB).
- Silver mordenite absorber column (HLW-AG-MORDENITE-COL).
- Offgas stack (HTWOS-HLW-OFFGAS-STACK).
- Process chemical addition (HTWOS-SBS-1-WATER; HTWOS-WESP-LIQUID, HTWOS-HEME-WATER ).

HTWOS models the WTP process (dual melter and offgas process trains) as a single melter and offgas process train.

### 10.2.1 Submerged Bed Scrubber (HLW-SBS)

The HTWOS-HLW-SBS receives offgas from the HLW melter. Initially, the scrubbers are filled to their set volume with demineralized water. Upon arriving at the HLW-SBS, entrained liquid and solid from the melter are split to the wet electrostatic precipitator (WESP) according to the split values given in Table A-6. The remaining liquid and solid materials undergo the following reactions to the extent indicated in the column labeled “conversion”.

**Table 10-1 HLW-SBS Reactions**

| REACTION NAME | REACTION | CONVERSION |
|---|---|---|
| HCL-SCRUBBER-REACTION | 1.0 HCl(g) --> 1.0 H+(l) + 1.0 Cl-(l) | 0.83 |
| HF-SCRUBBER-REACTION | 1.0 HF(g) --> 1.0 H+(l) + 1.0 F-(l) | 0.83 |
| NH3-REACTION | 1.0 NH3(g) + 1.0 H2O(l) --> 1.0 NH4+(l) + 1.0 OH-(l) | 0.99 |
| NO2-SCRUBBER-REACTION | 3.0 NO2(g) + 1.0 H2O(l) --> 2.0 H+(l) + 2.0 NO3-(l) + 1.0 NO(g) | 0.003 |
| NO-SCRUBBER-REACTION | 4.0 NO(g) + 2.0 H2O(l) + 3.0 O2(g) --> 4.0 H+(l) + 4.0 NO3-(l) | 0.0539 |
| P2O5-SCRUBBER-REACTION | 1.0 P2O5(g) + 3.0 H2O(l) --> 6.0 H+(l) + 0.5 PO4-3(l) + 1.5 PO4-3(s) | 0.6154 |
| SO2-SCRUBBER-REACTION | 2.0 SO2(g) + 2.0 H2O(l) + 1.0 O2(g) --> 4.0 H+(l) + 2.0 SO4-2(l) | 0.98 |
| MAKE-OH-SCRUBBER-REACTION | 4.0 Na+(l) + 1.0 O2(g) + 2.0 H2O(l) --> 4.0 Na+(l) + 4.0 OH-(l) | 0.8184 |
| H-OH-NEUT-REACTION | 1.0 H+(l) + 1.0 OH-(l) --> 1.0 H2O(l) | 1 |

Air passing through the SBS exits at saturation conditions based on the SBS temperature and pressure. Water is condensed or evaporated based on the mole fraction of $H_2O$ in the offgas stream exiting the HLW SBS at saturation conditions. The gaseous effluent leaving the SBS is routed to the HLW-WESP.

The HTWOS-HLW-SBS-CONDENSATE-VESSEL fills to its set volume and then recycles back to the HTWOS-HLW-SBS if water is needed to complete the reactions. The condensables and particulates collected in the liquid effluent from the HLW-SBS and WESP are also recycled to the FEP evaporator via HTWOS-V35002 (in PT-550). When feed is unavailable to the melter, water vapor entering the HLW-SBS is dramatically reduced causing the water in HLW-SBS to evaporate. Under this circumstance, the HLW-SBS water chem-add will be utilized to replenish the scrubber column. The HLW-SBS volume is reset after the reactions are applied. Any volume that is above the set volume is pumped to the HTWOS-HLW-SBS-CONDENSATE-VESSEL. The HTWOS-HLW-SBS-CONDENSATE-VESSEL also receives condensate from the HLW-WESP, and HLW high-efficiency mist eliminator-(HEME).

### 10.2.2 Wet Electrostatic Precipitator (WESP)

Gases that exit the HLW-SBS are routed to the HTWOS-HLW-WESP. Upon arriving at the HLW-WESP, entrained liquid and solid are split to the HLW-HEME according to the split values given in Table A-6. Water is added to the WESP through HTWOS-WESP-LIQUID at a constant rate of 0.80 gpm. The HLW WESP then performs the following reactions to the extent indicated in the column labeled “conversion”.

**Table 10-2 HLW-WESP Reactions and Extents**

| REACTION NAME | REACTION | CONVERSION |
|---|---|---|
| P2O5-SCRUBBER-REACTION | 1.0 P2O5(g) + 3.0 H2O(l) --> 6.0 H+(l) + 0.5 PO4-3(l) + 1.5 PO4-3(s) | 0.6154 |
| LAW-NO-WESP-REACTION | 2.0 NO(g) + 1.0 O2(g) + 2.0 H2O(l) --> 4.0 H+(l) + 2.0 NO3-(l) | 0.01 |
| H-OH-NEUT-REACTION | 1.0 H+(l) + 1.0 OH-(l) --> 1.0 H2O(l) | 1 |

$H_2O$ is evaporated or condensed based on the mole fraction of $H_2O$ under saturated conditions of the offgas stream exiting the HLW WESP. Liquid condensate accumulates in HTWOS-HLW-SBS-CONDENSATE-VESSEL and is recycled to the HLW-SBS and to the FEP evaporator. The gases exit the HTWOS-HLW-WESP and pass to the HTWOS-HLW-HEME and the precipitate flows to the corresponding HTWOS-HLW-SBS-CONDENSATE-VESSEL.

### 10.2.3 High-Efficiency Mist Eliminator (HEME)

Gases that leave the HTWOS-HLW-WESP are routed to the HTWOS-HLW-HEME. Upon arriving at the HLW-HEME, entrained liquid and solid are split to the HEPA filtration train (HLW-HEPA1 and HLW-HEPA2) according to the split values given in Table A-6. Water is added to the HLW HEME through HTWOS-HEME-WATER (a chem-add) at a rate of 0.1 gpm. The HEME then performs the following reactions to the extent indicated in the column labeled “conversion”:

**Table 10-3 HLW-HEME Reactions and Extents**

| REACTION NAME | REACTION | CONVERSION |
|---|---|---|
| P2O5-SCRUBBER-REACTION | 1.0 P2O5(g) + 3.0 H2O(l) --> 6.0 H+(l) + 0.5 PO4-3(l) + 1.5 PO4-3(s) | 0.6154 |
| CONDENSE-WATER-REACTION | 1.0 H2O(g) --> 1.0 H2O(l) | 0.95 |

Ninety-five percent of the water in the incoming gaseous stream is condensed to liquid water (Table 10-3). The remaining material is routed to the HTWOS-HLW-SBS-CONDENSATE-

VESSEL. The gases exiting the HLW-HEME are routed to a high-efficiency particulate air (HEPA) filtration system.

### 10.2.4 HLW-HEPA1/2

The two-stage heap filtration system (HLW-HEPA1 and HLW-HEPA2) receives offgas from HTWOS-HLW-HEME. Liquid and solid components from the offgas feed are captured at 99.97% for HLW-HEPA1 and at 99.98% for HLW-HEPA2. The exception to this is for 129-I, 14-C, 3-H, $Al(OH)_4$ $Cr(OH)_4$, Hg, $MnO_2$, $MnO_4$, and TOC which are modeled as passing through the HEPA without capture. The treated gas is routed to the HLW-VOC-SCRUB for removal of volatile organic chemicals.

### 10.2.5 HLW-VOC-SCRUB

Upon arriving at the HLW-VOC-SCRUB, entrained liquid and solid are split to the HLW-AG-MORDENITE-COL according to the split values given in Table A-6. The HLW-VOC-SCRUB than removes organic chemicals by completely converting them to H2O, CO2, and inorganic salt according to the following reactions:

**Table 10-4 HLW-VOC-SCRUB Reactions and Extents**

| REACTION NAME | REACTION | CONVERSION |
|---|---|---|
| OD-1 | 1.0 C2O4-2(l) --> 2.0 CO2(g) | 1 |
| OD-2 | 1.0 C2H3O2-(l) + 1.75 O2(g) --> 2.0 CO2(g) + 1.5 H2O(g) | 1 |
| OD-3 | 4.0 CHO2-(l) + 1.0 O2(g) --> 4.0 CO2(g) + 2.0 H2O(g) | 1 |
| OD-4 | 1.0 C2H3O3-(l) + 1.25 O2(g) --> 2.0 CO2(g) + 1.5 H2O(l) | 1 |
| OD-5 | 1.0 C10H12N2O8-4(l) + 11.0 O2(g) --> 10.0 CO2(g) + 2.0 NO2(g) + 6.0 H2O(g) | 1 |
| OD-6 | 1.0 C10H15N2O7-3(l) + 12.25 O2(g) --> 10.0 CO2(g) + 2.0 NO2(g) + 7.5 H2O(g) | 1 |
| OD-7 | 1.0 C6H6(l) + 7.5 O2(g) --> 6.0 CO2(g) + 3.0 H2O(g) | 1 |
| OD-8 | 1.0 C6H5NO2(l) + 7.25 O2(g) --> 6.0 CO2(g) + 1.0 NO2(g) + 2.5 H2O(g) | 1 |
| OD-9 | 1.0 C2HCl3(l) + 1.5 O2(g) + 1.0 H2O(l) --> 2.0 CO2(g) + 3.0 HCl(g) | 1 |
| OD-10 | 1.0 C2Cl4(l) + 1.0 O2(g) + 2.0 H2O(l) --> 2.0 CO2(g) + 4.0 HCl(g) | 1 |
| OD-11 | 1.0 C4H8O(l) + 5.5 O2(g) --> 4.0 CO2(g) + 4.0 H2O(g) | 1 |
| OD-12 | 1.0 C6H5O7-3(l) + 3.75 O2(g) --> 6.0 CO2(g) + 2.5 H2O(g) | 1 |
| OD-13 | 1.0 C13H28(l) + 20.0 O2(g) --> 13.0 CO2(g) + 14.0 H2O(g) | 1 |
| OD-14 | 1.0 C12H27O4P(l) + 18.0 O2(g) --> 12.0 CO2(g) + 0.5 P2O5(g) + 13.5 H2O(g) | 1 |
| OD-15 | 1.0 C5H5N(l) + 7.25 O2(g) --> 5.0 CO2(g) + 1.0 NO2(g) + 2.5 H2O(g) | 1 |
| OD-16 | 1.0 C4H10O(l) + 6.0 O2(g) --> 4.0 CO2(g) + 5.0 H2O(g) | 1 |
| OD-17 | 1.0 C3H6O(l) + 4.0 O2(g) --> 3.0 CO2(g) + 3.0 H2O(g) | 1 |
| OD-18 | 1.0 CHCl3(l) + 0.5 O2(g) + 1.0 H2O(l) --> 1.0 CO2(g) + 3.0 HCl(g) | 1 |
| OD-19 | 1.0 CH2Cl2(l) + 1.0 O2(g) --> 1.0 CO2(g) + 2.0 HCl(g) | 1 |
| OD-20 | 1.0 C7H8O(l) + 8.5 O2(g) --> 7.0 CO2(g) + 4.0 H2O(g) | 1 |
| OD-21 | 1.0 C7H6N2O4(l) + 8.5 O2(g) --> 7.0 CO2(g) + 2.0 NO2(g) + 3.0 H2O(g) | 1 |

### 10.2.6 HLW-AG-MORDENITE-COL

The offgas leaving the VOC scrubber are routed to the Silver Mordenite Absorption Column (HLW-AG-MORDENITE-COL) where solid material is removed, based on the splits provided

in Table A-6, and HF and HCl gases are treated in accordance with the following reactions and conversions.

**Table 10-5 HLW-AG-MORDENITE-COL Reactions and Extents**

| REACTION NAME | REACTION | CONVERSION |
|---|---|---|
| HCL-SCRUBBER-REACTION | 1.0 HCl(g) --> 1.0 H+(l) + 1.0 Cl-(l) | 0.999 |
| HF-SCRUBBER-REACTION | 1.0 HF(g) --> 1.0 H+(l) + 1.0 F-(l) | 0.999 |

The treated gases exit HLW-AG-MORDENITE-COL and are routed to the HLW $NO_x$ Scrubber.

### 10.2.7 HLW-NOX-SCRUBBER

The primary purpose of the HLW $NO_x$ Scrubber is to remove NO and $NO_2$ from the offgas. The only spilt applied to the HLW_NOX-SCRUB is for $C_2O_4^{-2}$ which is set of 99.999% (see Table A-6). $NH_3$ gas is added through HTWOS-HLW-NOX-NH3 (a chem.-add) based on the amount of NO, $NO_2$, and $NH_3$ entering HLW-NOX-SCRUBBER. After the $NH_3$ has entered, the following reactions occur:

**Table 10-6 HLW-NOX SCRUBBER Reactions and Extent**

| REACTION NAME | REACTION | CONVERSION |
|---|---|---|
| NO-NH3-REACTION | 6.0 NO(g) + 4.0 NH3(g) --> 5.0 N2(g) + 6.0 H2O(g) | 0.95 |
| NO2-NH3-REACTION | 6.0 NO2(g) + 8.0 NH3(g) --> 7.0 N2(g) + 12.0 H2O(g) | 0.95 |

The HLW-NOX-SCRUBBER is the final treatment unit before the stack (HTWOS-HLW-OFFGAS-STACK). The mass of chemicals exiting out of the stack and into the atmosphere are tracked by the HTWOS-HLW-OFFGAS-STACK-TOTALIZER.

## 10.3 HLW OFF-GAS ASSUMPTIONS AND ISSUES

Off-gas system configuration and updated split factors for all unit operations are obtained from 24590-WTP-MDD-PR-01-002, Rev 8, with additional clarification provided by 24590-WTP-RPT-PT-02-005, Rev 3, “Flowsheet Bases, Assumptions, and Requirements” And CCN-150375.

# 11.0 EFFLUENT COLLECTION RECYCLE & DISPOSAL

This section describes the activities associated with collection of liquid effluent within the WTP for recycling back to the pretreatment process and for gaseous discharge to the atmosphere (stack) and liquid discharge to the Liquid Effluent Retention Facility (LERF) and subsequent treatment at the Effluent Treatment Facility (ETF).

## 11.1 PROCESS DESCRIPTION

### 11.1.1 Plant Wash and Disposal

The primary function of the plant wash & disposal is to collect process recycle streams and wash solutions from selected systems within the PT, LAW, and HLW facilities and recycle them to the waste feed evaporator (FEP). The plant wash & disposal system also includes the ultimate overflow vessel and sumps for the pretreatment building.

The plant wash & disposal system is composed of five vessels with dedicated influent lines. These vessels are primarily concerned with the collection of solutions that will be recycled to the process through the FEP evaporation process. The waste solutions are collected in the plant wash & disposal vessels depending on process origination and pH. The pH is measured by sample analysis. The plant wash & disposal has the capability to add sodium hydroxide (19 M NaOH), if necessary, to neutralize acidic effluents or to maintain the free hydroxide concentration to avoid precipitation reactions. Once the proper pH is achieved, the waste will be sent to the FEP feed tank for recycle into the process. These three vessels are mixed in a ratio so that the evaporator inlet should be either a sodium concentration of greater than 5M or weight percent solids of less than 8.9. The 8.9 percent solid bounding condition is based on hydrogen generation calculation.

Most of the wastes received into the plant wash & disposal are HLW offgas condensate and purge solution, ultrafilter wash solution, ultrafilter cleaning solution, ion exchange wash effluents, eluate evaporator condensate, pretreatment offgas condensate and purge solutions, and vessel wash solutions.

### 11.1.2 Radioactive Liquid Waste Disposal

The primary function of the radioactive liquid waste disposal is to collect and store liquid effluents to be transfer out of the pretreatment facility for disposal off of the WTP site. The radioactive waste disposal system collects process condensates for use as process wash and dilution streams and collects low active and potentially hazardous waste from the WTP for disposal to the LERF/ETF.

The radioactive liquid waste disposal system is composed of four vessels with dedicated influent lines. The radioactive liquid waste disposal system vessels/tanks are primarily concerned with the collection of solutions that may be discharged to LERF/ETF. Most of the wastes received are process condensates from evaporators, caustic waste from the LAW caustic scrubber, and spent reagents from the resin addition process.

### 11.1.3 LERF/ETF

The LERF is used to store and treat aqueous waste generated on the Hanford Site from a variety of remediation and waste management activities. The LERF consist of three lined and covered surface reservoirs with a nominal capacity of 7.8 million gallons in each basin.

The ETF consists of a series of process units that are configured to provide treatment for contaminates that might be present in aqueous waste generated on the Hanford Site. The main treatment train includes process units that remove or destroy dangerous and radioactive constituents from the aqueous waste. These constituents are concentrated and dried into a powder in the secondary treatment train.

The treated effluent is contained in verification tanks where the effluent is sampled, analyzed, and verified to be below release limits before discharge. The treated effluent is discharged under a state waste discharge permit and final delisting petition to the state approved disposal site (SALDS) located in the 600 Area. The treated effluent is discharged as a nondangerous delisted waste.

## 11.2 MODEL DESCRIPTION

### 11.2.1 HTWOS System 550 Effluent Collection

The WTP pretreatment effluent collection and recycle system (Figure D-11) consists of the following:

- Two pretreatment system effluent collection vessels (HTWOS-V15013 and HTWOS-V15018) with chemical addition.
- One HLW off-gas effluent collection vessel (HTWOS-V35002).
- One HLW off-gas effluent chemical adjustment vessel (HTWOS-V15009).

The input feed into system PT 550 are two recycle streams from the ultrafilter wash solution and ultrafilter cleaning solution (from HTWOS-V12011A/B) and one recycle stream from the HLW SBS condensate (HTWOS-HLW-SBS). The waste is chemically adjusted and recycled back to the LAW and HLW Feed tanks (HTWOS-LAW-FEED and HTWOS-HLW-FEED) and subsequently to the FEP evaporator.

### 11.2.2 HTWOS WTP Condensate/Stack Emissions

The WTP pretreatment off-gas collection and discharge system (Figure D-12) consists of the following:

- an off-gas stack (WTP-STACK),
- two LERF collection basins (LERF-BASIN-1 & 2),
- an ETF splitter block where the ETF splits are applied
- two accumulation tanks ETF-LIQUID-EFFLUENT and ETF-SOLID-EFFLUENT used to total the solid and liquid portions disposed through ETF.
- ETF-SOLID-WASTE-DRUM used to total the number of 55 gallon drums produced.

The HTWOS WTP Condensate/Stack Emissions receives liquid and gaseous waste from several PT, HLW, LAW and supplemental treatment sources:

- Gaseous emissions from the FEP (V41001) and TLP (V41011) evaporators
- Gaseous and liquid emissions from the aluminum lithium precipitation (not in use).
- Liquid emissions to LERF from the FEP (V41001) and TLP (V41011) evaporators
- Liquid emissions to LERF from the LAW caustic scrubber (HTWOS-LAW-CAUSTIC-SCRUBBER).
- HLW Canister Wash Water from HTWOS-HLW-CANISTER
- Condensate from the East BV dryer (EAST-BV-DRYER-CONDENSER) and scrubber (EAST-BV-HYDROSONIC-SCR).

- Condensate from West BV dryer (WEST-BV-DRYER-CONDENSER) and scrubber (WEST-BV-HYDROSONIC-SCR).
- Condensate from West demonstration BV dryer (WD-BV-DRYER-CONDENSER) and scrubber (WD-BV-HYDROSONIC-SCR).
- Condensate from supplemental TRU sludge processing (SUPP-TRU-DRYER-CONDENSER).
- Condensate from the 242-A evaporator

The PT gaseous effluent is routed to the WTP stack and the liquid condensate is collected in ETF liquid and solid accumulation tanks (ETF-LIQUID-EFFLUENT, ETF-SOLID-EFFLUENT) for summation.

The gaseous effluent received from the PT evaporators is totalized and routed out the WTP-Stack. The LERF/ETF is modeled as a black box. All of the liquid condensate from the various sources is collected in the two LERF-BASIN-1 & 2. The LERF is modeled as two basins, each with a 7.8 Mgal volume, used to provide lag storage of liquid effluents from the various treatment processes. One is used to accumulate effluents while the other is used to feed the ETF. The ETF splits are applied which are presented in Table A-7 which partition the feed into solid and treated liquid waste. The liquid portion accumulates in the ETF-LIQUID-EFFLUENT tank and the solids accumulate in the ETF-SOLID-EFFLUENT tank. A data logger is used to calculate the number of 55-gallon solid waste drums produced each year.

The SALDS will not be modeled explicitly; however, the demand on the SALDS from ETF will be estimated

## 11.3 EFFLUENT COLLECTION, RECYCLE, AND DISPOSAL ASSUMPTIONS

### 11.3.1 ETF and LERF Capacity

The Effluent Treatment Facility (ETF) capacity will not constrain the Tank Farm, supplemental treatment, or WTP operations. The processing rate may be varied at the discretion of the modeler.

***Basis:*** The HTWOS model assumes that the ETF capacity will not constrain the model and will not impact the overall mission.

### 11.3.2 ETF Partitioning

Overall partitioning of feed into solid waste and treated effluent are given in Table A-7.

***Basis:*** Overall partitioning of feed into solid waste and treated effluent is approximated using overall removal efficiencies for the reverse osmosis and ion exchange units (the polisher outlet). The values used are reported in HNF-4573, *Liquid Effluent "Retention Facility Basin 44 Process Test Post-Report*, Appendix A.

### 11.3.3 Oxide Solids Removal

99.999% of the oxide solids will be removed in the ETF.

***Basis***: TBD

# 12.0 SUPPLEMENTAL TRANSURANIC WASTE TREATMENT SYSTEM

## 12.1 SUPPLEMENTAL TRU TREATMENT PROCESS DESCRIPTION

The purpose of the supplemental TRU treatment system is to prepare the TRU tank waste for shipment and disposal at the Waste Isolation Pilot Plant (WIPP). Doing so will avoid the increase in HLW glass mass, and treatment and disposal costs that would result if this TRU waste sere immobilized in the WTP along with the HLW. As many as 20 tanks (17 SST and 3 DST) contain waste that is classified as TRU and might qualify for disposal at WIPP.

Supplemental TRU treatment compromises both contact-handled transuranic mixed waste (CH-TRU) and remote-handled transuranic mixed waste (RH-TRU) processes. Eleven of the tanks are projected to yield a low-dose, contact-handled product and nine tanks are projected to yield a higher-dose, remote handled product.

The CH-TRU process will use mobile, skid mounted process equipment. The facility will be first located adjacent to B-Farm, the tank farm supplying the initial CH-TRU waste feed and then will be relocated to T-Farm, which supplies the remaining CH-TRU feed.

The waste feed receipt system consists of five 8,000-gal (nominal) carbon steel tanks which provide the required feed in batches to the dewatering system. The TRU dewatering system uses a rotary dryer-mixer similar in design to that being used for the bulk vitrification processes to remove water from the TRU sludge. A flowability agent (vermiculite) is added during startup of the dryer, and a scouring agent (sand) is added during steady-state operation. The dried product, consisting of about 10 wt% water, 10 wt% sand, and the remainder TRU sludge, is packaged in 55-gallon drums for eventual disposal at WIPP. Condensate from the mixer-dryer is filtered and then discharged to LERF/ETF or can be reused to retrieve and transport additional TRU sludge. Off-gas is filtered and discharged to the atmosphere.

The RH-TRU process is the same as the CH-TRU process; however, the RH-TRU sludge will be water washed to remove soluble high-level waste components before drying. The RH-TRU from DSTs will be water-washed in AW-Farm; and the RH-TRU from B-Farm and T-Farm will be water washed in the adjacent WRF. The RH-TRU will be packaged directly into a RH-TRU waste canister.

An Interim Storage (IS) Facility will be provided adjacent to each CH-TRU or RH-TRU facility to enable packaged wastes to be staged prior to shipment to either the Central Waste Complex (CWC) for the CH-TRU waste or to WIPP for RH-TRU waste.

## 12.2 SUPPLEMENTAL TRU TREATMENT MODEL DESCRIPTION

The supplemental TRU sludge processing HTWOS workspace is shown in Figure D-13 and consists of the following objects (see Table B-3 for the vessel volumes/parameters):

- HTWOS-SUP-TRU-INTERFACE, virtual feed tank and logic controls for the CH-TRU and RH-TRU feed.
- SUP-TRU-FEED1, SUP-TRU-FEED2, SUP-TRU-FEED3, SUP-TRU-FEED4, SUP-TRU-FEED5, waste receipt tanks for the CH-TRU and RH-TRU feed.

- SUP-TUR-ADDITIVES, adds sand and vermiculite to the waste.
- SUP-TRU-DRYER, acts as an evaporator to dry the waste.
- SUPP-TRU-DRYER-CONDENSER condenses and cools the off-gas from the dryer.
- SUPP-TRU-DRYER-AIR, air input to the condenser.
- CONTACT-SUPP-TRU-PACKAGES, accumulates the dried CH-TRU product.
- REMOTE-SUPP-TRU-PACKAGES, accumulates the dried RH-TRU product.

The process flowsheet for the CH-TRU sludge treatment is described in RPP-21970, *CH-TRUM WPU&SE 11-Tank Material Balance* Rev. 0. For modeling purposes, the two dryers are lumped into one dryer of equivalent treatment capacity. The same flowsheet is used for processing the water-washed sludge from the RH-TRU Tanks in HTWOS.

The waste is sent to the supplemental TRU sludge processing based on the feed delivery and preparation logic defined by the assumptions (Section 12.3). The slurry is transferred to the Feed Receipt Process System modeled as five tanks, each with a working volume of 7,200 gallons: SUP-TRU-FEED1, SUP-TRU-FEED2, SUP-TRU-FEED3, SUP-TRU-FEED4, or SUP-TRU-FEED5. A single dryer unit is modeled for both the RH-TRU and the CH-TRU. The feed is introduced into the SUP-TRU-DRYER. SUP-TRU-ADDITIVES add the vermiculite and sand at a the rate described in 12.3.4. The SUP-TRU-DRYER is modeled as a split evaporator removing moisture from the waste. The slurry, carrier and heat are continuously added to the dryer, while dried product is withdrawn to maintain a product with 10 wt% water and 80 wt% waste loading (both relative to waste, water and carrier). The process splits in Table A-8 are applied to SUP-TRU-DRYER. The condensate from the dryer is sent to a condenser (SUP-TRU-DRYER-CONDENSER) where the splits (Table A-8) are applied and water is condensed based on saturated conditions. Air is added to the condenser (SUPP-TRU-DRYER-AIR) at 300 $ft^3$/min. It is assumed that the liquid effluent is transferred only to LERF (no recycle) and modeled as a continuous transfer. The condensate is sent to LERF via the HTWOS WTP Condensate/Stack Emissions (Section 11.0) and the air is emitted through the SUPP-TRU-STACK at 14.7 psi and 77 $^{o}$F.

The dryer product is accumulated in either the CONTACT-SUPP-TRU-PACKAGES object for the CH-TRU or in the REMOTE-SUPP-TRU-PACKAGES object for the RH-TRU where drums/canisters are totaled.

## 12.3 SUPPLEMENTAL TRU SLUDGE PROCESSING ASSUMPTIONS AND ISSUES

### 12.3.1 CH-TRU Sludge Packaging Delivery

The CH Supplemental TRU Treatment and Packaging process will be available on 10/1/2013 to process waste from the 200-Series SSTs listed below. There will be a 10 day outage between tanks and a 60-day outage to move equipment between farms.

- Tanks [B-201, B-202, B-203, B-204], [T-201, T-202, T-203, T-204], T-111, T-110, and T-104 will be retrieved and sent for packaging as CH-TRU. The tanks will be retrieved and packaged in the stated order except that the tank order within the [brackets] can be changed.

- The waste from the B-200 and T-200 series SSTS, T-104, T-110, and T-111 will be retrieved using the volume of retrieval water needed to achieve the as-retrieved volume given in Table 3-4 without impact to DST space (i.e., no liquids are returned to the DST system).

It is assumed that this waste can be treated and packaged as contact-handled TRU and disposed of at WIPP. There will be no water or waste sent to the DST system.

There will be no water or waste sent to the DST system.

***Basis:*** The schedule for the CH-TRU treatment is based on the RPP System Plan Rev. 3 assumptions (B2.4.6).

### 12.3.2 RH-TRU Sludge Packaging Delivery

The RH Supplemental TRU Treatment and Packaging process will be available on 5/9/2025. The process will be mobile and located near the tank farm where the RH-TRU waste is located, i.e., AW-Farm, B-Farm, and T-Farm. The processing will follow the schedule below and the feed preparation is described in 12.3.3.

- The solids in tank SY-102 will be moved across the site as soon as the waste currently in tank AN-104 has been moved out and will be combined with the solids in tank AW-105 or AW-103 as space allows.
- Supernatant liquid will be decanted from tank AW-103 when sufficient DST space is available after June 2024.
- Supernatant liquid will be decanted from tank AW-105 after July 2025 and following the AW-103 washing as DST space allows. Washing of the waste solids in tank AW-105 will begin 8/9/2025.
- Following the DST sludge packaging, tanks B-107, B-110, and B-111 will be retrieved to the B-Complex WRF and the waste will be washed and packaged.
- After packaging the RH-TRU waste from the B-Farm SSTs, the waste from tanks T-105, T-107, and T-112 will be washed and packaged via the T-Complex WRF.

***Basis:*** The schedule for the CH-TRU treatment is based on the RPP System Plan Rev. 3 assumptions (B2.4.6).

### 12.3.3 RH-TRU Feed Preparation

All remote-handled sludge will be water-washed prior to treatment to remove soluble waste constituents. The waste solids in each DST or WRF will be washed four times over a nine-month period, or as tank space allows, using one gallon of 0.01 M NaOH solution for each gallon of the initial bulk settled solids for each wash. After each wash, the solids are settled to 40 wt% before decanting the wash solution for feed to the evaporator. The first wash of the waste solids in is assumed to dissolve the saltcake portion. Existing water wash factors and the Sr solubility model will be applied to estimate the overall wash effectiveness.

Enough 0.01 M NaOH will be added to deliver an approximately 10 wt% solids slurry for packaging.

***Basis:*** The RH-TRU treatment is based on the RPP System Plan Rev. 3 assumptions (B2.4.6) and RPP-21970.

### 12.3.4 Sludge Packaging Process Assumptions

#### 12.3.4.1 Dryer Operation

- The product from the dryer is 10 wt% water and 80 wt% waste loading (both relative to waste, water and carrier).
- The slurry is fed to the dryer at the maximum rate of 5.6 gpm. or the capacity of the retrieval technology being used to retrieve the TRU waste, whichever is most constraining.
- Dryer and condenser split factors (i.e., the fraction of a species that is retained in the dryer during processing) are the same as for the 242-A Evaporator and Primary Condenser Units. For those species that are not addressed in the 242-A Evaporator data, a partitioning factor of 8.0E+06 is applied to the feed for that constituent.

#### 12.3.4.2 Sludge Packaging

- The total vermiculite and sand added during the packaging process will be modeled as the addition of $SiO_2$ to the dryer at a ratio of one mass of $SiO_2$ per eight masses of slurry feed on a dry basis.
- The dried CH-TRU waste product is packaged in 55-gallon drums containing 620 $lb_m$ of product per drum.
- The dried RH-TRU waste product is packaged in an RH-TRU Waste Canister containing 2,825 $lb_m$ of product per canister.

***Basis:*** The process assumptions for the CH-TRU sludge treatment were taken from RPP-21970, Rev. 0. For planning purposes, the same flowsheet is used for processing the water-washed sludge from the RH-TRU. The maximum slurry feed rate in gallons per minute is based on a daily slurry rate of 8,040 gallons (i.e., 8,040 gallons of slurry per day). The 242-A split factors are used as the best approximation of the species retained due to a lack of experimental data.

Silica comprises 97.5 % of the total mass of the additive and the composition of vermiculite can vary widely so ignoring the non-$SiO_2$ constituents in vermiculite does not significantly increase the uncertainty in the packaged waste composition.

Although not explicitly modeled, the CH-TRU drums are loaded up to fourteen drums to into a TRUPACT-II shipping container, three TRUPACT-IIs in a shipment, for a maximum of 42 drums per shipment. This assumes an inner canister volume of 0.89 m3 per DOE/CAO 95-1095, *Remote- Handled Transuranic Waste Study* Appendix I, a 90% fill, and a bulk dried waste product density of 1.60 Kg/L.

The density of the dried RH-TRUM product is assumed to be the same as the dried CH-TRU product as stated in RPP-21970 Rev 0, Assumption 3. Each canister will be shipped to WIPP in a RH-TRU 72-B Shipping Package.

# 13.0 IN-TANK STRONTIUM/TRU PRECIPITATION

## 13.1 IN-TANK STRONTIUM/TRU PRECIPITATION PROCESS DESCRIPTION

The RPP-DOE WTP baseline for pretreating supernatant waste received from tanks AN-102 and AN-107 includes a precipitation step for removing radioactive strontium ($^{90}Sr$) and transuranic (TRU) isotopes before the waste is vitrified. This report summarizes the application of the same precipitation process for removing $^{90}Sr$ and transuranics in the double shell tank system before delivery of the AN-102 and AN-107 supernatants to the Waste Treatment and Immobilization Plant. This evaluation of the in-tank precipitation is a direct alternative to the Waste Treatment and Immobilization Plant process.

The Sr /TRU removal process basis is the addition of strontium nitrate (3 molar (M) $Sr(NO_3)_2$) and sodium permanganate (3.83 M $NaMnO_4$) to diluted Envelope C (i.e. AN-102 and AN-107 supernatants) to produce 0.02 M Sr and 0.02 M $MnO_4$ in solution. Addition of $Sr(NO3)_2$ results in isotopic dilution of $^{90}Sr$ and precipitation of $SrCO_3$. Addition of sodium permanganate results in manganese reduction, precipitation of $MnO_2$, and concomitant TRU precipitation. The precipitation process is performed at a 5.5 M sodium concentration.

Based on the Sr/TRU precipitation process criteria, the Sr/TRU precipitation process cannot be conducted in tanks AN-102 or AN-107 due to the volume of dilution water required to achieve a 5.5 M sodium concentration in the supernatant and added reagent volumes. Adequate tank space is not available to perform these addition operations in tanks AN-102 or AN-107. However, tank AP-102 is suitable to receive and process batch transfers of AN-102 and AN-107 supernatants. Based on the total supernatant volumes for treatment and required chemical addition, a batch volume equal to approximately ½ of the existing tank(s) supernatant volume was considered suitable to accommodate the required process volume.

The Sr/TRU precipitation process can be conducted in tank AP-102 by transferring separate batches of tanks AN-102 and AN-107 supernatants into tank AP-102 for treatment. Tank AP-102 supernatant is assumed to be removed, except for a residual supernatant heel of 10 inches. Prior to treatment of AN-102/107 supernatants, these batches are modeled as separate material balances (Appendix A, Attachments 4, 5, 6 and 7). Treated supernatants are transferred into an available LAW tank for storage and/or delivery to the WTP. Strontium and TRU precipitates are accumulated on top of the existing AP-102 sludge layer. The accumulated solids/sludge is diluted to 10 wt% solids and transferred into an available HLW staging tank.

The waste in tanks AN-102 and AN-107 will be pretreated within the DST system and will not need to be segregated when delivered to the WTP. A demonstration of the in-tank Sr/TRU precipitation process using chemical reagents ($NaMnO_4$ and $Sr(NO3)_2$) introduced into a mixture of AN-107 supernate and liquid heel in AP-102. Subsequent to a successful prototype demonstration, batch transfers of the supernate from AN-102 and AN-107 will be processed in AP-102 to generate a Sr and TRU precipitate. The Sr/TRU precipitate will be blended with other tank solids for treatment as HLW.

## 13.2 IN-TANK STRONTIUM/TRU PRECIPITATION MODEL DESCRIPTION

The in-tank strontium/TRU precipitation process logic is contained in the WTP Hot Commissioning Logic workspace. The delivery of feed for precipitation follows the schedule listed in the assumptions section 13.3. After each batch of AN-102 or AN-107 waste has been transferred to AP-102 the Sr/TRU in-tank precipitation is simulated by completing the following steps (in AP-102):

1. First add enough water to dilute the waste to 5.5 M Na,
2. Apply the splits listed in Table 13-1,
3. Add the chemical reagents by adding 5.308 gallons of 3.83 M $NaMnO_4$ and 6.723 gallons of 3 M $Sr(NO3)_2$ each per 1000 gallons of diluted waste.
4. Apply the reactions listed below:

$$Sr(NO_3)_2 + {}^{90}Sr{\cdot}Chelant + Na_2CO_3 \leftrightarrow Sr{\cdot}Chelant + {}^{90}SrCO_3 + 2NaNO_3$$

$$Sr(NO_3)_2 + Na_2CO_3 \leftrightarrow SrCO_3 + 2NaNO_3$$

5. Waits for 30 days before decanting and transferring the waste to another DST.

**Table 13-1 Strontium and Transuranic Precipitation Removal Factors**

| Radionuclide or Chemical Species | Percent Removal | Radionuclide or Chemical Species | Percent Removal | Radionuclide or Chemical Species | Percent Removal |
|---|---|---|---|---|---|
| $^{152}Eu$ | 85 | $^{242}Pu$ | 85 | Fe | 97 |
| $^{154}Eu$ | 85 | $^{243}Am$ | 85 | La | 85 |
| $^{155}Eu$ | 85 | $^{243}Cm$ | 85 | Mn (AN-102) | 30 |
| $^{237}Np$ | 85 | $^{244}Cm$ | 85 | Mn (AN-107) | 96 |
| $^{238}Pu$ | 85 | $^{90}Sr$ | 94 | Nd | 85 |
| $^{239}Pu$ | 85 | Sr total | 94 | Pb | 30 |
| $^{240}Pu$ | 85 | Ba | 19 | Total Inorganic Carbon as $CO_3$ | 3.9 |
| $^{241}Am$ | 85 | Ca | 19 | Total Organic Carbon | 0.0 |
| $^{241}Pu$ | 85 | Ce | 85 | Zr | 82 |
| $^{242}Cm$ | 85 | Cr | 21 | - | - |

The values in Table 13-1, reactions, and chemical additions abased on values in RPP-24809, *Strontium and TRU Separation Process in the DST System*. The solid settling times may be considered conservatively long as the reaction requires a minimum of 4 hours (per RPP-24809) and the settling of C-Farm solids is assumed to occur within 3 to 5 days. Also, some time may be needed for sampling and analysis of the pretreated waste and evaluation of the results before declaring the demonstration was successful.

The pretreated supernate will be delivered to WTP as Envelope A feed. The Sr/TRU precipitate will be blended with other tank solids and delivered to WTP as HLW Envelope D feed.

## 13.3 IN-TANK SR/TRU PRECIPITATION MODEL ASSUMPTIONS AND ISSUES

### 13.3.1 In-Tank Sr/TRU Precipitation Demonstration Schedule

The in-tank Sr/TRU precipitation demonstration will follow the following schedule. The Sr/TRU precipitation steps in the model (as discussed in section 13.2) are completed after each batch.

1. After 3/1/2020, if necessary, clean out AP-102 by decanting supernate down to 10 inches above any existing solids layer.
2. Sometime in April 2020, transfer 50 Kgal of supernate from AN-107 into AP-102, mixing it with the 10 inch liquid heel.

***Basis:*** The demonstration of the in-tank Sr/TRU precipitation process is intended to prove the technology. The ability to clean out AP-102 depends on the availability of DST space. The AP-102 cleanout may be achieved by delivering waste from AP-102 to the WTP before 3/1/2020. If AP-102 has not been delivered to the WTP and the DST system is full, the AP-102 cleanout may be delayed until space becomes available by delivering AP-102, or other LAW feed, to the WTP.

### 13.3.2 In Tank Sr/TRU Precipitation Schedule

After successful completion of the demonstration, the wastes in AN-102 and AN-107 will be transferred to AP-102 in four batches to precipitate Sr and TRU as outlined below. The Sr/TRU precipitation steps in the model (as discussed in section 13.2) are completed after each batch.

**For pretreatment of the AN-107 waste:**

- Add 372 Kgal of waste from AN-107 to AP-102, mixing with the waste from the demonstration.
- Add 422 Kgal of waste from AN-107 to AP-102, mixing with the 10-inch liquid heel. Add about 100 Kgal of flush water to tank AN-107 to dilute remaining supernate heel and transfer to AP-102 for treatment with the second AN-107 Batch. (Note that none of the solids in AN-107 is removed by the flush water.)

**For pretreatment of the AN-102 waste:**

- Add 456 Kgal of waste from AN-102 to AP-102, mixing with the 10-inch liquid heel.
- Add 428 Kgal of waste from AN-102 to AP-102, mixing with the 10-inch liquid heel. Add about 100 Kgal of flush water to tank AN-102 to dilute remaining supernate heel and

transfer to AP-102 for treatment with the second AN-102 Batch. (Note that none of the solids in AN-102 is removed by the flush water.)

***Basis:*** The batches are based on analysis and recommendations from RPP-24809.

***Issue:*** Gravity settling may not achieve the desired solid/liquid separation and additional equipment may be needed to separate the solids from the liquids.

# 14.0 SUPPLEMENTAL BULK VITRIFICATION AND PRETREATMENT SYSTEMS

The WTP, as currently scoped, was not intended to process all of the tank waste. The DOE has pursued a variety of strategies to obtain the needed treatment capacity. These strategies have been included in the HTWOS model to assist in mission planning and scoping studies. The following supplemental vitrification treatment systems are included in HTWOS and are discussed in this section.

- Demonstration Bulk Vitrification System (DBVS)
- Bulk Vitrification System (BV)
- East and West Supplemental LAW Treatment Plant
- Interim Pretreatment System

Fractional Crystallization has been modeled in HTWOS, however is not a currently planned technology and the details and discussion of this modeled system are not included in this revision of the MDD.

## 14.1 PROCESS DESCRIPTION

### 14.1.1 Demonstration Bulk Vitrification System (DBVS)

The DBVS, is to be located in 200 West Area west of S-Farm, and is a single-line, full-scale test facility that will treat LAW from Tank S-109 in order to support a decision as to how to provide supplemental LAW pretreatment capacity.

A portion of the waste from S-109 is selectively dissolved and the low-curie fraction is used as feed for DBVS after separation of entrained solids. The retrieved LAW is mixed with glass-forming minerals (GFM) in a rotary mixer-dryer and heated to about 140 $^{o}$F. under a vacuum of about 26 in. mercury to remove most of the water. The resulting mixture of dried waste and GFM with 1-3 wt% moisture is fed in several batches to a large, refractory-lined, steel box, and melted using the in-container vitrification™ (ICV) technology. The maximum melt temperatures will range from 1300 to 1500$^{o}$C. When the ICV container is nearly full, it is topped with clean GFMs or gypsum from the off-gas treatment system, allowed to cool, and interim stored until it can be transferred to the IDF for disposal on-site.

The off-gas treatment system consists of multiple stages of particulate filtration, NOx removal, scrubbing, and HEPA filtration. Liquid secondary wastes are sent to the LERF for treatment at ETF.

The DBVS will be constructed in process modules that are mounted on mobile skids. The process systems include:

- Clean Soil System which supplies the GFM
- Waste Receipt System
- Waste Mixer-Dryer and Condensate Recovery Systems
- Dried Waste Handling System

- In-Container Vitrification System
- Secondary Waste Storage System.

### 14.1.2 Bulk Vitrification System

After successfully demonstrating the feasibility of bulk vitrification, the DBVS will be shut down, refurbished, re-permitted, and then will be operated as a production-scale Bulk Vitrification System (BVS). The feed will comprise the portion of low-curie waste from tank S-109 and from tank S-105. The refurbished facility will operate as long as low-curie feed is available from tanks S-109 and S-105.

### 14.1.3 East and West Area Supplemental LAW Treatment Process

The East supplemental treatment process (STP) is designed and sized to process the "excess" pretreated LAW feed beyond that which the LAW Vitrification Facility can process. The East STP is a production scale supplemental LAW treatment facility, located in 200 East, northeast of the WTP PT Facility. The East STP is assumed to be a four-line bulk vitrification facility using the same technology and process flowsheet as the DBVS and BVS.

The West STP is to be located near SY-Farm and the Interim Pretreatment System (IPS) and is assumed to be functionally identical to the EAST STP. However, the West STP will treat pretreated supernate from the IPS rather than from the WTP PT Facility.

### 14.1.4 West Area Interim Pretreatment System

The Interim Pretreatment System (IPS) will be used to remove entrained solids, and to remove cesium using an ion exchange from the supernate. Pretreated supernate will be temporarily stored in two double-contained receiver tanks (DCRT) and transferred to the West STP for vitrification (discussed above). The west area interim pretreatment system will be installed in two new vaults located near SY-Farm. Solid/liquid separation will be performed in tank SY-101 by the installation of two rotary micro filtration units, which will remove all entrained solids.

Waste pretreatment will be performed using a regenerable Cs ion exchange (IX) resin contained in one of two new vaults. In one vault, two IX resin columns will be used to remove Cs; one as a lead column and as a one polishing column. Cs removal will proceed until breakthrough of Cs is observed, at which time the system will be shut down and the resin regenerated using an acid eluent. The acid eluent is collected in an eluate tank within the Cs IX vault, sampled and analyzed, neutralized with caustic, and transferred to tank SY-102 for subsequent transfer to an East Area DST.

Pretreated waste is sent to one of two new double-contained receiver tanks (DCRTs) located in the second of the two new vaults. Each new DCRT has a working volume of 41,400 gallons. Pretreated waste from the Cs IX system will be sent to one DCRT while the pretreated waste in the other DCRT is sampled and analyzed before being sent to the West Area Supplemental Treatment Plant.

## 14.2 SUPPLEMENTAL VITRIFICATION/PRETREATMENT MODEL DESCRIPTION

### 14.2.1 Supplemental Vitrification

The bulk vitrification processes is modeled using a simplified continuous flowsheet that implements the overall mass balances for the primary and secondary waste streams as shown in Figures 2-2 and 8-4 of RPP-20528, Rev 1, *Demonstration Bulk Vitrification System Flowsheet*. The mass balance spreadsheet developed for the flowsheet and documented in SVF-1102, Rev 0, consolidates and elaborates on many of the underlying technical assumptions, most notably, the basis for many of the process splits. Any parameters not specifically addressed by those two documents were obtained from the process design criteria provided in 145579-A-DC-002, Rev 0F, *Bulk Vitrification Process Improvement Design Criteria – Full DBVS.*

Each of the supplemental vitrification system is modeled similarly, but each has its own object driven workspace. Figures D-14, D-15, and D-16 show the workspaces for West Area Demo Supplemental Treatment, West Area Supplemental Treatment, and East Area Supplemental Treatment respectively. The modeled equipment for each of these systems is given in Table 14-1.

**Table 14-1 Supplemental Vitrification HTWOS Equipment**

| Tanks/Unit Operation Description | HTWOS Objects | | |
|---|---|---|---|
| | **WEST AREA DEMO SUPPLEMENTAL TREATMENT** | **WESTAREA SUPPLEMENTAL TREATMENT (BV)** | **EASTAREA SUPPLEMENTAL TREATMENT (BV)** |
| BV Feed Tank | WD-BV-FEED-TANK | WEST-BV-FEED-TANK | EAST-BV-FEED-TANK |
| Virtual vessel to predict glass product from feed | WD-BV-NEURAL-NET-DESTINATION | WEST-BV-NEURAL-NET-DESTINATION | EAST-BV-NEURAL-NET-DESTINATION |
| BV dryer | WD-BV-DRYER | WEST-BV-DRYER | EAST-BV-DRYER |
| BV Condenser | WD-BV-DRYER-CONDENSER | WEST-BV-DRYER-CONDENSER | EAST-BV-DRYER-CONDENSER |
| BV air to condenser | WD-BV-DRYER-AIR | WEST-BV-DRYER-AIR | EAST-BV-DRYER-AIR |
| 99-Tc, Cr(OH)4-, Cr(total) split representing lid accumulation | WD-BV-LID-SPLITTER | WEST-BV-LID-SPLITTER | EAST-BV-LID-SPLITTER |
| Accumulation of dust on melter lid | WD-BV-LID-ACCUMULATION | WEST-BV-LID-ACCUMULATION | EAST-BV-LID-ACCUMULATION |
| Split fraction of dust for recycle | WD-BV-MELTER-DUST | WEST-BV-MELTER-DUST | EAST-BV-MELTER-DUST |
| Filter Dust to recycle | WD-SINTERED-METAL-FILTER | WEST-SINTERED-METAL-FILTER | EAST-SINTERED-METAL-FILTER |
| Changes phase of 3-H, H2O, NH3, and NH4 to gas | WD-BV-MELTER-DUST-SHIFT | WEST-BV-MELTER-DUST-SHIFT | EAST-BV-MELTER-DUST-SHIFT |

**Table 14-1 Supplemental Vitrification HTWOS Equipment**

| Tanks/Unit Operation Description | HTWOS Objects | | |
|---|---|---|---|
| | **WEST AREA DEMO SUPPLEMENTAL TREATMENT** | **WESTAREA SUPPLEMENTAL TREATMENT (BV)** | **EASTAREA SUPPLEMENTAL TREATMENT (BV)** |
| Changes phases of 129-I, 14-C, 3-H, Hg-2+ to gas | WD-BV-MELTER-PHASE-SHIFT | WEST-BV-MELTER-PHASE-SHIFT | EAST-BV-MELTER-PHASE-SHIFT |
| Melter | WD-BV-MELTER | WEST-BV-MELTER | EAST-BV-MELTER |
| BV Product Accumulation | WD-BV-PRODUCT | WEST-BV-PRODUCT | EAST-BV-PRODUCT |
| Changes phase of Hg2+ from gas to solid | WD-HG-PHASE-SHIFTER | WEST-HG-PHASE-SHIFTER | EAST-HG-PHASE-SHIFTER |
| Condensed water in melter of-gas | WD-BV-HYDROSONIC-SCR | WEST-BV-HYDROSONIC-SCR | EAST-BV-HYDROSONIC-SCR |
| Water to scrubber | WD-BV-SCR-DILUTION-WATER | WEST-BV-SCR-DILUTION-WATER | EAST-BV-SCR-DILUTION-WATER |
| Air to scrubber | WD-BV-SCR-DILUTION-AIR | WEST-BV-SCR-DILUTION-AIR | EAST-BV-SCR-DILUTION-AIR |
| NaOH addition to have 0.1 M excess OH | WD-BV-SCR-CHEM-ADD | WEST-BV-SCR-CHEM-ADD | EAST-BV-SCR-CHEM-ADD |
| HEPA Filter (99.97% removal) | WD-BV-HEPA | WEST-BV-HEPA | EAST-BV-HEPA |
| Carbon Filter (99% of 129-I removed) | WD-BV-CARBON-FILTER | WEST-BV-CARBON-FILTER | EAST-BV-CARBON-FILTER |
| NOX Scrubber | WD-BV-NOX-SCR | WEST-BV-NOX-SCR | EAST-BV-NOX-SCR |
| Air add to SCR | WD-BV-NOX-SCR-DILUTION-AIR | WEST-BV-NOX-SCR-DILUTION-AIR | EAST-BV-NOX-SCR-DILUTION-AIR |
| NH3 addition | WD-BV-NH3-GAS-CHEM-ADD | WEST-BV-NH3-GAS-CHEM-ADD | EAST-BV-NH3-GAS-CHEM-ADD |
| BV Stack | WD-BV-STACK | WEST-BV-STACK | EAST-BV-STACK |
| Virtual tank to set feed priorities | NA | NA | TF-EAST-BV-FEED |
| Virtual tank to set feed priorities | NA | NA | WTP-EAST-BV-FEED |
| Virtual tank to set feed priorities | NA | NA | EAST-CS-IX-BV-FEED |

One difference between the supplemental BV workspace is the size of the feed receipt tanks. The three DBVS feed receipt tanks are modeled as one tank with a 45,000-gallon working capacity and the twelve 15,000 gallon East and West STP feed receipt tanks are each modeled as one tank with an 180,000-gallon working capacity. The feed is sent into a feed receipt tank and than fed forward in batches to a dryer. Before entering the dryer soil and glass formers ($B_2O_3$ and $ZrO_2$) are added. The mixture of glass forming minerals specified in Table 1 of ST07.004, *RE: Bulk Vitrification Baseline Glass Formulation for FY07 System Plan* is used instead of Hanford soil. The dryer is modeled as a split-evaporator and the splits listed in Table A-9 are applied to fraction off components between the bottoms and the off-gas. The combination of waste and

glass formers is dried to a target moisture content of 1%. The splits and final moisture contents are derived from RPP-25462, Rev. 0, *Bulk Vitrification Process Improvement Design Criteria – Full DBVS*. The off-gas from the evaporator is discharged to the condenser, where the splits in Table A-9 are applied, and 57.999 $ft^3$/min of air is added. The condensate is routed to LERF via the HTWOS WTP Condensate/Stack Emissions system. The non-condensable are routed to the BV off-gas system upstream of the HEPAs.

The dried waste from the dryer is fed to the ICV box, which is modeled as a melter. Prior to entering the melter, a fraction of the 99-Tc, and Chromium in the waste stream is split off to simulate the accumulation of waste on the ICV lid, these splits are discussed in 14.3.6. In addition 0.684% of the ICV feed is sent to the sintered metal filter in the off-gas stream to simulate venting of the dry waste receiver tanks (tanks are not modeled). At the melter, a "starter path" containing soda-lime frit and graphite is added to aid in initiating the melt. Air is added to the melter at a rate of 375 $ft^3$/min. When feed enters the melter, splits in Table A-10 are applied to the non-gas components. After the material is routed to the off-gas, the solid and liquid portion undergo the reactions listed in the table below which are adapted from RPP-25462.

**Table 14-2 Bulk Vitrification Reactions**

| Reactions | Conversion |
|---|---|
| CN-DECOMPOSITION : 2.0 CN-(l) + 2.0 O2(g) --> 2.0 CO2(g) + 1.0 N2(g) | 1 |
| NEUT-REACTION : 1.0 H+(l) + 1.0 OH-(l) --> 1.0 H2O(l) | 1 |
| BV-NO3-DECOMP1 : 2.0 NO3-(l) --> 1.0 N2(g) + 3.0 O2(g) | 0.2 |
| BV-NO3-DECOMP2 : 2.0 NO3-(l) --> 2.0 NO(g) + 2.0 O2(g) | 0.91 |
| BV-NO3-DECOMP3 : 2.0 NO3-(l) --> 2.0 NO2(g) + 1.0 O2(g) | 1 |
| BV-NO2-DECOMP1 : 2.0 NO2-(l) --> 1.0 N2(g) + 2.0 O2(g) | 0.2 |
| BV-NO2-DECOMP2 : 2.0 NO2-(l) --> 2.0 NO(g) + 1.0 O2(g) | 0.91 |
| BV-NO2-DECOMP3 : 2.0 NO2-(l) --> 2.0 NO2(g) | 1 |
| BV-CO3-DECOMPOSITION-1 : 1.0 CO3-2(l) --> 1.0 CO2(g) + 0.5 O2(g) | 0.7 |
| BV-CO3-DECOMPOSITION-2 : 1.0 CO3-2(l) --> 1.0 CO(g) + 1.0 O2(g) | 1 |
| SO4-DECOMPOSITION : 1.0 SO4-2(l) --> 1.0 SO2(g) + 1.0 O2(g) | 0.2 |
| S-OXIDE : 1.0 SO4-2(l) --> 1.0 SO3(o) + 0.5 O2(g) | 1 |
| OH-DECOMPOSITION : 2.0 OH-(l) --> 1.0 H2O(g) + 0.5 O2(g) | 1 |
| AG-OXIDE : 2.0 Ag+(l) + 0.5 O2(g) --> 1.0 Ag2O(o) | 1 |
| AL-OXIDE : 2.0 Al+3(l) + 1.5 O2(g) --> 1.0 Al2O3(o) | 1 |
| AL-OXIDE2 : 2.0 Al(OH)4-(l) --> 0.5 O2(g) + 1.0 Al2O3(o) + 4.0 H2O(g) | 1 |
| AS-OXIDE : 2.0 As+5(l) + 2.5 O2(g) --> 1.0 As2O5(o) | 1 |
| B-OXIDE : 2.0 B+3(l) + 1.5 O2(g) --> 1.0 B2O3(o) | 1 |
| BA-OXIDE : 1.0 Ba+2(l) + 0.5 O2(g) --> 1.0 BaO(o) | 1 |
| BE-OXIDE : 1.0 Be+2(l) + 0.5 O2(g) --> 1.0 BeO(o) | 1 |
| BI-OXIDE : 2.0 Bi+3(l) + 1.5 O2(g) --> 1.0 Bi2O3(o) | 1 |
| CA-OXIDE : 1.0 Ca+2(l) + 0.5 O2(g) --> 1.0 CaO(o) | 1 |

**Table 14-2 Bulk Vitrification Reactions**

| Reactions | Conversion |
|---|---|
| CD-OXIDE : 1.0 Cd+2(l) + 0.5 O2(g) --> 1.0 CdO(o) | 1 |
| CE-OXIDE : 1.0 Ce+3(l) + 1.0 O2(g) --> 1.0 CeO2(o) | 1 |
| CO-OXIDE : 2.0 Co+3(l) + 1.5 O2(g) --> 1.0 Co2O3(o) | 1 |
| CR-OXIDE : 2.0 Cr(TOTAL)(l) + 1.5 O2(g) --> 1.0 Cr2O3(o) | 1 |
| CR-OXIDE2 : 2.0 Cr(OH)4-(l) --> 0.5 O2(g) + 1.0 Cr2O3(o) + 4.0 H2O(g) | 1 |
| CS-OXIDE : 2.0 Cs+(l) + 0.5 O2(g) --> 1.0 Cs2O(o) | 1 |
| CU-OXIDE : 1.0 Cu+2(l) + 0.5 O2(g) --> 1.0 CuO(o) | 1 |
| FE-OXIDE : 2.0 Fe+3(l) + 1.5 O2(g) --> 1.0 Fe2O3(o) | 1 |
| K-OXIDE : 2.0 K+(l) + 0.5 O2(g) --> 1.0 K2O(o) | 1 |
| LA-OXIDE : 2.0 La+3(l) + 1.5 O2(g) --> 1.0 La2O3(o) | 1 |
| LI-OXIDE : 2.0 Li+(l) + 0.5 O2(g) --> 1.0 Li2O(o) | 1 |
| MG-OXIDE : 1.0 Mg+2(l) + 0.5 O2(g) --> 1.0 MgO(o) | 1 |
| MN-OXIDE : 1.0 MnO4-(l) --> 1.0 MnO2(o) + 1.0 O2(g) | 1 |
| MN-OXIDE2 : 1.0 Mn+4(l) + 1.0 O2(g) --> 1.0 MnO2(o) | 1 |
| MN-OXIDE3 : 1.0 MnO2(l) --> 1.0 MnO2(o) | 1 |
| MO-OXIDE : 1.0 Mo+6(l) + 1.5 O2(g) --> 1.0 MoO3(o) | 1 |
| ND-OXIDE : 2.0 Nd+3(l) + 1.5 O2(g) --> 1.0 Nd2O3(o) | 1 |
| NI-OXIDE : 1.0 Ni+2(l) + 0.5 O2(g) --> 1.0 NiO(o) | 1 |
| P-OXIDE : 2.0 PO4-3(l) --> 1.0 P2O5(o) + 1.5 O2(g) | 1 |
| PB-OXIDE : 1.0 Pb+2(l) + 0.5 O2(g) --> 1.0 PbO(o) | 1 |
| PU-OXIDE : 1.0 Pu+4(l) + 1.0 O2(g) --> 1.0 PuO2(o) | 1 |
| RB-OXIDE : 2.0 Rb+(l) + 0.5 O2(g) --> 1.0 Rb2O(o) | 1 |
| RH-OXIDE : 2.0 Rh+3(l) + 1.5 O2(g) --> 1.0 Rh2O3(o) | 1 |
| RU-OXIDE : 2.0 Ru+3(l) + 1.5 O2(g) --> 1.0 Ru2O3(o) | 1 |
| SB-OXIDE : 2.0 Sb+5(l) + 1.5 O2(g) --> 1.0 Sb2O3(o) | 1 |
| SE-OXIDE : 1.0 Se+6(l) + 1.0 O2(g) --> 1.0 SeO2(o) | 1 |
| SI-OXIDE : 1.0 Si+4(l) + 1.0 O2(g) --> 1.0 SiO2(o) | 1 |
| SR-OXIDE : 1.0 Sr+2(l) + 0.5 O2(g) --> 1.0 SrO(o) | 1 |
| TC-OXIDE : 2.0 Tc+7(l) + 3.5 O2(g) --> 1.0 Tc2O7(o) | 1 |
| TE-OXIDE : 1.0 Te+6(l) + 1.0 O2(g) --> 1.0 TeO2(o) | 1 |
| TH-OXIDE : 1.0 Th+4(l) + 1.0 O2(g) --> 1.0 ThO2(o) | 1 |
| TI-OXIDE : 1.0 Ti+4(l) + 1.0 O2(g) --> 1.0 TiO2(o) | 1 |
| TL-OXIDE : 2.0 Tl+3(l) + 1.5 O2(g) --> 1.0 Tl2O3(o) | 1 |
| U-OXIDE : 3.0 U(TOTAL)(l) + 4.0 O2(g) --> 1.0 U3O8(o) | 1 |
| V-OXIDE : 2.0 V+5(l) + 2.5 O2(g) --> 1.0 V2O5(o) | 1 |
| W-OXIDE : 1.0 W+6(l) + 1.5 O2(g) --> 1.0 WO3(o) | 1 |
| ZN-OXIDE : 1.0 Zn+2(l) + 0.5 O2(g) --> 1.0 ZnO(o) | 1 |

**Table 14-2 Bulk Vitrification Reactions**

| Reactions | Conversion |
|---|---|
| ZR-OXIDE : 1.0 Zr+4(l) + 1.0 O2(g) --> 1.0 ZrO2(o) | 1 |
| F-OXIDE2 : 2.0 F-(l) + 2.0 Na+(l) + 1.0 H2O(l) --> 1.0 Na2O(o) + 2.0 HF(g) | 0.1567 |
| F-OXIDE : 1.0 F-(l) --> 1.0 F-(o) | 1 |
| CL-OXIDE2 : 2.0 Cl-(l) + 2.0 Na+(l) + 1.0 H2O(l) --> 1.0 Na2O(o) + 2.0 HCl(g) | 0.3333 |
| CL-OXIDE : 1.0 Cl-(l) --> 1.0 Cl-(o) | 1 |
| NA-OXIDE : 2.0 Na+(l) + 0.5 O2(g) --> 1.0 Na2O(o) | 1 |
| BOIL-WATER-REACTION : 1.0 H2O(l) --> 1.0 H2O(g) | 1 |
| PR-OXIDE : 2.0 Pr+3(l) + 1.5 O2(g) --> 1.0 Pr2O3(o) | 1 |
| Y-OXIDE : 2.0 Y+3(l) + 1.5 O2(g) --> 1.0 Y2O3(o) | 1 |
| PD-OXIDE : 1.0 Pd+2(l) + 0.5 O2(g) --> 1.0 PdO(o) | 1 |
| TA-OXIDE : 2.0 Ta+5(l) + 2.5 O2(g) --> 1.0 Ta2O5(o) | 1 |
| BV-OD1 : 1.0 TOC(l) + 1.0 O2(g) --> 1.0 CO2(g) | 0.7 |
| BV-OD2 : 1.0 TOC(l) + 0.5 O2(g) --> 1.0 CO(g) | 1 |
| OD-1 : 1.0 C2O4-2(l) --> 2.0 CO2(g) | 1 |

The vitrified waste is collected in a product tank which accumulates the BV boxes and totals them. The off-gas from the melter enters the off-gas treatment system at the sintered metal filter, which captures 99.97% of the solid particulate and recycles it back to the dryer feed.

The filtered off-gas next enters the BV-HYDROSONIC-SCR which is simulating the wet scrubber skid, which consists of a series of quenching and scrubbing unit operations. The splits listed in Table A-11 are applied to gas stream, than the reactions in Table 14-3 are applied. Sodium hydroxide is added so that 0.1 Molar excess is present after the reaction completion. Dilution water is also added at a rate of 5 gpm. Condensate leaving the scrubber is sent to LERF via the HTWOS WTP Condensate/Stack Emissions system.

The non-condensable are routed to the HEPA which is modeled as removing 99.97% of the solids. The stream from the HEPA is followed by a carbon filter which eliminates 99 % of the 129-I. The dust free gas is sent to a selective catalytic reduction (SCR) unit modeled as gas scrubber. Dilution air is added at ~ 698 $ft^3$/min to ensure low enough concentrations of the NOx gasses for successful operation of the SCR. Ammonia is added to react with the NOx gas to produce water vapor and nitrogen gas per the reactions in Table 14-4. The final gaseous stream exits at the BV-STACK.

**Table 14-3 BV-HYDROSONIC-SCR-Reactions and Extenets**

| Reaction Stoichiometry | Extent of Reaction |
|---|---|
| 1.0 CO2(g) + 2.0 OH-(l) --> 1.0 CO3-2(l) + 1.0 H2O(l) | 0.7 |
| 1.0 HCl(g) + 1.0 OH-(l) --> 1.0 Cl-(l) + 1.0 H2O(l) | 0.7 |
| 1.0 HF(g) + 1.0 OH-(l) --> 1.0 F-(l) + 1.0 H2O(l) | 0.7 |
| 1.0 NO2(g) + 1.0 OH-(l) --> 0.5 NO3-(l) + 0.5 NO2-(l) + 0.5 H2O(l) | 0.1 |
| 1.0 P2O5(o) + 6.0 OH-(l) --> 2.0 PO4-3(l) + 3.0 H2O(l) | 0.5 |
| 1.0 PO4-3(g) + 3.0 OH-(l) --> 1.0 PO4-3(l) + 1.5 H2O(l) + 0.75 O2(g) | 0.5 |
| 1.0 SO2(g) + 0.5 O2(g) + 2.0 OH-(l) --> 1.0 SO4-2(l) + 1.0 H2O(l) | 0.7 |

**Table 14-4 SCR Reactions**

| Reactions in Order of Completion for BV-NOX-SCR-REACTIONS | Extent of reaction |
|---|---|
| 1.0 CO(g) + 0.5 O2(g) --> 1.0 CO2(g) | 0.9 |
| 24.0 NO(g) + 16.0 NH3(g) --> 24.0 H2O(g) + 20.0 N2(g) | 0.973 |
| 24.0 NO2(g) + 32.0 NH3(g) --> 48.0 H2O(g) + 28.0 N2(g) | 0.973 |

### 14.2.2 Interim Pretreatment Model Description

An interim pretreatment system (IPS) exist in the HTWOS model in both east and west areas; however the east area IPS is not currently used for HTWOS Version 3.0. The east and west area IPS are modeled very closely to the same and are shown in Figure D-17and Figure D-18. The object within the workspaces are listed in Table 14-5.

**Table 14-5 East/West Area IPS Modeled Equipment**

| | **EAST IPS** | **WEST IPS** |
|---|---|---|
| **Tanks/Unit Operation Description** | **HTWOS Objects** | |
| Feed Tank to STP Cs-IX | EAST-TF-IX-FEED-TANK | WEST-TF-IX-FEED-TANK |
| Cs-IX Column | EAST-CS-IX1 | WEST-CS-IX1 |
| Cs-IX Column | EAST-CS-IX2 | WEST-CS-IX2 |
| Cs-IX Effluent Collection | EAST-EFFLUENT-COLLECTION-TANK | WEST-EFFLUENT-COLLECTION-TANK |
| pH adjustment | EFFLUENT-COLLECTION-CAUSTIC | EFFLUENT-COLLECTION-CAUSTIC |
| Feed to East Area BV | FEED1-TO-EAST-BV | FEED1-TO-WEST-BV |
| Feed to East Area BV | FEED2-TO-EAST-BV | FEED2-TO-WEST-BV |
| Spent Resin Collection Tank | EAST-SUPP-TREATMENT-SPENT-RESIN | WEST-SUPP-TREATMENT-SPENT-RESIN |

The removal of entrained solids is modeled using an analyzer which removes the entrained solids. The filtered feed is collected in the ion-exchange feed tank and is than fed to two Cs-IX columns in series. For planning purposes, the regenerable ion exchange system is assumed to perform similarly to the WTP Pretreatment Facility ion exchange system, except that the average 137Cesium concentration in the pretreated waste is assumed to be 1.5 E-5 Ci per mole of sodium.

Each column volume (CV) is 340.7 gallons. Waste is routed to the lead column and than the polishing column. The lead column is loaded with 180 CV of waste at 2 CV/hr. The 137-Cs split is variable and is calculated based on the feed and the endpoint of 1.5 E-5 Ci. Waste is processed through the columns until 50 kg moles of Cs (137-Cs and 134-Cs) is removed or 61,341 gallons of waste has been processed, than the columns are regenerated in a series of five cycles or column modes.

1. Fluid Displacement: 3 CV, 2 CV/hr, 0.20 M NaOH
2. Pre-Elution Rinse: 2 CV, 2 CV/hr, water
3. Elution: 15 CV, 1 CV/hr, 0.5 M $HNO_3$
4. Post-Elution Rinse: 3 CV, 1 CV/hr, water
5. Regeneration, 6 CV, 2 CV/hr, 0.25 M NaOH

The ion exchange product is routed to the appropriate BV system. Waste from the regeneration cycle is routed to a effluent collection vessel and than to AY/AZ Farms (for East STP) or SY-101 (for West STP).

After the column has gone through the regeneration process 10 times, the resin is replaced. No estimate is made of the loading of radionuclides or chemical species on the spent ion exchange resin. The spent resin is collected the spent resin vessel.

## 14.3 SUPPLEMENTAL VITRIFICATION/PRETREATMENT MODEL ASSUMPTIONS

### 14.3.1 Demonstration Bulk Vitrification Model Assumptions

A DBVS will be located in the 200 West Area (west of S-Farm) and be operated at a net rate of 2.745 MTG/d starting on 3/1/2011 to process 260 MT Na from the low-curie waste from tank S-109. The demonstration will be completed by 10/23/2012.

The DBVS will be fed directly from S-109 with no solids entrained out of S-109. The feed will be delivered at 5 M Na. The S-109 waste retrieval will be controlled to limit the total activity in the retrieved waste to 0.0062 Ci per liter (at the 5 M Na feed concentration) for the demonstration.

***Basis:*** The DBVS rate is based on a target design rate of 1.09 gpm of 5 M [Na] nominal feed, a 17.6-wt% waste sodium oxide loading, and a 0.70 TOE (see 145579-A-DC-002, Rev 0F, *Process Design Criteria*). For modeling purposes, the average DBVS glass production rate is set so that the treatment goal is just met by the end date. The average vitrification rate is about 3.31 MTG/d.

### 14.3.2 Supplemental Treatment Demonstration (DBVS) Extension

The refurbished BV facility starts operating on 10/23/2013 (one-year outage) at a net rate of 3.66 MTG/day and operates as long as low-curie feed from tanks S-109 and S-105 is available.

The feed to the BVS process for extended operation includes:

- Low-curie feed from the continued selective dissolution of tank S-109 waste. It is expected that continued selective dissolution of waste in S-109 will continue until the

cumulative removal of waste reaches 90%. Partitioning of the waste components will be approximated using the selective dissolution factors in Table 14-6. About 80% of the Na, and 20% of the Cs currently in the tank will be sent to the DBVS or the BVS. The remaining waste will be retrieved later.

- Low-curie feed from the selective dissolution of tank S-105 waste. It is anticipated that selective dissolution will continue until the cumulative removal of waste reaches 90%. Partitioning of the waste components will be approximated using the selective dissolution factors in Table 14-6. About 80% of the Na, and 20% of the Cs currently in the tank will be sent to the DBVS or the BVS. An additional 9% will be retrieved later to an Interim Pretreatment System, leaving approximately 1% of the waste as a residual.

**Table 14-6 Selective Dissolution Separation Assumptions. (2 Sheets)**

| Specie | Percentage of Tank Waste Low Curie Feed to Bulk Vitrification | Percentage of Waste Feed to Waste Treatment Plant |
|---|---|---|
| **Chemical** | | |
| Aluminum (Al) | 40 | 60 |
| Calcium (Ca) | 100 | 0 |
| Chromate ($CrO_4$) | 45 | 55 |
| Potassium (K) | 80 | 20 |
| Sodium (Na) | 70 | 30 |
| Nitrate ($NO_3$) | 65 | 35 |
| Nitrite ($NO_2$) | 40 | 60 |
| Hydroxide (OH) | 40 | 60 |
| Chloride (Cl) | 40 | 60 |
| Fluoride (F) | 100 | 0 |
| Phosphate ($PO_4$) | 75 | 25 |
| Sulfate ($SO_4$) | 90 | 10 |
| Total Inorganic Carbon (TIC) | 85 | 15 |
| Total Organic Carbon (TOC) | 90 | 10 |
| **Radionuclide** | | |

**Table 14-6 Selective Dissolution Separation Assumptions. (2 Sheets)**

| Specie | Percentage of Tank Waste Low Curie Feed to Bulk Vitrification | Percentage of Waste Feed to Waste Treatment Plant |
|---|---|---|
| $^{90}$Sr (soluble)[2] | 100 | 0 |
| $^{99}$Tc | 40 | 60 |
| $^{129}$I | 40 | 60 |
| $^{137}$Cs [1] | 20 to 40 | 80 to 60 |
| $^{241}$Am (soluble)[2] | 100 | 0 |
| Pu (soluble)[2] | 100 | 0 |

***Basis:*** The DBVS rate, schedule and activity limit are based on programmatic assumptions in the RPP System Plan, Rev. 3 (ORP-11242) and HNF-SD-WM-SP-012, Rev 6, Assumption A2.4.1.

### 14.3.3 East Area Supplemental Treatment Process (Bulk Vitrification)

The production facility starts hot testing on 2/1/2019 and operates at 25% of full capacity (about 3.66 MTG/d) for eight months. Full capacity operation starts on 10/1/2019 at a rate of 14.65 MTG/d. "Excess" pretreated LAW from the WTP will be used to feed the East Area Supplemental Treatment process.

***Basis:*** The rate, schedule and activity limit are based on assumptions in the RPP System Plan, Rev. 3 (ORP-11242).

### 14.3.4 West Area Supplemental Treatment Process

The production facility, consisting of four melter lines, starts hot testing on 7/2/2014 and operates at 25% of full capacity (about 3.66 MTG/d) for eight months.

Full capacity operation starts on 3/2/2015 at a rate of 14.65 MTG/day.

The West Area STP operates to process as much liquid waste from the West Area SSTs as practical.

***Basis:*** The rate, schedule and activity limit are based on assumptions in the RPP System Plan, Rev. 3 (ORP-11242).

### 14.3.5 Bulk Vitrification Product Loading

The $Na_2O$ loading in the product will be a nominal 21.24-wt% based on waste sodium.

***Basis:*** The sodium loading is based on calculations from RPP-25462 and SVF-1102 and past waste acceptance criteria.

### 14.3.6 Bulk Vitrification Lid Retention

Single-use box lids will be used in the DBVS/BVS system and each box with lid will retain 2.70% of the 99Tc fed to the box melter as a non-glass waste form.

Multiple-use box lids will be used in the West STP system. Retention of 99Tc will be modeled as a reduced retention due to the multi-use lids. Each box with lid will retain 0.39% of the 99Tc fed to the box melter as a non-glass waste form.

***Basis:*** The lid retention split is based on values from RPP-25462 and SVF-1102.

### 14.3.7 Bulk Vitrification Product Volume and Packaging

A glass density of 2.65 MT/m3 is used to estimate bulk vitrification product volume. Each BV package (roll-off boxes) is 35 $m^3$ and each is filled with 42.6 MT glass, neglecting the mass of clean glass added to top off the box.

***Basis:*** The glass density and MT of glass where taken from the Design Criteria Work, 145579-A-DC-002, Rev 0F. The volume of the roll-off box is based on the dimensions given in RPP-20528, *Demonstration Bulk Vitrification System Flowsheet*.

### 14.3.8 West Area IPS Feed Delivery

Since the IPS is being started before the West Area STP, pretreatment operations will start on 2/28/2014 and continue until the DCRTs are full. Pretreatment operations will resume when the West Area STP starts up and removes pretreated waste from the DCRTs. Each new DCRT has a working volume of 41,400 gallons.

Waste in tank SY-101 will be used as the first feed to the pretreatment system. Then the supernatant liquid in tank SY-103 will be transferred to SY-101 for solid/liquid separation and delivery to Cs IX. The salt solids in tank SY-103 will be dissolved, sampled and analyzed, and transferred to tank SY-101. After SY-103 has been emptied, it will be used to receive and sample wastes for staging into SY-101 and processing through Cs IX.

### 14.3.9 Second ILAW Facility

No second ILAW facility is modeled.

# 15.0 WASTE DISPOSAL AND MISCELLANOUS INTERFACING FACILITES

The waste disposal sites are not currently included in the model; however they do represent an interface point and therefore the following assumptions are included in the HTWOS version 3.0. There is also one additional assumption associated with cesium and strontium capsules disposal.

## 15.1 WASTE DISPOSAL ASSUMPTIONS

### 15.1.1 Integrated Disposal Facility (IDF)

The IDF will be operational at the beginning of FY 2011 (10/1/2010). The ILAW produced by the Supplemental Treatment demonstration can be safely stored until the IDF is available.

***Basis:*** The IDF is a newly-constructed near-surface disposal facility designed to receive and store the immobilized LAW glass and secondary solid wastes produced by the operation of various Hanford site treatment facilities. The IDF consists of a series of modular trenches that will be constructed as they are needed. The packaged wastes will be disposed of in the IDF as they are produced and can be shipped to the facility.

The Integrated Disposal Facility (IDF) Project will provide permanent disposal for the ILAW, other mixed low-level waste, and LLW. The IDF is a remote-handled trench facility that will consist of a series of near-surface disposal modules constructed on an as-needed basis.

### 15.1.2 Canister Storage Building and Hanford Shipping Facility

The IHLW interim storage facility (the Canister Storage Building), being upgraded by Project W-464, will be operational on 9/29/2015 and provide interim storage for up to 880 IHLW canisters.

The need date for the Canister Storage Building (CSB) will be the date on which the first IHLW is produced (estimated to be 5/17/2018).

For planning purposes, the first 880 IHLW canisters will be stored in the CSB No credit will be taken for the 24 canisters of WTP-provided storage for cooling IHLW canisters, nor for the 24 canisters of WTP-provided buffer capacity.

The Hanford Shipping Facility (HSF) for IHLW will be located in the 200 Area and will be operational on 4/5/2019. If this date is later than the date determined by the model run, it will be accelerated to match that date.

***Basis:*** The dates are based on RPP-12364, *Project W-464, Immobilized High-Level Waste Interim Storage Facility, Preliminary Design Report*, and HNF-SD-WM-SP-012, Rev 6, Assumption A2.6. The cooling and buffer capacity was obtained from 24940-HLW-3YD-HPH-00001, Rev 1.

The immobilized high-level waste (IHLW) canisters will be stored in existing vaults at the existing Canister Storage Building (CSB) until they can be shipped to an approved national repository. Before the CSB is completely filled, the IHLW canisters are assumed to be shipped to the national repository at the rate that they are produced, which eliminates the need for additional HLW storage.

Vaults 2 and 3 of the CSB will provide space for 440 tubes that will hold 880 of the 4.5-m (15-ft) canisters. These canisters can contain IHLW, cesium, or non-routine HLW. The maximum canister-handling capacity of the CSB was estimated at 2 canisters per day. The canister-handling rate was determined by considering the timing of the package transporter from the WTP facilities to the IHLW storage facility, as well as the operation of the unloading system and facility cranes and control systems installed in the CSB.

### 15.1.3 Waste Encapsulation and Storage Facility

Cesium and strontium capsules are disposed separately by U.S. Department of Energy, Richland Operations Office (RL) and not incorporated into HLW glass in the WTP. The HTWOS model does not simulate the disposition of the capsules.

***Basis:*** Hanford Site's 1,936 cesium and strontium capsules, containing about 48 million curies of radioactivity, are stored in water cooled pool cells at WESF. These capsules contain about 33% of the site's total radioactivity and have been classified as high-level mixed waste subject to regulation under the Resource Conservation and Recovery Act of 1976 (RCRA). Cesium and strontium capsules will not be incorporated into HLW glass but will be over packed and sent offsite to the Yucca Mountain Project by 2020.

Pretreatment can connect to a potential new facility designed to receive and treat the Hanford Cs and Sr capsules prior to incorporation into the HLW feed for immobilization in the HLW Vitrification Facility (Section C.7(c)(2) of DE-AC27-01RV14136).

### 15.1.4 Central Waste Complex

The Central Waste Complex (CWC) is assumed to support the needs of the waste treatment mission and is assumed to be available when needed; the demand on the CWC will not be modeled.

***Basis:*** The model is not constrained by the CWC capacity, instead it is used to predict future needs of the CWC.

### 15.1.5 Yucca Mountain (Off-site Repository)

Yucca will be ready to accept IHLW from Hanford on 4/8/2019. IHLW canisters will be shipped to Yucca starting when the Canister Storage Building is full (880 canisters). It is assumed that the WTP-prepared delisting petition for the IHLW is accepted by Ecology prior to shipping the waste to Yucca.

***Basis:*** The assumption is based on Baseline Change Request RPP-06-003, Rev 1, "Alignment of TFC Lifecycle Baseline", November 2006

It is assumed that the laboratory services required to support waste characterization for TFC projects and operations are available and provided in a timely manner.

### 15.1.6 222-S Laboratory

It is assumed that the laboratory services required to support waste characterization for TFC projects and operations are available and provided in a timely manner.

***Basis:*** This assumption is based on SP-3 assumption B2.5.6.1

### 15.1.7 Waste Isolation Pilot Plant (WIPP)

It is assumed that WIPP will be ready to accept contact-handled TRU waste starting on 10/1/2013. It is assumed that WIPP will be ready to accept remote-handled TRU waste one year prior to the modeled need date, but no earlier than the current baseline date of 6/18/2022.

***Basis:*** Baseline Change Request RPP-06-003, Rev 1, "Alignment of TFC Lifecycle Baseline", November 2006.

# 16.0 REFERENCES


145579-A-DC-002, 2004, *Bulk Vitrification Process Improvement Design Criteria – Full DBVS*, Revision 0F, April 8, 2005, AMEC.

24590-HLW-3PS-AE00-T0001, Rev. 2,, *Engineering Specification for High Level Waste Melter*", 4/28/2003, Bechtel National, Inc., Richland, Washington.

24590-LAW-3PS-AE00-T0001, 2003 *Engineering Specification for Low Activity Waste Melters*, Rev. 2, Bechtel National, Inc., Richland Washington

24590-WTP-MDD-PR-01-002, 2005, *Dynamic (G2) Model Design Document*, Rev 8, Bechtel National Inc., Richland, Washington.

24590-WTP-MRQ-PO-04-0065, Revision 0, *"Model Run Request, Supplemental LAW Data Collection"*, 8/16/2004, DRAFT, Bechtel National, Inc., Richland, Washington.

24590-WTP-RPT-PT-02-005, 2005, *Flowsheet Bases, Assumptions, and Requirements*, Rev. 3, Bechtel National, Inc., Richland Washington

CCN: 132846, "Comprehensive Review of the Hanford Waste Treatment Plant Flowsheet and Throughput, Assessment Conducted by an Independent Team of External Experts", March 2006, transmitted under cover of letter CCN: 132846.

D-03-DESIGN-004, 2003, *An Assessment of the Factors Affecting the Ability to Increase the Na2O Loading in the Waste Treatment and Immobilization Plant (WTP) Low Activity Waste (LAW) Glass*, ORP WTP Engineering Division, U.S. Department of Energy, Office of River Protection, Richland, Washington

D-03-DESIGN-005, 2004, HLW Feed Preparation System: Ultra-Filtration Process System, ORP WTP Engineering Division.

DE-AC27-08RV14800, Section C Table C.5, *Summary of Contract Deliverables* ,R*equirement Sources and Implementing Documents*. U.S. Department of Energy, Washington, D.C.

DOE Order 435.1, Radioactive Waste Management

DOE. 2000. DE-AC27-01RV14136, *WTP Contract*, U.S. Department of Energy, Washington, D.C.

DOE/CAO 95-1095, 1995, *Remote- Handled Transuranic Waste Study*, Rev.0, U.S. Department of Energy, Carlsbad Area Office, Carlsbad New Mexico.

HNF-14755, 2007, *Documented Safety Analysis for the 242-A Evaporator*, Rev. 1G, CH2M HILL Hanford Group, Inc., Richland, Washington.

HNF-3484, 2007, *Double-Shell Tank Emergency Pumping Guide*, Rev. 8, CH2M HILL Hanford Group, Inc., Richland, Washington.

HNF-4573, 1999, "Liquid Effluent "Retention Facility Basin 44 Process Test Post-Report", Waste Management Federal Services of Hanford, Inc., Richland, WA, Revision 0A.

HNF-SD-WM-OCD-015, 2007, *Tank Farms Waste Transfer Compatibility Program*, Rev. 17, CH2M HILL Hanford Group, Inc., Richland, Washington.

HNF-SD-WM-SP-012, 2007, *Tank Farm Contractor Operation and Utilization Plan*, Rev. 6, CH2M HILL Hanford Group, Inc., Richland, Washington.

*Nuclides and Isotopes, Sixteenth Edition of the Chart of the Nuclides*, Lockheed Martin Corporation, 2006.

ORP-22339, *River Protection Project Low-Activity Waste Supplemental Treatment Technologies Report*. Rev. A 90%, Department of Energy, Office of River Protection, Richland, Washington.

OSD-T-151-00007, 2007, *Operating Specifications for the Double-Shell Storage Tanks*, Rev. 1, CH2M HILL Hanford Group, Inc., Richland, Washington.

RPP-12364, 2002 Project W-464, Immobilized High-Level Waste Interim Storage Facility, Preliminary Design Repor, CH2M HILL Hanford Group, Inc., Richland, Washington.

RPP-13019, 2003, *Determination of Hanford Waste Tank Volumes*, CH2M HILL Hanford Group, Inc., Richland, Washington.

RPP-13033, 2009, *Tank Farms Documented Safety Analysis*, Washington River Protection Solutions, Richland, Washington.

RPP-14767, 2003, *Hanford Tank Waste Ops. Specific Gravity Model Derivation of Coefficients and Validation*.Rev. 0, CH2M HILL Hanford Group, Inc., Richland, Washington.

RPP-15552, 2003, *Hanford Waste tank Oxidative Leach Behavior Analysis* Rev. 0, CH2M HILL Hanford Group, Inc., Richland, Washington.

RPP-17152, *2003, Hanford Tank Waste Operations Simulator Version Description Document*, Rev. 0, CH2M HILL Hanford Group, Inc., Richland, Washington.

RPP-17239, 2004, *Control Plan for 242-A Evaporator Campaign 401,*Rev. 0, CH2M HILL Hanford Group, Inc., Richland, Washington.

RPP-18592, 2005 *Hanford Tank Waste Operations Simulator Software Verification and Validation Plan and Results, Rev. 2* CH2M HILL Hanford Group, Inc., Richland, Washington.

RPP-20528, 2006, "*Demonstration Bulk Vitrification System Flowsheet*", CH2M HILL Hanford Group, Inc., Richland, Washington, Revision 1.

RPP-20528, 2006, *Demonstration Bulk Vitrification System Flowsheet*, CH2M HILL Hanford Group, Inc., Richland, Washington, Revision 1. CH2M HILL Hanford Group, Inc., Richland, Washington

RPP-21216, 2008, *Single-Shell Tank Retrieval Selection and Sequence*, Rev. 3A, CH2M HILL Hanford Group, Inc., Richland, Washington.

RPP-21970, 2005, "*CH-TRUM WPU&SE 11-Tank Material Balance*", CH2M HILL Hanford Group, Inc., Richland, Washington, Revision 0.

RPP-22105, *Hanford Tank Waste Operations Simulator Integrated Database System Systems Requirements Specification*, CH2M HILL Hanford Group, Inc., Richland, Washington.

RPP-22106, *Hanford Tank Waste Operations Simulator Integrated Database System Design Description*, CH2M HILL Hanford Group, Inc., Richland, Washington.

RPP-24809, 2005, *Strontium and TRU Separation Process in the DST System*, Rev. 0, CH2M HILL Hanford Group, Inc., Richland, Washington.

RPP-25462, Rev. 0, *Bulk Vitrification Process Improvement Design Criteria – Full DBVS*, amec, April 2005

RPP-33715, 2008, *Double-and-Single-Shell Tank Inventory Input to HTWOS Model 2009*, Rev. 1, CH2M HILL Hanford Group, Inc., Richland, Washington.

RPP-35320, 2007, *WTP Ultra-Filter Permeate Assumption for System Modeling, Rev. 0,* CH2M HILL Hanford Group, Inc., Richland, Washington.

RPP-8218, 2001, *Generalized Feed Delivery Descriptions and Tank Specific Flowsheets*

RPP-8554, 2003, *Single-Shell Tank Retrieval Sequence and Double-Shell Tank Space Evaluation*, Rev. 2A, CH2M HILL Hanford Group, Inc., Richland, Washington.

RPP-RPT-39908, 2008, *Hanford Tank Waste Operations Simulator Model (HTWOS) Version 3.0 Verification and Validation Report.,* CH2M HILL Hanford Group, Inc., Richland, Washington.

ST07.004, 2007, "RE: Bulk Vitrification Baseline Glass Formulation for FY07 System Plan", (Letter to J. E. Van Beek, March 19, 2007, from L. M. Bagaasen), Pacific Northwest National Laboratory, Richland, Washington.SVF-1102, Rev 0

SVF-1102, 2006, *145579-A-CA-008,Rev 0 05-10-06.xls*, Rev. 0, CH2M HILL Hanford Group, Inc., Richland, Washington.

SVF-1259, 2007, *EZDK_generic_FY 2007.xls*.Rev. 0, CH2M HILL Hanford Group, Inc., Richland, Washington.

SVF-1283, 2007, *Single-Shell_Tank_Retrieval_Assumptions_for_Mission_Modeling_SVF-1283_Rev_2.xls*, Rev. 2, CH2M HILL Hanford Group, Inc., Richland, Washington.

SVF-1397, 2008, *SP3_Total-Blend_No-Blend_v_2.xls*, Rev. 0, CH2M HILL Hanford Group, Inc., Richland, Washington.

TFC-ENG-CHEM-D-38, *HTWOS Model Inventory Input Preparation*.

# Appendix A. HTWOS Split Factors

# Appendix B. HTWOS Modeled Vessel Identification and Parameters

# Appendix C. Assumption Matrix and Crosswalk

# Appendix D. HTWOS Workspace Graphics

# APPENDIX A. HTWOS SPLIT FACTORS

**Table A-0-1 Partition Coefficients for the 242-A Evaporator. (3 Sheets)**

| Component Name | Partition Coefficient[1] | Reference |
|---|---|---|
| $^{106}Ru$ | 6.70E+07 | HNF-14755, Rev. 0 |
| $^{113m}Cd$ | 1.00E+07 | RPP-17239, Rev. 0 |
| $^{125}Sb$ | 1.00E+07 | HNF-14755, Rev. 0 |
| $^{126}Sn$ | 1.00E+07 | HNF-14755, Rev. 0 |
| $^{129}I$ | 4.00E+08 | RPP-17239, Rev. 0 |
| $^{134}Cs$ | 1.00E+07 | RPP-17239, Rev. 0 |
| $^{137}Cs$ | 9.30E+11 | RPP-17239, Rev. 0 |
| $^{137m}Ba$ | 1.00E+07 | RPP-17239, Rev. 0 |
| $^{14}C$ | 1.00E+07 | HNF-14755, Rev. 0 |
| $^{151}Sm$ | 1.00E+07 | HNF-14755, Rev. 0 |
| $^{152}Eu$ | 1.00E+07 | RPP-17239, Rev. 0 |
| $^{154}Eu$ | 1.00E+07 | RPP-17239, Rev. 0 |
| $^{155}Eu$ | 1.00E+07 | HNF-14755, Rev. 0 |
| $^{226}Ra$ | 1.00E+07 | HNF-14755, Rev. 0 |
| $^{227}Ac$ | 1.00E+07 | RPP-17239, Rev. 0 |
| $^{228}Ra$ | 1.00E+07 | RPP-17239, Rev. 0 |
| $^{229}Th$ | 1.00E+07 | RPP-17239, Rev. 0 |
| $^{231}Pa$ | 1.00E+07 | RPP-17239, Rev. 0 |
| $^{232}Th$ | 1.00E+07 | RPP-17239, Rev. 0 |
| $^{232}U$ | 1.00E+07 | RPP-17239, Rev. 0 |
| $^{233}U$ | 1.00E+07 | HNF-14755, Rev. 0 |
| $^{234}U$ | 1.00E+07 | HNF-14755, Rev. 0 |

**Table A-0-1 Partition Coefficients for the 242-A Evaporator. (3 Sheets)**

| Component Name | Partition Coefficient[1] | Reference |
|---|---|---|
| $^{235}U$ | 1.00E+07 | HNF-14755, Rev. 0 |
| $^{236}U$ | 1.00E+07 | RPP-17239, Rev. 0 |
| $^{237}Np$ | 3.70E+10 | RPP-17239, Rev. 0 |
| $^{238}Pu$ | 3.70E+10 | HNF-14755, Rev. 0 |
| $^{238}U$ | 1.00E+07 | HNF-14755, Rev. 0 |
| $^{239}Pu$ | 3.70E+10 | HNF-14755, Rev. 0 |
| $^{240}Pu$ | 1.00E+07 | HNF-14755, Rev. 0 |
| $^{241}Am$ | 1.40E+10 | HNF-14755, Rev. 0 |
| $^{241}Pu$ | 1.00E+07 | HNF-14755, Rev. 0 |
| $^{242}Cm$ | 1.00E+07 | RPP-17239, Rev. 0 |
| $^{242}Pu$ | 1.00E+07 | RPP-17239, Rev. 0 |
| $^{243}Am$ | 1.40E+10 | HNF-14755, Rev. 0 |
| $^{243}Cm$ | 1.00E+07 | RPP-17239, Rev. 0 |
| $^{244}Cm$ | 1.00E+07 | HNF-14755, Rev. 0 |
| $^{3}H$ | =WVR[2] | RPP-17239, Rev. 0 |
| $^{59}Ni$ | 1.00E+07 | RPP-17239, Rev. 0 |
| $^{60}Co$ | 7.00E+10 | RPP-17239, Rev. 0 |
| $^{63}Ni$ | 1.00E+07 | HNF-14755, Rev. 0 |
| $^{79}Se$ | 1.00E+07 | HNF-14755, Rev. 0 |
| $^{90}Sr$ | 2.30E+09 | RPP-17239, Rev. 0 |
| $^{90}Y$ | 1.00E+07 | RPP-17239, Rev. 0 |
| $^{93}Zr$ | 1.00E+07 | HNF-14755, Rev. 0 |
| $^{93m}Nb$ | 1.00E+07 | RPP-17239, Rev. 0 |
| $^{99}Tc$ | 1.10E+11 | RPP-17239, Rev. 0 |

**Table A-0-1 Partition Coefficients for the 242-A Evaporator. (3 Sheets)**

| Component Name | Partition Coefficient[1] | Reference |
|---|---|---|
| $Ag^{+}$ | 1.00E+07 | HNF-14755, Rev. 0 |
| $Al(OH)_4^{-}$ | 1.00E+07 | RPP-17239, Rev. 0 |
| $Al^{+3}$ | 1.50E+07 | HNF-14755, Rev. 0 |
| $As^{+5}$ | 1.00E+07 | HNF-14755, Rev. 0 |
| $B^{+3}$ | 1.00E+07 | HNF-14755, Rev. 0 |
| $Ba^{+2}$ | 1.00E+07 | HNF-14755, Rev. 0 |
| $Be^{+2}$ | 1.00E+07 | HNF-14755, Rev. 0 |
| $Bi^{+3}$ | 1.00E+07 | HNF-14755, Rev. 0 |
| $Ca^{+2}$ | 1.00E+07 | HNF-14755, Rev. 0 |
| $Cd^{+2}$ | 1.00E+07 | HNF-14755, Rev. 0 |
| $Ce^{+3}$ | 1.00E+07 | RPP-17239, Rev. 0 |
| $Cl^{-}$ | 5.20E+06 | HNF-14755, Rev. 0 |
| $CN^{-}$ | 1.00E+07 | HNF-14755, Rev. 0 |
| $Co^{+3}$ | 1.00E+07 | RPP-17239, Rev. 0 |
| $CO_3^{-2}$ | 1.00E+07 | HNF-14755, Rev. 0 |
| $Cr(OH)_4^{-}$ | 1.00E+07 | RPP-17239, Rev. 0 |
| Cr(TOTAL) | 3.50E+08 | HNF-14755, Rev. 0 |
| $Cs^{+}$ | 1.00E+07 | RPP-17239, Rev. 0 |
| $Cu^{+2}$ | 1.00E+07 | RPP-17239, Rev. 0 |
| $F^{-}$ | 2.40E+08 | HNF-14755, Rev. 0 |
| $Fe^{+3}$ | 1.00E+07 | HNF-14755, Rev. 0 |
| $H^{+}$ | =WVR[2] | RPP-17239, Rev. 0 |
| $H_2O$ | =WVR[2] | RPP-17239, Rev. 0 |
| $Hg^{+2}$ | 1.00E+07 | HNF-14755, Rev. 0 |

**Table A-0-1 Partition Coefficients for the 242-A Evaporator. (3 Sheets)**

| Component Name | Partition Coefficient[1] | Reference |
|---|---|---|
| $K^{+}$ | 3.50E+07 | HNF-14755, Rev. 0 |
| $La^{+3}$ | 1.00E+07 | RPP-17239, Rev. 0 |
| $Li^{+}$ | 1.00E+07 | RPP-17239, Rev. 0 |
| $Mg^{+2}$ | 1.00E+07 | HNF-14755, Rev. 0 |
| $Mn^{+4}$ | 1.00E+07 | HNF-14755, Rev. 0 |
| $MnO_2$ | 1.00E+07 | RPP-17239, Rev. 0 |
| $MnO_4^{-}$ | 1.00E+07 | RPP-17239, Rev. 0 |
| $Mo^{+6}$ | 1.00E+07 | HNF-14755, Rev. 0 |
| $Na^{+}$ | 3.00E+08 | HNF-14755, Rev. 0 |
| $Nd^{+3}$ | 1.00E+07 | RPP-17239, Rev. 0 |
| $NH_3$ | 1.10E+03 | HNF-14755, Rev. 0 |
| $Ni^{+2}$ | 1.00E+07 | HNF-14755, Rev. 0 |
| $NO_2^{-}$ | 2.40E+07 | HNF-14755, Rev. 0 |
| $NO_3^{-}$ | 5.70E+06 | HNF-14755, Rev. 0 |
| $OH^{-}$ | 1.00E+07 | HNF-14755, Rev. 0 |
| $Pb^{+2}$ | 3.00E+05 | HNF-14755, Rev. 0 |
| $Pd^{+2}$ | 1.00E+07 | RPP-17239, Rev. 0 |
| $PO_4^{-3}$ | 1.00E+07 | HNF-14755, Rev. 0 |
| $Pr^{+3}$ | 1.00E+07 | RPP-17239, Rev. 0 |
| $Pu^{+4}$ | 1.00E+07 | RPP-17239, Rev. 0 |
| $Rb^{+}$ | 1.00E+07 | RPP-17239, Rev. 0 |
| $Rh^{+3}$ | 1.00E+07 | RPP-17239, Rev. 0 |
| $Ru^{+3}$ | 1.00E+07 | RPP-17239, Rev. 0 |
| $Sb^{+5}$ | 1.00E+07 | HNF-14755, Rev. 0 |

**Table A-0-1 Partition Coefficients for the 242-A Evaporator. (3 Sheets)**

| Component Name | Partition Coefficient[1] | Reference |
|---|---|---|
| $Se^{+6}$ | 1.00E+07 | HNF-14755, Rev. 0 |
| $Si^{+4}$ | 1.00E+07 | HNF-14755, Rev. 0 |
| $SO_4^{-2}$ | 1.40E+07 | HNF-14755, Rev. 0 |
| $Sr^{+2}$ | 1.00E+07 | RPP-17239, Rev. 0 |
| $Ta^{+5}$ | 1.00E+07 | RPP-17239, Rev. 0 |
| $Tc^{+7}$ | 1.00E+07 | RPP-17239, Rev. 0 |
| $Te^{+6}$ | 1.00E+07 | RPP-17239, Rev. 0 |
| $Th^{+4}$ | 1.00E+07 | RPP-17239, Rev. 0 |
| $Ti^{+4}$ | 1.00E+07 | HNF-14755, Rev. 0 |
| $Tl^{+3}$ | 1.00E+07 | RPP-17239, Rev. 0 |
| TOC | 1.00E+07 | RPP-17239, Rev. 0 |
| U(TOTAL) | 1.00E+07 | HNF-14755, Rev. 0 |
| $V^{+5}$ | 1.00E+07 | HNF-14755, Rev. 0 |
| $W^{+6}$ | 1.00E+07 | RPP-17239, Rev. 0 |
| $Y^{+3}$ | 1.00E+07 | RPP-17239, Rev. 0 |
| $Zn^{+2}$ | 1.00E+07 | HNF-14755, Rev. 0 |
| $Zr^{+4}$ | 1.00E+07 | HNF-14755, Rev. 0 |

Notes;

1. The partition coefficient represents the vapor-liquid equilibrium behavior of a component, and is defined as the ratio of the concentration of a component in the concentrated bottoms to the concentration of that same component in the vapor.
2. The entry "=WVR" means "equals the waste volume reduction factor." The use of "=WVR" indicates that the affected component is split in the same proportions as water.

| Table A-0-2 Pretreatment Splits | | | | |
|---|---|---|---|---|
| | Pretreatment Split (Fraction of Feed to Vapor) | | | |
| Unit | HTWOS-V11002 (FEP) | HTWOS-V41001-CONDENSER | HTWOS-V41011 (TLP) | HTWOS-V41011-CONDENSER |
| | Liquid/Vapor Fractions | Liquid/Vapor Fractions | Liquid/Vapor Fractions | Liquid/Vapor Fractions |
| 113m-Cd | 0.0000452 | 0.002 | 0.0000452 | 0.00154 |
| 125-Sb | 0.00025 | 0.0000358 | 0.00025 | 0.0000358 |
| 126-Sn | 0.00025 | 0.0000358 | 0.00025 | 0.0000358 |
| 129-I | 0.00231 | 0.0011 | 0.00231 | 0.0011 |
| 134-Cs | 1.07E-08 | 0.0000427 | 1.07E-08 | 0.0000427 |
| 137-Cs | 1.07E-08 | 0.0000427 | 1.07E-08 | 0.0000427 |
| 137m-Ba | 0.00099 | 0.002 | 0.00099 | 0.002 |
| 14-C | 0.00099 | 0.002 | 0.00099 | 0.00154 |
| 151-Sm | 0.000000267 | 0.00032 | 0.000000267 | 0.00032 |
| 152-Eu | 0.000000709 | 0.00032 | 0.000000709 | 0.00032 |
| 154-Eu | 0.000000709 | 0.00032 | 0.000000709 | 0.00032 |
| 155-Eu | 0.000000709 | 0.00032 | 0.000000709 | 0.00032 |
| 229-Th | 0.00099 | 0.002 | 0.00099 | 0.00154 |
| 232-Th | 0.00099 | 0.002 | 0.00099 | 0.00154 |
| 232-U | 0.00099 | 0.002 | 0.00099 | 0.00154 |
| 233-U | 0.00099 | 0.002 | 0.00099 | 0.00154 |
| 234-U | 0.00099 | 0.002 | 0.00099 | 0.00154 |
| 235-U | 0.00099 | 0.002 | 0.00099 | 0.00154 |
| 236-U | 0.00099 | 0.002 | 0.00099 | 0.00154 |
| 237-Np | 0.00099 | 0.002 | 0.00099 | 0.00154 |
| 238-Pu | 0.000000267 | 0.00032 | 0.000000267 | 0.00032 |
| 238-U | 0.00099 | 0.002 | 0.00099 | 0.00154 |
| 239-Pu | 0.000000267 | 0.00032 | 0.000000267 | 0.00032 |
| 240-Pu | 0.000000267 | 0.00032 | 0.000000267 | 0.00032 |
| 241-Am | 0.000000709 | 0.00032 | 0.000000709 | 0.00032 |
| 241-Pu | 0.000000267 | 0.00032 | 0.000000267 | 0.00032 |
| 242-Cm | 0.00099 | 0.002 | 0.00099 | 0.00154 |
| 242-Pu | 0.000000267 | 0.00032 | 0.000000267 | 0.00032 |
| 243-Am | 0.000000709 | 0.00032 | 0.000000709 | 0.00032 |
| 243-Cm | 0.00099 | 0.002 | 0.00099 | 0.00154 |
| 244-Cm | 0.00099 | 0.002 | 0.00099 | 0.00154 |

**Table A-0-2 Pretreatment Splits**

| Pretreatment Split (Fraction of Feed to Vapor) | | | | |
|---|---|---|---|---|
| **Unit** | **HTWOS-V11002 (FEP)** | **HTWOS-V41001-CONDENSER** | **HTWOS-V41011 (TLP)** | **HTWOS-V41011-CONDENSER** |
| **3-H** | 0.599 | 0.014 | 0.5988 | 0.014 |
| **59-Ni** | 0.0000339 | 0.002 | 0.0000339 | 0.00154 |
| **60-Co** | 0.00099 | 0.002 | 0.00099 | 0.00154 |
| **63-Ni** | 0.0000339 | 0.002 | 0.0000339 | 0.00154 |
| **90-Sr** | 0.00000431 | 0.0000855 | 0.00000431 | 0.0000855 |
| **93-Zr** | 0.00099 | 0.002 | 0.00099 | 0.002 |
| **99-Tc** | 0.00099 | 0.00154 | 0.00099 | 0.00154 |
| **Ag+** | 0.00099 | 0.002 | 0.00099 | 0.00188 |
| **Al(OH)4-** | 0.000658 | 0.002 | 0.000658 | 0.00154 |
| **Al+3** | 0.000658 | 0.002 | 0.000658 | 0.00154 |
| **As+5** | 0.00099 | 0.002 | 0.00099 | 0.00154 |
| **B+3** | 0.00099 | 0.002 | 0.00099 | 0.00177 |
| **Ba+2** | 0.00099 | 0.002 | 0.00099 | 0.002016 |
| **Bi+3** | 0.00025 | 0.0000358 | 0.00025 | 0.0000358 |
| **C2O4-2** | 0.067 | 0.00000153 | 0.0667 | 0.00000153 |
| **Ca+2** | 0.001 | 0.058 | 0.001 | 0.05814 |
| **Cd+2** | 0.0000452 | 0.002 | 0.0000452 | 0.00154 |
| **Ce+3** | 0.00099 | 0.002 | 0.00099 | 0.00154 |
| **Cl-** | 0.002 | 0.0001299 | 0.0019 | 0.0001299 |
| **Co+3** | 0.00099 | 0.002 | 0.00099 | 0.00154 |
| **CO3-2** | 0.00099 | 0.002 | 0.00099 | 0.00154 |
| **Cr(OH)4-** | 0.0000282 | 0.000188 | 0.0000282 | 0.000188 |
| **Cr(TOTAL)** | 0.0000282 | 0.000188 | 0.0000282 | 0.000188 |
| **Cs+** | 1.07E-08 | 0.0000427 | 1.07E-08 | 0.0000427 |
| **Cu+2** | 0.00099 | 0.002 | 0.00099 | 0.00188 |
| **F-** | 0.0000411 | 0.00053 | 0.0000411 | 0.00053 |
| **Fe+3** | 0.00099 | 0.002 | 0.00099 | 0.002 |
| **H+** | 0.1 | 0.01 | 0.1 | 0.01 |
| **Hg+2** | 0.00099 | 0.00154 | 0.00099 | 0.00154 |
| **K+** | 0.000282 | 0.002 | 0.000282 | 0.00157 |
| **La+3** | 0.00099 | 0.002 | 0.00099 | 0.00154 |
| **Li+** | 0.000033 | 0.002 | 0.000033 | 0.0016 |
| **Mg+2** | 0.00099 | 0.035 | 0.00099 | 0.035 |
| **Mn+4** | 0.00099 | 0.002 | 0.00099 | 0.001642 |
| **MnO4-** | 0.00099 | 0.002 | 0.00099 | 0.001642 |
| **Na+** | 0.000033 | 0.002 | 0.000033 | 0.002 |

**Table A-0-2 Pretreatment Splits**

| Pretreatment Split (Fraction of Feed to Vapor) | | | | |
|---|---|---|---|---|
| **Unit** | **HTWOS-V11002 (FEP)** | **HTWOS-V41001-CONDENSER** | **HTWOS-V41011 (TLP)** | **HTWOS-V41011-CONDENSER** |
| **NH3** | 0.9 | 0.081 | 0.9 | 0.0806 |
| **Ni+2** | 0.0000339 | 0.002 | 0.0000339 | 0.00154 |
| **NO2-** | 0.000412 | 0.0000962 | 0.000412 | 0.0000962 |
| **NO3-** | 0.002 | 0.0000962 | 0.001733 | 0.0000962 |
| **OH(BOUND)** | 0.00099 | 0.002 | 0.00099 | 0.00154 |
| **OH-** | 0.00099 | 0.002 | 0.00099 | 0.00154 |
| **Pb+2** | 0.00025 | 0.0000358 | 0.00025 | 0.0000358 |
| **Pd+2** | 0.0000339 | 0.002 | 0.0000339 | 0.00154 |
| **PO4-3** | 0.00099 | 0.002 | 0.00099 | 0.00154 |
| **Pu+4** | 0.000000267 | 0.00032 | 0.000000267 | 0.00032 |
| **Sb+5** | 0.00025 | 0.0000358 | 0.00025 | 0.0000358 |
| **Si+4** | 0.00099 | 0.004 | 0.00099 | 0.00435 |
| **SO4-2** | 0.000704 | 0.0002375 | 0.000704 | 0.0002375 |
| **Sr+2** | 0.00000431 | 0.0000855 | 0.00000431 | 0.0000855 |
| **Tc+7** | 0.00099 | 0.002 | 0.00099 | 0.00154 |
| **Th+4** | 0.00099 | 0.002 | 0.00099 | 0.00154 |
| **Ti+4** | 0.00099 | 0.002 | 0.00099 | 0.002 |
| **U(TOTAL)** | 0.00099 | 0.002 | 0.00099 | 0.00154 |
| **Zn+2** | 0.00099 | 0.002 | 0.00099 | 0.001621 |
| **Zr+4** | 0.00099 | 0.002 | 0.00099 | 0.002 |

| Table A-0-3 LAW Melter Splits | |
|---|---|
| HTWOS-LAW-MELTER-1 (Fraction of Feed to Offgas) | |
| **Component** | **Liquid/Solid Fractions** |
| 106-Ru | 2.44E-01 |
| 113m-Cd | 8.70E-03 |
| 125-Sb | 9.10E-04 |
| 126-Sn | 5.20E-04 |
| 129-I | 8.00E-01 |
| 134-Cs | 3.85E-01 |
| 137-Cs | 3.85E-01 |
| 137m-Ba | 3.85E-01 |
| 14-C | 1.00E+00 |
| 151-Sm | 5.20E-04 |
| 152-Eu | 5.20E-04 |
| 154-Eu | 5.20E-04 |
| 155-Eu | 5.20E-04 |
| 226-Ra | 5.20E-04 |
| 227-Ac | 5.20E-04 |
| 228-Ra | 5.20E-04 |
| 229-Th | 5.20E-04 |
| 231-Pa | 5.20E-04 |
| 232-Th | 5.20E-04 |
| 232-U | 5.20E-04 |
| 233-U | 5.20E-04 |
| 234-U | 5.20E-04 |
| 235-U | 5.20E-04 |
| 236-U | 5.20E-04 |
| 237-Np | 5.20E-04 |
| 238-Pu | 5.20E-04 |
| 238-U | 5.20E-04 |
| 239-Pu | 5.20E-04 |
| 240-Pu | 5.20E-04 |
| 241-Am | 5.20E-04 |
| 241-Pu | 5.20E-04 |
| 242-Cm | 5.20E-04 |
| 242-Pu | 5.20E-04 |

| Table A-0-3 LAW Melter Splits | |
|---|---|
| HTWOS-LAW-MELTER-1 (Fraction of Feed to Offgas) | |
| **Component** | **Liquid/Solid Fractions** |
| 243-Am | 5.20E-04 |
| 243-Cm | 5.20E-04 |
| 244-Cm | 5.20E-04 |
| 3-H | 1.00E+00 |
| 59-Ni | 1.20E-04 |
| 60-Co | 5.20E-04 |
| 63-Ni | 1.20E-04 |
| 79-Se | 2.94E-01 |
| 90-Sr | 1.03E-03 |
| 90-Y | 1.03E-03 |
| 93-Zr | 1.30E-04 |
| 93m-Nb | 5.20E-04 |
| 99-Tc | 6.21E-01 |
| Ag+ | 2.70E-02 |
| Al(OH)4- | 6.20E-04 |
| Al+3 | 6.20E-04 |
| As+5 | 3.03E-03 |
| B+3 | 1.29E-03 |
| Ba+2 | 2.17E-03 |
| Be+2 | 5.20E-04 |
| Bi+3 | 9.10E-04 |
| Ca+2 | 5.10E-04 |
| Cd+2 | 8.70E-03 |
| Ce+3 | 5.20E-04 |
| CN- | 4.09E-03 |
| Co+3 | 5.20E-04 |
| Cr(OH)4- | 1.49E-02 |
| Cr(TOTAL) | 1.49E-02 |
| Cs+ | 3.85E-01 |
| Cu+2 | 5.00E-04 |
| Fe+3 | 8.30E-04 |
| Hg+2 | 1.00E+00 |
| K+ | 1.47E-02 |
| La+3 | 2.00E-02 |
| Li+ | 9.70E-04 |

| Table A-0-3 LAW Melter Splits | |
|---|---|
| **HTWOS-LAW-MELTER-1 (Fraction of Feed to Offgas)** | |
| **Component** | **Liquid/Solid Fractions** |
| Mg+2 | 1.30E-04 |
| Mn+4 | 1.33E-02 |
| MnO2 | 1.33E-02 |
| MnO4- | 1.33E-02 |
| Mo+6 | 1.36E-02 |
| Na+ | 3.97E-03 |
| Nd+3 | 2.04E-03 |
| Ni+2 | 1.20E-04 |
| Pb+2 | 6.06E-03 |
| Pd+2 | 5.20E-04 |
| PO4-3 | 4.09E-03 |
| Pr+3 | 5.20E-04 |
| Pu+4 | 5.20E-04 |
| Rb+ | 3.70E-03 |
| Rh+3 | 2.00E-02 |
| Ru+3 | 2.44E-01 |
| Sb+5 | 9.10E-04 |
| Se+6 | 2.94E-01 |
| Si+4 | 3.70E-04 |
| SO4-2 | 3.27E-01 |
| Sr+2 | 1.03E-03 |
| Ta+5 | 5.20E-04 |
| Tc+7 | 3.70E-01 |
| Te+6 | 5.56E-02 |
| Th+4 | 5.20E-04 |
| Ti+4 | 1.09E-03 |
| Tl+3 | 5.00E-04 |
| U(TOTAL) | 5.20E-04 |
| V+5 | 5.20E-04 |
| W+6 | 5.20E-04 |
| Y+3 | 8.30E-04 |
| Zn+2 | 1.23E-03 |
| Zr+4 | 1.30E-04 |

**Table A-0-4 LAW Off-Gas Splits**

| | HTWOS-LAW-SBS | HTWOS-LAW-WESP | HTWOS-LAW-VOC-SCRUB | LAW-NOX-SCRUB | HTWOS-LAW-CAUSTIC-SCRUBBER |
|---|---|---|---|---|---|
| | Liquid/Solid Fractions | Liquid/Solid Fractions | Liquid/Solid Fractions | Liquid/Solid Fractions | Liquid/Solid Fractions |
| **106-Ru** | 0.72222 | 0.00182 | 0.9 | Only split for C2O4-2 = 0.99999 | 1.0000 |
| **113m-Cd** | 0.81132 | 0.00286 | 0.9 | | 1.0000 |
| **125-Sb** | 0.84848 | 0.00164 | 0.9 | | 1.0000 |
| **126-Sn** | 0.98822 | 0.02 | 0.9 | | 1.0000 |
| **129-I** | 0.87654 | 1 | 0.99 | | 0.01 |
| **134-Cs** | 0.79457 | 0.00208 | 0.9 | | 1.0000 |
| **137-Cs** | 0.79457 | 0.00208 | 0.9 | | 1.0000 |
| **137m-Ba** | 0.79457 | 0.00208 | 0.9 | | 1.0000 |
| **14-C** | 1 | 1 | | | 1.0000 |
| **151-Sm** | 0.98822 | 0.02 | 0.9 | | 1.0000 |
| **152-Eu** | 0.98822 | 0.02 | 0.9 | | 1.0000 |
| **154-Eu** | 0.98822 | 0.02 | 0.9 | | 1.0000 |
| **155-Eu** | 0.98822 | 0.02 | 0.9 | | 1.0000 |
| **226-Ra** | 0.98822 | 0.02 | 0.9 | | 1.0000 |
| **227-Ac** | 0.98822 | 0.02 | 0.9 | | 1.0000 |
| **228-Ra** | 0.98822 | 0.02 | 0.9 | | 1.0000 |
| **229-Th** | 0.98822 | 0.02 | 0.9 | | 1.0000 |
| **231-Pa** | 0.98822 | 0.02 | 0.9 | | 1.0000 |
| **232-Th** | 0.98822 | 0.02 | 0.9 | | 1.0000 |
| **232-U** | 0.98822 | 0.02 | 0.9 | | 1.0000 |
| **233-U** | 0.98822 | 0.02 | 0.9 | | 1.0000 |
| **234-U** | 0.98822 | 0.02 | 0.9 | | 1.0000 |
| **235-U** | 0.98822 | 0.02 | 0.9 | | 1.0000 |
| **236-U** | 0.98822 | 0.02 | 0.9 | | 1.0000 |
| **237-Np** | 0.98822 | 0.02 | 0.9 | | 1.0000 |
| **238-Pu** | 0.98822 | 0.02 | 0.9 | | 1.0000 |
| **238-U** | 0.98822 | 0.02 | 0.9 | | 1.0000 |
| **239-Pu** | 0.98822 | 0.02 | 0.9 | | 1.0000 |
| **240-Pu** | 0.98822 | 0.02 | 0.9 | | 1.0000 |
| **241-Am** | 0.98822 | 0.02 | 0.9 | | 1.0000 |
| **241-Pu** | 0.98822 | 0.02 | 0.9 | | 1.0000 |
| **242-Cm** | 0.98822 | 0.02 | 0.9 | | 1.0000 |
| **242-Pu** | 0.98822 | 0.02 | 0.9 | | 1.0000 |
| **243-Am** | 0.98822 | 0.02 | 0.9 | | 1.0000 |
| **243-Cm** | 0.98822 | 0.02 | 0.9 | | 1.0000 |
| **244-Cm** | 0.98822 | 0.02 | 0.9 | | 1.0000 |
| **3-H** | | 1 | | | 1.0000 |
| **59-Ni** | 0.98 | 0.00588 | 0.9 | | 1.0000 |
| **60-Co** | 0.86301 | 0.00182 | 0.9 | | 1.0000 |
| **63-Ni** | 0.98 | 0.00588 | 0.9 | | 1.0000 |
| **79-Se** | 0.88095 | 0.01 | 0.9 | | 1.0000 |

**Table A-0-4 LAW Off-Gas Splits**

| | HTWOS-LAW-SBS | HTWOS-LAW-WESP | HTWOS-LAW-VOC-SCRUB | LAW-NOX-SCRUB | HTWOS-LAW-CAUSTIC-SCRUBBER |
|---|---|---|---|---|---|
| | Liquid/Solid Fractions | Liquid/Solid Fractions | Liquid/Solid Fractions | Liquid/Solid Fractions | Liquid/Solid Fractions |
| **90-Sr** | 0.99643 | 0.01667 | 0.9 | | 1.0000 |
| **90-Y** | 0.99643 | 0.01667 | 0.9 | | 1.0000 |
| **93-Zr** | 0.98308 | 0.05 | 0.9 | | 1.0000 |
| **93m-Nb** | 0.98822 | 0.02 | 0.9 | | 1.0000 |
| **99-Tc** | 0.79592 | 0.00208 | 0.9 | | 1.0000 |
| **Ag+** | 0.98 | 0.00588 | 0.9 | | 1.0000 |
| **Al(OH)4-** | 0.99051 | 0.00526 | 0.9 | | 1.0000 |
| **Al+3** | 0.99051 | 0.00526 | 0.9 | | 1.0000 |
| **As+5** | 0.82143 | 0.00345 | 0.9 | | 1.0000 |
| **B+3** | 0.95081 | 0.05 | 0.9 | | 1.0000 |
| **Ba+2** | 0.99231 | 0.025 | 0.9 | | 1.0000 |
| **Be+2** | 0.98822 | 0.02 | 0.9 | | 1.0000 |
| **Bi+3** | 0.84848 | 0.00164 | 0.9 | | 1.0000 |
| **C2O4-2** | 0.87952 | 0.00204 | 0.9 | | 1.0000 |
| **Ca+2** | 0.97768 | 0.00667 | 0.9 | | 1.0000 |
| **Cd+2** | 0.81132 | 0.00286 | 0.9 | | 1.0000 |
| **Ce+3** | 0.99697 | 0.05 | 0.9 | | 1.0000 |
| **Cl-** | 0.87962 | 0.00204 | 0.9 | | 1.0000 |
| **CN-** | 0.87962 | 0.00204 | 0.9 | | 1.0000 |
| **Co+3** | 0.86301 | 0.00182 | 0.9 | | 1.0000 |
| **CO3-2** | 0.87962 | | 0.9 | | 1.0000 |
| **Cr(OH)4-** | 0.82632 | 0.0025 | 0.9 | | 1.0000 |
| **Cr(TOTAL)** | 0.82632 | 0.0025 | 0.9 | | 1.0000 |
| **Cs+** | 0.79457 | 0.00208 | 0.9 | | 1.0000 |
| **Cu+2** | 0.98571 | 0.02 | 0.9 | | 1.0000 |
| **F-** | 0.87962 | 0.00204 | 0.9 | | 1.0000 |
| **Fe+3** | 0.99108 | 0.00833 | 0.9 | | 1.0000 |
| **H+** | 1 | 0.00833 | 0.9 | | 1.0000 |
| **Hg+2** | 0.28571 | 1 | 0.99863 | | 1.0000 |
| **K+** | 0.81003 | 0.00208 | 0.9 | | 1.0000 |
| **La+3** | 0.99857 | 0.025 | 0.9 | | 1.0000 |
| **Li+** | 0.88209 | 0.00238 | 0.9 | | 1.0000 |
| **Mg+2** | 0.94781 | 0.00556 | 0.9 | | 1.0000 |
| **Mn+4** | 0.98571 | 0.00714 | 0.9 | | 1.0000 |
| **MnO2** | 0.98571 | 0.00714 | 0.9 | | 1.0000 |
| **MnO4-** | 0.98571 | 0.00714 | 0.9 | | 1.0000 |
| **Mo+6** | 0.88506 | 0.00208 | 0.9 | | 1.0000 |
| **Na+** | 0.87962 | 0.00204 | 0.9 | | 1.0000 |
| **Nd+3** | 0.99808 | 0.02 | 0.9 | | 1.0000 |
| **NH3** | 0.9 | 0.76923 | 0.9 | | |
| **NH4+** | 0.9 | 0.00204 | 0.9 | | |
| **Ni+2** | 0.98 | 0.00588 | 0.9 | | 1.0000 |
| **NO2-** | 0.87962 | 0.00204 | 0.9 | | 1.0000 |
| **NO3-** | 0.87962 | 0.00204 | 0.9 | | 1.0000 |

**Table A-0-4 LAW Off-Gas Splits**

| | HTWOS-LAW-SBS | HTWOS-LAW-WESP | HTWOS-LAW-VOC-SCRUB | LAW-NOX-SCRUB | HTWOS-LAW-CAUSTIC-SCRUBBER |
|---|---|---|---|---|---|
| | Liquid/Solid Fractions | Liquid/Solid Fractions | Liquid/Solid Fractions | Liquid/Solid Fractions | Liquid/Solid Fractions |
| **OH(BOUND)** | 0.87962 | 0.00204 | 0.9 | | 1.0000 |
| **OH-** | 0.87962 | 0.00204 | 0.9 | | 1.0000 |
| **Pb+2** | 0.86842 | 0.00323 | 0.9 | | 1.0000 |
| **Pd+2** | 0.98822 | 0.02 | 0.9 | | 1.0000 |
| **PO4-3** | 0.59329 | 0.00204 | 0.9 | | 1.0000 |
| **Pr+3** | 0.98822 | 0.02 | 0.9 | | 1.0000 |
| **Pu+4** | 0.98822 | 0.02 | 0.9 | | 1.0000 |
| **Rb+** | 0.79457 | 0.00208 | 0.9 | | 1.0000 |
| **Rh+3** | 0.79457 | 0.00208 | 0.9 | | 1.0000 |
| **Ru+3** | 0.72222 | 0.00182 | 0.9 | | 1.0000 |
| **Sb+5** | 0.84848 | 0.00164 | 0.9 | | 1.0000 |
| **Se+6** | 0.88095 | 0.01 | 0.9 | | 1.0000 |
| **Si+4** | 0.99077 | 0.00455 | 0.9 | | 1.0000 |
| **SO4-2** | 0.85752 | 0.00204 | 0.9 | | 1.0000 |
| **Sr+2** | 0.99643 | 0.01667 | 0.9 | | 1.0000 |
| **Ta+5** | 0.98822 | 0.02 | 0.9 | | 1.0000 |
| **Tc+7** | 0.79457 | 0.00208 | 0.9 | | 1.0000 |
| **Te+6** | 0.80769 | 0.00122 | 0.9 | | 1.0000 |
| **Th+4** | 0.98822 | 0.02 | 0.9 | | 1.0000 |
| **Ti+4** | 0.99652 | 0.01429 | 0.9 | | 1.0000 |
| **Tl+3** | 0.88095 | 0.01 | 0.9 | | 1.0000 |
| **TOC** | | 1 | 0.9 | | |
| **U(TOTAL)** | 0.98822 | 0.02 | 0.9 | | 1.0000 |
| **V+5** | 0.78261 | 0.00116 | 0.9 | | 1.0000 |
| **W+6** | 0.98822 | 0.02 | 0.9 | | 1.0000 |
| **Y+3** | 0.99474 | 0.0125 | 0.9 | | 1.0000 |
| **Zn+2** | 0.96619 | 0.00714 | 0.9 | | 1.0000 |
| **Zr+4** | 0.98308 | 0.05 | 0.9 | | 1.0000 |

| Table A-0-5 HLW Melter Splits | |
|---|---|
| HTWOS-HLW-MELTER-1 (Fraction of feed to vapor) | |
| Component | Liquid/Solid Fractions |
| 106-Ru | 2.50E-01 |
| 113m-Cd | 1.10E-02 |
| 125-Sb | 5.47E-03 |
| 126-Sn | 7.68E-03 |
| 129-I | 7.69E-01 |
| 134-Cs | 2.89E-02 |
| 137-Cs | 2.89E-02 |
| 137m-Ba | 2.89E-02 |
| 14-C | 1.00E+00 |
| 151-Sm | 7.68E-03 |
| 152-Eu | 7.68E-03 |
| 154-Eu | 7.68E-03 |
| 155-Eu | 7.68E-03 |
| 226-Ra | 7.68E-03 |
| 227-Ac | 7.68E-03 |
| 228-Ra | 7.68E-03 |
| 229-Th | 7.68E-03 |
| 231-Pa | 7.68E-03 |
| 232-Th | 7.68E-03 |
| 232-U | 7.68E-03 |
| 233-U | 7.68E-03 |
| 234-U | 7.68E-03 |
| 235-U | 7.68E-03 |
| 236-U | 7.68E-03 |
| 237-Np | 7.68E-03 |
| 238-Pu | 7.68E-03 |
| 238-U | 7.68E-03 |
| 239-Pu | 7.68E-03 |
| 240-Pu | 7.68E-03 |
| 241-Am | 7.68E-03 |
| 241-Pu | 7.68E-03 |
| 242-Cm | 7.68E-03 |
| 242-Pu | 7.68E-03 |
| 243-Am | 7.68E-03 |

| Table A-0-5 HLW Melter Splits | |
|---|---|
| HTWOS-HLW-MELTER-1 (Fraction of feed to vapor) | |
| Component | Liquid/Solid Fractions |
| 243-Cm | 7.68E-03 |
| 244-Cm | 7.68E-03 |
| 3-H | 1.00E+00 |
| 59-Ni | 8.13E-03 |
| 60-Co | 7.68E-03 |
| 63-Ni | 8.13E-03 |
| 79-Se | 4.78E-01 |
| 90-Sr | 4.93E-03 |
| 90-Y | 4.93E-03 |
| 93-Zr | 5.57E-03 |
| 93m-Nb | 7.68E-03 |
| 99-Tc | 6.25E-01 |
| Ag+ | 5.20E-03 |
| Al(OH)4- | 8.26E-03 |
| Al+3 | 8.26E-03 |
| As+5 | 1.77E-02 |
| B+3 | 1.85E-02 |
| Ba+2 | 3.92E-03 |
| Be+2 | 7.68E-03 |
| Bi+3 | 5.47E-03 |
| Ca+2 | 1.13E-02 |
| Cd+2 | 1.10E-02 |
| Ce+3 | 7.68E-03 |
| CN- | 1.60E-02 |
| Co+3 | 7.68E-03 |
| Cr(OH)4- | 1.55E-02 |
| Cr(TOTAL) | 1.55E-02 |
| Cs+ | 2.89E-02 |
| Cu+2 | 5.20E-03 |
| Fe+3 | 9.21E-03 |
| Hg+2 | 1.00E+00 |
| K+ | 1.07E-02 |
| La+3 | 2.00E-02 |
| Li+ | 4.93E-03 |
| Mg+2 | 1.80E-02 |

| Table A-0-5 HLW Melter Splits | |
|---|---|
| HTWOS-HLW-MELTER-1 (Fraction of feed to vapor) | |
| Component | Liquid/Solid Fractions |
| Mn+4 | 3.24E-03 |
| MnO2 | 3.24E-03 |
| MnO4- | 3.24E-03 |
| Mo+6 | 1.55E-02 |
| Na+ | 8.78E-03 |
| Nd+3 | 7.68E-03 |
| Ni+2 | 8.13E-03 |
| Pb+2 | 1.01E-02 |
| Pd+2 | 7.68E-03 |
| PO4-3 | 1.60E-02 |
| Pr+3 | 7.68E-03 |
| Pu+4 | 7.68E-03 |
| Rb+ | 2.89E-02 |
| Rh+3 | 2.00E-02 |
| Ru+3 | 2.44E-01 |
| Sb+5 | 5.47E-03 |
| Se+6 | 4.78E-01 |
| Si+4 | 4.94E-03 |
| SO4-2 | 5.16E-01 |
| Sr+2 | 4.93E-03 |
| Ta+5 | 7.68E-03 |
| Tc+7 | 6.25E-01 |
| Te+6 | 7.14E-02 |
| Th+4 | 7.68E-03 |
| Ti+4 | 3.00E-02 |
| Tl+3 | 7.68E-03 |
| U(TOTAL) | 7.68E-03 |
| V+5 | 7.68E-03 |
| W+6 | 7.68E-03 |
| Y+3 | 7.68E-03 |
| Zn+2 | 8.91E-03 |
| Zr+4 | 5.57E-03 |

**Table A-0-6 HLW OFF-GAS Splits**

| | HTWOS-HLW-SBS | HTWOS-HLW-WESP | HTWOS-HLW-HEME | HLW HEPA1 | HLW HEPA 2 | HTWOS-LAW-VOC-SCRUB | HLW-AG-MORDENITE-COL | HLW-NOX-SCRUB |
|---|---|---|---|---|---|---|---|---|
| | Liquid/Solid Fractions | Liquid/Solid Fractions | Liquid/Solid Fractions | Liquid/Solid Fractions | Liquid/Solid Fractions | Liquid/Solid Fractions | Liquid/Solid Fractions | Liquid/Solid Fractions |
| **106-Ru** | 0.27778 | 0.27778 | 0.00204 | 0.9997 | 0.998 | 0.9 | 0.9 | |
| **113m-Cd** | 0.04087 | 0.04087 | 0.00204 | 0.9997 | 0.998 | 0.9 | 0.9 | |
| **125-Sb** | 0.04875 | 0.04875 | 0.00196 | 0.9997 | 0.998 | 0.9 | 0.9 | |
| **126-Sn** | 0.00234 | 0.00234 | 0.00213 | 0.9997 | 0.998 | 0.9 | 0.9 | |
| **129-I** | 0.48497 | 1 | 1 | 0 | 0 | | 0.999 | |
| **134-Cs** | 0.16338 | 0.16338 | 0.002 | 0.9997 | 0.998 | 0.9 | 0.9 | |
| **137-Cs** | 0.16338 | 0.16338 | 0.002 | 0.9997 | 0.998 | 0.9 | 0.9 | |
| **137m-Ba** | 0.16338 | 0.16338 | 0.002 | 0.9997 | 0.998 | 0.9 | 0.9 | |
| **14-C** | 1 | 1 | 1 | 0 | 0 | | 0.9 | |
| **151-Sm** | 0.00234 | 0.00234 | 0.00213 | 0.9997 | 0.998 | 0.9 | 0.9 | |
| **152-Eu** | 0.00234 | 0.00234 | 0.00213 | 0.9997 | 0.998 | 0.9 | 0.9 | |
| **154-Eu** | 0.00234 | 0.00234 | 0.00213 | 0.9997 | 0.998 | 0.9 | 0.9 | |
| **155-Eu** | 0.00234 | 0.00234 | 0.00213 | 0.9997 | 0.998 | 0.9 | 0.9 | |
| **226-Ra** | 0.00234 | 0.00234 | 0.00213 | 0.9997 | 0.998 | 0.9 | 0.9 | |
| **227-Ac** | 0.00234 | 0.00234 | 0.00213 | 0.9997 | 0.998 | 0.9 | 0.9 | |
| **228-Ra** | 0.00234 | 0.00234 | 0.00213 | 0.9997 | 0.998 | 0.9 | 0.9 | |
| **229-Th** | 0.00234 | 0.00234 | 0.00213 | 0.9997 | 0.998 | 0.9 | 0.9 | |
| **231-Pa** | 0.00234 | 0.00234 | 0.00213 | 0.9997 | 0.998 | 0.9 | 0.9 | |
| **232-Th** | 0.00234 | 0.00234 | 0.00213 | 0.9997 | 0.998 | 0.9 | 0.9 | |
| **232-U** | 0.00234 | 0.00234 | 0.00213 | 0.9997 | 0.998 | 0.9 | 0.9 | |
| **233-U** | 0.00234 | 0.00234 | 0.00213 | 0.9997 | 0.998 | 0.9 | 0.9 | |

**Table A-0-6 HLW OFF-GAS Splits**

| | HTWOS-HLW-SBS | HTWOS-HLW-WESP | HTWOS-HLW-HEME | HLW HEPA1 | HLW HEPA 2 | HTWOS-LAW-VOC-SCRUB | HLW-AG-MORDENITE-COL | HLW-NOX-SCRUB |
|---|---|---|---|---|---|---|---|---|
| | Liquid/Solid Fractions | Liquid/Solid Fractions | Liquid/Solid Fractions | Liquid/Solid Fractions | Liquid/Solid Fractions | Liquid/Solid Fractions | Liquid/Solid Fractions | Liquid/Solid Fractions |
| **234-U** | 0.00234 | 0.00234 | 0.00213 | 0.9997 | 0.998 | 0.9 | 0.9 | |
| **235-U** | 0.00234 | 0.00234 | 0.00213 | 0.9997 | 0.998 | 0.9 | 0.9 | |
| **236-U** | 0.00234 | 0.00234 | 0.00213 | 0.9997 | 0.998 | 0.9 | 0.9 | |
| **237-Np** | 0.00234 | 0.00234 | 0.00213 | 0.9997 | 0.998 | 0.9 | 0.9 | |
| **238-Pu** | 0.00234 | 0.00234 | 0.00213 | 0.9997 | 0.998 | 0.9 | 0.9 | |
| **238-U** | 0.00234 | 0.00234 | 0.00213 | 0.9997 | 0.998 | 0.9 | 0.9 | |
| **239-Pu** | 0.00234 | 0.00234 | 0.00213 | 0.9997 | 0.998 | 0.9 | 0.9 | |
| **240-Pu** | 0.00234 | 0.00234 | 0.00213 | 0.9997 | 0.998 | 0.9 | 0.9 | |
| **241-Am** | 0.00234 | 0.00234 | 0.00213 | 0.9997 | 0.998 | 0.9 | 0.9 | |
| **241-Pu** | 0.00234 | 0.00234 | 0.00213 | 0.9997 | 0.998 | 0.9 | 0.9 | |
| **242-Cm** | 0.00234 | 0.00234 | 0.00213 | 0.9997 | 0.998 | 0.9 | 0.9 | |
| **242-Pu** | 0.00234 | 0.00234 | 0.00213 | 0.9997 | 0.998 | 0.9 | 0.9 | |
| **243-Am** | 0.00234 | 0.00234 | 0.00213 | 0.9997 | 0.998 | 0.9 | 0.9 | |
| **243-Cm** | 0.00234 | 0.00234 | 0.00213 | 0.9997 | 0.998 | 0.9 | 0.9 | |
| **244-Cm** | 0.00234 | 0.00234 | 0.00213 | 0.9997 | 0.998 | 0.9 | 0.9 | |
| **3-H** | 1 | 1 | 1 | 0 | 0 | 0 | 0 | |
| **59-Ni** | 0.00515 | 0.00515 | 0.00213 | 0.9997 | 0.998 | 0.9 | 0.9 | |
| **60-Co** | 0.13699 | 0.13699 | 0.00204 | 0.9997 | 0.998 | 0.9 | 0.9 | |
| **63-Ni** | 0.00515 | 0.00515 | 0.00213 | 0.9997 | 0.998 | 0.9 | 0.9 | |
| **79-Se** | 0.15399 | 0.15399 | 0.00204 | 0.9997 | 0.998 | 0.9 | 0.9 | |
| **90-Sr** | 0.00233 | 0.00233 | 0.00217 | 0.9997 | 0.998 | 0.9 | 0.9 | |
| **90-Y** | 0.00233 | 0.00233 | 0.00217 | 0.9997 | 0.998 | 0.9 | 0.9 | |

**Table A-0-6 HLW OFF-GAS Splits**

| | HTWOS-HLW-SBS | HTWOS-HLW-WESP | HTWOS-HLW-HEME | HLW HEPA1 | HLW HEPA 2 | HTWOS-LAW-VOC-SCRUB | HLW-AG-MORDENITE-COL | HLW-NOX-SCRUB |
|---|---|---|---|---|---|---|---|---|
| | Liquid/Solid Fractions | Liquid/Solid Fractions | Liquid/Solid Fractions | Liquid/Solid Fractions | Liquid/Solid Fractions | Liquid/Solid Fractions | Liquid/Solid Fractions | Liquid/Solid Fractions |
| **93-Zr** | 0.0012 | 0.0012 | 0.00213 | 0.9997 | 0.998 | 0.9 | 0.9 | |
| **93m-Nb** | 0.00234 | 0.00234 | 0.00213 | 0.9997 | 0.998 | 0.9 | 0.9 | |
| **99-Tc** | 0.16393 | 0.00189 | 0.002 | 0.9997 | 0.998 | 0.9 | 0.9 | |
| **Ag+** | 0.00909 | 0.00909 | 0.00213 | 0.9997 | 0.998 | 0.9 | 0.9 | |
| **Al(OH)4-** | 0.00315 | 0.00315 | 0.00213 | 0 | 0 | 0.9 | 0.9 | |
| **Al+3** | 0.00315 | 0.00315 | 0.00213 | 0.9997 | 0.998 | 0.9 | 0.9 | |
| **As+5** | 0.2 | 0.2 | 0.002 | 0.9997 | 0.998 | 0.9 | 0.9 | |
| **B+3** | 0.01648 | 0.01648 | 0.00213 | 0.9997 | 0.998 | 0.9 | 0.9 | |
| **Ba+2** | 0.00769 | 0.00769 | 0.00213 | 0.9997 | 0.998 | 0.9 | 0.9 | |
| **Be+2** | 0.00234 | 0.00234 | 0.00213 | 0.9997 | 0.998 | 0.9 | 0.9 | |
| **Bi+3** | 0.27027 | 0.27027 | 0.00196 | 0.9997 | 0.998 | 0.9 | 0.9 | |
| **C10H12N2O8-4** | | | | 0.9997 | 0.998 | | | |
| **C10H15N2O7-3** | | | | 0.9997 | 0.998 | | | |
| **C12H27O4P** | | | | 0.9997 | 0.998 | | | |
| **C13H28** | | | | 0.9997 | 0.998 | | | |
| **C2Cl4** | | | | 0.9997 | 0.998 | | | |
| **C2H3O2-** | | | | 0.9997 | 0.998 | | | |
| **C2H3O3-** | | | | 0.9997 | 0.998 | | | |
| **C2HCl3** | | | | 0.9997 | 0.998 | | | |
| **C2O4-2** | 0.05482 | 0.05482 | 0.00204 | 0.9997 | 0.998 | 0.9 | 0.9 | 0.99999 |
| **C3H6O** | | | | 0.9997 | 0.998 | | | |
| **C4H10O** | | | | 0.9997 | 0.998 | | | |

**Table A-0-6 HLW OFF-GAS Splits**

| | HTWOS-HLW-SBS | HTWOS-HLW-WESP | HTWOS-HLW-HEME | HLW HEPA1 | HLW HEPA 2 | HTWOS-LAW-VOC-SCRUB | HLW-AG-MORDENITE-COL | HLW-NOX-SCRUB |
|---|---|---|---|---|---|---|---|---|
| | Liquid/Solid Fractions | Liquid/Solid Fractions | Liquid/Solid Fractions | Liquid/Solid Fractions | Liquid/Solid Fractions | Liquid/Solid Fractions | Liquid/Solid Fractions | Liquid/Solid Fractions |
| C4H8O | | | | 0.9997 | 0.998 | | | |
| C5H5N | | | | 0.9997 | 0.998 | | | |
| C6H5NO2 | | | | 0.9997 | 0.998 | | | |
| C6H5O7-3 | | | | 0.9997 | 0.998 | | | |
| C6H6 | | | | 0.9997 | 0.998 | | | |
| C7H6N2O4 | | | | 0.9997 | 0.998 | | | |
| C7H8O | | | | 0.9997 | 0.998 | | | |
| CH2Cl2 | | | | 0.9997 | 0.998 | | | |
| CHCl3 | | | | 0.9997 | 0.998 | | | |
| CHO2- | | | | 0.9997 | 0.998 | | | |
| Ca+2 | 0.02087 | 0.02087 | 0.00217 | 0.9997 | 0.998 | 0.9 | 0.9 | |
| Cd+2 | 0.04087 | 0.04087 | 0.00204 | 0.9997 | 0.998 | 0.9 | 0.9 | |
| Ce+3 | 0.00303 | 0.00303 | 0.00213 | 0.9997 | 0.998 | 0.9 | 0.9 | |
| Cl- | 0.05482 | 0.05482 | 0.00204 | 0.9997 | 0.998 | 0.9 | 0.9 | |
| CN- | 0.05482 | 0.05482 | 0.00204 | 0.9997 | 0.998 | 0.9 | 0.9 | |
| Co+3 | 0.13699 | 0.13699 | 0.00204 | 0.9997 | 0.998 | 0.9 | 0.9 | |
| CO3-2 | 0.05482 | 0.05482 | 0.00204 | 0.9997 | 0.998 | 0.9 | 0.9 | |
| Cr(OH)4- | 0.14815 | 0.14815 | 0.00196 | 0 | 0 | 0.9 | 0.9 | |
| Cr(TOTAL) | 0.14815 | 0.14815 | 0.00196 | 0.9997 | 0.998 | 0.9 | 0.9 | |
| Cs+ | 0.16338 | 0.16338 | 0.002 | 0.9997 | 0.998 | 0.9 | 0.9 | |
| Cu+2 | 0.01429 | 0.01429 | 0.00213 | 0.9997 | 0.998 | 0.9 | 0.9 | |
| F- | 0.05482 | 0.05482 | 0.00204 | 0.9997 | 0.998 | 0.9 | 0.9 | |

**Table A-0-6 HLW OFF-GAS Splits**

| | HTWOS-HLW-SBS | HTWOS-HLW-WESP | HTWOS-HLW-HEME | HLW HEPA1 | HLW HEPA 2 | HTWOS-LAW-VOC-SCRUB | HLW-AG-MORDENITE-COL | HLW-NOX-SCRUB |
|---|---|---|---|---|---|---|---|---|
| | Liquid/Solid Fractions | Liquid/Solid Fractions | Liquid/Solid Fractions | Liquid/Solid Fractions | Liquid/Solid Fractions | Liquid/Solid Fractions | Liquid/Solid Fractions | Liquid/Solid Fractions |
| **Fe+3** | 0.00267 | 0.00267 | 0.00213 | 0.9997 | 0.998 | 0.9 | 0.9 | |
| **H+** | 0 | 0 | 0.00213 | 0.9997 | 0.998 | 0.9 | 0.9 | |
| **H2O** | NA | NA | NA | 0 | 0 | | | |
| **Hg+2** | 0.71429 | 1 | 1 | 0 | 0 | 0.999 | | |
| **K+** | 0.04311 | 0.04311 | 0.002 | 0.9997 | 0.998 | 0.9 | 0.9 | |
| **La+3** | 0.00145 | 0.00145 | 0.00217 | 0.9997 | 0.998 | 0.9 | 0.9 | |
| **Li+** | 0.04077 | 0.04077 | 0.00204 | 0.9997 | 0.998 | 0.9 | 0.9 | |
| **Mg+2** | 0.00366 | 0.00366 | 0.00213 | 0.9997 | 0.998 | 0.9 | 0.9 | |
| **Mn+4** | 0.00551 | 0.00551 | 0.00217 | 0.9997 | 0.998 | 0.9 | 0.9 | |
| **MnO2** | 0.00551 | 0.00551 | 0.00217 | 0 | 0 | 0.9 | 0.9 | |
| **MnO4-** | 0.00551 | 0.00551 | 0.00217 | 0 | 0 | 0.9 | 0.9 | |
| **Mo+6** | 0.11494 | 0.11494 | 0.00204 | 0.9997 | 0.998 | 0.9 | 0.9 | |
| **Na+** | 0.05482 | 0.05482 | 0.00204 | 0.9997 | 0.998 | 0.9 | 0.9 | |
| **Nd+3** | 0.00196 | 0.00196 | 0.00217 | 0.9997 | 0.998 | 0.9 | 0.9 | |
| **NH3** | 0 | 0 | 0 | 0 | 0 | 0.9 | 0.9 | |
| **NH4+** | 0.1 | 0.1 | 0.00204 | 0 | 0 | 0.9 | 0.9 | |
| **Ni+2** | 0.00515 | 0.00515 | 0.00213 | 0.9997 | 0.998 | 0.9 | 0.9 | |
| **NO2-** | 0.05482 | 0.05482 | 0.00204 | 0.9997 | 0.998 | 0.9 | 0.9 | |
| **NO3-** | 0.05482 | 0.05482 | 0.00204 | 0.9997 | 0.998 | 0.9 | 0.9 | |
| **O(BOUND)** | 0.05482 | 0 | 0 | 0 | 0 | | 0.9 | |
| **OH(BOUND)** | 0.05482 | 0.05482 | 0.00204 | 0 | 0 | 0.9 | | |
| **OH-** | 0.05482 | 0.05482 | 0.00204 | 0.9997 | 0.998 | 0.9 | 0.9 | |

**Table A-0-6 HLW OFF-GAS Splits**

| | HTWOS-HLW-SBS | HTWOS-HLW-WESP | HTWOS-HLW-HEME | HLW HEPA1 | HLW HEPA 2 | HTWOS-LAW-VOC-SCRUB | HLW-AG-MORDENITE-COL | HLW-NOX-SCRUB |
|---|---|---|---|---|---|---|---|---|
| | Liquid/Solid Fractions | Liquid/Solid Fractions | Liquid/Solid Fractions | Liquid/Solid Fractions | Liquid/Solid Fractions | Liquid/Solid Fractions | Liquid/Solid Fractions | Liquid/Solid Fractions |
| **Pb+2** | 0.04545 | 0.04545 | 0.00204 | 0.9997 | 0.998 | 0.9 | 0.9 | |
| **Pd+2** | 0.00234 | 0.00234 | 0.00213 | 0.9997 | 0.998 | 0.9 | 0.9 | |
| **PO4-3** | 0.05482 | 0.05482 | 0.00204 | 0.9997 | 0.998 | 0.9 | 0.9 | |
| **Pr+3** | 0.00234 | 0.00234 | 0.00213 | 0.9997 | 0.998 | 0.9 | 0.9 | |
| **Pu+4** | 0.00234 | 0.00234 | 0.00213 | 0.9997 | 0.998 | 0.9 | 0.9 | |
| **Rb+** | 0.16338 | 0.16338 | 0.002 | 0.9997 | 0.998 | 0.9 | 0.9 | |
| **Rh+3** | 0.16338 | 0.16338 | 0.002 | 0.9997 | 0.998 | 0.9 | 0.9 | |
| **Ru+3** | 0.27778 | 0.27778 | 0.00204 | 0.9997 | 0.998 | 0.9 | 0.9 | |
| **Sb+5** | 0.04848 | 0.04848 | 0.00196 | 0.9997 | 0.998 | 0.9 | 0.9 | |
| **Se+6** | 0.15399 | 0.15399 | 0.00204 | 0.9997 | 0.998 | 0.9 | 0.9 | |
| **Si+4** | 0.0023 | 0.0023 | 0.00213 | 0.9997 | 0.998 | 0.9 | 0.9 | |
| **SO4-2** | 0.20191 | 0.20191 | 0.00204 | 0.9997 | 0.998 | 0.9 | 0.9 | |
| **Sr+2** | 0.00233 | 0.00233 | 0.00217 | 0.9997 | 0.998 | 0.9 | 0.9 | |
| **Ta+5** | 0.00234 | 0.00234 | 0.00213 | 0.9997 | 0.998 | 0.9 | 0.9 | |
| **Tc+7** | 0.25641 | 0.25641 | 0.002 | 0.9997 | 0.998 | 0.9 | 0.9 | |
| **Te+6** | 0.05556 | 0.05556 | 0.00204 | 0.9997 | 0.998 | 0.9 | 0.9 | |
| **Th+4** | 0.00234 | 0.00234 | 0.00213 | 0.9997 | 0.998 | 0.9 | 0.9 | |
| **Ti+4** | 0.19231 | 0.19231 | 0.002 | 0.9997 | 0.998 | 0.9 | 0.9 | |
| **Tl+3** | 0.15399 | 0.15399 | 0.00204 | 0.9997 | 0.998 | 0.9 | 0.9 | |
| **TOC** | 0 | 0 | 1 | 0 | 0 | 0.9 | 0.9 | |
| **U(TOTAL)** | 0.00234 | 0.00234 | 0.00213 | 0.9997 | 0.998 | 0.9 | 0.9 | |
| **V+5** | 0.21739 | 0.21739 | 0.002 | 0.9997 | 0.998 | 0.9 | 0.9 | |

**Table A-0-6 HLW OFF-GAS Splits**

| | HTWOS-HLW-SBS | HTWOS-HLW-WESP | HTWOS-HLW-HEME | HLW HEPA1 | HLW HEPA 2 | HTWOS-LAW-VOC-SCRUB | HLW-AG-MORDENITE-COL | HLW-NOX-SCRUB |
|---|---|---|---|---|---|---|---|---|
| | Liquid/Solid Fractions | Liquid/Solid Fractions | Liquid/Solid Fractions | Liquid/Solid Fractions | Liquid/Solid Fractions | Liquid/Solid Fractions | Liquid/Solid Fractions | Liquid/Solid Fractions |
| **W+6** | 0.00234 | 0.00234 | 0.00213 | 0.9997 | 0.998 | 0.9 | 0.9 | |
| **Y+3** | 0.00526 | 0.00526 | 0.00213 | 0.9997 | 0.998 | 0.9 | 0.9 | |
| **Zn+2** | 0.00705 | 0.00705 | 0.00213 | 0.9997 | 0.998 | 0.9 | 0.9 | |
| **Zr+4** | 0.0012 | 0.0012 | 0.00213 | 0.9997 | 0.998 | 0.9 | 0.9 | |

| Table A-0-7 ETF-Splits (shift-to-solids) | | |
|---|---|---|
| Oxide Components | | |
| Ac2O3 | 0.99999 | |
| Ag2O | 0.99999 | |
| Al2O3 | 0.99999 | |
| Am2O3 | 0.99999 | |
| As2O5 | 0.99999 | |
| B2O3 | 0.99999 | |
| BaO | 0.99999 | |
| Bi2O3 | 0.99999 | |
| CdO | 0.99999 | |
| CeO2 | 0.99999 | |
| Cm2O3 | 0.99999 | |
| Co2O3 | 0.99999 | |
| Cr2O3 | 0.99999 | |
| Cs2O | 0.99999 | |
| CuO | 0.99999 | |
| Dy2O3 | 0.99999 | |
| Eu2O3 | 0.99999 | |
| Fe2O3 | 0.99999 | |
| HgO | 0.99999 | |
| K2O | 0.99999 | |
| La2O3 | 0.99999 | |
| Li2O | 0.99999 | |
| MnO2 | 0.99999 | |
| MoO3 | 0.99999 | |
| Na2O | 0.99999 | |
| Nb2O5 | 0.99999 | |
| Nd2O3 | 0.99999 | |
| NiO | 0.99999 | |
| NpO2 | 0.99999 | |
| P2O5 | 0.99999 | |
| PbO | 0.99999 | |
| PdO | 0.99999 | |
| Pr2O3 | 0.99999 | |
| PuO2 | 0.99999 | |

| Table A-0-7 ETF-Splits (shift-to-solids) | | |
|---|---|---|
| Rb2O | 0.99999 | |
| Re2O3 | 0.99999 | |
| Rh2O3 | 0.99999 | |
| Ru2O3 | 0.99999 | |
| Sb2O3 | 0.99999 | |
| SeO2 | 0.99999 | |
| SiO2 | 0.99999 | |
| Sm2O3 | 0.99999 | |
| SnO2 | 0.99999 | |
| SO3 | 0.99999 | |
| SrO | 0.99999 | |
| Ta2O5 | 0.99999 | |
| Tc2O7 | 0.99999 | |
| TeO2 | 0.99999 | |
| ThO2 | 0.99999 | |
| TiO2 | 0.99999 | |
| Tl2O3 | 0.99999 | |
| U3O8 | 0.99999 | |
| V2O5 | 0.99999 | |
| WO3 | 0.99999 | |
| Y2O3 | 0.99999 | |
| ZnO | 0.99999 | |
| ZrO2 | 0.99999 | |
| Glass Former Components | | |
| Ac2O3 | 0.99999 | |
| B2O3 | 0.99999 | |
| C2H22O11 | 0.99999 | |
| CaO | 0.99999 | |
| Fe2O3 | 0.99999 | |
| Li2O | 0.99999 | |
| MgO | 0.99999 | |
| Na2O | 0.99999 | |
| SiO2 | 0.99999 | |
| TiO2 | 0.99999 | |
| ZnO | 0.99999 | |
| ZrO2 | 0.99999 | |

**Table A-0-8 SUP-TRU-DRYER Dryer and Condenser Splits**

| Components | Dryer Fraction to Condenser | Condenser Fraction to Stack |
|---|---|---|
| 106-Ru | 1.29E-06 | 1.21E-04 |
| 113m-Cd | 1.00E-03 | 1.93E-03 |
| 125-Sb | 1.30E-07 | 1.30E-07 |
| 126-Sn | 1.30E-07 | 1.30E-07 |
| 129-I | 2.64E-01 | 1.38E-03 |
| 134-Cs | 1.00E-08 | 5.37E-05 |
| 137-Cs | 1.00E-08 | 5.37E-05 |
| 137m-Ba | 1.00E-08 | 5.37E-05 |
| 14-C | 1.00E-03 | 1.93E-03 |
| 151-Sm | 1.30E-07 | 1.30E-07 |
| 152-Eu | 1.30E-07 | 1.30E-07 |
| 154-Eu | 1.30E-07 | 1.30E-07 |
| 155-Eu | 1.30E-07 | 1.30E-07 |
| 226-Ra | 1.30E-07 | 1.30E-07 |
| 227-Ac | 1.30E-07 | 1.30E-07 |
| 228-Ra | 1.30E-07 | 1.30E-07 |
| 229-Th | 1.30E-07 | 1.30E-07 |
| 231-Pa | 1.30E-07 | 1.30E-07 |
| 232-Th | 1.30E-07 | 1.30E-07 |
| 232-U | 1.00E-03 | 1.93E-03 |
| 233-U | 1.00E-03 | 1.93E-03 |
| 234-U | 1.00E-03 | 1.93E-03 |
| 235-U | 1.00E-03 | 1.93E-03 |
| 236-U | 1.00E-03 | 1.93E-03 |
| 237-Np | 1.00E-03 | 1.93E-03 |
| 238-Pu | 2.70E-07 | 4.03E-04 |
| 238-U | 1.00E-03 | 1.93E-03 |
| 239-Pu | 2.70E-07 | 4.03E-04 |
| 240-Pu | 2.70E-07 | 4.03E-04 |
| 241-Am | 7.20E-07 | 3.95E-04 |
| 241-Pu | 2.70E-07 | 4.03E-04 |
| 242-Cm | 1.00E-03 | 1.93E-03 |
| 242-Pu | 2.70E-07 | 4.03E-04 |
| 243-Am | 7.20E-07 | 3.95E-04 |
| 243-Cm | 1.00E-03 | 1.93E-03 |

**Table A-0-8 SUP-TRU-DRYER Dryer and Condenser Splits**

| Components | Dryer Fraction to Condenser | Condenser Fraction to Stack |
|---|---|---|
| 244-Cm | 1.00E-03 | 1.93E-03 |
| 3-H | 3.00E-01 | 2.09E-04 |
| 59-Ni | 1.00E-03 | 1.93E-03 |
| 60-Co | 1.00E-03 | 1.93E-03 |
| 63-Ni | 1.00E-03 | 1.93E-03 |
| 79-Se | 1.00E-03 | 1.93E-03 |
| 90-Sr | 4.37E-06 | 1.07E-04 |
| 90-Y | 4.37E-06 | 1.07E-04 |
| 93-Zr | 1.30E-07 | 1.30E-07 |
| 93m-Nb | 1.00E-03 | 1.93E-03 |
| 99-Tc | | 1.93E-03 |
| Ag+ | 1.30E-07 | 1.30E-07 |
| Al(OH)4- | 6.69E-04 | 1.93E-03 |
| Al+3 | 6.69E-04 | 1.93E-03 |
| As+5 | 1.30E-07 | 1.30E-07 |
| B+3 | 1.00E-03 | 1.93E-03 |
| Ba+2 | 1.00E-03 | 1.93E-03 |
| Be+2 | 1.30E-07 | 1.30E-07 |
| Bi+3 | 1.30E-07 | 1.30E-07 |
| C2O4-2 | 1.20E-07 | 1.20E-07 |
| Ca+2 | 1.01E-03 | 2.01E-03 |
| Cd+2 | 1.00E-03 | 1.93E-03 |
| Ce+3 | 1.30E-07 | 1.30E-07 |
| Cl- | 1.93E-03 | 1.61E-04 |
| CN- | 1.00E-03 | 1.93E-03 |
| Co+3 | 1.00E-03 | 1.93E-03 |
| CO3-2 | 1.00E-03 | 1.93E-03 |
| Cr(OH)4- | 2.87E-05 | 2.36E-04 |
| Cr(TOTAL) | 2.87E-05 | 2.36E-04 |
| Cs+ | 1.00E-08 | 5.37E-05 |
| Cu+2 | 1.00E-03 | 1.93E-03 |
| F- | 4.18E-05 | 3.17E-04 |
| Fe+3 | 1.00E-03 | 1.93E-03 |
| Hg+2 | 1.00E-03 | 1.93E-03 |
| K+ | 2.87E-04 | 1.93E-03 |

**Table A-0-8 SUP-TRU-DRYER Dryer and Condenser Splits**

| Components | Dryer Fraction to Condenser | Condenser Fraction to Stack |
|---|---|---|
| La+3 | 1.30E-07 | 1.30E-07 |
| Li+ | 1.30E-07 | 1.30E-07 |
| Mg+2 | 1.01E-03 | 1.98E-03 |
| Mn+4 | 1.00E-03 | 1.93E-03 |
| Mo+6 | 1.00E-03 | 1.93E-03 |
| Na+ | 3.35E-05 | 1.93E-03 |
| Nd+3 | 1.30E-07 | 1.30E-07 |
| NH3 | 9.00E-01 | 7.62E-02 |
| Ni+2 | 1.00E-03 | 1.93E-03 |
| NO2- | 4.18E-04 | 1.21E-04 |
| NO3- | 1.76E-03 | 1.21E-04 |
| OH(BOUND) | 1.30E-07 | 1.30E-07 |
| OH- | 1.00E-03 | 1.93E-03 |
| Pb+2 | 3.24E-02 | 4.50E-05 |
| Pd+2 | 1.30E-07 | 1.30E-07 |
| PO4-3 | 1.00E-03 | 1.93E-03 |
| Pr+3 | 1.30E-07 | 1.30E-07 |
| Pu+4 | 2.70E-07 | 4.03E-04 |
| Rb+ | 1.30E-07 | 1.30E-07 |
| Rh+3 | 1.30E-07 | 1.30E-07 |
| Ru+3 | 1.29E-06 | 1.21E-04 |
| Sb+5 | 1.30E-07 | 1.30E-07 |
| Se+6 | 1.00E-03 | 1.93E-03 |
| Si+4 | 1.00E-03 | 1.93E-03 |
| SO4-2 | 7.17E-04 | 1.76E-04 |
| Sr+2 | 4.37E-06 | 1.07E-04 |
| Ta+5 | | 1.30E-07 |
| Tc+7 | 1.00E-03 | 1.93E-03 |
| Te+6 | 1.30E-07 | 1.30E-07 |
| Th+4 | 1.30E-07 | 1.30E-07 |
| Ti+4 | 1.30E-07 | 1.30E-07 |
| Tl+3 | 1.30E-07 | 1.30E-07 |
| TOC | 2.87E-02 | 1.93E-03 |
| U(TOTAL) | 1.00E-03 | 1.93E-03 |
| V+5 | 1.30E-07 | 1.30E-07 |

**Table A-0-8 SUP-TRU-DRYER Dryer and Condenser Splits**

| Components | Dryer Fraction to Condenser | Condenser Fraction to Stack |
|---|---|---|
| W+6 | 1.00E-03 | 1.93E-03 |
| Y+3 | 4.37E-06 | 1.07E-04 |
| Zn+2 | 1.00E-03 | 1.93E-03 |
| Zr+4 | 1.30E-07 | 1.30E-07 |

| Table A-0-9 BV Dryer/Condenser Splits | | |
|---|---|---|
| **Component** | **Dryer** | **Condenser** |
| | **Fraction to Condenser** | **Fraction to Liquid** |
| 106-Ru | 1.29E-06 | |
| 113m-Cd | 9.99E-04 | 1.54E-03 |
| 125-Sb | 1.67E-02 | 3.58E-05 |
| 126-Sn | 3.24E-02 | 3.58E-05 |
| 129-I | 2.64E-01 | 1.10E-03 |
| 134-Cs | 1.08E-08 | 4.27E-05 |
| 137-Cs | 1.08E-08 | 4.27E-05 |
| 137m-Ba | 1.08E-08 | 4.27E-05 |
| 14-C | 1.00E-03 | 1.54E-03 |
| 151-Sm | 1.00E-03 | 3.20E-04 |
| 152-Eu | 1.00E-03 | 3.20E-04 |
| 154-Eu | 1.00E-03 | 3.20E-04 |
| 155-Eu | 1.00E-03 | 3.20E-04 |
| 226-Ra | 9.25E-04 | 2.00E-03 |
| 227-Ac | 9.25E-04 | 1.54E-03 |
| 228-Ra | 9.25E-04 | 2.00E-03 |
| 229-Th | 6.02E-04 | 1.54E-03 |
| 231-Pa | 6.02E-04 | 1.54E-03 |
| 232-Th | 6.02E-04 | 1.54E-03 |
| 232-U | 1.00E-03 | 1.54E-03 |
| 233-U | 1.00E-03 | 1.54E-03 |
| 234-U | 1.00E-03 | 1.54E-03 |
| 235-U | 1.00E-03 | 1.54E-03 |
| 236-U | 1.00E-03 | 1.54E-03 |
| 237-Np | 1.00E-03 | 1.54E-03 |
| 238-Pu | 2.71E-07 | 3.20E-04 |
| 238-U | 1.00E-03 | 1.54E-03 |
| 239-Pu | 2.71E-07 | 3.20E-04 |
| 240-Pu | 2.71E-07 | 3.20E-04 |
| 241-Am | 7.17E-07 | 3.20E-04 |
| 241-Pu | 2.71E-07 | 3.20E-04 |
| 242-Cm | 1.00E-03 | 1.54E-03 |
| 242-Pu | 2.71E-07 | 3.20E-04 |
| 243-Am | 7.17E-07 | 3.20E-04 |
| 243-Cm | 1.00E-03 | 1.54E-03 |

| Table A-0-9 BV Dryer/Condenser Splits | | |
|---|---|---|
| **Component** | **Dryer** | **Condenser** |
| | **Fraction to Condenser** | **Fraction to Liquid** |
| 244-Cm | 1.00E-03 | 1.54E-03 |
| 3-H | | 1.00E+00 |
| 59-Ni | 9.93E-04 | 1.54E-03 |
| 60-Co | 1.00E-03 | 1.54E-03 |
| 63-Ni | 9.93E-04 | 1.54E-03 |
| 79-Se | 1.00E-03 | 1.54E-03 |
| 90-Sr | 4.37E-06 | 8.55E-05 |
| 90-Y | 4.37E-06 | 8.55E-05 |
| 93-Zr | 4.37E-06 | 2.00E-03 |
| 93m-Nb | 1.00E-03 | 1.81E-03 |
| 99-Tc | 1.00E-03 | 1.54E-03 |
| Ag+ | 6.22E-04 | 1.88E-03 |
| Al(OH)4- | 2.13E-02 | 5.17E-03 |
| Al+3 | 6.69E-04 | 1.54E-03 |
| As+5 | 1.00E-03 | 1.54E-03 |
| B+3 | 1.00E-03 | 1.77E-03 |
| Ba+2 | 9.25E-04 | 2.00E-03 |
| Be+2 | | 3.50E-02 |
| Bi+3 | 3.24E-02 | 3.58E-05 |
| C2O4-2 | 2.87E-02 | 1.53E-06 |
| Ca+2 | | 5.81E-02 |
| Cd+2 | 9.99E-04 | 1.54E-03 |
| Ce+3 | 1.00E-03 | 1.54E-03 |
| Cl- | 1.92E-03 | 1.30E-04 |
| CN- | 1.00E-03 | 9.62E-05 |
| Co+3 | 1.00E-03 | 1.54E-03 |
| CO3-2 | 1.00E-03 | 1.54E-03 |
| Cr(OH)4- | 2.81E-05 | 1.88E-04 |
| Cr(TOTAL) | 2.13E-02 | 5.17E-03 |
| Cs+ | 2.13E-02 | 5.17E-03 |
| Cu+2 | 6.22E-04 | 1.88E-04 |
| F- | 4.18E-05 | 5.30E-04 |
| Fe+3 | 9.09E-04 | 2.00E-03 |
| Hg+2 | 1.00E-03 | 1.54E-03 |
| K+ | 2.85E-04 | 1.57E-03 |
| La+3 | 9.25E-04 | 1.54E-03 |

| Table A-0-9 BV Dryer/Condenser Splits | | |
|---|---|---|
| **Component** | **Dryer** | **Condenser** |
| | **Fraction to Condenser** | **Fraction to Liquid** |
| Li+ | 3.31E-05 | 1.60E-03 |
| Mg+2 | | 3.50E-02 |
| Mn+4 | 9.90E-04 | 1.62E-03 |
| MnO4- | 2.13E-02 | 5.17E-03 |
| Mo+6 | 1.00E-03 | 1.62E-03 |
| Na+ | 3.31E-05 | 1.60E-03 |
| Nd+3 | 1.00E-03 | 1.54E-03 |
| NH3 | 9.00E-01 | 8.06E-02 |
| Ni+2 | 9.93E-04 | 1.54E-03 |
| NO2- | 4.18E-04 | 9.62E-05 |
| NO3- | 1.76E-03 | 9.62E-05 |
| O(BOUND) | 2.13E-02 | 5.17E-03 |
| OH(BOUND) | 2.13E-02 | 5.17E-03 |
| OH- | 1.00E-03 | 1.54E-03 |
| Pb+2 | 3.24E-02 | 3.58E-05 |
| Pd+2 | 2.13E-02 | 5.17E-03 |
| PO4-3 | 1.00E-03 | 1.54E-03 |
| Pr+3 | 2.13E-02 | 5.17E-03 |
| Pu+4 | 2.13E-02 | 5.17E-03 |
| Rb+ | 2.13E-02 | 5.17E-03 |
| Rh+3 | 2.13E-02 | 5.17E-03 |
| Ru+3 | 2.13E-02 | 5.17E-03 |
| Sb+5 | 1.67E-02 | 3.58E-05 |
| Se+6 | 1.00E-03 | 1.54E-03 |
| Si+4 | 1.00E-03 | 4.35E-03 |
| SO4-2 | 5.90E-04 | 2.38E-04 |
| Sr+2 | 4.37E-06 | 8.55E-05 |
| Ta+5 | 2.13E-02 | 5.17E-03 |
| Tc+7 | 2.13E-02 | 5.17E-03 |
| Te+6 | 2.13E-02 | 5.17E-03 |
| Th+4 | 6.02E-04 | 1.54E-03 |
| Ti+4 | 2.81E-05 | 2.00E-03 |
| Tl+3 | 1.67E-02 | 3.58E-05 |
| TOC | 2.87E-02 | 1.54E-03 |
| U(TOTAL) | 1.00E-03 | 1.54E-03 |
| V+5 | 2.81E-05 | 1.09E-03 |

| Table A-0-9 BV Dryer/Condenser Splits | | |
|---|---|---|
| **Component** | **Dryer** | **Condenser** |
| | **Fraction to Condenser** | **Fraction to Liquid** |
| W+6 | 2.13E-02 | 5.17E-03 |
| Y+3 | 4.37E-06 | 8.55E-05 |
| Zn+2 | 9.67E-04 | 1.62E-03 |
| Zr+4 | 4.37E-06 | 2.00E-03 |
| Ac2O3 | 2.13E-02 | 5.17E-03 |
| Ag2O | 6.22E-04 | 1.88E-03 |
| Al2O3 | 6.69E-04 | 1.54E-03 |
| Am2O3 | 2.13E-02 | 5.17E-03 |
| As2O5 | 1.00E-03 | 1.54E-03 |
| B2O3 | 1.00E-03 | 1.77E-03 |
| BaO | 9.25E-04 | 2.00E-03 |
| BeO | | 3.50E-02 |
| Bi2O3 | 3.24E-02 | 3.58E-05 |
| CaO | | 5.81E-02 |
| CdO | 9.99E-04 | 1.54E-03 |
| CeO2 | 1.00E-03 | 1.54E-03 |
| Cm2O3 | 2.13E-02 | 5.17E-03 |
| Co2O3 | 1.00E-03 | 1.54E-03 |
| Cr2O3 | 2.81E-05 | 1.88E-04 |
| Cs2O | 2.13E-02 | 5.17E-03 |
| CuO | 6.22E-04 | 1.88E-04 |
| Dy2O3 | 2.13E-02 | 5.17E-03 |
| Eu2O3 | 2.13E-02 | 5.17E-03 |
| Fe2O3 | 9.09E-04 | 2.00E-03 |
| HgO | 1.00E-03 | 1.54E-03 |
| K2O | 2.85E-04 | 1.57E-03 |
| La2O3 | 9.25E-04 | 1.54E-03 |
| Li2O | 3.31E-05 | 1.60E-03 |
| MgO | | 3.50E-02 |
| MnO2 | 9.90E-04 | 1.62E-03 |
| MoO3 | 1.00E-03 | 1.62E-03 |
| Na2O | 3.31E-05 | 1.60E-03 |
| Nb2O5 | 2.13E-02 | 5.17E-03 |
| Nd2O3 | 1.00E-03 | 1.54E-03 |
| NiO | 9.93E-04 | 1.54E-03 |
| NpO2 | 2.13E-02 | 5.17E-03 |

| Table A-0-9 BV Dryer/Condenser Splits | | |
|---|---|---|
| **Component** | **Dryer** | **Condenser** |
| | **Fraction to Condenser** | **Fraction to Liquid** |
| P2O5 | 1.00E-03 | 1.54E-03 |
| PbO | 3.24E-02 | 3.58E-05 |
| PdO | 2.13E-02 | 5.17E-03 |
| Pr2O3 | 2.13E-02 | 5.17E-03 |
| PuO2 | 2.13E-02 | 5.17E-03 |
| Rb2O | 2.13E-02 | 5.17E-03 |
| Re2O3 | 2.13E-02 | 5.17E-03 |
| Rh2O3 | 2.13E-02 | 5.17E-03 |
| Ru2O3 | 2.13E-02 | 5.17E-03 |
| Sb2O3 | 1.67E-02 | 3.58E-05 |
| SeO2 | 1.00E-03 | 1.54E-03 |
| SiO2 | 1.00E-03 | 4.35E-03 |
| Sm2O3 | 2.13E-02 | 5.17E-03 |
| SnO2 | 2.13E-02 | 5.17E-03 |
| SO3 | 5.90E-04 | 2.38E-04 |
| SrO | 4.37E-06 | 8.55E-05 |
| Ta2O5 | 2.13E-02 | 5.17E-03 |
| Tc2O7 | 2.13E-02 | 5.17E-03 |
| TeO2 | 2.13E-02 | 5.17E-03 |
| ThO2 | 6.02E-04 | 1.54E-03 |
| TiO2 | 2.81E-05 | 2.00E-03 |
| Tl2O3 | 1.67E-02 | 3.58E-05 |
| U3O8 | 1.00E-03 | 1.54E-03 |
| V2O5 | 2.81E-05 | 1.09E-03 |
| WO3 | 2.13E-02 | 5.17E-03 |
| Y2O3 | 4.37E-06 | 8.55E-05 |
| ZnO | 9.67E-04 | 1.62E-03 |
| ZrO2 | 4.37E-06 | 2.00E-03 |

| Table A-0-10 BV Melter Splits | |
|---|---|
| Component | Fraction to Off-Gas |
| 113m-Cd | 3.00E-01 |
| 125-Sb | 1.00E-04 |
| 129-I | 9.00E-01 |
| 134-Cs | 1.00E-02 |
| 137-Cs | 1.00E-02 |
| 137m-Ba | 1.00E-02 |
| 14-C | 1.00E+00 |
| 151-Sm | 1.00E-04 |
| 152-Eu | 1.00E-04 |
| 154-Eu | 1.00E-04 |
| 155-Eu | 1.00E-04 |
| 226-Ra | 1.00E-02 |
| 228-Ra | 1.00E-02 |
| 234-U | 1.00E-04 |
| 237-Np | 1.00E-04 |
| 238-Pu | 1.00E-04 |
| 239-Pu | 1.00E-04 |
| 240-Pu | 1.00E-04 |
| 241-Am | 1.00E-04 |
| 241-Pu | 1.00E-04 |
| 242-Cm | 1.00E-04 |
| 242-Pu | 1.00E-04 |
| 243-Am | 1.00E-04 |
| 243-Cm | 1.00E-04 |
| 244-Cm | 1.00E-04 |
| 3-H | 1.00E+00 |
| 60-Co | 1.00E-04 |
| 79-Se | 1.00E-02 |
| 90-Sr | 1.00E-04 |
| 90-Y | 1.00E-04 |
| 93m-Nb | 1.00E-04 |
| 99-Tc | 3.50E-01 |
| Ag+ | 1.00E-02 |
| As+5 | 3.00E-01 |
| Ba+2 | 1.00E-02 |

| Table A-0-10 BV Melter Splits | |
|---|---|
| Component | Fraction to Off-Gas |
| Cd+2 | 3.00E-01 |
| H2O | 1.00E+00 |
| Hg+2 | 1.00E+00 |
| OH- | 1.00E+00 |
| Pb+2 | 1.00E-01 |
| Sb+5 | 1.00E-04 |
| Se+6 | 1.00E-02 |
| Sr+2 | 1.00E-04 |
| Y+3 | 1.00E-04 |
| Ag2O | 1.00E-02 |
| As2O5 | 3.00E-01 |
| BaO | 1.00E-02 |
| CdO | 3.00E-01 |
| HgO | 1.00E+00 |
| P2O5 | 5.56E-04 |
| PbO | 1.00E-01 |
| Sb2O3 | 1.00E-04 |
| SeO2 | 1.00E-02 |
| SrO | 1.00E-04 |
| Y2O3 | 1.00E-04 |

| Table A-0-11 BV-HYDROSONIC-SCR Splits | |
|---|---|
| **Oxide Components** | **Fraction to Condensate** |
| Ac2O3 | 9.90E-01 |
| Ag2O | 9.90E-01 |
| Al2O3 | 9.90E-01 |
| Am2O3 | 9.90E-01 |
| As2O5 | 9.90E-01 |
| B2O3 | 9.90E-01 |
| BaO | 9.90E-01 |
| BeO | 9.90E-01 |
| Bi2O3 | 9.90E-01 |
| CaO | 9.90E-01 |
| CdO | 9.90E-01 |
| CeO2 | 9.90E-01 |
| Cl- | 9.90E-01 |
| Cm2O3 | 9.90E-01 |
| Co2O3 | 9.90E-01 |
| Cr2O3 | 9.90E-01 |
| Cs2O | 9.90E-01 |
| CuO | 9.90E-01 |
| Dy2O3 | 9.90E-01 |
| Eu2O3 | 9.90E-01 |
| F- | 9.90E-01 |
| Fe2O3 | 9.90E-01 |
| HgO | 9.70E-01 |
| K2O | 9.90E-01 |
| La2O3 | 9.90E-01 |
| Li2O | 9.90E-01 |
| MgO | 9.90E-01 |
| MnO2 | 9.90E-01 |
| MoO3 | 9.90E-01 |
| Na2O | 9.90E-01 |
| Nb2O5 | 9.90E-01 |
| Nd2O3 | 9.90E-01 |
| NiO | 9.90E-01 |

| Table A-0-11 BV-HYDROSONIC-SCR Splits | |
|---|---|
| **Oxide Components** | **Fraction to Condensate** |
| NpO2 | 9.90E-01 |
| P2O5 | 9.90E-01 |
| PbO | 9.90E-01 |
| PdO | 9.90E-01 |
| Pr2O3 | 9.90E-01 |
| PuO2 | 9.90E-01 |
| Rb2O | 9.90E-01 |
| Re2O3 | 9.90E-01 |
| Rh2O3 | 9.90E-01 |
| Ru2O3 | 9.90E-01 |
| Sb2O3 | 9.90E-01 |
| SeO2 | 9.90E-01 |
| SiO2 | 9.90E-01 |
| Sm2O3 | 9.90E-01 |
| SnO2 | 9.90E-01 |
| SO3 | 9.90E-01 |
| SrO | 9.90E-01 |
| Ta2O5 | 9.90E-01 |
| Tc2O7 | 9.90E-01 |
| TeO2 | 9.90E-01 |
| ThO2 | 9.90E-01 |
| TiO2 | 9.90E-01 |
| Tl2O3 | 9.90E-01 |
| U3O8 | 9.90E-01 |
| V2O5 | 9.90E-01 |
| WO3 | 9.90E-01 |
| Y2O3 | 9.90E-01 |
| ZnO | 9.90E-01 |
| ZrO2 | 9.90E-01 |

# APPENDIX B. HTWOS VESSEL IDENTIFICATION AND PARAMETERS

Table B-0-1 East Area Vessel/Unit Operation Volumes and Identification

| Vessel/Unit Operation/ Model Identification | Maximum Volume (gal) | Heel Volume (gal) | Flowrate (gpm) | Equipment Class |
|---|---|---|---|---|
| East Area SST Tanks | | | | |
| BY-101 | 7.58E+05 | 100 | 140 | by-tank |
| BY-102 | 7.58E+05 | 100 | 140 | by-tank |
| BY-103 | 7.58E+05 | 100 | 140 | by-tank |
| BY-104 | 7.58E+05 | 100 | 140 | by-tank |
| BY-105 | 7.58E+05 | 100 | 140 | by-tank |
| BY-106 | 7.58E+05 | 100 | 140 | by-tank |
| BY-107 | 7.58E+05 | 100 | 140 | by-tank |
| BY-108 | 7.58E+05 | 100 | 140 | by-tank |
| BY-109 | 7.58E+05 | 100 | 140 | by-tank |
| BY-110 | 7.58E+05 | 100 | 140 | by-tank |
| BY-111 | 7.58E+05 | 100 | 140 | by-tank |
| BY-112 | 7.58E+05 | 100 | 140 | by-tank |
| BX-101 | 5.30E+05 | 100 | 140 | bx-tank |
| BX-102 | 5.30E+05 | 100 | 140 | bx-tank |
| BX-103 | 5.30E+05 | 100 | 140 | bx-tank |
| BX-104 | 5.30E+05 | 100 | 140 | bx-tank |
| BX-105 | 5.30E+05 | 100 | 140 | bx-tank |
| BX-106 | 5.30E+05 | 100 | 140 | bx-tank |
| BX-107 | 5.30E+05 | 100 | 140 | bx-tank |
| BX-108 | 5.30E+05 | 100 | 140 | bx-tank |
| BX-109 | 5.30E+05 | 100 | 140 | bx-tank |
| BX-110 | 5.30E+05 | 100 | 140 | bx-tank |
| BX-111 | 5.30E+05 | 100 | 140 | bx-tank |
| BX-112 | 5.30E+05 | 100 | 140 | bx-tank |
| B-101 | 5.30E+05 | 100 | 140 | b-tank |
| B-102 | 5.30E+05 | 100 | 140 | b-tank |
| B-103 | 5.30E+05 | 100 | 140 | b-tank |
| B-104 | 5.30E+05 | 100 | 140 | b-tank |
| B-105 | 5.30E+05 | 100 | 140 | b-tank |
| B-106 | 5.30E+05 | 100 | 140 | b-tank |
| B-107 | 5.30E+05 | 100 | 140 | b-tank |
| B-108 | 5.30E+05 | 100 | 140 | b-tank |
| B-109 | 5.30E+05 | 100 | 140 | b-tank |
| B-110 | 5.30E+05 | 100 | 140 | b-tank |
| B-111 | 5.30E+05 | 100 | 140 | b-tank |
| B-112 | 5.30E+05 | 100 | 140 | b-tank |

Table B-0-1 East Area Vessel/Unit Operation Volumes and Identification

| Vessel/Unit Operation/ Model Identification | Maximum Volume (gal) | Heel Volume (gal) | Flowrate (gpm) | Equipment Class |
|---|---|---|---|---|
| B-201 | 5.50E+04 | 100 | 140 | 200b-tank |
| B-202 | 5.50E+04 | 100 | 140 | 200b-tank |
| B-203 | 5.50E+04 | 100 | 140 | 200b-tank |
| B-204 | 5.50E+04 | 100 | 140 | 200b-tank |
| C-101 | 5.30E+05 | 100 | 140 | c-tank |
| C-102 | 5.30E+05 | 100 | 140 | c-tank |
| C-103 | 5.30E+05 | 100 | 140 | c-tank |
| C-104 | 5.30E+05 | 100 | 140 | c-tank |
| C-105 | 5.30E+05 | 100 | 140 | c-tank |
| C-106 | 5.30E+05 | 100 | 140 | c-tank |
| C-107 | 5.30E+05 | 100 | 140 | c-tank |
| C-108 | 5.30E+05 | 100 | 140 | c-tank |
| C-109 | 5.30E+05 | 100 | 140 | c-tank |
| C-110 | 5.30E+05 | 100 | 140 | c-tank |
| C-111 | 5.30E+05 | 100 | 140 | c-tank |
| C-112 | 5.30E+05 | 100 | 140 | c-tank |
| C-201 | 5.50E+04 | 100 | 140 | 200c-tank |
| C-202 | 5.50E+04 | 100 | 140 | 200c-tank |
| C-203 | 5.50E+04 | 100 | 140 | 200c-tank |
| C-204 | 5.50E+04 | 100 | 140 | 200c-tank |
| BA-101 | 1.50E+05 | 1000 | 140 | annex-b-by-bx |
| BA-102 | 1.50E+05 | 1000 | 140 | annex-b-by-bx |
| BA-103 | 1.50E+05 | 1000 | 140 | annex-b-by-bx |
| BA-104 | 1.50E+05 | 1000 | 140 | annex-b-by-bx |
| BA-105 | 1.50E+05 | 1000 | 140 | annex-b-by-bx |
| BA-106 | 1.50E+05 | 1000 | 140 | annex-b-by-bx |
| AX-101 | 1.00E+06 | 100 | 140 | ax-tank |
| AX-102 | 1.00E+06 | 100 | 140 | ax-tank |
| AX-103 | 1.00E+06 | 100 | 140 | ax-tank |
| AX-104 | 1.00E+06 | 100 | 140 | ax-tank |
| A-101 | 1.00E+06 | 100 | 140 | a-tank |
| A-102 | 1.00E+06 | 100 | 140 | a-tank |
| A-103 | 1.00E+06 | 100 | 140 | a-tank |
| A-104 | 1.00E+06 | 100 | 140 | a-tank |
| A-105 | 1.00E+06 | 100 | 140 | a-tank |
| A-106 | 1.00E+06 | 100 | 140 | a-tank |
| Easr Area DST | | | | |
| AN-101 | 1.14E+06 | 27500 | 140 | an-tank |
| AN-102 | 1.14E+06 | 27500 | 140 | an-tank |
| AN-103 | 1.14E+06 | 27500 | 140 | an-tank |
| AN-104 | 1.14E+06 | 27500 | 140 | an-tank |

Table B-0-1 East Area Vessel/Unit Operation Volumes and Identification

| Vessel/Unit Operation/ Model Identification | Maximum Volume (gal) | Heel Volume (gal) | Flowrate (gpm) | Equipment Class |
|---|---|---|---|---|
| AN-105 | 1.14E+06 | 27500 | 140 | an-tank |
| AN-106 | 1.14E+06 | 27500 | 140 | an-tank |
| AN-107 | 1.14E+06 | 27500 | 140 | an-tank |
| AP-101 | 1.14E+06 | 27500 | 140 | ap-tank |
| AP-102 | 1.14E+06 | 27500 | 140 | ap-tank |
| AP-103 | 1.14E+06 | 27500 | 140 | ap-tank |
| AP-104 | 1.14E+06 | 27500 | 140 | ap-tank |
| AP-105 | 1.14E+06 | 27500 | 140 | ap-tank |
| AP-106 | 1.14E+06 | 27500 | 140 | ap-tank |
| AP-107 | 1.14E+06 | 27500 | 140 | ap-tank |
| AY-101 | 1.00E+06 | 27500 | 140 | ay-tank |
| AY-102 | 1.00E+06 | 27500 | 140 | ay-tank |
| AZ-101 | 1.00E+06 | 27500 | 140 | az-tank |
| AZ-102 | 1.00E+06 | 27500 | 140 | az-tank |
| AW-101 | 1.14E+06 | 27500 | 140 | aw-tank |
| AW-102 | 1.13E+06 | 27500 | 140 | aw-tank |
| AW-103 | 1.14E+06 | 27500 | 140 | aw-tank |
| AW-104 | 1.14E+06 | 27500 | 140 | aw-tank |
| AW-105 | 1.14E+06 | 27500 | 140 | aw-tank |
| AW-106 | 1.14E+06 | 27500 | 140 | aw-tank |
| AW-107 | 1.14E+06 | 27500 | 140 | aw-tank |
| Miscellanous Tanks | | | | |
| 244-CR | 1.50E+04 | 100 | 140 | dcrt-tank |
| 244-BX | 1.50E+04 | 100 | 140 | dcrt-tank |
| AR-204 | 1.00E+06 | 100 | 140 | general-dst-tank |
| TK-244-BX | 1.00E+06 | 100 | 140 | general-dst-tank |
| 241-AZ-151 | 1.00E+06 | 100 | 140 | general-dst-tank |
| 241-ER-311 | 1.00E+06 | 100 | 140 | general-dst-tank |
| CATCH-TANK-A-350 | 1.00E+06 | 100 | 140 | general-dst-tank |
| LERF | 5.00E+09 | 100 | 140 | general-dst-tank |
| 11-MOLAR-NITRITE | 1.00E+09 | 100 | 140 | general-dst-tank |
| 11-MOLAR-CAUSTIC | 5.00E+07 | 100 | 140 | general-dst-tank |
| SODIUM-PERMANGANATE | 5.00E+06 | 100 | 140 | general-dst-tank |
| STRONTIUM-NITRATE | 5.00E+06 | 100 | 140 | general-dst-tank |
| OXALIC ACID | 4.00E+09 | 100 | 140 | general-dst-tank |
| WASH-CAUSTIC | 5.00E+07 | 100 | 140 | general-dst-tank |
| WASH-WATER | 4.00E+09 | 0 | 140 | general-dst-tank |
| WATER | 1.00E+10 | 0 | 140 | general-dst-tank |
| 8-MOLAR-CAUSTIC | 1.00E+10 | 100 | 140 | general-dst-tank |
| OUT-OF-TANK-2 | 1.60E+05 | 100 | 140 | out-of-tank-wash- |

Table B-0-1 East Area Vessel/Unit Operation Volumes and Identification

| Vessel/Unit Operation/ Model Identification | Maximum Volume (gal) | Heel Volume (gal) | Flowrate (gpm) | Equipment Class |
|---|---|---|---|---|
| | | | | tank |
| SPARE DSTs | | | | |
| MAI-RECEIPT-EAST | 1.14E+06 | 0 | 140 | spare-dst |
| SPARE-101 | 1.00E+06 | 100 | 140 | spare-dst |
| SPARE-102 | 1.14E+06 | 100 | 140 | spare-dst |
| SPARE-103 | 1.14E+06 | 0 | 140 | spare-dst |
| SPARE-104 | 1.14E+06 | 100 | 140 | spare-dst |
| SPARE-105 | 1.14E+06 | 100 | 140 | spare-dst |
| SPARE-106 | 1.14E+07 | 100 | 140 | spare-dst |
| 242-A Evaporator | | | | |
| 242-A | NA | NA | 140 Max. Boil-Off | evaporator-wvp |
| 242-A-STACK | 70 oF | 14.7 psi | NA | stack |

| Table B-0-2 West Area Vessel/Unit Operation Volumes and Identification | | | | |
|---|---|---|---|---|
| Vessel/Unit Operation Model Identification | Maximum Volume (gal) | Heel Volume (gal) | Flowrate (gpm) | Equipment Class |
| West Area SST | | | | |
| TX-101 | 7.58E+05 | 100 | 140 | tx-tank |
| TX-102 | 7.58E+05 | 100 | 140 | tx-tank |
| TX-103 | 7.58E+05 | 100 | 140 | tx-tank |
| TX-104 | 7.58E+05 | 100 | 140 | tx-tank |
| TX-105 | 7.58E+05 | 100 | 140 | tx-tank |
| TX-106 | 7.58E+05 | 100 | 140 | tx-tank |
| TX-107 | 7.58E+05 | 100 | 140 | tx-tank |
| TX-108 | 7.58E+05 | 100 | 140 | tx-tank |
| TX-109 | 7.58E+05 | 100 | 140 | tx-tank |
| TX-110 | 7.58E+05 | 100 | 140 | tx-tank |
| TX-111 | 7.58E+05 | 100 | 140 | tx-tank |
| TX-112 | 7.58E+05 | 100 | 140 | tx-tank |
| TX-113 | 7.58E+05 | 100 | 140 | tx-tank |
| TX-114 | 7.58E+05 | 100 | 140 | tx-tank |
| TX-115 | 7.58E+05 | 100 | 140 | tx-tank |
| TX-116 | 7.58E+05 | 100 | 140 | tx-tank |
| TX-117 | 7.58E+05 | 100 | 140 | tx-tank |
| TX-118 | 7.58E+05 | 100 | 140 | tx-tank |
| TA-1 | 1.50E+06 | 1000 | 140 | annex-t-tx-ty |
| TA-2 | 1.50E+06 | 1000 | 140 | annex-t-tx-ty |
| TA-3 | 1.50E+06 | 1000 | 140 | annex-t-tx-ty |
| TA-4 | 1.50E+06 | 1000 | 140 | annex-t-tx-ty |
| TA-5 | 1.50E+06 | 1000 | 140 | annex-t-tx-ty |
| TA-6 | 1.50E+06 | 1000 | 140 | annex-t-tx-ty |
| TY-101 | 7.58E+05 | 100 | 140 | ty-tank |
| TY-102 | 7.58E+05 | 100 | 140 | ty-tank |
| TY-103 | 7.58E+05 | 100 | 140 | ty-tank |
| TY-104 | 7.58E+05 | 100 | 140 | ty-tank |
| TY-105 | 7.58E+05 | 100 | 140 | ty-tank |
| TY-106 | 7.58E+05 | 100 | 140 | ty-tank |
| T-201 | 5.50E+04 | 100 | 140 | 200t-tank |
| T-202 | 5.50E+04 | 100 | 140 | 200t-tank |
| T-203 | 5.50E+04 | 100 | 140 | 200t-tank |
| T-204 | 5.50E+04 | 100 | 140 | 200t-tank |
| T-101 | 5.30E+05 | 100 | 140 | t-tank |
| T-102 | 5.30E+05 | 100 | 140 | t-tank |
| T-103 | 5.30E+05 | 100 | 140 | t-tank |
| T-104 | 5.30E+05 | 100 | 140 | t-tank |

Table B-0-2 West Area Vessel/Unit Operation Volumes and Identification

| Vessel/Unit Operation Model Identification | Maximum Volume (gal) | Heel Volume (gal) | Flowrate (gpm) | Equipment Class |
|---|---|---|---|---|
| T-105 | 5.30E+05 | 100 | 140 | t-tank |
| T-106 | 5.30E+05 | 100 | 140 | t-tank |
| T-107 | 5.30E+05 | 100 | 140 | t-tank |
| T-108 | 5.30E+05 | 100 | 140 | t-tank |
| T-109 | 5.30E+05 | 100 | 140 | t-tank |
| T-110 | 5.30E+05 | 100 | 140 | t-tank |
| T-111 | 5.30E+05 | 100 | 140 | t-tank |
| T-112 | 5.30E+05 | 100 | 140 | t-tank |
| U-201 | 5.50E+04 | 100 | 140 | 200u-tank |
| U-202 | 5.50E+04 | 100 | 140 | 200u-tank |
| U-203 | 5.50E+04 | 100 | 140 | 200u-tank |
| U-204 | 5.50E+04 | 100 | 140 | 200u-tank |
| U-101 | 5.30E+05 | 100 | 140 | u-tank |
| U-102 | 5.30E+05 | 100 | 140 | u-tank |
| U-103 | 5.30E+05 | 100 | 140 | u-tank |
| U-104 | 5.30E+05 | 100 | 140 | u-tank |
| U-105 | 5.30E+05 | 100 | 140 | u-tank |
| U-106 | 5.30E+05 | 100 | 140 | u-tank |
| U-107 | 5.30E+05 | 100 | 140 | u-tank |
| U-108 | 5.30E+05 | 100 | 140 | u-tank |
| U-109 | 5.30E+05 | 100 | 140 | u-tank |
| U-110 | 5.30E+05 | 100 | 140 | u-tank |
| U-111 | 5.30E+05 | 100 | 140 | u-tank |
| U-112 | 5.30E+05 | 100 | 140 | u-tank |
| UA-1 | 1.50E+05 | 1000 | 140 | annex-s-sx-u |
| UA-2 | 1.50E+05 | 1000 | 140 | annex-s-sx-u |
| S-101 | 7.58E+05 | 100 | 140 | s-tank |
| S-102 | 7.58E+05 | 100 | 140 | s-tank |
| S-103 | 7.58E+05 | 100 | 140 | s-tank |
| S-104 | 7.58E+05 | 100 | 140 | s-tank |
| S-105 | 7.58E+05 | 100 | 140 | s-tank |
| S-106 | 7.58E+05 | 100 | 140 | s-tank |
| S-107 | 7.58E+05 | 100 | 140 | s-tank |
| S-108 | 7.58E+05 | 100 | 140 | s-tank |
| S-109 | 7.58E+05 | 100 | 140 | s-tank |
| S-110 | 7.58E+05 | 100 | 140 | s-tank |
| S-111 | 7.58E+05 | 100 | 140 | s-tank |
| S-112 | 7.58E+05 | 100 | 140 | s-tank |
| SX-101 | 1.00E+06 | 100 | 140 | sx-tank |
| SX-102 | 1.00E+06 | 100 | 140 | sx-tank |
| SX-103 | 1.00E+06 | 100 | 140 | sx-tank |

Table B-0-2 West Area Vessel/Unit Operation Volumes and Identification

| Vessel/Unit Operation Model Identification | Maximum Volume (gal) | Heel Volume (gal) | Flowrate (gpm) | Equipment Class |
|---|---|---|---|---|
| SX-104 | 1.00E+06 | 100 | 140 | sx-tank |
| SX-105 | 1.00E+06 | 100 | 140 | sx-tank |
| SX-106 | 1.00E+06 | 100 | 140 | sx-tank |
| SX-107 | 1.00E+06 | 100 | 140 | sx-tank |
| SX-108 | 1.00E+06 | 100 | 140 | sx-tank |
| SX-109 | 1.00E+06 | 100 | 140 | sx-tank |
| SX-110 | 1.00E+06 | 100 | 140 | sx-tank |
| SX-111 | 1.00E+06 | 100 | 140 | sx-tank |
| SX-112 | 1.00E+06 | 100 | 140 | sx-tank |
| SX-113 | 1.00E+06 | 100 | 140 | sx-tank |
| SX-114 | 1.00E+06 | 100 | 140 | sx-tank |
| SX-115 | 1.00E+06 | 100 | 140 | sx-tank |
| West Area DST | | | | |
| SY-101 | 1.14E+06 | 27500 | 140 | sy-tank |
| SY-102 | 1.14E+06 | 27500 | 140 | sy-tank |
| SY-103 | 1.14E+06 | 27500 | 140 | sy-tank |
| Miscellaneous West Area Tanks | | | | |
| 244-TX | 1.50E+04 | 100 | 140 | dcrt-tanks |
| 244-U | 1.50E+05 | 100 | 140 | dcrt-tanks |
| 244-S | 1.50E+05 | 100 | 140 | dcrt-tanks |
| EARLY-LAW-TREATMENT | 2.50E+06 | 0 | 140 | spare-dst |
| SUP-SLUDGE-WEST | 1.14E+08 | 0 | 140 | spare-dst |
| MAI-RECEIPT | 1.14E+08 | 0 | 140 | spare-dst |

**Table B-0-3 WTP and Supplemental Treatment Equipment Volumes and Identification**

| EQUIPMENT | Description | Maximum Volume (gal) | Set Volume (gal) | Minimum Volume (gal) | Flowrate (gpm) | Equipment Class |
|---|---|---|---|---|---|---|
| | | Units are as above unless otherwise noted | | | | |
| **PRETREATMENT** | | | | | | |
| HTWOS-LAW-FEED | LAW Feed Receipt | 3.0E+06 | 7.5E+02 | 2.0E+02 | 70 | mixer |
| HTWOS-HLW-FEED | HLW Feed Receipt | 3.0E+06 | 0.0E+00 | 2.0E+02 | 50 | mixer |
| HTWOS-V11002 | Feed Evaporator | 75 gpm (Max. Feed Rate) | 5 M Na endpoint | 1.25 SpG of bottoms | 56 gpm Max. boil-off | split-evaporator |
| HTWOS-V41001-CONDENSER | Waste feed evaporator condenser | 3.0E+03 | 9.0E+02 | 5.0E+01 | 80 | evaporator-condenser-tank |
| HTWOS-V12010 | Waste feed evaporator bottoms collection | 5.8E+04 | 4.5E+04 | 3.3E+03 | 70.4 | mixer-6-outputs |
| HTWOS-V1002-CONDENSER-AIR | Air add to condenser | NA | 77 $^{o}$F/14.7 psi | NA | 520 ft 3/min | liquid-gas-chem-add |
| HTWOS-V12011A | Ultrafilters | 2.7E+04 | 1.8E+04 | 1.6E+04 | 16.38 | mixer-6-outputs |
| HTWOS-V12011B | Ultrafilters | 2.7E+04 | 1.8E+04 | 1.6E+04 | 16.38 | mixer-6-outputs |
| NEW-HTWOS-V12015A | Permeate Collection | 2.7E+04 | 2.3E+04 | 1.7E+03 | 70 | mixer-6-outputs |
| NEW-HTWOS-V12015B | Permeate Collection | 2.7E+04 | 2.3E+04 | 1.7E+03 | 70 | mixer-6-outputs |
| CX-FEED-TANK | Cs IX Tank | 5.9E+04 | 3.0E+03 | 0.0E+00 | 21.294 | mixer |
| HTWOS-SPENT-RESIN | Spent Resin Collection Vessel | 1.0E+05 | 1.0E+05 | 0.0E+00 | 0 | mixer |
| HTWOS-CS-IX | Cs-Ion Exchange Columns | NA | NA | NA | NA | f-split-3 |
| HTWOS-V43110 | Treated LAW Collection Vessel | 9.3E+04 | 7.0E+03 | 1.0E+03 | 75 | mixer-6-outputs |
| HTWOS-V41011 | Treated LAW Evaporator Unit | 75 gpm (Max. Feed Rate) | 8 M Na endpoint | 1.4 SpG of bottoms | 100 gpm Max. boil-off | split-evaporator |
| HTWOS-V411011-CONDENSER | Treated LAW Evaporator Condenser | 7.0E+03 | 3.0E+03 | 5.0E+01 | 100 | evaporator-condenser-tank |
| **PT-550** | | | | | | |
| HTWOS-V15013 | Acidic/Alkaline Effluent Vessel | 1.0E+05 | 5.0E+04 | 4.0E+03 | 88 | mixer-6-outputs |
| HTWOS-V15018 | Acidic/Alkaline Effluent Vessel | 1.0E+05 | 5.0E+04 | 4.0E+03 | 88 | mixer-6-outputs |

**Table B-0-3 WTP and Supplemental Treatment Equipment Volumes and Identification**

| EQUIPMENT | Description | Maximum Volume (gal) | Set Volume (gal) | Minimum Volume (gal) | Flowrate (gpm) | Equipment Class |
|---|---|---|---|---|---|---|
| | | Units are as above unless otherwise noted | | | | |
| HTWOS-V35002 | SBS Effluent Vessel | 1.2E+04 | 5.6E+03 | 9.0E+02 | 48 | mixer |
| HTWOS-V15009 | SBS Effluent-Chem Add Vessel | 1.0E+04 | 5.6E+03 | 9.0E+02 | 88 | mixer-6-outputs |
| **LAW MELTER** | | | | | | |
| HTWOS-V21001 | LAW Concentrate Receipt Vessel | 1.1E+05 | 5.0E+04 | 1.5E+03 | 88 | mixer |
| HTWOS-V21101 | LAW Melter Feed Preparation Vessel | 2.5E+04 | 8.0E+03 | 0.0E+00 | 88 | mixer-oxide-glass-formers |
| HTWOS-T21101 | LAW Melter Glass Former Feed Hopper | 4.0E+03 | 4.0E+03 | 0.0E+00 | 1.0E+05 | feed-hopper |
| HTWOS-V21201 | LAW Melter Feed Vessel | 2.5E+04 | 1.0E+04 | 3.4E+02 | 0.45 | mixer-oxide-glass-formers |
| HTWOS-LAW-MELTER-1 | LAW Melter | 7.2E+03 | 6.9E+03 | 6.6E+03 | 250 | glass-melter |
| FAILED-LAW-MELTERS | Capacity for replaced melters (accumulator) | 3.0E+08 | 1.0E+08 | 0.0E+00 | 0 | mixer-oxide-glass-formers |
| HTWOS-LAW-CANISTERS | Capacity for final product (accumulator) | 3.0E+08 | 1.0E+08 | 0.0E+00 | 0 | mixer-oxide-glass-formers |
| LAW-MELTER-NEURAL-NET-DESTINATION | Virtual vessel for estimating glass production based on feed. | NA | NA | NA | Na | mixer |
| HTWOS-LAW MELTER-AIR | LAW melter air input from bubblers and inleakage | 250 ft3/min (Max) | 77 $^{o}$F | 14,7 psi | NA | liquid-gas-chem-add |
| **HLW MELTER** | | | | | | |
| HTWOS-V12007 | HLW Feed Blend Vessel | 1.0E+05 | 8.1E+04 | 1.0E+00 | 44 | mixer |
| HTWOS-T31101 | HLW Melter Glass Former Feed Hopper | 4.0E+03 | 4.0E+03 | 0.0E+00 | 5000 | feed-hopper |
| HTWOS-V31101 | HLW Melter Feed Preparation Vessel | 1.5E+04 | 8.0E+03 | 0.0E+00 | 44 | mixer-oxide-glass-formers |
| HTWOS-V31102 | HLW Melter Feed Vessel | 1.4E+04 | 1.0E+04 | 3.4E+02 | 0.25 | mixer-oxide-glass-formers |
| HTWOS-HLW-MELTER | HLW Melter | 1.9E+03 | 1.8E+03 | 1.8E+03 | 250 | glass-melter |

**Table B-0-3 WTP and Supplemental Treatment Equipment Volumes and Identification**

| EQUIPMENT | Description | Maximum Volume (gal) | Set Volume (gal) | Minimum Volume (gal) | Flowrate (gpm) | Equipment Class |
|---|---|---|---|---|---|---|
| | | Units are as above unless otherwise noted | | | | |
| FAILED-HLW-MELTERS | Capacity for replaced melters (accumulator) | 3.0E+08 | 2.0E+03 | 0.0E+00 | 0 | mixer-oxide-glass-formers |
| HTWOS-HLW-CANISTERS | Capacity for final product (accumulator) | 3.0E+08 | 2.0E+03 | 0.0E+00 | 0 | mixer-oxide-glass-formers |
| HLW-MELTER-NEURAL-NET-DESTINATION | Virtual vessel for estimating glass production based on feed. | Na | Na | Na | Na | mixer |
| HTWOS-HLW MELTER-AIR | HLW melter air input from inleakage | 250 ft3/min (Max) | 77 $^{o}$F | 14,7 psi | NA | liquid-gas-chem-add |
| **LAW OFFGAS** | | | | | | |
| HTWOS-LAW-SBS | LAW Submerged Bed Scrubber | 8.4E+03 | 7.9E+03 | 5.0E+02 | NA | sbs-scrubber |
| HTWOS-LAW-SBS-CONDENSATE-VESSEL | LAW SBS Condensate Vessel | 1.7E+04 | 1.6E+04 | 7.5E+03 | NA | sbs-condensate-recycle |
| HTWOS-LAW-WESP | Wet-electrostatic precipitator | NA | NA | NA | NA | liquid-scrubber |
| LAG STORAGE | WESP Drains Collection Vessel | 2.5E+04 | 1.0E+03 | 2.5E+02 | 10 | mixer |
| HTWOS-V45009 | Neutralization Vessel | 3.0E+06 | 2.5E+03 | 1.0E+03 | 7.5 | mixer |
| LAW-HEPA1 and LAW-HEPA2 | Two stages of HEPA filtration | NA | NA | NA | NA | accumulation-scrubber |
| LAW-VOC-SCRUB | Volatile organic carbon (VOC) scrubber | NA | NA | NA | NA | accumulation-scrubber |
| LAW-NOX-SCRUB | NOx scrubber | NA | NA | NA | NA | accumulation-scrubber |
| HTWOS-LAW-CAUSTIC-SCRUBBER | Caustic Scrubber | NA | NA | NA | NA | liquid-scrubber |
| HTWOS-LAW-OFFGAS-STACK | Stack | NA | NA | NA | NA | stack |
| HTWOS-SBS-CHEM-ADD | Process chemical addition | NA | NA | NA | NA | chem.-add |
| HTWOS-LAW-WESP-CHEM-ADD | Process chemical addition | NA | NA | NA | NA | chem.-add |
| HTWOS-V45009-CHEM-ADD | Process chemical addition | NA | NA | NA | NA | chem.-add |
| **HLW OFFGAS** | | | | | | |

**Table B-0-3 WTP and Supplemental Treatment Equipment Volumes and Identification**

| EQUIPMENT | Description | Maximum Volume (gal) | Set Volume (gal) | Minimum Volume (gal) | Flowrate (gpm) | Equipment Class |
|---|---|---|---|---|---|---|
| | | Units are as above unless otherwise noted | | | | |
| HTWOS-LAW-SBS | HLW Submerged Bed Scrubber | 3.2E+03 | 2.3E+03 | 5.0E+02 | 122 $^{o}$F /13.1 psi | sbs-scrubber |
| HTWOS-LAW-SBS-CONDENSATE-VESSEL | HLW SBS Condensate Vessel | 6.2E+03 | 5.9E+03 | 2.5E+03 | NA | sbs-condensate-recycle |
| HTWOS-HLW-WESP | Wet-electrostatic precipitator | NA | 115 $^{o}$F /12.98 psi | NA | NA | liquid-scrubber |
| HTWOS-HLW-HEME | HLW HEME | NA | 112 $^{o}$F /12.79 psi | NA | NA | liquid-scrubber |
| HLW-HEPA1 and LAW-HEPA2 | Two stages of HEPA filtration | NA | 158 $^{o}$F/12.79psi | NA | NA | accumulation-scrubber |
| HLW-VOC-SCRUB | Volatile organic carbon (VOC) scrubber | NA | 498 $^{o}$F /14.7psi | NA | NA | accumulation-scrubber |
| HLW-AG-MORDENITE-COL | Silver-Mordenite Column | NA | 358 $^{o}$F /14.7psi | NA | NA | accumulation-scrubber |
| HTWOS-HLW-NOX-SCRUB | NOx Scrubber | NA | 498 $^{o}$F /14.7psi | NA | NA | accumulation-scrubber |
| HTWOS-LAW-OFFGAS-STACK | Stack | NA | 77 $^{o}$F /14.7psi | NA | NA | stack |
| HTWOS-HLW-NOX-NH3 | Amonia addition | NA | 77 $^{o}$F /14.7 psi | NA | 2.243 ft3/min | liquid-gas-chem-add |
| HTWOS-SBS-1-WATER | Process chemical addition | NA | NA | NA | 30 | chem.-add |
| HTWOS-LAW-WESP-LIQUID | Process chemical addition | NA | NA | NA | 0.8 | chem.-add |
| HTWOS-HEME-WATER | Process chemical addition | NA | NA | NA | 0.1 | chem.-add |
| **SUPPLEMENTAL TRU SLUDGE PROCESSING** | | | | | | |
| HTWOS-SUP-TRU-INTERFACE | Provides feed from the feed list | 1.0E+06 | 5.0E+02 | 1.0E+01 | 0 | mixer |
| SUP-TRU-FEED1 | Simulates the feed receipt tank | 8.0E+03 | 7.2E+03 | 1.0E+02 | 4 | mixer |
| SUP-TRU-FEED2 | Simulates the feed receipt tank | 8.0E+03 | 7.2E+03 | 1.0E+02 | 4 | mixer |
| SUP-TRU-FEED3 | Simulates the feed receipt tank | 8.0E+03 | 7.2E+03 | 1.0E+02 | 4 | mixer |
| SUP-TRU-FEED4 | Simulates the feed receipt tank | 8.0E+03 | 7.2E+03 | 1.0E+02 | 4 | mixer |

**Table B-0-3 WTP and Supplemental Treatment Equipment Volumes and Identification**

| EQUIPMENT | Description | Maximum Volume (gal) | Set Volume (gal) | Minimum Volume (gal) | Flowrate (gpm) | Equipment Class |
|---|---|---|---|---|---|---|
| | | Units are as above unless otherwise noted | | | | |
| SUP-TRU-FEED5 | Simulates the feed receipt tank | 8.0E+03 | 7.2E+03 | 1.0E+02 | 4 | mixer |
| SUPP-TRU-DRYER-CONDENSER | Condenser off of Dryer | 7.0E+03 | 3.0E+03 | 5.0E+01 | 100 | evaporator-condenser-tank |
| SUP-TRU-DRYER | Dryer unit. | | | | | split-evaporator |
| SUPP-TRU-DRYER-AIR | Air to condenser | NA | 77 $^{o}$F /14.7 psi | NA | 300 ft3/min | |
| CONTACT-SUPP-TRU-PACKAGES | Accumulates and Sums the CH-TRU drums | 1.0E+10 | 0.0E+00 | 0.0E+00 | 0 | mixer-oxide-glass-formers |
| REMOTE-SUPP-TRU-PACKAGES | Accumulates and Sums the RH-TRU canisters | 1.0E+10 | 0.0E+00 | 0.0E+00 | 0 | mixer-oxide-glass-formers |
| **WEST CS IX SUPPLEMENTAL TREATMENT** | | | | | | |
| WEST-TF-IX-FEED-TANK | Feed Tank to West Area Cs-IX | 7.5E+04 | 5.0E+04 | 2.3E+03 | 11.359 | mixer-6-outputs |
| WEST-CS-IX1 | Cs-IX Column | 340.782 cv | 180 cv loading | NA | NA | ix-column |
| WEST-CS-IX2 | Cs-IX Column | 340.782 cv | 180 cv loading | NA | NA | ix-column |
| WEST-EFFLUENT-COLLECTION-TANK | Cs-IX Effluent Collection to SY-102 | 1.0E+05 | 5.0E+04 | 5.0E+02 | 75 | mixer-6-outputs |
| EFFLUENT-COLLECTION-CAUSTIC | pH adjustment | NA | NA | NA | 25 | chem-add |
| FEED1-TO-WEST-BV | Feed to West Area BV | 4.7E+04 | 4.1E+04 | 0.0E+00 | 50 | mixer |
| FEED2-TO-WEST-BV | Feed to West Area BV | 4.7E+04 | 4.1E+04 | 0.0E+00 | 50 | mixer |
| WEST-SUPP-TREATMENT-SPENT-RESIN | Spent Resin Collection Tank | 1.0E+04 | 7.5E+03 | 0.0E+00 | 5 | mixer |
| **WESTAREA SUPPLEMENTAL TREATMENT (BV)** | | | | | | |
| WEST-BV-FEED-TANK | BV Feed Tank | 1.6E+05 | 1.0E+04 | 2.5E+02 | 2 | mixer |
| WEST-BV-NEURAL-NET-DESTINATION | Virtual vessel to predict glass product from feed | 1.0E+10 | 0.0E+00 | 0.0E+00 | 0 | mixer |
| WEST-BV-DRYER | BV dryer | | | | | split-evaporator |

**Table B-0-3 WTP and Supplemental Treatment Equipment Volumes and Identification**

| EQUIPMENT | Description | Maximum Volume (gal) | Set Volume (gal) | Minimum Volume (gal) | Flowrate (gpm) | Equipment Class |
|---|---|---|---|---|---|---|
| | | Units are as above unless otherwise noted | | | | |
| WEST-BV-DRYER-CONDENSER | BV Condenser | 7.0E+03 | 3.0E+03 | 5.0E+01 | 100 | evaporator-condenser-tank |
| WEST-BV-DRYER-AIR | BV air to condenser | NA | 70 $^{o}$F 14.7 psi | NA | 232.2 ft3/min | liquid-gas-chem-add |
| WEST-BV-LID-SPLITTER | 99-Tc, Cr(OH)4-, Cr(total) split representing lid accumulation | NA | NA | NA | NA | f-split-2 |
| WEST-BV-LID-ACCUMULATION | accumulation of lid dust | 1.0E+08 | 0.0E+00 | 0.0E+00 | 0 | mixer-oxide-glass-formers |
| WEST-BV-MELTER-DUST | split some dust for recycle | NA | 0.684% to filter | NA | NA | p-split-2-all-phases |
| WEST-SINTERED-METAL-FILTER | Filter Dust to recycle | NA | 99.97% removed | NA | NA | solid-gas-seperator |
| WEST-BV-MELTER-DUST-SHIFT | changes phase of 3-H, H2O, NH3, and NH4 to gas | NA | 100% shift | NA | NA | phase-shifter |
| WEST-BV-MELTER-PHASE-SHIFT | changes 129-I, 14-C, 3-H, Hg-2+ to gas | NA | 100% shift | NA | NA | phase-shifter |
| WEST-BV-MELTER | Melter | 4.8E+03 | 1.0E+03 | 0.0E+00 | 250 | glass-melter |
| WEST-BV-PRODUCT | BV Product Accumulation | 1.0E+08 | 0.0E+00 | 0.0E+00 | 0 | mixer-oxide-glass-formers |
| WEST-HG-PHASE-SHIFTER | changes phase of Hg2+ from gas to solid | NA | 100% shift | NA | NA | phase-shifter |
| WEST-BV-HYDROSONIC-SCR | Condensed water in melter of-gas | NA | 66.2 $^{o}$F /12.05 psi | NA | NA | liquid-scrubber |
| WEST-BV-SCR-DILUTION-WATER | Water to scrubber | NA | NA | NA | 5 | chem-add |
| WEST-BV-SCR-DILUTION-AIR | Air to scrubber | NA | NA | NA | 4497.55 ft3/min | liquid-gas-chem-add |
| WEST-BV-SCR-CHEM-ADD | NaOH addition to have 0.1 M excess OH | NA | NA | NA | 2 | chem-add |

**Table B-0-3 WTP and Supplemental Treatment Equipment Volumes and Identification**

| EQUIPMENT | Description | Maximum Volume (gal) | Set Volume (gal) | Minimum Volume (gal) | Flowrate (gpm) | Equipment Class |
|---|---|---|---|---|---|---|
| | | Units are as above unless otherwise noted | | | | |
| WEST-BV-HEPA | HEPA Filter (99.97% removal) | NA | 70 $^{o}$F /14.7 psi | NA | NA | accumulation-scrubber-uniform-split |
| WEST-BV-CARBON-FILTER | Carbon Filter (99% of 129-I removed) | NA | 498 $^{o}$F /14.7 psi | NA | NA | accumulation-scrubber |
| WEST-BV-NOX-SCR | NOX Scrubber | NA | 600 $^{o}$F /12.79 psi | NA | NA | gas-scrubber |
| WEST-BV-NOX-SCR-DILUTION-AIR | Air add to SCR | NA | 77 $^{o}$F /14.7 | NA | 0 | liquid-gas-chem-add |
| WEST-BV-NH3-GAS-CHEM-ADD | NH3 addition | NA | 77 $^{o}$F /14.7 | NA | 0 | liquid-gas-chem-add |
| WEST-BV-STACK | BV Stack | NA | 77 $^{o}$F /14.7 | NA | NA | Stack |
| **WEST AREA DEMO SUPPLEMENTAL TREATMENT** | | | | | | |
| WD-BV-FEED-TANK | BV Feed Tank | 1.6E+05 | 1.0E+04 | 2.5E+02 | 2 | mixer |
| WD-BV-NEURAL-NET-DESTINATION | Virtual vessel to predict glass product from feed | 1.0E+10 | 0.0E+00 | 0.0E+00 | 0 | mixer |
| WD-BV-DRYER | BV dryer | | | | | split-evaporator |
| WD-BV-DRYER-CONDENSER | BV Condenser | 7.0E+03 | 3.0E+03 | 5.0E+01 | 100 | evaporator-condenser-tank |
| WD-BV-DRYER-AIR | BV air to condenser | NA | 70 $^{o}$F /14.7 psi | NA | 232.2 ft3/min | liquid-gas-chem-add |
| WD-BV-LID-SPLITTER | 99-Tc, Cr(OH)4-, Cr(total) split representing lid accumulation | NA | NA | NA | NA | f-split-2 |
| WD-BV-LID-ACCUMULATION | accumulation of lid dust | 1.0E+08 | 0.0E+00 | 0.0E+00 | 0 | mixer-oxide-glass-formers |
| WD-BV-MELTER-DUST | split some dust for recycle | NA | 0.684% to filter | NA | NA | p-split-2-all-phases |
| WD-SINTERED-METAL-FILTER | Filter Dust to recycle | NA | 99.97% removed | NA | NA | solid-gas-seperator |

**Table B-0-3 WTP and Supplemental Treatment Equipment Volumes and Identification**

| EQUIPMENT | Description | Maximum Volume (gal) | Set Volume (gal) | Minimum Volume (gal) | Flowrate (gpm) | Equipment Class |
|---|---|---|---|---|---|---|
| | | Units are as above unless otherwise noted | | | | |
| WD-BV-MELTER-DUST-SHIFT | changes phase of 3-H, H2O, NH3, and NH4 to gas | NA | 100% shift | NA | NA | phase-shifter |
| WD-BV-MELTER-PHASE-SHIFT | changes 129-I, 14-C, 3-H, Hg-2+ to gas | NA | 100% shift | NA | NA | phase-shifter |
| WD-BV-MELTER | Melter | 4.8E+03 | 1.0E+03 | 0.0E+00 | 250 | glass-melter |
| WD-BV-PRODUCT | BV Product Accumulation | 1.0E+08 | 0.0E+00 | 0.0E+00 | 0 | mixer-oxide-glass-formers |
| WD-HG-PHASE-SHIFTER | changes phase of Hg2+ from gas to solid | NA | 100% shift | NA | NA | phase-shifter |
| WD-BV-HYDROSONIC-SCR | Condensed water in melter of-gas | NA | 66.2 $^{o}$F /12.05 psi | NA | NA | liquid-scrubber |
| WD-BV-SCR-DILUTION-WATER | Water to scrubber | NA | NA | NA | 5 | chem-add |
| WD-BV-SCR-DILUTION-AIR | Air to scrubber | NA | NA | NA | 4497.55 ft3/min | liquid-gas-chem-add |
| WD-BV-SCR-CHEM-ADD | NaOH addition to have 0.1 M excess OH | NA | NA | NA | 2 | chem-add |
| WD-BV-HEPA | HEPA Filter (99.97% removal) | NA | 70 $^{o}$F /14.7 psi | NA | NA | accumulation-scrubber-uniform-split |
| WD-BV-CARBON-FILTER | Carbon Filter (99% of 129-I removed) | NA | 498 $^{o}$F /14.7 psi | NA | NA | accumulation-scrubber |
| WD-BV-NOX-SCR | NOX Scrubber | NA | 600 $^{o}$F /12.79 psi | NA | NA | gas-scrubber |
| WD-BV-NOX-SCR-DILUTION-AIR | Air add to SCR | NA | 77 $^{o}$F /14.7 | NA | 0 | liquid-gas-chem-add |
| WD-BV-NH3-GAS-CHEM-ADD | NH3 addition | NA | 77 $^{o}$F /14.7 | NA | 0 | liquid-gas-chem-add |
| WD-BV-STACK | BV Stack | NA | 77 $^{o}$F /14.7 | NA | NA | Stack |
| **EAST CS IX SUPPLEMENTAL TREATMENT** | | | | | | |
| EAST-TF-IX-FEED-TANK | Feed Tank to Eastt Area Cs-IX | 7.5E+04 | 5.0E+04 | 2.3E+03 | 11.359 | mixer-6-outputs |

**Table B-0-3 WTP and Supplemental Treatment Equipment Volumes and Identification**

| EQUIPMENT | Description | Maximum Volume (gal) | Set Volume (gal) | Minimum Volume (gal) | Flowrate (gpm) | Equipment Class |
|---|---|---|---|---|---|---|
| | | Units are as above unless otherwise noted | | | | |
| EAST-CS-IX1 | Cs-IX Column | 340.782 cv | 180 cv loading | NA | NA | ix-column |
| EAST-CS-IX2 | Cs-IX Column | 340.782 cv | 180 cv loading | NA | NA | ix-column |
| EAST-EFFLUENT-COLLECTION-TANK | Cs-IX Effluent Collection to SY-102 | 1.0E+05 | 5.0E+04 | 5.0E+02 | 75 | mixer-6-outputs |
| EFFLUENT-COLLECTION-CAUSTIC | pH adjustment | NA | NA | NA | 25 | chem-add |
| FEED1-TO-EAST-BV | Feed to East Area BV | 4.7E+04 | 4.1E+04 | 0.0E+00 | 50 | mixer |
| FEED2-TO-EAST-BV | Feed to East Area BV | 4.7E+04 | 4.1E+04 | 0.0E+00 | 50 | mixer |
| EAST-SUPP-TREATMENT-SPENT-RESIN | Spent Resin Collection Tank | 1.0E+04 | 7.5E+03 | 0.0E+00 | 5 | mixer |
| **EASTAREA SUPPLEMENTAL TREATMENT (BV)** | | | | | | |
| TF-EAST-BV-FEED | virtual tank to set feed priorities | 1.0E+05 | 5.0E+03 | 0.0E+00 | 75 | mixer |
| WTP-EAST-BV-FEED | virtual tank to set feed priorities | 8.0E+04 | 5.0E+03 | 0.0E+00 | 75 | mixer |
| EAST-CS-IX-BV-FEED | virtual tank to set feed priorities | 8.0E+04 | 5.0E+03 | 0.0E+00 | 75 | mixer |
| EAST-BV-FEED-TANK | BV Feed Tank | 1.6E+05 | 1.0E+04 | 2.5E+02 | 2 | mixer |
| EAST-BV-NEURAL-NET-DESTINATION | Virtual vessel to predict glass product from feed | 1.0E+10 | 0.0E+00 | 0.0E+00 | 0 | mixer |
| EAST-BV-DRYER | BV dryer | | | | | split-evaporator |
| EAST-BV-DRYER-CONDENSER | BV Condenser | 7.0E+03 | 3.0E+03 | 5.0E+01 | 100 | evaporator-condenser-tank |
| EAST-BV-DRYER-AIR | BV air to condenser | NA | 70 $^{o}$F /14.7 psi | NA | 232.2 ft3/min | liquid-gas-chem-add |
| EAST-BV-LID-SPLITTER | 99-Tc, Cr(OH)4-, Cr(total) split representing lid accumulation | NA | NA | NA | NA | f-split-2 |
| EAST-BV-LID-ACCUMULATION | accumulation of lid dust | 1.0E+08 | 0.0E+00 | 0.0E+00 | 0 | mixer-oxide-glass-formers |

**Table B-0-3 WTP and Supplemental Treatment Equipment Volumes and Identification**

| EQUIPMENT | Description | Maximum Volume (gal) | Set Volume (gal) | Minimum Volume (gal) | Flowrate (gpm) | Equipment Class |
|---|---|---|---|---|---|---|
| | | Units are as above unless otherwise noted | | | | |
| EAST-BV-MELTER-DUST | split some dust for recycle | NA | 0.684% to filter | NA | NA | p-split-2-all-phases |
| EAST-SINTERED-METAL-FILTER | Filter Dust to recycle | NA | 99.97% removed | NA | NA | solid-gas-seperator |
| EAST-BV-MELTER-DUST-SHIFT | changes phase of 3-H, H2O, NH3, and NH4 to gas | NA | 100% shift | NA | NA | phase-shifter |
| EAST-BV-MELTER-PHASE-SHIFT | changes 129-I, 14-C, 3-H, Hg-2+ to gas | NA | 100% shift | NA | NA | phase-shifter |
| EAST-BV-MELTER | Melter | 4.8E+03 | 1.0E+03 | 0.0E+00 | 250 | glass-melter |
| EAST-BV-PRODUCT | BV Product Accumulation | 1.0E+08 | 0.0E+00 | 0.0E+00 | 0 | mixer-oxide-glass-formers |
| EAST-HG-PHASE-SHIFTER | changes phase of Hg2+ from gas to solid | NA | 100% shift | NA | NA | phase-shifter |
| EAST-BV-HYDROSONIC-SCR | Condensed water in melter of-gas | NA | 66.2oF/12.0 5 psi | NA | NA | liquid-scrubber |
| EAST-BV-SCR-DILUTION-WATER | Water to scrubber | NA | NA | NA | 5 | chem-add |
| EAST-BV-SCR-DILUTION-AIR | Air to scrubber | NA | NA | NA | 4497.55 ft3/min | liquid-gas-chem-add |
| EAST-BV-SCR-CHEM-ADD | NaOH addition to have 0.1 M excess OH | NA | NA | NA | 2 | chem-add |
| EAST-BV-HEPA | HEPA Filter (99.97% removal) | NA | 70 oF/14.7 psi | NA | NA | accumulation-scrubber-uniform-split |
| EAST-BV-CARBON-FILTER | Carbon Filter (99% of 129-I removed) | NA | 498 oF/14.7 psi | NA | NA | accumulation-scrubber |
| EAST-BV-NOX-SCR | NOX Scrubber | NA | 600oF/12.79 psi | NA | NA | gas-scrubber |
| EAST-BV-NOX-SCR-DILUTION-AIR | Air add to SCR | NA | 77 oF/14.7 | NA | 0 | liquid-gas-chem-add |

| Table B-0-3 WTP and Supplemental Treatment Equipment Volumes and Identification | | | | | | |
|---|---|---|---|---|---|---|
| **EQUIPMENT** | **Description** | **Maximum Volume (gal)** | **Set Volume (gal)** | **Minimum Volume (gal)** | **Flowrate (gpm)** | **Equipment Class** |
| | | Units are as above unless otherwise noted | | | | |
| EAST-BV-NH3-GAS-CHEM-ADD | NH3 addition | NA | 77 oF/14.7 | NA | 0 | liquid-gas-chem-add |
| EAST-BV-STACK | BV Stack | NA | 77 oF/14.7 | NA | NA | Stack |

**Table 0-4 WTP Condensate/Stack Equipment Volumes and Identifications**

| EQUIPMENT | Description | Maximum Volume (gal) | Set Volume (gal) | Minimum Volume (gal) | Flowrate (gpm) | Equipment Class |
|---|---|---|---|---|---|---|
| LERF-BASIN-1 | LERF Basin | 7.80E+06 | 7.50E+06 | 2.50E+05 | 75.0 | mixer-oxide-glass-formers |
| LERF-BASIN-2 | LERF Basin | 7.80E+06 | 7.50E+06 | 2.50E+05 | 75.0 | mixer-oxide-glass-formers |
| ETF-SPLITS | ETF Splits applied | NA | NA | NA | NA | f-split-2 |
| ETF-SOLID-EFFLUENT | ETF solid effluent | 1.00E+10 | 0 | 0 | 0 | mixer-oxide-glass-formers |
| ETF-LIQUID-EFFLUENT | ETF liquid effluent | 1.00E+10 | 0 | 0 | 0 | mixer-oxide-glass-formers |
| ETF-SOLID-WASTE-DRUM | Calculates 55 gallon drums solid waste each year | NA | NA | NA | NA | 1-data-logging-sensor |
| WTP-STACK | WTP Stack | NA | 77 oF/ 14.7 psi | NA | NA | stack |

# APPENDIX C. ASSUMPTION MATRIX AND CROSSWALK

**Table C-1. Modeling Assumptions Matrix (53 sheets)**

| Assumption Item Old Header | Value | MDD Reference Section Number |
|---|---|---|
| **A2.0. Major Facilities** | | |
| **A2.1. New Waste Generation** | | |
| **A2.1.1. New Waste Introduced Via Deactivation** | | **4.3.12 New Waste Introduced Via Deactivation** |
| PUREX – Deactivation ~ 2025<br>Flush Volume Factor | 15 Kgal<br>10% | |
| T-Plant – Deactivation ~ 2025<br>Flush Volume Factor | 15 Kgal<br>22% | |
| **A2.1.2. New Waste Introduced Via Operations** | | **4.3.13 New Waste Introduced Via Operations of 222-S** |
| 222-S Laboratory<br>• Receipt Rate:<br>• Flush Volume Factor: | • 5 Kgal/year in FYs 2007 through 2017<br>10 Kgal/year from FY 2018 through the end of the mission<br>• 22% | |
| **A2.2. Waste Treatment and Immobilization Plant** | NA | |
| Key features for modeling | Key features of the WTP that will be modeled for purposes of mission planning and estimation of | This is all in the Model Descriptions Section 6- |

**Table C-1. Modeling Assumptions Matrix (53 sheets)**

| Assumption Item Old Header | Value | MDD Reference Section Number |
|---|---|---|
| (A2.2.1 WTP Process Sub-Systems) | secondary waste streams include:<br>• Feed Receipt Tanks (simplified and LAW tanks lumped)<br>• Front End Evaporator (simplified – no feed tanks)<br>• Ultrafilter (UF) System (with modified [$OH^-$] endpoint and oxidative leach)<br>• Pretreated HLW Lag Storage and Blend Tanks (simplified – 81 Kgal lumped capacity)<br>• Cesium Ion-Exchange (as a black-box)<br>• Back End Evaporator and Pretreated LAW Storage (simplified and product routing modified to interface with the East STP)<br>• HLW Melter Feed Preparation (simplified)<br>• HLW Melter (model total capacity, not individual melters)<br>• LAW Melter Feed Preparation (simplified)<br>• LAW Melter (model total capacity, not individual melters)<br>• Off-gas treatment systems except for Pretreatment Facility off-gas system).<br>• Recycle of both LAW submerged bed scrubber (SBS) and wet-electrostatic precipitator (WESP) Condensate to Back End Evaporator.<br>• Recycle of HLW Condensate (from SBS, WESP, and high-efficiency mist eliminator [HEME] – neglect canister wash water) to HLW Feed Receipt tank.<br>• Discharge of LAW Caustic Scrubber effluent and evaporator condensate to the Liquid Effluent Retention Facility (LERF)/Effluent Treatment Facility (ETF) via Pretreatment. | 10. Suggest remove from Assumption Matrix. |

**Table C-1. Modeling Assumptions Matrix (53 sheets)**

| Assumption Item Old Header | Value | MDD Reference Section Number |
|---|---|---|
| | • The WTP pretreatment facility will be configured so that a portion of concentrated pretreated LAW from the Treated LAW Concentrate Tank can be transferred to the STP in East Area as feed. This is downstream of the point to which LAW SBS condensate is recycled, so the STP feed will include a proportional fraction of SBS condensate. | |
| Technical Basis for Modeling | The basis for modeled chemical reactions and extents for estimating primary streams and secondary waste streams will be the 24590-WTP-MDD-PR-01-002, Rev 6, with flowsheet and operating mode modifications as needed to implement the other assumptions in this modeling case. Off-gas system configuration and updated split factors for all unit operations will be obtained from 24590-WTP-MDD-PR-01-002, Rev 8, with additional clarification provided by 24590-WTP-RPT-PT-02-005, Rev 3, "Flowsheet Bases, Assumptions, and Requirements" And CCN-150375. | Stated in MDD remove from matrix. |
| **A2.2.2. Low-Activity Waste Processing Schedule** | | **6.3.1 LAW Feed Delivery Plans and Hot Commissioning** |
| LAW feed delivery dates | Start delivery of the first LAW feed batch on 5/1/2018 and deliver remaining LAW feed as needed to keep the WTP operating within model constraints. The first LAW feed batch will be provided by a decant transfer of about 131 Kgal of supernate from AY-102 to the LAW feed receipt tanks. | **Table 6-6** |

**Table C-1. Modeling Assumptions Matrix (53 sheets)**

| Assumption Item Old Header | Value | MDD Reference Section Number |
|---|---|---|
| LAW Pretreatment Ramp Up | Support the down-stream demand for pretreated LAW up to a maximum UF permeate rate of 15.6 gpm. | **Table 6-6** |
| LAW Vitrification Ramp Up<br>(Including LAW Hot Commissioning) | From - To MTG/d (net rate) [1]<br>5/15/2018 – 9/30/2018 8.07[2]<br>10/1/2018 – 12/31/2019 9.0<br>1/1/2020 – 12/31/2020 18.0<br>1/1/2021 – end of mission 21.0 | **Table 6-6** |
| Complete Waste Processing | One goal of the run is to determine when waste processing completes with the stated assumptions. | **Not in MDD** |
| **A2.2.3. LAW Feed Receipt Tanks** | | **C.1.1** |
| LAW Feed Receipt Tank Use | 1.5 Mgal Total Capacity; be capable of receiving 1 Mgal without interruption. | **6.4.1 LAW Feed Receipt Tanks** |

[1] The net rate is the realized capacity and is obtained by multiplying the design capacity (30 MTG/d) times a total operation efficiency (TOE). The TOE for the WTP LAW melter at full capacity is 70%.

[2] The 8.07 MTG/d melter rate was calculated as the average rate needed to produce 188 ILAW packages during hot commissioning of the LAW melter. This may be increased by the modeler if necessary to produce 188 ILAW packages during hot commissioning.

**Table C-1. Modeling Assumptions Matrix (53 sheets)**

| Assumption Item Old Header | Value | MDD Reference Section Number |
|---|---|---|
| **A2.2.4. LAW Pretreatment Process** | **C.1.2** | **6.4.7 Cs Ion Exchange Spent Resin** |
| LAW WTP Process Model | • The LAW (liquid) fraction of Envelope C waste from tanks AN-102 and AN-107 does not need to be segregated from other waste within the pretreatment facility since it will be pretreated in tank farms prior to delivery to WTP.<br>• There will be approximately 300 gallons (2005 $lb_m$ air-dried) of spent cesium ion exchange resin generated for every 300,000 gallons of supernate treated through the cesium ion exchange system.<br>• Loading of the spent cesium ion exchange resin will be based on the constituents and concentrations listed in **Error! Reference source not found.** after being prepared for disposal. | **First bullet in general MDD report (sections 6.2.1 and 13 Sr/TRU Precipitation), next two in 6.4.7.** |
| **A2.2.5. LAW Melter Design and Operation** | | **Section 7.3.1-7.3.2** |
| LAW melter glass capacity | 6,900 gallons | **7.3.1 LAW Melter Glass Capacity** |
| LAW melter operation | • One LAW melter is replaced every 2.5 years.<br>• At the time of replacement, the contents of the melter (6,900 gallons) are sent to a "Spent" melter stream.<br>• The glass remaining in the LAW melter at the end of the mission will be sent to the spent melter stream. | **7.3.2 Melter Replacement** |
| **A2.2.7. Immobilized Low-Activity Waste (ILAW) Formulation and Packaging** | | |

**Table C-1. Modeling Assumptions Matrix (53 sheets)**

| Assumption Item Old Header | Value | MDD Reference Section Number |
|---|---|---|
| ILAW Process | • The total sodium loading of LAW glass from pretreated feed will be determined using the Department of Energy (DOE) Model (D-03-DESIGN-004), which maximizes the sodium oxide loading in the LAW glass subject to the following constraints:<br>$[Na_2O] \leq 20 wt\%$<br>$[SO_3] \leq 0.8 wt\%$<br>• The composition of the LAW glass will be estimated using a glass recipe model similar to that described in 24590-WTP-MRQ-PO-04-0065 (DRAFT). Sulfate volatilization will be estimated using Equation 3.1-5f of 24590-WTP-RPT-PT-02-005.<br>• No loss of production is incurred by the replacement of a new melter. | **7.3.3 ILAW Formulation and Packaging** |
| ILAW Glass Density | 2.6 MT/m$^3$ | **7.3.4 ILAW Glass Density** |
| ILAW Package Net Mass | 5.92 MT | **7.3.5 ILAW Package Mass** |
| **A2.2.8. ILAW Interim Storage Capacity** | | |
| ILAW Interim Storage Capacity | No lag storage of ILAW in WTP. | **7.3.6 ILAW Interim Storage Capacity** |
| **A2.2.9. High-Level Waste Processing Schedule** | | |

**Table C-1. Modeling Assumptions Matrix (53 sheets)**

| Assumption Item Old Header | Value | MDD Reference Section Number |
|---|---|---|
| HLW feed delivery dates | Start delivery of the first batch group of HLW feed on 5/15/2018 and deliver remaining HLW feed as needed to keep the WTP operating within model constraints. The first batch group of HLW feed will be provided from AY-102 using existing supernate or by adding sufficient water to the decanted solids to obtain a slurry solids loading between 10 and 200 grams solids per liter of slurry (150 g/liter nominal). | **6.3.2 HLW Feed Delivery and Hot Commissioning** |
| HLW Vitrification Ramp-up | From - To HLW MTG/d (net rate)<br>5/15/2018 – 9/30/2018 1.44[3]<br>10/1/2018 – 12/31/2019 3.0<br>1/1/2020 – 12/31/2020 4.0<br>1/1/2021 – 2/5/2024 4.2[4]<br>2/6/2024 – end of mission 5.25[5] | **Table 6-7** |
| **A2.2.10. HLW Feed Receipt Tanks** | | **6.4.2 HLW Feed Receipt Tanks/Lag Storage** |
| HLW Feed Receipt Tank Usage | • Sufficient space to receive 160,000 gallons (600 $m^3$) without interruption.<br>• HLW feed deliveries do not need to be suspended when the LAW feed receipt tanks contain waste from either AN-102 or AN-107. | **6.4.2 HLW Feed Receipt Tanks/Lag Storage** |

[3] The 1.3 MTG/d melter rate was calculated as the average rate needed to produce 56 IHLW canisters during hot commissioning of the HLW melter. This may be increased by the modeler if necessary to produce 56 IHLW canisters during hot commissioning.

[4] Assumes two HLW melters, each 3 MTG/day design at a 0.7 TOE.

[5] Assumes two second-generation HLW melters, each 3.75 MTG/day design at a 0.70 TOE.

**Table C-1. Modeling Assumptions Matrix (53 sheets)**

| Assumption Item Old Header | Value | MDD Reference Section Number |
|---|---|---|
| | • All HLW batches must be at least 130,000 gallons total volume and contain between 10 and 200 grams of unwashed solids per liter of slurry.<br>• [6]Deliver the HLW solids at a target nominal solid concentration of 8-wt% to facilitate more efficient WTP operations. | |
| **A2.2.11. HLW Pretreatment Process** | | **6.4.4-6.4.6** |
| HLW WTP Process Model | • The water wash factors in the TWINS on 3/7/2007 will be used for partitioning waste into solid and liquid phases during retrieval and staging.<br>• Sufficient caustic will be added to the waste during caustic leaching so that 3.0 M [OH-] remains in solution after the leach reactions are complete.[7]<br>• The caustic leach factors in the TWINS on 3/7/2007 will be used as the basis for computing the caustic leach factors associated with each delivered batch of HLW solids and for the entrained solids.<br>• All solids delivered with the HLW feed and entrained solids delivered with the LAW feed will undergo caustic leaching, and caustic-leached solids containing more than | **6.4.5 Wash and Caustic Leach Factors**<br>**6.4.6 Caustic Leaching**<br>**6.4.5 Wash and Caustic Leach Factors**<br>**6.4.6 Caustic Leaching** |

[6] This solid concentration should be interpreted as a target value being used to determine the feasibility of its application and not as a rigorous constraint.

[7] The WTP pretreatment processes modeled in the ORP Case has an underlying assumption that Al dissolved during the caustic leaching step can be kept in solution at 3 M free $OH^-$. Recent work on Al solubility by Bechtel National, Inc. indicates that more caustic may be needed to keep the Al in solution and avoid the potential for solids to precipitate in the Cs ion exchange system. The impact to the LAW glass quantity due to using NaOH as the source of $OH^-$ has been estimated to be as high as an additional 34,000 MT of Na. This represents about a 50% increase in the total mass of Na that would need to be immobilized in the LAW glass during the RPP mission. The ORP and Ecology case runs did not assume that more caustic would be needed to keep Al in solution.

**Table C-1. Modeling Assumptions Matrix (53 sheets)**

| Assumption Item Old Header | Value | MDD Reference Section Number |
|---|---|---|
| | 5,000 μg Cr / g dried solids will undergo oxidative leaching. The insoluble fraction remaining will be incorporated into HLW glass.<br>• An oxidative leach process that removes Cr from the HLW sludge without impact on cycle time or other species will be implemented in the ultrafilters. Reaction stoichiometry and endpoint (5,000 μg Cr / g dried solids) are described in RPP-15552. | **6.4.7 Oxidative Leaching** |
| **A2.2.12. HLW Melter Design and Operation** | | |
| HLW melter glass capacity | 1,800 gallons | **9.3.1 HLW Melter Capacity** |
| HLW melter design | • One HLW melter is replaced every 2.5 years.<br>• At the time of each melter replacement, 823 gallons of HLW glass are sent to a "Spent" melter HLW melter stream.<br>• The glass remaining in the HLW melter at the end of the mission will be sent to the spent melter stream. | **9.3.4 HLW Melter Replacement** |
| **A2.2.14. Immobilized High-Level Waste (IHLW) Formulation and Packaging** | | |
| Method for Estimating HLW Waste Oxide Loading | Glass Properties Model modified as follows.<br>• Increase the maximum spinel liquidus temperature constraint from 1050 ºC to 1100 ºC.<br>• Increase the maximum viscosity constraint from 5.5 Pa•s to 10 Pa•s.<br>• Increase the maximum $Cr_2O_3$ constraint from 0.5 wt% to 1.0 wt%. | **9.3.5 HLW Waste Oxide Loading Estimation** |

**Table C-1. Modeling Assumptions Matrix (53 sheets)**

| Assumption Item Old Header | Value | MDD Reference Section Number |
|---|---|---|
| | • Use a maximum zircon liquidus temperature limit of 1050 ºC.<br>• Use a Product Consistency Test (PCT) upper limit of 2 g/m$^2$. | |
| IHLW Glass Density | 2.7 MT/m$^3$ | **9.3.2 IHLW Glass Density** |
| IHLW Canister Net Mass | 3.2 MT (thin-walled canister) | **9.3.3 IHLW Canister Mass** |
| **A2.2.15. IHLW Interim Storage** | | |
| IHLW Interim Storage Capacity | No IHLW canisters will be interim-stored in the WTP.[8] | **9.3.6 IHLW Storage** |
| **A2.3. Supplemental Treatment** | | **Section 12.3** |
| **A2.3.1. TRU Sludge Packaging** | | |
| Contact-Handled (CH) Sludge Packaging Feed Delivery | • The CH Supplemental TRU Treatment and Packaging process will be available on 10/1/2013 to process waste from the 200-Series SSTs listed below.<br>• The system will first be located near B-Farm and then moved to T-Farm. There will be a 10-day outage between tanks and 60-day outage to move equipment between farms.<br>• Tanks [B-201, B-202, B-203, B-204], [T-201, T-202, T-203, T-204], T-111, T-110, and T-104 will be retrieved and sent for packaging as CH-TRU. The tanks will be retrieved and | **12.3.1 CH-TRU Sludge Packaging Delivery** |

[8] No credit is being taken for any WTP-provided storage for cooling IHLW canisters, nor for any WTP-provided buffer capacity

**Table C-1. Modeling Assumptions Matrix (53 sheets)**

| Assumption Item Old Header | Value | MDD Reference Section Number |
|---|---|---|
| | packaged in the stated order except that the tank order within the [brackets] can be changed.<br>• The waste from the B-200 and T-200 series SSTS, T-104, T-110, and T-111 will be retrieved using the volume of retrieval water needed to achieve the as-retrieved volume given in **Error! Reference source not found.**, without impact to DST space (i.e., no liquids are returned to the DST system).<br>• It is assumed that this waste can be treated and packaged as contact-handled TRU and disposed of at WIPP.<br>• There will be no water or waste sent to the DST system. | |
| Remote-Handled (RH) Sludge Packaging Feed Delivery | • The RH Supplemental TRU Treatment and Packaging process will be available on 5/9/2025. The process will be mobile and located near the tank farm where the RH-TRU waste is located, i.e., AW-Farm, B-Farm, and T-Farm.<br>• All remote-handled sludge will be water-washed prior to treatment to remove soluble waste constituents.<br>• The solids in tank SY-102 will be moved across the site as soon as the waste currently in tank AN-104 has been moved out and will be combined with the solids in tank AW-105 or AW-103 as space allows.<br>• Supernatant liquid will be decanted from tank AW-103 when sufficient DST space is available after June 2024. The waste solids in tank AW-103 will be washed four times over a nine-month period, or as DST space allows, | **C.1.3** **12.3.2 RH-TRU Sludge Packaging Delivery and 12.3.3 RH-TRU Feed Preparation Broken down into two assumptions, the first one discusses delivery schedule and the other one discusses the steps for feed preparation (wash solids, settle, ets..)** |

**Table C-1. Modeling Assumptions Matrix (53 sheets)**

| Assumption Item Old Header | Value | MDD Reference Section Number |
|---|---|---|
| | using one gallon of 0.01 M NaOH solution for each gallon of the initial bulk settled solids for each wash. After each wash, the solids are settled to 40 wt% before decanting the wash solution for feed to the evaporator. The first wash of the waste solids in AW-103 is assumed to dissolve the saltcake portion. Existing water wash factors and the Sr solubility model will be applied to estimate the overall wash effectiveness.<br>• Add enough 0.01 M NaOH to deliver an approximately 10 wt% solids slurry for packaging.<br>• Supernatant liquid will be decanted from tank AW-105 after July 2025 and following the AW-103 washing as DST space allows. The waste solids in tank AW-105 will be washed four times over a nine-month period starting 8/9/2025 using one gallon of 0.01 M NaOH solution for each gallon of the initial bulk settled solids for each wash. After each wash, the solids are settled to 40 wt% before decanting the wash solution for feed to the evaporator. The first wash of waste solids in AW-105 is assumed to dissolve the saltcake portion. Existing water wash factors and the Sr solubility model will be applied to estimate the overall wash effectiveness.<br>• Add enough 0.01 M NaOH to deliver an approximately 10 wt% solids slurry for packaging.<br>• After packaging the RH-TRU waste from the DSTs, the packaging facility will be located near B-Farm to wash and package the waste | |

**Table C-1. Modeling Assumptions Matrix (53 sheets)**

| Assumption Item Old Header | Value | MDD Reference Section Number |
|---|---|---|
| | from tanks B-107, B-110, and B-111. The retrieved SST waste will be washed four times over a nine-month period in the B-Complex Waste Retrieval Facility (WRF) using one gallon of 0.01 M NaOH solution for each gallon of the initial bulk settled solids for each wash. After each wash, the solids are settled to 40 wt% before decanting the wash solution for feed to the evaporator. The first wash of the waste solids will dissolve the saltcake portion. Existing water wash factors and the Sr solubility model will be applied to estimate the overall wash effectiveness.<br>• Add enough 0.01 M NaOH to deliver an approximately 10 wt% solids slurry for packaging.<br>• After packaging the RH-TRU waste from the B-Farm SSTs, the packaging facility will be located near T-Farm to wash and package the waste from tanks T-105, T-107, and T-112. The retrieved SST waste will be washed four times over a nine-month period in the T-Complex WRF using one gallon of 0.01 M NaOH solution for each gallon of the initial bulk settled solids for each wash. After each wash, the solids are settled to 40 wt% before decanting the wash solution for feed to the evaporator. The first wash of the waste solids will dissolve the saltcake portion. Existing water wash factors and the Sr solubility model will be applied to estimate the overall wash effectiveness.<br>• Add enough 0.01 M NaOH to deliver a 10 wt% solids slurry for packaging. | |

**Table C-1. Modeling Assumptions Matrix (53 sheets)**

| Assumption Item Old Header | Value | MDD Reference Section Number |
|---|---|---|
| Sludge Packaging Process | The process flowsheet for the CH-TRU sludge treatment is described in RPP-21970, Rev. 0. For modeling purposes, the two dryers may be lumped into one dryer of equivalent treatment capacity. For planning purposes, the same flowsheet will be used for processing the water-washed sludge from the RH-TRU Tanks. | **12.3.4 Sludge Packaging Process Assumptions**<br><br>**In MDD Description.** |
| | • The slurry will be transferred to the Feed Receipt Process System modeled as five tanks, each with a working volume of 7,200 gallons. | **12.3.4.1 Dryer Operation** |
| | • The slurry, carrier and heat are continuously added to the dryer, while dried product is withdrawn to maintain a product with 10 wt% water and 80 wt% waste loading (both relative to waste, water and carrier). | **12.3.4.1 Dryer Operation** |
| | • The maximum capacity of the Sludge Packaging Process is a slurry feed rate of 5.6 gpm.[9] The slurry is fed to the dryer at the maximum of the stated dryer feed rate or the capacity of the retrieval technology being used to retrieve the TRU waste, whichever is most constraining. | |
| | • Vermiculite is added to the dryer as a flowability agent and to the drum as a sorbent and sand is added to the dryer as a scouring agent. The total vermiculite and sand added during the packaging process will be modeled as the addition of $SiO_2$ to the dryer at a ratio of one mass of $SiO_2$ per eight masses of slurry feed on a dry basis. (Note: Silica comprises 97.5 % of the total mass of the additive and the | **12.3.4.2 Sludge Packaging** |

[9] The maximum slurry feed rate in gallons per minute is based on a daily slurry rate of 8,040 gallons (i.e., 8,040 gallons of slurry per day).

**Table C-1. Modeling Assumptions Matrix (53 sheets)**

| Assumption Item Old Header | Value | MDD Reference Section Number |
|---|---|---|
| | composition of vermiculite can vary widely so ignoring the non-$SiO_2$ constituents in vermiculite does not significantly increase the uncertainty in the packaged waste composition.) | |
| | • Dryer retention factors (i.e., the fraction of a species that is retained in the dryer during processing) are the same as for the 242-A Evaporator Vapor-Liquid Separator. Condenser retention factors are the same as the 242-A Evaporator Primary Condenser Unit. For those species that are not addressed in the 242-A Evaporator data, a partitioning factor of 8.0E+06 is applied to the feed for that constituent. | **12.3.4.1 Dryer Operation** |
| | • Liquid effluent will either be transferred to the LERF via Tank Truck or recycled to the Retrieval project. For planning purposes, it will be assumed that the liquid effluent is transferred only to LERF (no recycle) and modeled as a continuous transfer. | **In Model description 12.2, not an assumption.** |
| | • The dried CH-TRU waste product is packaged in 55-gallon drums containing 620 $lb_m$ of product per drum.[10] | **12.3.4.2 Sludge Packaging** |
| | • The dried RH-TRU waste product is packaged in an RH-TRU Waste Canister containing 2,825 $lb_m$ of product per canister. Each | **12.3.4.2 Sludge Packaging** |

[10] Although not explicitly modeled, the CH-TRU drums are loaded up to fourteen drums to into a TRUPACT-II shipping container, three TRUPACT-IIs in a shipment, for a maximum of 42 drums per shipment.

**Table C-1. Modeling Assumptions Matrix (53 sheets)**

| Assumption Item Old Header | Value | MDD Reference Section Number |
|---|---|---|
| | canister will be shipped to WIPP in an RH-TRU 72-B Shipping Package.[11]<br>• The washed solids will require remote handling for packaging, can be treated and packaged as remote-handled TRU for disposal at the Waste Isolation Pilot Plant (WIPP). | **In Model description 12.2, not an assumption.** |
| **A2.4.1. Supplemental LAW Processing** | | 14.3 Supplemental Treatments |
| Supplemental Treatment Demonstration | • A DBVS will be located in the 200 West Area (west of S-Farm) and be operated at a net rate of 2.745 MTG/d starting on 3/1/2011 to process 260 MT Na from the low-curie waste from tank S-109. The demonstration will be completed by 10/23/2012.<br>• The DBVS will be fed directly from S-109 with no solids entrained out of S-109. The feed will be delivered at 5 M Na. The S-109 waste retrieval will be controlled to limit the total activity in the retrieved waste to 0.0062 Ci per liter (at the 5 M Na feed concentration) for the demonstration.<br>• The DBVS process assumptions (other than process rate) are given in the STP Process Basis Section. | **14.3.1 Demonstration Bulk Vitrification Model Assumptions** |

[11] This assumes an inner canister volume of 0.89 $m^3$ per DOE/CAO 95-1095 Appendix I, a 90% fill, and a bulk dried waste product density of 1.60 Kg/L. The density of the dried RH-TRUM product is assumed to be the same as the dried CH-TRU product as stated in RPP-21970 Rev 0, Assumption 3.

**Table C-1. Modeling Assumptions Matrix (53 sheets)**

| Assumption Item Old Header | Value | MDD Reference Section Number |
|---|---|---|
| Supplemental Treatment Demonstration Extension | • The BVS facility will be refurbished and re-permitted for extended operation after a one-year outage.<br>• The refurbished facility starts operating on 10/23/2013 at a net rate of 3.66 MTG/day and operates as long as low-curie feed from tanks S-109 and S-105 is available.<br>• The feed to the BVS process for extended operation includes:<br>  ○ Low-curie feed from the continued selective dissolution of tank S-109 waste. It is expected that continued selective dissolution of waste in S-109 will continue until the cumulative removal of waste reaches 90%. Partitioning of the waste components will be approximated using the selective dissolution factors in TFCOUP, Rev. 6 Table A-14. About 80% of the Na, and 20% of the Cs currently in the tank will be sent to the DBVS or the BVS. The remaining waste will be retrieved later.<br>  ○ Low-curie feed from the selective dissolution of tank S-105 waste. It is anticipated that selective dissolution will continue until the cumulative removal of waste reaches 90%. Partitioning of the waste components will be approximated using the selective dissolution factors TFCOUP, Rev. 6 Table A-14. About 80% of the Na, and 20% of the Cs currently in the tank will be sent to the DBVS or the BVS. An additional 9% will be retrieved later to an Interim Pretreatment System, | **14.3.2 Supplemental Treatment Demonstration (DBVS) Extension** |

**Table C-1. Modeling Assumptions Matrix (53 sheets)**

| Assumption Item Old Header | Value | MDD Reference Section Number |
|---|---|---|
| | leaving approximately 1% of the waste as a residual.<br>○ The BVS process assumptions (other than process rate) are given in the STP Process Basis Section. | |
| East Area Supplemental Treatment Process | • A production process facility will be located in the 200 East Area.<br>• The production facility, consisting of four bulk vitrification melter lines, starts hot testing on 2/1/2019 and operates at 25% of full capacity (about 3.66 MTG/d) for eight months.<br>• Full capacity operation starts on 10/1/2019 at a rate of 14.65 MTG/d.<br>• "Excess" pretreated LAW from the WTP will be used to feed the East Area Supplemental Treatment process.<br>• The East STP process assumptions (other than process rate) are given in the STP Process Basis Section. | **14. 3.3 East Area Bulk Vitrification** |
| West Area Interim Pretreatment System (IPS) | • An interim pretreatment system will be installed in two new vaults located near SY-Farm.<br>• Solid/liquid separation will be performed in tank SY-101 by the installation of two rotary micro filtration units, which will remove all entrained solids.<br>• Waste pretreatment will be performed using a regenerable Cs ion exchange (IX) resin contained in one of two new vaults. In one vault, two IX resin columns will be used to remove Cs; one as a lead column and as a one polishing column. Cs removal will proceed until breakthrough of Cs is observed, at which time the system will be shut down and the resin | **14.3.8 West Area IPS Feed Delivery and Model Design Description Section 14.2.** |

**Table C-1. Modeling Assumptions Matrix (53 sheets)**

| Assumption Item Old Header | Value | MDD Reference Section Number |
|---|---|---|
| | regenerated using an acid eluent. The acid eluent is collected in an eluate tank within the Cs IX vault, sampled and analyzed, neutralized with caustic, and transferred to tank SY-102 for subsequent transfer to an East Area DST.<br>• Pretreated waste is sent to one of two new double-contained receiver tanks (DCRTs) located in the second of the two new vaults. Each new DCRT has a working volume of 41,400 gallons. Pretreated waste from the Cs IX system will be sent to one DCRT while the pretreated waste in the other DCRT is sampled and analyzed before being sent to the West Area Supplemental Treatment Plant.<br>• Since the pretreatment system is being started before the West Area STP, pretreatment operations will start on 2/28/2014 and continue until the DCRTs are full. Pretreatment operations will resume when the West Area STP starts up and removes pretreated waste from the DCRTs.<br>• For planning purposes, the regenerable ion exchange system is assumed to perform similarly to the WTP Pretreatment Facility ion exchange system, except that the average $^{137}$Cesium concentration in the pretreated waste is assumed to be 1.5 E-5 Ci per mole of sodium.<br>• For planning purposes, the capacity of the IPS is assumed to exceed the capacity of the West Supplemental Treatment Plant (West STP).<br>• Waste in tank SY-101 will be used as the first feed to the pretreatment system. Then the supernatant liquid in tank SY-103 will be | |

**Table C-1. Modeling Assumptions Matrix (53 sheets)**

| Assumption Item Old Header | Value | MDD Reference Section Number |
|---|---|---|
| | transferred to SY-101 for solid/liquid separation and delivery to Cs IX. The salt solids in tank SY-103 will be dissolved, sampled and analyzed, and transferred to tank SY-101. After SY-103 has been emptied, it will be used to receive and sample wastes for staging into SY-101 and processing through Cs IX.<br>• No estimate will be made of the loading of radionuclides or chemical species on the spent ion exchange resin. | |
| West Area Supplemental Treatment Process | • A production process facility will be located in the 200 West Area near the SY Farm and the IPS Facility.<br>• The production facility, consisting of four melter lines, starts hot testing on 7/2/2014 and operates at 25% of full capacity (about 3.66 MTG/d) for eight months.<br>• Full capacity operation starts on 3/2/2015 at a rate of 14.65 MTG/day.<br>• The West Area STP operates to process as much liquid waste from the West Area SSTs as practical.<br>• The West STP process assumptions (other than process rate) are given in the STP Process Basis Section. | **14.3.4 West Area Supplemental Treatment Process** |
| WTP Process Considerations | The WTP pretreatment facility will be configured so that a portion of concentrated pretreated LAW from the Treated LAW Concentrate Tank can be transferred to the East Area Supplemental Treatment Plant (STP) as feed. This is downstream of the point to which LAW SBS and WESP condensate is recycled, so the STP feed will include a proportional | **Discussed in Model Description Section 14.2.** |

**Table C-1. Modeling Assumptions Matrix (53 sheets)**

| Assumption Item Old Header | Value | MDD Reference Section Number |
|---|---|---|
| | fraction of the SBS and WESP condensate. | |
| STP Process Basis (including DBVS) | • The bulk vitrification processes will be modeled using a simplified continuous flowsheet that implements the overall mass balances for the primary and secondary waste streams as shown in Figures 2-2 and 8-4 of RPP-20528, Rev 1. The mass balance spreadsheet developed for the flowsheet and documented in SVF-1102, Rev 0, consolidates and elaborates on many of the underlying technical assumptions, most notably, the basis for many of the process splits. Any parameters not specifically addressed by those two documents may be obtained from the process design criteria provided in 145579-A-DC-002, Rev 0F. However, the mixture of glass forming minerals specified in Table 1 of ST07.004 will be used instead of Hanford soil.<br>• The three DBVS/BVS feed receipt tanks will be modeled as one tank with a 45,000-gallon working capacity. | **Discussed in Model Description Section 14.2.**<br><br>**Discussed in Model Description Section 14.2.** |
| | • The twelve 15, 000 gallon West STP feed receipt tanks will be modeled as one tank with an 180,000-gallon working capacity.<br>• The twelve 15, 000 gallon East STP feed receipt tanks will be modeled as one tank with an 180,000-gallon working capacity.<br>• The $Na_2O$ loading in the product will be a nominal 21.24-wt% based on waste sodium. | **Discussed in Model Description Section 14.2.**<br><br>**Discussed in Model Description Section 14.2.**<br><br>**14.3.5 Bulk Vitrification Product Loading** |

**Table C-1. Modeling Assumptions Matrix (53 sheets)**

| Assumption Item Old Header | Value | MDD Reference Section Number |
|---|---|---|
| | • Single-use box lids will be used in the DBVS/BVS system and each box with lid will retain 2.70% of the $^{99}$Tc fed to the box melter as a non-glass waste form.<br>• Multiple-use box lids will be used in the West STP system. Retention of $^{99}$Tc will be modeled as a reduced retention due to the multi-use lids. Each box with lid will retain 0.39% of the $^{99}$Tc fed to the box melter as a non-glass waste form. | **14.3.6 Bulk Vitrification Lid Retention**<br><br>**14.3.6 Bulk Vitrification Lid Retention** |
| Product and Packaging | Bulk vitrification is used as the supplemental treatment process to immobilize LAW. The following will be used to estimate bulk vitrification product volume and package count.<br><br>• Glass density is 2.65 MT/m$^3$.<br>• Packaged in 35 m$^3$ roll-off boxes, each filled with 42.6 MT glass, neglecting the mass of clean glass added to top off the box. | **14.3.7 Bulk Vitrification Product Volume and Packaging** |
| Second ILAW Facility | No second ILAW facility is constructed. | **14.3.9 Second ILAW Facility** |
| **A2.5 In-Tank Sr/TRU Precipitation** | | Section 13.3 |
| In-tank Demonstration | • After 3/1/2020[12], if necessary, clean out AP-102 by decanting supernate down to 10 inches above any existing solids layer. | **13.3.1 In-Tank Sr/TRU Precipitation Demonstration Schedule and the processing steps are described in the model design** |

[12] The ability to clean out AP-102 depends on the availability of DST space. The AP-102 cleanout may be achieved by delivering waste from AP-102 to the WTP before 3/1/2020. If AP-102 has not been delivered to the WTP and the DST system is full, the AP-102 cleanout may be delayed until space becomes available by delivering AP-102, or other LAW feed, to the WTP.

**Table C-1. Modeling Assumptions Matrix (53 sheets)**

| Assumption Item Old Header | Value | MDD Reference Section Number |
|---|---|---|
| | • Sometime in April 2020, transfer 50 Kgal of supernate from AN-107 into AP-102, mixing it with the 10 inch liquid heel, and adding enough water to dilute the Na concentration to 5.5 M.<br>• Add the necessary reagents [5.308 gallons of 3.83 M $NaMnO_4$ and 6.723 gallons of 3 M $Sr(NO3)_2$ each per 1000 gallons of diluted waste] and simulate the Sr/TRU precipitation by applying the reactions and removal factors given in Section A2.5 of TFCOUP, Rev. 6.<br>• Simulate the reaction time and solids settling time by waiting 30 days. (Note that this may be considered conservatively long as the reaction requires a minimum of 4 hours [per RPP-24809] and the settling of C-Farm solids is assumed to occur within 3 to 5 days. Also, some time may be needed for sampling and analysis of the pretreated waste and evaluation of the results before declaring the demonstration was successful.) | **description 13.2.** |
| In-tank Precipitation | After successful completion of the demonstration, the wastes in AN-102 and AN-107 will be transferred to AP-102 in four batches to precipitate Sr and TRU as outlined below. The pretreated supernate will be delivered to WTP as Envelope A feed. The Sr/TRU precipitate will be blended with other tank solids and delivered to WTP as HLW Envelope D feed.<br>**For pretreatment of the AN-107 waste:**<br>• Add 372 Kgal of waste from AN-107 to AP-102, mixing with the waste from the demonstration, and adding enough water to | **13.3.2 In Tank Sr/TRU Precipitation Schedule and the processing steps are described in the model design description 13.2.** |

**Table C-1. Modeling Assumptions Matrix (53 sheets)**

| Assumption Item Old Header | Value | MDD Reference Section Number |
|---|---|---|
| | dilute the Na concentration to 5.5 M.<br>• Add the necessary reagents (in the same ratio as used in the demonstration) and simulate the Sr/TRU precipitation by applying the reactions and removal factors.<br>• Simulate the reaction time and solids settling time by waiting 30 days.<br>• Decant the pretreated supernate to another DST for sampling before delivery to the WTP.<br>• Add 422 Kgal of waste from AN-107 to AP-102, mixing with the 10-inch liquid heel.<br>• Add about 100 Kgal of flush water to tank AN-107 to dilute remaining supernate heel and transfer to AP-102 for treatment with the second AN-107 Batch, adding enough water to dilute the Na concentration to 5.5 M. (Note that none of the solids in AN-107 is removed by the flush water.)<br>• Add the necessary reagents (in the same ratio as used in the demonstration) and simulate the Sr/TRU precipitation by applying the reactions and removal factors.<br>• Simulate the reaction time and solids settling time by waiting 30 days.<br>• Decant the pretreated supernate to another DST for sampling before delivery to the WTP.<br>**For pretreatment of the AN-102 waste:**<br>• Add 456 Kgal of waste from AN-102 to AP-102, mixing with the 10-inch liquid heel, and adding enough water to dilute the Na concentration to 5.5 M.<br>• Add the necessary reagents (in the same ratio as used in the demonstration) and simulate the | |

**Table C-1. Modeling Assumptions Matrix (53 sheets)**

| Assumption Item Old Header | Value | MDD Reference Section Number |
|---|---|---|
| | Sr/TRU precipitation by applying the reactions and removal factors.<br>• Simulate the reaction time and solids settling time by waiting 30 days.<br>• Decant the pretreated supernate to another DST for sampling before delivery to the WTP.<br>• Add 428 Kgal of waste from AN-102 to AP-102, mixing with the 10-inch liquid heel.<br>• Add about 100 Kgal of flush water to tank AN-102 to dilute remaining supernate heel and transfer to AP-102 for treatment with the second AN-102 Batch, adding enough water to dilute the Na concentration to 5.5 M. (Note that none of the solids in AN-102 is removed by the flush water.)<br>• Add the necessary reagents (in the same ratio as used in the demonstration) and simulate the Sr/TRU precipitation by applying the reactions and removal factors.<br>• Simulate the reaction time and solids settling time by waiting 30 days.<br>• Decant the pretreated supernate to another DST for sampling before delivery to the WTP, or deliver from AP-102 (by decanting the supernate) depending on the availability of DST space. | |
| **A2.6. Waste Disposal Sites** | | Section 15.0 |
| ILAW Facility Need Dates<br>(Integrated Disposal Facility; IDF) | The IDF will be operational at the beginning of FY 2011 (10/1/2010). The ILAW produced by the Supplemental Treatment demonstration can be safely stored until the IDF is available. | **15.1.1 Integrated Disposal Facility (IDF)** |

**Table C-1. Modeling Assumptions Matrix (53 sheets)**

| Assumption Item Old Header | Value | MDD Reference Section Number |
|---|---|---|
| IHLW Facility Need Dates<br>(Project W-464) | • The IHLW interim storage facility (the Canister Storage Building), being upgraded by Project W-464, will be operational on 9/29/2015 and provide interim storage for up to 880 IHLW canisters.<br>• The need date for the Canister Storage Building (CSB) will be the date on which the first IHLW is produced (estimated to be 5/17/2018).<br>• For planning purposes, the first 880 IHLW canisters will be stored in the CSB.[13]<br>• The Hanford Shipping Facility (HSF) for IHLW will be located in the 200 Area and will be operational on 4/5/2019. If this date is later than the date determined by the model run, it will be accelerated to match that date.<br>• The shipping rate is up to two canisters of IHLW per day – first priority given to shipping newly created IHLW canisters beyond the 880 stored at the CSB – second priority is given to emptying the CSB after HLW vitrification is finished. | **15.1.2 Canister Storage Building and Hanford Shipping Facility** |
| **A2.7. Cesium and Strontium Capsule Processing** | | |
| Cesium and Strontium Capsules | Cesium and strontium capsules are disposed separately by U.S. Department of Energy, Richland Operations Office (RL) and not incorporated into HLW glass in the WTP. | **15.1.3 Waste Encapsulation and Storage Facility** |

[13] No credit will be taken for the 24 canisters of WTP-provided storage for cooling IHLW canisters, nor for the 24 canisters of WTP-provided buffer capacity.

**Table C-1. Modeling Assumptions Matrix (53 sheets)**

| Assumption Item Old Header | Value | MDD Reference Section Number |
|---|---|---|
| **A3.0. Retrieval and Closure** | | |
| **A3.1. SST Interim Stabilization** | | |
| Saltwell liquid pumping | None; saltwell pumping was completed in March 2004. | **In Model Description Section 3.2** |
| **A3.2. SST Retrieval History** | | |
| SST retrieval history and status | As of 4/1/2007, retrieval actions have been completed or are in progress (IP) for the following tanks[14]:<br>Tank — Start Date — End Date/Status<br>C-103 — 11/06/2005 — 8/23/2006[15]<br>C-106 — 11/18/1998 — 12/31/2003<br>C-108 — 12/20/2006 — IP<br>C-201 — 10/25/2005 — 3/23/2006<br>C-202 — 6/30/2005 — 8/11/2005<br>C-203 — 6/30/2004 — 3/24/2005<br>C-204 — 7/23/2006 — 12/11/2006<br>S-102 — 12/16/2004 — IP<br>S-112 — 9/28/2003 — 3/28/2007 | **3.3.1 SST Retrieval History** |

[14] The retrieval history and status is indexed to 4/1/2007 to match the tank waste inventory and historical transfer data used as input to the model run. Since 4/1/2007, the retrieval of waste from tank C-109 was started on 6/19/2007.

[15] The retrieval end date of 8/23/2006 for tank C-103 is based on the completion of the final water rinses.

**Table C-1. Modeling Assumptions Matrix (53 sheets)**

| Assumption Item Old Header | Value | MDD Reference Section Number |
|---|---|---|
| **A3.3 SST Retrieval Sequencing** | | |
| Near-term retrieval sequence (into FY 2019) | Retrieve SST wastes from the C-Farm, S-102, S-105, and S-109 tanks, starting after the dates given below, when DST space becomes available, retrieving at the rates derived using the minimum durations in **Error! Reference source not found.**, and proceeding as the available DST space and model logic allows:[16]<br><br>Source Tank / Receiver Tank / Start Date<br>C-108 / AN-106 / 12/20/2006<br>C-109 / AN-106 / TBD[17]<br>S-102 / / 10/1/2008<br>C-104 / AN-101 / 3/1/2009<br>S-109 (partial) / SY-101 / FYs 2010 -2011<br>S-109 (partial) / DBVS / FYs 2011 -2013<br>C-107 / AY-101 / 12/1/2010 | **3.3.2 Near Term SST Retrieval Sequencing (through 2018)** |

[16] These dates may be revised to incorporate the latest planning information, or in deference to other assumptions (e.g., the dates for the S-105 and S-109 retrievals depend on the operation of the DBVS and BVS).

[17] The retrieval of waste from tank C-109 was started on 6/19/2007. The simulation of the C-108 and C-109 retrievals are simplified within HTWOS to minimize the work required and do not match the actual or planned field activities. The retrievals are modeled as one operation (no stoppages, or breaks with the switching between tanks) with the C-109 retrieval modeled as starting after the C-108 is projected to complete.

**Table C-1. Modeling Assumptions Matrix (53 sheets)**

| Assumption Item Old Header | Value | MDD Reference Section Number |
|---|---|---|
| | C-110 AN-106 1/1/2011<br>C-112 AN-101 TBD<br>S-109 (partial) BVS FYs 2014 -2015<br>C-101 AY-101 TBD<br>C-105 AY-101 TBD<br>C-102 AZ-101 7/1/2015<br>C-111 AN-101 TBD<br>S-105 (partial) BVS FYs 2015 -2017<br>S-105 (partial) SY-102 FYs 2015 -2017<br>S-105 (heel) SY-102 FY 2018 | |
| Long-term retrieval sequence (FY 2019 and beyond) | The life-cycle priorities for sequencing the retrieval of SST waste are to minimize mission duration, by:<br>• Balancing feed to WTP, STP, and TRU<br>• Balancing HLW WTP feed and LAW WTP feed<br>• Providing for incidental blending | **3.3.3 SST Long Term Retrieval Sequence (Beyond 2019)** |
| **A3.4. Waste Retrieval Facilities** | | |
| Waste Retrieval Facility (WRF) Availability Dates | B-Complex WRF: 6/21/2018<br>T-Complex WRF: 6/21/2019<br>Wastes retrieved from tanks in the B or T complexes before the WRFs are available will be at lower insoluble solids loadings as defined in the Retrieved | **3.3.4 Waste Retrieval Facilities** |

**Table C-1. Modeling Assumptions Matrix (53 sheets)**

| Assumption Item Old Header | Value | MDD Reference Section Number |
|---|---|---|
| | Waste Composition assumptions (see Section A3.8 of HNF-SD-WM-SP-012, Rev. 6).<br><br>Compliant transfer lines will be constructed to support retrievals from B and T complex before the WRFs are made available; one line for each complex. | |
| **A3.5. SST Farm Upgrades** | | |
| Availability Dates for Tank Farms Upgrades | Any SST farm upgrades needed to support the retrieval of SST waste will be completed and made operational before the retrieval dates projected by the HTWOS model. | **3.3.5 SST Farm Upgrades** |
| **A3.6. Constraints on Simultaneous Retrievals** | | |
| Simultaneous retrieval | The most limiting condition(s) resulting from application of the following constraints:<br>• Retrieval and transfer systems in the northeast (NE) and northwest (NW) quadrants can support a maximum of six simultaneous retrievals in each tank farm and a total of six simultaneous retrievals in each quadrant (after the WRFs are constructed).<br>  ○ NE - B, BX, and BY farms<br>  ○ NW - T, TX, and TY farms<br>• Retrieval and transfer systems in the southwest (SW) quadrants can support a maximum of two simultaneous retrievals in each tank farm and a | **3.3.6 Constraints on Simultaneous Retrieval** |

**Table C-1. Modeling Assumptions Matrix (53 sheets)**

| Assumption Item Old Header | Value | MDD Reference Section Number |
|---|---|---|
| | total of two simultaneous retrievals in that quadrant.[18]<br>○ SW - S, SX, and U farms<br>• A maximum of 7 total simultaneous retrievals can be performed at one time. (This assumes that labor resources are available.)<br>• The waste from up to two SSTs may be retrieved to one DST at one time.<br>• The waste from one only SST may be retrieved into one WRF tank at a time.<br>• These constraints also apply to retrievals going directly from SSTs to supplemental treatment processes. | |
| **A3.7. Retrieval Rates** | | |
| SST Waste Retrieval Rates | The SST waste retrieval rates are based on the retrieval technology that is planned to be used for each tank. **Error! Reference source not found.** identifies the assigned retrieval technology and the minimum retrieval duration based on the assigned technology. The HTWOS model determines an average retrieval rate based on the initial inventory and the minimum retrieval duration. The minimum retrieval durations in **Error! Reference source not found.** were taken from SVF-1283, Rev. 2, "Single-Shell_Tank_Retrieval_Assumptions_<br>for_Mission_Modeling_SVF-1283_<br>Rev_2.xls." | **3.3.7 Retrieval Rates** |

[18] The number of simultaneous retrievals in the southeast quadrant (the A, AX, and C Farms) are governed by near-term plans for retrieving waste from those tanks.

**Table C-1. Modeling Assumptions Matrix (53 sheets)**

| Assumption Item Old Header | Value | MDD Reference Section Number |
|---|---|---|
| **A3.8. Retrieved Waste Volume & Composition** | | |
| Retrieval Solution Requirements | **Error! Reference source not found.** provides an estimate of the as-retrieved volume generated during the retrieval of wastes from the various SSTs. The HTWOS model will add water and supernate (for the C-Farm tanks) as needed to generate the as-retrieved volumes, after the application of water-wash factors. [19]<br><br>The bases for the as-retrieved volumes is documented in SVF-1283, Rev. 2. | **3.3.8 Retrieved Solution Requirements** |
| **A3.9. Retrieval Systems** | | |
| Retrieval System Availability | • A sufficient number of retrieval systems are available.<br>• Retrieval systems will be reused when cost effective. | **3.3.9 Retrieval Systems Availability** |
| **A3.10. Single Shell Tank Waste Residuals** | | |
| SST Waste Residuals | • 200 Series SSTs: Best Basis Inventory (BBI) data for tanks where retrieval actions have been completed, when available, or 30 $ft^3$ of "selected phase" as defined in DOE/ORP-2003-02, Inventory and Source Term Data | **3.3.10 SST Residual Waste Inventory** |

[19] The as-retrieved volumes in Table A-3 are based on the capacity and performance of the retrieval systems for the use of the vacuum retrieval system and the mobile retrieval system. The as-retrieved volumes for wastes retrieved using modified sluicing are based on the capacity and performance of the modified sluicing retrieval system or on the volume required to achieve a concentration of 5 molar Na in the liquid phase of the retrieved waste (after the application of water-wash factors), whichever volume is greater. These volumes are based on the recycling of supernates even though the HTWOS model does not explicitly model supernate recycle throughout the whole mission. Supernate recycle is not modeled in HTWOS after the C farm retrievals to simplify the modeling effort.

**Table C-1. Modeling Assumptions Matrix (53 sheets)**

| Assumption Item Old Header | Value | MDD Reference Section Number |
|---|---|---|
| | Package - Environmental Impact Statement for Retrieval, Treatment and Disposal of Tank Waste, and Closure of Single-Shell Tank Waste at the Hanford Site Richland WA, Rev. 0; calculated specifically for the BBI used as model input.<br>• 100 Series SSTs: BBI data for tanks where retrieval actions have been completed, when available, or 360 $ft^3$ of 35 wt% water-washed solids with liquids at ½ the concentration of bulk as-retrieved supernate. Determination of the as-retrieved supernate composition is described in Assumption A3.8. | |
| **A3.11. SST Waste Leaks** | | |
| SST Waste Leaks During Retrieval | No waste is assumed to leak from the SSTs during retrieval. | **3.3.11 SST Waste Leaks** |
| **A4.0. Waste Feed Operations** | | **Section 4.3** |
| **A4.1. Initial Waste Inventory** | | |
| Date that BBI quarterly update was issued | Starting tank inventories represents the contents of the tanks as of 1/1/2007[20] (documented in RPP-33715). This is identified as the "FY 2007" inventory and is based on BBI data downloaded from TWINS in May 2007. Adjustments were made in the HTWOS model for historical transfers through 4/1/2007. | **2.6.1 Initial Waste Inventory** |

[20] Except for tank C-108, which tank has an effective date of 1/2/2007; the tank C-108 inventory is based on a volume measurement taken on January 2, 2007.

**Table C-1. Modeling Assumptions Matrix (53 sheets)**

| Assumption Item Old Header | Value | MDD Reference Section Number |
|---|---|---|
| IMUST waste total volume<br>(retrieved in FYs 2020-2030) | 550 Kgal total[21] | **4.3.12 New Waste Introduced Via Deactivation Table 4-7.** |
| **A4.2. DST Operations** | | |
| **A4.2.1. Sodium Hydroxide Additions** | | |
| Caustic addition for SST Retrievals | Sodium hydroxide and sodium nitrite will be added as needed so that the as-retrieved liquid phase composition satisfies the DST waste chemistry limits given in Table 3-4 of HNF-SD-WM-OCD-015, Rev 17. | **Sodium Hydroxide Additions** |
| **A4.2.2. Flush Volumes** | | |
| | HNF-SD-WM-SP-012, Rev. 6, Table A-21 provides the flush volumes used in the HTWOS model. | **4.3.3 Flush Volumes** |
| **A4.2.3. Minimum DST Level** | | |
| | • Liquids or slurries can be removed down to within 12 inches above the bottom of a DST.<br>• Wastes can be removed down to the bottom of a DST during final cleanout.<br>• Supernatants can be pumped down to within | **C.1.4 4.3.4 Minimum DST Waste Level (Table 4-2)** |

[21] The inventory of the IMUST wastes was originally developed circa FY 2000 using data from WHC-SD-EN-ES-040, Rev. 0 and was compiled in an unverified Excel® spreadsheet that was last revised in July 2002. The $^{235}U$, $^{238}U$, and U(TOTAL) values were revised in FY 2003 (the 2003a HTWOS inventory) as part of a change to avoid double-counting U [i.e., dropping the use of the U(TOTAL) values]. Radionuclide values were adjusted for this inventory by decaying from April 1, 1992 (the reference decay date for the data in the unverified spreadsheet) to January 1, 2004. Excel® is a registered trademark of Microsoft Corporation, Redmond, Washington.

**Table C-1. Modeling Assumptions Matrix (53 sheets)**

| Assumption Item Old Header | Value | MDD Reference Section Number |
|---|---|---|
| | 10 inches of a settled solids layer.<br>• SY-101 can only be pumped down to 100 inches (275 Kgal) between now and 1/29/2012. After that date, the transfer pump will be replaced and the waste can be pumped down to 12 inches.<br>• SY-102 can only be pumped down to 200 inches (550 Kgal) until the solids are transferred across the site to AN-104. After the solids are transferred, the waste can be pumped down to within 12 inches.<br>• The AZ/AY farm tanks can be pumped down below 64 inches if the annulus ventilation is shut down. The annulus ventilation will be shut down when necessary to deliver feed to the WTP allowing the waste to be pumped down within 12 inches of the bottom.<br>• TFCOUP, Rev. 6 Table A-22 lists these specifications. | |
| **A4.2.4. Maximum DST Level** | | |
| Maximum DST Levels | The maximum operating liquid levels for the DSTs are given in OSD-T-151-00007, Rev 1, "Operating Specifications for the Double Shell Storage Tanks." In this revision of the operating specifications, the maximum operating level for AP-Farm tanks was increased from 449 inches (1.235 Mgal) to 454 inches (1.2465 Mgal). It is assumed that each AP-Farm tank will successfully pass the in-service leak testing required to utilize this increased operating level. | **4.3.5 Maximum DST Level** |
| **A4.2.5. Tank Solids Level** | | |

**Table C-1. Modeling Assumptions Matrix (53 sheets)**

| Assumption Item Old Header | Value | MDD Reference Section Number |
|---|---|---|
| Solids Settling Endpoint | • Insoluble solids retrieved from C-Farm SSTs can be settled to a solids loading comparable to that in the source SSTs within 2 days of transferring to a DST. [22]<br>• Insoluble solids retrieved from other SSTs and currently in the DST system can be settled to 40-wt% solids within 30 days. | **4.3.6 Tank Settling Endpoint** |
| Solids Management Strategy | • DSTs supporting C-Farm retrieval will be operated with a minimal supernate layer so that they do not become Group A tanks even though they will be filled with significant quantities of solids.[23]<br>• DSTs not supporting C-Farm retrieval are assumed to hold up to 10-wt% bulk solids based on the maximum operating level of each DST. | **4.3.7 Tank Solids Management** |
| **A4.2.6. Tank Space Allocation** | | |
| DST Usage | **WTP Feed Staging tanks:**<br>AN-101, AN-102, AN-103, AN-104, AN-105, AN-107, AP-101, AP-102, AP-103, AP-104, AP-105, AP-106, AP-107, AP-108, AW-101, AY-101, AY-102, AZ-101, and AZ-102<br><br>**WTP Alternative (Back-up) HLW Feed Staging** | **4.3.8 Tank Space Allocation and Table 4-4.** |

[22] This is accomplished in the model by settling to the same bulk solids volume observed in the SSTs or to an adjusted bulk volume based on mass dissolved during retrieval.

[23] There is an underlying assumption that C farm retrieval operations will be controlled in the field to prevent the creation of a buoyant displacement gas release event (BDGRE) safety issue. The HTWOS model has not been configured to evaluate the potential for a BDGRE to occur.

**Table C-1. Modeling Assumptions Matrix (53 sheets)**

| Assumption Item Old Header | Value | MDD Reference Section Number |
|---|---|---|
| | **tanks:**<br>AN-103, AN-104 (cross-site receiver), and AN-105. At the modelers' discretion, other DSTs equipped with dual mixer pumps can be used to store and stage HLW feed.<br>**Slurry Transfer Limitations:**<br>Use AZ, AY, and AN farms, primarily for staging HLW solids. Try to avoid staging solids through AP or AW farms after retrieving the solids currently in those farms.<br>**Supplemental TRU Treatment Process Feed Source and Staging Tanks:**<br>AW-103, AW-105, and SY-102<br>**Supplemental LAW Treatment DST Usage:**<br>**Provide feed directly from S-105 and S-109 to the DBVS and BVS operations.**<br>Provide feed from SY-101 and SY-103 for the WAS and West STP. Then use SY-101 and SY-103 to stage feed to those systems.<br>**Sludge Transfer for Waste Feed Staging:**<br>C Farm solids will be retrieved to tanks AN-101, AN-106, AY-101, and AZ-101. Some of these tanks may require additional equipment for mobilizing and transferring HLW solids into other DSTs for | |

**Table C-1. Modeling Assumptions Matrix (53 sheets)**

| Assumption Item Old Header | Value | MDD Reference Section Number |
|---|---|---|
| | staging to the WTP.<br><br>**In-tank Sr/TRU precipitation**<br>Tank AP-102 will be used to perform in-tank precipitation of Sr and TRU from wastes in tanks AN-102 and AN-107. | |
| Emergency Space and LAW or HLW Waste Return Space<br>• TFC Emergency Space and Emergency Returns from WTP<br>• LAW or HLW Non-Emergency Process Returns from WTP<br>• Contingency space | Emergency Space and Emergency Returns space will be allocated as shown below:<br>• 1.265 Mgal total<br>• None<br>• None | **4.3.9 DST Emergency Space** |
| WTP Returns (to the DST system) | No waste streams or wastewaters are returned to DST system from the WTP. | **4.3.10 WTP Returns** |
| DST Space Allocation Categories[24]<br>• Evaporator Operational Space<br>• Restricted TRU Headspace<br>• Restricted WTP Feed Tank Space<br>• Safety Basis Headspace | • Supports 242-A operation (AW-102, bottoms receiver, and dilute waste receivers, when used)<br>• TRU solids (AW-103 and AW-105)<br>• The WTP Hot Commissioning feed source tank or DSTs while being used to stage WTP feed<br>• Waste has an associated safety issue | **4.3.8 Tank Space Allocation and Table 4-5.** |

[24] See Section C1.3 for a detailed discussion of the DST space allocation categories.

**Table C-1. Modeling Assumptions Matrix (53 sheets)**

| Assumption Item Old Header | Value | MDD Reference Section Number |
|---|---|---|
| **A4.2.7. Feed Segregation and Blending** | | |
| Feed Control List<br><br>• Blend off high-sulfate supernate (FCL Issue # 1, HNF-SD-WM-OCD-015, Rev. 17, Table A-1)<br><br>• Blend off high $^{233}U$ solids (Revised from FCL Issue # 2, HNF-SD-WM-OCD-015, Rev. 17, Table A-1)<br><br>• Prepare and protect hot commissioning feed (FCL Issue # 3, HNF-SD-WM-OCD-015, Rev. 17, Table A-1)<br>• Segregate Envelope C (Revised from FCL Issue # 4, HNF-SD-WM-OCD-015, Rev. 17, Table A-1)<br><br>• Segregate TRU sludge from complexed waste (FCL Issue # 5, HNF-SD-WM-OCD-015, Rev. 17, Table A-1) | Blend or segregate wastes in specific tanks as summarized below:<br><br>• Decant and blend the AZ-102 supernate with supernates containing lower sulfate ($SO_4$) concentrations so that the final [$SO_4$]:[Na] ratio in AZ-102 and in any other tank receiving significant quantities of the high [$SO_4$] supernate will be less than a target level of 0.048 mole $SO_4$/mole Na after blending and any evaporator campaigns are completed. Constrain the blending of AZ-102 supernate to start after 9/30/2012.<br><br>• Blend the solids from C-104 with the solids from C-111 and C-112 in AN-101 so that the resulting ([$U_{fissile}$]/[$U_{total}$]) ratio is less than a target level of 9.4.<br><br>• The HLW and LAW hot commissioning feeds have already been consolidated in AY-102 as of January 2007.<br><br>• Segregate the waste in AN-102 and AN-107 from all other wastes until it has been partially pretreated in DSTs.<br><br>• Do not add to or store additional waste with the insoluble solids currently in AW-103 and AW-105, with the exception that the addition of remote-handled TRU from SY-102 to either tank is permitted. Control the addition of wastes to SY-102 to avoid mixing the TRU | **4.3.11 Feed Segregation and Blending Table 4-6.** |

**Table C-1. Modeling Assumptions Matrix (53 sheets)**

| Assumption Item Old Header | Value | MDD Reference Section Number |
|---|---|---|
| • Reduce WTP hydrogen generation rate by blending (FCL Issue #6, HNF-SD-WM-OCD-015, Rev. 17, Table A-1)<br>• Segregate waste destined for TRU or low-level waste (LLW) packaging (FCL Issue # 7, HNF-SD-WM-OCD-015, Rev. 16-D, Table A-1)<br>• Segregate low-cesium SST waste for supplemental treatment (Revised from FCL Issue # 8, HNF-SD-WM-OCD-015, Rev. 16-D, Table A-1) | solids in SY-102 with the additional wastes.<br>• Blend the HLW solids in C-102 with the solids in AZ-101 to reduce the $H_2$ generation rate.<br>• Do not add to or store additional waste with the insoluble solids currently in AW-103 and AW-105, with the exception that the addition of remote-handled TRU from SY-102 to either tank is permitted. Control the addition of wastes to SY-102 to avoid mixing the TRU solids in SY-102 with additional solids. Additional solids may be settled on top of the TRU solids in SY-102 as long as they are not mixed with the SY-102 solids and the transfer of wastes through SY-102 is controlled to avoid disturbing the TRU sludge layer. Do not transfer contact-handled TRU waste into the DST system. Segregate the remote-handled TRU waste from insoluble non-TRU solids.<br>• Manage the low-curie waste (less than 0.05 Ci/liter $^{137}Cs$ when normalized to 7 M Na) retrieved from tanks S-109 and S-105 to maximize the amount of low-cesium feed that can be made available to supplemental treatment. Keep the low-cesium fraction designated for feed separate from any high-cesium waste. | |
| Waste Blending | There is no deliberate blending of waste to optimize WTP feeds other than the specific blending | **4.3.11 Feed Segregation and Blending.** |

**Table C-1. Modeling Assumptions Matrix (53 sheets)**

| Assumption Item Old Header | Value | MDD Reference Section Number |
|---|---|---|
| | described in the feed controls immediately above.[25] | |
| **A4.2.8. Availability of DST Space** | | |
| DST Integrity | None of the existing DSTs fail and no replacements are required. | **4.3.12 DST Availability** |
| New DSTs | No additional DST capacity is added. | |
| **A4.2.9. Aging Waste Farm Condensates** | | |
| | About 96 Kgal of waste is added each year to tank AY-101 to account for the DST space needed to receive ventilation system condensates collected in vessel AZ-301. | **4.3.15 Aging Waste Farm Condensates** |
| **A4.2.10. Common Use of Transfer Lines** | | |
| | There are no restrictions on the subsequent use of transfer lines based on waste types (HLW, LAW, TRU, and LLW) and chemistries. | **4.3.16 Common Use of Transfer Lines** |

[25] The incidental blending of HLW solid heels occurs as waste is moved into and through the WRFs and the DST system. Incidental blending is relied on to provide benefits such as a significant reduction in HLW glass quantities.

**Table C-1. Modeling Assumptions Matrix (53 sheets)**

| Assumption Item Old Header | Value | MDD Reference Section Number |
|---|---|---|
| **A4.2.11. Waste Transfer Routes** | | |
| Essential Drawings for DST Waste Transfer System | Transfer system constraints are imposed through the near-term SST retrieval plans. | **4.3.17 Waste Transfer Routes** |
| **A4.2.12. Waste Transfer Rates and Timing** | | |
| Cross-site Transfer Rate | • Wastes transferred cross-site through the supernatant line can be transferred at rates between 50 and 60 gallons per minute.<br>• Wastes transferred cross-site through the slurry line can be transferred at rates between 100 and 120 gallons per minute. | **4.3.18 Waste Transfer Rates and Durations, Table 4-8.** |
| SST Retrievals | Wastes retrieved from the SSTs will be retrieved at the capacity of the retrieval system as defined by the minimum durations when DST space is available. | **4.3.18 Waste Transfer Rates and Durations, Table 4-8.** |
| DST Transfer Rate | Wastes can be transferred between DSTs or to the WTP at a rate of 140 gallons per minute (excluding cross-site transfers). | **4.3.18 Waste Transfer Rates and Durations, Table 4-8.** |
| Transfer Durations | Waste transfer durations will be calculated by dividing the total volume being transferred by the transfer rate. | **4.3.18 Waste Transfer Rates and Durations, Table 4-8.** |
| Transfer System Set-up Time | There is a 5-day delay between subsequent uses of transfer routes having common components starting after C-Farm retrievals are complete to account for the closeout of one transfer route and the establishment of another route. | **4.3.18 Waste Transfer Rates and Durations, Table 4-8.** |

**Table C-1. Modeling Assumptions Matrix (53 sheets)**

| Assumption Item Old Header | Value | MDD Reference Section Number |
|---|---|---|
| DST Waste Residuals | 100 gallons having the composition of the last waste contained in the tank.[26] | **4.3.19 DST Residual Waste** |
| **A4.3. 242-A Evaporator** | | **Section 5.3** |
| **A4.3.1. Evaporator Availability** | | |
| 242-A Evaporator Shutdown & Evaporator Availability | The 242-A Evaporator is available through the end of SST retrieval.[27]<br><br>The Evaporator is not available for operation during outages for the upgrades listed below:<br>• 3/5/2008 – 10/27/2008 MCS Upgrades<br>• 3/31/2008 – 11/20/2008 HVAC Supply<br>• 2/1/2009 – 10/30/2009 HVAC Exhaust<br>• 5/19/2010 – 11/5/2010 Leak Detection (Trace Tek)<br>• 2/4/2011 – 2/2/2012 Repair Sanitary Drain, Replace EC-1 Condenser, Install Reboiler-Condensate System, Install Manual Flush Valves-Dip Tubes, Upgrade PB-2 Relief Valves, Replace-Upgrade Flow Indicators, Install Process Condensate Sampling Station | **5.3.1 Evaporator Availability** |

[26] The 100 gallon DST residual volume is a simplifying assumption that has been used in the HTWOS model since 1997, and is not based on any evaluation of DST waste retrieval capability. Use of this value is not meant to imply that the end-of-mission DST retrievals are efficient enough to leave this small of a residual.

[27] An underlying assumption is that 242-A Evaporator will be maintained to be operational through the end of SST retrieval, and that any upgrades needed to keep it operational beyond FY 2012 can be performed without impacting the projected campaign schedule. This is an enabling assumption made in the absence of detailed plans for future upgrades.

**Table C-1. Modeling Assumptions Matrix (53 sheets)**

| Assumption Item Old Header | Value | MDD Reference Section Number |
|---|---|---|
| | and Install Control Valves. | |
| **A4.3.2. Evaporator Operation** | | |
| • Training Volume<br>• Maximum Evaporation Rate<br>• Bottoms Set Point (g/mL)<br>• Feed Staging Duration<br>• Evaporation Goals | • 82 Kgal of water is evaporated to train personnel if the evaporator has not been operated for 11 months. Each training run adds 50 Kgal of water to AW-102.<br>• The lesser of 50 gpm boil-off or 140 gpm feed<br>• 1.43<br>• 3 months minimum<br>• Goal 1: Evaporate retrieved waste as needed to manage DST space until the WTP starts.<br>• Goal 2: Evaporate retrieved waste as needed to concentrate dilute waste to meet the WTP LAW feed specification after the WTP starts. | |
| **A4.3.3. Evaporator Process Chemistry** | | |
| Waste Volume Reduction | • Water is removed until the specific gravity set point is reached (as calculated by algorithms within the model). Recent issues with solids formation in the evaporator are handled as part of the historical transfer data.<br>• The waste volume reduction factor can be calculated using the following equation:<br>$WVR = \frac{(\rho_B - \rho_F)}{(\rho_B - 1)}$<br>Where:<br>$\rho_B$ Evaporator set point (bottoms SpG)<br>$\rho_F$ Specific gravity of evaporator feed | **In Section 5.2 Model Description of 242-A Evaporator.** |
| Process Condensate Composition | • The volume of process condensate will be 1.15 times the waste volume boiled off the feed to | **5.3.6 Process Condensate Volume and splits** |

**Table C-1. Modeling Assumptions Matrix (53 sheets)**

| Assumption Item Old Header | Value | MDD Reference Section Number |
|---|---|---|
| | account for seal water and the vacuum system steam jets.<br>• The composition of process condensate from the 242-A Evaporator will be estimated using the split factors calculated using the following equation:<br>$$SF_i = \frac{1}{\left[1 + \frac{Kp_i}{21{,}579}\left(\frac{(1 - WVR)}{WVR}\right)\right]}$$<br>Where:<br>$SF_i$ split factor for component i; the split factor is the mass or activity of component i in the process condensate to the mass or activity of i in the feed<br>WVR waste volume reduction factor<br>$Kp_i$ 242-A evaporator partition coefficients from RPP-17239; in the case of tritium and water the $Kp_i$ values are equal to the WVR because they partition equally with water. The partition coefficients are provided in TFCOUP, Rev. 6, Table A-29.<br>21,579 a numerical factor accounting for the 15% volume increase and for the ratio of the volume of condensate as a vapor to the volume of condensate as a liquid. | **are discussed in section 5.2 Model Description of 242-A.** |
| Gaseous Effluent | The releases from the condenser to the atmosphere will be estimated using the release factors given in | |

**Table C-1. Modeling Assumptions Matrix (53 sheets)**

| Assumption Item Old Header | Value | MDD Reference Section Number |
|---|---|---|
| | Table A-30 in HNF-SD-WM-SP-012, Rev. 6.[28] | **5.3.7 242-A Atmospheric Releases** |
| **A4.3.4. ETF and LERF** | | |
| Effluent Treatment Facility | • ETF (nor the downstream facilities TEDF/SALDS) capacity does not constrain Tank Farm, supplemental treatment, or WTP operations. The processing rate may be varied at the discretion of the modeler.<br>• The ETF will be modeled as a black box. Overall partitioning of feed into solid waste and treated effluent will be approximated using overall removal efficiencies for the reverse osmosis and ion exchange units (the polisher outlet). The values used are reported in HNF-4573, Appendix A.[29] Table A-31 in HNF-SD-WM-SP-012, Rev. 6 shows how the removal efficiencies found on page APP A-2 of HNF-4573 are applied to the individual radionuclides and chemical species tracked within HTWOS.<br>• About 99.999% of the oxide solids will be removed in the ETF. | **11.3.1 ETF and LERF Capacity**<br>**11.2 Model Design Description**<br>**11.3.2 ETF Partitioning** |
| LERF Capacity | The LERF will be modeled as two basins, each with a 7.8 Mgal volume, used to provide lag storage of liquid effluents from the 242-A Evaporator and the various treatment processes. One will be used to accumulate effluents while the other is used to feed | **11.2 Model Design Description** |

[28] Table D-6 in RPP-17239 was incorrectly cited in the original assumptions.

[29] This ignores the 50% destruction of TOC in the ultraviolet oxidation step.

**Table C-1. Modeling Assumptions Matrix (53 sheets)**

| Assumption Item Old Header | Value | MDD Reference Section Number |
|---|---|---|
| | the ETF. | |
| State-Approved Land Disposal Site (SALDS) | The SALDS will not be modeled explicitly; however, the demand on the SALDS from ETF will be estimated. | **11.2 Model Design Description** |
| **A4.4. Waste Feed Delivery** | | |
| **A4.4.1 Hot Commissioning Feed Delivery Plans** | | |
| LAW Feed Delivery | Deliver the supernate in tank AY-102 as the first LAW batch for hot commissioning of the WTP. | **6.3.1 LAW Hot Commissioning and Ramp-Up** |
| HLW Feed Delivery | Deliver about 90% of the insoluble solids in AY-102 as HLW feed for hot commissioning of the WTP, adding water as needed to mobilize the solids and dilute the feed to meet WTP contract feed specifications. | **6.3.2 HLW Hot Commissioning and Ramp-Up** |
| **A4.4.2. Feed Delivery Plans** | | |
| LAW Feed Delivery Sequence | Provide available feed from the DST system as needed to keep the LAW processes operating. Try to deliver the waste in tank AN-104 early in the sequence to free up AN-104 for use as the cross-site slurry receiver. | **6.3.3 LAW Feed Delivery Sequence** |
| HLW Feed Delivery | Provide available feed from the DST system as needed to keep the HLW processes in the WTP operating. | **6.3.2 HLW Hot Commissioning and Ramp-Up** |
| **A4.4.3. LAW Feed Specifications** | | |

**Table C-1. Modeling Assumptions Matrix (53 sheets)**

| Assumption Item Old Header | Value | MDD Reference Section Number |
|---|---|---|
| | BNI contract (DE-AC27-01RV14136) Specification 7 will be used to assess envelope compliance. | **6.3.4 LAW Feed Specifications** |
| **A4.4.4. LAW Entrained Solids** | | |
| Entrained Solids Quantity | • 0.5 wt% solids are entrained in decanted supernatants.<br>• Supernatant liquids from dissolving salts will entrain the same solids concentration as exists in the tank after dissolution up to a maximum of 2 wt%. | **6.3.5 LAW Entrained Solids** |
| Entrained Solids Composition | Entrained solids have the same composition as the average composition of solids in the tank. | **6.3.5 LAW Entrained Solids** |
| **A4.4.5. HLW Feed Specifications** | | |
| | BNI contract (DE-AC27-01RV14136) Specification 8 will be used to assess envelope compliance. | **6.3.6 HLW Feed Specifications** |
| **A4.4.6. Feed Compliance Verification** | | |
| Compliance Verification Sampling | Staged feed must remain in a DST for 210 days after filling the tank before delivering to the WTP to provide time to complete feed specification compliance sampling and analysis. | **6.3.7 Feed Compliance Verification Sampling** |
| **A5.0. Project Delivery** | | |
| **A5.1. Project Impacts on DST System Availability** | | |

**Table C-1. Modeling Assumptions Matrix (53 sheets)**

| Assumption Item Old Header | Value | MDD Reference Section Number |
|---|---|---|
| N/A | N/A | |
| **A5.2. Feed Staging Tank Upgrades** | | |
| | • The necessary equipment will be available in time to support all planned waste transfers.<br>• The DSTs will need a mixer pump, and, a decant/transfer pump (if solids entrainment is a concern) or a fixed intake transfer pump (if solids entrainment is not a problem). Solids retrieval equipment will be installed in AN-101 and AN-106 to move C-Farm solids into WTP waste feed staging tanks.<br>• The following DSTs have been identified as requiring project work before use as feed staging tanks; AN-101, AN-102, AN-103, AN-104, AN-105, AN-107, AP-101, AP-102, AP-104, AW-101, AY-101, AY-102, AZ-101, and AZ-102 | **4.3.20 DST Upgrades for Feed Staging** |
| **A6.0. HTWOS Model or Data Analysis Assumptions** | | |
| **A6.1. Estimating Waste Compositions** | | **Section 2.6 General HTWOS Model or Data Analysis Assumptions** |
| | Wastes are homogenized when mixed. | **Section 2.6.2 Estimating Waste Compositions** |
| **A6.2. Water Content of Initial Inventory** | | |
| | The water content of initial inventory is determined by calculating a stream density and two total stream masses (including water and excluding water), and then obtaining water content by difference. | **2.6.3 Water Content of Initial Inventory** |

**Table C-1. Modeling Assumptions Matrix (53 sheets)**

| Assumption Item Old Header | Value | MDD Reference Section Number |
|---|---|---|
| **A6.3. Volume of In-Process Streams** | | |
| | Volumes of waste streams are calculated from mass using density correlations for liquids and a fixed particulate density of 3 g/mL for solids. | **2.6.4 Volume of In-Process Streams** |
| **A6.4. Transuranic Content Accounting** | | |
| | TRU quantities for LAW and ILAW are based on Specification 2 and 7 definitions. | **2.6.5 Transuranic Content Accounting** |
| **A6.5. Radionuclide Decay** | | |
| | • The BBI reference decay date of 1/1/2004 is used as the reference decay date in the model.<br>• Radionuclides are decayed to January 1 of the year of delivery for feed specification compliance assessment.<br>• Half-life values for decay calculations are taken from the Chart of Nuclides, 16th Edition. | **2.6.6 Radionuclide Decay** |
| **A6.6. Waste Chemistry and Mass Balances** | | |
| | • Dissolution of solids is predicted by the application of water-wash factors downloaded from the TWINS on 3/7/2007 and by use of the Sr solubility model documented in RPP-21807.<br>• Chemical charges are balanced when washing solids by the adjustment of bound OH- and then by adjustment of $CO_3^{2-}$.<br>• TOC (less oxalate) shall be treated as C.<br>• HTWOS does not account for solids formation. | **2.6.7 Waste Chemistry and Mass Balances** |
| **ILAW Package Production** | | |

**Table C-1. Modeling Assumptions Matrix (53 sheets)**

| Assumption Item Old Header | Value | MDD Reference Section Number |
|---|---|---|
| | ILAW package production rates are based on the glass production rates, glass density, and package fill assumptions. | **2.6.8 ILAW Package Production** |
| **A6.8. IHLW Canister Production** | | |
| | IHLW canister production rates are based on the glass production rates, glass density, and canister fill assumptions. | **2.6.9 IHLW Package Production** |
| **Radionuclide Activity Associated with Product Oxides** | | |
| | To maintain the ability to track the individual radionuclides in the various glass products, the radionuclides in the melter feeds are NOT reacted to oxides (this is acceptable since the mass associated with the “missing” oxygen in the would-be oxides is a small fraction of the total mass).The ability to track explicitly the activity of radionuclides in an oxide compound would be lost if those radionuclides are reacted to form glass oxides in the HTWOS model, | **2.6.10 Radionuclide Activity Associated with Product Oxides** |

**Table C-1. Modeling Assumptions Matrix (53 sheets)**

| Assumption Item Old Header | Value | MDD Reference Section Number |
|---|---|---|

Terms:

| | |
|---|---|
| BBI | Best Basis Inventory |
| BNI | Bechtel National, Inc. |
| CERCLA | Comprehensive Environmental Response, Compensation and Liability Act of 1980 |
| CH-TRU | Contact-handled TRU |
| DST | Double-Shell Tank |
| ETF | Effluent Treatment Facility |
| FCL | Feed Control Limit |
| FY | fiscal year |
| HEPA | high-efficiency particulate air |
| HLW | high-level waste |
| IDF | Integrated Disposal Facility |
| IHLW | immobilized high-level waste |
| ILAW | immobilized low-activity waste |
| IMUST | inactive miscellaneous underground storage tanks |
| LAW | low-activity waste |
| LERF | Liquid Effluent Retention Facility |
| LLW | low-level waste |
| ORP | U.S. Department of Energy, Office of River Protection |
| PFP | Plutonium Finishing Plant |
| PT | Pretreated |
| PUREX | Plutonium-Uranium Extraction Plant |
| RCRA | Resource Conservation and Recovery Act of 1976 |
| RH-TRU | remote-handled TRU |

**Table C-1. Modeling Assumptions Matrix (53 sheets)**

| Assumption Item Old Header | Value | MDD Reference Section Number |
|---|---|---|
| RL | U.S. Department of Energy, Richland Operations Office | |
| SALDS | State-Approved Land Disposal Site | |
| SBS | Submerged Bed Scrubber | |
| SST | Single-Shell Tank | |
| STP | Supplemental Treatment Plant | |
| SWB | Standard Waste Box | |
| TEDF | Treated Effluent Disposal Facility | |
| TFC | Tank Farm Contractor | |
| TOC | total organic carbon | |
| TOE | total operating efficiency | |
| TPA | Tri-Party Agreement (Hanford Federal Facility Agreement and Consent Order) (Ecology et al. 1996) | |
| TRU | transuranic | |
| TWINS | Tank Waste Information Network System | |
| WSCF | Waste Sampling and Characterization Facility | |
| WESF | Waste Encapsulation and Storage Facility | |
| WESP | wet electrostatic precipitator | |
| WIPP | Waste Isolation Pilot Plant (Carlsbad, New Mexico) | |
| WRF | Waste Retrieval Facility | |
| WTP | Waste Treatment and Immobilization Plant | |
| WVRF | waste volume reduction factor | |

# APPENDIX D. WORKSPACE GRAPHICS

## TABLE OF FIGURES

Figure D-1. East Area HTWOS Graphic ..... D-3

Figure D-2. West Area HTWOS Graphics ..... D-4

Figure D-3. Evaporator Logic ..... D-5

Figure D-4. Waste Treatment Overview Workspace ..... D-6

Figure D-5. WTP Pretreatment Workspace ..... D-7

Figure D-6. LAW Melter ..... D-8

Figure D-7. HTWOS Glass Formers Workspace ..... D-9

Figure D-8. LAW Melter Off-Gas ..... D-10

Figure D-9. HLW Melter Workspace ..... D-11

Figure D-10. HLW Melter Off-gas ..... D-12

Figure D-11 HTWOS System PT 550 Effluent Collection ..... D-13

Figure D-12 HTWOS WTP Condensate/Stack Emissions Workspace ..... D-14

Figure D-13 Supplemental TRU Sludge Processing Workspace. ..... D-15

Figure D-14 West Area Demo Supplemental Treatment ..... D-16

Figure D-15 West Area Supplemental Treatment ..... D-17

Figure D-16 East Area Supplemental Treatment ..... D-18

Figure D-17 East Area IPS Workspace ..... D-19

Figure D-18 West Area IPS Workspace ..... D-20

**Figure D-1. East Area HTWOS Graphic**

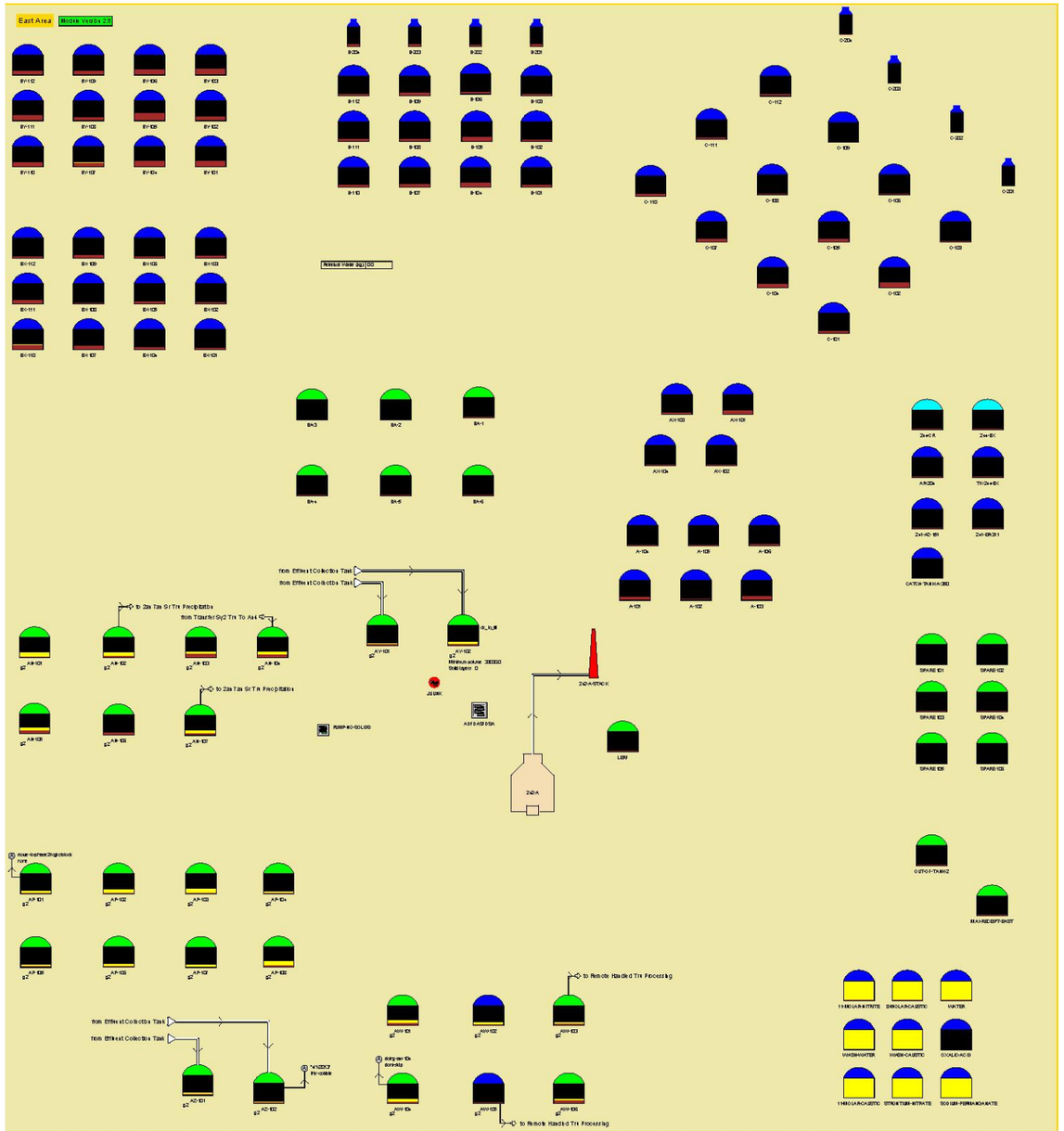

**Figure D-2. West Area HTWOS Graphics**

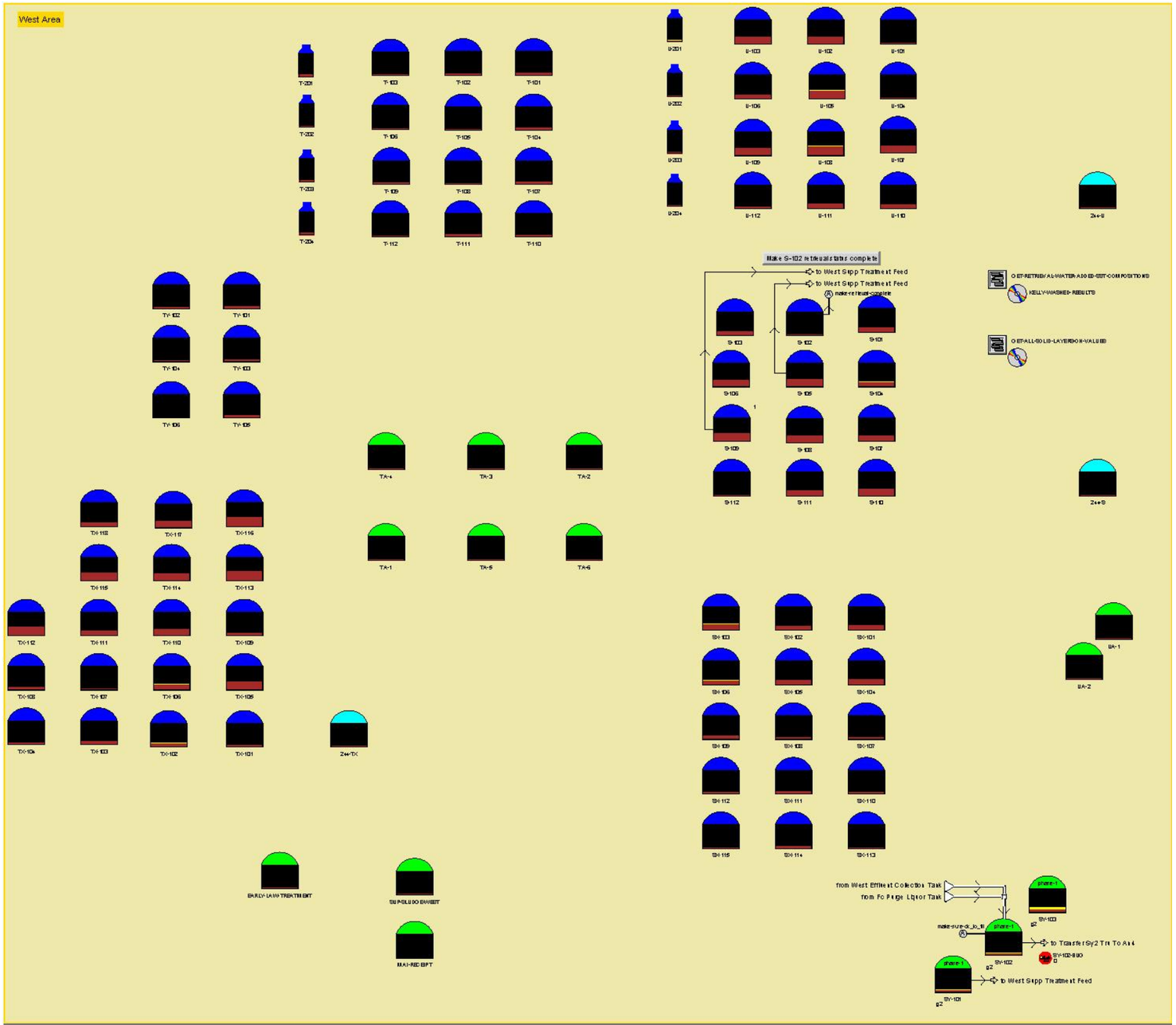

**Figure D-3. Evaporator Logic**

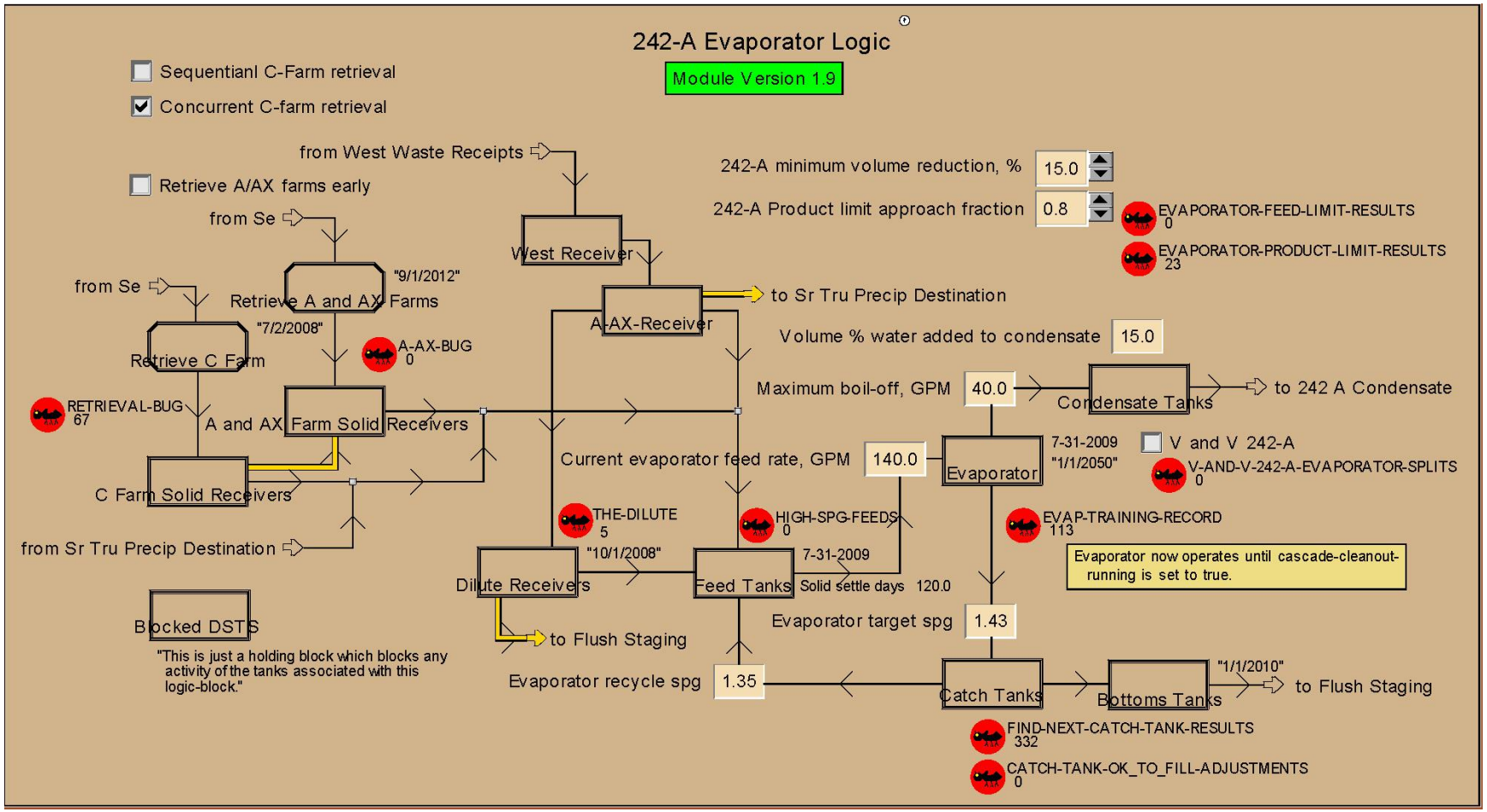

**Figure D-4. Waste Treatment Overview Workspace**

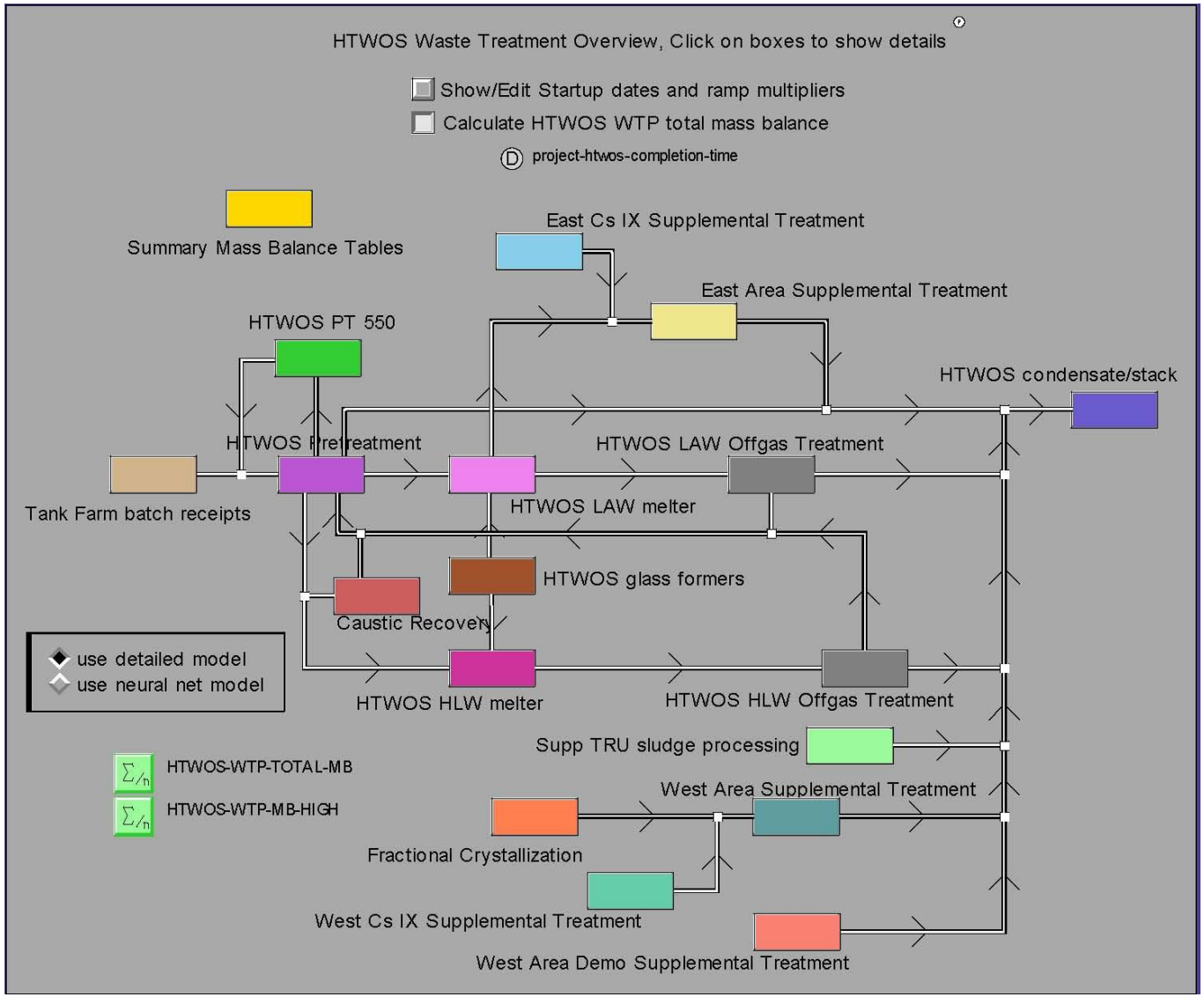

**Figure D-5. WTP Pretreatment Workspace**

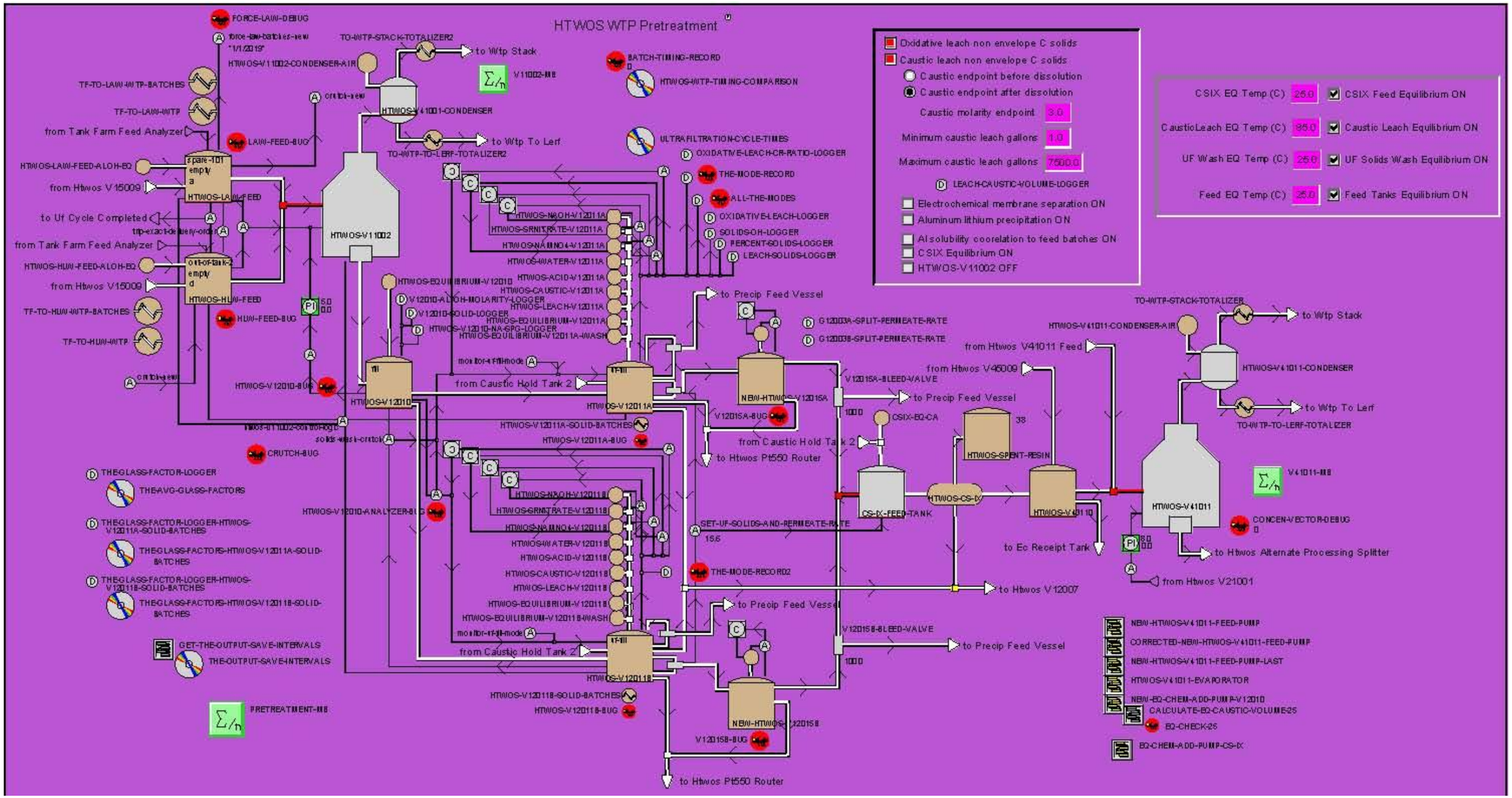

**Figure D-6. LAW Melter**

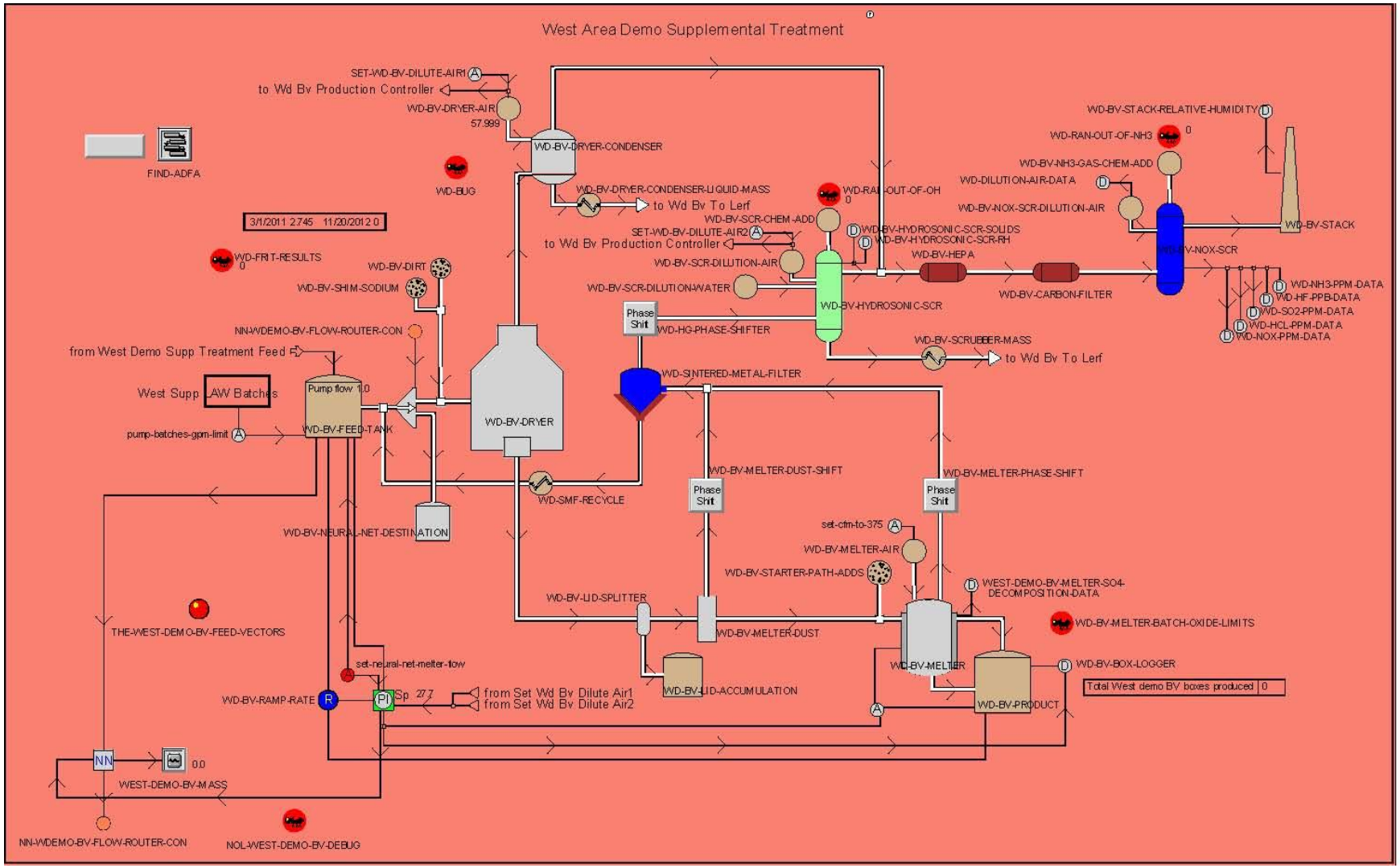

**Figure D-7. HTWOS Glass Formers Workspace**

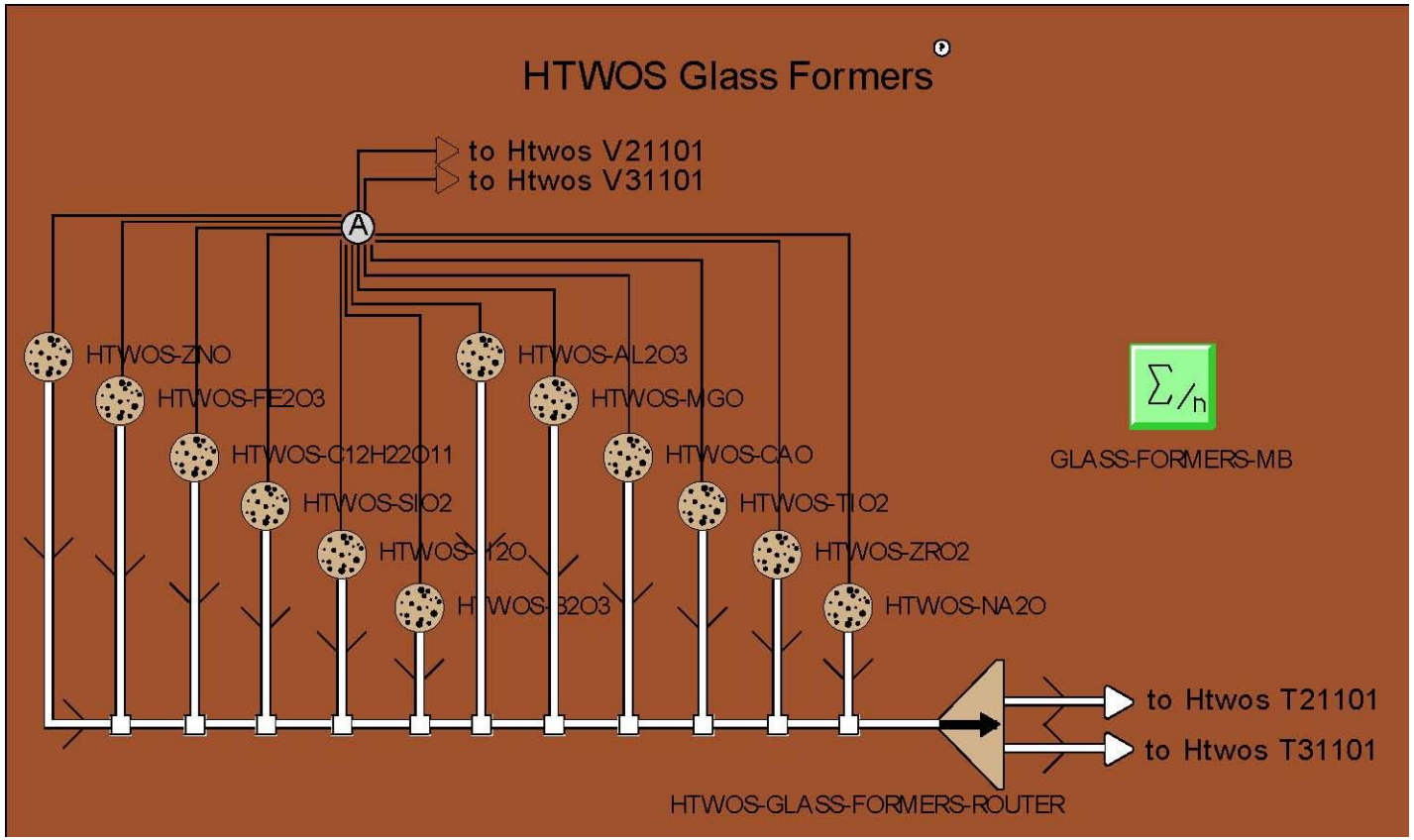

**Figure D-8. LAW Melter Off-Gas**

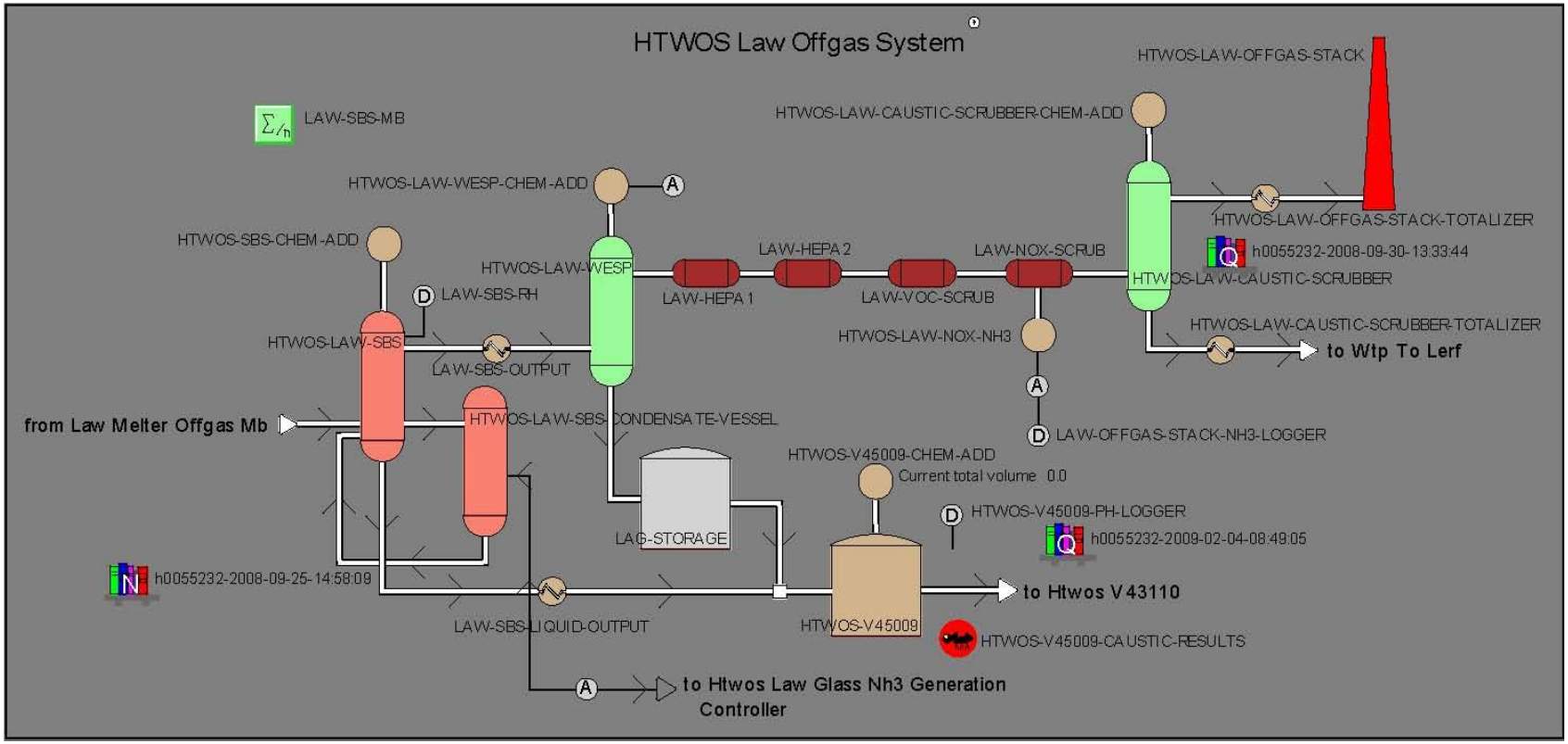

**Figure D-9. HLW Melter Workspace**

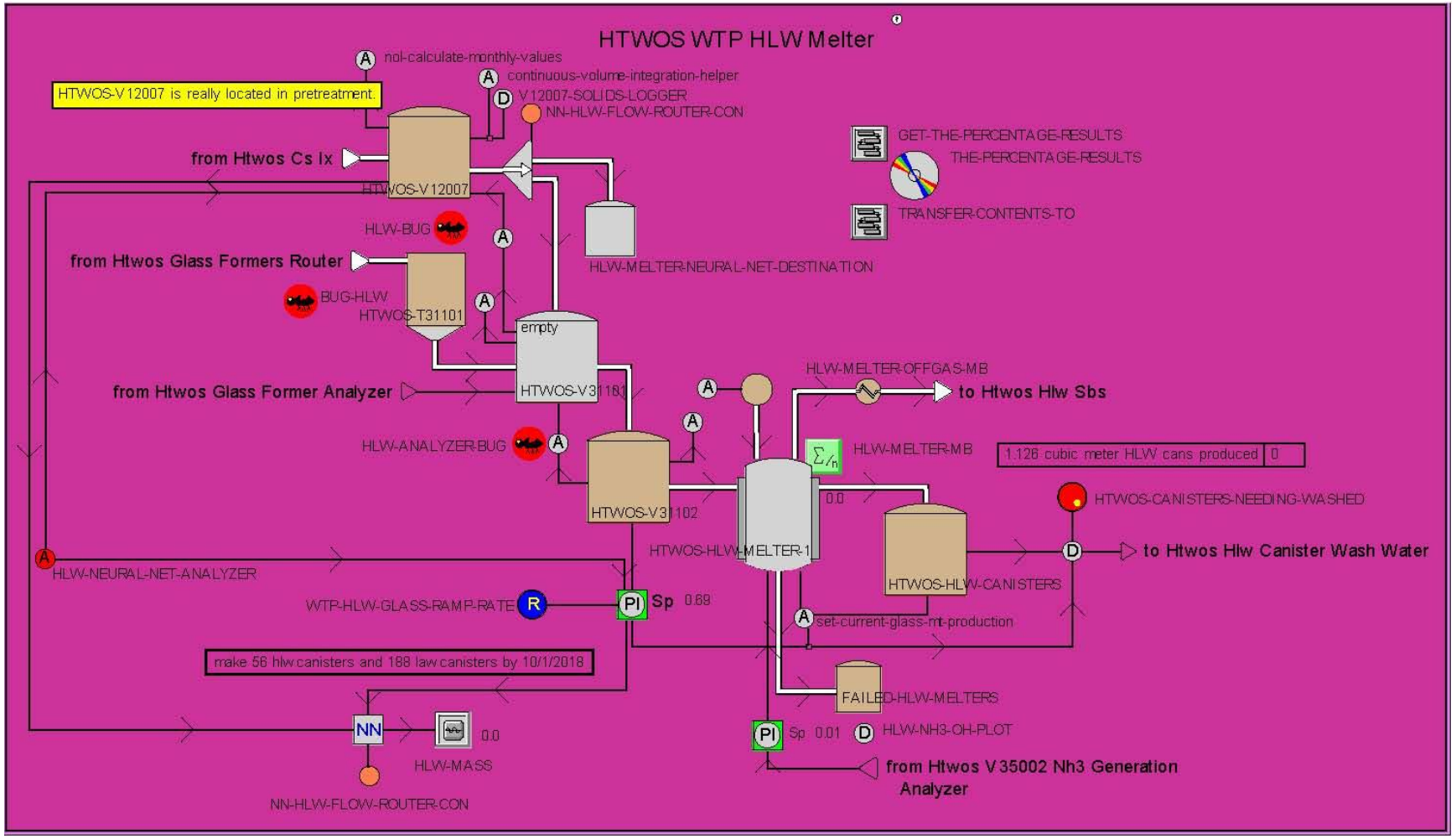

**Figure D-10. HLW Melter Off-gas**

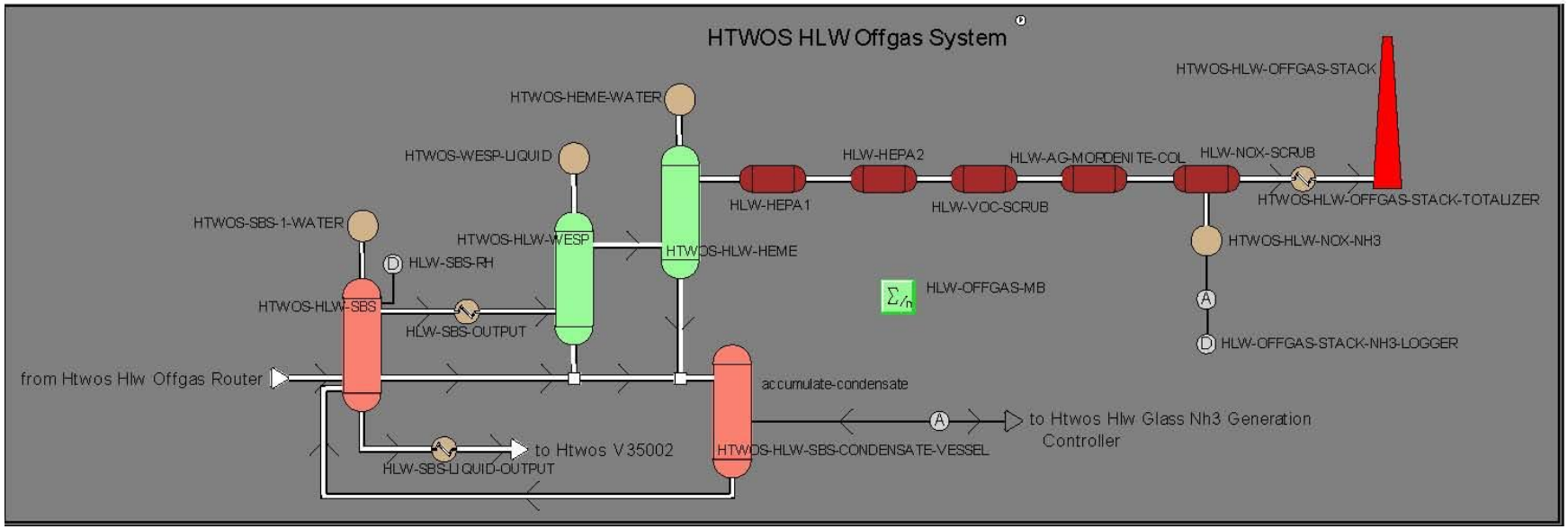

**Figure D-11 HTWOS System PT 550 Effluent Collection**

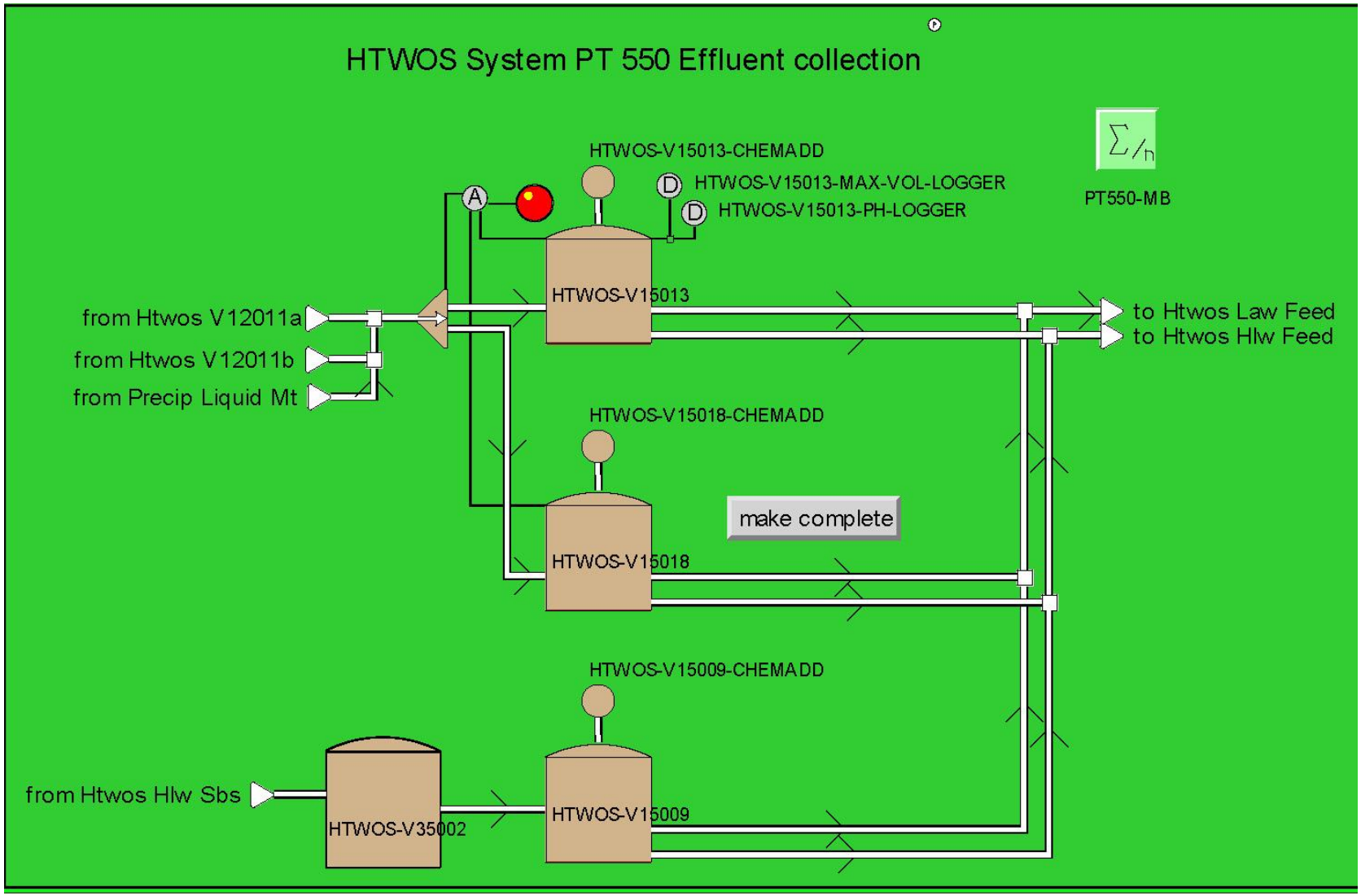

**Figure D-12 HTWOS WTP Condensate/Stack Emissions Workspace**

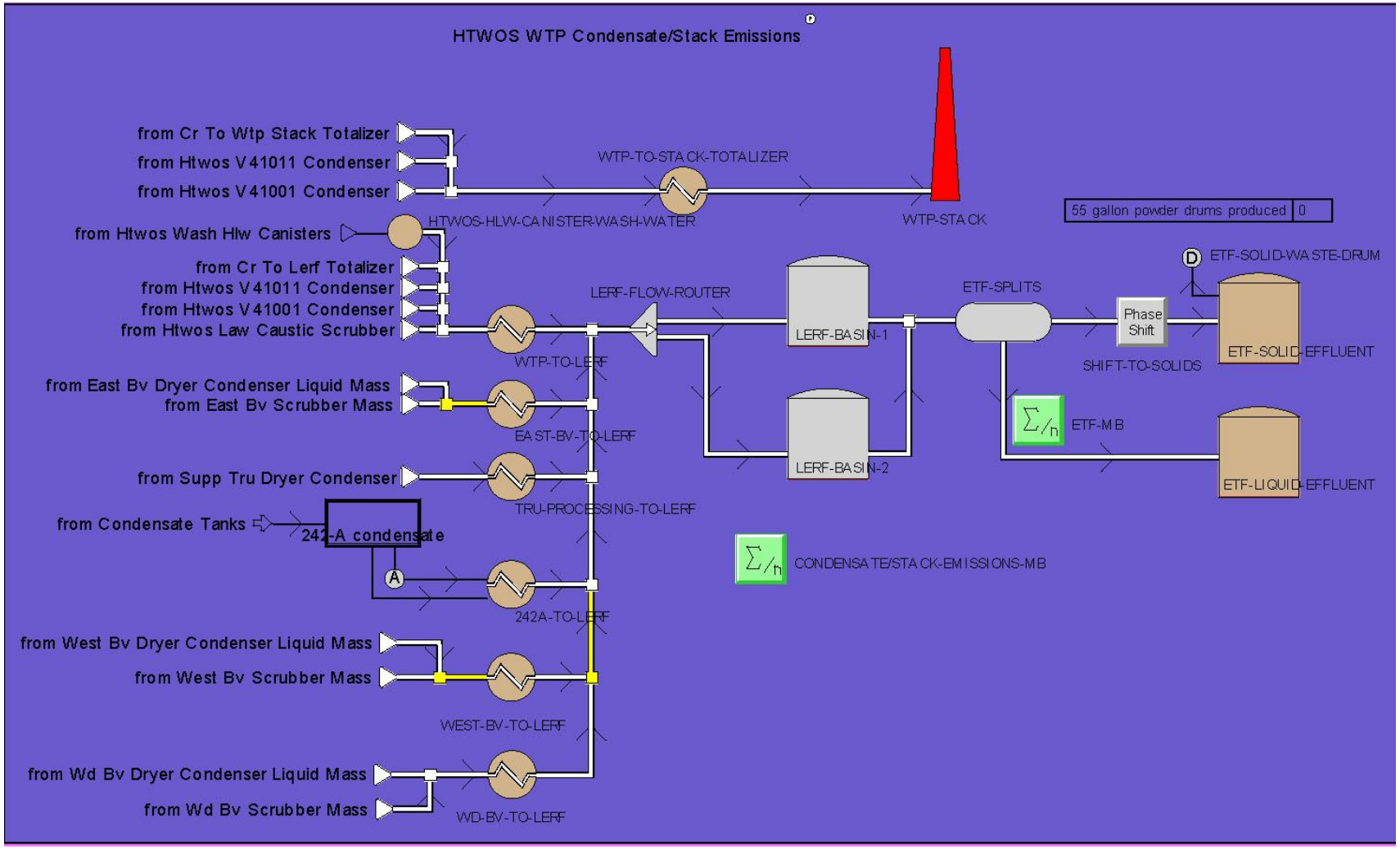

**Figure D-13 Supplemental TRU Sludge Processing Workspace.**

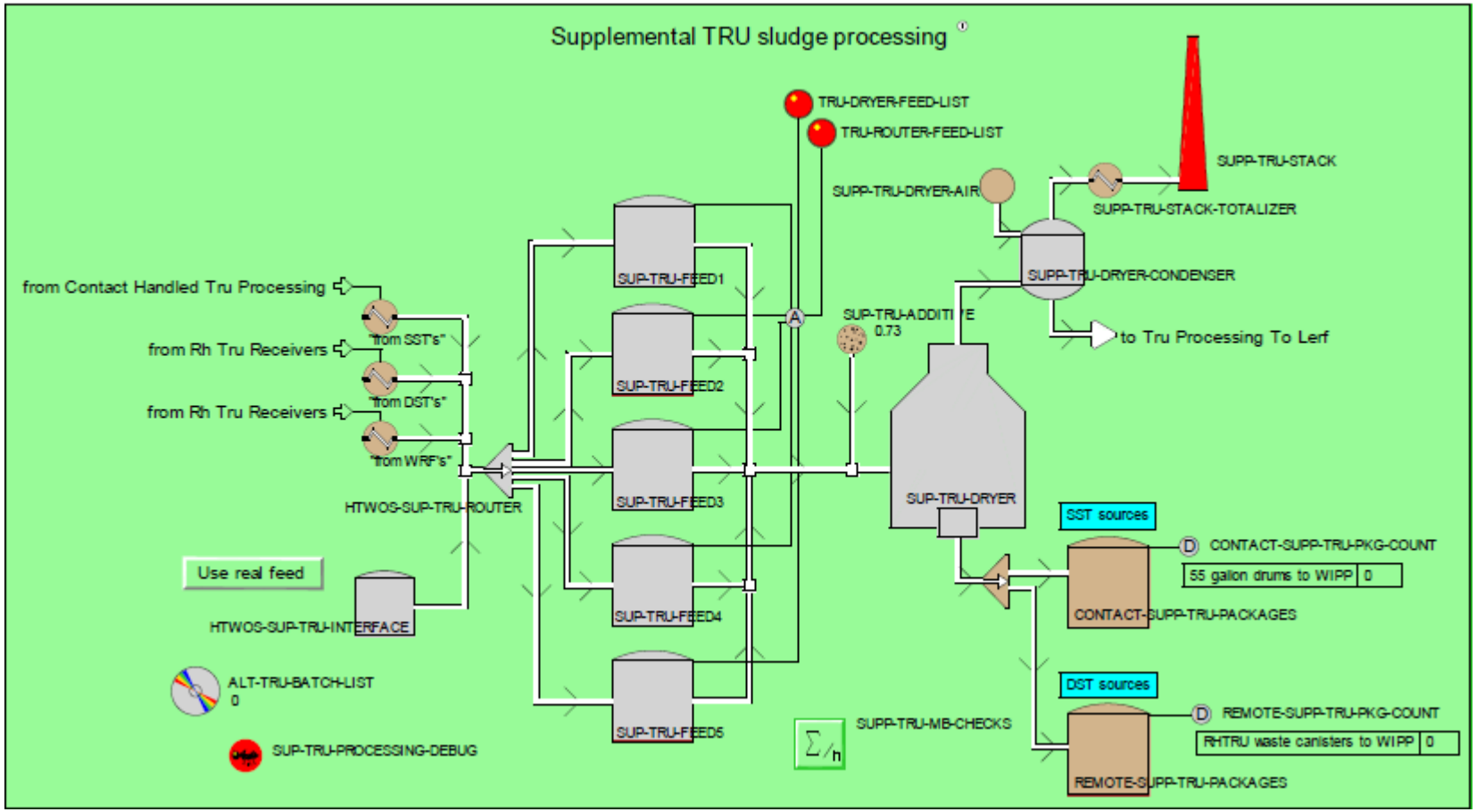

**Figure D-14 West Area Demo Supplemental Treatment**

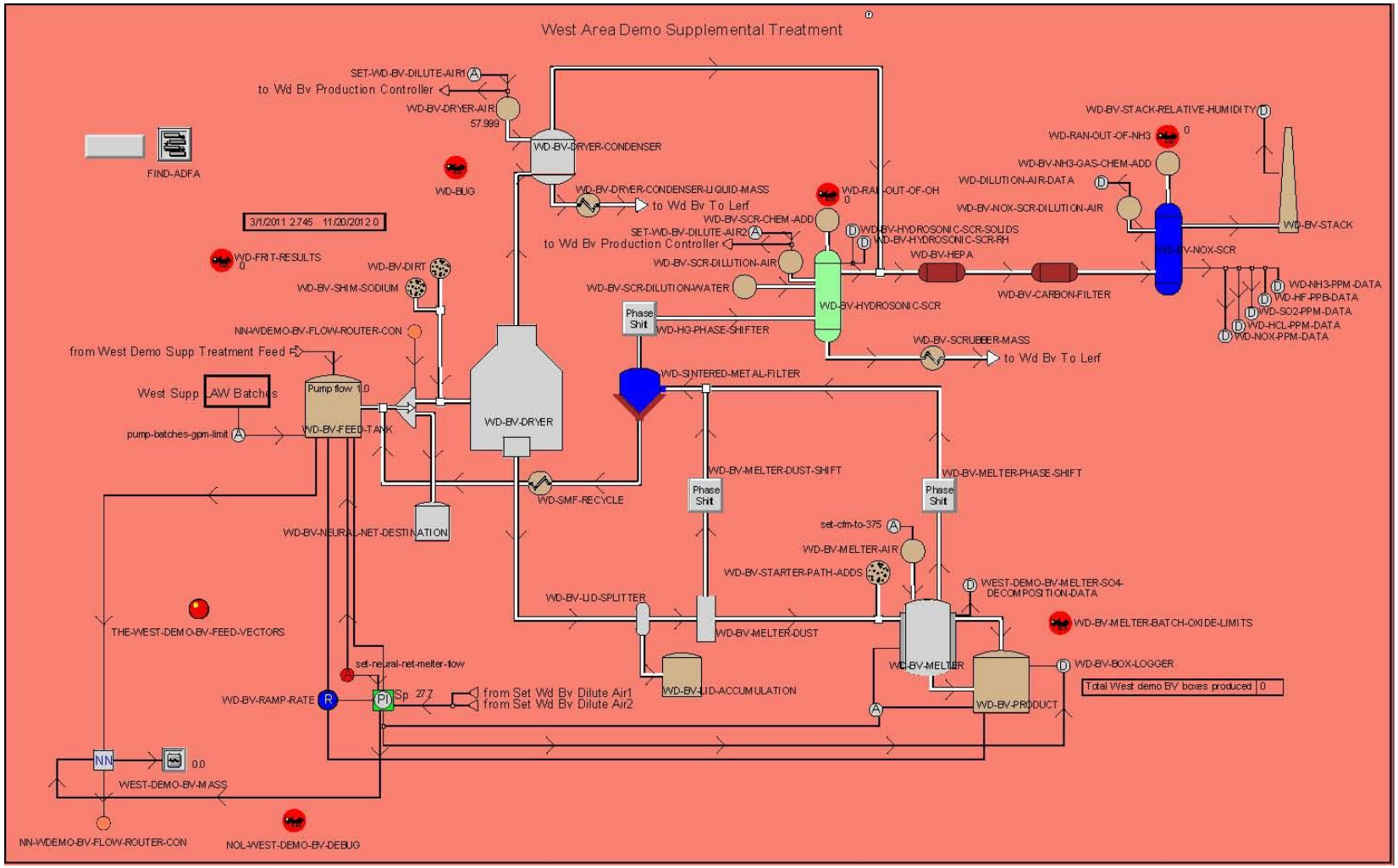

Figure D-15 West Area Supplemental Treatment

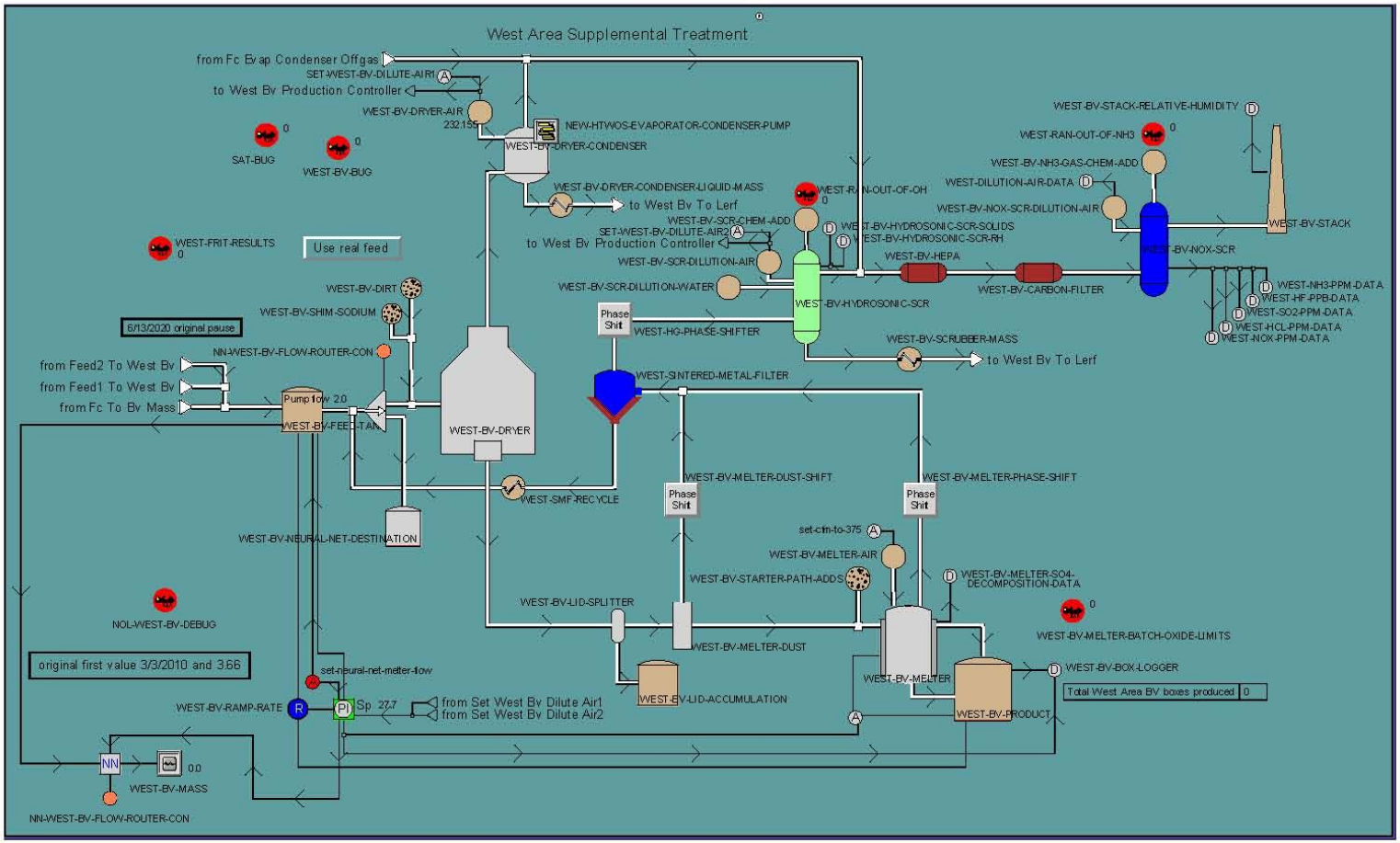

**Figure D-16 East Area Supplemental Treatment**

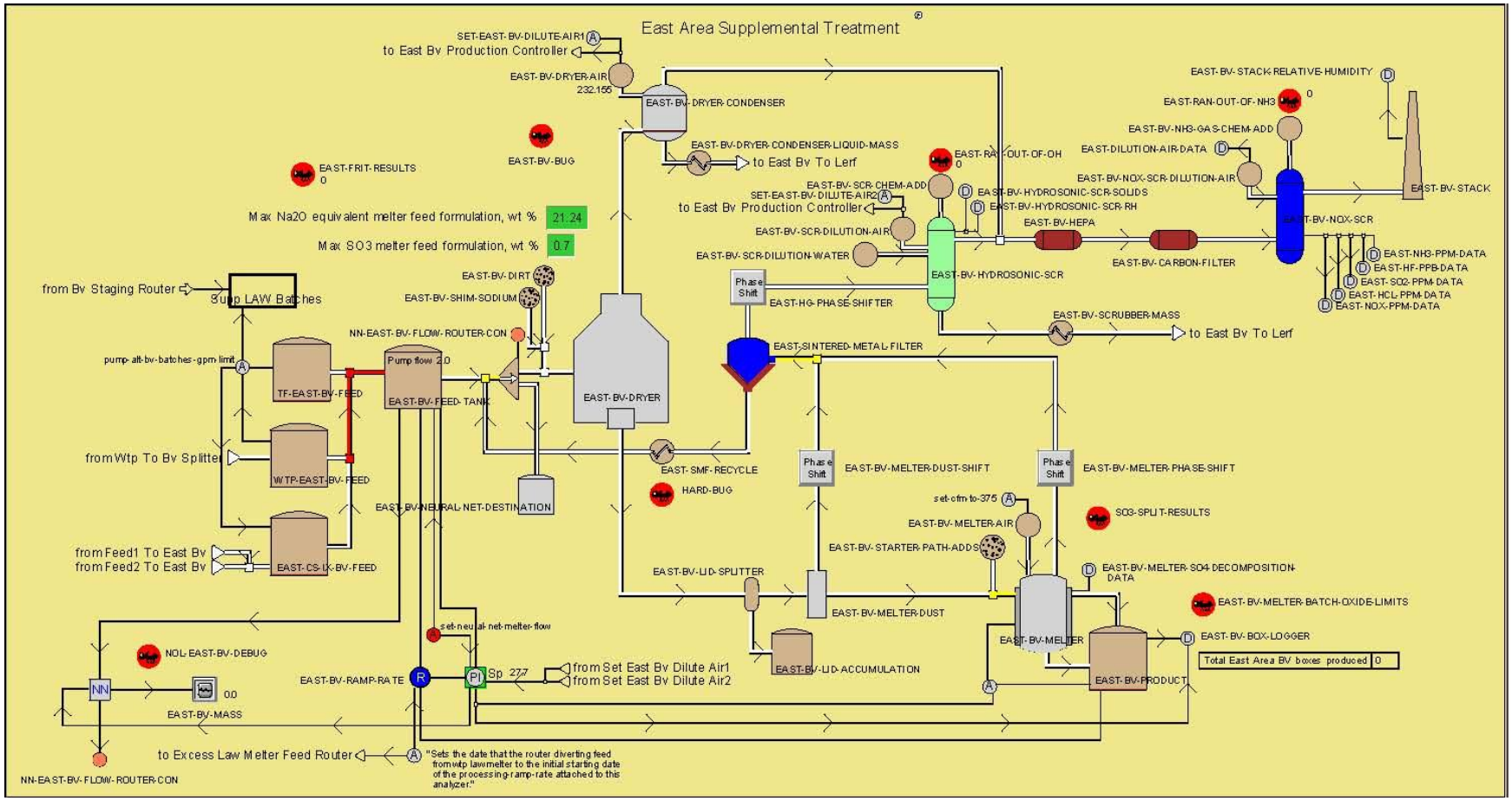

**Figure D-17 East Area IPS Workspace**

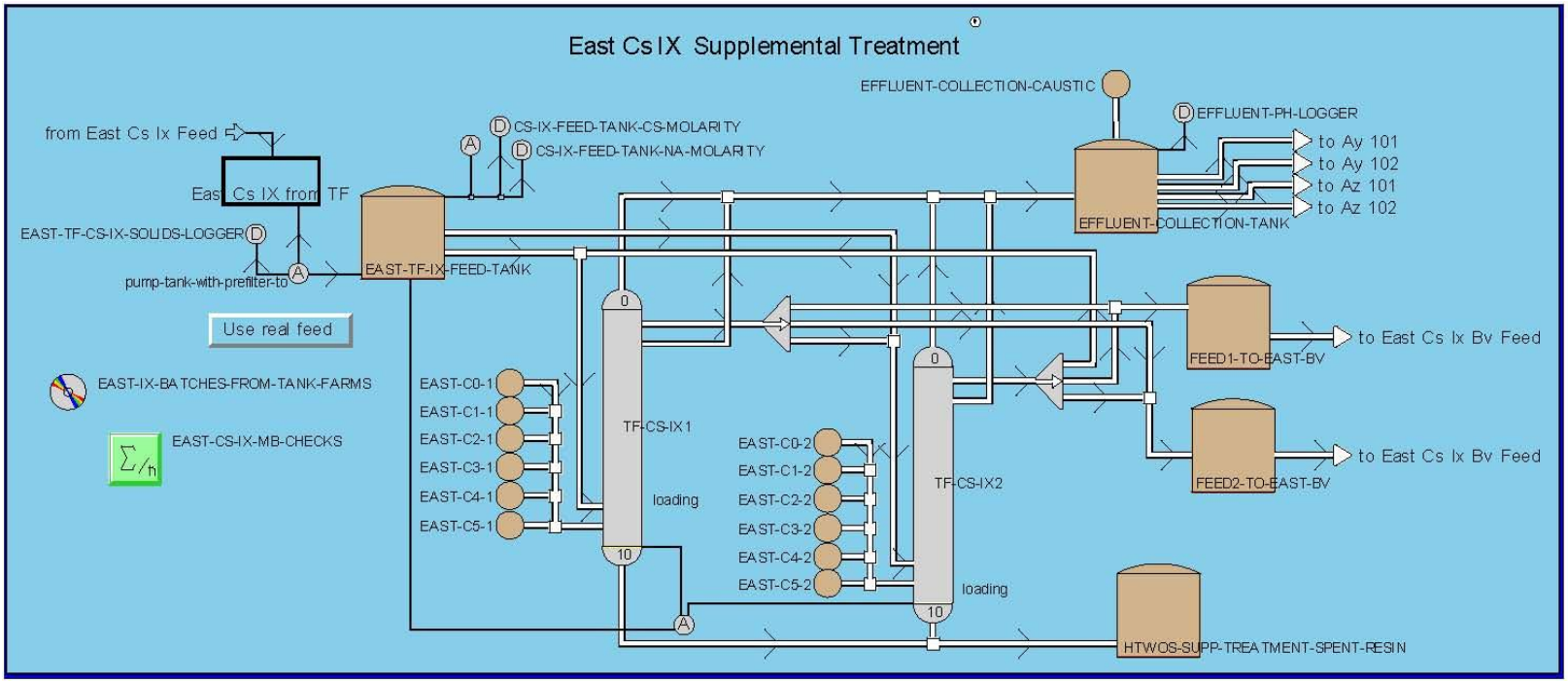
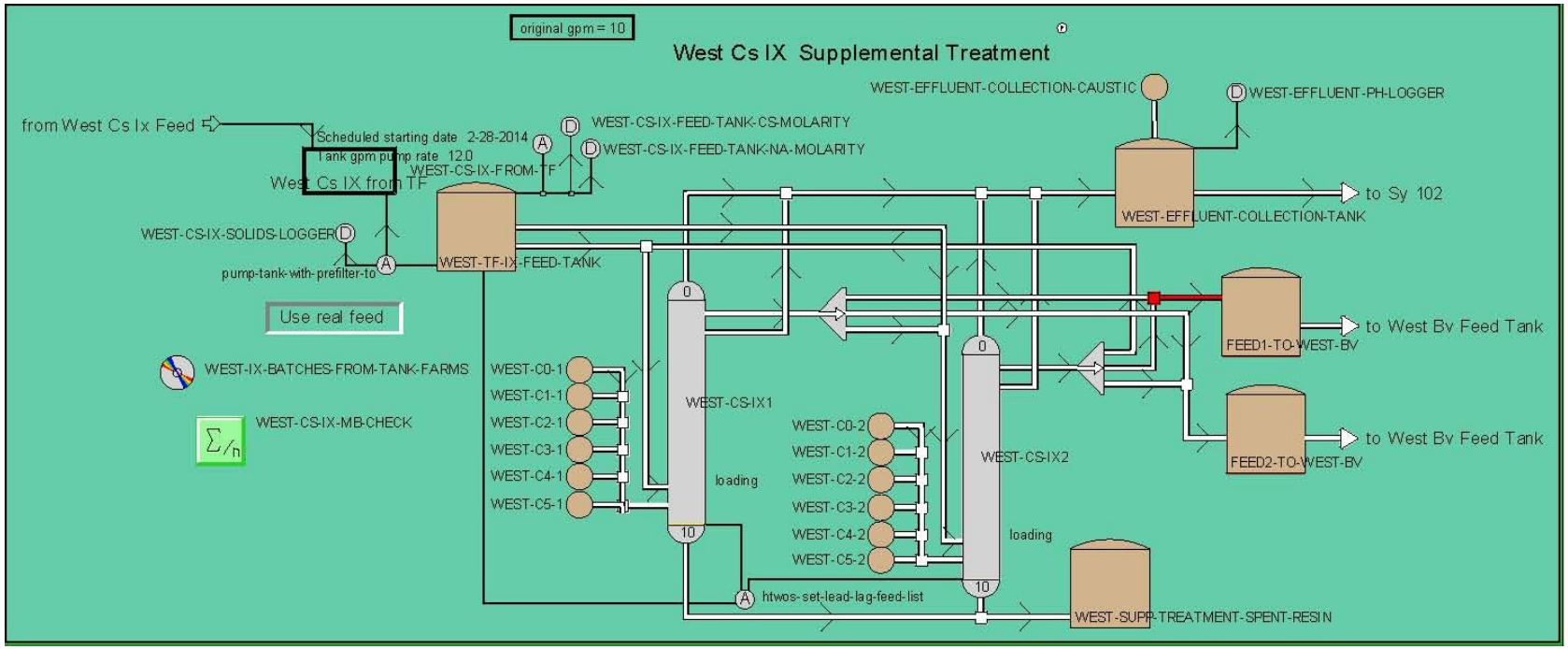
**Figure D-18 West Area IPS Workspace**