START 9613503.2399

0045676

DOE/RL-96-41
Revision 0

Copy No._____

State Waste Discharge Permit Application

Cooling Water and Condensate Discharges

OCT 1996
RECEIVED
EDMC

United States
Department of Energy
Richland, Washington

Approved for Public Release

9615503 2399

TRADEMARK DISCLAIMER

Reference herein to any specific commercial product, process, or service by trade name, trademark, manufacturer, or otherwise, does not necessarily constitute or imply its endorsement, recommendation, or favoring by the United States Government or any agency thereof or its contractors or subcontractors.

This report has been reproduced from the best available copy. Available in paper copy and microfiche.

Available to the U.S. Department of Energy
and its contractors from
Office of Scientific and Technical Information
P.O. Box 62
Oak Ridge, TN 37831
(615) 576-8401

Available to the public from the U.S. Department of Commerce
National Technical Information Service
5285 Port Royal Road
Springfield, VA 22161
(703) 487-4650

Printed in the United States of America

DISCLM-5.CHP (8-91)

9613503.2400

DOE/RL-96-41
Revision 0

UC-630

State Waste Discharge Permit Application

Cooling Water and Condensate Discharges

Date Published
September 1996

United States
Department of Energy
P.O. Box 550
Richland, Washington 99352

Approved for Public Release

FOREWORD

On December 23, 1991, the U.S. Department of Energy, Richland Operations Office, and the Washington State Department of Ecology agreed to adhere to the provisions of Consent Order No. DE 91NM-177 (Ecology, 1991). Consent Order No. DE 91NM-177 lists regulatory milestones for liquid effluent streams on the Hanford Site and requires compliance with the permitting requirements of Washington Administrative Code Chapter 173-216 (*State Waste Discharge Permit Program*) or Chapter 173-218 (*Washington Underground Injection Control Program*) where applicable.

Hanford Site liquid effluent streams discharging to the soil column have been categorized in the Consent Order No. DE 91NM-177 as follows:

- Phase I Streams
- Phase II Streams
- Miscellaneous Streams.

Phase I and Phase II Streams were addressed initially in two reports: *Plan and Schedule to Discontinue Disposal of Contaminated Liquids into the Soil Column at the Hanford Site* (DOE, 1987), and *Annual Status of the Report of the Plan and Schedule to Discontinue Disposal of Contaminated Liquids into the Soil Column at the Hanford Site* (WHC 1988). The actions recommended for the Phase I and II streams in the two reports were incorporated in the *Hanford Federal Facility Agreement and Consent Order* (Ecology, et al. 1996). Miscellaneous Streams are those liquid effluent streams discharged to the ground that are not categorized as Phase I or Phase II Streams.

Miscellaneous Streams discharging to the soil column on the Hanford Site are subject to the requirements of several milestones identified in the Consent Order No. DE 91NM-177. The *Plan and Schedule for Disposition and Regulatory Compliance for Miscellaneous Streams* (DOE/RL, 1994) provides a plan and schedule for the disposition of Miscellaneous Streams to satisfy one requirement of the Consent Order No. DE 91NM-177. The options for disposition of the Miscellaneous Streams have been selected based on demonstrating compliance with the Hanford Federal Facility Agreement, Consent Order DE 91NM-177, Washington Administrative Code, Chapter 173-216, 173-218, and Revised Code of Washington 90.48.

The *Plan and Schedule for Disposition and Regulatory Compliance for Miscellaneous Streams* (DOE/RL, 1994) states that "From the quantitative inventory, a categorical WAC 173-216 permit application will be submitted for cooling water and condensate." This document constitutes the Categorical State Waste Discharge Permit application for cooling water and condensate discharges throughout the Hanford Site.

This page intentionally left blank.

CONTENTS

FOREWORD iii

GLOSSARY vii

METRIC CONVERSION CHART viii

PERMIT APPLICATION Application-1

REFERENCES 2-1

APPENDICES . . . . . App-i
- A GENERAL INFORMATION . . . . . App A-i
- B IDENTIFY WASTE STREAMS . . . . . App B-i
- C SOURCE/WASTE WATER DESCRIPTION . . . . . App C-i

ATTACHMENT 1 IDENTIFIED WASTE STREAMS . . . . . Att 1-i

ATTACHMENT 2 SUPPORTING DATA . . . . . Att 2-i

CONTENTS

Hanford Site Description A-1

FIGURES

A-1. General Hanford Site. A-2

HANFORD SITE DESCRIPTION

This section briefly describes the Hanford Site and provides a general overview.

The Hanford Site covers approximately 560 square miles of semiarid land that is owned by the U.S. Government and managed by the U.S. Department of Energy, Richland Operations Office (DOE-RL). The Hanford Site is located northwest of the city of Richland, Washington (Figure A-1). The city of Richland adjoins the southeastern most portion of the Hanford Site boundary and is the nearest population center.

Activities on the Hanford Site are centralized in numerically designated areas. The 100 Areas, located along the Columbia River, contain deactivated reactors. The processing units are in the 200 Areas, which are on a plateau approximately 7 miles from the Columbia River. The 300 Area, located adjacent to and north of Richland, contains research and development laboratories. The 400 Area, 5 miles northwest of the 300 Area, contains the Fast Flux Test Facility, previously used for testing liquid metal reactor systems. The 600 Area covers all locations not specifically given an area designation. Adjacent to and north of Richland, the 1100 Area contains offices associated with administration, maintenance, transportation, and materials procurement and distribution. The 3000 Area, east of the 1100 Area, contains shops and offices that were used to support construction and engineering functions. Administrative offices also are located in the 700 Area, which is in downtown Richland.

The applicability of this categorical permit application is limited to activities conducted by the DOE-RL and its contractors, and excludes activities conducted by others on lands covered by leases, use permits, easements, and other agreements whereby land is used by parties other than the DOE-RL. For example, this categorical permit application does not cover activities on state owned or leased lands; lands owned by the Bonneville Power Administration; lands leased to the Washington Public Power Supply System, US Ecology, and the Ashe Substation; or similarly leased lands not under the management of the DOE-RL.

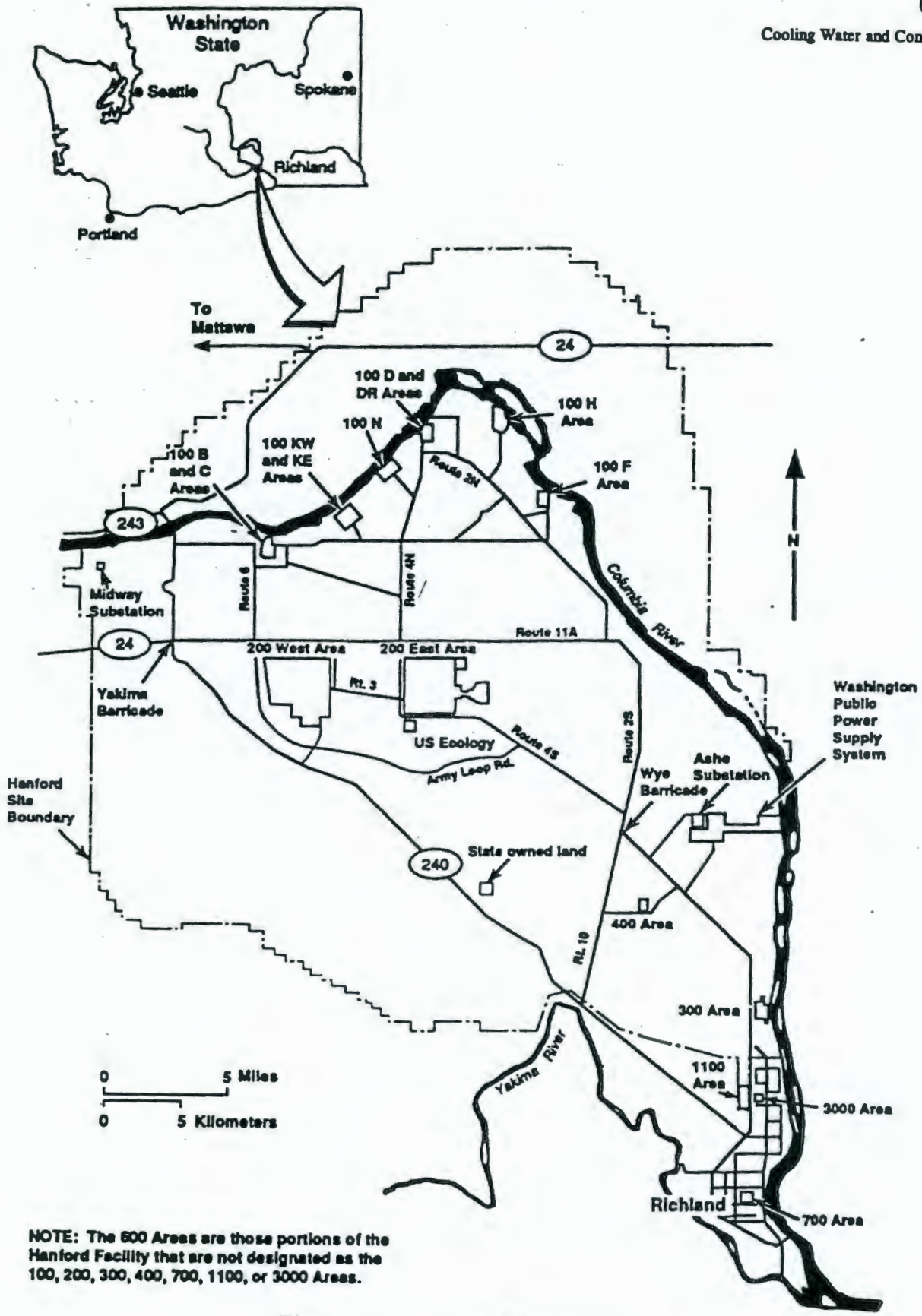

Figure A-1. General Hanford Site.

APPENDIX B

IDENTIFY WASTE STREAMS

CONTENTS

ITEM 1,
ON AN ATTACHED SHEET, BRIEFLY DESCRIBE THE TYPES OF DISCHARGES INCLUDED IN THIS CATEGORICAL PERMIT APPLICATION B-1

1.0 WASTE WATER DISCHARGES B-1
1.1 Cooling Water Discharges B-1
1.2 Condensate Discharges B-2

2.0 PROCESS DESCRIPTIONS B-5
2.1 Air Compressors B-5
2.1.1 Cooling Water Discharge B-5
2.1.2 Condensate Discharge B-6
2.2 Diesel Engines B-6
2.3 Heating, Ventilation, and Air Conditioning B-7
2.3.1 Heating System B-7
2.3.2 Air Conditioning B-7
2.3.2.1 Cooling Water Discharge B-8
2.3.2.2 Condensate Discharge B-8
2.3.3 Evaporative Cooling B-8
2.4 Ice Machines B-9
2.4.1 Cooling Water Discharge B-9
2.4.2 Condensate Discharge B-9
2.5 Pumps B-9
2.6 Valves B-10
2.7 Water Tanks and Other B-11

ITEM 2,
LIST EACH WASTE STREAM INCLUDED IN THIS CATEGORICAL PERMIT APPLICATION AND ASSIGN EACH WASTE STREAM AN IDENTIFICATION NUMBER B-16

3.0 IDENTIFIED WASTE STREAMS B-16

FIGURES

1-1. Discharges and Associated Processes Covered Under This Categorical SWDP Application. B-4
2-1. Air Compressor B-12
2-2. Engine B-12
2-3. Air Conditioning B-13
2-4. Ice Machine B-13
2-5. Simple Pump B-14
2-6. Pressure Relief Valve B-14
2-7. Control Valve B-15
2-8. Vent Valve B-15

TABLES

3-1. Waste Stream Types Included in this Categorical Permit Application. B-16

This page intentionally left blank.

ITEM 1.

On an attached sheet, briefly describe the types of discharges included in this categorical permit application.

As defined in the plan and schedule (DOE/RL 1994), discharges must meet the following parameters to be covered under this categorical WAC 173-216 permit application:

- <10 gpm averaged annually
- <150 gpm instantaneously
- Meet WAC 173-200 groundwater quality criteria (GWQC). Discharges that are expected to have a contaminant that exceeds the GWQC solely because the source water has a contaminant that exceeds one or more of the GWQC, as identified in Appendix C, Section 5.0, would be deemed to meet the GWQC.

The waste water discharges have been subdivided into process-related activities and are described in Sections 1.0 through 3.0. Waste water generated from cooling water and condensate processes not described in these sections are included in this permit application if the permit parameters listed previously are met. The source water used in these activities is either raw Columbia River water, potable water, or groundwater. Detailed source water descriptions are provided in Appendix C, Section 4.0.

1.0 WASTE WATER DISCHARGES

This categorical permit contains two primary classifications of waste water discharges: cooling water and condensate. Per the plan and schedule, pump leak water and valve waste water discharges also are included in this categorical permit (DOE/RL 1994). A variety of cooling water and condensate discharges are generated on the Hanford Site. Figure 1-1 illustrates types of cooling water and condensate discharges on the Hanford Site and the processes that generate each type of discharge. This section provides a description of the processes generating such waste water streams.

1.1 Cooling Water Discharges

Many heat generating systems use water to cool parts of the equipment. This can be a contact or a non-contact cooling system. In a contact cooling system, the water is added directly to the parts and/or materials that require cooling. The used water potentially could become contaminated with oils, solvents, or other materials present in the mechanical parts of the system and must be handled accordingly. Very few contact cooled systems are used on the Hanford Site. Streams discharging from such systems are potentially contaminated

and must be evaluated to determine if they are dangerous wastes. Dangerous wastes are not disposed directly to the environment, and are not included in the scope of this document.

In a non-contact cooling system, the water is contained in a cooling jacket, heat exchanger, or pipeline, which allows heat dissipation but keeps the water from coming into contact with the process equipment and/or materials, and thus prevents contamination. Non-contact cooling water is used throughout the Hanford Site for equipment such as heating, ventilation, and air conditioning (HVAC) systems, air compressors, diesel engines, and ice machines.

Non-contact cooling systems can be categorized as once-through or closed-loop cooling systems. In once-through cooling systems, the discharge does not contact the equipment and would not contain concentrations of contaminants greater than the source water. In a closed-loop cooling system, the same water is recirculated continuously back through the system and no waste water stream is discharged except during maintenance activities.

As depicted in Figure 1-1, other waste water discharges, such as pump leaks, valves and water tank overflows are also included with the cooling water discharge permit application. These waste water streams are generated by equipment that regulates the flow and pressure of source water in lines that supply water to the facilities and/or equipment. The regulating systems include pumps and valves. The water is not protected from contact with the equipment. Although these streams are predominantly of the same quality as source water, they may have low levels of contaminants associated with the discharge.

1.2 Condensate Discharges

Steam is provided to facilities by either the 200 or 300 Area steam plants, or by steam boilers located at the individual facilities. This permit application only covers steam condensate discharges which do not discharge to injection wells. WAC 173-216 permitting of steam condensate streams discharging to injection wells has been deferred indefinitely, per the *Plan and Schedule for Disposition and Regulatory Compliance for Miscellaneous Streams* (DOE/RL 1994), since these streams have been previously registered under WAC 173-218.

Steam is produced from potable water that has been sent through a water softener system to remove minerals (calcium and magnesium) and could be dechlorinated (200 Area plant only). The treated water is introduced into boilers to produce steam. This steam is superheated before distribution to facilities/equipment for both heating and process use.

Steam condensate is formed when there is a temperature differential between the steam temperature and the temperature of ambient air. Steam lines are usually insulated to reduce the amount of steam condensate formed. Steam condensate may be generated in steam lines and HVAC steam heating systems.

Ambient air also is a source for condensation in equipment and systems. As an air stream is cooled, water vapor in the air converts to a liquid form and collects on the surface of equipment and pipes. HVAC air conditioning units and ventilation systems, air compressors, and ice machines generate condensate from ambient air. Condensate formed by these processes must be removed from the systems to avoid operational problems associated with the presence of water.

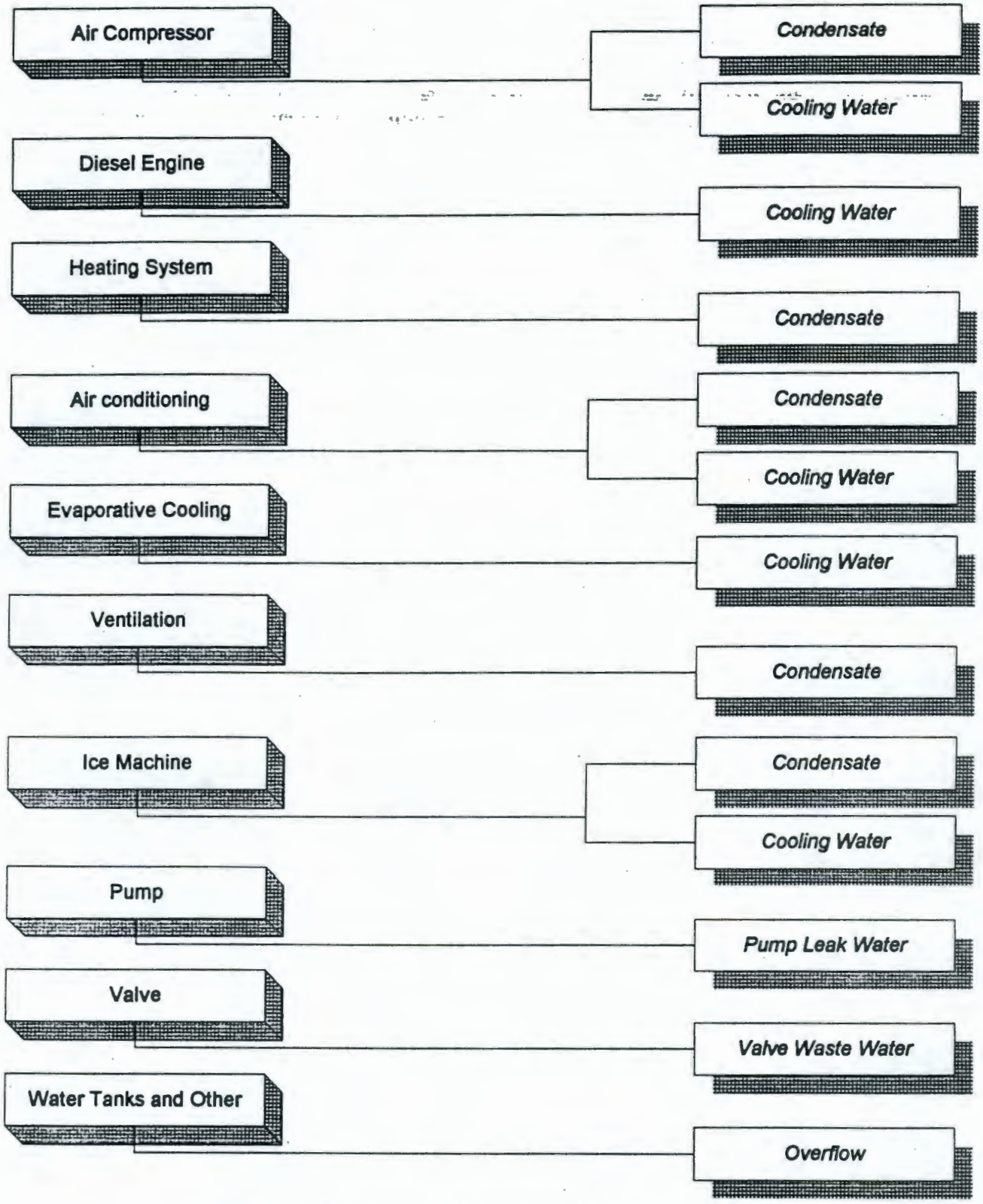

Figure 1-1. Discharges and Associated Processes Covered Under This Categorical SWDP Application.

2.0 PROCESS DESCRIPTIONS

The following sections provide descriptions of the equipment that generate the cooling water and condensate discharges. For each type of equipment, a brief description of the process is discussed and the types of waste water discharges are identified. Additionally, for each possible waste water discharge identified, the following information is provided:

- Source water (i.e., groundwater, surface water, or potable water)
- Potential for contamination to be present
- Stream volume in gallons per minute (gpm) averaged over a one-year period.

2.1 Air Compressors

Air compressors are used throughout the Hanford Site to provide dry compressed air to equipment and/or systems. Normally, compressed air is provided continuously by the compressor, and a backup system is provided to ensure the compressed air source is operational. Figure 2-1 shows an example of a simple air compressor.

When an air stream is compressed, the compression produces large amounts of heat; therefore, the equipment and the air stream leaving the compressor cylinder must be cooled before being used. Many types of compressors use a water-filled cooling jacket to cool the system. Water must be introduced to the jacket to maintain the appropriate temperature on the compressor cylinders, housing, and compressed air. The water discharged from the cooling jacket becomes a waste water stream.

As the air is cooled by the cooling system, the water vapor in the system condenses. A trap located at a receiver tank collects the condensed water and periodically discharges the water as blowdown.

2.1.1 Cooling Water Discharge

The source water used for the cooling jacket is potable water. This type of system is usually a once-through, non-contact system. The waste water generated is the same type of water as the source water, because the cooling systems are separated from the mechanical parts of the compressor. Contact with oils, grease, or other contaminants is not anticipated.

The amount of cooling water discharged depends on the volume of compressed air required by the facility equipment and/or systems. The volume of water discharged by an air compressor can range from 0.01 to 5.0 gpm.

2.1.2 Condensate Discharge

The condensate stream generated is assumed to be essentially potable water, because this steam originates as water vapor contained in ambient air. However, the condensate is in direct contact with the compressor equipment, possibly contaminating the effluent with small quantities of oil.

This source is intermittent and the flow rate depends on the demand for compressed air and the water vapor (relative humidity) present in the intake air. The volume can range from 0.01 gpm to 5.0 gpm depending on the facility.

2.2 Diesel Engines

Diesel engines are used throughout the Hanford Site and are used to provide emergency backup for electrical or steam driven systems in case of energy or operational failure of the primary systems. The use of diesel-run engines guarantees that equipment necessary for the safe operation of the facilities will not be compromised in the event of electrical or steam supply failure.

Specifically, diesel engines are used on a large scale to run generators that supply emergency backup energy to facility-wide equipment and on a smaller scale as the backup driver on individual systems (pump motors) to ensure continuous operation.

Cooling is essential to diesel-fueled systems because only a small portion of the total heat energy of the fuel is converted into useful energy. The remaining heat must be dissipated from the system. A water cooling system often is used to extract excess heat from the engine. A diagram of a simple internal combustion engine is provided in Figure 2-2.

The source water used for the cooling system is either potable water or surface water, depending on the system. If surface water is used, the water must be passed through a series of filters before entering the cooling system.

The cooling system is a once-through, non-contact system that separates the water from the mechanical parts of the engine; therefore, contamination of the waste water prior to discharge.

This stream will be generated only when the backup system is in use, i.e., during emergencies or maintenance activities on the primary system. The volume of waste water produced by this system can be expected to be less than 0.50 gpm.

2.3 Heating, Ventilation, and Air Conditioning

Waste water streams are produced by equipment and/or individual systems within a HVAC system, such as heating system steam traps, air conditioning cooling coils and heat exchangers, evaporative overflow, and ventilation stack demisters.

2.3.1 Heating System

Many of the facilities use steam or steam jackets as a heat source for building heat or for heating tank systems, to maintain the stored material at a constant temperature. As the steam travels through the piping, from the steam plants or boiler into the facility, contact with the cooler pipe and/or equipment surfaces allows the steam to condense. The condensate is discharged from the system through automatic valves, known as steam traps. Condensate may also discharge through manual blowdown valves during startup, in order to quickly fill a heater with steam. The steam trap valve is activated at a predetermined pressure setting, which releases, discharging the condensate in the trap.

The source water for the steam traps is potable water that has been treated before entering the steam producing systems. Steam traps are normally placed in areas where there is no possible contact with hazardous material or the mechanical parts of a system.

The volume of steam condensate is primarily dependent upon several factors including: the quality of steam, the amount of steam being used by the facilities, and the length of the steam distribution line. The amount of steam used varies seasonally, with the maximum occurring in the winter months due to the operation of the building heating systems. Steam condensate streams generated by the transfer lines vary from 0.10 to 0.80 gpm. Streams generated by building heat equipment range from 0.30 to less than 0.10 gpm. Tank steam jackets can be expected to generate approximately 0.05 gpm.

2.3.2 Air Conditioning

In most air conditioning systems, a refrigeration cycle is used to cool the building air. This process uses a compressor and a heat exchanger to cool the incoming air stream. Figure 2-3 is an example of an air conditioning system.

The operation of the compressor generates large amounts of heat, which is dissipated from the system using a once-through, non-contact water cooled heat exchanger, or an air cooled heat exchanger. The cooling coils contain water as the coolant, which is discharged as waste water.

In the refrigeration cycle, the air is cooled within the heat exchanger. As the temperature drops, the air can no longer hold the same amount of water vapor and condensate is formed. This condensate is collected and removed from the system forming a waste water stream.

In some refrigeration systems, the heat exchanger utilizes a refrigerant, or water as a coolant. Closed-loop water based systems may contain ethylene or propylene glycol additives in order to inhibit freezing. Water containing ethylene glycol additives must be handled as a dangerous waste if it becomes necessary to discharge the water. Therefore, it is not included in the scope of this permit.

2.3.2.1 Cooling Water Discharge. The source water for the compressor cooling coils is potable water. This type of system is usually a once-through, non-contact system. The waste water generated will be the same type of water as the source water because the coolant is separated from the mechanical parts of the system. No contamination of the waste water stream is expected.

This cooling stream is seasonal, since the air conditioning system is only used during the warmer summer months. This type of stream is small in volume, expected to produce less than 0.01 gpm.

2.3.2.2 Condensate Discharge. The condensate formed is assumed to be potable water quality, as the condensate originates as water vapor contained in ambient air.

The volume of condensate formed is directly related to the quantity of air being cooled and the amount of water vapor present (relative humidity) in the ambient air. The source is seasonal because air conditioning is required only during the summer months. More condensate will be formed during summers of higher temperatures. As a yearly average, this type of stream can be expected to produce less than 0.01 gpm.

2.3.3 Evaporative Cooling

Another air conditioning system that creates a cooling water stream is the evaporative cooling system. This system uses the cooling effect of evaporating water to cool a recirculating water stream, which in turn cools an air stream via a heat exchanger. Because of the evaporation process, large concentrations of dissolved solids may collect in the system and mix with the incoming source water. A small amount of the water containing elevated levels of dissolved solids is allowed to overflow, avoiding problems with precipitation or scaling. The overflow washes out some of the dissolved solids and allows more source water to enter the system. This dilutes the system water, lowering the concentration of dissolved solids.

The source water for the cooling system is potable water. The overflow water contains the same constituents found in the source water but at higher concentrations. This cooling stream is seasonal because the air conditioning system is used only during the summer months. This type of stream can be expected to create approximately 0.13 gpm.

2.4 Ice Machines

Ice machines use a refrigerant-air heat exchanger to cool an air stream that is used to cool water to freezing temperatures, and a compressor that changes the refrigerant vapor leaving the evaporator back to a liquid form before re-entering the heat exchanger.

The phase change at the compressor generates large amounts of heat, which is dissipated from the system using cooling coils that utilize water as the cooling medium. The cooling water discharged is considered waste water.

As the air is cooled in the heat exchanger, the air can no longer hold the same amount of water vapor and condensate is formed. This condensate is collected and discharged from the system as a waste water stream. A simple ice machine is shown in Figure 2-4.

2.4.1 Cooling Water Discharge

The source water for the cooling jacket is potable water. The cooling water discharging from the system is the same as the source water because the cooling jacket isolates the water from other mechanical parts of the system. No contamination of the waste water is expected.

The volume generated from this type of stream is expected to be less than approximately 2.0 gpm. The volume depends on the amount of ice being produced and the amount of time the ice machine is operational. The volume could show some seasonal fluctuation because of a greater ice demand in the summer months; however, these fluctuations would be small.

2.4.2 Condensate Discharge

The condensate formed is assumed to be potable water quality, since the condensate originates as water vapor contained in ambient air.

The volume of condensate formed is directly related to the quantity of ice being formed and the amount of water vapor present (relative humidity) in the ambient air. The volume of this type of stream is expected to be less than 2.0 gpm.

2.5 Pumps

Pumps are used throughout the Hanford Site for providing water to a variety of systems and/or equipment. Figure 2-5 diagrams the mechanics of a simple pump.

A pump waste water source can be generated by either the necessary cooling of equipment (i.e., the pump driver) or from leaks caused by preventive maintenance or aging components (packing and/or seals).

Diesel motor driven pumps are used as emergency backup for electrical or steam driven systems in case of operational failure. The use of a diesel-driven system allows operation of the unit even if the primary system failure is caused by a loss of the energy supply. Because the pumps are diesel-fueled, cooling water must be provided to the unit (refer to Section 2.2 for process and discharge descriptions).

Leaks could occur around worn or loosely-fit packings or pump seals. In many cases, the pump packings or seals are made intentionally to fit loose to lengthen the lifetime, thus reducing the cost of frequent changes. However, this also allows for some leakage around the pump packing or seal.

The pump leakage is either groundwater, surface water, or potable water, depending on what source is feeding the pump. The pump leakage water has the potential to come into contact with oils and grease that are used on the pump to maintain proper operation. The volume of a stream generated from pump leakage can be expected to range between 0.01 to less than 1.0 gpm.

2.6 Valves

Water lines use several different types of valves to control the pressure and flow of the water in the lines. Many of these valves produce a water discharge during operation. The following type of valves contribute to the waste water discharges:

- Pressure relief valves. When the pressure exceeds the desired operational limits in a water line, the pressure relief valve will open, allowing water to escape. This reduces the water pressure in the lines back to the desired limits. Figure 2-6 shows an example of a pressure relief valve.

- Control valves. Different types of control valves are used on water lines, but the basic common function is to regulate and/or control the flow of water through the lines. When the valve controls flow from the line to the environment, discharges can occur from control valves due to pressure. Figure 2-7 shows an example of a control valve.

- Vent valves. Vent valves are used on water lines to release air trapped in the lines when the lines are in use, or are placed in service. When water first fills the lines, the valves are left open until the air has been released and water is observed to be draining from the valves. This allows a constant flow of water from the supply lines. Figure 2-8 shows an example of a vent valve.

Pressurized water lines are used onsite for delivering potable water, groundwater, and surface water. The water discharging from the valve is the same type of water supplying the lines. Since the lines are only used for water, no contamination is expected to be present.

However, waste water discharging from these valves may come into contact with trace quantities of oil or grease used to lubricate these valve assemblies.

The amount of water discharged from the valves depends on the type of valves: pressure relief valves are expected to provide a volume less than 0.01 gpm; control valves have an expected volume of 1.0 gpm; and vent valve streams range in volume from 1.0 to less than 0.01 gpm.

2.7 Water Tanks and Other

Potable water stored in high water tanks is allowed to discharge to help eliminate mineral and bacteria buildup within the tanks and to prevent freezing. This water is discharged continuously at low volumes throughout the year. Other discharges that fall within this category include an elevator shaft that has potential to receive water from broken water lines, and quench tank cooling water used to cool carbon and stainless steel.

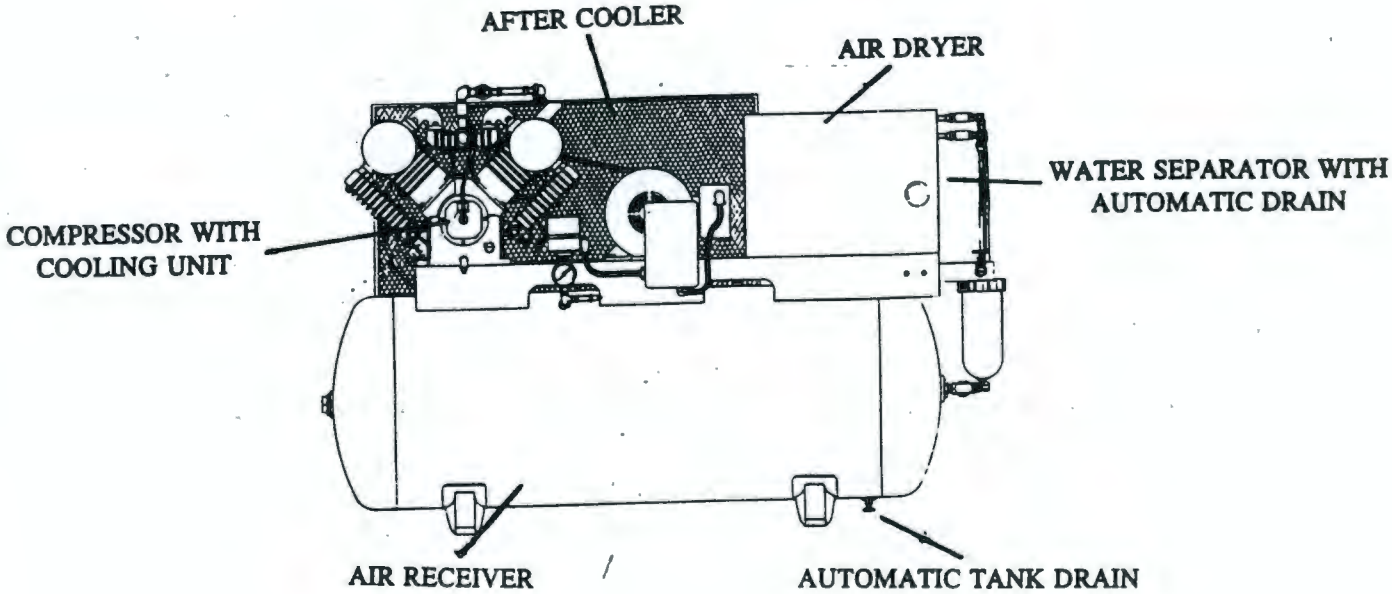

Figure 2-1. Air Compressor.

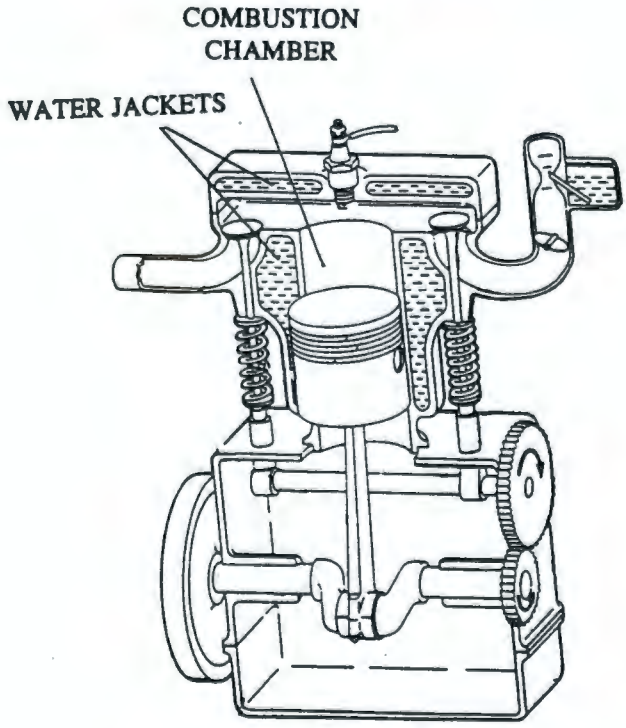

Figure 2-2. Engine.

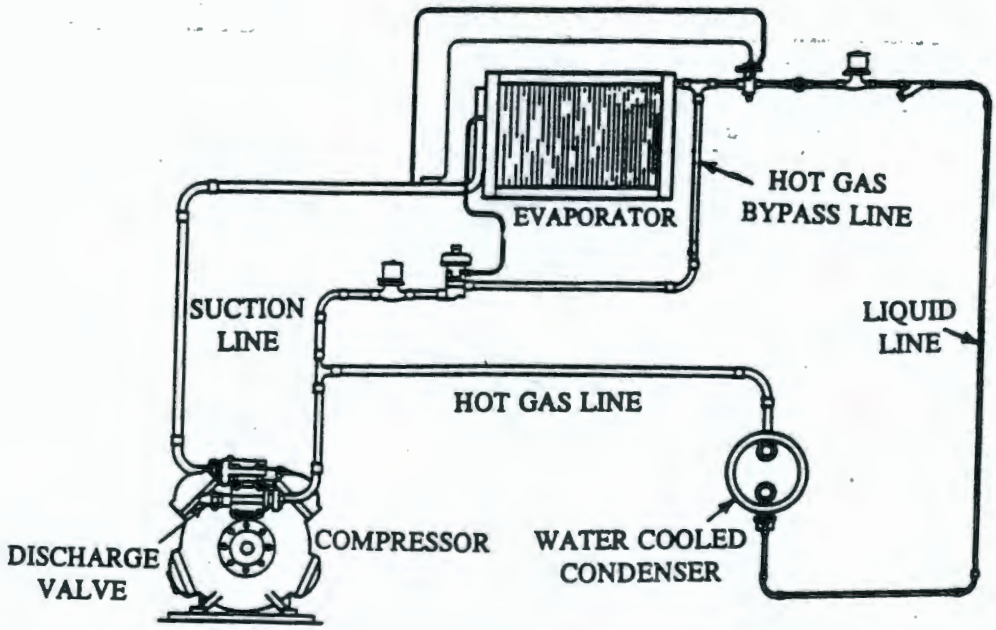

Figure 2-3. Air Conditioning.

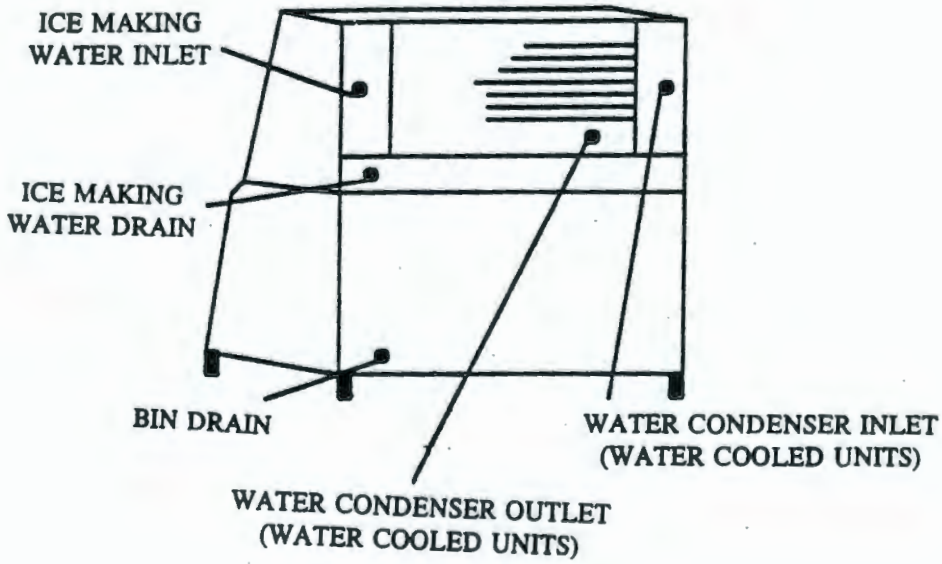

Figure 2-4. Ice Machine.

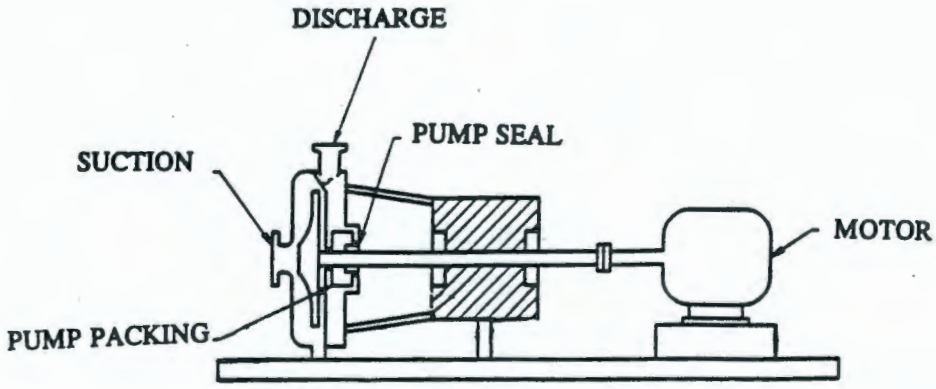

Figure 2-5. Simple Pump.

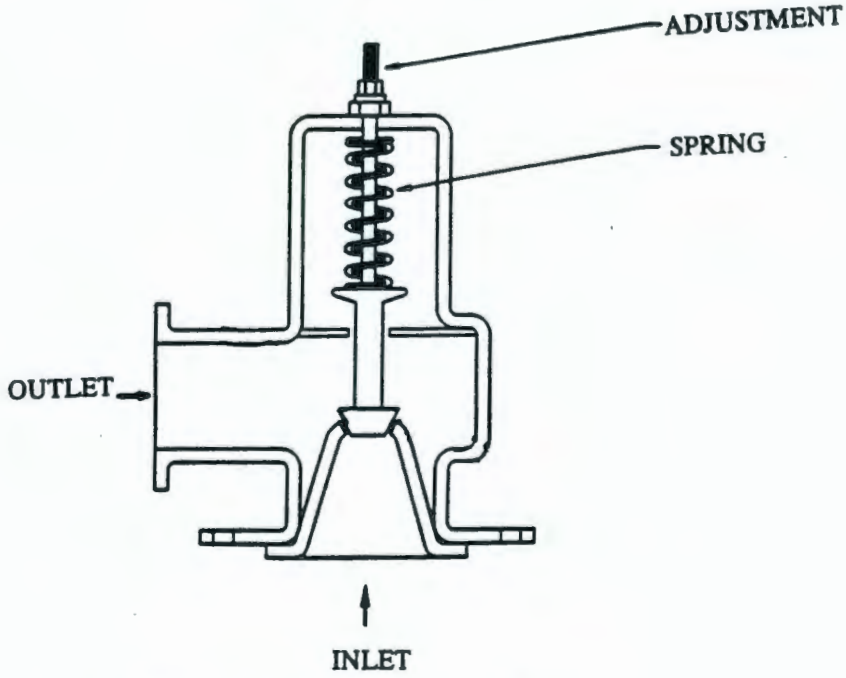

Figure 2-6. Pressure Relief Valve.

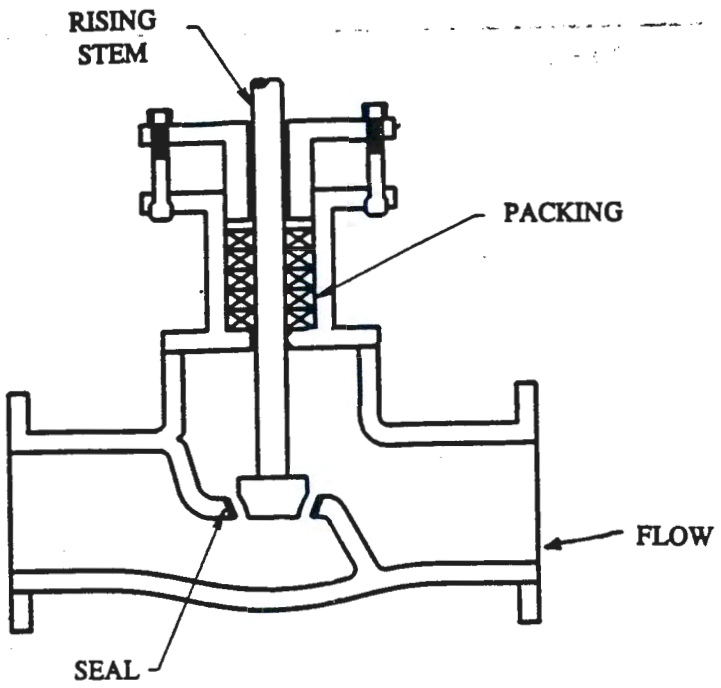

Figure 2-7. Control Valve.

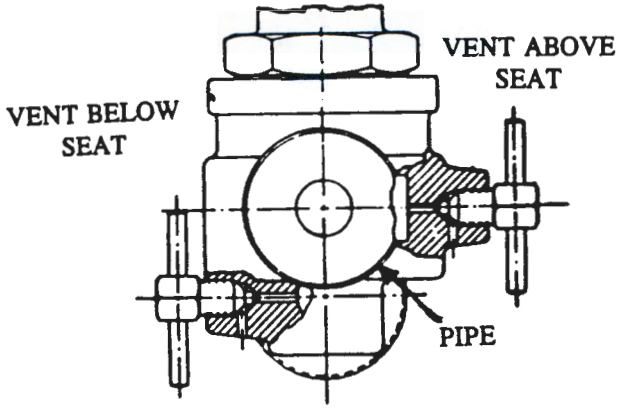

Figure 2-8. Vent Valve.

ITEM 2.

List each waste stream included in this categorical permit application and assign each waste stream an identification number.

3.0 IDENTIFIED WASTE STREAMS

Table 3-1 lists process generating streams included in this permit application. Streams generated from a process described in this permit application and meeting any criteria identified in the final categorical permit, will be included in this permit application. A list of streams currently identified under this permit application is provided in Attachment 1. Ecology will be notified by letter of any additional streams covered by this permit application.

In Table 3-1, the ID Number corresponds to the section of this permit application where the process is described. B/C/S corresponds to batch/continuous/seasonal flow types. Ranges for each stream are provided for the estimated quantity in gpm averaged annually. Based on the current list of streams provided in attachment 1, the combined annual average flow rate is less than 25 gpm.

Table 3-1. Waste Stream Types Included in this Categorical Permit Application.

ID No.	Process	Waste Stream Name/Location	B/C/S Process	Estimated Quantity
2.1	Air Compressors	Cooling Water/Condensate	C	0.01 - 5 gpm
2.2	Engines	Cooling Water	C	<0.5 gpm
2.3	Heating, Ventilation, Air Conditioning	Cooling Water/Condensate	S	<0.01 - 2 gpm
2.4	Ice Machines	Cooling Water/Condensate	S	<0.01 - 2 gpm
2.5	Pumps	Pump Leakage	C	<0.01 - 1 gpm
2.6	Valves	Valve Waste Water	B	<0.01 - 1 gpm
2.7	Water Tanks and Other	Water Tank Overflow	B	<10 gpm

APPENDIX C

SOURCE/WASTE WATER DESCRIPTION

CONTENTS

ITEM 3,
ON AN ATTACHED SHEET, BRIEFLY DESCRIBE ALL SOURCE WATER USED TO GENERATE WASTE STREAMS. ALSO DESCRIBE CONCENTRATIONS MEASURED, ANALYTICAL METHODS, AND DETECTION LIMITS. EXPLAIN INSTANCES WHERE CONSTITUENT LEVELS EXCEED GROUND WATER CRITERIA. C-1

4.0 SOURCE WATER DESCRIPTIONS C-1
4.1 Raw Water from the Columbia River C-1
4.2 Potable Water from the Columbia River C-1
4.3 Potable Water from Groundwater (Well Water) C-1
4.4 Storm Water C-2

5.0 ANALYTICAL RESULTS C-2
5.1 Columbia River Raw Water Data C-3
5.2 Columbia River Potable Water Data C-4
5.3 400 Area Potable Water Data C-4
5.4 400 Area Raw Water Data C-5
5.5 PUREX Steam Condensate C-5

ITEM 4,
PROVIDE ADDITIONAL PROCESS KNOWLEDGE THAT COULD EFFECT CONSTITUENT CONCENTRATIONS C-29

6.0 ADDITIONAL PROCESS KNOWLEDGE C-29

TABLES
Table 5-1. Columbia River Raw Water Data Summary Table C-7
Table 5-2. Columbia River Potable Water Data Summary Table C-13
Table 5-3. 400 Area Potable Water Data Summary Table. C-17
Table 5-4. 400 Area Raw Water Data Summary Table C-21
Table 5-5. Purex Steam Condensate Data Summary Table C-25
Table 6-1. Examples of Processes Affecting Constituent Concentrations C-29

ITEM 3.

On an attached sheet, briefly describe all source water used to generate waste streams. Also describe concentrations measured, analytical methods, and detection limits. Explain instances where constituent levels exceed ground water criteria.

4.0 SOURCE WATER DESCRIPTIONS

There are three types of source water possible for waste streams on the Hanford Site. These types include raw water from the Columbia River, potable water from the treatment of the Columbia River, and both treated and untreated groundwater. These source water types are described in the following sections.

4.1 Raw Water from the Columbia River

Raw water (or surface water) from the Columbia River is pumped from the 100-B, 100-D, 100-K, or 300 Areas. This water has been filtered through a course screen but has not been treated. Data for the raw water from the Columbia River are provided in Table 5-1.

4.2 Potable Water from the Columbia River

Raw water from the Columbia River is converted into potable water through conventional water treatment facilities. Conventional water treatment facilities are located in the 100, 200, and 300 Areas as well as in the city of Richland. Data for potable water from the Columbia River are provided in Table 5-2.

4.3 Potable Water from Groundwater (Well Water)

Groundwater is used as a source water in the 400 Area, the Hanford Patrol Training Academy, the Yakima Barricade, and the areas supplied by the City of Richland Municipal System. In the 400 Area, three deep wells (one primary and two backup) supply water to three storage tanks. Before entering the storage tanks, the water is chlorinated with a 12.5 percent sodium hypochlorite solution. Sodium hypochlorite is used to maintain the chlorine concentration in the water system between 0.4 and 1.0 parts per million. Storage tank water is used as supply water for sanitary water pumped throughout the 400 Area for domestic and process use. Data for 400 Area raw groundwater and potable groundwater are provided in Tables 5-3 and 5-4 respectively.

As described in Section 5.0, all data included in this permit application was obtained from the onsite liquid effluent monitoring information system (LEMIS). No sample results are available in LEMIS for the groundwater source at the Hanford Patrol Training Academy, the groundwater source at the Yakima Barricade, or the water supplied by the city of

Richland. Groundwater used at the Hanford Patrol Training Academy is treated with sodium hypochlorite, and there is no treatment to the groundwater used at the Yakima Barricade. The city of Richland uses groundwater as a source approximately 30 percent of the time. Chlorine is added to the water before the water enters the distribution system.

4.4 Storm Water

Storm water is rainfall and snowmelt runoff.

5.0 ANALYTICAL RESULTS

The data presented and discussed in the following sections were derived from the onsite liquid effluent monitoring information system (LEMIS). This database is operated by the DOE-RL and contains data in accordance with sampling and analysis plans on numerous streams. The applicable LEMIS data obtained from samples taken between 1992 and 1994 were compared to WAC 173-200 GWQC. The analytical results for raw water from the Columbia River, potable water, groundwater from the 400 Area, and potable water derived from groundwater in the 400 Area are summarized in Tables 5-1 through 5-4. Supporting data were provided as Attachments 1 through 4 in the categorical *State Waste Discharge Permit Application for Hydrotest, Maintenance, and Construction Discharges* (DOE/RL 1995). The supporting data include the original data from LEMIS sorted by water type and includes all analytes sampled, methods, qualifiers, and results. Table 5-5 presents a steam condensate sample from the PUREX Facility. Supporting data for Table 5-5 are provided as Attachment 2.

The analytical summary Tables 5-1 through 5-5 are formatted to present the following information:

- Analyte
- Units
- Practical Quantitation Limits (PQLs)
- Analytical method
- WAC 173-200 GWQC
- Average concentration.

Analytes are presented in Tables 5-1 through 5-4 in the same order as the WAC 173-200 GWQC. Data are presented for analytes that correspond with the GWQC. If more than one analytical method was used to analyze samples for a particular analyte, each of these methods is reported and the results averaged. Particular analytes have been combined in the summary tables to allow comparison to the WAC 173-200 GWQC, as discussed in the table footnotes.

To eliminate reporting a range of detection limits recorded over the span of the analyses, the PQLs are provided in the tables for the WAC 173-200 GWQC. The PQLs were obtained from previously approved permits and from *Guidance on Sampling and Data Analysis Methods* (Ecology 1995). If more than one method was used, both PQLs are provided in the

table. The PQLs are not available (NA) if the analyte and the applicable method were not in the guidance document (Ecology 1995) or previous permits.

A description of the qualifiers is provided in the *Data Validation Procedures for Chemical Analyses* (WHC 1993). The average concentrations found in the summary tables are based on the total data set with the exception of samples qualified with an 'R', 'W' or for organic data, a 'B'. Attachments 1 through 4 provide information on the complete data set. Average concentration values in the summary tables were calculated as follows.

- Measurements with a 'U' qualifier were established as zero.
- Measurements qualified with a 'UJ' equal half of the PQL.
- Remaining measurements were summed as the value of the reported concentration.

The following sections explain instances where the average concentration exceeds the GWQC for each summary table. Detailed supporting data were submitted previously with the Categorical WAC 173-216 Permit Application for Hydrotest, Maintenance and Construction Discharges (DOE/RL 1995). Detailed supporting data are provided only in Table 5-5, PUREX steam condensate.

5.1 Columbia River Raw Water Data

The summary of the analytical data from the Columbia River raw water distribution system is presented in Table 5-1. The analytes where the average concentration exceeded WAC 173-200 GWQC include the following:

- Aldrin
- Benzo[a]pyrene
- 3-3-Dichlorobenzidine
- 3-3-Dimethylbenzidine
- 2,6-Dinitrotoluene
- Hexachlorobenzene
- N-Nitrosodi-n-propylamine
- N-Nitrosodibutylamine
- Polychlorinated biphenyls
- Toxaphene
- Arsenic
- Bis(2-chloroethyl)ether
- 1,3-Dichloropropene
- 2,4-Dinitrotoluene
- Heptachlor epoxide
- N-Nitrosodiethylamine
- N-Nitrosopyrrolidine
- Polycyclic aromatic hydrocarbons
- o-Toluidine
- Vinyl chloride.

Average concentrations of aldrin and arsenic concentrations exceed the WAC 173-200 GWQC of 0.005 μg/L and 0.05 μg/L respectively. The average value of aldrin was 0.01 μg/L. The average arsenic concentration was 4.0 μg/L. Since arsenic or aldrin are not used in the Hanford Site water systems, the likely source of aldrin and arsenic in the raw water is the Columbia River.

There are 18 remaining constituents that exceed the WAC 173-200 GWQC. The majority of these samples were less than detection limits. However, there were a few samples

qualified with 'UJ'. The 'UJ' qualifier indicates an estimated value. These values qualified with 'UJ' were calculated as one half of the PQL in the average. Because the PQL is greater than the WAC 173-200 GWQC, average values of these constituents most likely are higher than actual values.

5.2 Columbia River Potable Water Data

The summary of the potable water analytical data is presented in Table 5-2. The analytes for which the average concentrations exceed the WAC 173-200 GWQC include the following:

- Aldrin
- Arsenic
- Bis(2-ethylhexyl)phthalate.
- Bromodichloromethane
- Chloroform

The average concentration of aldrin (0.017 μg/L) exceeds the WAC 173-200 GWQC of 0.005 μg/L. One measurable sample of aldrin was detected in the Plutonium Finishing Plant potable (sanitary) water. The likely source of aldrin is the Columbia River.

Arsenic was detected in concentrations exceeding WAC 173-200 GWQC of 0.05 μg/L. The average concentration of arsenic is 1.76 μg/L. The likely source of arsenic is the Columbia River.

The average value of bis(2-ethylhexyl)phthalate is 10.69 μg/L. This value exceeded the corresponding WAC 173-200 GWQC of 6 μg/L. Bis(2-ethylhexyl)phthalate is a common contaminant from plastic pipes. Polyvinyl chloride and polyethylene plastic piping are used for the potable water system.

The average concentration of bromodichloromethane was 1.64 μg/L. This concentration of bromodichloromethane exceeded the corresponding WAC 173-200 GWQC of 0.3 μg/L. The average concentration of chloroform detected is 37.21 μg/L, which exceeds the WAC 173-200 GWQC of 7 μg/L. Bromodichloromethane and chloroform are residual byproducts of chlorinating the Columbia River water.

5.3 400 Area Potable Water Data

The summary of the 400 Area potable water analytical data is presented in Table 5-3. Additional supporting data are provided in Attachment 3. The analytes for which the average concentrations exceed WAC 173-200 GWQC include the following:

- Arsenic
- Bromodichloromethane.

Arsenic was detected in three of four samples in concentrations exceeding WAC 173-200 GWQC. The average concentration of arsenic is 2.03 μg/L which exceeds the GWQC of 0.05 μg/L. The potential source of arsenic is the groundwater.

The average concentration of bromodichloromethane was 0.75 μg/L, which is greater than the WAC 173-200 GWQC of 0.3 μg/L and less than the PQL of 5 μg/L. Bromodichloromethane is a known residual byproduct of chlorination.

5.4 400 Area Raw Water Data

The summary of the 400 Area raw water analytical data is presented in Table 5-4. For the one sample that was analyzed, the analytes exceeding WAC 173-200 GWQC include the following:

- pH
- Arsenic.
- Coliform total and fecal

The one sample indicated a pH value of 8.7, which exceeds the range of acceptable pH values defined by the WAC 173-200 GWQC (6.5 to 8.5). The pH value could be a result of natural fluctuation in alkalinity.

One sample taken from the 400 Area raw water indicated a coliform total and fecal value of 22. Review by facility personnel of additional data reported by the Hanford Environmental Health Foundation (HEHF) indicates that this is an anomaly. HEHF data from 1990 through 1994 show less than detectable values of total and fecal coliform. Since the sanitary lagoons are down gradient from the drinking water wells and the wells draw from deeper in the aquifer, the sanitary lagoons are not considered a reasonable source for the high coliform value. The source of contamination in this one sample is unknown.

Arsenic was detected at a concentration of 2.0 μg/L. This concentration exceeds the WAC 173-200 GWQC of 0.05 μg/L. The likely source of arsenic is groundwater.

5.5 PUREX Steam Condensate

The summary of the PUREX steam condensate is presented in Table 5-5. Additional supporting data are provided in Attachment 2. The analytes for which the average concentrations exceed the WAC 173-200 GWQC include the following:

- pH
- Arsenic

Arsenic was detected in the PUREX steam condensate samples in concentrations exceeding WAC 173-200 GWQC of 0.05 μg/L . The average concentration of arsenic is 1.5 μg/L. The likely source of arsenic is the Columbia River.

The average value of pH is 5.6. The pH is maintained at lower levels to control corrosion and scaling in the steam system.

Table 5-1. Columbia River Raw Water Data Summary Table.

Analyte	Analytical method	Units	WAC 173-200 Ground Water Quality Criteria	PQL[1]	Average concentration
PRIMARY CONTAMINANTS					
Barium	SW-846 6010	µg/L	1,000	NA	29.36
Cadmium	SW-846 6010	µg/L	10	40	3.82
Chromium	SW-846 6010	µg/L	50	NA	4.96
Lead	SW-846 6010, 7421	µg/L	50	420, 10	5.96
Mercury	SW-846 7470	µg/L	2	2	0.48
Selenium	SW-846 6010, 7740	µg/L	10	750, 20	3.4
Silver	SW-846 6010	µg/L	50	70	17.38
Fluoride	EPA-600 300.0	mg/L	4	NA	0.11
Nitrate (as Nitrogen) [2]	EPA-600, 300.0, 350.1, 350.3	mg/L	10	0.1	0.035
Endrin	SW-846 8080	µg/L	0.2	0.06	0.01
Methoxychlor	SW-846 8080	µg/L	100	2	0.41
1,1,1-Trichloroethane	SW-846 8240	µg/L	200	5	0.22
2,4-D	SW-846 8150	µg/L	100	NA	ND
2,4,5-TP (silvex)	SW-846 8150	µg/L	10	2	0.41
Coliform total and fecal	SW-846 9131	TCOL	1/100	NA	ND
SECONDARY CONTAMINANTS					
Copper	SW-846 6010	µg/L	1,000	60	15.87
Iron	SW-846 6010	µg/L	300	100	45.35
Manganese	SW-846 6010	µg/L	50	50	3.94
Zinc	SW-846 6010	µg/L	5,000	20	15.32
Chloride	EPA-600 300.0	mg/L	250	1	1.06
Sulfate	EPA-600 300.0, 375.4	mg/L	250	10	9.72

Table 5-1. Columbia River Raw Water Data Summary Table.

Analyte	Analytical method	Units	WAC 173-200 Ground Water Quality Criteria	PQL[1]	Average concentration
Total dissolved solids	EPA-600 160.1	mg/L	500	10	90.23
pH measurement	SW-846 9040	pH	6.5-8.5	NA	8.26
RADIONUCLIDES					
Tritium	EP-20, TRITIUM	pCi/L	20,000	NA	ND
Strontium-90	SR-89/90	pCi/L	8	NA	ND
Total radium	RADIUM TOTAL, EA-34	pCi/L	5	5	0.73
Radium-226	RC-30, GAMMA SCAN	pCi/L	3	1	0.50
CARCINOGENS					
Acrylonitrile	SW-846 8240	µg/L	0.07	NA	ND
Aldrin	SW-846 8080	µg/L	0.005	0.04	0.01
Aniline	SW-846 8270	µg/L	14	10	1.0
Aramite	SW-846 8270	µg/L	3	20	2.26
Arsenic	SW-846 6010, 7060	µg/L	0.05	530, 15	4.0
Benzene	SW-846 8240	µg/L	1	5	0.22
Benzidine	SW-846 8270	µg/L	0.0004	NA	ND
Benzo[a]pyrene	SW-846 8270, 8310	µg/L	0.008	10, 0.2	0.94
Bis(2-chloroethyl) ether	SW-846 8270	µg/L	0.07	10	0.97
Bis(2-ethylhexyl) phthalate	SW-846 8270	µg/L	6	10	4.30
Bromodichloromethane	SW-846 8240	µg/L	0.3	5	0.28
Bromoform	SW-846 8240	µg/L	5	5	0.22
Carbazole	SW-846 8270	µg/L	5	10	0.97
Carbon tetrachloride	SW-846 8240	µg/L	0.3	5	0.22
Chlordane	SW-846 8080	µg/L	0.06	0.14	0.03

Table 5-1. Columbia River Raw Water Data Summary Table.

Analyte	Analytical method	Units	WAC 173-200 Ground Water Quality Criteria	PQL[1]	Average concentration
Chloroform	SW-846 8240	µg/L	7	5	1.28
Chlorthalonil	SW-846 8080	µg/L	30	NA	ND
Diallate (cis or trans)	SW-846 8270	µg/L	1	NA	ND
DDT [3]	SW-846 8080	µg/L	0.3	NA	ND
1,2-Dibromoethane	SW-846 8240	µg/L	0.001	NA	ND
1,4-Dichlorobenzene	SW-846 8270	µg/L	4	10	1.13
3-3-Dichlorobenzidine	SW-846 8270	µg/L	0.2	20	1.94
1,1-Dichloroethane	SW-846 8240	µg/L	1	5	0.22
1,2-Dichloroethane	SW-846 8240	µg/L	0.5	5	0.22
1,2-Dichloropropane	SW-846 8240	µg/L	0.6	5	0.22
1,3-Dichloropropene [4]	SW-846 8240	µg/L	0.2	NA	0.44
Dichlorovos	SW-846 8140	µg/L	0.3	NA	0.03
Dieldrin	SW-846 8080	µg/L	0.005	0.02	0.003
3-3-Dimethylbenzidine	SW-846 8270	µg/L	0.007	10	1.0
2,4-Dinitrotoluene	SW-846 8270	µg/L	0.1	10	0.97
2,6-Dinitrotoluene	SW-846 8270	µg/L	0.1	10	0.97
1,4-Dioxane	SW-846 8240	µg/L	7	10	0.48
Epichlorohydrin	SW-846 8240	µg/L	8	NA	ND
Ethylacrylate	SW-846 8240	µg/L	2	NA	ND
Folpet	SW-846 8080	µg/L	20	NA	ND
Heptachlor	SW-846 8080	µg/L	0.02	0.03	0.004
Heptachlor epoxide	SW-846 8080	µg/L	0.009	0.8	0.12
Hexachlorobenzene	SW-846 8270	µg/L	0.05	10	0.97
Hexachlorohexane [5] (technical)	SW-846 8080	µg/L	0.05	NA	0.006
Lindane	SW-846 8080	µg/L	0.06	0.04	ND
Methylene chloride	SW-846 8240	µg/L	5	5	0.67
Mirex	SW-846 8080	µg/L	0.05	NA	ND
N-Nitrosodiethylamine	SW-846 8270	µg/L	0.0005	20	2.0

Table 5-1. Columbia River Raw Water Data Summary Table.

Analyte	Analytical method	Units	WAC 173-200 Ground Water Quality Criteria	PQL[1]	Average concentration
N-Nitrosodimethylamine	SW-846 8270	µg/L	0.002	NA	ND
N-Nitrosodiphyenylamine	SW-846 8270	µg/L	17	10	0.97
N-Nitrosodi-n-propylamine	SW-846 8270	µg/L	0.01	10	0.97
N-Nitrosopyrrolidine	SW-846 8270	µg/L	0.04	40	4.0
N-Nitrosodibutylamine	SW-846 8270	µg/L	0.02	10	1.0
PAHs [6]	SW-846 8270, 8310	µg/L	0.01	NA	16
PBBS	SW-846 8080	µg/L	0.01	NA	ND
PCBs [7]	SW-846 8080	µg/L	0.01	NA	1.3
O-Phenylenediamine	SW-846 8270	µg/L	0.005	NA	ND
O-Toluidine	SW-846 8270	µg/L	0.2	10	1.0
Toxaphene	SW-846 8080	µg/L	0.08	2	0.64
2,4,6-Trichlorophenol	SW-846 8270	µg/L	4	10	0.97
Vinyl chloride	SW-846 8240	µg/L	0.02	10	0.44

Source: Liquid Effluent Monitoring Information System database.
NA = Not available.
ND = Not detected.
µg/L = Micrograms per liter.
mg/L = Milligrams per liter.
PBBs = Polybromated biphenyls.
pCi/L = Picocuries per liter.
pH = Negative logarithm of hydrogen ion concentration in moles/liter.
TCOL = Total coliform count.

1. PQLs were obtained from guidance documents (Ecology 1995). In instances where there were two methods used and two applicable PQLs, both PQLs are listed. "NA" indicated the method used to obtain the data did not match any of the methods in the document or permits; therefore, an applicable PQL value was not available.

2. Nitrate (as Nitrogen) is a summation of Ammonia (as Nitrogen) and Nitrate and Nitrite (as Nitrogen).

3. DDT (includes DDD and DDE) is a summation of 4,4'-DDD, 4,4'-DDE and 4,4'-DDT.

4. 1,3-Dichloropropene (CIS & TRANS) is a summation of CIS-1,3-Dichloropropene and Trans-1,3-Dichloropropene.

5. Hexacholorohexane (technical) is the summation of the alpha, beta, gamma, and delta forms of Borated hydrocarbon.

6. PAH's is a summation of 1,4-Naphthoquinone, 2-Chloronaphtalene, 2-Methylnapthalene, 2-Naphthylamine, 3-Methylcholanthrene, 7,12-Dimethylbenz[a]anthracene, Acenaphthene, Acenaphthylene, Anthracene, Benzo[a]anthracene, Benzo[a]pyrene, Benzo[b]fluoranthene, Benzo[g,h,i]perylene, Benzo[k]fluoranthene, Chrysene, Dibenzo[a,h]anthracene, Fluoranthene, Indeno[1,2,3-cd]pyrene, Phenanthrene, Pyrene, Pyridine.

7. PCB's (Arochlor Species) is a summation of Arochlor 1016, Arochlor 1221, Arochlor 1232, Arochlor 1242, Arochlor 1248, Arochlor 1254, Arochlor 1260.

This page intentionally left blank.

Table 5-2. Columbia River Potable Water Data Summary Table.

Analyte	Analytical method	Units	WAC 173-200 Ground Water Quality Criteria	PQL [1]	Average concentration
PRIMARY CONTAMINANTS					
Barium	SW-846 6010	µg/L	1,000	NA	28.88
Cadmium	SW-846 6010	µg/L	10	40	1.89
Chromium	SW-846 6010	µg/L	50	NA	6.13
Lead	SW-846-6010 SW-846 7421	µg/L	50	420, 10	2.92
Mercury	SW-846 7470	µg/L	2	2	0.10
Selenium	SW-846-6010 SW-846 7740	µg/L	10	750, 20	2.16
Silver	SW-846 6010	µg/L	50	70	4.10
Fluoride	EPA-600 300.0	mg/L	4	NA	0.08
Nitrate (as Nitrogen) [2]	EPA-600 300.0, 350.1, 350.2, 350.3	mg/L	10	0.1	0.03
Endrin	SW-846 8080	µg/L	0.2	0.06	ND
Methoxychlor	SW-846 8080	µg/L	100	2	ND
1,1,1-Trichloroethane	SW-846 8240	µg/L	200	5	ND
2,4-D	SW-846 8150	µg/L	100	NA	0.067
2,4,5-TP (silvex)	SW-846 8150	µg/L	10	2	0.03
SECONDARY CONTAMINANTS					
Copper	SW-846 6010	µg/L	1,000	60	6.64
Iron	SW-846 6010	µg/L	300	100	66.60
Manganese	SW-846 6010	µg/L	50	50	4.83
Zinc	SW-846 6010	µg/L	5,000	20	47.3
Chloride	EPA-600 300.0	mg/L	250	1	3.54
Sulfate	EPA-600 300.0, 375.4	mg/L	250	10	17.6
Total dissolved solids	EPA-600 160.1	mg/L	500	10	90
pH measurement	SW-846 9040	pH	6.5-8.5	NA	7.47

Table 5-2. Columbia River Potable Water Data Summary Table.

Analyte	Analytical method	Units	WAC 173-200 Ground Water Quality Criteria	PQL [1]	Average concentration
RADIONUCLIDES					
Tritium	TRITIUM	pCi/L	20,000	NA	ND
Strontium-90	SR-89/90	pCi/L	8	NA	ND
Strontium-90	STRONTIUM-90	pCi/L	8	NA	ND
Total radium	RADIUM TOTAL	pCi/L	5	5	ND
Radium-226	GAMMA SCAN	pCi/L	3	1	ND
CARCINOGENS					
Acrylonitrile	SW-846 8240	µg/L	0.07	NA	ND
Aldrin	SW-846 8080	µg/L	0.005	0.04	0.017
Aniline	SW-846 8270	µg/L	14	10	ND
Aramite	SW-846 8270	µg/L	3	20	ND
Arsenic	SW-846-6010 SW-846 7060	µg/L	0.05	530, 15	1.76
Benzene	SW-846 8240	µg/L	1	5	0.07
Benzidine	SW-846 8270	µg/L	0.0004	NA	ND
Benzo[a]pyrene	SW-846 8270	µg/L	0.008	10	ND
Bis(2-chloroethyl) ether	SW-846 8270	µg/L	0.07	10	ND
Bis(2-ethylhexyl) phthalate	SW-846 8270	µg/L	6	10	10.69
Bromodichloromethane	SW-846 8240	µg/L	0.3	5	1.64
Bromoform	SW-846 8240	µg/L	5	5	ND
Carbazole	SW-846 8270	µg/L	5	10	ND
Carbon tetrachloride	SW-846 8240	µg/L	0.3	5	ND
Chlordane	SW-846 8080	µg/L	0.06	0.14	ND
Chloroform	SW-846 8240	µg/L	7	5	37.21
Chlorthalonil	SW-846 8080	µg/L	30	NA	ND
Diallate (cis or trans)	SW-846 8270	µg/L	1	NA	ND

Table 5-2. Columbia River Potable Water Data Summary Table.

Analyte	Analytical method	Units	WAC 173-200 Ground Water Quality Criteria	PQL [1]	Average concentration
DDT [3]	SW-846 8080	µg/L	0.3	NA	ND
1,2-Dibromoethane	SW-846 8240	µg/L	0.001	NA	ND
1,4-Dichlorobenzene	SW-846 8270	µg/L	4	10	ND
3-3-Dichlorobenzidine	SW-846 8270	µg/L	0.2	20	ND
1,1-Dichloroethane	SW-846 8240	µg/L	1	5	ND
1,2-Dichloroethane	SW-846 8240	µg/L	0.5	5	ND
1,2-Dichloropropane	SW-846 8240	µg/L	0.6	5	ND
1,3-Dichloropropene [4]	SW-846 8240	µg/L	0.2	NA	ND
Dichlorovos	SW-846 8140	µg/L	0.3	NA	ND
Dieldrin	SW-846 8080	µg/L	0.005	0.02	ND
3-3-Dimethylbenzidine	SW-846 8270	µg/L	0.007	10	ND
2,4-Dinitrotoluene	SW-846 8270	µg/L	0.1	10	ND
2,6-Dinitrotoluene	SW-846 8270	µg/L	0.1	10	ND
1,4-Dioxane	SW-846 8240	µg/L	7	10	ND
Epichlorohydrin	SW-846 8240	µg/L	8	NA	ND
Ethylacrylate	SW-846 8240	µg/L	2	NA	ND
Folpet	SW-846 8080	µg/L	20	NA	ND
Heptachlor	SW-846 8080	µg/L	0.02	0.03	ND
Heptachlor epoxide	SW-846 8080	µg/L	0.009	0.8	ND
Hexachlorobenzene	SW-846 8270	µg/L	0.05	10	ND
Hexachlorohexane [5] (technical)	SW-846 8080	µg/L	0.05	NA	ND
Lindane	SW-846 8080	µg/L	0.06	0.04	ND
Methylene chloride	SW-846 8240	µg/L	5	5	0.54
Mirex	SW-846 8080	µg/L	0.05	NA	ND
N-Nitrosodiethylamine	SW-846 8270	µg/L	0.0005	20	ND
N-Nitrosodimethylamine	SW-846 8270	µg/L	0.002	NA	ND
N-Nitrosodiphyenylamine	SW-846 8270	µg/L	17	10	ND
N-Nitrosodi-n-propylamine	SW-846 8270	µg/L	0.01	10	ND

Table 5-2. Columbia River Potable Water Data Summary Table.

Analyte	Analytical method	Units	WAC 173-200 Ground Water Quality Criteria	PQL [1]	Average concentration
N-Nitrosopyrrolidine	SW-846 8270	µg/L	0.04	40	ND
N-Nitrosodibutylamine	SW-846 8270	µg/L	0.02	10	ND
PAH [6]	SW-846 8270	µg/L	0.01	NA	ND
PBBS	SW-846 8080	µg/L	0.01	NA	ND
PCBs [7]	SW-846 8080	µg/L	0.01	NA	ND
1,4-Phenylenediamine	SW-846 8270	µg/L	0.005	NA	ND
O-Toluidine	SW-846 8270	µg/L	0.2	10	ND
Toxaphene	SW-846 8080	µg/L	0.08	2	ND
2,4,6-Trichlorophenol	SW-846 8270	µg/L	4	10	ND
Vinyl chloride	SW-846 8240	µg/L	0.02	10	ND

Source: Liquid Effluent Monitoring Information System database.
NA = Not available.
ND = Not detected.
µg/L = Micrograms per liter.
mg/L = Milligrams per liter.
PBBs = Polybromated biphenyls.
pCi/L = Picocuries per liter.
pH = Negative logarithm of hydrogen ion concentration in moles/liter.
TCOL = Total coliform count.

1. PQLs were obtained from guidance documents (Ecology 1995). In instances where there were two methods used and two applicable PQLs, both PQLs are listed. "NA" indicated the method used to obtain the data did not match any of the methods in the document or permits; therefore, an applicable PQL value was not available.

2. Nitrate (as Nitrogen) is a summation of Ammonia (as Nitrogen) and Nitrate and Nitrite (as Nitrogen).

3. DDT (includes DDD and DDE) is a summation of 4,4'-DDD, 4,4'-DDE and 4,4'-DDT.

4. 1,3-Dichloropropene (CIS & TRANS) is a summation of CIS-1,3-Dichloropropene and Trans-1,3-Dichloropropene.

5. Hexacholorohexane (technical) is the summation of the alpha, beta, gamma, and delta forms of Borated hydrocarbon.

6. PAH's is a summation of 1,4-Naphthoquinone, 2-Chloronaphtalene, 2-Methylnapthalene, 2-Naphthylamine, 3-Methylcholanthrene, 7,12-Dimethylbenz[a]anthracene, Acenaphthene, Acenaphthylene, Anthracene, Benzo[a]anthracene, Benzo[a]pyrene, Benzo[b]fluoranthene, Benzo[g,h,i]perylene, Benzo[k]fluoranthene, Chrysene, Dibenzo[a,h]anthracene, Fluoranthene, Indeno[1,2,3-cd]pyrene, Phenanthrene, Pyrene, Pyridine.

7. PCB's (Arochlor Species) is a summation of Arochlor 1016, Arochlor 1221, Arochlor 1232, Arochlor 1242, Arochlor 1248, Arochlor 1254, Arochlor 1260.

Table 5-3. 400 Area Potable Water Data Summary Table.

Analyte	Analytical method	Units	WAC 173-200 Ground Water Quality Criteria	PQL[1]	Average concentration
PRIMARY CONTAMINANTS					
Barium	SW-846 6010	µg/L	1,000	NA	18.68
Cadmium	SW-846 6010	µg/L	10	40	3.48
Chromium	SW-846 6010	µg/L	50	NA	5.28
Lead	SW-846 7421	µg/L	50	10	2.37
Mercury	SW-846 7470	µg/L	2	2	0.1
Selenium	SW-846 7740	µg/L	10	20	2.15
Silver	SW-846 6010	µg/L	50	70	5.93
Fluoride	EPA-600 300.0	mg/L	4	NA	0.18
Nitrate (as Nitrogen) [2]	EPA-600, 300.0, 350.1, 350.3	mg/L	10	0.1	ND
Endrin	SW-846 8080	µg/L	0.2	0.06	ND
Methoxychlor	SW-846 8080	µg/L	100	2	ND
1,1,1-Trichloroethane	SW-846 8240	µg/L	200	5	ND
2,4-D	SW-846 8150	µg/L	100	NA	ND
2,4,5-TP (silvex)	SW-846 8150	µg/L	10	2	ND
Total coliform bacteria	SM9221	TCOL	1/100	NA	ND
SECONDARY CONTAMINANTS					
Copper	SW-846 6010	µg/L	1,000	60	6.3
Iron	SW-846 6010	µg/L	300	100	45.63
Manganese	SW-846 6010	µg/L	50	50	19.2
Zinc	SW-846 6010	µg/L	5,000	20	18.73
Chloride	EPA-600 300.0	mg/L	250	1	11.45
Sulfate	EPA-600 300.0	mg/L	250	10	35.78
Total dissolved solids	EPA-600 160.1	mg/L	500	10	245

Table 5-3. 400 Area Potable Water Data Summary Table.

Analyte	Analytical method	Units	WAC 173-200 Ground Water Quality Criteria	PQL[1]	Average concentration
pH measurement	SW-846 9040	pH	6.5-8.5	NA	8.1
RADIONUCLIDES					
Tritium	TRITIUM	pCi/L	20,000	NA	6,728
Strontium-90	SR-89/90	pCi/L	8	NA	ND
Strontium-90	STRONTIUM-90	pCi/L	8	NA	ND
Total radium	RADIUM TOTAL	pCi/L	5	5	ND
Radium-226	RADIUM TOTAL	pCi/L	3	1	ND
CARCINOGENS					
Acrylonitrile	SW-846 8240	µg/L	0.07	NA	ND
Aldrin	SW-846 8080	µg/L	0.005	0.04	ND
Aniline	SW-846 8270	µg/L	14	10	ND
Aramite	SW-846 8270	µg/L	3	20	ND
Arsenic	SW-846 7060	µg/L	0.05	15	2.03
Benzene	SW-846 8240	µg/L	1	5	ND
Benzidine	SW-846 8270	µg/L	0.0004	NA	ND
Benzo[a]pyrene	SW-846 8270	µg/L	0.008	10	ND
Bis(2-chloroethyl) ether	SW-846 8270	µg/L	0.07	10	ND
Bis(2-ethylhexyl) phthalate	SW-846 8270	µg/L	6	10	ND
Bromodichloromethane	SW-846 8240	µg/L	0.3	5	0.75
Bromoform	SW-846 8240	µg/L	5	5	0.75
Carbazole	SW-846 8270	µg/L	5	10	ND
Carbon tetrachloride	SW-846 8240	µg/L	0.3	5	ND
Chlordane	SW-846 8080	µg/L	0.06	0.14	ND
Chloroform	SW-846 8240	µg/L	7	5	ND
Chlorthalonil	SW-846 8080	µg/L	30	NA	ND
Diallate (cis or trans)	SW-846 8270	µg/L	1	NA	ND

Table 5-3. 400 Area Potable Water Data Summary Table.

Analyte	Analytical method	Units	WAC 173-200 Ground Water Quality Criteria	PQL[1]	Average concentration
DDT [3]	SW-846 8080	µg/L	0.3	NA	ND
1,2-Dibromoethane	SW-846 8240	µg/L	0.001	NA	ND
1,4-Dichlorobenzene	SW-846 8270	µg/L	4	10	ND
3-3-Dichlorobenzidine	SW-846 8270	µg/L	0.2	20	ND
1,1-Dichloroethane	SW-846 8240	µg/L	1	5	ND
1,2-Dichloroethane	SW-846 8240	µg/L	0.5	5	ND
1,2-Dichloropropane	SW-846 8240	µg/L	0.6	5	ND
1,3-Dichloropropene [4]	SW-846 8240	µg/L	0.2	NA	ND
Dichlorovos	SW-846 8140	µg/L	0.3	NA	ND
Dieldrin	SW-846 8080	µg/L	0.005	0.02	ND
3-3-Dimethylbenzidine	SW-846 8270	µg/L	0.007	10	ND
2,4-Dinitrotoluene	SW-846 8270	µg/L	0.1	10	ND
2,6-Dinitrotoluene	SW-846 8270	µg/L	0.1	10	ND
1,4-Dioxane	SW-846 8240	µg/L	7	10	ND
Epichlorohydrin	SW-846 8240	µg/L	8	NA	ND
Ethylacrylate	SW-846 8240	µg/L	2	NA	ND
Folpet	SW-846 8080	µg/L	20	NA	ND
Heptachlor	SW-846 8080	µg/L	0.02	0.03	ND
Heptachlor epoxide	SW-846 8080	µg/L	0.009	0.8	ND
Hexachlorobenzene	SW-846 8270	µg/L	0.05	10	ND
Hexachlorocyclohexane (alpha)	SW-846 8080	µg/L	0.001	0.03	ND
Hexachlorocyclo-hexane (technical) [5]	SW-846 8080	µg/L	0.05	NA	ND
Lindane	SW-846 8080	µg/L	0.06	0.04	ND
Methylene chloride	SW-846 8240	µg/L	5	5	ND
Mirex	SW-846 8080	µg/L	0.05	NA	ND
N-Nitrosodiethylamine	SW-846 8270	µg/L	0.0005	20	ND
N-Nitrosodimethylamine	SW-846 8270	µg/L	0.002	NA	ND
N-Nitrosodiphyenylamine	SW-846 8270	µg/L	17	10	ND

Table 5-3. 400 Area Potable Water Data Summary Table.

Analyte	Analytical method	Units	WAC 173-200 Ground Water Quality Criteria	PQL[1]	Average concentration
N-Nitrosodi-n-propylamine	SW-846 8270	µg/L	0.01	10	ND
N-Nitrosopyrrolidine	SW-846 8270	µg/L	0.04	40	ND
N-Nitrosodibutylamine	SW-846 8270	µg/L	0.02	10	ND
PAH [6]	SW-846 8270	µg/L	0.01	NA	ND
PBBS	SW-846 8080	µg/L	0.01	NA	ND
PCBs [7]	SW-846 8080	µg/L	0.01	NA	ND
O-Toluidine	SW-846 8270	µg/L	0.2	10	ND
Toxaphene	SW-846 8080	µg/L	0.08	2	ND
2,4,6-Trichlorophenol	SW-846 8270	µg/L	4	10	ND
Vinyl chloride	SW-846 8240	µg/L	0.02	10	ND

Source: Liquid Effluent Monitoring Information System database.
NA = Not available.
ND = Not detected.
µg/L = Micrograms per liter.
mg/L = Milligrams per liter.
PBBs = Polybromated biphenyls.
pCi/L = Picocuries per liter.
pH = Negative logarithm of hydrogen ion concentration in moles/liter.
TCOL = Total coliform count.

1. PQLs were obtained from guidance documents (Ecology 1995). In instances where there were two methods used and two applicable PQLs, both PQLs are listed. "NA" indicated the method used to obtain the data did not match any of the methods in the document or permits; therefore, an applicable PQL value was not available.

2. Nitrate (as Nitrogen) is a summation of Ammonia (as Nitrogen) and Nitrate and Nitrite (as Nitrogen).

3. DDT (includes DDD and DDE) is a summation of 4,4'-DDD, 4,4'-DDE and 4,4'-DDT.

4. 1,3-Dichloropropene (CIS & TRANS) is a summation of CIS-1,3-Dichloropropene and Trans-1,3-Dichloropropene.

5. Hexacholorohexane (technical) is the summation of the alpha, beta, gamma, and delta forms of Borated hydrocarbon.

6. PAH's is a summation of 1,4-Naphthoquinone, 2-Chloronaphtalene, 2-Methylnapthalene, 2-Naphthylamine, 3-Methylcholanthrene, 7,12-Dimethylbenz[a]anthracene, Acenaphthene, Acenaphthylene, Anthracene, Benzo[a]anthracene, Benzo[a]pyrene, Benzo[b]fluoranthene, Benzo[g,h,i]perylene, Benzo[k]fluoranthene, Chrysene, Dibenzo[a,h]anthracene, Fluoranthene, Indeno[1,2,3-cd]pyrene, Phenanthrene, Pyrene, Pyridine.

7. PCB's (Arochlor Species) is a summation of Arochlor 1016, Arochlor 1221, Arochlor 1232, Arochlor 1242, Arochlor 1248, Arochlor 1254, Arochlor 1260.

Table 5-4. 400 Area Raw Water Data Summary Table.

Analyte	Analytical method	Units	WAC 173-200 Ground Water Quality Criteria	PQL[1]	Measured concentration
PRIMARY CONTAMINANTS					
Barium	SW-846 6010	µg/L	1,000	NA	28.6
Cadmium	SW-846 6010	µg/L	10	40	4
Chromium	SW-846 6010	µg/L	50	NA	7
Lead	SW-846 7421	µg/L	50	10	6
Mercury	SW-846 7470	µg/L	2	2	0.1
Selenium	SW-846 7740	µg/L	10	20	2
Silver	SW-846 6010	µg/L	50	70	7
Fluoride	EPA-600 300.0	mg/L	4	NA	0.5
Nitrate (as Nitrogen) [2]	EPA-600 350.3, 353.3	mg/L	10	0.10	0.23
Endrin	SW-846 8080	µg/L	0.2	0.06	ND
Methoxychlor	SW-846 8080	µg/L	100	2	ND
1,1,1-Trichloroethane	SW-846 8240	µg/L	200	5	ND
2,4-D	SW-846 8150	µg/L	100	NA	ND
2,4,5-TP (silvex)	SW-846 8150	µg/L	10	2	ND
Coliform total and fecal	SM9221	TCOL	1/100	NA	22
SECONDARY CONTAMINANTS					
Copper	SW-846 6010	µg/L	1,000	60	9
Iron	SW-846 6010	µg/L	300	100	28.7
Manganese	SW-846 6010	µg/L	50	50	6.6
Zinc	SW-846 6010	µg/L	5,000	20	64
Chloride	EPA-600 300.0	mg/L	250	1	15.5
Sulfate	EPA-600 300.0	mg/L	250	10	47.6
Total dissolved solids	EPA-600 160.1	mg/L	500	10	333
pH measurement	SW-846 9040	pH	6.5-8.5	NA	8.7

Table 5-5. Purex Steam Condensate Data Summary Table.

Analyte	Analytical method	Units	WAC 173-200 Ground Water Quality Criteria	PQL[1]	Average concentration
PAHs [6]	SW-846 8270	µg/L	0.01	NA	ND
PBBs	SW-846 8080	µg/L	0.01	NA	ND
PCBs [7]	SW-846 8080	µg/L	0.01	NA	ND
1,4-Phenylenediamine	SW-846 8270	µg/L	0.005	NA	ND
O-Toluidine	SW-846 8270	µg/L	0.2	10	ND
Toxaphene	SW-846 8080	µg/L	0.08	2	ND
2,4,6-Trichlorophenol	SW-846 8270	µg/L	4	10	ND
Vinyl chloride	SW-846 8240	µg/L	0.02	10	ND

Source: Liquid Effluent Monitoring Information System database.
NA = Not available.
ND = Not detected.
µg/L = Micrograms per liter.
mg/L = Milligrams per liter.
PBBs = Polybromated biphenyls.
pCi/L = Picocuries per liter.
pH = Negative logarithm of hydrogen ion concentration in moles/liter.
TCOL = Total coliform count.

1. PQLs were obtained from guidance documents (Ecology 1995). In instances where there were two methods used and two applicable PQLs, both PQLs are listed. "NA" indicated the method used to obtain the data did not match any of the methods in the document or permits; therefore, an applicable PQL value was not available.

2. Nitrate (as Nitrogen) is a summation of Ammonia (as Nitrogen) and Nitrate and Nitrite (as Nitrogen).

3. DDT (includes DDD and DDE) is a summation of 4,4'-DDD, 4,4'-DDE and 4,4'-DDT.

4. 1,3-Dichloropropene (CIS & TRANS) is a summation of CIS-1,3-Dichloropropene and Trans-1,3-Dichloropropene.

5. Hexacholorohexane (technical) is the summation of the alpha, beta, gamma, and delta forms of Borated hydrocarbon.

6. PAH's is a summation of 1,4-Naphthoquinone, 2-Chloronaphtalene, 2-Methylnaplthalene, 2-Naphthylamine, 3-Methylcholanthrene, 7,12-Dimethylbenz[a]anthracene, Acenaphthene, Acenaphthylene, Anthracene, Benzo[a]anthracene, Benzo[a]pyrene, Benzo[b]fluoranthene, Benzo[g,h,i]perylene, Benzo[k]fluoranthene, Chrysene, Dibenzo[a,h]anthracene, Fluoranthene, Indeno[1,2,3-cd]pyrene, Phenanthrene, Pyrene, Pyridine.

7. PCB's (Arochlor Species) is a summation of Arochlor 1016, Arochlor 1221, Arochlor 1232, Arochlor 1242, Arochlor 1248, Arochlor 1254, Arochlor 1260.

ITEM 4

Provide additional process knowledge that could effect constituent concentrations.

6.0 ADDITIONAL PROCESS KNOWLEDGE

Detailed process descriptions and additive information are provided in Appendix B, Section 1.0 through 3.0. Detailed source water descriptions are provided in Appendix C, Section 4.0. Table 6-1 presents examples of how additives described in the process descriptions might affect the constituent concentrations. As processes change slightly, additives may be modified. Also, there might be processes that are similar to the ones described in this permit application; however, additives differ slightly.

Table 6-1. Examples of Processes Affecting Constituent Concentrations.

Category	Process	Potential changes in source stream	Potential effects
Cooling Water	Air compressor	Thermal	None
	Diesel engines	Thermal, hydrocarbon	Might contain small amounts of grease, oil, and fuel oil.
	Air conditioning	None	None
	Evaporative cooling	Dissolved solids	Total dissolved solids and total suspended solids may increase due to the evaporation process.
	Ice machines	None	None
	Pumps	None	None
	Valves	None	None
	Overflow	None	None
Condensate	Air compressor	Hydrocarbon	Might contain small amounts of grease, oil, and fuel oil.
	Air conditioning (HVAC)	None	None
	Heating (steam)	Dearborn 66, polyquest 683, super filmeen 14	Considered contaminant free because of negligible quantities leaving steam lines.
	Ice machines	None	None

This page intentionally left blank.

ATTACHMENT 1

This page intentionally left blank.

IDENTIFIED WASTE STREAMS

Table A-1 lists all streams from the Miscellaneous Streams Inventory that are included in this permit application sorted by process. Descriptions of the column headings are as follows.

Stream No.

The stream number is a consecutive reference ID#. When a stream is eliminated or rerouted, this is noted in the comments but the stream # is not reused. Some streams on the initial inventory did not belong on the updated inventory (e.g., when a stream was permitted during a previous action). These streams were removed and their ID#s were reused for newly added streams. This eliminated the process of renumbering streams and allowed for a historical file.

Source Water

Source water is the original water used by the process. Source water should be one of four types of water as follows: A=Groundwater, B=Surface Water, C=Storm Water, D=Potable Water. If there is more than one stream discharging to the disposal structure all source waters should be identified. Detailed descriptions of the four types of source water are provided in Section 4.0.

Process

The process corresponds with the process descriptions described in Sections 1.0 and 2.0.

Process Description

The process description contains the building number and process generating the stream (e.g., steam condensate). Detailed process descriptions are provided in Sections 1.0 and 2.0.

Area

This indicates where the disposal structure is located (e.g., 200 East, 100-N, etc).

Flow (gpm)

Flow rates are estimated. Flow rates for each disposal structure are averaged over a one year period in gallons per minute (gpm). The ranges of the discharge flow rates vary greatly depending on the facility and seasonal fluctuations.

B/C/S

B/C/S corresponds to batch/continuous/seasonal flow types.

Table A-1. Waste Streams Included in this Categorical Permit Application.

Stream No.	Source Water	Process	Process Description	Area	Flow (gpm)	B/C/S[1]
80	Potable Water	Air Compressor	277W Fabrication Shop - Condensate from compressor and HVAC.[2]	200W	<5	C
657	Potable Water	Air Compressor	204-AR Steam Trap and compressor condensate.	200E	<0.01	C
401	Potable Water	Air Compressor	3621D Building - Condensate from air receiver. LOCATION: east of building, in fenced area.	300	<0.01	C
445	Storm Water Potable Water	Air Conditioning	309 Building - Storm water run-off and water from chiller. LOCATION: west of building, near chiller.	300	<0.01	S
22	Potable Water	Air Conditioning	4621W Auxiliary Equipment Building, west side - Effluent has potential to receive condensate from HVAC coolers.	400	<0.01	S
701	Potable Water	Cooling	242AC Building. Quench tank is used to cool carbon and stainless steel. Wastewater is not discharged to SCAs, or within 300 ft of a crib, ditch, or trench.	200E	5	B
702	Potable Water	Cooling	277A Building. Quench tank is used to cool carbon and stainless steel. Wastewater is not discharged to SCAs, or within 300 ft of a crib, ditch, or trench.	200E	5	B
402	Potable Water	Engine	3621D Building - Cooling water from emergency generator diesel engines. LOCATION: northwest of building, inside fenced area.	300	<0.05	B
630	Potable Water	Evaporative Cooling	2750E Building - Overflow cooling water from the evaporative cooler (cools condenser coils on the building heat pumps) discharges to a trench the south of 2750. LOCATION: south of 2750E.	200E	0.13	S
676	Potable Water	Evaporative Cooling	1717K Building - Evaporative cooler discharge (1 Contributor)	100K	<0.01	S
681	Potable Water	Evaporative Cooling	1717K Building - Evaporative cooler discharge (3 contributors)	100K	<0.1	S
29	Potable Water	Heating	4722C Building - originates from a water heater.	400	<0.01	S

Table A-1. Waste Streams Included in this Categorical Permit Application.

Stream No.	Source Water	Process	Process Description	Area	Flow (gpm)	B/C/S[1]
629	Potable Water	Heating	2750E Building - Steam condensate from building heating discharges to a trench near the southwest corner of 2750. LOCATION: southwest of building.	200E	0.3	S
631	Potable Water	Heating	277W Building - Steam condensate from building heat is discharged to this disposal trench.	200W	<0.1	S
468	Potable Water	HVAC	DACS Trailer - HVAC - Condensate from 10 ton HVAC condenser. LOCATION: approximately 10' north of the DACS trailer, 12" below grade.	200W	<0.01	S
16	Storm Water Potable Water	HVAC	4621E Auxiliary Equipment Building - Condensate from HVAC system.	400	<0.01	S
18	Storm Water Potable Water	HVAC	491E Heat Transport Building, east side - Storm water off roof of HTS-E and condensate from HVAC system.	400	<0.01	S
407	Potable Water	HVAC, Compressor	WRAP 1 Building mechanical room. Compressor Condensate and HVAC condensate. Due to the oil blow associated with condensation, an oil-water separator will be installed in the discharge line. LOCATION: north of mechanical room.	200W	<0.01	C
21	Storm Water Potable Water	HVAC, Coolers	4621W Auxiliary Equipment Building, west side-Condensate from HVAC coolers, floor drains, and roof storm water.	400	<0.01	S
641	Potable Water	Ice Machine	2201B Building Ice House - Cooling water and condensate from ice machine.	200E	2	C
490	Potable Water	Ice Machine	271B Building - Lunch room ice machine overflow.	200E	<0.07	C
384	Potable Water	Overflow	284E High Water Tank overflow	200E	2	C
385	Potable Water	Overflow	284W High Water Tank overflow.	200W	5	C
332	Potable Water	Overflow	West high tank overflow and steam condensate trap.	300	<0.01	C

Table A-1. Waste Streams Included in this Categorical Permit Application.

Stream No.	Source Water	Process	Process Description	Area	Flow (gpm)	B/C/S[1]
534	Potable Water	Overflow	273W Building - Sanitary water received from 277W Building. Location: 10' east of building towards north end.	200W	<1	B
73	Potable Water	Pump	181B Building, approximately 60 feet from the Columbia River - cooling water for diesel emergency pump.	100B	<0.5	C
671	Potable Water	Pump	181D Building - Cooling water for diesel emergency pumps.	100D	<0.5	B
34	Groundwater	Pump	480A Pump house, Pump packing leakage - Well water from well pump P-14.	400	<0.01	C
35	Groundwater	Pump	480B Pumphouse, Pump packing leakage - Well water from well pump P-15.	400	<0.01	C
36	Groundwater	Pump	480D Pumphouse, Pump packing leakage - Well water from well pump P-16.	400	<0.01	C
23	Potable Water	Pump	481 Pumphouse - Sanitary water from pump seal leaks and salt water from water softener regeneration.	400	<0.1	C
492	Surface Water	Valve	183N Building - When fire system piping is opened at the valve pit for repair, untreated raw water from the Columbia River (via Hanford Site export water system) drains from pipes into the pit. LOCATION: valve pit north of building.	100N	<0.01	B
559	Potable Water	Valve	272E Building - Water from valve. LOCATION: 50' south of southwest corner.	200E	<1	C
560	Potable Water	Valve	273E Building 72-inch well - Water from vacuum vent line for sanitary water. LOCATION: 50' north of building towards west side.	200E	<1	C
561	Potable Water	Valve	273E Building Control valve above 12-inch well - Potable water from valve. LOCATION: 50' north of building towards east side.	200E	<1	C
703	Groundwater	Valves	Pressure relief valves throughout the Hanford Site.[3]	All	<0.01	B

Table A-1. Waste Streams Included in this Categorical Permit Application.

Stream No.	Source Water	Process	Process Description	Area	Flow (gpm)	B/C/S[1]
704	Surface Water	Valves	Pressure relief valves throughout the Hanford Site.[3]	All	<0.01	B
705	Potable Water	Valves	Pressure relief valves throughout the Hanford Site.[3]	All	<0.01	B
322	Surface Water	Ventilation	291B Building - Plant Canyon Exhaust Sand Filter Drain - Drains liquid effluent in filter bank if waterproofing seal fails.[4]	200E	0	B

1. B = Batch
   C = Continuous
   S = Seasonal

2. Per Miscellaneous Streams Best Management Practices Report (DOE/RL-96-40), the compressor condensate will be a collected discharge by October 1996.

3. There are hundreds of pressure relief valves throughout the Hanford Site.

4. Per Miscellaneous Streams Best Management Practices Report (DOE/RL-96-40), this stream will be eliminated by September 1998.

This page intentionally left blank.

ATTACHMENT 2

This page intentionally left blank.

9613503.2465

SUPPORTING DATA: STEAM CONDENSATE

FACILITY	ANALYTE	METHOD	RESULT	UNITS	QUALIFIER
PUREX	1,1,1-TRICHLOROETHANE	SW-846 8240	5.00	UG/L	U
PUREX	1,1,1-TRICHLOROETHANE	SW-846 8240	5.00	UG/L	U
PUREX	1,1,1-TRICHLOROETHANE	SW-846 8240	5.00	UG/L	U
PUREX	1,1,1-TRICHLOROETHANE	SW-846 8240	5.00	UG/L	U

FACILITY	ANALYTE	METHOD	RESULT	UNITS	QUALIFIER
PUREX	1,1,2,2-TETRACHLOROETHANE	SW-846 8240	5.00	UG/L	U
PUREX	1,1,2,2-TETRACHLOROETHANE	SW-846 8240	5.00	UG/L	U
PUREX	1,1,2,2-TETRACHLOROETHANE	SW-846 8240	5.00	UG/L	U
PUREX	1,1,2,2-TETRACHLOROETHANE	SW-846 8240	5.00	UG/L	U

FACILITY	ANALYTE	METHOD	RESULT	UNITS	QUALIFIER
PUREX	1,1,2-TRICHLOROETHANE	SW-846 8240	5.00	UG/L	U
PUREX	1,1,2-TRICHLOROETHANE	SW-846 8240	5.00	UG/L	U
PUREX	1,1,2-TRICHLOROETHANE	SW-846 8240	5.00	UG/L	U
PUREX	1,1,2-TRICHLOROETHANE	SW-846 8240	5.00	UG/L	U

FACILITY	ANALYTE	METHOD	RESULT	UNITS	QUALIFIER
PUREX	1,1-DICHLOROETHANE	SW-846 8240	5.00	UG/L	U
PUREX	1,1-DICHLOROETHANE	SW-846 8240	5.00	UG/L	U
PUREX	1,1-DICHLOROETHANE	SW-846 8240	5.00	UG/L	U
PUREX	1,1-DICHLOROETHANE	SW-846 8240	5.00	UG/L	U

FACILITY	ANALYTE	METHOD	RESULT	UNITS	QUALIFIER
PUREX	1,1-DICHLOROETHENE	SW-846 8240	5.00	UG/L	U
PUREX	1,1-DICHLOROETHENE	SW-846 8240	5.00	UG/L	U
PUREX	1,1-DICHLOROETHENE	SW-846 8240	5.00	UG/L	U
PUREX	1,1-DICHLOROETHENE	SW-846 8240	5.00	UG/L	U

FACILITY	ANALYTE	METHOD	RESULT	UNITS	QUALIFIER
PUREX	1,2,3-TRICHLOROPROPANE	SW-846 8240	10.00	UG/L	U
PUREX	1,2,3-TRICHLOROPROPANE	SW-846 8240	10.00	UG/L	U
PUREX	1,2,3-TRICHLOROPROPANE	SW-846 8240	10.00	UG/L	U
PUREX	1,2,3-TRICHLOROPROPANE	SW-846 8240	10.00	UG/L	U

FACILITY	ANALYTE	METHOD	RESULT	UNITS	QUALIFIER
PUREX	1,2,4,5-TETRACHLOROBENZENE	SW-846 8270	10.00	UG/L	U
PUREX	1,2,4,5-TETRACHLOROBENZENE	SW-846 8270	10.00	UG/L	U
PUREX	1,2,4,5-TETRACHLOROBENZENE	SW-846 8270	10.00	UG/L	U
PUREX	1,2,4,5-TETRACHLOROBENZENE	SW-846 8270	10.00	UG/L	U

FACILITY	ANALYTE	METHOD	RESULT	UNITS	QUALIFIER
PUREX	1,2,4-TRICHLOROBENZENE	SW-846 8270	10.00	UG/L	U
PUREX	1,2,4-TRICHLOROBENZENE	SW-846 8270	10.00	UG/L	U
PUREX	1,2,4-TRICHLOROBENZENE	SW-846 8270	10.00	UG/L	U
PUREX	1,2,4-TRICHLOROBENZENE	SW-846 8270	10.00	UG/L	U

FACILITY	ANALYTE	METHOD	RESULT	UNITS	QUALIFIER
PUREX	1,2-DIBROMO-3-CHLOROPROPANE	SW-846 8240	50.00	UG/L	U
PUREX	1,2-DIBROMO-3-CHLOROPROPANE	SW-846 8240	50.00	UG/L	U
PUREX	1,2-DIBROMO-3-CHLOROPROPANE	SW-846 8240	50.00	UG/L	U
PUREX	1,2-DIBROMO-3-CHLOROPROPANE	SW-846 8240	50.00	UG/L	U

FACILITY	ANALYTE	METHOD	RESULT	UNITS	QUALIFIER
PUREX	1,2-DIBROMOETHANE	SW-846 8240	5.00	UG/L	U
PUREX	1,2-DIBROMOETHANE	SW-846 8240	5.00	UG/L	U
PUREX	1,2-DIBROMOETHANE	SW-846 8240	5.00	UG/L	U
PUREX	1,2-DIBROMOETHANE	SW-846 8240	5.00	UG/L	U

SUPPORTING DATA: STEAM CONDENSATE

FACILITY	ANALYTE	METHOD	RESULT	UNITS	QUALIFIER
PUREX	1,2-DICHLOROBENZENE	SW-846 8270	10.00	UG/L	U

FACILITY	ANALYTE	METHOD	RESULT	UNITS	QUALIFIER
PUREX	1,2-DICHLOROETHANE	SW-846 8240	5.00	UG/L	U
PUREX	1,2-DICHLOROETHANE	SW-846 8240	5.00	UG/L	U
PUREX	1,2-DICHLOROETHANE	SW-846 8240	5.00	UG/L	U
PUREX	1,2-DICHLOROETHANE	SW-846 8240	5.00	UG/L	U

FACILITY	ANALYTE	METHOD	RESULT	UNITS	QUALIFIER
PUREX	1,2-DICHLOROPROPANE	SW-846 8240	5.00	UG/L	U
PUREX	1,2-DICHLOROPROPANE	SW-846 8240	5.00	UG/L	U
PUREX	1,2-DICHLOROPROPANE	SW-846 8240	5.00	UG/L	U
PUREX	1,2-DICHLOROPROPANE	SW-846 8240	5.00	UG/L	U

FACILITY	ANALYTE	METHOD	RESULT	UNITS	QUALIFIER
PUREX	1,3,5-TRINITROBENZENE	SW-846 8270	50.00	UG/L	U
PUREX	1,3,5-TRINITROBENZENE	SW-846 8270	50.00	UG/L	U
PUREX	1,3,5-TRINITROBENZENE	SW-846 8270	50.00	UG/L	U
PUREX	1,3,5-TRINITROBENZENE	SW-846 8270	50.00	UG/L	U

FACILITY	ANALYTE	METHOD	RESULT	UNITS	QUALIFIER
PUREX	1,3-DICHLOROBENZENE	SW-846 8270	10.00	UG/L	U
PUREX	1,3-DICHLOROBENZENE	SW-846 8270	10.00	UG/L	U
PUREX	1,3-DICHLOROBENZENE	SW-846 8270	10.00	UG/L	U
PUREX	1,3-DICHLOROBENZENE	SW-846 8270	10.00	UG/L	U

FACILITY	ANALYTE	METHOD	RESULT	UNITS	QUALIFIER
PUREX	1,3-DINITROBENZENE	SW-846 8270	50.00	UG/L	U
PUREX	1,3-DINITROBENZENE	SW-846 8270	50.00	UG/L	U
PUREX	1,3-DINITROBENZENE	SW-846 8270	50.00	UG/L	U
PUREX	1,3-DINITROBENZENE	SW-846 8270	50.00	UG/L	U

FACILITY	ANALYTE	METHOD	RESULT	UNITS	QUALIFIER
PUREX	1,4-DICHLOROBENZENE	SW-846 8270	10.00	UG/L	U
PUREX	1,4-DICHLOROBENZENE	SW-846 8270	10.00	UG/L	U
PUREX	1,4-DICHLOROBENZENE	SW-846 8270	10.00	UG/L	U
PUREX	1,4-DICHLOROBENZENE	SW-846 8270	10.00	UG/L	U

FACILITY	ANALYTE	METHOD	RESULT	UNITS	QUALIFIER
PUREX	1,4-DIOXANE	SW-846 8240	200.00	UG/L	U
PUREX	1,4-DIOXANE	SW-846 8240	200.00	UG/L	U
PUREX	1,4-DIOXANE	SW-846 8240	200.00	UG/L	U
PUREX	1,4-DIOXANE	SW-846 8240	200.00	UG/L	U

FACILITY	ANALYTE	METHOD	RESULT	UNITS	QUALIFIER
PUREX	1,4-NAPHTHOQUINONE	SW-846 8270	20.00	UG/L	U
PUREX	1,4-NAPHTHOQUINONE	SW-846 8270	20.00	UG/L	U
PUREX	1,4-NAPHTHOQUINONE	SW-846 8270	20.00	UG/L	U
PUREX	1,4-NAPHTHOQUINONE	SW-846 8270	20.00	UG/L	U

FACILITY	ANALYTE	METHOD	RESULT	UNITS	QUALIFIER
PUREX	1,4-PHENYLENEDIAMINE	SW-846 8270	50.00	UG/L	U

FACILITY	ANALYTE	METHOD	RESULT	UNITS	QUALIFIER
PUREX	1-NAPHTHYLAMINE	SW-846 8270	10.00	UG/L	U
PUREX	1-NAPHTHYLAMINE	SW-846 8270	10.00	UG/L	U
PUREX	1-NAPHTHYLAMINE	SW-846 8270	10.00	UG/L	U
PUREX	1-NAPHTHYLAMINE	SW-846 8270	10.00	UG/L	U

9613503.2465

SUPPORTING DATA: STEAM CONDENSATE

FACILITY	ANALYTE	METHOD	RESULT	UNITS	QUALIFIER
PUREX	2,3,4,6-TETRACHLOROPHENOL	SW-846 8270	50.00	UG/L	U
PUREX	2,3,4,6-TETRACHLOROPHENOL	SW-846 8270	50.00	UG/L	U
PUREX	2,3,4,6-TETRACHLOROPHENOL	SW-846 8270	50.00	UG/L	U
PUREX	2,3,4,6-TETRACHLOROPHENOL	SW-846 8270	50.00	UG/L	U

FACILITY	ANALYTE	METHOD	RESULT	UNITS	QUALIFIER
PUREX	2,4,5-T	SW-846 8150	0.20	UG/L	U
PUREX	2,4,5-T	SW-846 8150	0.20	UG/L	U
PUREX	2,4,5-T	SW-846 8150	0.20	UG/L	U
PUREX	2,4,5-T	SW-846 8150	0.20	UG/L	U

FACILITY	ANALYTE	METHOD	RESULT	UNITS	QUALIFIER
PUREX	2,4,5-TP (SILVEX)	SW-846 8150	0.20	UG/L	U
PUREX	2,4,5-TP (SILVEX)	SW-846 8150	0.20	UG/L	U
PUREX	2,4,5-TP (SILVEX)	SW-846 8150	0.20	UG/L	U
PUREX	2,4,5-TP (SILVEX)	SW-846 8150	0.20	UG/L	U

FACILITY	ANALYTE	METHOD	RESULT	UNITS	QUALIFIER
PUREX	2,4,5-TRICHLOROPHENOL	SW-846 8270	10.00	UG/L	U
PUREX	2,4,5-TRICHLOROPHENOL	SW-846 8270	10.00	UG/L	U
PUREX	2,4,5-TRICHLOROPHENOL	SW-846 8270	10.00	UG/L	U
PUREX	2,4,5-TRICHLOROPHENOL	SW-846 8270	10.00	UG/L	U

FACILITY	ANALYTE	METHOD	RESULT	UNITS	QUALIFIER
PUREX	2,4,6-TRICHLOROPHENOL	SW-846 8270	10.00	UG/L	U
PUREX	2,4,6-TRICHLOROPHENOL	SW-846 8270	10.00	UG/L	U
PUREX	2,4,6-TRICHLOROPHENOL	SW-846 8270	10.00	UG/L	U
PUREX	2,4,6-TRICHLOROPHENOL	SW-846 8270	10.00	UG/L	U

FACILITY	ANALYTE	METHOD	RESULT	UNITS	QUALIFIER
PUREX	2,4-D	SW-846 8150	2.00	UG/L	U
PUREX	2,4-D	SW-846 8150	2.00	UG/L	U
PUREX	2,4-D	SW-846 8150	2.00	UG/L	U
PUREX	2,4-D	SW-846 8150	2.00	UG/L	U

FACILITY	ANALYTE	METHOD	RESULT	UNITS	QUALIFIER
PUREX	2,4-DB	SW-846 8150	2.00	UG/L	U
PUREX	2,4-DB	SW-846 8150	2.00	UG/L	U
PUREX	2,4-DB	SW-846 8150	2.00	UG/L	U
PUREX	2,4-DB	SW-846 8150	2.00	UG/L	U

FACILITY	ANALYTE	METHOD	RESULT	UNITS	QUALIFIER
PUREX	2,4-DICHLOROPHENOL	SW-846 8270	10.00	UG/L	U
PUREX	2,4-DICHLOROPHENOL	SW-846 8270	10.00	UG/L	U
PUREX	2,4-DICHLOROPHENOL	SW-846 8270	10.00	UG/L	U
PUREX	2,4-DICHLOROPHENOL	SW-846 8270	10.00	UG/L	U

FACILITY	ANALYTE	METHOD	RESULT	UNITS	QUALIFIER
PUREX	2,4-DIMETHYLPHENOL	SW-846 8270	10.00	UG/L	U
PUREX	2,4-DIMETHYLPHENOL	SW-846 8270	10.00	UG/L	U
PUREX	2,4-DIMETHYLPHENOL	SW-846 8270	10.00	UG/L	U
PUREX	2,4-DIMETHYLPHENOL	SW-846 8270	10.00	UG/L	U

FACILITY	ANALYTE	METHOD	RESULT	UNITS	QUALIFIER
PUREX	2,4-DINITROPHENOL	SW-846 8270	50.00	UG/L	U
PUREX	2,4-DINITROPHENOL	SW-846 8270	50.00	UG/L	U
PUREX	2,4-DINITROPHENOL	SW-846 8270	50.00	UG/L	U
PUREX	2,4-DINITROPHENOL	SW-846 8270	50.00	UG/L	U

SUPPORTING DATA: STEAM CONDENSATE

FACILITY	ANALYTE	METHOD	RESULT	UNITS	QUALIFIER
PUREX	2,4-DINITROTOLUENE	SW-846 8270	10.00	UG/L	U
PUREX	2,4-DINITROTOLUENE	SW-846 8270	10.00	UG/L	U
PUREX	2,4-DINITROTOLUENE	SW-846 8270	10.00	UG/L	U
PUREX	2,4-DINITROTOLUENE	SW-846 8270	10.00	UG/L	U

FACILITY	ANALYTE	METHOD	RESULT	UNITS	QUALIFIER
PUREX	2,6-DICHLOROPHENOL	SW-846 8270	10.00	UG/L	U
PUREX	2,6-DICHLOROPHENOL	SW-846 8270	10.00	UG/L	U
PUREX	2,6-DICHLOROPHENOL	SW-846 8270	10.00	UG/L	U
PUREX	2,6-DICHLOROPHENOL	SW-846 8270	10.00	UG/L	U

FACILITY	ANALYTE	METHOD	RESULT	UNITS	QUALIFIER
PUREX	2,6-DINITROTOLUENE	SW-846 8270	10.00	UG/L	U
PUREX	2,6-DINITROTOLUENE	SW-846 8270	10.00	UG/L	U
PUREX	2,6-DINITROTOLUENE	SW-846 8270	10.00	UG/L	U
PUREX	2,6-DINITROTOLUENE	SW-846 8270	10.00	UG/L	U

FACILITY	ANALYTE	METHOD	RESULT	UNITS	QUALIFIER
PUREX	2-ACETYLAMINOFLTIORENE	SW-846 8270	20.00	UG/L	U
PUREX	2-ACETYLAMINOFLTIORENE	SW-846 8270	20.00	UG/L	U
PUREX	2-ACETYLAMINOFLTIORENE	SW-846 8270	20.00	UG/L	U
PUREX	2-ACETYLAMINOFLTIORENE	SW-846 8270	20.00	UG/L	U

FACILITY	ANALYTE	METHOD	RESULT	UNITS	QUALIFIER
PUREX	2-BUTANONE	SW-846 8240	10.00	UG/L	U
PUREX	2-BUTANONE	SW-846 8240	10.00	UG/L	U
PUREX	2-BUTANONE	SW-846 8240	10.00	UG/L	U
PUREX	2-BUTANONE	SW-846 8240	10.00	UG/L	U

FACILITY	ANALYTE	METHOD	RESULT	UNITS	QUALIFIER
PUREX	2-CHLORONAPHTALENE	SW-846 8270	10.00	UG/L	U
PUREX	2-CHLORONAPHTALENE	SW-846 8270	10.00	UG/L	U
PUREX	2-CHLORONAPHTALENE	SW-846 8270	10.00	UG/L	U
PUREX	2-CHLORONAPHTALENE	SW-846 8270	10.00	UG/L	U

FACILITY	ANALYTE	METHOD	RESULT	UNITS	QUALIFIER
PUREX	2-CHLOROPHENOL	SW-846 8270	10.00	UG/L	U
PUREX	2-CHLOROPHENOL	SW-846 8270	10.00	UG/L	U
PUREX	2-CHLOROPHENOL	SW-846 8270	10.00	UG/L	U
PUREX	2-CHLOROPHENOL	SW-846 8270	10.00	UG/L	U

FACILITY	ANALYTE	METHOD	RESULT	UNITS	QUALIFIER
PUREX	2-HEXANONE	SW-846 8240	10.00	UG/L	U
PUREX	2-HEXANONE	SW-846 8240	10.00	UG/L	U
PUREX	2-HEXANONE	SW-846 8240	10.00	UG/L	U
PUREX	2-HEXANONE	SW-846 8240	10.00	UG/L	U

FACILITY	ANALYTE	METHOD	RESULT	UNITS	QUALIFIER
PUREX	2-METHYLNAPLTHALENE	SW-846 8270	10.00	UG/L	U
PUREX	2-METHYLNAPLTHALENE	SW-846 8270	10.00	UG/L	U
PUREX	2-METHYLNAPLTHALENE	SW-846 8270	10.00	UG/L	U
PUREX	2-METHYLNAPLTHALENE	SW-846 8270	10.00	UG/L	U

FACILITY	ANALYTE	METHOD	RESULT	UNITS	QUALIFIER
PUREX	2-METHYLPHENOL	SW-846 8270	10.00	UG/L	U
PUREX	2-METHYLPHENOL	SW-846 8270	10.00	UG/L	U
PUREX	2-METHYLPHENOL	SW-846 8270	10.00	UG/L	U
PUREX	2-METHYLPHENOL	SW-846 8270	10.00	UG/L	U

9613503.2467

SUPPORTING DATA: STEAM CONDENSATE

FACILITY	ANALYTE	METHOD	RESULT	UNITS	QUALIFIER
PUREX	2-NAPHTHYLAMINE	SW-846 8270	10.00	UG/L	U
PUREX	2-NAPHTHYLAMINE	SW-846 8270	10.00	UG/L	U
PUREX	2-NAPHTHYLAMINE	SW-846 8270	10.00	UG/L	U
PUREX	2-NAPHTHYLAMINE	SW-846 8270	10.00	UG/L	U

FACILITY	ANALYTE	METHOD	RESULT	UNITS	QUALIFIER
PUREX	2-NITROANILINE	SW-846 8270	50.00	UG/L	U
PUREX	2-NITROANILINE	SW-846 8270	50.00	UG/L	U
PUREX	2-NITROANILINE	SW-846 8270	50.00	UG/L	U
PUREX	2-NITROANILINE	SW-846 8270	50.00	UG/L	U

FACILITY	ANALYTE	METHOD	RESULT	UNITS	QUALIFIER
PUREX	2-NITROPHENOL	SW-846 8270	10.00	UG/L	U
PUREX	2-NITROPHENOL	SW-846 8270	10.00	UG/L	U
PUREX	2-NITROPHENOL	SW-846 8270	10.00	UG/L	U
PUREX	2-NITROPHENOL	SW-846 8270	10.00	UG/L	U

FACILITY	ANALYTE	METHOD	RESULT	UNITS	QUALIFIER
PUREX	2-PICOLINE	SW-846 8270	10.00	UG/L	U
PUREX	2-PICOLINE	SW-846 8270	10.00	UG/L	U
PUREX	2-PICOLINE	SW-846 8270	10.00	UG/L	U
PUREX	2-PICOLINE	SW-846 8270	10.00	UG/L	U

FACILITY	ANALYTE	METHOD	RESULT	UNITS	QUALIFIER
PUREX	3-3-DICHLOROBENZIDINE	SW-846 8270	20.00	UG/L	U
PUREX	3-3-DICHLOROBENZIDINE	SW-846 8270	20.00	UG/L	U
PUREX	3-3-DICHLOROBENZIDINE	SW-846 8270	20.00	UG/L	U
PUREX	3-3-DICHLOROBENZIDINE	SW-846 8270	20.00	UG/L	U

FACILITY	ANALYTE	METHOD	RESULT	UNITS	QUALIFIER
PUREX	3-3-DIMETHYLBENZIDINE	SW-846 8270	20.00	UG/L	U
PUREX	3-3-DIMETHYLBENZIDINE	SW-846 8270	20.00	UG/L	U
PUREX	3-3-DIMETHYLBENZIDINE	SW-846 8270	20.00	UG/L	U
PUREX	3-3-DIMETHYLBENZIDINE	SW-846 8270	20.00	UG/L	U

FACILITY	ANALYTE	METHOD	RESULT	UNITS	QUALIFIER
PUREX	3-METHYLCHOLANTHRENE	SW-846 8270	20.00	UG/L	U
PUREX	3-METHYLCHOLANTHRENE	SW-846 8270	20.00	UG/L	U
PUREX	3-METHYLCHOLANTHRENE	SW-846 8270	20.00	UG/L	U
PUREX	3-METHYLCHOLANTHRENE	SW-846 8270	20.00	UG/L	U

FACILITY	ANALYTE	METHOD	RESULT	UNITS	QUALIFIER
PUREX	3-NITROANILINE	SW-846 8270	50.00	UG/L	U
PUREX	3-NITROANILINE	SW-846 8270	50.00	UG/L	U
PUREX	3-NITROANILINE	SW-846 8270	50.00	UG/L	U
PUREX	3-NITROANILINE	SW-846 8270	50.00	UG/L	U

FACILITY	ANALYTE	METHOD	RESULT	UNITS	QUALIFIER
PUREX	4,4'-DDD	SW-846 8080	0.10	UG/L	U
PUREX	4,4'-DDD	SW-846 8080	0.10	UG/L	U
PUREX	4,4'-DDD	SW-846 8080	0.10	UG/L	U
PUREX	4,4'-DDD	SW-846 8080	0.10	UG/L	U

FACILITY	ANALYTE	METHOD	RESULT	UNITS	QUALIFIER
PUREX	4,4'-DDE	SW-846 8080	0.10	UG/L	U
PUREX	4,4'-DDE	SW-846 8080	0.10	UG/L	U
PUREX	4,4'-DDE	SW-846 8080	0.10	UG/L	U
PUREX	4,4'-DDE	SW-846 8080	0.10	UG/L	U

SUPPORTING DATA: STEAM CONDENSATE

FACILITY	ANALYTE	METHOD	RESULT	UNITS	QUALIFIER
PUREX	4,4'-DDT	SW-846 8080	0.10	UG/L	U
PUREX	4,4'-DDT	SW-846 8080	0.10	UG/L	U
PUREX	4,4'-DDT	SW-846 8080	0.10	UG/L	U
PUREX	4,4'-DDT	SW-846 8080	0.10	UG/L	U

FACILITY	ANALYTE	METHOD	RESULT	UNITS	QUALIFIER
PUREX	4,6-DINITRO-2-METHYLPHENOL	SW-846 8270	50.00	UG/L	U
PUREX	4,6-DINITRO-2-METHYLPHENOL	SW-846 8270	50.00	UG/L	U
PUREX	4,6-DINITRO-2-METHYLPHENOL	SW-846 8270	50.00	UG/L	U
PUREX	4,6-DINITRO-2-METHYLPHENOL	SW-846 8270	50.00	UG/L	U

FACILITY	ANALYTE	METHOD	RESULT	UNITS	QUALIFIER
PUREX	4-AMINOBIPHENYL	SW-846 8270	10.00	UG/L	U
PUREX	4-AMINOBIPHENYL	SW-846 8270	10.00	UG/L	U
PUREX	4-AMINOBIPHENYL	SW-846 8270	10.00	UG/L	U
PUREX	4-AMINOBIPHENYL	SW-846 8270	10.00	UG/L	U

FACILITY	ANALYTE	METHOD	RESULT	UNITS	QUALIFIER
PUREX	4-BROMOPHENYL PHENYL ETHER	SW-846 8270	20.00	UG/L	U
PUREX	4-BROMOPHENYL PHENYL ETHER	SW-846 8270	20.00	UG/L	U
PUREX	4-BROMOPHENYL PHENYL ETHER	SW-846 8270	20.00	UG/L	U
PUREX	4-BROMOPHENYL PHENYL ETHER	SW-846 8270	20.00	UG/L	U

FACILITY	ANALYTE	METHOD	RESULT	UNITS	QUALIFIER
PUREX	4-CHLORO-3-METHYLPHENOL	SW-846 8270	10.00	UG/L	U
PUREX	4-CHLORO-3-METHYLPHENOL	SW-846 8270	10.00	UG/L	U
PUREX	4-CHLORO-3-METHYLPHENOL	SW-846 8270	10.00	UG/L	U
PUREX	4-CHLORO-3-METHYLPHENOL	SW-846 8270	10.00	UG/L	U

FACILITY	ANALYTE	METHOD	RESULT	UNITS	QUALIFIER
PUREX	4-CHLOROANILINE	SW-846 8270	10.00	UG/L	U
PUREX	4-CHLOROANILINE	SW-846 8270	10.00	UG/L	U
PUREX	4-CHLOROANILINE	SW-846 8270	10.00	UG/L	U
PUREX	4-CHLOROANILINE	SW-846 8270	10.00	UG/L	U

FACILITY	ANALYTE	METHOD	RESULT	UNITS	QUALIFIER
PUREX	4-CHLOROPHENYL PHENYL ETHER	SW-846 8270	10.00	UG/L	U
PUREX	4-CHLOROPHENYL PHENYL ETHER	SW-846 8270	10.00	UG/L	U
PUREX	4-CHLOROPHENYL PHENYL ETHER	SW-846 8270	10.00	UG/L	U
PUREX	4-CHLOROPHENYL PHENYL ETHER	SW-846 8270	10.00	UG/L	U

FACILITY	ANALYTE	METHOD	RESULT	UNITS	QUALIFIER
PUREX	4-METHYL-2-PENTANONE	SW-846 8240	10.00	UG/L	U
PUREX	4-METHYL-2-PENTANONE	SW-846 8240	10.00	UG/L	U
PUREX	4-METHYL-2-PENTANONE	SW-846 8240	10.00	UG/L	U
PUREX	4-METHYL-2-PENTANONE	SW-846 8240	10.00	UG/L	U

FACILITY	ANALYTE	METHOD	RESULT	UNITS	QUALIFIER
PUREX	4-METHYLPHENOL	SW-846 8270	10.00	UG/L	U
PUREX	4-METHYLPHENOL	SW-846 8270	10.00	UG/L	U
PUREX	4-METHYLPHENOL	SW-846 8270	10.00	UG/L	U
PUREX	4-METHYLPHENOL	SW-846 8270	10.00	UG/L	U

FACILITY	ANALYTE	METHOD	RESULT	UNITS	QUALIFIER
PUREX	4-NITROANILINE	SW-846 8270	50.00	UG/L	U
PUREX	4-NITROANILINE	SW-846 8270	50.00	UG/L	U
PUREX	4-NITROANILINE	SW-846 8270	50.00	UG/L	U
PUREX	4-NITROANILINE	SW-846 8270	50.00	UG/L	U

9613503.2469

SUPPORTING DATA: STEAM CONDENSATE

FACILITY	ANALYTE	METHOD	RESULT	UNITS	QUALIFIER
PUREX	4-NITROPHENOL	SW-846 8270	50.00	UG/L	U
PUREX	4-NITROPHENOL	SW-846 8270	50.00	UG/L	U
PUREX	4-NITROPHENOL	SW-846 8270	50.00	UG/L	U
PUREX	4-NITROPHENOL	SW-846 8270	50.00	UG/L	U

FACILITY	ANALYTE	METHOD	RESULT	UNITS	QUALIFIER
PUREX	4-NITROQUINOLINE-1-OXIDE	SW-846 8270	100.00	UG/L	U
PUREX	4-NITROQUINOLINE-1-OXIDE	SW-846 8270	100.00	UG/L	U
PUREX	4-NITROQUINOLINE-1-OXIDE	SW-846 8270	100.00	UG/L	U
PUREX	4-NITROQUINOLINE-1-OXIDE	SW-846 8270	100.00	UG/L	U

FACILITY	ANALYTE	METHOD	RESULT	UNITS	QUALIFIER
PUREX	5-NITRO-O-TOLUIDINE	SW-846 8270	10.00	UG/L	U
PUREX	5-NITRO-O-TOLUIDINE	SW-846 8270	10.00	UG/L	U
PUREX	5-NITRO-O-TOLUIDINE	SW-846 8270	10.00	UG/L	U
PUREX	5-NITRO-O-TOLUIDINE	SW-846 8270	10.00	UG/L	U

FACILITY	ANALYTE	METHOD	RESULT	UNITS	QUALIFIER
PUREX	7,12-DIMETHYLBENZ[A]ANTHRACENE	SW-846 8270	20.00	UG/L	U
PUREX	7,12-DIMETHYLBENZ[A]ANTHRACENE	SW-846 8270	20.00	UG/L	U
PUREX	7,12-DIMETHYLBENZ[A]ANTHRACENE	SW-846 8270	20.00	UG/L	U
PUREX	7,12-DIMETHYLBENZ[A]ANTHRACENE	SW-846 8270	20.00	UG/L	U

FACILITY	ANALYTE	METHOD	RESULT	UNITS	QUALIFIER
PUREX	ACENAPHTHENE	SW-846 8270	10.00	UG/L	U
PUREX	ACENAPHTHENE	SW-846 8270	10.00	UG/L	U
PUREX	ACENAPHTHENE	SW-846 8270	10.00	UG/L	U
PUREX	ACENAPHTHENE	SW-846 8270	10.00	UG/L	U

FACILITY	ANALYTE	METHOD	RESULT	UNITS	QUALIFIER
PUREX	ACENAPHTHYLENE	SW-846 8270	10.00	UG/L	U
PUREX	ACENAPHTHYLENE	SW-846 8270	10.00	UG/L	U
PUREX	ACENAPHTHYLENE	SW-846 8270	10.00	UG/L	U
PUREX	ACENAPHTHYLENE	SW-846 8270	10.00	UG/L	U

FACILITY	ANALYTE	METHOD	RESULT	UNITS	QUALIFIER
PUREX	ACETONE	SW-846 8240	10.00	UG/L	U
PUREX	ACETONE	SW-846 8240	10.00	UG/L	U
PUREX	ACETONE	SW-846 8240	10.00	UG/L	U
PUREX	ACETONE	SW-846 8240	35.00	UG/L	

FACILITY	ANALYTE	METHOD	RESULT	UNITS	QUALIFIER
PUREX	ACETONITRILE	SW-846 8240	100.00	UG/L	U
PUREX	ACETONITRILE	SW-846 8240	100.00	UG/L	U
PUREX	ACETONITRILE	SW-846 8240	100.00	UG/L	U
PUREX	ACETONITRILE	SW-846 8240	100.00	UG/L	U

FACILITY	ANALYTE	METHOD	RESULT	UNITS	QUALIFIER
PUREX	ACETOPHENONE	SW-846 8270	10.00	UG/L	U
PUREX	ACETOPHENONE	SW-846 8270	10.00	UG/L	U
PUREX	ACETOPHENONE	SW-846 8270	10.00	UG/L	U
PUREX	ACETOPHENONE	SW-846 8270	10.00	UG/L	U

FACILITY	ANALYTE	METHOD	RESULT	UNITS	QUALIFIER
PUREX	ACROLEIN	SW-846 8240	100.00	UG/L	U
PUREX	ACROLEIN	SW-846 8240	100.00	UG/L	U
PUREX	ACROLEIN	SW-846 8240	100.00	UG/L	U
PUREX	ACROLEIN	SW-846 8240	100.00	UG/L	U

SUPPORTING DATA: STEAM CONDENSATE

FACILITY	ANALYTE	METHOD	RESULT	UNITS	QUALIFIER
PUREX	ACRYLONITRILE	SW-846 8240	200.00	UG/L	U
PUREX	ACRYLONITRILE	SW-846 8240	200.00	UG/L	U
PUREX	ACRYLONITRILE	SW-846 8240	200.00	UG/L	U
PUREX	ACRYLONITRILE	SW-846 8240	200.00	UG/L	U

FACILITY	ANALYTE	METHOD	RESULT	UNITS	QUALIFIER
PUREX	ALDRIN	SW-846 8080	0.05	UG/L	U
PUREX	ALDRIN	SW-846 8080	0.02	UG/L	U
PUREX	ALDRIN	SW-846 8080	0.05	UG/L	U
PUREX	ALDRIN	SW-846 8080	0.05	UG/L	U

FACILITY	ANALYTE	METHOD	RESULT	UNITS	QUALIFIER
PUREX	ALKALINITY	EPA-600 310.1	2.00	MG/L	U
PUREX	ALKALINITY	EPA-600 310.1	2.00	MG/L	U
PUREX	ALKALINITY	EPA-600 310.1	2.00	MG/L	U
PUREX	ALKALINITY	EPA-600 310.1	2.00	MG/L	U

FACILITY	ANALYTE	METHOD	RESULT	UNITS	QUALIFIER
PUREX	ALLYL CHLORIDE	SW-846 8240	10.00	UG/L	U
PUREX	ALLYL CHLORIDE	SW-846 8240	10.00	UG/L	U
PUREX	ALLYL CHLORIDE	SW-846 8240	10.00	UG/L	U
PUREX	ALLYL CHLORIDE	SW-846 8240	10.00	UG/L	U

FACILITY	ANALYTE	METHOD	RESULT	UNITS	QUALIFIER
PUREX	ALPHA,ALPHA-DIMETHYLPHENETHYLAMINE	SW-846 8270	10.00	UG/L	U
PUREX	ALPHA,ALPHA-DIMETHYLPHENETHYLAMINE	SW-846 8270	10.00	UG/L	U
PUREX	ALPHA,ALPHA-DIMETHYLPHENETHYLAMINE	SW-846 8270	10.00	UG/L	U
PUREX	ALPHA,ALPHA-DIMETHYLPHENETHYLAMINE	SW-846 8270	10.00	UG/L	U

FACILITY	ANALYTE	METHOD	RESULT	UNITS	QUALIFIER
PUREX	ALPHA-BHC	SW-846 8080	0.05	UG/L	U
PUREX	ALPHA-BHC	SW-846 8080	0.05	UG/L	U
PUREX	ALPHA-BHC	SW-846 8080	0.05	UG/L	U
PUREX	ALPHA-BHC	SW-846 8080	0.05	UG/L	U

FACILITY	ANALYTE	METHOD	RESULT	UNITS	QUALIFIER
PUREX	ALPHA-CHLORDANE	SW-846 8080	0.05	UG/L	U
PUREX	ALPHA-CHLORDANE	SW-846 8080	0.05	UG/L	U
PUREX	ALPHA-CHLORDANE	SW-846 8080	0.05	UG/L	U
PUREX	ALPHA-CHLORDANE	SW-846 8080	0.05	UG/L	U

FACILITY	ANALYTE	METHOD	RESULT	UNITS	QUALIFIER
PUREX	ALUMINUM	SW-846 6010	22.80	UG/L	

FACILITY	ANALYTE	METHOD	RESULT	UNITS	QUALIFIER
PUREX	AMERICIUM-241	AMERICIUM-241	0.04	PCI/L	U
PUREX	AMERICIUM-241	AMERICIUM-241	0.04	PCI/L	U
PUREX	AMERICIUM-241	AMERICIUM-241	0.03	PCI/L	U
PUREX	AMERICIUM-241	AMERICIUM-241	0.01	PCI/L	U

FACILITY	ANALYTE	METHOD	RESULT	UNITS	QUALIFIER
PUREX	AMMONIA (AS N)	EPA-600 350.3	0.05	MG/L	U
PUREX	AMMONIA (AS N)	EPA-600 350.3	0.05	MG/L	U
PUREX	AMMONIA (AS N)	EPA-600 350.3	0.05	MG/L	U
PUREX	AMMONIA (AS N)	EPA-600 350.3	0.07	MG/L	

FACILITY	ANALYTE	METHOD	RESULT	UNITS	QUALIFIER
PUREX	ANILINE	SW-846 8270	10.00	UG/L	U

9613503.2471

SUPPORTING DATA: STEAM CONDENSATE

FACILITY	ANALYTE	METHOD	RESULT	UNITS	QUALIFIER
PUREX	ANILINE	SW-846 8270	10.00	UG/L	U
PUREX	ANILINE	SW-846 8270	10.00	UG/L	U
PUREX	ANILINE	SW-846 8270	10.00	UG/L	U

FACILITY	ANALYTE	METHOD	RESULT	UNITS	QUALIFIER
PUREX	ANTHRACENE	SW-846 8270	10.00	UG/L	U
PUREX	ANTHRACENE	SW-846 8270	10.00	UG/L	U
PUREX	ANTHRACENE	SW-846 8270	10.00	UG/L	U
PUREX	ANTHRACENE	SW-846 8270	10.00	UG/L	U

FACILITY	ANALYTE	METHOD	RESULT	UNITS	QUALIFIER
PUREX	ANTIMONY	SW-846 6010	2.00	UG/L	
PUREX	ANTIMONY	SW-846 6010	12.80	UG/L	
PUREX	ANTIMONY	SW-846 6010	12.20	UG/L	
PUREX	ANTIMONY	SW-846 6010	14.70	UG/L	

FACILITY	ANALYTE	METHOD	RESULT	UNITS	QUALIFIER
PUREX	ARAMITE	SW-846 8270	50.00	UG/L	U
PUREX	ARAMITE	SW-846 8270	50.00	UG/L	U
PUREX	ARAMITE	SW-846 8270	50.00	UG/L	U
PUREX	ARAMITE	SW-846 8270	50.00	UG/L	U

FACILITY	ANALYTE	METHOD	RESULT	UNITS	QUALIFIER
PUREX	AROCHLOR 1016	SW-846 8080	1.00	UG/L	U
PUREX	AROCHLOR 1016	SW-846 8080	1.00	UG/L	U
PUREX	AROCHLOR 1016	SW-846 8080	1.00	UG/L	U
PUREX	AROCHLOR 1016	SW-846 8080	1.00	UG/L	U

FACILITY	ANALYTE	METHOD	RESULT	UNITS	QUALIFIER
PUREX	AROCHLOR 1221	SW-846 8080	2.00	UG/L	U
PUREX	AROCHLOR 1221	SW-846 8080	2.00	UG/L	U
PUREX	AROCHLOR 1221	SW-846 8080	2.00	UG/L	U
PUREX	AROCHLOR 1221	SW-846 8080	2.00	UG/L	U

FACILITY	ANALYTE	METHOD	RESULT	UNITS	QUALIFIER
PUREX	AROCHLOR 1232	SW-846 8080	1.00	UG/L	U
PUREX	AROCHLOR 1232	SW-846 8080	1.00	UG/L	U
PUREX	AROCHLOR 1232	SW-846 8080	1.00	UG/L	U
PUREX	AROCHLOR 1232	SW-846 8080	1.00	UG/L	U

FACILITY	ANALYTE	METHOD	RESULT	UNITS	QUALIFIER
PUREX	AROCHLOR 1242	SW-846 8080	1.00	UG/L	U
PUREX	AROCHLOR 1242	SW-846 8080	1.00	UG/L	U
PUREX	AROCHLOR 1242	SW-846 8080	1.00	UG/L	U
PUREX	AROCHLOR 1242	SW-846 8080	1.00	UG/L	U

FACILITY	ANALYTE	METHOD	RESULT	UNITS	QUALIFIER
PUREX	AROCHLOR 1248	SW-846 8080	1.00	UG/L	U
PUREX	AROCHLOR 1248	SW-846 8080	1.00	UG/L	U
PUREX	AROCHLOR 1248	SW-846 8080	1.00	UG/L	U
PUREX	AROCHLOR 1248	SW-846 8080	1.00	UG/L	U

FACILITY	ANALYTE	METHOD	RESULT	UNITS	QUALIFIER
PUREX	AROCHLOR 1254	SW-846 8080	1.00	UG/L	U
PUREX	AROCHLOR 1254	SW-846 8080	1.00	UG/L	U
PUREX	AROCHLOR 1254	SW-846 8080	1.00	UG/L	U
PUREX	AROCHLOR 1254	SW-846 8080	1.00	UG/L	U

SUPPORTING DATA: STEAM CONDENSATE

FACILITY	ANALYTE	METHOD	RESULT	UNITS	QUALIFIER
PUREX	AROCHLOR 1260	SW-846 8080	1.00	UG/L	U
PUREX	AROCHLOR 1260	SW-846 8080	1.00	UG/L	U
PUREX	AROCHLOR 1260	SW-846 8080	1.00	UG/L	U
PUREX	AROCHLOR 1260	SW-846 8080	1.00	UG/L	U

FACILITY	ANALYTE	METHOD	RESULT	UNITS	QUALIFIER
PUREX	ARSENIC	SW-846 6010	1.50	UG/L	
PUREX	ARSENIC	SW-846 7060	1.70	UG/L	
PUREX	ARSENIC	SW-846 7060	1.30	UG/L	
PUREX	ARSENIC	SW-846 7060	2.20	UG/L	W

FACILITY	ANALYTE	METHOD	RESULT	UNITS	QUALIFIER
PUREX	BARIUM	SW-846 6010	1.00	UG/L	
PUREX	BARIUM	SW-846 6010	1.20	UG/L	
PUREX	BARIUM	SW-846 6010	0.80	UG/L	
PUREX	BARIUM	SW-846 6010	1.20	UG/L	

FACILITY	ANALYTE	METHOD	RESULT	UNITS	QUALIFIER
PUREX	BENZENE	SW-846 8240	5.00	UG/L	U
PUREX	BENZENE	SW-846 8240	5.00	UG/L	U
PUREX	BENZENE	SW-846 8240	5.00	UG/L	U
PUREX	BENZENE	SW-846 8240	5.00	UG/L	U

FACILITY	ANALYTE	METHOD	RESULT	UNITS	QUALIFIER
PUREX	BENZIDINE	SW-846 8270	50.00	UG/L	U
PUREX	BENZIDINE	SW-846 8270	50.00	UG/L	U
PUREX	BENZIDINE	SW-846 8270	50.00	UG/L	U
PUREX	BENZIDINE	SW-846 8270	50.00	UG/L	U

FACILITY	ANALYTE	METHOD	RESULT	UNITS	QUALIFIER
PUREX	BENZOIC ACID	SW-846 8270	50.00	UG/L	U
PUREX	BENZOIC ACID	SW-846 8270	50.00	UG/L	U
PUREX	BENZOIC ACID	SW-846 8270	50.00	UG/L	U
PUREX	BENZOIC ACID	SW-846 8270	50.00	UG/L	U

FACILITY	ANALYTE	METHOD	RESULT	UNITS	QUALIFIER
PUREX	BENZO[A]ANTHRACENE	SW-846 8270	10.00	UG/L	U
PUREX	BENZO[A]ANTHRACENE	SW-846 8270	10.00	UG/L	U
PUREX	BENZO[A]ANTHRACENE	SW-846 8270	10.00	UG/L	U
PUREX	BENZO[A]ANTHRACENE	SW-846 8270	10.00	UG/L	U

FACILITY	ANALYTE	METHOD	RESULT	UNITS	QUALIFIER
PUREX	BENZO[A]PYRENE	SW-846 8270	10.00	UG/L	U
PUREX	BENZO[A]PYRENE	SW-846 8270	10.00	UG/L	U
PUREX	BENZO[A]PYRENE	SW-846 8270	10.00	UG/L	U
PUREX	BENZO[A]PYRENE	SW-846 8270	10.00	UG/L	U

FACILITY	ANALYTE	METHOD	RESULT	UNITS	QUALIFIER
PUREX	BENZO[B]FLUORANTHENE	SW-846 8270	10.00	UG/L	U
PUREX	BENZO[B]FLUORANTHENE	SW-846 8270	10.00	UG/L	U
PUREX	BENZO[B]FLUORANTHENE	SW-846 8270	10.00	UG/L	U
PUREX	BENZO[B]FLUORANTHENE	SW-846 8270	10.00	UG/L	U

FACILITY	ANALYTE	METHOD	RESULT	UNITS	QUALIFIER
PUREX	BENZO[G,H,I]PERYLENE	SW-846 8270	10.00	UG/L	U
PUREX	BENZO[G,H,I]PERYLENE	SW-846 8270	10.00	UG/L	U
PUREX	BENZO[G,H,I]PERYLENE	SW-846 8270	10.00	UG/L	U
PUREX	BENZO[G,H,I]PERYLENE	SW-846 8270	10.00	UG/L	U

9613503.2473

SUPPORTING DATA: STEAM CONDENSATE

FACILITY	ANALYTE	METHOD	RESULT	UNITS	QUALIFIER
PUREX	BENZO[K]FLUORANTHENE	SW-846 8270	10.00	UG/L	U
PUREX	BENZO[K]FLUORANTHENE	SW-846 8270	10.00	UG/L	U
PUREX	BENZO[K]FLUORANTHENE	SW-846 8270	10.00	UG/L	U
PUREX	BENZO[K]FLUORANTHENE	SW-846 8270	10.00	UG/L	U

FACILITY	ANALYTE	METHOD	RESULT	UNITS	QUALIFIER
PUREX	BENZYL ALCOHOL	SW-846 8270	20.00	UG/L	U
PUREX	BENZYL ALCOHOL	SW-846 8270	20.00	UG/L	U
PUREX	BENZYL ALCOHOL	SW-846 8270	20.00	UG/L	U
PUREX	BENZYL ALCOHOL	SW-846 8270	20.00	UG/L	U

FACILITY	ANALYTE	METHOD	RESULT	UNITS	QUALIFIER
PUREX	BERYLLIUM	SW-846 6010	0.40	UG/L	
PUREX	BERYLLIUM	SW-846 6010	0.20	UG/L	
PUREX	BERYLLIUM	SW-846 6010	0.30	UG/L	
PUREX	BERYLLIUM	SW-846 6010	0.40	UG/L	

FACILITY	ANALYTE	METHOD	RESULT	UNITS	QUALIFIER
PUREX	BETA-BHC	SW-846 8080	0.05	UG/L	U
PUREX	BETA-BHC	SW-846 8080	0.05	UG/L	U
PUREX	BETA-BHC	SW-846 8080	0.05	UG/L	U
PUREX	BETA-BHC	SW-846 8080	0.05	UG/L	U

FACILITY	ANALYTE	METHOD	RESULT	UNITS	QUALIFIER
PUREX	BIS(2-CHLOROETHOXY) METHANE	SW-846 8270	10.00	UG/L	U
PUREX	BIS(2-CHLOROETHOXY) METHANE	SW-846 8270	10.00	UG/L	U
PUREX	BIS(2-CHLOROETHOXY) METHANE	SW-846 8270	10.00	UG/L	U
PUREX	BIS(2-CHLOROETHOXY) METHANE	SW-846 8270	10.00	UG/L	U

FACILITY	ANALYTE	METHOD	RESULT	UNITS	QUALIFIER
PUREX	BIS(2-CHLOROETHYL) ETHER	SW-846 8270	10.00	UG/L	U
PUREX	BIS(2-CHLOROETHYL) ETHER	SW-846 8270	10.00	UG/L	U
PUREX	BIS(2-CHLOROETHYL) ETHER	SW-846 8270	10.00	UG/L	U
PUREX	BIS(2-CHLOROETHYL) ETHER	SW-846 8270	10.00	UG/L	U

FACILITY	ANALYTE	METHOD	RESULT	UNITS	QUALIFIER
PUREX	BIS(2-CHLOROISOPROPYL) ETHER	SW-846 8270	10.00	UG/L	U
PUREX	BIS(2-CHLOROISOPROPYL) ETHER	SW-846 8270	10.00	UG/L	U
PUREX	BIS(2-CHLOROISOPROPYL) ETHER	SW-846 8270	10.00	UG/L	U
PUREX	BIS(2-CHLOROISOPROPYL) ETHER	SW-846 8270	10.00	UG/L	U

FACILITY	ANALYTE	METHOD	RESULT	UNITS	QUALIFIER
PUREX	BIS(2-ETHYLHEXYL) PHTHALATE	SW-846 8270	10.00	UG/L	U
PUREX	BIS(2-ETHYLHEXYL) PHTHALATE	SW-846 8270	3.00	UG/L	J
PUREX	BIS(2-ETHYLHEXYL) PHTHALATE	SW-846 8270	46.00	UG/L	B
PUREX	BIS(2-ETHYLHEXYL) PHTHALATE	SW-846 8270	10.00	UG/L	U

FACILITY	ANALYTE	METHOD	RESULT	UNITS	QUALIFIER
PUREX	BROMODICHLOROMETHANE	SW-846 8240	5.00	UG/L	U
PUREX	BROMODICHLOROMETHANE	SW-846 8240	5.00	UG/L	U
PUREX	BROMODICHLOROMETHANE	SW-846 8240	5.00	UG/L	U
PUREX	BROMODICHLOROMETHANE	SW-846 8240	5.00	UG/L	U

FACILITY	ANALYTE	METHOD	RESULT	UNITS	QUALIFIER
PUREX	BROMOFORM	SW-846 8240	5.00	UG/L	U
PUREX	BROMOFORM	SW-846 8240	5.00	UG/L	U
PUREX	BROMOFORM	SW-846 8240	5.00	UG/L	U
PUREX	BROMOFORM	SW-846 8240	5.00	UG/L	U

SUPPORTING DATA: STEAM CONDENSATE

FACILITY	ANALYTE	METHOD	RESULT	UNITS	QUALIFIER
PUREX	BROMOMETHANE	SW-846 8240	10.00	UG/L	U
PUREX	BROMOMETHANE	SW-846 8240	10.00	UG/L	U
PUREX	BROMOMETHANE	SW-846 8240	10.00	UG/L	U
PUREX	BROMOMETHANE	SW-846 8240	10.00	UG/L	U

FACILITY	ANALYTE	METHOD	RESULT	UNITS	QUALIFIER
PUREX	BUTYL BENZYL PHTALATE	SW-846 8270	10.00	UG/L	U
PUREX	BUTYL BENZYL PHTALATE	SW-846 8270	10.00	UG/L	U
PUREX	BUTYL BENZYL PHTALATE	SW-846 8270	10.00	UG/L	U
PUREX	BUTYL BENZYL PHTALATE	SW-846 8270	10.00	UG/L	U

FACILITY	ANALYTE	METHOD	RESULT	UNITS	QUALIFIER
PUREX	CADMIUM	SW-846 6010	1.50	UG/L	
PUREX	CADMIUM	SW-846 6010	1.30	UG/L	
PUREX	CADMIUM	SW-846 6010	1.70	UG/L	
PUREX	CADMIUM	SW-846 6010	1.10	UG/L	

FACILITY	ANALYTE	METHOD	RESULT	UNITS	QUALIFIER
PUREX	CALCIUM	SW-846 6010	35.70	UG/L	

FACILITY	ANALYTE	METHOD	RESULT	UNITS	QUALIFIER
PUREX	CARBAZOLE	SW-846 8270	20.00	UG/L	U
PUREX	CARBAZOLE	SW-846 8270	20.00	UG/L	U
PUREX	CARBAZOLE	SW-846 8270	20.00	UG/L	U
PUREX	CARBAZOLE	SW-846 8270	20.00	UG/L	U

FACILITY	ANALYTE	METHOD	RESULT	UNITS	QUALIFIER
PUREX	CARBON DISULFIDE	SW-846 8240	5.00	UG/L	U
PUREX	CARBON DISULFIDE	SW-846 8240	5.00	UG/L	U
PUREX	CARBON DISULFIDE	SW-846 8240	5.00	UG/L	U
PUREX	CARBON DISULFIDE	SW-846 8240	5.00	UG/L	U

FACILITY	ANALYTE	METHOD	RESULT	UNITS	QUALIFIER
PUREX	CARBON TETRACHLORIDE	SW-846 8240	5.00	UG/L	U
PUREX	CARBON TETRACHLORIDE	SW-846 8240	5.00	UG/L	U
PUREX	CARBON TETRACHLORIDE	SW-846 8240	5.00	UG/L	U
PUREX	CARBON TETRACHLORIDE	SW-846 8240	5.00	UG/L	U

FACILITY	ANALYTE	METHOD	RESULT	UNITS	QUALIFIER
PUREX	CARBON-14	CARBON-14	40.00	PCI/L	U
PUREX	CARBON-14	CARBON-14	100.00	PCI/L	U
PUREX	CARBON-14	CARBON-14	90.00	PCI/L	U
PUREX	CARBON-14	CARBON-14	40.00	PCI/L	U

FACILITY	ANALYTE	METHOD	RESULT	UNITS	QUALIFIER
PUREX	CERIUM-144	GAMMA SCAN	60.00	PCI/L	U
PUREX	CERIUM-144	GAMMA SCAN	60.00	PCI/L	U
PUREX	CERIUM-144	GAMMA SCAN	70.00	PCI/L	U
PUREX	CERIUM-144	GAMMA SCAN	60.00	PCI/L	U

FACILITY	ANALYTE	METHOD	RESULT	UNITS	QUALIFIER
PUREX	CESIUM-134	GAMMA SCAN	10.00	PCI/L	U
PUREX	CESIUM-134	GAMMA SCAN	10.00	PCI/L	U
PUREX	CESIUM-134	GAMMA SCAN	20.00	PCI/L	U
PUREX	CESIUM-134	GAMMA SCAN	10.00	PCI/L	U

FACILITY	ANALYTE	METHOD	RESULT	UNITS	QUALIFIER
PUREX	CESIUM-137	GAMMA SCAN	10.00	PCI/L	U

SUPPORTING DATA: STEAM CONDENSATE

FACILITY	ANALYTE	METHOD	RESULT	UNITS	QUALIFIER
PUREX	CESIUM-137	GAMMA SCAN	10.00	PCI/L	U
PUREX	CESIUM-137	GAMMA SCAN	20.00	PCI/L	U
PUREX	CESIUM-137	GAMMA SCAN	10.00	PCI/L	U

FACILITY	ANALYTE	METHOD	RESULT	UNITS	QUALIFIER
PUREX	CHEMICAL OXYGEN DEMAND	EPA-600 410.1	30.00	MG/L	U
PUREX	CHEMICAL OXYGEN DEMAND	EPA-600 410.1	30.00	MG/L	U
PUREX	CHEMICAL OXYGEN DEMAND	EPA-600 410.1	30.00	MG/L	U
PUREX	CHEMICAL OXYGEN DEMAND	EPA-600 410.1	30.00	MG/L	U

FACILITY	ANALYTE	METHOD	RESULT	UNITS	QUALIFIER
PUREX	CHLORDANE	SW-846 8080	0.50	UG/L	U
PUREX	CHLORDANE	SW-846 8080	0.50	UG/L	U
PUREX	CHLORDANE	SW-846 8080	0.50	UG/L	U
PUREX	CHLORDANE	SW-846 8080	0.50	UG/L	U

FACILITY	ANALYTE	METHOD	RESULT	UNITS	QUALIFIER
PUREX	CHLORIDE	EPA-600 300.0	0.20	MG/L	U
PUREX	CHLORIDE	EPA-600 300.0	0.20	MG/L	U
PUREX	CHLORIDE	EPA-600 300.0	0.20	MG/L	U
PUREX	CHLORIDE	EPA-600 300.0	0.20	MG/L	U

FACILITY	ANALYTE	METHOD	RESULT	UNITS	QUALIFIER
PUREX	CHLOROBENZENE	SW-846 8240	5.00	UG/L	U
PUREX	CHLOROBENZENE	SW-846 8240	5.00	UG/L	U
PUREX	CHLOROBENZENE	SW-846 8240	5.00	UG/L	U
PUREX	CHLOROBENZENE	SW-846 8240	5.00	UG/L	U

FACILITY	ANALYTE	METHOD	RESULT	UNITS	QUALIFIER
PUREX	CHLOROBENZILATE	SW-846 8270	10.00	UG/L	U
PUREX	CHLOROBENZILATE	SW-846 8270	10.00	UG/L	U
PUREX	CHLOROBENZILATE	SW-846 8270	10.00	UG/L	U
PUREX	CHLOROBENZILATE	SW-846 8270	10.00	UG/L	U

FACILITY	ANALYTE	METHOD	RESULT	UNITS	QUALIFIER
PUREX	CHLOROETHANE	SW-846 8240	10.00	UG/L	U
PUREX	CHLOROETHANE	SW-846 8240	10.00	UG/L	U
PUREX	CHLOROETHANE	SW-846 8240	10.00	UG/L	U
PUREX	CHLOROETHANE	SW-846 8240	10.00	UG/L	U

FACILITY	ANALYTE	METHOD	RESULT	UNITS	QUALIFIER
PUREX	CHLOROFORM	SW-846 8240	5.00	UG/L	U
PUREX	CHLOROFORM	SW-846 8240	5.00	UG/L	U
PUREX	CHLOROFORM	SW-846 8240	5.00	UG/L	U
PUREX	CHLOROFORM	SW-846 8240	5.00	UG/L	U

FACILITY	ANALYTE	METHOD	RESULT	UNITS	QUALIFIER
PUREX	CHLOROMETHANE	SW-846 8240	10.00	UG/L	U
PUREX	CHLOROMETHANE	SW-846 8240	10.00	UG/L	U
PUREX	CHLOROMETHANE	SW-846 8240	10.00	UG/L	U
PUREX	CHLOROMETHANE	SW-846 8240	10.00	UG/L	U

FACILITY	ANALYTE	METHOD	RESULT	UNITS	QUALIFIER
PUREX	CHLORTHALONIL	SW-846 8080	0.50	UG/L	U
PUREX	CHLORTHALONIL	SW-846 8080	0.50	UG/L	U
PUREX	CHLORTHALONIL	SW-846 8080	0.50	UG/L	U
PUREX	CHLORTHALONIL	SW-846 8080	0.50	UG/L	U

SUPPORTING DATA: STEAM CONDENSATE

FACILITY	ANALYTE	METHOD	RESULT	UNITS	QUALIFIER
PUREX	CHROMIUM	SW-846 6010	1.80	UG/L	
PUREX	CHROMIUM	SW-846 6010	2.10	UG/L	
PUREX	CHROMIUM	SW-846 6010	2.50	UG/L	
PUREX	CHROMIUM	SW-846 6010	2.50	UG/L	

FACILITY	ANALYTE	METHOD	RESULT	UNITS	QUALIFIER
PUREX	CHRYSENE	SW-846 8270	10.00	UG/L	U
PUREX	CHRYSENE	SW-846 8270	10.00	UG/L	U
PUREX	CHRYSENE	SW-846 8270	10.00	UG/L	U
PUREX	CHRYSENE	SW-846 8270	10.00	UG/L	U

FACILITY	ANALYTE	METHOD	RESULT	UNITS	QUALIFIER
PUREX	CIS-1,3-DICHLOROPROPENE	SW-846 8240	5.00	UG/L	U
PUREX	CIS-1,3-DICHLOROPROPENE	SW-846 8240	5.00	UG/L	U
PUREX	CIS-1,3-DICHLOROPROPENE	SW-846 8240	5.00	UG/L	U
PUREX	CIS-1,3-DICHLOROPROPENE	SW-846 8240	5.00	UG/L	U

FACILITY	ANALYTE	METHOD	RESULT	UNITS	QUALIFIER
PUREX	COBALT	SW-846 6010	2.00	UG/L	
PUREX	COBALT	SW-846 6010	2.60	UG/L	
PUREX	COBALT	SW-846 6010	2.90	UG/L	
PUREX	COBALT	SW-846 6010	2.10	UG/L	

FACILITY	ANALYTE	METHOD	RESULT	UNITS	QUALIFIER
PUREX	COBALT-58	GAMMA SCAN	10.00	PCI/L	U
PUREX	COBALT-58	GAMMA SCAN	20.00	PCI/L	U
PUREX	COBALT-58	GAMMA SCAN	20.00	PCI/L	U
PUREX	COBALT-58	GAMMA SCAN	10.00	PCI/L	U
PUREX	COBALT-58	GAMMA SCAN	10.00	PCI/L	U

FACILITY	ANALYTE	METHOD	RESULT	UNITS	QUALIFIER
PUREX	COBALT-60	GAMMA SCAN	20.00	PCI/L	U
PUREX	COBALT-60	GAMMA SCAN	20.00	PCI/L	U
PUREX	COBALT-60	GAMMA SCAN	10.00	PCI/L	U
PUREX	COBALT-60	GAMMA SCAN	10.00	PCI/L	U
PUREX	COBALT-60	GAMMA SCAN	20.00	PCI/L	U

FACILITY	ANALYTE	METHOD	RESULT	UNITS	QUALIFIER
PUREX	CONDUCTIVITY	SW-846 9050	6.00	UMHO	U
PUREX	CONDUCTIVITY	SW-846 9050	6.00	UMHO	U
PUREX	CONDUCTIVITY	SW-846 9050	6.00	UMHO	U
PUREX	CONDUCTIVITY	SW-846 9050	6.00	UMHO	U

FACILITY	ANALYTE	METHOD	RESULT	UNITS	QUALIFIER
PUREX	COPPER	SW-846 6010	2.20	UG/L	
PUREX	COPPER	SW-846 6010	2.50	UG/L	
PUREX	COPPER	SW-846 6010	2.70	UG/L	
PUREX	COPPER	SW-846 6010	310.00	UG/L	

FACILITY	ANALYTE	METHOD	RESULT	UNITS	QUALIFIER
PUREX	CYANIDE	EPA-600 335.2	10.00	UG/L	
PUREX	CYANIDE	EPA-600 335.2	0.02	MG/L	U
PUREX	CYANIDE	EPA-600 335.2	0.02	MG/L	U
PUREX	CYANIDE	SW-846 8270	10.00	UG/L	

FACILITY	ANALYTE	METHOD	RESULT	UNITS	QUALIFIER
PUREX	DALAPON	SW-846 8150	6.00	UG/L	U
PUREX	DALAPON	SW-846 8150	6.00	UG/L	U
PUREX	DALAPON	SW-846 8150	6.00	UG/L	U

SUPPORTING DATA: STEAM CONDENSATE

FACILITY	ANALYTE	METHOD	RESULT	UNITS	QUALIFIER
PUREX	DALAPON	SW-846 8150	6.00	UG/L	U

FACILITY	ANALYTE	METHOD	RESULT	UNITS	QUALIFIER
PUREX	DELTA-BHC	SW-846 8080	0.05	UG/L	U
PUREX	DELTA-BHC	SW-846 8080	0.05	UG/L	U
PUREX	DELTA-BHC	SW-846 8080	0.05	UG/L	U
PUREX	DELTA-BHC	SW-846 8080	0.05	UG/L	U

FACILITY	ANALYTE	METHOD	RESULT	UNITS	QUALIFIER
PUREX	DI-N-BUTYL PHTHALATE	SW-846 8270	10.00	UG/L	U
PUREX	DI-N-BUTYL PHTHALATE	SW-846 8270	10.00	UG/L	U
PUREX	DI-N-BUTYL PHTHALATE	SW-846 8270	10.00	UG/L	U
PUREX	DI-N-BUTYL PHTHALATE	SW-846 8270	10.00	UG/L	U

FACILITY	ANALYTE	METHOD	RESULT	UNITS	QUALIFIER
PUREX	DI-N-OCTYL PHTHALATE	SW-846 8270	10.00	UG/L	U
PUREX	DI-N-OCTYL PHTHALATE	SW-846 8270	10.00	UG/L	U
PUREX	DI-N-OCTYL PHTHALATE	SW-846 8270	10.00	UG/L	U
PUREX	DI-N-OCTYL PHTHALATE	SW-846 8270	10.00	UG/L	U

FACILITY	ANALYTE	METHOD	RESULT	UNITS	QUALIFIER
PUREX	DIALLATE (CIS OR TRANS)	SW-846 8270	20.00	UG/L	U
PUREX	DIALLATE (CIS OR TRANS)	SW-846 8270	20.00	UG/L	U
PUREX	DIALLATE (CIS OR TRANS)	SW-846 8270	20.00	UG/L	U
PUREX	DIALLATE (CIS OR TRANS)	SW-846 8270	20.00	UG/L	U

FACILITY	ANALYTE	METHOD	RESULT	UNITS	QUALIFIER
PUREX	DIBENZOFURAN	SW-846 8270	10.00	UG/L	U
PUREX	DIBENZOFURAN	SW-846 8270	10.00	UG/L	U
PUREX	DIBENZOFURAN	SW-846 8270	10.00	UG/L	U
PUREX	DIBENZOFURAN	SW-846 8270	10.00	UG/L	U

FACILITY	ANALYTE	METHOD	RESULT	UNITS	QUALIFIER
PUREX	DIBENZO[A,H]ANTHRACENE	SW-846 8270	10.00	UG/L	U
PUREX	DIBENZO[A,H]ANTHRACENE	SW-846 8270	10.00	UG/L	U
PUREX	DIBENZO[A,H]ANTHRACENE	SW-846 8270	10.00	UG/L	U
PUREX	DIBENZO[A,H]ANTHRACENE	SW-846 8270	10.00	UG/L	U

FACILITY	ANALYTE	METHOD	RESULT	UNITS	QUALIFIER
PUREX	DIBROMOCHLOROMETHANE	SW-846 8240	5.00	UG/L	U
PUREX	DIBROMOCHLOROMETHANE	SW-846 8240	5.00	UG/L	U
PUREX	DIBROMOCHLOROMETHANE	SW-846 8240	5.00	UG/L	U
PUREX	DIBROMOCHLOROMETHANE	SW-846 8240	5.00	UG/L	U

FACILITY	ANALYTE	METHOD	RESULT	UNITS	QUALIFIER
PUREX	DIBROMOETHANE	SW-846 8240	5.00	UG/L	U
PUREX	DIBROMOETHANE	SW-846 8240	5.00	UG/L	U
PUREX	DIBROMOETHANE	SW-846 8240	5.00	UG/L	U
PUREX	DIBROMOETHANE	SW-846 8240	5.00	UG/L	U

FACILITY	ANALYTE	METHOD	RESULT	UNITS	QUALIFIER
PUREX	DICAMBA	SW-846 8150	0.20	UG/L	U
PUREX	DICAMBA	SW-846 8150	0.20	UG/L	U
PUREX	DICAMBA	SW-846 8150	0.20	UG/L	U
PUREX	DICAMBA	SW-846 8150	0.20	UG/L	U

FACILITY	ANALYTE	METHOD	RESULT	UNITS	QUALIFIER
PUREX	DICHLORODIFLUOROMETHANE	SW-846 8240	10.00	UG/L	U
PUREX	DICHLORODIFLUOROMETHANE	SW-846 8240	10.00	UG/L	U

SUPPORTING DATA: STEAM CONDENSATE

FACILITY	ANALYTE	METHOD	RESULT	UNITS	QUALIFIER
PUREX	DICHLORODIFLUOROMETHANE	SW-846 8240	10.00	UG/L	U
PUREX	DICHLORODIFLUOROMETHANE	SW-846 8240	10.00	UG/L	U

FACILITY	ANALYTE	METHOD	RESULT	UNITS	QUALIFIER
PUREX	DICHLOROPROP	SW-846 8150	2.00	UG/L	U
PUREX	DICHLOROPROP	SW-846 8150	2.00	UG/L	U
PUREX	DICHLOROPROP	SW-846 8150	2.00	UG/L	U
PUREX	DICHLOROPROP	SW-846 8150	2.00	UG/L	U

FACILITY	ANALYTE	METHOD	RESULT	UNITS	QUALIFIER
PUREX	DICHLOROVOS	SW-846 8140	0.50	UG/L	U
PUREX	DICHLOROVOS	SW-846 8140	0.50	UG/L	U
PUREX	DICHLOROVOS	SW-846 8140	0.50	UG/L	U
PUREX	DICHLOROVOS	SW-846 8140	0.50	UG/L	U

FACILITY	ANALYTE	METHOD	RESULT	UNITS	QUALIFIER
PUREX	DIELDRIN	SW-846 8080	0.10	UG/L	U
PUREX	DIELDRIN	SW-846 8080	0.10	UG/L	U
PUREX	DIELDRIN	SW-846 8080	0.10	UG/L	U
PUREX	DIELDRIN	SW-846 8080	0.10	UG/L	U

FACILITY	ANALYTE	METHOD	RESULT	UNITS	QUALIFIER
PUREX	DIETHYL PHTHALATE	SW-846 8270	10.00	UG/L	U
PUREX	DIETHYL PHTHALATE	SW-846 8270	10.00	UG/L	U
PUREX	DIETHYL PHTHALATE	SW-846 8270	10.00	UG/L	U
PUREX	DIETHYL PHTHALATE	SW-846 8270	10.00	UG/L	U

FACILITY	ANALYTE	METHOD	RESULT	UNITS	QUALIFIER
PUREX	DIMETHOATE	SW-846 8140	2.00	UG/L	U
PUREX	DIMETHOATE	SW-846 8140	2.00	UG/L	U
PUREX	DIMETHOATE	SW-846 8140	2.00	UG/L	U
PUREX	DIMETHOATE	SW-846 8140	2.00	UG/L	U

FACILITY	ANALYTE	METHOD	RESULT	UNITS	QUALIFIER
PUREX	DIMETHYL PHTHALATE	SW-846 8270	10.00	UG/L	U
PUREX	DIMETHYL PHTHALATE	SW-846 8270	10.00	UG/L	U
PUREX	DIMETHYL PHTHALATE	SW-846 8270	10.00	UG/L	U
PUREX	DIMETHYL PHTHALATE	SW-846 8270	10.00	UG/L	U

FACILITY	ANALYTE	METHOD	RESULT	UNITS	QUALIFIER
PUREX	DIMETHYLAMINOAZOBENZENE	SW-846 8270	10.00	UG/L	U
PUREX	DIMETHYLAMINOAZOBENZENE	SW-846 8270	10.00	UG/L	U
PUREX	DIMETHYLAMINOAZOBENZENE	SW-846 8270	10.00	UG/L	U
PUREX	DIMETHYLAMINOAZOBENZENE	SW-846 8270	10.00	UG/L	U

FACILITY	ANALYTE	METHOD	RESULT	UNITS	QUALIFIER
PUREX	DINOSEB	SW-846 8150	1.20	UG/L	U
PUREX	DINOSEB	SW-846 8150	1.20	UG/L	U
PUREX	DINOSEB	SW-846 8150	1.20	UG/L	U
PUREX	DINOSEB	SW-846 8150	1.00	UG/L	U

FACILITY	ANALYTE	METHOD	RESULT	UNITS	QUALIFIER
PUREX	DISULFOTON	SW-846 8140	0.50	UG/L	U
PUREX	DISULFOTON	SW-846 8140	0.50	UG/L	U
PUREX	DISULFOTON	SW-846 8140	0.50	UG/L	U
PUREX	DISULFOTON	SW-846 8140	0.50	UG/L	U

FACILITY	ANALYTE	METHOD	RESULT	UNITS	QUALIFIER
PUREX	ENDOSULFAN I	SW-846 8080	0.05	UG/L	U

SUPPORTING DATA: STEAM CONDENSATE

FACILITY	ANALYTE	METHOD	RESULT	UNITS	QUALIFIER
PUREX	ENDOSULFAN I	SW-846 8080	0.05	UG/L	U
PUREX	ENDOSULFAN I	SW-846 8080	0.05	UG/L	U
PUREX	ENDOSULFAN I	SW-846 8080	0.05	UG/L	U

FACILITY	ANALYTE	METHOD	RESULT	UNITS	QUALIFIER
PUREX	ENDOSULFAN II	SW-846 8080	0.10	UG/L	U
PUREX	ENDOSULFAN II	SW-846 8080	0.10	UG/L	U
PUREX	ENDOSULFAN II	SW-846 8080	0.10	UG/L	U
PUREX	ENDOSULFAN II	SW-846 8080	0.10	UG/L	U

FACILITY	ANALYTE	METHOD	RESULT	UNITS	QUALIFIER
PUREX	ENDOSULFAN SULFATE	SW-846 8080	0.10	UG/L	U
PUREX	ENDOSULFAN SULFATE	SW-846 8080	0.10	UG/L	U
PUREX	ENDOSULFAN SULFATE	SW-846 8080	0.10	UG/L	U
PUREX	ENDOSULFAN SULFATE	SW-846 8080	0.10	UG/L	U

FACILITY	ANALYTE	METHOD	RESULT	UNITS	QUALIFIER
PUREX	ENDRIN	SW-846 8080	0.10	UG/L	U
PUREX	ENDRIN	SW-846 8080	0.10	UG/L	U
PUREX	ENDRIN	SW-846 8080	0.10	UG/L	U
PUREX	ENDRIN	SW-846 8080	0.10	UG/L	U

FACILITY	ANALYTE	METHOD	RESULT	UNITS	QUALIFIER
PUREX	ENDRIN ALDEHYDE	SW-846 8080	0.10	UG/L	U
PUREX	ENDRIN ALDEHYDE	SW-846 8080	0.10	UG/L	U
PUREX	ENDRIN ALDEHYDE	SW-846 8080	0.10	UG/L	U
PUREX	ENDRIN ALDEHYDE	SW-846 8080	0.10	UG/L	U
PUREX	ENDRIN ALDEHYDE	SW-846 8080	0.10	UG/L	U

FACILITY	ANALYTE	METHOD	RESULT	UNITS	QUALIFIER
PUREX	EPICHLOROHYDRIN	SW-846 8240	50.00	UG/L	U
PUREX	EPICHLOROHYDRIN	SW-846 8240	50.00	UG/L	U
PUREX	EPICHLOROHYDRIN	SW-846 8240	50.00	UG/L	U
PUREX	EPICHLOROHYDRIN	SW-846 8240	50.00	UG/L	U

FACILITY	ANALYTE	METHOD	RESULT	UNITS	QUALIFIER
PUREX	ETHYL BENZENE	SW-846 8240	5.00	UG/L	U
PUREX	ETHYL BENZENE	SW-846 8240	5.00	UG/L	U
PUREX	ETHYL BENZENE	SW-846 8240	5.00	UG/L	U
PUREX	ETHYL BENZENE	SW-846 8240	5.00	UG/L	U

FACILITY	ANALYTE	METHOD	RESULT	UNITS	QUALIFIER
PUREX	ETHYL METHACRYLATE	SW-846 8240	10.00	UG/L	U
PUREX	ETHYL METHACRYLATE	SW-846 8240	10.00	UG/L	U
PUREX	ETHYL METHACRYLATE	SW-846 8240	10.00	UG/L	U
PUREX	ETHYL METHACRYLATE	SW-846 8240	10.00	UG/L	U

FACILITY	ANALYTE	METHOD	RESULT	UNITS	QUALIFIER
PUREX	ETHYLACRYLATE	SW-846 8240	10.00	UG/L	U
PUREX	ETHYLACRYLATE	SW-846 8240	10.00	UG/L	U
PUREX	ETHYLACRYLATE	SW-846 8240	10.00	UG/L	U
PUREX	ETHYLACRYLATE	SW-846 8240	10.00	UG/L	U

FACILITY	ANALYTE	METHOD	RESULT	UNITS	QUALIFIER
PUREX	ETHYLMETHANESULFONATE	SW-846 8270	20.00	UG/L	U
PUREX	ETHYLMETHANESULFONATE	SW-846 8270	20.00	UG/L	U
PUREX	ETHYLMETHANESULFONATE	SW-846 8270	20.00	UG/L	U
PUREX	ETHYLMETHANESULFONATE	SW-846 8270	20.00	UG/L	U

SUPPORTING DATA: STEAM CONDENSATE

FACILITY	ANALYTE	METHOD	RESULT	UNITS	QUALIFIER
PUREX	EUROPIUM-152	GAMMA SCAN	20.00	PCI/L	U
PUREX	EUROPIUM-152	GAMMA SCAN	20.00	PCI/L	U
PUREX	EUROPIUM-152	GAMMA SCAN	30.00	PCI/L	U
PUREX	EUROPIUM-152	GAMMA SCAN	20.00	PCI/L	U

FACILITY	ANALYTE	METHOD	RESULT	UNITS	QUALIFIER
PUREX	EUROPIUM-154	GAMMA SCAN	10.00	PCI/L	U
PUREX	EUROPIUM-154	GAMMA SCAN	20.00	PCI/L	U
PUREX	EUROPIUM-154	GAMMA SCAN	20.00	PCI/L	U
PUREX	EUROPIUM-154	GAMMA SCAN	20.00	PCI/L	U

FACILITY	ANALYTE	METHOD	RESULT	UNITS	QUALIFIER
PUREX	EUROPIUM-155	GAMMA SCAN	30.00	PCI/L	U
PUREX	EUROPIUM-155	GAMMA SCAN	40.00	PCI/L	U
PUREX	EUROPIUM-155	GAMMA SCAN	40.00	PCI/L	U
PUREX	EUROPIUM-155	GAMMA SCAN	30.00	PCI/L	U

FACILITY	ANALYTE	METHOD	RESULT	UNITS	QUALIFIER
PUREX	FAMPHUR	SW-846 8140	2.00	UG/L	U
PUREX	FAMPHUR	SW-846 8140	2.00	UG/L	U
PUREX	FAMPHUR	SW-846 8140	2.00	UG/L	U
PUREX	FAMPHUR	SW-846 8140	2.00	UG/L	U

FACILITY	ANALYTE	METHOD	RESULT	UNITS	QUALIFIER
PUREX	FLUORANTHENE	SW-846 8270	10.00	UG/L	U
PUREX	FLUORANTHENE	SW-846 8270	10.00	UG/L	U
PUREX	FLUORANTHENE	SW-846 8270	10.00	UG/L	U
PUREX	FLUORANTHENE	SW-846 8270	10.00	UG/L	U

FACILITY	ANALYTE	METHOD	RESULT	UNITS	QUALIFIER
PUREX	FLUORENE	SW-846 8270	10.00	UG/L	U
PUREX	FLUORENE	SW-846 8270	10.00	UG/L	U
PUREX	FLUORENE	SW-846 8270	10.00	UG/L	U
PUREX	FLUORENE	SW-846 8270	10.00	UG/L	U

FACILITY	ANALYTE	METHOD	RESULT	UNITS	QUALIFIER
PUREX	FLUORIDE	EPA-600 300.0	0.10	MG/L	U
PUREX	FLUORIDE	EPA-600 300.0	0.10	MG/L	U
PUREX	FLUORIDE	EPA-600 300.0	0.10	MG/L	U

FACILITY	ANALYTE	METHOD	RESULT	UNITS	QUALIFIER
PUREX	FOLPET	SW-846 8080	1.00	UG/L	U
PUREX	FOLPET	SW-846 8080	1.00	UG/L	U
PUREX	FOLPET	SW-846 8080	1.00	UG/L	U
PUREX	FOLPET	SW-846 8080	1.00	UG/L	U

FACILITY	ANALYTE	METHOD	RESULT	UNITS	QUALIFIER
PUREX	GAMMA-BHC (LINDANE)	SW-846 8080	0.05	UG/L	U
PUREX	GAMMA-BHC (LINDANE)	SW-846 8080	0.05	UG/L	U
PUREX	GAMMA-BHC (LINDANE)	SW-846 8080	0.05	UG/L	U
PUREX	GAMMA-BHC (LINDANE)	SW-846 8080	0.05	UG/L	U

FACILITY	ANALYTE	METHOD	RESULT	UNITS	QUALIFIER
PUREX	GAMMA-CHLORDANE	SW-846 8080	0.05	UG/L	U
PUREX	GAMMA-CHLORDANE	SW-846 8080	0.05	UG/L	U
PUREX	GAMMA-CHLORDANE	SW-846 8080	0.05	UG/L	U
PUREX	GAMMA-CHLORDANE	SW-846 8080	0.05	UG/L	U

SUPPORTING DATA: STEAM CONDENSATE

FACILITY	ANALYTE	METHOD	RESULT	UNITS	QUALIFIER
PUREX	GROSS ALPHA ANALYSIS AT <60 PCI/L	GROSS ALPHA & BETA	3.00	PCI/L	U
PUREX	GROSS ALPHA ANALYSIS AT <60 PCI/L	GROSS ALPHA & BETA	1.00	PCI/L	U
PUREX	GROSS ALPHA ANALYSIS AT <60 PCI/L	GROSS ALPHA & BETA	1.00	PCI/L	U
PUREX	GROSS ALPHA ANALYSIS AT <60 PCI/L	GROSS ALPHA & BETA	2.00	PCI/L	U

FACILITY	ANALYTE	METHOD	RESULT	UNITS	QUALIFIER
PUREX	GROSS BETA ANALYSIS AT <60 PCI/L	GROSS ALPHA & BETA	3.00	PCI/L	U
PUREX	GROSS BETA ANALYSIS AT <60 PCI/L	GROSS ALPHA & BETA	2.00	PCI/L	U
PUREX	GROSS BETA ANALYSIS AT <60 PCI/L	GROSS ALPHA & BETA	2.00	PCI/L	U
PUREX	GROSS BETA ANALYSIS AT <60 PCI/L	GROSS ALPHA & BETA	2.00	PCI/L	U

FACILITY	ANALYTE	METHOD	RESULT	UNITS	QUALIFIER
PUREX	HEPTACHLOR	SW-846 8080	0.05	UG/L	U
PUREX	HEPTACHLOR	SW-846 8080	0.05	UG/L	U
PUREX	HEPTACHLOR	SW-846 8080	0.05	UG/L	U
PUREX	HEPTACHLOR	SW-846 8080	0.05	UG/L	U

FACILITY	ANALYTE	METHOD	RESULT	UNITS	QUALIFIER
PUREX	HEPTACHLOR EPOXIDE	SW-846 8080	0.05	UG/L	U
PUREX	HEPTACHLOR EPOXIDE	SW-846 8080	0.05	UG/L	U
PUREX	HEPTACHLOR EPOXIDE	SW-846 8080	0.05	UG/L	U
PUREX	HEPTACHLOR EPOXIDE	SW-846 8080	0.05	UG/L	U

FACILITY	ANALYTE	METHOD	RESULT	UNITS	QUALIFIER
PUREX	HEXACHLOROBENZENE	SW-846 8270	10.00	UG/L	U
PUREX	HEXACHLOROBENZENE	SW-846 8270	10.00	UG/L	U
PUREX	HEXACHLOROBENZENE	SW-846 8270	10.00	UG/L	U
PUREX	HEXACHLOROBENZENE	SW-846 8270	10.00	UG/L	U

FACILITY	ANALYTE	METHOD	RESULT	UNITS	QUALIFIER
PUREX	HEXACHLOROBUTADIENE	SW-846 8270	10.00	UG/L	U
PUREX	HEXACHLOROBUTADIENE	SW-846 8270	10.00	UG/L	U
PUREX	HEXACHLOROBUTADIENE	SW-846 8270	10.00	UG/L	U
PUREX	HEXACHLOROBUTADIENE	SW-846 8270	10.00	UG/L	U

FACILITY	ANALYTE	METHOD	RESULT	UNITS	QUALIFIER
PUREX	HEXACHLOROCYCLOPENTADIENE	SW-846 8270	10.00	UG/L	U
PUREX	HEXACHLOROCYCLOPENTADIENE	SW-846 8270	10.00	UG/L	U
PUREX	HEXACHLOROCYCLOPENTADIENE	SW-846 8270	10.00	UG/L	U
PUREX	HEXACHLOROCYCLOPENTADIENE	SW-846 8270	10.00	UG/L	U

FACILITY	ANALYTE	METHOD	RESULT	UNITS	QUALIFIER
PUREX	HEXACHLOROETHANE	SW-846 8270	10.00	UG/L	U
PUREX	HEXACHLOROETHANE	SW-846 8270	10.00	UG/L	U
PUREX	HEXACHLOROETHANE	SW-846 8270	10.00	UG/L	U
PUREX	HEXACHLOROETHANE	SW-846 8270	10.00	UG/L	U

FACILITY	ANALYTE	METHOD	RESULT	UNITS	QUALIFIER
PUREX	HEXACHLOROPHENE	SW-846 8270	100.00	UG/L	U
PUREX	HEXACHLOROPHENE	SW-846 8270	100.00	UG/L	U
PUREX	HEXACHLOROPHENE	SW-846 8270	100.00	UG/L	U
PUREX	HEXACHLOROPHENE	SW-846 8270	100.00	UG/L	U

SUPPORTING DATA: STEAM CONDENSATE

FACILITY	ANALYTE	METHOD	RESULT	UNITS	QUALIFIER
PUREX	HEXACHLOROPROPENE	SW-846 8270	20.00	UG/L	U
PUREX	HEXACHLOROPROPENE	SW-846 8270	20.00	UG/L	U
PUREX	HEXACHLOROPROPENE	SW-846 8270	20.00	UG/L	U
PUREX	HEXACHLOROPROPENE	SW-846 8270	20.00	UG/L	U

FACILITY	ANALYTE	METHOD	RESULT	UNITS	QUALIFIER
PUREX	INDENO[1,2,3-CD]PYRENE	SW-846 8270	10.00	UG/L	U
PUREX	INDENO[1,2,3-CD]PYRENE	SW-846 8270	10.00	UG/L	U
PUREX	INDENO[1,2,3-CD]PYRENE	SW-846 8270	10.00	UG/L	U
PUREX	INDENO[1,2,3-CD]PYRENE	SW-846 8270	10.00	UG/L	U

FACILITY	ANALYTE	METHOD	RESULT	UNITS	QUALIFIER
PUREX	IRON	SW-846 6010	42.40	UG/L	

FACILITY	ANALYTE	METHOD	RESULT	UNITS	QUALIFIER
PUREX	IRON-59	GAMMA SCAN	30.00	PCI/L	U
PUREX	IRON-59	GAMMA SCAN	50.00	PCI/L	U
PUREX	IRON-59	GAMMA SCAN	40.00	PCI/L	U
PUREX	IRON-59	GAMMA SCAN	30.00	PCI/L	U

FACILITY	ANALYTE	METHOD	RESULT	UNITS	QUALIFIER
PUREX	ISOBUTYL ALCOHOL	SW-846 8240	200.00	UG/L	U
PUREX	ISOBUTYL ALCOHOL	SW-846 8240	200.00	UG/L	U
PUREX	ISOBUTYL ALCOHOL	SW-846 8240	200.00	UG/L	U
PUREX	ISOBUTYL ALCOHOL	SW-846 8240	200.00	UG/L	U

FACILITY	ANALYTE	METHOD	RESULT	UNITS	QUALIFIER
PUREX	ISODRIN	SW-846 8270	20.00	UG/L	U
PUREX	ISODRIN	SW-846 8270	20.00	UG/L	U
PUREX	ISODRIN	SW-846 8270	20.00	UG/L	U
PUREX	ISODRIN	SW-846 8270	20.00	UG/L	U

FACILITY	ANALYTE	METHOD	RESULT	UNITS	QUALIFIER
PUREX	ISOPHORONE	SW-846 8270	10.00	UG/L	U
PUREX	ISOPHORONE	SW-846 8270	10.00	UG/L	U
PUREX	ISOPHORONE	SW-846 8270	10.00	UG/L	U
PUREX	ISOPHORONE	SW-846 8270	10.00	UG/L	U

FACILITY	ANALYTE	METHOD	RESULT	UNITS	QUALIFIER
PUREX	ISOSAFROLE	SW-846 8270	10.00	UG/L	U
PUREX	ISOSAFROLE	SW-846 8270	10.00	UG/L	U
PUREX	ISOSAFROLE	SW-846 8270	10.00	UG/L	U
PUREX	ISOSAFROLE	SW-846 8270	10.00	UG/L	U

FACILITY	ANALYTE	METHOD	RESULT	UNITS	QUALIFIER
PUREX	KEPONE	SW-846 8270	50.00	UG/L	U
PUREX	KEPONE	SW-846 8270	50.00	UG/L	U
PUREX	KEPONE	SW-846 8270	50.00	UG/L	U
PUREX	KEPONE	SW-846 8270	50.00	UG/L	U

FACILITY	ANALYTE	METHOD	RESULT	UNITS	QUALIFIER
PUREX	LEAD	SW-846 7421	26.20	UG/L	
PUREX	LEAD	SW-846 7421	14.90	UG/L	
PUREX	LEAD	SW-846 7421	11.70	UG/L	
PUREX	LEAD	SW-846 7421	40.70	UG/L	N*

FACILITY	ANALYTE	METHOD	RESULT	UNITS	QUALIFIER
PUREX	MAGNESIUM	SW-846 6010	26.60	UG/L	

SUPPORTING DATA: STEAM CONDENSATE

FACILITY	ANALYTE	METHOD	RESULT	UNITS	QUALIFIER
PUREX	MANGANESE	SW-846 6010	1.20	UG/L	

FACILITY	ANALYTE	METHOD	RESULT	UNITS	QUALIFIER
PUREX	MANGANESE-54	GAMMA SCAN	10.00	PCI/L	U
PUREX	MANGANESE-54	GAMMA SCAN	10.00	PCI/L	U
PUREX	MANGANESE-54	GAMMA SCAN	10.00	PCI/L	U
PUREX	MANGANESE-54	GAMMA SCAN	10.00	PCI/L	U

FACILITY	ANALYTE	METHOD	RESULT	UNITS	QUALIFIER
PUREX	MCPA	SW-846 8150	20.00	UG/L	U
PUREX	MCPA	SW-846 8150	200.00	UG/L	U
PUREX	MCPA	SW-846 8150	200.00	UG/L	U
PUREX	MCPA	SW-846 8150	200.00	UG/L	U

FACILITY	ANALYTE	METHOD	RESULT	UNITS	QUALIFIER
PUREX	MCPP	SW-846 8150	20.00	UG/L	U
PUREX	MCPP	SW-846 8150	200.00	UG/L	U
PUREX	MCPP	SW-846 8150	200.00	UG/L	U
PUREX	MCPP	SW-846 8150	200.00	UG/L	U

FACILITY	ANALYTE	METHOD	RESULT	UNITS	QUALIFIER
PUREX	MERCURY	SW-846 7470	0.10	UG/L	
PUREX	MERCURY	SW-846 7470	0.10	UG/L	
PUREX	MERCURY	SW-846 7470	0.10	UG/L	
PUREX	MERCURY	SW-846 7470	0.10	UG/L	

FACILITY	ANALYTE	METHOD	RESULT	UNITS	QUALIFIER
PUREX	METHACRYLONITRILE	SW-846 8240	20.00	UG/L	U
PUREX	METHACRYLONITRILE	SW-846 8240	20.00	UG/L	U
PUREX	METHACRYLONITRILE	SW-846 8240	20.00	UG/L	U
PUREX	METHACRYLONITRILE	SW-846 8240	20.00	UG/L	U

FACILITY	ANALYTE	METHOD	RESULT	UNITS	QUALIFIER
PUREX	METHAPYRILENE	SW-846 8270	10.00	UG/L	U
PUREX	METHAPYRILENE	SW-846 8270	10.00	UG/L	U
PUREX	METHAPYRILENE	SW-846 8270	10.00	UG/L	U
PUREX	METHAPYRILENE	SW-846 8270	10.00	UG/L	U

FACILITY	ANALYTE	METHOD	RESULT	UNITS	QUALIFIER
PUREX	METHOXYCHLOR	SW-846 8080	0.50	UG/L	U
PUREX	METHOXYCHLOR	SW-846 8080	0.50	UG/L	U
PUREX	METHOXYCHLOR	SW-846 8080	0.50	UG/L	U
PUREX	METHOXYCHLOR	SW-846 8080	0.50	UG/L	U

FACILITY	ANALYTE	METHOD	RESULT	UNITS	QUALIFIER
PUREX	METHYLENE CHLORIDE	SW-846 8240	5.00	UG/L	U
PUREX	METHYLENE CHLORIDE	SW-846 8240	10.00	UG/L	U
PUREX	METHYLENE CHLORIDE	SW-846 8240	5.00	UG/L	U
PUREX	METHYLENE CHLORIDE	SW-846 8240	2.00	UG/L	J

FACILITY	ANALYTE	METHOD	RESULT	UNITS	QUALIFIER
PUREX	METHYLMETHACRYLATE	SW-846 8240	10.00	UG/L	U
PUREX	METHYLMETHACRYLATE	SW-846 8240	10.00	UG/L	U
PUREX	METHYLMETHACRYLATE	SW-846 8240	10.00	UG/L	U
PUREX	METHYLMETHACRYLATE	SW-846 8240	10.00	UG/L	U
PUREX	METHYLMETHACRYLATE	SW-846 8240	10.00	UG/L	U
PUREX	METHYLMETHACRYLATE	SW-846 8240	10.00	UG/L	U

SUPPORTING DATA: STEAM CONDENSATE

FACILITY	ANALYTE	METHOD	RESULT	UNITS	QUALIFIER
PUREX	METHYLMETHANESULFONATE	SW-846 8270	10.00	UG/L	U
PUREX	METHYLMETHANESULFONATE	SW-846 8270	10.00	UG/L	U
PUREX	METHYLMETHANESULFONATE	SW-846 8270	10.00	UG/L	U
PUREX	METHYLMETHANESULFONATE	SW-846 8270	10.00	UG/L	U

FACILITY	ANALYTE	METHOD	RESULT	UNITS	QUALIFIER
PUREX	MIREX	SW-846 8080	0.10	UG/L	U
PUREX	MIREX	SW-846 8080	0.10	UG/L	U
PUREX	MIREX	SW-846 8080	0.10	UG/L	U
PUREX	MIREX	SW-846 8080	0.10	UG/L	U

FACILITY	ANALYTE	METHOD	RESULT	UNITS	QUALIFIER
PUREX	N-NITROSO-METHYLETHYLAMINE	SW-846 8270	20.00	UG/L	U
PUREX	N-NITROSO-METHYLETHYLAMINE	SW-846 8270	20.00	UG/L	U
PUREX	N-NITROSO-METHYLETHYLAMINE	SW-846 8270	20.00	UG/L	U
PUREX	N-NITROSO-METHYLETHYLAMINE	SW-846 8270	20.00	UG/L	U

FACILITY	ANALYTE	METHOD	RESULT	UNITS	QUALIFIER
PUREX	N-NITROSO-MORPHOLINE	SW-846 8270	1,000.00	UG/L	U
PUREX	N-NITROSO-MORPHOLINE	SW-846 8270	1,000.00	UG/L	U
PUREX	N-NITROSO-MORPHOLINE	SW-846 8270	1,000.00	UG/L	U
PUREX	N-NITROSO-MORPHOLINE	SW-846 8270	1,000.00	UG/L	U

FACILITY	ANALYTE	METHOD	RESULT	UNITS	QUALIFIER
PUREX	N-NITROSODI-N-PROPYLAMINE	SW-846 8270	10.00	UG/L	U
PUREX	N-NITROSODI-N-PROPYLAMINE	SW-846 8270	10.00	UG/L	U
PUREX	N-NITROSODI-N-PROPYLAMINE	SW-846 8270	10.00	UG/L	U
PUREX	N-NITROSODI-N-PROPYLAMINE	SW-846 8270	10.00	UG/L	U

FACILITY	ANALYTE	METHOD	RESULT	UNITS	QUALIFIER
PUREX	N-NITROSODIBUTYLAMINE	SW-846 8270	10.00	UG/L	U
PUREX	N-NITROSODIBUTYLAMINE	SW-846 8270	10.00	UG/L	U
PUREX	N-NITROSODIBUTYLAMINE	SW-846 8270	10.00	UG/L	U
PUREX	N-NITROSODIBUTYLAMINE	SW-846 8270	10.00	UG/L	U

FACILITY	ANALYTE	METHOD	RESULT	UNITS	QUALIFIER
PUREX	N-NITROSODIETHYLAMINE	SW-846 8270	20.00	UG/L	U
PUREX	N-NITROSODIETHYLAMINE	SW-846 8270	20.00	UG/L	U
PUREX	N-NITROSODIETHYLAMINE	SW-846 8270	20.00	UG/L	U
PUREX	N-NITROSODIETHYLAMINE	SW-846 8270	20.00	UG/L	U

FACILITY	ANALYTE	METHOD	RESULT	UNITS	QUALIFIER
PUREX	N-NITROSODIMETHYLAMINE	SW-846 8270	20.00	UG/L	U
PUREX	N-NITROSODIMETHYLAMINE	SW-846 8270	10.00	UG/L	U
PUREX	N-NITROSODIMETHYLAMINE	SW-846 8270	10.00	UG/L	U
PUREX	N-NITROSODIMETHYLAMINE	SW-846 8270	10.00	UG/L	U

FACILITY	ANALYTE	METHOD	RESULT	UNITS	QUALIFIER
PUREX	N-NITROSODIPHYENYLAMINE	SW-846 8270	10.00	UG/L	U
PUREX	N-NITROSODIPHYENYLAMINE	SW-846 8270	10.00	UG/L	U
PUREX	N-NITROSODIPHYENYLAMINE	SW-846 8270	10.00	UG/L	U
PUREX	N-NITROSODIPHYENYLAMINE	SW-846 8270	10.00	UG/L	U

FACILITY	ANALYTE	METHOD	RESULT	UNITS	QUALIFIER
PUREX	N-NITROSOPIPERIDINE	SW-846 8270	20.00	UG/L	U
PUREX	N-NITROSOPIPERIDINE	SW-846 8270	20.00	UG/L	U
PUREX	N-NITROSOPIPERIDINE	SW-846 8270	20.00	UG/L	U
PUREX	N-NITROSOPIPERIDINE	SW-846 8270	20.00	UG/L	U

SUPPORTING DATA: STEAM CONDENSATE

FACILITY	ANALYTE	METHOD	RESULT	UNITS	QUALIFIER
PUREX	N-NITROSOPYRROLIDINE	SW-846 8270	40.00	UG/L	U
PUREX	N-NITROSOPYRROLIDINE	SW-846 8270	40.00	UG/L	U
PUREX	N-NITROSOPYRROLIDINE	SW-846 8270	40.00	UG/L	U
PUREX	N-NITROSOPYRROLIDINE	SW-846 8270	40.00	UG/L	U

FACILITY	ANALYTE	METHOD	RESULT	UNITS	QUALIFIER
PUREX	NAPHTHALENE	SW-846 8270	10.00	UG/L	U
PUREX	NAPHTHALENE	SW-846 8270	10.00	UG/L	U
PUREX	NAPHTHALENE	SW-846 8270	10.00	UG/L	U
PUREX	NAPHTHALENE	SW-846 8270	10.00	UG/L	U

FACILITY	ANALYTE	METHOD	RESULT	UNITS	QUALIFIER
PUREX	NICKEL	SW-846 6010	3.70	UG/L	
PUREX	NICKEL	SW-846 6010	3.40	UG/L	
PUREX	NICKEL	SW-846 6010	4.40	UG/L	
PUREX	NICKEL	SW-846 6010	8.80	UG/L	

FACILITY	ANALYTE	METHOD	RESULT	UNITS	QUALIFIER
PUREX	NITROBENZENE	SW-846 8270	10.00	UG/L	U
PUREX	NITROBENZENE	SW-846 8270	10.00	UG/L	U
PUREX	NITROBENZENE	SW-846 8270	10.00	UG/L	U
PUREX	NITROBENZENE	SW-846 8270	10.00	UG/L	U

FACILITY	ANALYTE	METHOD	RESULT	UNITS	QUALIFIER
PUREX	NITROGEN IN NITRATE	EPA-600 300.0	0.20	MG/L	U
PUREX	NITROGEN IN NITRATE	EPA-600 300.0	0.20	MG/L	U
PUREX	NITROGEN IN NITRATE	EPA-600 300.0	0.20	MG/L	U
PUREX	NITROGEN IN NITRATE	EPA-600 300.0	0.20	MG/L	U

FACILITY	ANALYTE	METHOD	RESULT	UNITS	QUALIFIER
PUREX	NITROGEN IN NITRATE AND NITRITE	EPA-600 353.2	0.25	MG/L	U
PUREX	NITROGEN IN NITRATE AND NITRITE	EPA-600 353.2	0.25	MG/L	U
PUREX	NITROGEN IN NITRATE AND NITRITE	EPA-600 353.2	0.25	MG/L	U
PUREX	NITROGEN IN NITRATE AND NITRITE	EPA-600 353.2	0.10	MG/L	U

FACILITY	ANALYTE	METHOD	RESULT	UNITS	QUALIFIER
PUREX	NITROGEN IN NITRITE	EPA-600 300.0	0.10	MG/L	U
PUREX	NITROGEN IN NITRITE	EPA-600 300.0	0.10	MG/L	U
PUREX	NITROGEN IN NITRITE	EPA-600 300.0	0.10	MG/L	U
PUREX	NITROGEN IN NITRITE	EPA-600 300.0	0.10	MG/L	U

FACILITY	ANALYTE	METHOD	RESULT	UNITS	QUALIFIER
PUREX	O-TOLUIDINE	SW-846 8270	10.00	UG/L	U
PUREX	O-TOLUIDINE	SW-846 8270	10.00	UG/L	U
PUREX	O-TOLUIDINE	SW-846 8270	10.00	UG/L	U
PUREX	O-TOLUIDINE	SW-846 8270	10.00	UG/L	U

FACILITY	ANALYTE	METHOD	RESULT	UNITS	QUALIFIER
PUREX	OIL & GREASE	SW-846 9070	5.00	MG/L	U
PUREX	OIL & GREASE	SW-846 9070	5.00	MG/L	U
PUREX	OIL & GREASE	SW-846 9070	5.00	MG/L	U
PUREX	OIL & GREASE	SW-846 9070	5.00	MG/L	U

FACILITY	ANALYTE	METHOD	RESULT	UNITS	QUALIFIER
PUREX	PARATHION	SW-846 8140	0.50	UG/L	U
PUREX	PARATHION	SW-846 8140	0.50	UG/L	U
PUREX	PARATHION	SW-846 8140	0.50	UG/L	U
PUREX	PARATHION	SW-846 8140	0.50	UG/L	U

SUPPORTING DATA: STEAM CONDENSATE

FACILITY	ANALYTE	METHOD	RESULT	UNITS	QUALIFIER
PUREX	PARATHION-METHYL	SW-846 8140	1.00	UG/L	U
PUREX	PARATHION-METHYL	SW-846 8140	1.00	UG/L	U
PUREX	PARATHION-METHYL	SW-846 8140	1.00	UG/L	U
PUREX	PARATHION-METHYL	SW-846 8140	1.00	UG/L	U

FACILITY	ANALYTE	METHOD	RESULT	UNITS	QUALIFIER
PUREX	PBBS	SW-846 8080	1.00	UG/L	U
PUREX	PBBS	SW-846 8080	1.00	UG/L	U
PUREX	PBBS	SW-846 8080	1.00	UG/L	U
PUREX	PBBS	SW-846 8080	1.00	UG/L	U

FACILITY	ANALYTE	METHOD	RESULT	UNITS	QUALIFIER
PUREX	PENTACHLOROBENZENE	SW-846 8270	20.00	UG/L	U
PUREX	PENTACHLOROBENZENE	SW-846 8270	20.00	UG/L	U
PUREX	PENTACHLOROBENZENE	SW-846 8270	20.00	UG/L	U
PUREX	PENTACHLOROBENZENE	SW-846 8270	20.00	UG/L	U

FACILITY	ANALYTE	METHOD	RESULT	UNITS	QUALIFIER
PUREX	PENTACHLOROETHANE	SW-846 8240	10.00	UG/L	U
PUREX	PENTACHLOROETHANE	SW-846 8240	10.00	UG/L	U
PUREX	PENTACHLOROETHANE	SW-846 8240	10.00	UG/L	U
PUREX	PENTACHLOROETHANE	SW-846 8240	10.00	UG/L	U

FACILITY	ANALYTE	METHOD	RESULT	UNITS	QUALIFIER
PUREX	PENTACHLORONITROBENZENE	SW-846 8270	50.00	UG/L	U
PUREX	PENTACHLORONITROBENZENE	SW-846 8270	50.00	UG/L	U
PUREX	PENTACHLORONITROBENZENE	SW-846 8270	50.00	UG/L	U
PUREX	PENTACHLORONITROBENZENE	SW-846 8270	50.00	UG/L	U

FACILITY	ANALYTE	METHOD	RESULT	UNITS	QUALIFIER
PUREX	PENTACHLOROPHENOL	SW-846 8270	50.00	UG/L	U
PUREX	PENTACHLOROPHENOL	SW-846 8270	50.00	UG/L	U
PUREX	PENTACHLOROPHENOL	SW-846 8270	50.00	UG/L	U
PUREX	PENTACHLOROPHENOL	SW-846 8270	50.00	UG/L	U

FACILITY	ANALYTE	METHOD	RESULT	UNITS	QUALIFIER
PUREX	PH MEASUREMENT	SW-846 9040	5.90	PH	
PUREX	PH MEASUREMENT	SW-846 9040	5.90	PH	
PUREX	PH MEASUREMENT	SW-846 9040	5.80	PH	
PUREX	PH MEASUREMENT	SW-846 9040	4.90	PH	

FACILITY	ANALYTE	METHOD	RESULT	UNITS	QUALIFIER
PUREX	PHENACETIN	SW-846 8270	20.00	UG/L	U
PUREX	PHENACETIN	SW-846 8270	20.00	UG/L	U
PUREX	PHENACETIN	SW-846 8270	20.00	UG/L	U
PUREX	PHENACETIN	SW-846 8270	20.00	UG/L	U

FACILITY	ANALYTE	METHOD	RESULT	UNITS	QUALIFIER
PUREX	PHENANTHRENE	SW-846 8270	10.00	UG/L	U
PUREX	PHENANTHRENE	SW-846 8270	10.00	UG/L	U
PUREX	PHENANTHRENE	SW-846 8270	10.00	UG/L	U
PUREX	PHENANTHRENE	SW-846 8270	10.00	UG/L	U

FACILITY	ANALYTE	METHOD	RESULT	UNITS	QUALIFIER
PUREX	PHENOL	SW-846 8270	10.00	UG/L	U
PUREX	PHENOL	SW-846 8270	10.00	UG/L	U
PUREX	PHENOL	SW-846 8270	10.00	UG/L	U
PUREX	PHENOL	SW-846 9065	0.05	MG/L	U
PUREX	PHENOL	SW-846 9065	0.05	MG/L	U

SUPPORTING DATA: STEAM CONDENSATE

FACILITY	ANALYTE	METHOD	RESULT	UNITS	QUALIFIER
PUREX	PHENOL	SW-846 9065	0.05	MG/L	U
PUREX	PHENOL	SW-846 9065	0.05	MG/L	U

FACILITY	ANALYTE	METHOD	RESULT	UNITS	QUALIFIER
PUREX	PHORATE	SW-846 8140	0.50	UG/L	U
PUREX	PHORATE	SW-846 8140	0.50	UG/L	U
PUREX	PHORATE	SW-846 8140	0.50	UG/L	U
PUREX	PHORATE	SW-846 8140	0.50	UG/L	U

FACILITY	ANALYTE	METHOD	RESULT	UNITS	QUALIFIER
PUREX	PLUTONIUM-238	PLUTONIUM	0.07	PCI/L	U
PUREX	PLUTONIUM-238	PLUTONIUM	0.02	PCI/L	U
PUREX	PLUTONIUM-238	PLUTONIUM	0.03	PCI/L	U
PUREX	PLUTONIUM-238	PLUTONIUM	0.04	PCI/L	U

FACILITY	ANALYTE	METHOD	RESULT	UNITS	QUALIFIER
PUREX	PLUTONIUM-239/240	PLUTONIUM	0.02	PCI/L	U
PUREX	PLUTONIUM-239/240	PLUTONIUM	0.74	PCI/L	
PUREX	PLUTONIUM-239/240	PLUTONIUM	0.02	PCI/L	U
PUREX	PLUTONIUM-239/240	PLUTONIUM	0.02	PCI/L	U

FACILITY	ANALYTE	METHOD	RESULT	UNITS	QUALIFIER
PUREX	PLUTONIUM-241	PLUTONIUM	8.00	PCI/L	U
PUREX	PLUTONIUM-241	PLUTONIUM	5.00	PCI/L	U
PUREX	PLUTONIUM-241	PLUTONIUM	5.00	PCI/L	U
PUREX	PLUTONIUM-241	PLUTONIUM	4.20	PCI/L	J

FACILITY	ANALYTE	METHOD	RESULT	UNITS	QUALIFIER
PUREX	POTASSIUM	SW-846 6010	85.50	UG/L	

FACILITY	ANALYTE	METHOD	RESULT	UNITS	QUALIFIER
PUREX	POTASSIUM-40	GAMMA SCAN	100.00	PCI/L	U
PUREX	POTASSIUM-40	GAMMA SCAN	100.00	PCI/L	U
PUREX	POTASSIUM-40	GAMMA SCAN	300.00	PCI/L	U
PUREX	POTASSIUM-40	GAMMA SCAN	100.00	PCI/L	U

FACILITY	ANALYTE	METHOD	RESULT	UNITS	QUALIFIER
PUREX	PRONAMIDE	SW-846 8270	10.00	UG/L	U
PUREX	PRONAMIDE	SW-846 8270	10.00	UG/L	U
PUREX	PRONAMIDE	SW-846 8270	10.00	UG/L	U
PUREX	PRONAMIDE	SW-846 8270	10.00	UG/L	U

FACILITY	ANALYTE	METHOD	RESULT	UNITS	QUALIFIER
PUREX	PROPIONITRILE	SW-846 8240	100.00	UG/L	U
PUREX	PROPIONITRILE	SW-846 8240	100.00	UG/L	U
PUREX	PROPIONITRILE	SW-846 8240	100.00	UG/L	U
PUREX	PROPIONITRILE	SW-846 8240	100.00	UG/L	U

FACILITY	ANALYTE	METHOD	RESULT	UNITS	QUALIFIER
PUREX	PROPYLENE OXIDE	SW-846 8240	50.00	UG/L	U
PUREX	PROPYLENE OXIDE	SW-846 8240	50.00	UG/L	U
PUREX	PROPYLENE OXIDE	SW-846 8240	50.00	UG/L	U
PUREX	PROPYLENE OXIDE	SW-846 8240	50.00	UG/L	U

FACILITY	ANALYTE	METHOD	RESULT	UNITS	QUALIFIER
PUREX	PYRENE	SW-846 8270	10.00	UG/L	U
PUREX	PYRENE	SW-846 8270	10.00	UG/L	U
PUREX	PYRENE	SW-846 8270	10.00	UG/L	U
PUREX	PYRENE	SW-846 8270	10.00	UG/L	U

SUPPORTING DATA: STEAM CONDENSATE

FACILITY	ANALYTE	METHOD	RESULT	UNITS	QUALIFIER
PUREX	PYRIDINE	SW-846 8270	10.00	UG/L	U
PUREX	PYRIDINE	SW-846 8270	10.00	UG/L	U
PUREX	PYRIDINE	SW-846 8270	10.00	UG/L	U
PUREX	PYRIDINE	SW-846 8270	10.00	UG/L	U

FACILITY	ANALYTE	METHOD	RESULT	UNITS	QUALIFIER
PUREX	RADIUM-226	GAMMA SCAN	20.00	PCI/L	U
PUREX	RADIUM-226	GAMMA SCAN	30.00	PCI/L	U
PUREX	RADIUM-226	GAMMA SCAN	30.00	PCI/L	U
PUREX	RADIUM-226	GAMMA SCAN	20.00	PCI/L	U

FACILITY	ANALYTE	METHOD	RESULT	UNITS	QUALIFIER
PUREX	RADIUM-228	GAMMA SCAN	60.00	PCI/L	U
PUREX	RADIUM-228	GAMMA SCAN	50.00	PCI/L	U
PUREX	RADIUM-228	GAMMA SCAN	60.00	PCI/L	U
PUREX	RADIUM-228	GAMMA SCAN	50.00	PCI/L	U

FACILITY	ANALYTE	METHOD	RESULT	UNITS	QUALIFIER
PUREX	RUTHENIUM-103	GAMMA SCAN	10.00	PCI/L	U
PUREX	RUTHENIUM-103	GAMMA SCAN	20.00	PCI/L	U
PUREX	RUTHENIUM-103	GAMMA SCAN	20.00	PCI/L	U
PUREX	RUTHENIUM-103	GAMMA SCAN	10.00	PCI/L	U

FACILITY	ANALYTE	METHOD	RESULT	UNITS	QUALIFIER
PUREX	RUTHENIUM-106	GAMMA SCAN	100.00	PCI/L	U
PUREX	RUTHENIUM-106	GAMMA SCAN	100.00	PCI/L	U
PUREX	RUTHENIUM-106	GAMMA SCAN	100.00	PCI/L	U
PUREX	RUTHENIUM-106	GAMMA SCAN	90.00	PCI/L	U

FACILITY	ANALYTE	METHOD	RESULT	UNITS	QUALIFIER
PUREX	SAFROLE	SW-846 8270	10.00	UG/L	U
PUREX	SAFROLE	SW-846 8270	10.00	UG/L	U
PUREX	SAFROLE	SW-846 8270	10.00	UG/L	U
PUREX	SAFROLE	SW-846 8270	10.00	UG/L	U

FACILITY	ANALYTE	METHOD	RESULT	UNITS	QUALIFIER
PUREX	SELENIUM	SW-846 7740	2.30	UG/L	
PUREX	SELENIUM	SW-846 7740	3.10	UG/L	
PUREX	SELENIUM	SW-846 7740	2.70	UG/L	WN
PUREX	SELENIUM	SW-846 7740	1.40	UG/L	WN

FACILITY	ANALYTE	METHOD	RESULT	UNITS	QUALIFIER
PUREX	SILVER	SW-846 6010	3.40	UG/L	
PUREX	SILVER	SW-846 6010	2.60	UG/L	
PUREX	SILVER	SW-846 6010	2.10	UG/L	
PUREX	SILVER	SW-846 6010	3.60	UG/L	

FACILITY	ANALYTE	METHOD	RESULT	UNITS	QUALIFIER
PUREX	SODIUM	SW-846 6010	37.00	UG/L	

FACILITY	ANALYTE	METHOD	RESULT	UNITS	QUALIFIER
PUREX	SODIUM-22	GAMMA SCAN	10.00	PCI/L	U
PUREX	SODIUM-22	GAMMA SCAN	20.00	PCI/L	U
PUREX	SODIUM-22	GAMMA SCAN	10.00	PCI/L	U

FACILITY	ANALYTE	METHOD	RESULT	UNITS	QUALIFIER
PUREX	STRONTIUM-90	SR-89/90	0.90	PCI/L	U
PUREX	STRONTIUM-90	SR-89/90	0.90	PCI/L	U

SUPPORTING DATA: STEAM CONDENSATE

FACILITY	ANALYTE	METHOD	RESULT	UNITS	QUALIFIER
PUREX	STRONTIUM-90	SR-89/90	1.00	PCI/L	U
PUREX	STRONTIUM-90	SR-89/90	0.90	PCI/L	U

FACILITY	ANALYTE	METHOD	RESULT	UNITS	QUALIFIER
PUREX	STYRENE	SW-846 8240	5.00	UG/L	U
PUREX	STYRENE	SW-846 8240	5.00	UG/L	U
PUREX	STYRENE	SW-846 8240	5.00	UG/L	U
PUREX	STYRENE	SW-846 8240	5.00	UG/L	U

FACILITY	ANALYTE	METHOD	RESULT	UNITS	QUALIFIER
PUREX	SULFIDE	SW-846 9030	1.00	MG/L	U
PUREX	SULFIDE	SW-846 9030	1.00	MG/L	U
PUREX	SULFIDE	SW-846 9030	1.00	MG/L	U
PUREX	SULFIDE	SW-846 9030	1.00	MG/L	U

FACILITY	ANALYTE	METHOD	RESULT	UNITS	QUALIFIER
PUREX	SULFOTEP	SW-846 8140	0.50	UG/L	U
PUREX	SULFOTEP	SW-846 8140	0.50	UG/L	U
PUREX	SULFOTEP	SW-846 8140	0.50	UG/L	U
PUREX	SULFOTEP	SW-846 8140	0.50	UG/L	U

FACILITY	ANALYTE	METHOD	RESULT	UNITS	QUALIFIER
PUREX	TETRACHLOROETHENE	SW-846 8240	5.00	UG/L	U
PUREX	TETRACHLOROETHENE	SW-846 8240	5.00	UG/L	U
PUREX	TETRACHLOROETHENE	SW-846 8240	5.00	UG/L	U
PUREX	TETRACHLOROETHENE	SW-846 8240	5.00	UG/L	U

FACILITY	ANALYTE	METHOD	RESULT	UNITS	QUALIFIER
PUREX	THALLIUM	SW-846 6010	1.50	UG/L	
PUREX	THALLIUM	SW-846 7841	1.70	UG/L	
PUREX	THALLIUM	SW-846 7841	3.80	UG/L	

FACILITY	ANALYTE	METHOD	RESULT	UNITS	QUALIFIER
PUREX	THORIUM-228	GAMMA SCAN	18.00	PCI/L	
PUREX	THORIUM-228	GAMMA SCAN	30.00	PCI/L	U
PUREX	THORIUM-228	GAMMA SCAN	20.00	PCI/L	U
PUREX	THORIUM-228	GAMMA SCAN	20.00	PCI/L	U

FACILITY	ANALYTE	METHOD	RESULT	UNITS	QUALIFIER
PUREX	THORIUM-232	GAMMA SCAN	60.00	PCI/L	U
PUREX	THORIUM-232	GAMMA SCAN	50.00	PCI/L	U
PUREX	THORIUM-232	GAMMA SCAN	60.00	PCI/L	U
PUREX	THORIUM-232	GAMMA SCAN	50.00	PCI/L	U

FACILITY	ANALYTE	METHOD	RESULT	UNITS	QUALIFIER
PUREX	TIN	SW-846 6010	8.30	UG/L	
PUREX	TIN	SW-846 6010	12.60	UG/L	
PUREX	TIN	SW-846 7870	1,700.00	UG/L	
PUREX	TIN	SW-846 7870	617.00	UG/L	

FACILITY	ANALYTE	METHOD	RESULT	UNITS	QUALIFIER
PUREX	TOLUENE	SW-846 8240	5.00	UG/L	U
PUREX	TOLUENE	SW-846 8240	5.00	UG/L	U
PUREX	TOLUENE	SW-846 8240	5.00	UG/L	U
PUREX	TOLUENE	SW-846 8240	5.00	UG/L	U

FACILITY	ANALYTE	METHOD	RESULT	UNITS	QUALIFIER
PUREX	TOTAL DISSOLVED SOLIDS	EPA-600 160.1	5.00	MG/L	U
PUREX	TOTAL DISSOLVED SOLIDS	EPA-600 160.1	5.00	MG/L	U

SUPPORTING DATA: STEAM CONDENSATE

FACILITY	ANALYTE	METHOD	RESULT	UNITS	QUALIFIER
PUREX	TOTAL DISSOLVED SOLIDS	EPA-600 160.1	5.00	MG/L	U
PUREX	TOTAL DISSOLVED SOLIDS	EPA-600 160.1	31.00	MG/L	

FACILITY	ANALYTE	METHOD	RESULT	UNITS	QUALIFIER
PUREX	TOTAL ORGANIC CARBON	SW-846 9060	1.00	MG/L	U
PUREX	TOTAL ORGANIC CARBON	SW-846 9060	1.00	MG/L	U
PUREX	TOTAL ORGANIC CARBON	SW-846 9060	1.00	MG/L	U
PUREX	TOTAL ORGANIC CARBON	SW-846 9060	1.00	MG/L	U

FACILITY	ANALYTE	METHOD	RESULT	UNITS	QUALIFIER
PUREX	TOTAL ORGANIC HALIDES	SW-846 9020T	5.00	UG/L	U
PUREX	TOTAL ORGANIC HALIDES	SW-846 9020T	5.00	UG/L	U
PUREX	TOTAL ORGANIC HALIDES	SW-846 9020T	5.00	UG/L	U

FACILITY	ANALYTE	METHOD	RESULT	UNITS	QUALIFIER
PUREX	TOTAL RADIUM	PLUTONIUM	0.40	PCI/L	U
PUREX	TOTAL RADIUM	RADIUM TOTAL	0.30	PCI/L	U
PUREX	TOTAL RADIUM	RADIUM TOTAL	0.40	PCI/L	U
PUREX	TOTAL RADIUM	RADIUM TOTAL	0.40	PCI/L	U

FACILITY	ANALYTE	METHOD	RESULT	UNITS	QUALIFIER
PUREX	TOTAL URANIUM	TOTAL URANIUM	0.07	UG/L	U
PUREX	TOTAL URANIUM	TOTAL URANIUM	0.03	UG/L	UX
PUREX	TOTAL URANIUM	TOTAL URANIUM	0.04	UG/L	U
PUREX	TOTAL URANIUM	TOTAL URANIUM	0.05	UG/L	U

FACILITY	ANALYTE	METHOD	RESULT	UNITS	QUALIFIER
PUREX	TOXAPHENE	SW-846 8080	5.00	UG/L	U
PUREX	TOXAPHENE	SW-846 8080	5.00	UG/L	U
PUREX	TOXAPHENE	SW-846 8080	5.00	UG/L	U
PUREX	TOXAPHENE	SW-846 8080	5.00	UG/L	U

FACILITY	ANALYTE	METHOD	RESULT	UNITS	QUALIFIER
PUREX	TRANS-1,2-DICHLOROETHENE	SW-846 8240	5.00	UG/L	U
PUREX	TRANS-1,2-DICHLOROETHENE	SW-846 8240	5.00	UG/L	U
PUREX	TRANS-1,2-DICHLOROETHENE	SW-846 8240	5.00	UG/L	U
PUREX	TRANS-1,2-DICHLOROETHENE	SW-846 8240	5.00	UG/L	U

FACILITY	ANALYTE	METHOD	RESULT	UNITS	QUALIFIER
PUREX	TRANS-1,3-DICHLOROPROPENE	SW-846 8240	5.00	UG/L	U
PUREX	TRANS-1,3-DICHLOROPROPENE	SW-846 8240	5.00	UG/L	U
PUREX	TRANS-1,3-DICHLOROPROPENE	SW-846 8240	5.00	UG/L	U
PUREX	TRANS-1,3-DICHLOROPROPENE	SW-846 8240	5.00	UG/L	U

FACILITY	ANALYTE	METHOD	RESULT	UNITS	QUALIFIER
PUREX	TRANS-1,4-DICHLORO-2-BUTENE	SW-846 8240	50.00	UG/L	U
PUREX	TRANS-1,4-DICHLORO-2-BUTENE	SW-846 8240	50.00	UG/L	U
PUREX	TRANS-1,4-DICHLORO-2-BUTENE	SW-846 8240	50.00	UG/L	U
PUREX	TRANS-1,4-DICHLORO-2-BUTENE	SW-846 8240	50.00	UG/L	U

FACILITY	ANALYTE	METHOD	RESULT	UNITS	QUALIFIER
PUREX	TRICHLOROETHENE	SW-846 8240	5.00	UG/L	U
PUREX	TRICHLOROETHENE	SW-846 8240	5.00	UG/L	U
PUREX	TRICHLOROETHENE	SW-846 8240	5.00	UG/L	U
PUREX	TRICHLOROETHENE	SW-846 8240	5.00	UG/L	U

FACILITY	ANALYTE	METHOD	RESULT	UNITS	QUALIFIER
PUREX	TRICHLOROFLUOROMETHANE	SW-846 8240	10.00	UG/L	U
PUREX	TRICHLOROFLUOROMETHANE	SW-846 8240	10.00	UG/L	U

SUPPORTING DATA: STEAM CONDENSATE

FACILITY	ANALYTE	METHOD	RESULT	UNITS	QUALIFIER
PUREX	TRICHLOROFLUOROMETHANE	SW-846 8240	10.00	UG/L	U
PUREX	TRICHLOROFLUOROMETHANE	SW-846 8240	10.00	UG/L	U

FACILITY	ANALYTE	METHOD	RESULT	UNITS	QUALIFIER
PUREX	TRITIUM	TRITIUM	300.00	PCI/L	U
PUREX	TRITIUM	TRITIUM	200.00	PCI/L	U
PUREX	TRITIUM	TRITIUM	300.00	PCI/L	U
PUREX	TRITIUM	TRITIUM	300.00	PCI/L	U

FACILITY	ANALYTE	METHOD	RESULT	UNITS	QUALIFIER
PUREX	URANIUM-233/234	ISOTOPIC URANIUM	0.08	PCI/L	U
PUREX	URANIUM-233/234	URANIUM ISOTOPES	0.20	PCI/L	U
PUREX	URANIUM-233/234	URANIUM ISOTOPES	0.10	PCI/L	U
PUREX	URANIUM-233/234	URANIUM ISOTOPES	0.09	PCI/L	U

FACILITY	ANALYTE	METHOD	RESULT	UNITS	QUALIFIER
PUREX	URANIUM-235	ISOTOPIC URANIUM	0.10	PCI/L	U
PUREX	URANIUM-235	URANIUM ISOTOPES	0.20	PCI/L	U
PUREX	URANIUM-235	URANIUM ISOTOPES	0.10	PCI/L	U
PUREX	URANIUM-235	URANIUM ISOTOPES	0.10	PCI/L	U

FACILITY	ANALYTE	METHOD	RESULT	UNITS	QUALIFIER
PUREX	URANIUM-238	ISOTOPIC URANIUM	0.08	PCI/L	U
PUREX	URANIUM-238	URANIUM ISOTOPES	0.20	PCI/L	U
PUREX	URANIUM-238	URANIUM ISOTOPES	0.10	PCI/L	U
PUREX	URANIUM-238	URANIUM ISOTOPES	0.09	PCI/L	U

FACILITY	ANALYTE	METHOD	RESULT	UNITS	QUALIFIER
PUREX	VANADIUM	SW-846 6010	2.30	UG/L	
PUREX	VANADIUM	SW-846 6010	5.50	UG/L	
PUREX	VANADIUM	SW-846 6010	2.40	UG/L	
PUREX	VANADIUM	SW-846 6010	2.20	UG/L	

FACILITY	ANALYTE	METHOD	RESULT	UNITS	QUALIFIER
PUREX	VINYL ACETATE	SW-846 8240	10.00	UG/L	U
PUREX	VINYL ACETATE	SW-846 8240	10.00	UG/L	U
PUREX	VINYL ACETATE	SW-846 8240	10.00	UG/L	U
PUREX	VINYL ACETATE	SW-846 8240	10.00	UG/L	U

FACILITY	ANALYTE	METHOD	RESULT	UNITS	QUALIFIER
PUREX	VINYL CHLORIDE	SW-846 8240	10.00	UG/L	U
PUREX	VINYL CHLORIDE	SW-846 8240	10.00	UG/L	U
PUREX	VINYL CHLORIDE	SW-846 8240	10.00	UG/L	U

FACILITY	ANALYTE	METHOD	RESULT	UNITS	QUALIFIER
PUREX	XYLENE (TOTAL)	SW-846 8240	5.00	UG/L	U
PUREX	XYLENE (TOTAL)	SW-846 8240	5.00	UG/L	U
PUREX	XYLENE (TOTAL)	SW-846 8240	5.00	UG/L	U
PUREX	XYLENE (TOTAL)	SW-846 8240	5.00	UG/L	U

SUPPORTING DATA: STEAM CONDENSATE

FACILITY	ANALYTE	METHOD	RESULT	UNITS	QUALIFIER
PUREX	ZINC	SW-846 6010	6.20	UG/L	
PUREX	ZINC	SW-846 6010	31.50	UG/L	
PUREX	ZINC	SW-846 6010	10.60	UG/L	
PUREX	ZINC	SW-846 6010	17.10	UG/L	

9613503.2495

STATE ENVIRONMENTAL POLICY ACT (SEPA)

ENVIRONMENTAL CHECKLIST FORMS

FOR

COOLING WATER AND CONDENSATE DISCHARGES

JULY 1996

REVISION 0

WASHINGTON ADMINISTRATIVE CODE
ENVIRONMENTAL CHECKLIST FORMS
[WAC 197-11-960]

9613503.2494

A. BACKGROUND

1. Name of proposed project, if applicable:

Hanford Site Cooling Water and Condensate Discharges. This project is a State Waste Discharge Permit Application to discharge cooling water and condensate waste streams.

2. Name of applicants:

U.S. Department of Energy, Richland Operations Office (DOE-RL).

3. Address and phone number of applicants and contact persons:

U.S. Department of Energy
Richland Operations Office
Post Office Box 550
Richland, Washington 99352

Contact Persons:

J. E. Rasmussen, Director
Environmental Assurance, Permits,
and Policy Division
(509) 376-5441

4. Date checklist prepared:

June 1996

5. Agency requesting the checklist:

Washington State
Department of Ecology
1315 W. 4th Avenue
Kennewick, Washington 99336-6018

6. Proposed timing or schedule: (including phasing, if applicable):

Proposed actions are ongoing in accordance with the Ecology Consent Order, DE 91NM-177, (216 Consent Order). Future additions will be required to comply with the conditions stated in the Categorical WAC-173-216 Permit, when issued.

7. **Do you have any plans for future additions, expansion, or further activity related to or connected with this proposal? If yes, explain.**

   A Categorical WAC-173-216 State Waste Discharge Permit is being obtained for cooling water and condensate discharges. Future waste streams may be added if they meet all criteria in the categorical permit prior to discharge.

8. **List any environmental information you know about that has been prepared, or will be prepared, directly related to this proposal.**

   General Hanford Site environmental information is found in *Hanford Site National Environmental Policy Act (NEPA) Characterization*, PNL-6415, Revision 7, Pacific Northwest Laboratory, 1995, Richland, Washington.

   National Environmental Policy Act (NEPA) documentation for these actions is generally covered by Categorical Exclusions (CX) as found in 10 CFR 1021, Subpart D, Appendices A and B. Some of these have been approved by DOE for site-wide use including: B1.3, Routine Maintenance; B1.6, Installation/modification of retention tanks; B1.15, Construction/modification of small-scale support buildings; and B1.22, installation and modification of mobile office facilities.

9. **Do you know whether applications are pending for government approvals of other proposals directly affecting the property covered by your proposal? If yes, explain.**

   N/A

10. **List any government approvals or permits that will be needed for your proposal, if known.**

    A Categorical WAC-173-216 Permit will be required. See item 7 above.

11. **Give brief, complete description of your proposal, including the proposed uses and the size of the project and site. There are several questions later in this checklist that ask you to describe certain aspects of your proposal. You do not need to repeat those answers on this page.**

    This proposal is for discharge of cooling water and condensate waste waters throughout the Hanford site. These water sources come from three sources:

    a. Raw untreated water from the Columbia River.

    b. Potable water from the Columbia River. This water is Columbia River water converted into sanitary or potable water through a conventional water treatment process.

c. Potable water from groundwater. This water pumped from deep wells and converted into sanitary or potable water through a conventional water treatment process.

Water is used to cool parts of many heat generating systems. In these non-contact systems the cooling water is contained in a cooling jacket, heat exchanger, or pipeline, which allows heat dissipation but prevents the water from coming in contact with the process equipment/materials and thus prevents contamination. Non-contact cooling water is used throughout the Hanford site for equipment such as heating, ventilation, and air conditioning (HVAC) systems, air compressors, diesel engines, and ice machines. These systems may be closed loop or once through cooling systems. Pump leak water and valve waste water discharges also are included in this category.

Condensate water forms when steam, which is used in many places on the Hanford Site, comes in contact with cooler surfaces. Condensate water can also form from ambient air. As an air stream is cooled, the water vapors in the air condense to a liquid form and collect on the surface of equipment and pipes. The systems where air is the condensate source include the HVAC air conditioning units and ventilation systems, air compressors and ice machines. Condensate formed by this process must be removed from the systems to avoid operational problems associated with waste, being present.

12. **Location of the proposal. Give sufficient information for a person to understand the precise location of your proposed project, including a street address, if any, and section, township, and range, if known. If a proposal would occur over a range of area, provide the range or boundaries of the site(s). Provide a legal description, site plan, vicinity map, and topographic map, if reasonably available. While you should submit any plans required by the agency, you are not required to duplicate maps or detailed plans submitted with any permit applications related to this checklist.**

The Hanford Site covers approximately 1,450 square kilometers (560 square miles) of semiarid land that is owned by the U.S. Government and managed by the U.S. Department of Energy, Richland Operations Office (DOE-RL). The Hanford Site is located northwest of the city of Richland, Washington. The city of Richland adjoins the southeastern most portion of the Hanford Site boundary and is the nearest population center.

Activities on the Hanford Site are centralized in numerically designated areas. The 100 Area, located along the Columbia River, contain deactivated reactors. The processing units are in the 200 Areas, which are on a plateau approximately 11 kilometers (7 miles) from the Columbia River. The 300 Area, located adjacent to and north of Richland, contains research and development laboratories. The 400 Area, 8 kilometers (5 miles) northwest of the 300 Area, contains the Fast Flux Test Facility previously used for testing liquid metal reactor systems. The 600 Area covers all locations not specifically given an area designation. Adjacent to the north of Richland, the 1100 Area contains offices associated with administration, maintenance, transportation, and

materials procurement and distribution. The 3000 Area, located at the north end of Richland, contains offices and maintenance shops. Additional administrative offices are located in the 700 Area in downtown Richland.

The applicability of the State Waste Discharge Permit Application to streams is limited to activities conducted by DOE-RL and its contractors on the Hanford Site, and excludes activities conducted by others on lands covered by leases, use permits, easements and other agreements whereby land is used by parties other than DOE-RL. For example, this application does not cover activities on state owned or leased lands, lands owned by the Bonneville Power Administration, lands leased to the Washington Public Power Supply System, US Ecology and the Ashe Substation or similarly leased lands not under the management of DOE-RL.

TO BE COMPLETED BY APPLICANT

EVALUATIONS FOR AGENCY USE ONLY

B. ENVIRONMENTAL ELEMENTS

1. Earth

a. **General description of the site (circle one): Flat, rolling, hilly, steep slopes, mountainous, other_____.**

Flat

b. **What is the steepest slope on the site (approximate percent slope)?**

The general slope of land on the Hanford site is generally less than 2 percent.

c. **What general types of soils are found on the site? (for example, clay, sandy gravel, peat, muck)? If you know the classification of agricultural soils, specify them and note any prime farmland.**

There are 15 different types of soil on the Hanford Site. The vast majority of the soil where activities would take place is classified as sand to sandy loam. For detailed information about soils on the Hanford Site see *Hanford Site National Environmental Policy Act (NEPA) Characterization*, PNL-6415, Revision 7, Pacific Northwest Laboratory, 1995, Richland, Washington.

d. **Are there surface indications or history of unstable soils in the immediate vicinity? If so, describe.**

Hanford Site soils are generally stable although sand is affected by blowing winds.

e. **Describe the purpose, type, and approximate quantities of any filling or grading proposed. Indicate source of fill.**

Filling and grading ordinarily take place during construction activities but are not normally part of actual testing and water discharges.

f. **Could erosion occur as a result of clearing, construction, or use? If so, generally describe.**

Due to the soil types and dry climate, erosion is not expected. Water discharges would soak into the soil at the place of discharge.

g. **About what percent of the site will be covered with impervious surfaces after project construction (for example, asphalt or buildings)?**

Impervious surfaces would not be constructed.

h. **Proposed measures to reduce or control erosion, or other impacts to the earth, if any:**

None

2. Air

a. **What types of emissions to the air would result from the proposal (i.e., dust, automobile, odors, industrial wood smoke) during construction and when the project is completed? If any, generally describe and give approx. quantities, if known.**

Motors used in these activities would produce minor amounts of air emissions in the form of exhaust gases.

b. **Are there any off-site sources of emissions or odors that may affect your proposal? If so, generally describe.**

No.

c. **Proposed measures to reduce or control emissions or other impacts to the air, if any?**

None.

3. Water

a. Surface

1) **Is there any surface water body on or in the immediate vicinity of the site (including year-round and seasonal streams, saltwater, lakes, ponds, wetlands)? If yes, describe type and provide names. If appropriate, state what stream or river it flows into.**

The proposed actions would occur on the Hanford site but would not discharge into the Columbia River.

2) **Will the project require any work over, in, or adjacent to (within 200 feet) the described waters? If yes, please describe and attach available plans.**

Water discharges may rarely be called for within 200 feet of the Columbia River.

3) **Estimate the amount of fill and dredge material that would be placed in or removed from surface water or wetlands and indicate the area of the site that would be affected. Indicate the source of fill material.**

No fill or dredge material would be involved.

4) **Will the proposal require surface water withdrawals or diversions? Give general description, purpose, and approximate quantities if known.**

Water from the Columbia River may be the source of water for some cooling water and condensate systems.

5) **Does the proposal lie within a 100-year floodplain? Note location on the site plan.**

The proposed actions would not take place within the 100 year floodplain.

6) **Does the proposal involve any discharges of waste materials to surface waters? If so, describe the type of waste and anticipated volume of discharge.**

No discharge of waste materials to surface waters would occur.

b. **Ground**

1) **Will ground water be withdrawn, or will water be discharged to ground water? Give general description, purpose, and approximate quantities if known.**

By nature some cooling water and condensate discharges may be released to the ground. Some of this water may be from wells.

2) **Describe waste material that will be discharged into the ground from septic tanks or other sources, if any (for example: Domestic sewage; industrial, containing the following chemicals...; agricultural; etc.). Describe the general size of the system, the number of such systems, the number of houses to be served (if applicable), or the number of animals or humans the system(s) are expected to serve.**

None.

c. **Water Run-off (including storm water)**

1) **Describe the source of run-off (including storm water) and method of collection and disposal, if any (include quantities, if known). Where will this water flow? Will this water flow into other waters? If so, describe.**

These activities would not generate stormwater discharges.

2) **Could waste materials enter ground or surface waters? If so, generally describe.**

No.

d. **Proposed measures to reduce or control surface, ground, and run-off water impacts, if any:**

None.

4. Plants

a. **Check or circle the types of vegetation found on the site.**

___ deciduous tree: alder, maple, aspen, other
___ evergreen tree: fir, cedar, pine, other
_X_ shrubs
_X_ grass
___ pasture
___ crop or grain
___ wet soil plants: cattail, buttercup, bulrush, skunk cabbage, other
___ water plants: water lily, eelgrass, milfoil, other
_X_ other types of vegetation

The Hanford Site contains plants typical of a desert with a shrub-steppe habitat. For detailed information about vegetation on the Hanford Site see *Hanford Site National Environmental Policy Act (NEPA) Characterization*, PNL-6415, Revision 7, Pacific Northwest Laboratory, 1995, Richland, Washington.

b. **What kind and amount of vegetation will be removed or altered?**

None.

c. **List threatened or endangered species known to be on or near the site.**

Threatened or endangered species would not occur in and around heat exchangers, cooling systems or other equipment that would be the source of cooling water discharges.

d. **Proposed landscaping, use of native plants, or other measures to preserve or enhance vegetation on the site, if any:**

No landscaping would be called for.

5. Animals

a. **Circle any birds and animals which have been observed on or near the site or are known to be on or near the site:**

birds: hawk, heron, eagle, songbirds,
other:.....
mammals: deer, bear, elk, beaver,
other:.....
fish: bass, salmon, trout, herring, shellfish,
other:.....

Many species of birds and animals can be found on the Hanford Site. Due to the disturbed nature of the locations on the Hanford site where the proposed activities would take place, it is not expected that the discharges would adversely impact these species. For detailed information about animals on the Hanford Site see *Hanford Site National Environmental Policy Act (NEPA) Characterization*, PNL-6415, Revision 7, Pacific Northwest Laboratory, 1995, Richland, Washington.

b. **List any threatened or endangered species known to be on or near the site.**

Of the two federal- and state-listed endangered species observed on the Hanford Facility, the bald eagle is a regular winter visitor, occurring along some areas on the Columbia River, and the peregrine falcon is an uncommon visitor. The state listed American white pelican is an uncommon seasonal resident along the Columbia River. No federal or state listed endangered species is likely to occur in the areas where cooling water and condensate discharges would take place.

c. **Is the site part of a migration route? If so, explain.**

The Hanford Site and the adjacent Columbia River are part of the broad Pacific Flyway for waterfowl migration.

d. **Proposed measures to preserve or enhance wildlife, if any:**

None.

6. Energy and Natural Resources

a. What kinds of energy (electric, natural gas, oil, wood stove, solar) will be used to meet the completed project's energy needs? Describe whether it will be used for heating, manufacturing, etc.

None.

b. Would your project affect the potential use of solar energy by adjacent properties? If so, generally describe.

No.

c. What kinds of energy conservation features are included in the plans of this proposal? List other proposed measures to reduce or control energy impacts, if any:

Not applicable.

7. Environmental Health

a. Are there any environmental health hazards, including exposure to toxic chemicals, risk of fire and explosion, spill, or hazardous waste, that could occur as a result of this proposal? If so, describe.

No.

1) Describe special emergency services that might be required.

Hanford Site security, fire response, and ambulance services are on call at all times in the event of an onsite emergency.

2) Proposed measures to reduce or control environmental health hazards, if any:

None.

b. Noise

1) What type of noise exists in the area which may affect your project (for example: traffic, equipment, operation, other)?

None.

2) **What types and levels of noise would be created by or associated with the project on a short-term or a long-term basis (for example: traffic, construction, operation, other)? Indicate what hours noise would come from the site.**

There could be minor noise from pump motors during some water discharging operations.

3) **Proposed measures to reduce or control noise impacts, if any:**

None.

8. **Land and Shoreline Use**

a. **What is the current use of the site and adjacent properties?**

Commercial activities on the Hanford Facility include a nuclear power plant and a State of Washington-administered low-level burial area operated by US Ecology.

b. **Has the site been used for agriculture? If so, describe.**

No portion of the Hanford Site has been used for agricultural purposes since 1943.

c. **Describe any structures on the site.**

Hanford site structures are many and varied, although most are contained within fenced, developed areas.

d. **Will any structures be demolished? If so, what?**

No.

e. **What is the current zoning classification of the site?**

The Hanford Site is zoned by Benton County as an Unclassified Use (U) district.

f. **What is the current comprehensive plan designation of the site?**

The 1985 Benton County Comprehensive Land Use Plan designates the Hanford Site as the "Hanford Reservation." Under this designation, land on the Site may be used for "activities nuclear in

nature." Non-nuclear activities are authorized "if and when DOE approval for such activities is obtained."

Future use of the Hanford Site is currently being considered by the DOE, but final decisions are not expected to be made until the year 2001.

g. **If applicable, what is the current shoreline master program designation of the site?**

Not applicable.

h. **Has any part of the site been classified as an "environmentally sensitive" area? If so, specify.**

The Hanford site contains an area designated as the Hanford Reach of the Columbia River. Under Public Law 100-605, "Study of the Hanford Reach of the Columbia River," the National Park Service would be requested to review any activities which might take place within this area.

i. **Approximately how many people would reside or work in the completed project?**

Does not apply.

j. **Approximately how many people would the completed project displace?**

Does not apply.

k. **Proposed measures to avoid or reduce displacement impacts, if any:**

Does not apply.

l. **Proposed measures to ensure the proposal is compatible with existing and projected land uses and plans, if any:**

Does not apply. (Refer to answer to Checklist Question B.8.f. and h)

9. Housing

a. **Approximately how many units would be provided, if any? Indicate whether high, middle, or low-income housing.**

None.

b. Approximately how many units, if any, would be eliminated? Indicate whether high, middle, or low-income housing.

None.

c. Proposed measures to reduce or control housing impacts, if any:

None.

10. Aesthetics

a. What is the tallest height of any proposed structure(s), not including antennas; what is the principal exterior building material(s) proposed?

No new structures are proposed.

b. What views in the immediate vicinity would be altered or obstructed?

None.

c. Proposed measures to reduce or control aesthetic impacts, if any:

None.

11. Light and Glare

a. What type of light or glare will the proposal produce? What time of day would it mainly occur?

None.

b. Could light or glare from the finished project be a safety hazard or interfere with views?

No.

c. What existing off-site sources of light or glare may affect your proposal?

None.

d. Proposed measures to reduce or control light and glare impacts, if any:

None.

12. **Recreation**

a. **What designated and informal recreational opportunities are in the immediate vicinity?**

The only recreational opportunities in the area involve the Columbia River (e.g., boating, and fishing).

b. **Would the proposed project displace any existing recreational uses? If so, describe.**

No.

c. **Proposed measures to reduce or control impacts on recreation, including recreation opportunities to be provided by the project or applicant, if any?**

None.

13. **Historic and Cultural Preservation**

a. **Are there any places or objects listed on, or proposed for, national, state, or local preservation registers known to be on or next to the site? If so, generally describe.**

The retired B Reactor has been placed on the National Register of Historic Places, but would not be disturbed by the proposed action. The historic status of other Hanford Site structures is in the process of being determined on a case-by-case basis as the need arises. Additional information regarding the cultural resources on the Hanford Site environment can be found in *Hanford Site National Environmental Policy Act (NEPA) Characterization*, PNL-6415, Revision 7, Pacific Northwest Laboratory, 1995, Richland, Washington.

b. **Generally describe any landmarks or evidence of historic, archaeological, scientific, or cultural importance known to be on or next to the site.**

Although the area adjacent to the Columbia River has been found to be rich in cultural resources, the proposed action would not effect undisturbed areas. Additional information regarding this can be found in *Hanford Site National Environmental Policy Act (NEPA) Characterization*, PNL-6415, Revision 7, Pacific Northwest Laboratory, 1995, Richland, Washington.

c. **Proposed measures to reduce or control impacts, if any:**

None.

14. **Transportation**

a. **Identify public streets and highways serving the site, and describe proposed access to the existing street system. Show on site plans, if any.**

Does not apply.

b. **Is site currently served by public transit? If not, what is the approximate distance to the nearest transit stop?**

The Hanford Site is a controlled location and public transportation is not allowed to the site, however, Ben-Franklin Transit does serve the 300 Area, discharging and picking up passengers at the 300 Area parking lot.

c. **How many parking spaces would the completed project have? How many would the project eliminate?**

None.

d. **Will the proposal require any new roads or streets, or improvements to existing roads or streets, not including driveways? If so, generally describe (indicate whether public or private).**

No.

e. **Will the project use (or occur in the immediate vicinity of) water, rail, or air transportation? If so, generally describe.**

No.

f. **How many vehicular trips per day would be generated by the completed project? If known, indicate when peak volumes would occur.**

None.

g. **Proposed measures to reduce or control transportation impacts, if any:**

None.

9613503.2509

15. Public Services

a. Would the project result in an increased need for public services (for example: fire protection, police protection, health care, schools, other)? If so, generally describe.

No.

b. Proposed measures to reduce or control direct impacts on public services, if any:

None.

16. Utilities

a. Circle utilities currently available at the site: electricity, natural gas, water, refuse service, telephone, sanitary sewer, septic system, other:

Currently the Hanford site uses electricity, water, refuse service, telephone, sanitary sewer, septic systems and other utilities. Activities at the site of each cooling waterand condensate discharge would use one or more of the same utilities.

b. Describe the utilities that are proposed for the project, the utility providing the service, and the general construction activities on the site or in the immediate vicinity which might be needed.

None.

SIGNATURES

The above answers are true and complete to the best of my knowledge. We understand that the lead agency is relying on them to make its decision.

J. E. Rasmussen

J. E. Rasmussen, Director,
Environmental Assurance, Permits,
and Policy Division
U.S. Department of Energy
Richland Operations Office

9/18/96
Date

DISTRIBUTION

Number of Copies

OFFSITE

3 Washington State Department of Ecology
1315 W. 4th Avenue
Kennewick, WA 99336-6018

Steve J. Skurla
Dave Dougherty (2)

1 U.S. Environmental Protection Agency

Doug Sherwood - EPA Region 10
712 Swift Boulevard, Suite 5
Richland, WA 99352

ONSITE

16 U.S. Department of Energy,

Richland Operations Office	MSIN
M. A. Barnard	L4-40
E. M. Bowers	S7-55
R. P. Carter	S7-55
B. A. Davis	R3-82
D. T. Evans	S7-41
R. N. Krekel	A5-15
D. G. Murillo	A2-45
D. J. Ortiz	A2-45
P. M. Pak	H4-83
L. D. Romine	R3-79
C. O. Ruud	S7-54
W. D. Seaborg	T5-50
G. L. Sinton	S7-55
P. J. Valcich	R3-79
Reading Room (2)	H2-53

9613503.2511

2 Bechtel Hanford Incorporated

M. C. Hughes	H0-17
J. G. Woolard	H0-09

7 ICF-Kaiser Hanford

B. J. Dixon(3)	B4-20
M. R. Gunter	B4-20
D. R. Herman	S2-12
D. L. Klages	S4-56
C. E. Marple	S4-56

3 Pacific Northwest Laboratory

B. A. Atencio	P7-79
E. A. Flores	P7-79
Hanford Technical Library	K1-11

40 Westinghouse Hanford Company

Correspondence Control	A3-01
D. Alison	R1-51
R. J. Boom	T6-12
R. J. Bottenus	T4-02
M. W. Bowman	R1-51
A. J. DiLiberto	H6-10
T. A. Dillhoff	N2-57
B. J. Dixon	B4-20
W. T. Dixon	H6-22
D. L. Flyckt	S6-71
G. R. Greager	H6-20
M. R. Gunter	B4-20
R. D. Gustavson	R1-51
M. J. Hall	T6-14
R. D. Haggard	H6-25
D. R. Herman	S2-12
D. R. Hirzel	T5-54
G. W. Jackson	B3-03
D. L. Johnson	S5-66
S. E. Killoy	S4-66
D. L. Klages	S2-34
C. J. Lewis	T4-02
D. W. Lindsey	S6-71
K. J. Lueck	S6-71

9613503.2512

J. J. Luke	H6-25
C. E. Marple	S2-34
R. P. Marshall	T6-14
D. J. McBride	T5-54
S. R. Moreno	B3-06
A. D. Poor	L6-55
N. J. Sullivan	S6-71
B. D. Williamson	B3-15
EDMC	H6-08
Reg. File	S6-71
Central Files(1)	L8-04
Document Processing and Distribution (2)	L8-15
Information Release Administration (3)	H4-17