START

0017753

WHC-EP-0467

Facility Effluent Monitoring Plan for the B Plant

BEST AVAILABLE COPY

Prepared for the U.S. Department of Energy
Office of Environmental Restoration
and Waste Management

Westinghouse
Hanford Company Richland, Washington

Hanford Operations and Engineering Contractor for the
U.S. Department of Energy under Contract DE-AC06-87RL10930

DEC 1991
RECEIVED
EDMC

Approved for Public Release

LEGAL DISCLAIMER

This report was prepared as an account of work sponsored by an agency of the United States Government. Neither the United States Government nor any agency thereof, nor any of their employees, nor any of their contractors, subcontractors or their employees, makes any warranty, express or implied, or assumes any legal liability or responsibility for the accuracy, completeness, or any third party's use or the results of such use of any information, apparatus, product, or process disclosed, or represents that its use would not infringe privately owned rights. Reference herein to any specific commercial product, process, or service by trade name, trademark, manufacturer, or otherwise, does not necessarily constitute or imply its endorsement, recommendation, or favoring by the United States Government or any agency thereof or its contractors or subcontractors. The views and opinions of authors expressed herein do not necessarily state or reflect those of the United States Government or any agency thereof.

This report has been reproduced from the best available copy. Available in paper copy and microfiche.

Available to the U.S. Department of Energy
and its contractors from
Office of Scientific and Technical Information
P.O. Box 62
Oak Ridge, TN 37831
(615) 576-8401

Available to the public from the U.S. Department of Commerce
National Technical Information Service
5285 Port Royal Road
Springfield, VA 22161
(703) 487-4650

Printed in the United States of America

DISCLM-1.CHP (1-91)

WHC-EP-0467

UC-721

Facility Effluent Monitoring Plan for the B Plant

K. A. Peterson
Westinghouse Hanford Company

R. L. Daubert
ERCE Environmental and
Energy Services Company

Date Published
November 1991

Prepared for the U.S. Department of Energy
Office of Environmental Restoration
and Waste Management

Westinghouse Hanford Company P.O. Box 1970 Richland, Washington 99352

Hanford Operations and Engineering Contractor for the
U.S. Department of Energy under Contract DE-AC06-87RL10930

Approved for Public Release

Document Title: Facility Effluent Monitoring Plan for the B Plant

Prepared by:

K. A. Peterson, Cognizant Engineer B Plant Environmental Engineering — Date: 11/6/91

Approved by:

M. W. Stevenson, Manager B Plant Environmental Engineering — Date: 11-6-91

R. J. Murkowski, Deputy Plant Manager, B Plant — Date: 11/6/91

D. J. Newland, Manager Defense Waste Remediation — Date: 11-7-91

9 2 1 2 3 6 9 1 7 5 1

FACILITY EFFLUENT MONITORING PLAN FOR THE B PLANT

ABSTRACT

A facility effluent monitoring plan is required by the U.S. Department of Energy in DOE Order 5400.1 for any operations that involve hazardous materials and radioactive substances that could impact employee or public safety or the environment. This document is prepared using the specific guidelines identified in* A Guide for Preparing Hanford Site Facility Effluent Monitoring Plans, WHC-EP-0438**. *This facility effluent monitoring plan assesses effluent monitoring systems and evaluates whether they are adequate to ensure the public health and safety as specified in applicable federal, state, and local requirements.*

This facility effluent monitoring plan is the first annual report. It shall ensure long-range integrity of the effluent monitoring systems. Whenever a new process or operation introduces new hazardous materials or significant radioactive materials, the facility effluent monitoring plan should be reviewed and updated. This document must be reviewed annually even if there are no operational changes, and it must be updated as a minimum every three years.

---

*General Environmental Protection Program, *DOE Order 5400.1, U.S. Department of Energy, Washington, D.C., 1988.*

**A Guide for Preparing Hanford Site Facility Effluent Monitoring Plans, *WHC-EP-0438, Westinghouse Hanford Company, Richland, Washington, 1991.*

This page intentionally left blank.

EXECUTIVE SUMMARY

The U.S. Department of Energy (DOE) Organization Act of 1977[1] and the Atomic Energy Act of 1954[2], as amended, provide for the protection of the health and safety of the public and environment. Recently, DOE issued new requirements for complying with DOE and other Federal agency environmental regulations. The DOE Order 5400.1 (DOE 1988a) requires a written environmental monitoring plan for each site, facility, or process that uses, generates, releases, or manages significant contaminants of radioactive and/or hazardous materials.

The two major components of an environmental monitoring plan consist of a facility effluent monitoring plan (FEMP) and an environmental surveillance plan. As stated in a document issued by the U.S. Department of Energy Field Office, Richland (RL), (DOE 1989), Westinghouse Hanford Company (Westinghouse Hanford) has the responsibility for the preparation of the FEMPs at the Hanford Site.

The FEMP for the B Plant Site provides sufficient information on B Plant effluent characteristics and the effluent monitoring systems so that a compliance assessment against applicable requirements may be performed. Radioactive and hazardous material source terms are related to specific effluent streams that are, in turn, related to discharge points and, finally, compared to the effluent monitoring system capability.

B Plant was originally designed to chemically process spent nuclear fuels. Radiological containment and confinement features were incorporated in the various facilities and support systems to prevent exposure of plant personnel and the general public to excessive radiation. After this initial mission was completed, the plant was modified to provide for the separation of strontium and cesium, individually, from the fission product waste stream following plutonium and uranium recovery from irradiated reactor fuels in the Plutonium Uranium Extraction (PUREX) Plant. The recovered, purified, and concentrated strontium and cesium solutions were then transferred to Waste Encapsulation and Storage Facility (WESF) for conversion to solid compounds, encapsulation, and interim storage. After strontium and cesium removal, the remaining waste was transferred from B Plant to the Tank Farms.

B Plant is an operating facility that is required to ensure safe storage and management of the WESF cesium and strontium capsules, as well as a substantial radiological inventory remaining in the plant from previous campaigns. There are currently no production activities at B Plant, but there are several operating systems required to accomplish the current B Plant mission. B Plant receives and stores various chemicals from commercial suppliers for treatment of low-level waste generated at WESF and B Plant, generation of demineralized water, and conditioning of water used in heating, ventilation, and air conditioning (HVAC) units. B Plant is the reference

---

[1]*DOE 1977, U.S. Department of Energy Organization Act of 1977*, United States Department of Energy, Washington, D.C.

[2]AEA 1954, *Atomic Energy Act of 1954*, as amended, Public Law 83-703, 66 Statute 919,42 USC 2011.

facility for pretreatment of selected double-shell tank wastes into low-level and high-level waste streams. This pretreatment is in support of the final double shell tank waste stabilization.

Each of the liquid and gaseous effluent streams were identified, and the characteristics of the potential contaminant source entering each of the streams were quantified. Data used to estimate releases during routine and upset operating conditions drew upon historical monitoring and characterization information, as well as calculations based on potential source term information. Decontamination factors were developed for those gaseous effluent streams where engineered controls and/or barriers were in place.

A description of the current effluent monitoring system (EMS) is provided so that the operational capabilities of the EMS could be compared to both applicable requirements and the characteristics of the effluent streams.

The EMS was then evaluated in terms of the following:

- Does the system operate within applicable requirements?
- Do the instrument specifications match up with the characteristics of the effluent streams?
- Is the system capable of responding to upset conditions?
- If there are deficiencies, what is needed to reach compliance?

In general, the EMS was found adequate for the liquid effluents. The only nonradiological monitoring parameter for which analyses are routinely performed is pH. However, any nonradiological contamination of the B Plant cooling water (CBC), B Plant steam condensate (BCS), or B Plant process condensate (BCP) would also involve radiological contamination; and therefore, monitoring for radiological contamination will serve as an indicator of any potential nonradiological contamination. If radiological contamination was identified, then nonradiological monitoring/sampling should also be conducted.

Routine radiological monitoring and sampling of gaseous effluents consist primarily of only total alpha and beta analyses because the stacks are <0.1 mrem/yr. In accordance with DOE/EH-0173T (DOE 1991), those gaseous emission points with the potential to contribute >10% of the offsite dose limits are monitored for specific radionuclides. Other emission points are monitored for gross alpha and gross beta only. In-line monitoring for gross radioactivity is generally adequate for process operation control for gaseous effluents in order to identify potential upset conditions. However, in-line gross radioactivity monitoring is not sufficient to meet NESHAPs (EPA 1989c) regulatory requirements for the 291-B-1 Stack only; and therefore, continuous sampling and analysis of samples is required.

Additionally, if spills or upsets occur, sampling should be conducted for any contaminants that have the potential to exceed regulatory limits.

CONTENTS

1.0 INTRODUCTION 1-1
1.1 FACILITY EFFLUENT MONITORING PLAN 1-1
1.1.1 Policy 1-1
1.1.2 Purpose 1-2
1.1.3 Scope 1-2
1.1.4 Discussion 1-3

2.0 FACILITY DESCRIPTION 2-1
2.1 BRIEF FACILITY PHYSICAL DESCRIPTION 2-1
2.1.1 The 221-B Building 2-1
2.1.2 The 271-B Building 2-6
2.1.3 The 225-B Building (WESF) 2-6
2.2 BRIEF PROCESS DESCRIPTION 2-8
2.2.1 Liquid Effluents 2-8
2.2.2 Gaseous Effluents 2-18
2.3 IDENTIFICATION AND CHARACTERIZATION OF POTENTIAL SOURCE TERMS . 2-33
2.3.1 Liquid Effluents 2-33
2.3.2 Gaseous Effluents 2-35

3.0 APPLICABLE REGULATIONS AND STANDARDS 3-1
3.1 FEMP REQUIREMENTS 3-1
3.2 HAZARDOUS MATERIAL 3-4
3.3 AIRBORNE EFFLUENTS 3-4
3.4 LIQUID EFFLUENTS 3-5
3.5 HAZARDOUS MIXED WASTES 3-7

4.0 IDENTIFICATION AND CHARACTERIZATION OF EFFLUENT STREAMS 4-1
4.1 IDENTIFICATION AND CHARACTERIZATION OF SOURCE TERMS CONTRIBUTING TO EACH EFFLUENT STREAM 4-1
4.1.1 Liquid Effluents 4-1
4.1.2 Gaseous Effluents 4-10
4.2 ROUTINE OPERATING CONDITIONS 4-12
4.2.1 Liquid Effluents 4-12
4.2.2 Gaseous Effluents 4-23
4.3 UPSET OPERATING CONDITIONS 4-29
4.3.1 Liquid Effluents 4-29
4.3.2 Gaseous Effluents 4-30

5.0 EFFLUENT POINT OF DISCHARGE DESCRIPTION 5-1
5.1 LIQUID EFFLUENTS 5-1
5.1.1 B Plant Steam Condensate to the 216-B-55 Crib 5-1
5.1.2 B Plant Process Condensate to the 216-B-62 Crib 5-1
5.1.3 B Plant Chemical Sewer to the 216-B-63 Ditch 5-2
5.1.4 B Plant Cooling Water to the 216-B-3 Pond 5-2
5.1.5 B Plant Sanitary Sewers (2607-E3 and 2607-E4) 5-2
5.1.6 French Drains 5-2
5.2 GASEOUS EFFLUENTS 5-2
5.2.1 B Plant/Waste Encapsulation Storage Facility Stacks . . 5-2
5.2.2 Gallery Exhausters 5-3

CONTENTS (continued)

5.2.3 Waste Encapsulation Storage Facility Emergency Jet (296-B-12) 5-3
5.2.4 Bulk Chemical Storage Tank Vents 5-3
5.2.5 Aqueous Makeup and Scale Tank Vents (271-B) 5-3

6.0 EFFLUENT MONITORING/SAMPLING SYSTEM DESIGN CRITERIA 6-1
6.1 NEW FACILITIES 6-1
6.2 EXISTING FACILITIES 6-1
6.2.1 Liquid Effluent Design Criteria 6-1
6.2.2 Gaseous Effluent Design Criteria 6-7

7.0 CHARACTERIZATION OF THE CURRENT EFFLUENT MONITORING SYSTEM 7-1
7.1 INSTRUMENTATION DESCRIPTION 7-1
7.2 TECHNICAL SPECIFICATIONS PERTAINING TO EFFLUENT MONITORING SYSTEM 7-1
7.2.1 Liquid Effluents 7-1
7.2.2 Gaseous Effluents 7-3
7.3 ALTERNATE MONITORING AND ASSESSMENT METHODS 7-5

8.0 HISTORICAL MONITORING/SAMPLING DATA FOR EFFLUENT STREAMS 8-1
8.1 NORMAL CONDITIONS 8-1
8.1.1 Liquid Effluent Streams 8-1
8.1.2 Gaseous Effluent Streams 8-2
8.2 UPSET CONDITIONS 8-3

9.0 SAMPLE ANALYSIS 9-1
9.1 U.S. DEPARTMENT OF ENERGY ANALYTICAL AND LABORATORY GUIDELINES 9-1

10.0 NOTIFICATIONS AND REPORTING REQUIREMENTS 10-1
10.1 DEFINITIONS 10-1
10.1.1 Primary Environmental Monitors 10-1
10.1.2 Secondary Environmental Monitors 10-1
10.1.3 Environmental Control Limit (ECL) 10-1
10.1.4 Hazardous Substance or Material 10-1
10.1.5 Nonconformance 10-2
10.1.6 Oil 10-2
10.1.7 Occurrence Report 10-2
10.1.8 Releases 10-2
10.1.9 Statistically Significant Increase 10-2
10.2 REQUIREMENTS 10-3
10.2.1 Occurrence Identification and Immediate Response . . . 10-3
10.2.2 Occurrence Categorization 10-3
10.3 OCCURRENCE CATEGORIZATION 10-3
10.3.1 Radioactive Releases 10-3
10.3.2 Release of Hazardous Substances/Regulated Pollutants/Oil 10-5
10.3.3 Discovery of Radioactive or Hazardous Material Contamination Due to U.S. Department of Energy Operations 10-6
10.3.4 Ecological Resources 10-6

CONTENTS (continued)

10.3.5 Agreement/Compliance Activities 10-7

11.0 INTERFACE WITH OPERATIONAL ENVIRONMENTAL SURVEILLANCE PROGRAM . . . 11-1
11.1 PURPOSE 11-1
11.2 BASIS 11-1
11.3 MEDIA SAMPLED AND ANALYSES PERFORMED 11-1
11.4 LOCATIONS 11-1
11.5 REPORTS 11-2
11.6 PROGRAMS 11-2
11.7 SAMPLER DESIGN 11-2
11.8 COMMUNICATION 11-3
11.9 REPORTS 11-3

12.0 QUALITY ASSURANCE 12-1
12.1 PURPOSE 12-1
12.2 OBJECTIVE 12-1
12.3 REQUIREMENTS 12-1
12.4 FACILITY-SPECIFIC REQUIREMENTS 12-2

13.0 INTERNAL AND EXTERNAL PLAN REVIEW 13-1

14.0 COMPLIANCE ASSESSMENT 14-1
14.1 COMPLIANCE ASSESSMENT COMPARISONS 14-1
14.1.1 Comparison of Instrument Specifications with Required Standards 14-1
14.1.2 Comparison of Instrument Specifications with Monitoring Criteria 14-6
14.1.3 Comparison of Instrument Specifications with Effluent Characteristics 14-6
14.1.4 Comparison of Projected Effluent Characteristics with Historical Data 14-6
14.1.5 Comparison of Effluent Monitoring Capabilities with Regulatory and Contractor Requirements 14-7
14.2 EXEMPTIONS 14-7
14.3 SYSTEM UPGRADES REQUIRED FOR COMPLIANCE 14-8

15.0 SUMMARY AND CONCLUSIONS 15-1
15.1 LIQUID EFFLUENTS 15-1
15.2 GASEOUS EFFLUENTS 15-1

16.0 ATTACHMENTS 16-1

APPENDICES

A NEED FOR B PLANT FACILITY EFFLUENT MONITORING PLAN A-1

B PERCENT DECONTAMINATION CALCULATIONS FOR LIQUID STREAMS B-1

This page intentionally left blank.

LIST OF FIGURES

2-1 Location of B Plant Within the 200 East area of the Hanford Site . 2-2

2-2 B Plant and Related Facilities 2-3

2-3 B Plant Schematic (221-B and 271-B cut-away) 2-7

2-4 CBC System 2-11

2-5 BCE System 2-12

2-6 E-23-3 Concentrator System 2-14

2-7 BCP Flow Diagram 2-15

2-8 BCP Flow Diagram 2-16

2-9 BCS System 2-18

2-10 B Plant Sanitary Sewer System 2-19

2-11 B Plant/WESF Area Stacks 2-23

2-12 Canyon Exhaust Ventilation System 2-24

2-13 Flow Path for Filtered Air Through the 221-B Canyon System 2-25

2-14 296-B-10 Gaseous Effluent Flowsheet 2-26

2-15 K-3 Exhaust System 2-28

2-16 296-B-13 Stack Schematic 2-29

2-17 296-B-14 Gaseous Effluent Flowsheet 2-30

2-18 221-B Building Gallery Exhausters 2-32

4-1 B Plant Steam Condensate 221-BB Building Sampling/Monitoring System 4-2

4-2 Contributors to B Plant Process Condensate Header Monitoring System 4-3

4-3 B Plant Chemical Sewer 221-B Building Electrical Gallery Header Monitoring/Diversion System 4-5

4-4 B Plant Chemical Sewer 2904-EA Building Monitoring System 4-6

LIST OF FIGURES (continued)

4-5 B Plant Cooling Water 15-in. Monitoring System 4-7

4-6 B Plant Cooling Water 24-in. Monitoring System 4-8

4-7 B Plant Main Stack Exhaust Flowsheet 4-11

4-8 B Plant Cooling Water Contributors for the 15-in. Subheader Monitoring System 4-22

6-1 B Plant Steam Condensate Sampling and Monitoring System 6-2

6-2 B Plant Process Condensate Sampling and Monitoring Locations . . . 6-4

6-3 B Plant Cooling Water Sampling System 6-5

6-4 B Plant Main Stack 292-B Building Sampling/Monitoring System . . . 6-8

6-5 296-B-5 Stack 221-BB Building Sampling/Monitoring System 6-10

6-6 296-B-10 Stack 225-B Building Sampling/Monitoring System 6-11

6-7 296-B-13 Stack 221-BB Building Sampling/Monitoring System 6-13

6-8 296-B-14 Gaseous Effluent Sampling/Monitoring System 6-14

LIST OF TABLES

2-1 B Plant Structures and their Functions. 2-4

2-2 Calculated Cesium and Strontium Inventories for K-3 Ventilation Duct 2-37

3-1 Applicable Regulations and Standards 3-2

4-2 B Plant Waste Encapsulation Storage Facility Tank Details 4-13

4-3 Calculated Decontamination Percentages Determined from Actual Data for the B Plant Steam Condensate 4-17

4-4 Calculated Decontamination Percentages Determined from Actual Data for the B Plant Cooling Water 4-18

4-5 Calculated Decontamination Percentages Determined from Actual Data for the B Plant Process Condensate 4-19

4-6 Calculated Decontamination Percentages Determined from Actual Data for the B Plant Chemical Sewer 4-20

4-7 Maximum Annual Average Calculated Radionuclide-Specific Stack Releases for Routine Operations 4-23

4-8 Comparison of Routine Stack Releases With Regulatory Limits for the 291-B-1 Stack 4-25

4-9 Comparison of Routine Stack Releases With Regulatory Limits for the 296-B-5 Stack 4-25

4-10 Comparison of Routine Stack Releases With Regulatory Limits for the 296-B-10 Stack 4-26

4-11 Comparison of Routine Stack Releases With Regulatory Limits for the 296-B-13 Stack 4-26

4-12 Comparison of Routine Stack Releases With Regulatory Limits for the 296-B-14 Stack 4-27

5-1 Liquid Effluent Discharge Points 5-1

LIST OF TABLES (continued)

5-2 Gaseous Effluent Discharge Points 5-3

7-1 Liquid Effluent Monitoring Instrument
- B Plant Process Condensate 7-6

7-2 Liquid Effluent Monitoring Instrumentation
- B Plant Steam Condensate 7-7

7-3 Liquid Effluent Monitoring Instrumentation
- B Plant Chemical Sewer 7-8

7-4 Liquid Effluent Monitoring Instrumentation
- B Plant Cooling Water 7-9

7-5 Gaseous Effluent Monitoring Instrumentation - 291-B-1 7-11

7-6 Gaseous Effluent Monitoring Instrumentation - 291-B-5 7-12

7-7 Gaseous Effluent Monitoring Instrumentation - 291-B-10 7-13

7-8 Gaseous Effluent Monitoring Instrumentation - 291-B-13 7-14

7-9 Gaseous Effluent Monitoring Instrumentation - 291-B-14 7-15

8-1 Radionuclide Emissions for the 291-B-1 Stack 8-3

8-2 Historical Analytical Data for the BCE Stream 8-4

8-3 Radionuclide Deposits for CY 1989 from the B Plant
Chemical Sewer to the 216-B-63 Trench 8-6

8-4 Historical Analytical Data for the BCS Stream 8-7

8-5 Radionuclide Data for the B Plant Steam Condensate
Stream from Monthly Operating Composite Samples 8-9

8-6 Radionuclide Deposits for CY 1989 from the B Plant Steam
Condensate to the 216-B-55 Crib 8-9

8-7 Historical Analytical Data for the BCP Stream 8-10

8-8 Historical Analytical Data for the CBC Stream 8-12

LIST OF TABLES (continued)

8-9 Radionuclide Deposits for CY 1989 from the B Plant Cooling Water to the 216-B-3 Pond 8-14

8-10 B Plant Gaseous Effluent System Radiological Data 8-14

9-1 Laboratory Procedures 9-1

9-2 Data Analyses and Statistical Treatment 9-2

14-1 Regulatory Compliance of B Plant Liquid Effluent Stream Monitors . 14-2

14-2 Comparison of Regulatory and Lab Analytical Detection Limits . . . 14-3

14-3 Comparison of Potential Regulated Constituents, Regulatory Limits, and Monitoring/Sampling Performed for the BCE Stream 14-3

14-4 Comparison of Potential Regulated Constituents, Regulatory Limits, and Monitoring/Sampling Performed for the CBC Stream 14-4

14-5 Comparison of Potential Regulated Constituents, Regulatory Limits, and Monitoring/Sampling Performed for the BCS Stream 14-5

9 2 1 2 3 6 3 1 7 7 4

This page intentionally left blank.

LIST OF TERMS

ACL	administrative control limits
ACV	administrative control values
ALARA	as low as reasonably achievable
AMU	Aqueous Makeup
ASTM	American Society of Testing and Materials
BAT	best available technology
BCE	B Plant chemical sewer
BCP	B Plant process condensate
BCS	B Plant steam condensate
CAM	continuous air monitor
CAW	current acid waste
CBC	B Plant cooling water
CERCLA	*Comprehensive Environmental Response, Compensation, and Liability Act of 1980*
CFR	Code of Federal Regulation
CW	concentrated waste
CY	calendar year
CWA	*Clean Water Act of 1977*
DAC	derived air concentration
DCG	derived concentration guide
DF	decontamination factor
DOE	U.S. Department of Energy
DOP	dioctylpthalate
DP	differential pressure
ECL	environmental control limit
EDE	effective dose equivalent
EF	exhaust fan
EMS	effluent monitoring system
EPA	U.S. Environmental Protection Agency
ES&H	environmental protection, safety, and health
FEMP	facility effluent monitoring plan
FPMCS	Facility Process Monitoring Control System
HEPA	high-efficiency particulate air filter
HVAC	heating, ventilation, and air conditioning
MRP	Management Requirements and Procedures
MSL	mean sea level
NBS	National Bureau of Standards
NCAW	neutralized current acid waste
NESHAP	National Emission Standards for Hazardous Air Pollutants
NPDES	National Pollution Discharge Elimination System
OEC	Operations and Engineering Contractor
OIU	Operator Interface Unit
ONC	Occurance Notification Center
POTW	Public-Owned Treatment Works
PRV	pressure-reducing valve

LIST OF TERMS (conintued)

PUREX	Plutonium Uranium Extraction
QA	quality assurance
QAPP	Quality Assurance Project Plan
RL	U.S. Department of Engergy Field Office, Richland
RTRP	reinforced thermosetting resin pipe
SAR	safety analysis report
SARA	*Superfund Amendments and Reauthorization Act of 1986*
SPCC	Spill Prevention Control and Countermeasures Plan
SSS	B Plant sanitary sewer system
SWP	special worker protection
TLD	thermoluminescent dosimeter
TLV	threshold limit value
TOC	total organic carbon
VCP	vitrified clay pipe
VVS	vessel ventilation system
WAC	Washington Administrative Code
WESF	Waste Encapsulation Storage Facility
Westinghouse Hanford	Westinghouse Hanford Company

9 2 1 2 3 6 8 1 7 7 7

METRIC CONVERSION CHART

INTO METRIC		
If you know	Multiply by	To get
Length		
inches	2.54	centimeters
feet	30.48	centimeters
feet	0.3048	meters
Volume		
gallons	3.786	liters
cubic feet	0.02832	cubic meters
Weight		
ounces	0.02835	kilogram
pounds	0.45359	kilogram
Temperature		
Fahrenheit	Subtract 32 then multiply by 5/9ths	Celsius
Pressure		
inches water	1.87	mm Hg
inches water	249	Paschal (Pa)
OUT OF METRIC		
Length		
centimeters	0.3937	inches
meters	3.28	feet
Volume		
milliliters	1.247×10^{-3}	cubic feet
liters	0.264	gallons
cubic meters	35.31	cubic feet
Temperature		
Celsius	Multiply by 9/5ths, then add 32	Fahrenheit
Pressure		
mm Hg	0.5353	inches water
Paschal (Pa)	4.02×10^{-3}	inches water

This page intentionally left blank.

FACILITY EFFLUENT MONITORING PLAN FOR B PLANT

1.0 INTRODUCTION

1.1 FACILITY EFFLUENT MONITORING PLAN

The *U.S. Department of Energy* (DOE) *Organization Act of 1977* and the *Atomic Energy Act of 1954*, as amended, provide for the protection of the health and safety of the public and environment. Recently, DOE issued new requirements for complying with DOE and other Federal agency environmental regulations. DOE Order 5400.1 requires a written environmental monitoring plan for each site, facility, or process that uses, generates, releases, or manages significant contaminants of radioactive and/or hazardous materials (DOE 1988a).

The two major components of an environmental monitoring plan consist of a facility effluent monitoring plan (FEMP) and an environmental surveillance plan. As stated in a document issued by the U.S. Department of Energy Field Office, Richland (RL) (DOE 1989), Westinghouse Hanford Company (Westinghouse Hanford) has the responsibility for the preparation of the FEMPs at the Hanford Site.

This document is intended to fulfill the FEMP requirement for the B Plant site. The FEMP is written to provide sufficient information on B Plant effluent characteristics and the effluent monitoring system so that a compliance assessment against requirements may be performed. Adequate details will be supplied such that radioactive and hazardous material source terms may be related to specific effluent streams that are, in turn, related to discharge points and, finally, compared to the effluent monitoring system capability.

This section provides information on the policy, purpose, and scope of a FEMP.

1.1.1 Policy

It is the policy of DOE and DOE contractors to conduct operations in an environmentally safe and sound manner and to perform effluent monitoring that is adequate to determine whether the public and the environment are adequately protected during DOE operations and whether operations are in compliance with DOE and other applicable federal, state, and local environmental and health protection standards and requirements. It is also DOE and DOE contractor policy that effluent monitoring programs meet high standards of quality and credibility.

1.1.2 Purpose

DOE Order 5400.1 requests a FEMP for each facility that contains hazardous and radioactive materials that could impact public and employee safety and the environment. The purpose of this plan is to fulfill the FEMP requirement for B Plant.

1.1.3 Scope

The scope of this document includes program plans for monitoring and characterizing radioactive and nonradioactive hazardous materials discharged in B Plant facility effluents. This plan includes complete documentation for both gaseous and liquid effluent monitoring systems for both radioactive and nonradioactive hazardous components that could be discharged under routine and/or upset operating conditions.

The plan is intended to provide a mechanism by which Westinghouse Hanford and RL may ensure that the B Plant effluent monitoring program will satisfy the following program objectives (DOE 1988a):

- Verify compliance with applicable federal, state, and local effluent regulations and standards and DOE orders
- Determine compliance with commitments made in environmental impact statements, environmental assessments, or other official documents
- Evaluate the effectiveness of treatment and control systems
- Support permit revision and/or reissuance
- Detect and characterize unplanned releases
- Identify potential environmental problems.

Following are the B Plant effluents included in this FEMP:

Liquid	Gaseous
B Plant Steam Condensate (BCS)	291-B-1 Stack
B Plant Process Condensate (BCP)	296-B-5 Stack
B Plant Chemical Sewer (BCE)	296-B-10 Stack
B Plant Combined Cooling Water (CBC)	296-B-13 Stack
B Plant Sanitary Sewer (2607-E3)	296-B-14 Stack
B Plant Sanitary Sewer (2607-E4)	Gallery Exhausters
French Drains	Waste Encapsulation Storage Facility (WESF)
	Emergency Jet
	Bulk chemical storage tank vents
	Aqueous Makeup Unit (AMU) and scale tank vents

1.1.4 Discussion

Regulations governing airborne radioactive emissions are given in 40 Code of Federal Regulations (CFR) Part 61 [National Emission Standards for Hazardous Air Pollutants (NESHAPs)] (EPA 1989c). Under NESHAPs, the U.S. Environmental Protection Agency (EPA) is promulgating a NESHAPs mandating that radionuclide emissions from each DOE site not exceed 10 mrem/yr effective dose equivalent (EDE) to the maximally exposed individual. The entire Hanford site represents the DOE Site Facility and must therefore meet the 10 mrem/yr standard. Subpart H of the NESHAPs regulations requires that radionuclide emission rates from stacks and events be measured at all release points with the potential to discharge radionuclides into the air in quantities that could cause an EDE in excess of 1% of the 10 mrem/yr EDE standard. Furthermore, all radionuclides that could contribute greater than 10% of the potential EDE for each release point must be measured; or, with prior EPA approval, alternative methods may be used. When determining whether a FEMP is required for a specific facility, engineered emission controls between the point of generation and the discharge point are not to be considered.

Characterization of the radioactive and nonradioactive constituents in each B Plant effluent stream provides the underlying rationale for the effluent monitoring program discussed in this plan. Regulations such as NESHAPs (EPA 1989c) and the *Clean Water Act of 1977* (CWA) provide guidance on the adequacy of effluent monitoring. Characterization of dangerous waste at the point of generation is required by 40 CFR 261.3(b) (EPA 1989b). While this requirement is only for dangerous waste, this plan addresses all major potential contaminants at the point of generation in order to assess the effectiveness of engineered and administrative barriers, as well as the consequences of upset releases, and to ensure that effluent monitoring programs address all pertinent constituents.

The plan tracks the constituents from their generation point to the point of discharge and considers the effectiveness of each barrier/control device. Effectiveness of each control device is measured in terms of its decontamination factor (DF). The DFs have been determined based on vendor specifications, operational data, and by projection. A considerable degree of conservatism was used when projections were made.

In the case of nonradioactive effluents, the risk to the public and the environment is also controlled by limiting the quantities of materials released. Requirements are frequently based on regulatory or technology-based release limits for the material.

A FEMP is required if the total projected dose from radionuclides for gaseous effluents has the potential to exceed 0.1 mrem/yr EDE from any discharge point or if any one regulated material discharged from a facility exceeds a reportable or permitted quantity. Based on these criteria, it was determined that a FEMP was needed for B Plant (see Appendix A). The "inventory at risk" for B Plant liquid effluents in the unlikely event of an upset condition is high enough to require that a FEMP be written for B Plant.

This page intentionally left blank.

9 3 1 2 3 6 8 1 7 9 3

2.0 FACILITY DESCRIPTION

B Plant Facility is located in the 200 East Area of the Hanford Site, which is located in the south central region of Washington State (Figure 2-1).

B Plant was originally designed to chemically process spent nuclear fuels. Radiological containment and confinement features were incorporated in the various facilities and support systems to prevent exposure of plant personnel and the general public to excessive radiation. After this initial mission was completed, the plant was modified to provide for the separation of strontium and cesium, individually, from the fission product waste stream following plutonium and uranium recovery from irradiated reactor fuels in the PUREX Plant. The recovered, purified, and concentrated strontium and cesium solutions were then transferred to WESF for conversion to solid compounds, encapsulation, and interim storage. After strontium and cesium removal, the remaining waste was transferred from B Plant to the Tank Farms.

B Plant is an operating facility that is required to ensure safe storage and management of the WESF cesium and strontium capsules, as well as a substantial radiological inventory remaining in the plant from previous campaigns. There are currently no production activities at B Plant, but there are several operating systems required to accomplish the current B Plant mission. B Plant receives and stores various chemicals from commercial suppliers for treatment of low-level waste generated at WESF and B Plant, generation of demineralized water, and conditioning of water used in heating, ventilation, and air conditioning (HVAC) units. B Plant is the reference facility for pretreatment of selected double-shell tank wastes into low-level and high-level waste streams. This pretreatment is in support of the final double-shell tank waste stabilization.

This section provides a physical description of B Plant, process descriptions applicable to this FEMP, and identification and characterization of potential source terms.

2.1 BRIEF FACILITY PHYSICAL DESCRIPTION

B Plant's main and supporting structures are shown in Figure 2-2, and their functions are listed in Table 2-1.

B Plant is comprised of three main buildings--the 221-B Processing Building; the 271-B Service and Office Building; and the 225-B Building WESF and various support buildings. The 221-B Process Building and its attached service building 271-B were constructed in 1943. Construction of the WESF was completed in 1974.

Following is a brief description of these buildings.

2.1.1 The 221-B Building

The 221-B Building is a reinforced concrete structure. The processing portion of the 221-B Building consists of a canyon and craneway, 40 process

Figure 2-1. Location of B Plant Within the 200 East Area of the Hanford Site.

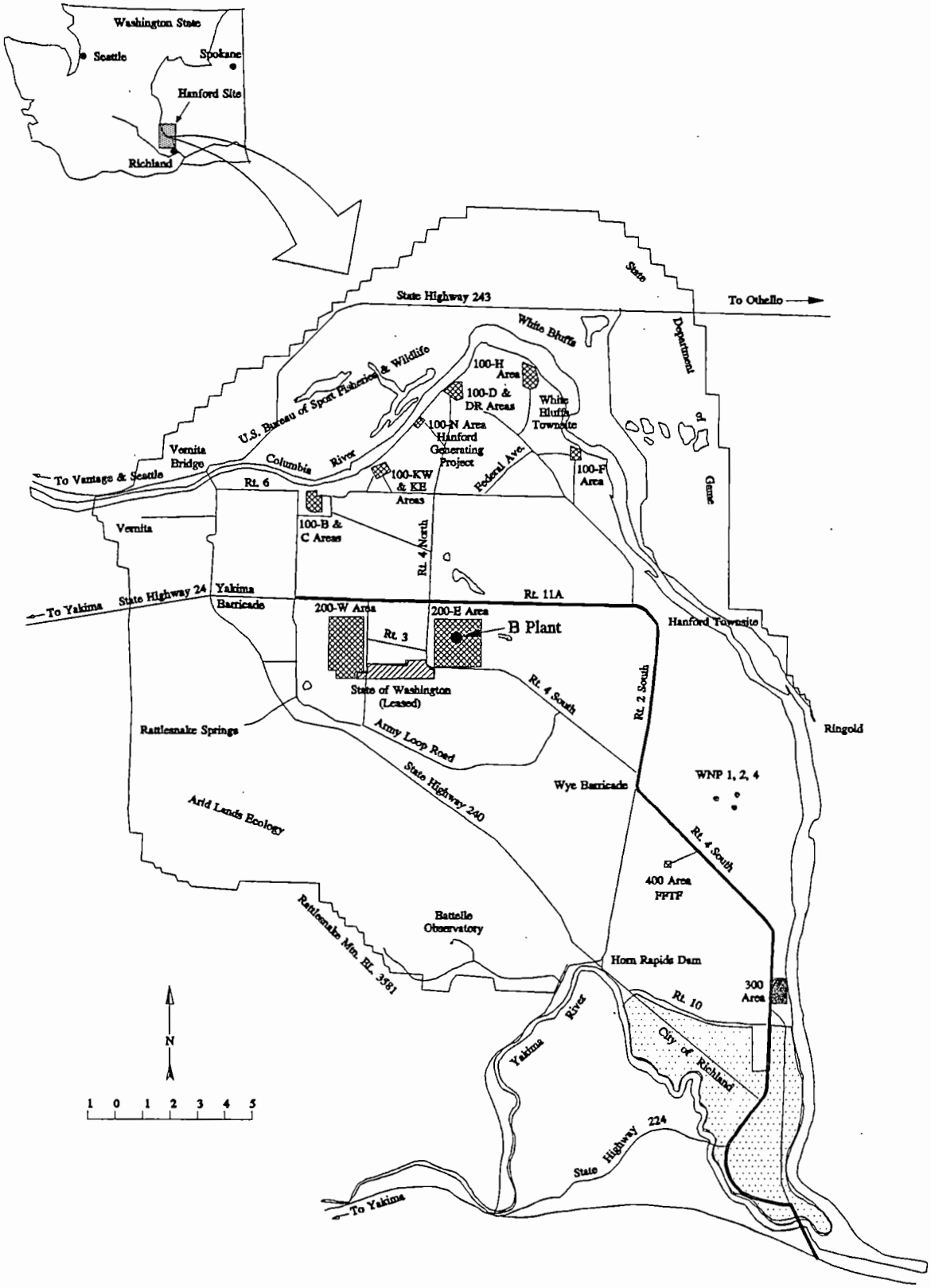

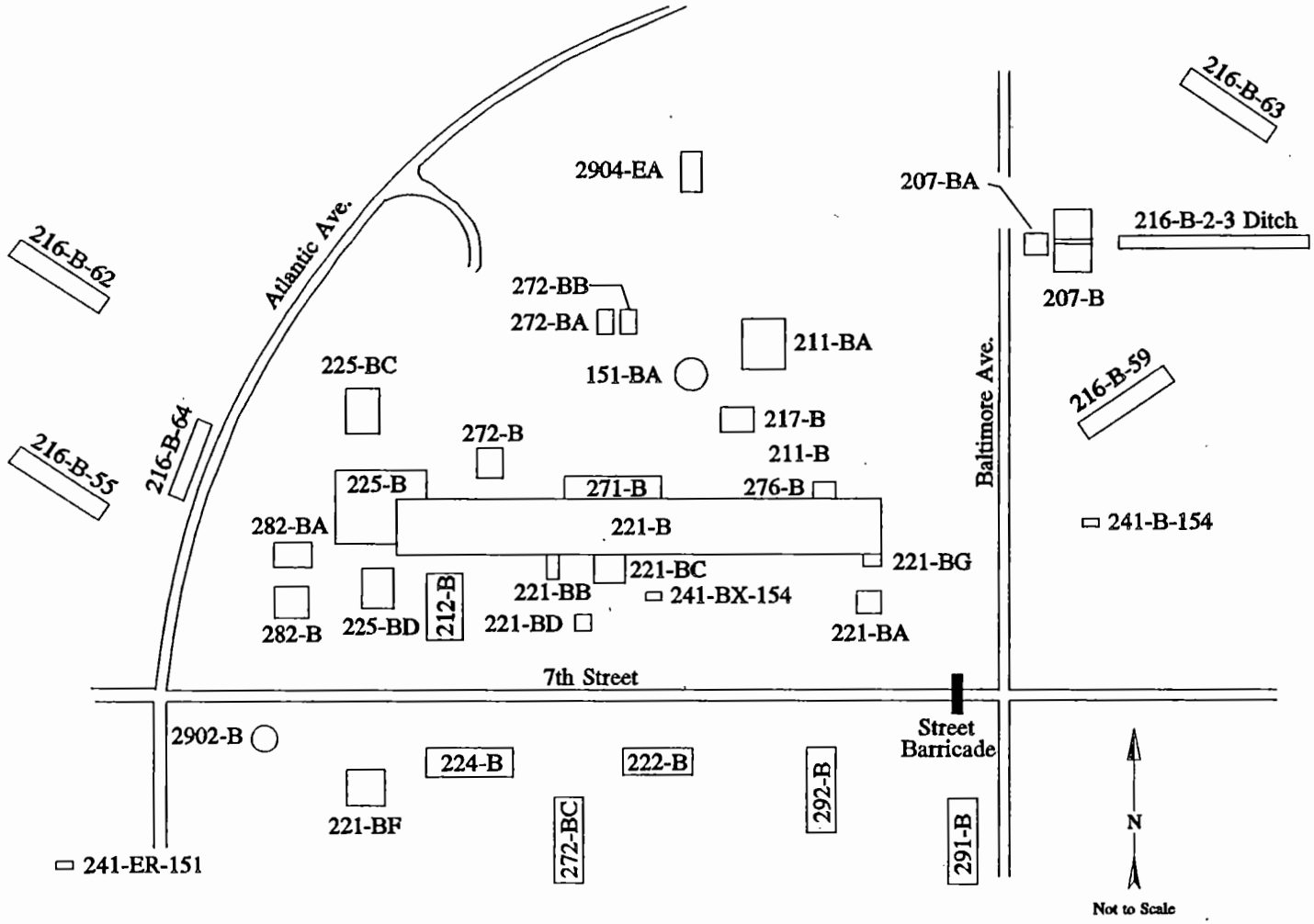

Figure 2-2. B Plant and Related Facilities.

Table 2-1. B Plant Structures and their Functions. (2 sheets)

Facility	Function
151-BA Pump Pit	Pump for the BCE neutralization facility
207-B Retention Basin	Receives CBC discharged from B Plant
207-BA Sampling Building	Contains flow totalizer and flow proportional sampler for CBC stream
211-B Chemical Tank Farm	Bulk storage area for liquid chemicals used for processing
211-BA	BCE Neutralization Facility
212-B Building	Cask station
216-B-2-3 Ditch	CBC discharge route to the 216-B-3 Pond
216-B-55 Steam Condensate Crib	Covered trench for the disposal of BCS for E-23-3 low-level waste concentrator and/or 114 header
216-B-59 Retention Basin	Emergency receiver for 15-in. cooling water line discharge
216-B-62 Process Condensate Crib	Covered trench for the disposal of process condensate (BCP) from E-23-3 low-level waste concentrator
216-B-63 Ditch	Open ditch for the disposal of BCE; emergency receiver for CBC from 207-B
216-B-64 Retention Basin	Diversion basin for BCS
217-B Demineralizer	Demineralized process water supply
221-B Building	Canyon facility for processing waste to isolate selected fission products
221-BA Monitor Building	Primary beta and gamma radiation monitor station for 15-in. cooling water stream
221-BB Condensate Building	Provides housing for process and steam condensate receiving tanks and effluent monitoring instrumentation; also primary environmental monitor for BCS stream
221-BC SWP Change House	Provides special worker protection (SWP) clothes-change area for personnel
221-BD Laundry Shed	Provides interim storage area for all used SWP laundry
221-BF Effluent Control Building	Provides batch retainment/sampling for BCP liquid waste stream
221-BG Monitor Building	Primary beta and gamma radiation monitor station for 24-in. CBC

Table 2-1. B Plant Structures and their Functions. (2 sheets)

Facility	Function
222-B Office Building	Retired facility used for administrative offices
225-B WESF	Processing, encapsulation, and interim storage of strontium and cesium capsules
225-BC Compressor Building	Compressor building for WESF
225-BD Sample Building	Sampling for WESF cooling water
241-B-154 Diversion Boxes	Retired (boxes sealed and lines blanked)
241-BX-154-Diversion Boxes	Retired (boxes sealed and lines blanked)
241-ER-151 Diversion Boxes	Route waste and other streams to and from 221-B
271-B Support Building	Annex to 221-B containing maintenance shops, administration offices, and AMU facilities for waste processing
272-B Electrical Shop	Provides area for electrical maintenance
272-BA Material Storage Shop	Provides area for procured material storage
272-BB Insulation Shop	Provides area for insulation work
272-BC Building	Pipe and electrical storage
276-B Organic Makeup and Storage	Not in use
282-B Pump House	Deep well pump for emergency raw water supply
282-BA Pump House	Deep well pump for emergency raw water supply
291-B Fans, Stack, and Filters	Exhaust and air filtration for 221-B canyon
292-B Instrument Building	Provides the stack monitoring station for B Plant main stack
2902-EA Monitor Building	Primary beta radiation and pH monitor station for BCE stream

cells, a hot pipe trench, and a ventilation tunnel. The service and operating portion of the building consists of an operating gallery, a pipe gallery, and an electrical gallery (Figure 2-3). The canyon deck elevation is 711 ft 6 in. above mean sea level (MSL). It is 303 ft above the underlying water table at 408 ft MSL, and 253 ft above the elevation of the Columbia River at 458 ft MSL (RHO 1986).

The 221-B Canyon is 810.5 ft long, 77 ft 2 in. high (with partial embedments of 22.5 ft and 16 ft on the south and north sides, respectively) and has a cross-sectional width of 66 ft 2 in., which is constant to a height of 59.75 ft and then increases to a maximum of 68 ft 2 in. at the roof top. The roof slab is of varying thicknesses from 3 ft at midspan to 4 ft at the edges where it is supported by the exterior walls. The building is supported on a 6-ft-thick concrete slab.

2.1.2 The 271-B Building

The 271-B Building, consisting of a basement and three floors, is a reinforced concrete and cement block structure 160 ft long, 45 ft wide, and 60 ft high. This building is attached to the north and center of the 221-B Building (Figure 2-2). All levels are serviced by a freight elevator.

The basement contains the building maintenance pipe and instrument shops, process air compressor room, filters for the building ventilation air supply, and electrical motor control centers for the building.

The first floor provides space for offices, a locker room, and restrooms. Also located on the east end of the first floor is the AMU and a loading dock for incoming chemicals and supplies.

The second floor contains administrative offices, a lunch room, and the dispatcher's office containing a Facility Process Monitoring Control System (FPMCS) and Operator Interface Unit (OIU).

The third floor contains the AMU area, including the bulk of the chemical make-up tanks, space for dry chemical storage, and a portable breathing air compressor. Approximately at the center of the 271-B Building adjacent to the canyon is a stairway to the roof of the 271-B and 221-B Buildings and access to the 221-B Canyon.

There are three personnel doors and one large equipment door to the outside on the ground level and two doors on each of the four floors to the corresponding floor levels of the 221-B Building. Basement doors include one personnel door at the pipe maintenance shop and one large equipment door to/from the air compressor room.

2.1.3 The 225-B Building (WESF)

The 225-B Building is a two-story structure 157 ft long by 97 ft wide by 40 ft high at the outside dimensions. The building has a combined floor area of approximately 20,000 ft^2, which includes 14,000 ft^2 on the first floor and 6000 ft^2 on the second floor.

Figure 2-3. B Plant Schematic (221-B and 271-B cut-away).

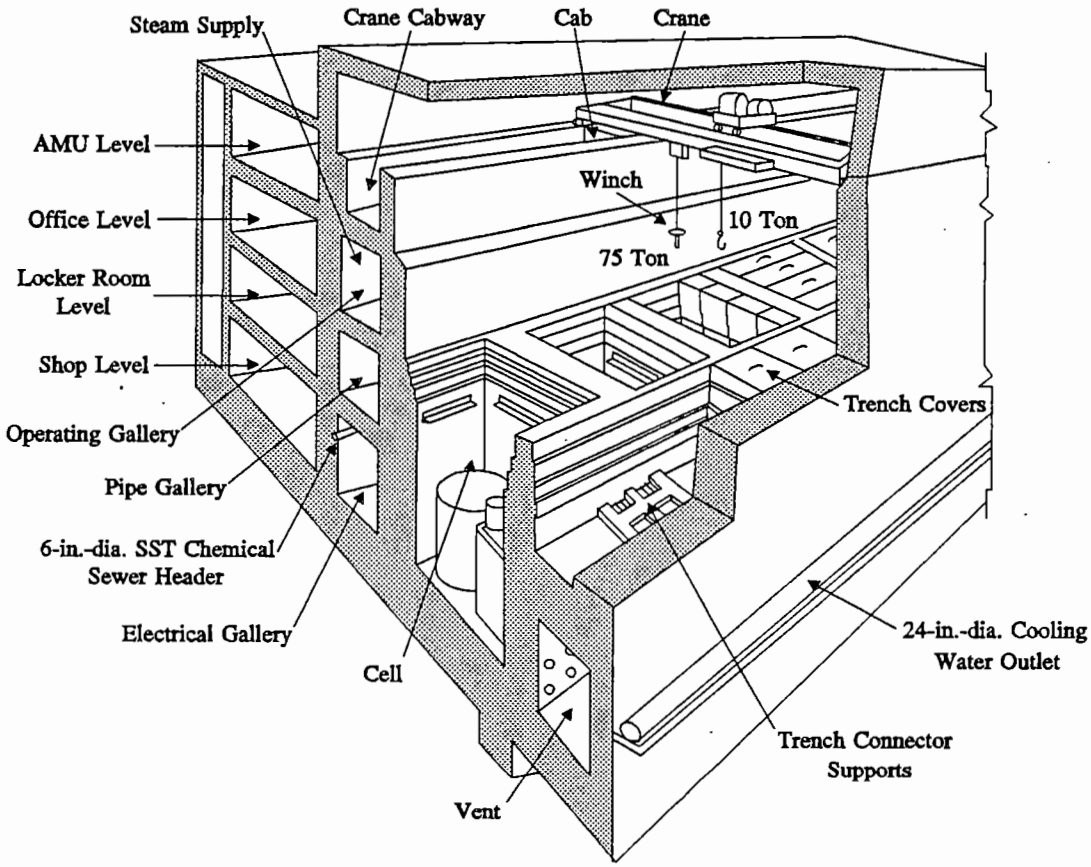

The floor plan is partitioned into several areas according to the functional requirements of each area. These areas include: (1) the process hot cell area, (2) the hot cell service areas, (3) the operating areas, (4) the building service areas, and (5) the storage pool area. The partitioned floor plan regulates the flow of personnel and material traffic throughout the building and limits access in those areas where potential contamination or radiation exposure is high.

2.2 BRIEF PROCESS DESCRIPTION

B Plant is an operating facility that is required to ensure safe storage and management of the WESF cesium and strontium capsules, as well as a substantial radiological inventory remaining in the plant from previous campaigns. There are currently no production activities at B Plant, but there are several operating systems required to accomplish the current B Plant mission. B Plant receives and stores various chemicals from commercial suppliers for treatment of low-level waste generated at WESF and B Plant, generation of demineralized water, and conditioning of water used in HVAC units. B Plant is the reference facility for pretreatment of selected double-shell tank wastes into low-level and high-level waste streams. This pretreatment is in support of the final double-shell tank waste stabilization.

The cesium and strontium feed materials to WESF were purified and concentrated in B Plant before actual processing in WESF. The cesium process system converted aqueous cesium carbonate feed solution to cesium chloride. The strontium process system converted strontium nitrate solution to strontium fluoride. Waste streams were returned to B Plant for recycling. The products were doubly encapsulated and stored underwater in storage pools. Some of these products have been shipped offsite.

Processing of cesium and strontium was completed in 1984. The WESF is currently returning capsules from offsite host facilities. Processing is limited to decontamination of equipment used in return of capsules and surveillance of stored capsules.

Additional information on the effluents pertaining to this FEMP follows.

2.2.1 Liquid Effluents

Four liquid effluent streams evolve from B Plant and WESF operations. They are (1) cooling water (CBC); (2) chemical sewer (BCE); (3) process condensate (BCP); and (4) steam condensate (BCS). Though sanitary water also discharges from the facilities, only the four streams mentioned above are discussed since the potential for release of contaminated liquids to the environment would be through one of these four liquid streams.

2.2.1.1 B Plant Combined Cooling Water (CBC). The CBC is an active stream and receives discharged raw water from a single pass through the B Plant vessel cooling coils, condensers, and WESF heat exchangers. The WESF process vessels are cooled via a closed-loop cooling system. The stream discharges to the 216-B-3 Pond. The average flowrate of the CBC is approximately 1700 gal/min. The majority of this effluent results from single pass-through cooling via WESF pool cell heat exchangers.

Raw water is taken from the Columbia River via the 182-B Export Pumping Station. The raw water is pumped into a 42-in.-dia. line at the Columbia River site; the pipe reduces to 24-in. in dia. where it enters the 282-E Pumphouse and reservoir in the 200 East Area. From the 282-E Facility, the water is pumped below grade north along Baltimore Avenue to B Plant (Figure 2-4). At the southeast corner of the 221-B Building, the header separates west through a 10-in.-dia. header and north through a 12-in.-dia. header to the northeast corner of the 221-B Building. Raw water routed to the west passes south of the 222-B and 224-B Buildings, then north to the front of the 221-B and 225-B Buildings. Three headers (3 in., 4 in., and 10 in.-dia.) provide raw water supply to the WESF, entering on the north, east, and west sides. The raw water for the 221-B Building enters the building at both the east and west ends via 12-in. and 10-in.-dia. headers, respectively. A 10-in.-dia. header, located in the B Plant operating gallery, runs the entire length of the 221-B Building and supplies cooling water to the process cell vessels (tank cooling coils and condensers). The entry level on the east end is at the pipe gallery level. The west end entry is at the electrical gallery level near Cell 40. The pressure, at both the east and west ends of the 221-B Building operating gallery, is approximately 150 lb/in.^{2} gage.

In the event of loss of raw water supply from the 282-E Facility reservoir, B Plant and the WESF have two emergency wells. Two diesel-driven backup Emergency Well Pumps 282-B and 282-BA Pumphouses (see Figure 2-4) can supply the necessary volume of raw water to meet the minimum process cooling requirements for B Plant and the WESF. Each of these emergency wells is tested periodically for operation.

The cooling water discharged from B Plant enters one of two lines, a 24-in.-dia. line, or a 15-in.-dia. line. These cooling water lines flow east from B Plant and combine into a common 24-in.-dia. line just north of the 216-B-59 Crib (see Figure 2-4). This single line-designated as the combined CBC continues northward and discharges first into the 207-B Retention Basin, then on to the 216-B-3 Pond via the 216-B-2-3 Ditch.

The WESF cooling water is discharged to the 24-in.-dia. line. The WESF does not contribute to the 15-in.-dia. line.

2.2.1.2 B Plant Chemical Sewer (BCE). The BCE was named for its original design intent. Its use for removal of chemicals from work areas was abandoned before 1984. The BCE does not communicate with the radioactive processing areas of B Plant and does not come in contact with 211-B Chemical Storage Tank Farm inventory.

B Plant receives and stores various chemicals from commercial manufacturers for use in the pretreatment of defense wastes, generation of demineralized water, and conditioning of water used in HVAC units. The BCE can receive chemical spills, water flushes, and other effluents from drains in

the 221-B, 217-B, 271-B Buildings and the 211-B Area where these various chemicals are stored and used (Figure 2-5). However, administrative controls are in place to preclude the introduction of these chemicals into the BCE stream. The BCE can also receive steam condensate, cooling water, HVAC unit wash water, sanitary water, and other effluents from the WESF, 225-BC Air Compressor Building, 212-B Cask Station, 276-B Building, 2902-B Sanitary Water Tank, 222-B HVAC system, and 224-B HVAC and floor drains.

Starting from the point of discharge to its point of origin, the BCE consists of a main 15-in. vitrified clay pipe (VCP) that extends north of the 221-B Building to the 216-B-63 Ditch, which is located approximately 2,500 ft northeast of 221-B Building (Figure 2-5). The BCE has several manholes where subheader piping join the main sewer. At manhole number 14, which is located north of the 211-B Chemical Storage Tank Farms, the 15-in. VCP is separated into two 10-in. reinforced thermosetting resin pipe (RTRP) headers and an 8-in. VP. One of the 10-in. RTRP headers traverses south from manhole number 14 and connects to a 6-in. RTRP header that runs between the 211-B Area and the 221-B Building.

The 6-in. header collects effluents from the sodium hydroxide storage tank area pump basin, sodium hydroxide storage tank cooling coil effluent water, steam condensate and wash water from 221-B HVAC units (east side only). Discharge from 221-B 6-in. stainless steel header in the electrical gallery currently is routed to Cell 10 in 221-B but can be valved for discharge to the 216-B-63 Ditch.

The 8-in. VCP header collects effluent from regeneration of the demineralized water unit in the 217-B Building and from ditches in the 211-B Chemical Storage Tank Farms.

The second 10-in. RTRP header extends west, parallel to the 221-B Building, to manhole number 10, which is located northwest of the 271-B Building. This header receives effluents from the floor drains and steam condensate discharge from the 271-B Building from a 4-in. RTRP subheader. The 10-in. RTRP traverses south from manhole number 10 and collects cooling water from the air compressors in the 271-B Building and then traverses west parallel to the 221-B Building. The 10-in. RTRP header joins a 10-in. VCP header at manhole number 8, turns south at the northwest corner of the 225-B Building, extends 150 ft and turns east ending 10 ft east of the 222-B Building. This 10-in VCP header collects steam condensate and wash water from the 221-B HVAC units (west side only); steam condensate from steam lines in the 221-B Building; steam condensate from the 225-B HVAC system and 225-BC Compressor Building; AMU tank overflow and floor drains from WESF; and water overflow from the 2902-B Sanitary Water Tank, 222-B HVAC system, 224-B HVAC, and floor drains. The 10-in. VCP header also collects rain water from a street drain located northeast of the 2902-B water tank and south of Seventh Street.

The BCE drains into the 216-B-63 Ditch where the discharge is disposed through transpiration (absorption to the soil or by evaporation). The BCE stream is discharged to the 216-B-63 Ditch at an average flowrate of less than 150 gal/min.

Figure 2-4. CBC System.

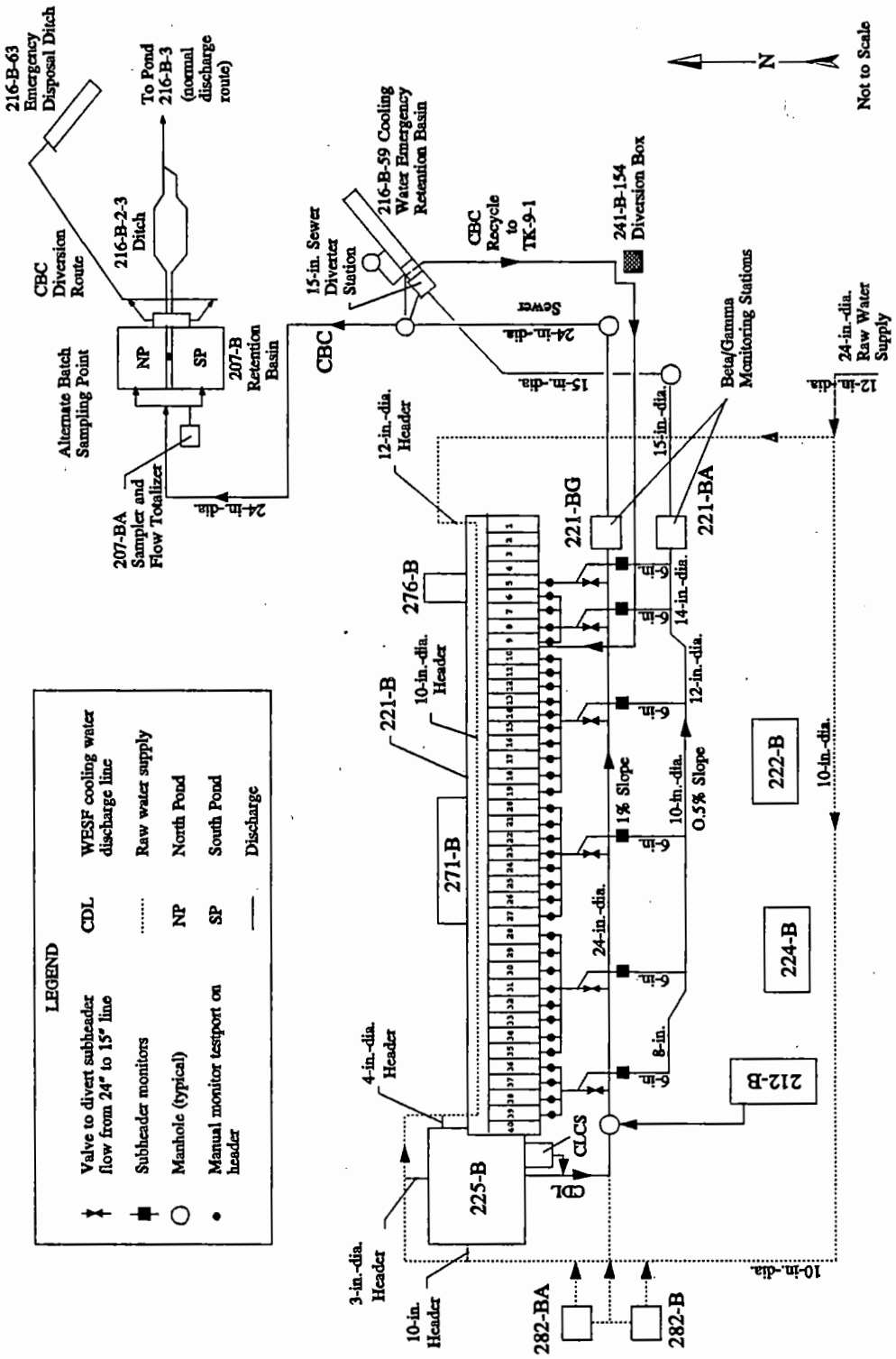

Figure 2-5. BCE System.

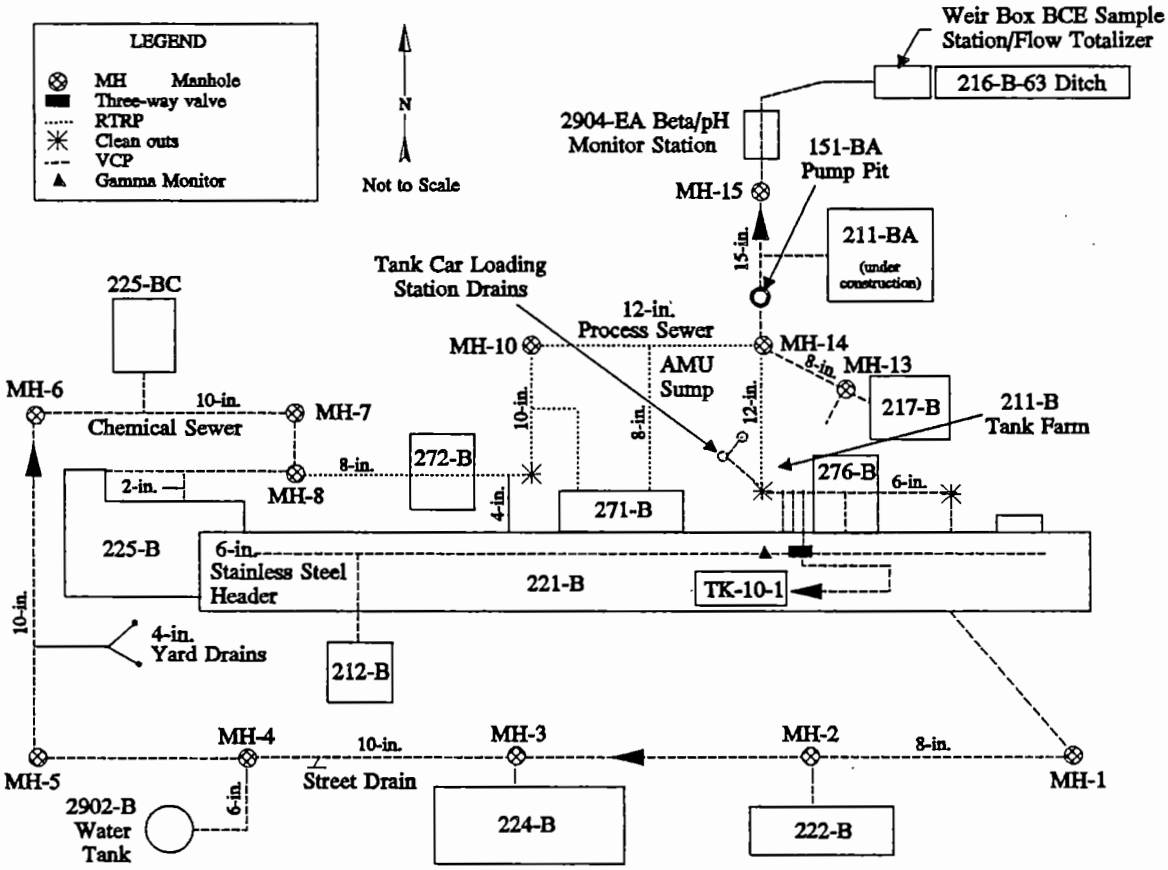

2.2.1.3 B Plant Process Condensate (BCP). The low-level radioactive waste concentration system at B Plant consists of a 14,000-gal low-level waste receiver tank (TK-24-1) in Cell 24, the low-level waste concentrator and waste concentrator receiver tank (TK-23-1) in Cell 23, and concentrated waste receiver tanks in Cell 25. The low-level waste concentrator comprises three distinct units: (1) the E-23-3 Evaporator, (2) the D-23-2 Deentrainer, and (3) the E-23-4 Condenser (Figure 2-6). During operation of the waste concentration system, the low-level liquid waste collected in the receiver tank TK-24-1—is mixed by two tank-mounted motorized agitators. The solution pH is adjusted to 9.5 or greater, by the addition of 19M sodium hydroxide, to provide better pressure control in the E-23-3 Evaporator and thus improve separation of water from the waste solutions. This feed solution is pumped from TK-24-1 into the E-23-3 Evaporator at a rate of 25 to 30 gal/min during steady-state operations (Figure 2-7).

The E-23-3 Evaporator is a vertical, single-pass, shell-tube, thermal-recirculated, and steam-heated evaporator. The evaporator has two removable stainless steel tube bundles in which the steam flowing through the shell side evaporates the water from the waste solution in the tube side. Water in the waste solution passing through the tube bundles in a noncontact process is evaporated at a rate of 25 to 30 gal/min. The BCP from the tube bundles is discharged through 221-BB, where it is monitored, on to 221-BF, where it is sampled and batch released to the 216-B-62 Crib (Figure 2-8).

A draft tower is situated between the tube bundles. The liquid, induced by boiling, circulates down the draft tower and back into the tube bundle section. An overflow column, located next to the draft tower, collects the concentrated waste (CW) and gravity drains into the CW receiver Tank TK-23-1. Equipment for measuring the liquid volume and specific gravity of the solution in the E-23-3 Evaporator is located in the overflow column.

The CW collected in TK-23-1 is transferred by a steam jet into the CW collection tanks in Cell 25. The CW is then transferred to underground storage in the Tank Farm.

The vapor overheads from the E-23-3 Evaporator passes through the D-23-2 Deentrainer vessel, located above the E-23-3 Evaporator (Figure 2-6). The deentrainer is designed to reduce the concentration of contaminants in the evaporator feed by a factor of $1 \times 10^{+07}$ by removing entrained liquid in the vapor (RHO 1986). Deentrainment of the liquid is accomplished by two demister pads and fogger spray nozzles installed in the D-23-2 Deentrainer. Both pads are made of knitted wire mesh. The upper pad also consists of multifilament stainless steel yarn fiber co-knitted with stainless steel wire. The demister pads allow the deentrainer vessel to collect most of the liquid that escapes from the evaporator. Demineralized water pressurized to 400 lb/in.^{2} (gage) and heated to 210 °F is pumped at a rate of 5 gal/min to the fogger nozzles. The fogger nozzles atomize the demineralized water to produce a mist "fog" between the two demister pads. This "fog" aids in agglomeration of the entrained liquid that pass through the first pad. The larger agglomerated liquid droplets that come in contact with the second pad then become deentrained from the vapor. The deentrained liquid drains back into the E-23-3 Evaporator (WHC 1990c).

Figure 2-6. E-23-3 Concentrator System.

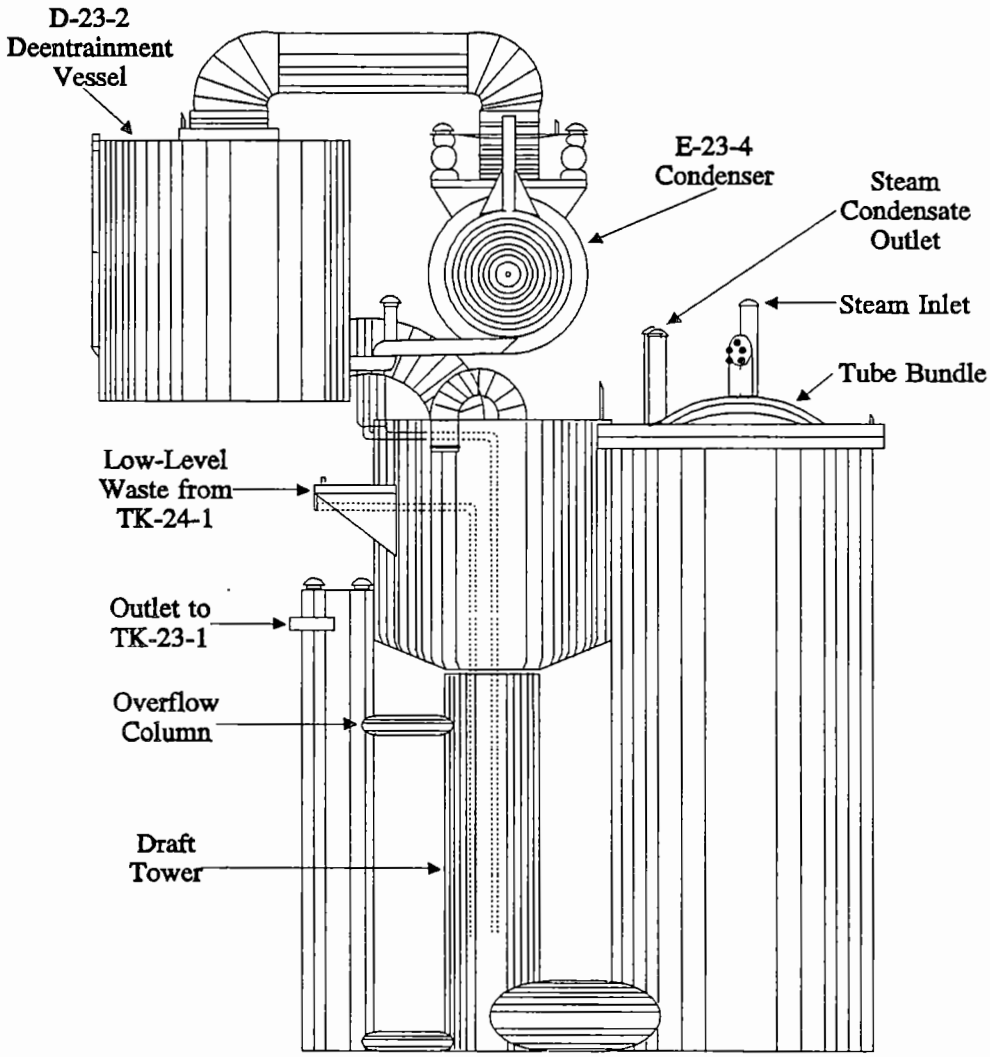

Figure 2-7. BCP Flow Diagram.

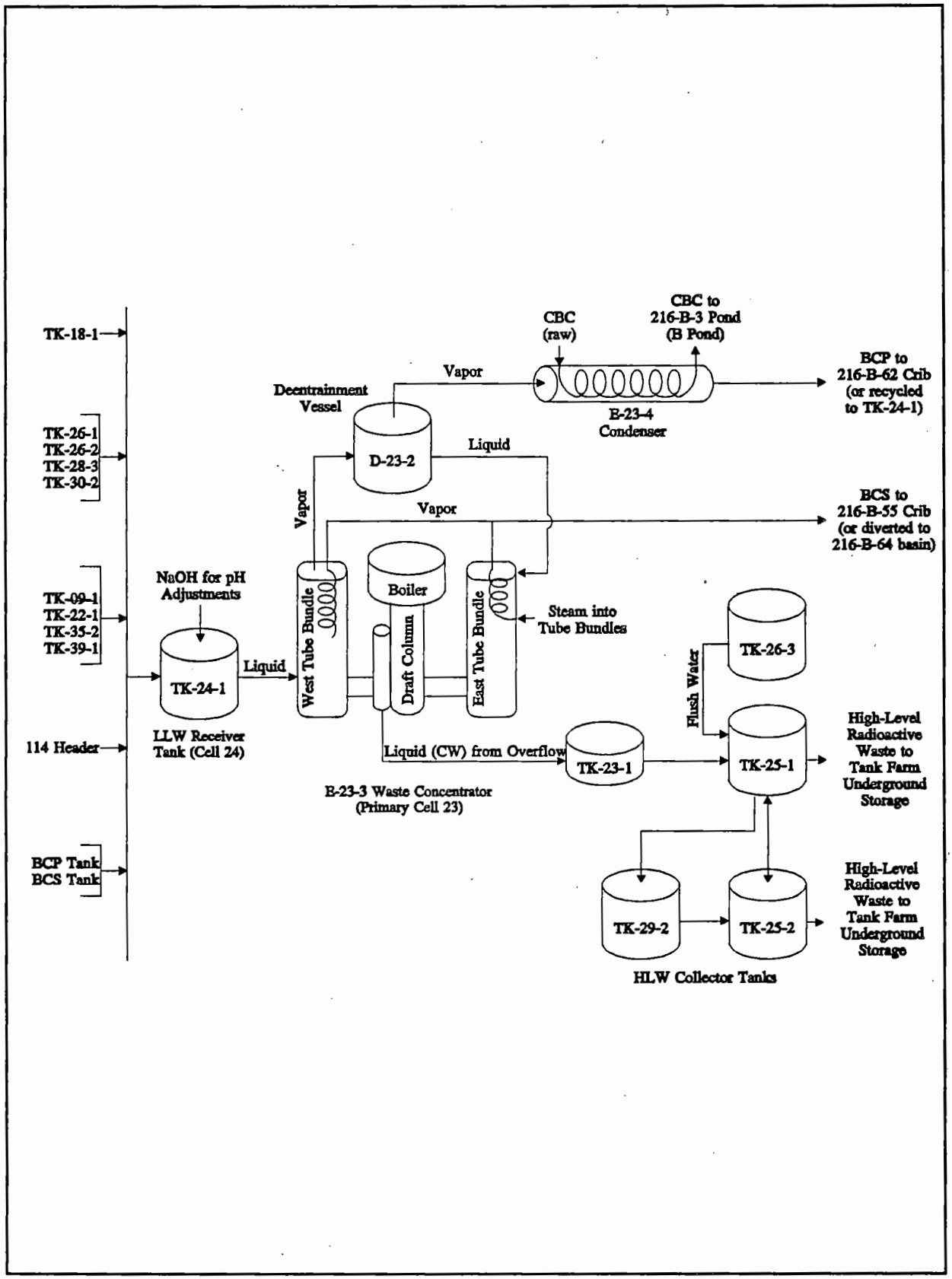

Figure 2-8. BCP Flow Diagram.

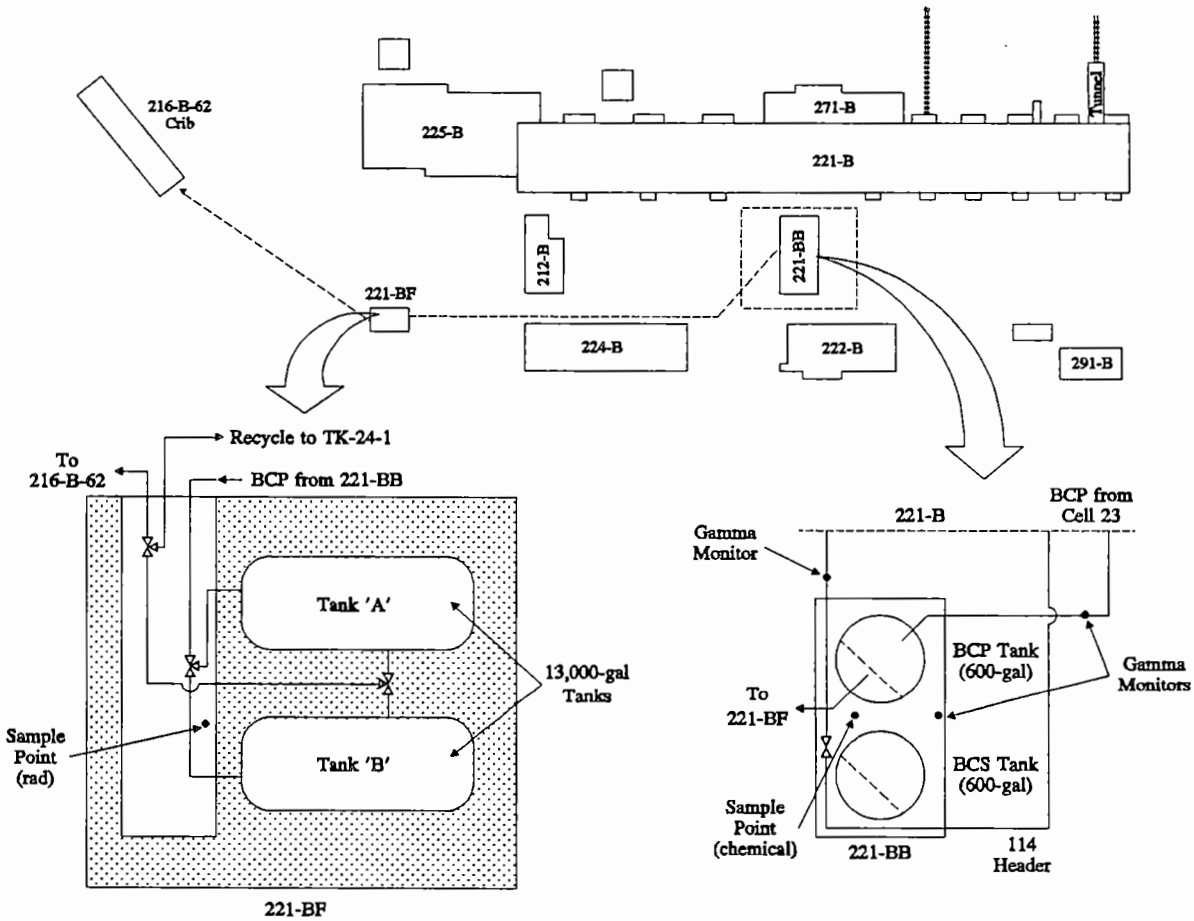

The process vapor passing through the deentrainer is then condensed in the E-23-4 Condenser. The condenser is a single-pass countercurrent unit with raw water as the low temperature medium.

Disposition of the BCP discharge route is based on laboratory analysis of the BCP samples taken in the 221-BF Building. The BCP is discharged to the 216-B-62 Crib after being batch sampled and analyzed for compliance with radiological and chemical discharge limits [administrative control limits (ACLs)].

2.2.1.4 B Plant Steam Condensate (BCS). The BCS is the steam condensate collected from the condensed steam used during operation of the low-level waste concentrator (E-23-3). The BCS is evolved only during E-23-3 operations.

The B Plant receives steam from the 200 East Powerhouse. This steam is adjusted to different pressures for building heating and for various process purposes (e.g., steam-operated jet transfers, vessel ventilation systems, and process concentrators). The steam is delivered by a 12-in.-dia. pipe along Baltimore Avenue at 225 lb/in.^{2} (gage) (Figure 2-9). The steam is routed through pressure-reducing valves (PRVs) to reduce the pressure to 100 lb/in.^{2} (gage) for B Plant use. To preclude pressurization, the steam supply is further regulated at the concentrator between 10 and 30 lb/in.^{2} (gage).

The 3000-gal-capacity concentrator is a single-pass shell and tube heat exchanger with process solution on the tube side and saturated steam, flowing counter currently, on the shell side. The heat is supplied by the steam to (1) raise the process solution feed from its initial temperature to the boiling temperature, (2) provide thermodynamic energy to separate liquid solvent (water) from the feed, and (3) vaporize the water. During operation of the E-23-3 Concentrator, the steam is saturated, condenses along the tubes, and is discharged as BCS from the south side of the plant at an average flowrate of 30 to 40 gal/min. The BCS then flows through a 4-in. header below grade to a small tank (600-gal-capacity) located in the 221-BB Building enroute to the 216-B-55 Crib located west of B Plant (Figure 2-9).

2.2.1.5 B Plant Sanitary Sewer Systems (SSS) (2607-E3 and 2607-E4). Sanitary waste generated within the B Plant complex is drained to septic tank-field systems within the 200 East Area (Figure 2-10). This disposal is in adherence with Benton County Health Department Guidelines (RHO 1986).

B Plant SSS 2607-E-3 is located approximately 500 ft north of B Plant. The septic tank-field system is fed by an 8-in. VCP sanitary sewer extending north of the 221-B Building. This 8-in. VCP is connected to an 8-in. The VCP header that runs parallel to the 221-B Building.

Sanitary sewage from the 221-B Building is routed to this header from two 6-in. VCP sanitary sewers. The 8-in. header extends west of the 225-B Building, then heads south and then east between the 221-B Building and the 224-B and 222-B Buildings. Sanitary sewage from the 224-B and 222-B Buildings is also routed to this sanitary sewer header.

A smaller septic tank-field system 2607-E-4 is located adjacent to, and east of, the 221-B Building. This sanitary sewer system was constructed to replace the abandoned 2607-E-4 system that was located northeast and adjacent

to the 221-B Building. This subsurface disposal system collects sanitary sewage effluent from a 4-in.-dia. cast iron pipe that gravity flows to a 1000-gal fiberglass septic tank. Liquid sewage flows to the 20-ft by 70-ft tile field where disposal is conducted by transpiration (absorption and evaporation).

2.2.1.6 French Drains. French drains are receiver sites of steam condensate from traps prior to its use in B Plant. Discharges to French drains are not sampled nor recorded for flow. This is because the effluents are judged not to have a potential of exceeding 4% of the derived concentration guide (DCG) (DOE 1990b) on a yearly average.

Figure 2-9. BCS System.

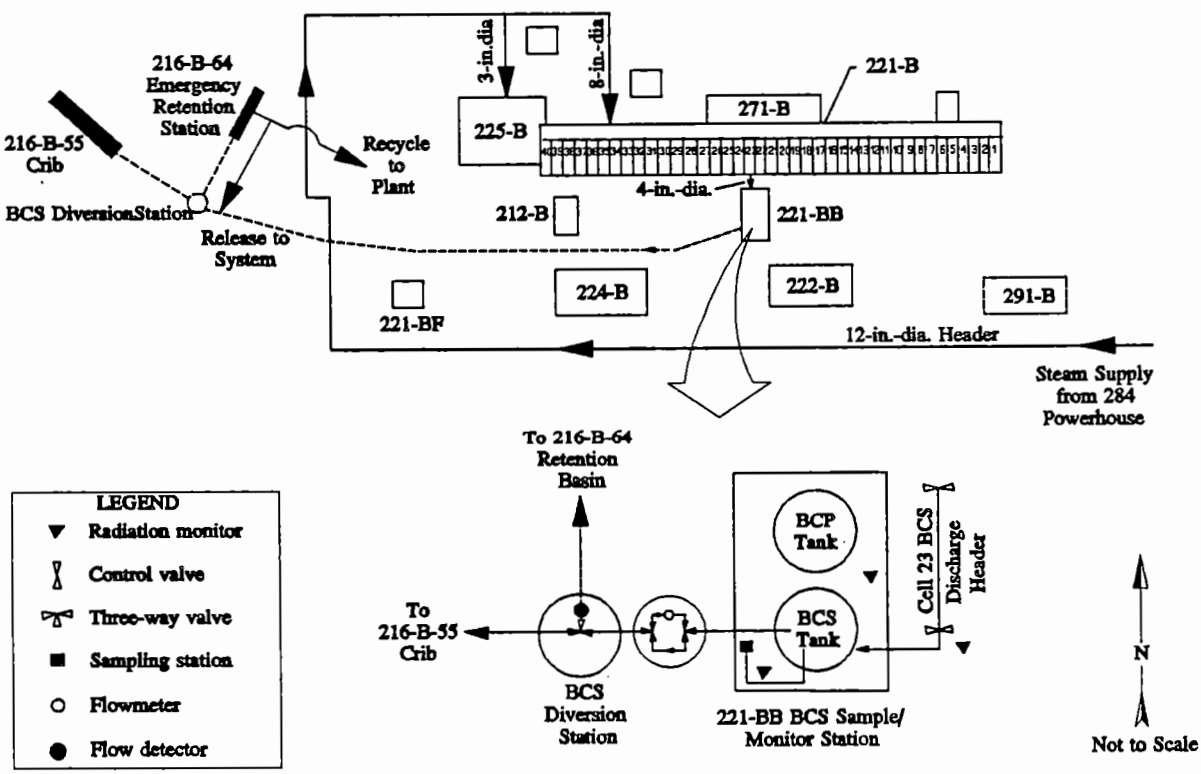

Figure 2-10. B Plant Sanitary Sewer System.

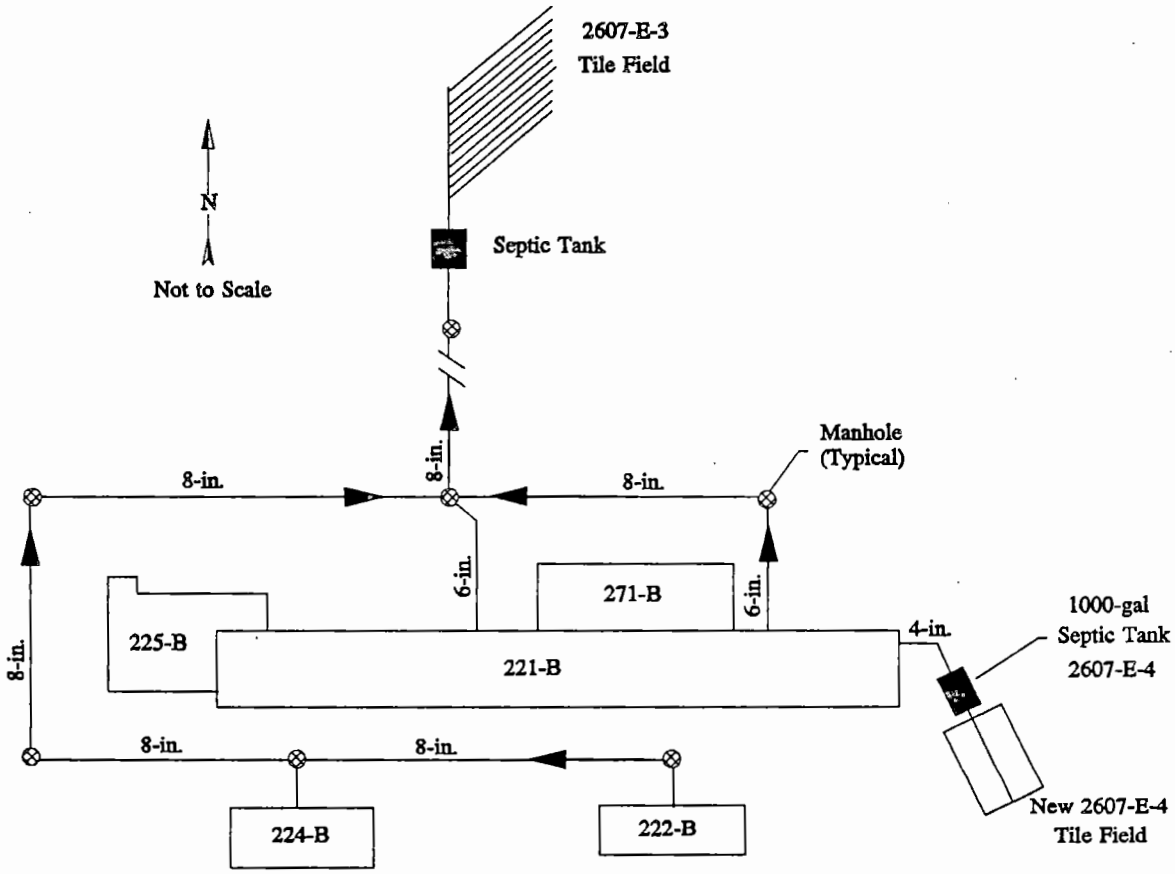

2.2.2 Gaseous Effluents

The gaseous effluent release points for the B Plant/WESF facilities are listed below and include stacks, gallery exhausters, the WESF emergency jet, bulk chemical storage tank vents, and AMU and scale tank vents.

- **Stacks**
  - 291-B-1 Stack
  - 296-B-5 Stack
  - 296-B-10 Stack
  - 296-B-13 Stack
  - 296-B-14 Stack
- **Gallery Exhausters**
  - 296-B-21
  - 296-B-22
  - 296-B-23
  - 296-B-24
  - 296-B-25
  - 296-B-26
  - 296-B-27
- **WESF Emergency Jet (296-B-12)**
- **Bulk Chemical Storage Tank Vents (211-B)**
  - Vent on Tanks 101, 102, and 103
  - Vent on Tank 111
  - Vent on Tanks 120, 121, and 122
  - Vent on Tanks 125, 126, 127, and 128
  - Vent on Tanks 131, 132, and 133
  - Vent on Tanks 141, 142, and 143
  - Vent on Tank 161
  - Vent on Tank 172
  - Vent on Tank 173
  - Vent on Tank 191

- **AMU and Scale Tank Vents (271-B)**
  - Vent on Tank 101
  - Vent on Tank 102
  - Vent on Tanks 301 and 301A
  - Vent on Tanks 302 and 318
  - Vent on Tanks 304 and 320
  - Vent on Tanks 305 and 321
  - Vent on Tanks 309, 312, 313, 314, and 315
  - Vent on Tanks 310, 311, and 316
  - Vent on Tank 401
  - Vent on Tank 402
  - Vent on Tank 403
  - Vent on Tanks 501, 502, and 503 (via BCE)
  - Vent on various scale tanks throughout 221-B.

Though vents from 211-B and 271-B also discharge from the facilities, only the remaining seven streams are discussed since the potential for release of gaseous radioactive contamination to the environment would be through one of these seven gaseous streams.

2.2.2.1 B Plant/WESF Stacks. Locations of B Plant/WESF stacks are shown in Figure 2-11. The paragraphs below provide a brief description of these stacks.

291-B-1 Stack (221-B Canyon Ventilation Exhaust)--The main canyon and cells of the 221-B Building are exhausted via the 200-ft 291-B-1 Stack to the atmosphere. Figure 2-12 shows the general movement of air through the system. This system removes process-generated heat and controls the path of the release of contaminated air from the canyon and the adjacent 212-B Cask Station.

The filtered and washed supply air enters near the top of the canyon, flows downward around process cell cover blocks into the cells, and through openings into the canyon exhaust air tunnel (Figure 2-13.) The offgases from various process vessels, which are collected and filtered by the No. 1 Vessel Ventilation System (VVS#1), are also discharged to the canyon exhaust air tunnel. In addition, a 24-in.-dia. interconnection to this exhaust-air tunnel provides exhaust ventilation for 224-B Building process vessels that are no longer in service.

Exhaust air is triple, high-efficiency particulate air (HEPA) filtered by the 291-B "D" Filter System (RHO 1986), continuously monitored, sampled, and discharged from the 291-B-1 Stack. Filter Systems "A", "B", and "C" were used prior to the "D" Filter System currently in service. Based on past emission records, the radionuclide concentrations in this effluent during normal operation are expected to be well below the guideline values required by DOE Order 5400.5 at the point of release (DOE 1990b). Extensive system characterization and maintenance were performed during 1982–1983, and the radionuclide sampling and monitoring systems for this stack presently are considered to meet all requirements specified in DOE Order 5400.5.

An emergency steam-turbine-driven exhaust blower is available as backup for the canyon ventilation system. An exhaust air sand filter paralleling the "D" HEPA Filter System also is maintained in standby status and is isolated from the HEPA system by water seals.

296-B-5 Stack (221-BB Exhaust System)--The 221-BB liquid effluent support building is exhausted by a 2000-ft^3/min-capacity, single-stage HEPA filtration system via the 296-B-5 Stack. The effluent is continuously monitored and sampled by a generic system (RHO 1985b). An evaporative cooler provides supply air.

296-B-10 Stack (WESF)--The 296-B-10 Stack is a 42-in.-dia. by 70-ft atmospheric discharge stack and handles the exhaust of HVAC systems of the 225-B (WESF) Building (Figure 2-14). The ventilation system of WESF is designed to provide airflow patterns so that air movement throughout the building is from areas of lesser radioactivity to areas of greater radioactivity. All potentially contaminated areas are maintained at a negative pressure with respect to the atmosphere so that air flows into the building at all times. The K-1 HVAC system provides ventilation for the high-risk operating and service areas with contaminated air being filtered through the K-1 filter building. The K-3 HVAC system provides ventilation for the highly contaminated process cells and the canyon area. The K-4 HVAC system provides ventilation for the capsule storage pool area, and the air is filtered through the K-1 filter building.

K-1 HVAC Supply and Exhaust System--The K-1 system supplies outside air on a once-through basis (no recirculation) to the 225-B Building HVAC room. The supply air is filtered, heated or cooled appropriately, and distributed through a duct network to the serviced areas. A similar duct network provides an exhaust flowpath from these areas. Air balance control and optional isolation of the rooms is accomplished by installed, manually-controlled dampers in all supply and exhaust ducts.

The exhaust of the K-1 system to the 296-B-10 Stack sequentially passes through two stages of prefilters and two stages of HEPA filters located in the K-1 filter building. The DF for normal operation of the system is conservatively rated to 1E x 10^{+06} (RHO 1986).

K-3 HVAC Supply and Exhaust System--The K-3 supply system provides air to process cells to maintain air flow from areas of lesser to higher contamination in the canyon and process cells. The system provides ventilation for the contaminated process cells and canyon area and is designed to meet two sets of operating conditions: (1) routine operation, when cell cover blocks are in place; and (2) nonroutine operation, when one or more cover blocks are removed from a cell to provide access to the process cells.

The K-3 supply air from the WESF HVAC room is distributed via ductwork to the canyon area on a once-through basis. A portion of this ventilation air enters each cell via one of two 6-in.-dia. stainless steel ducts that are imbedded in the canyon floor. At the cell duct inlet, the ventilation air is filtered by a HEPA filter.

Figure 2-11. B Plant/WESF Area Stacks.

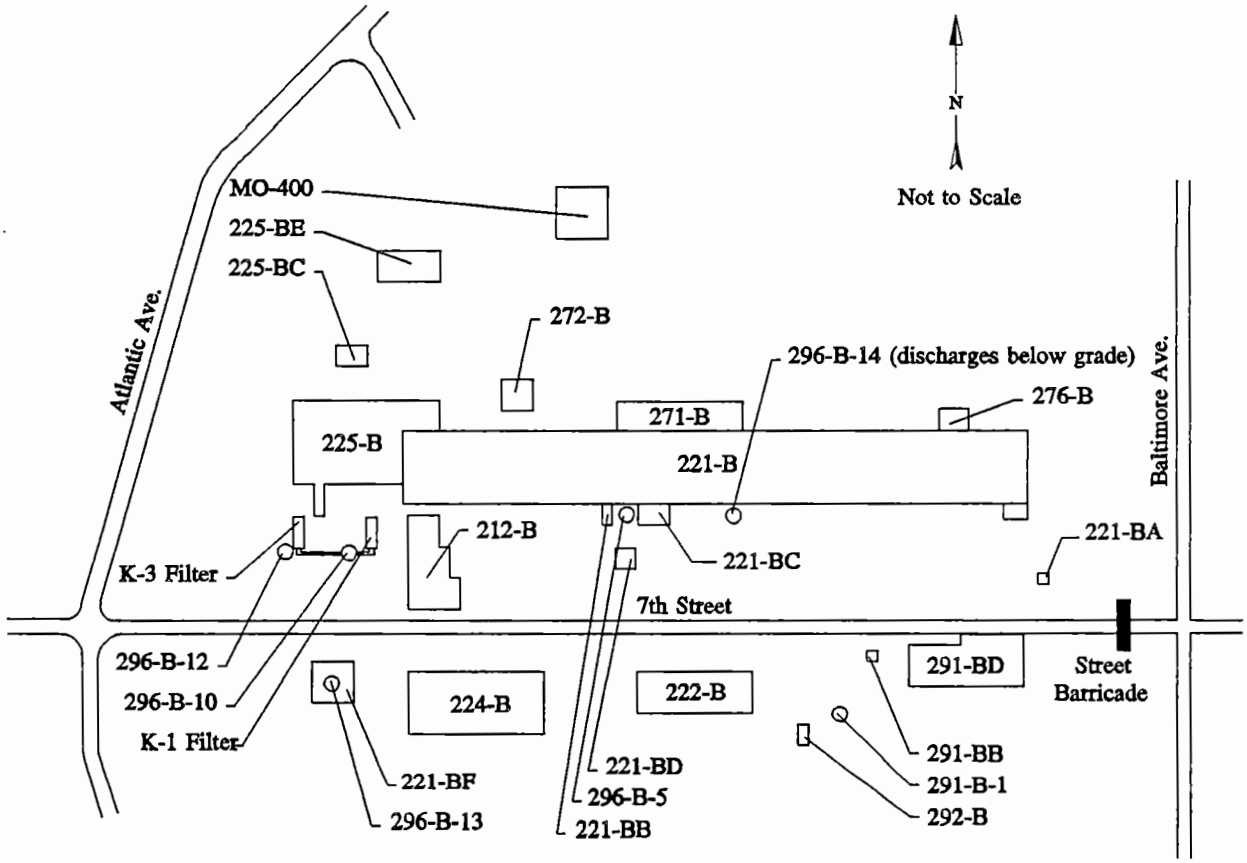

Figure 2-12. Canyon Exhaust Ventilation System.

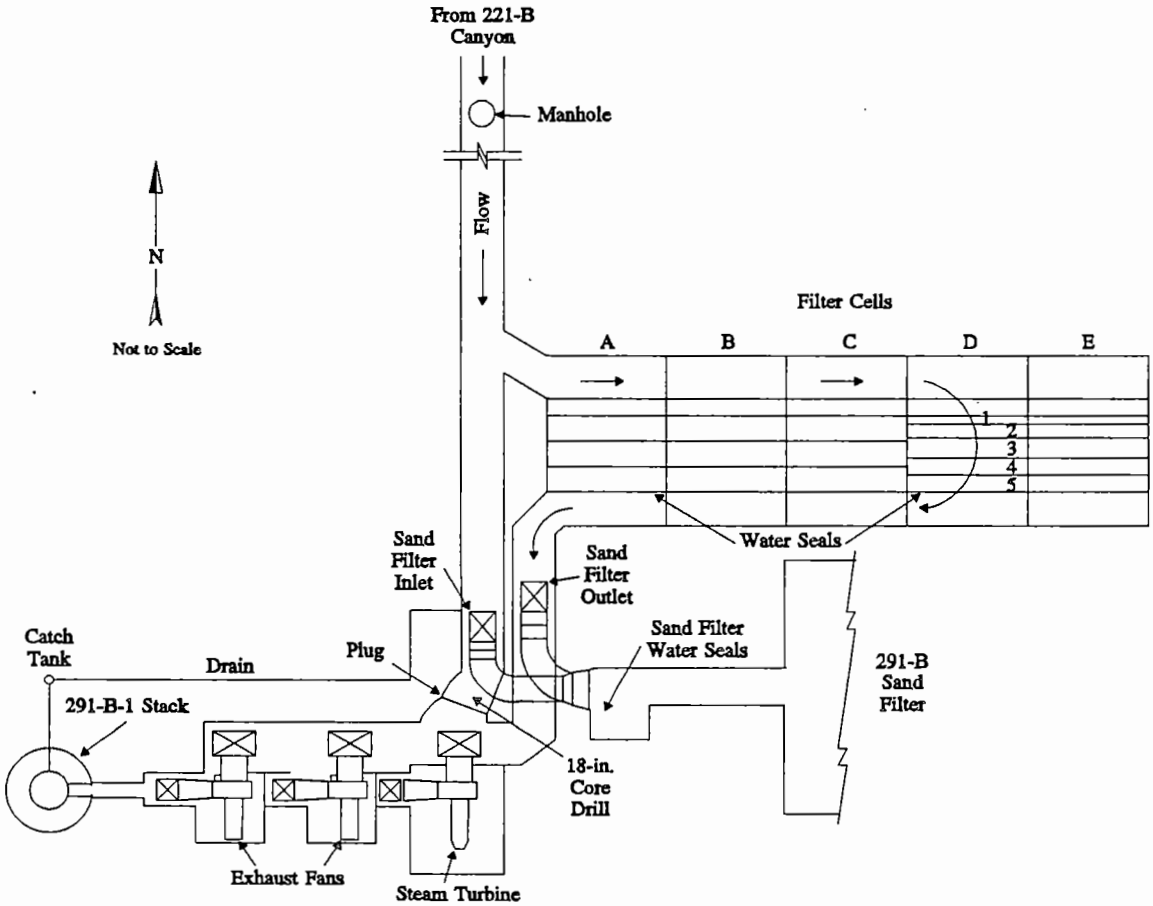

Figure 2-13. Flow Path for Filtered Air Through the 221-B Canyon System.

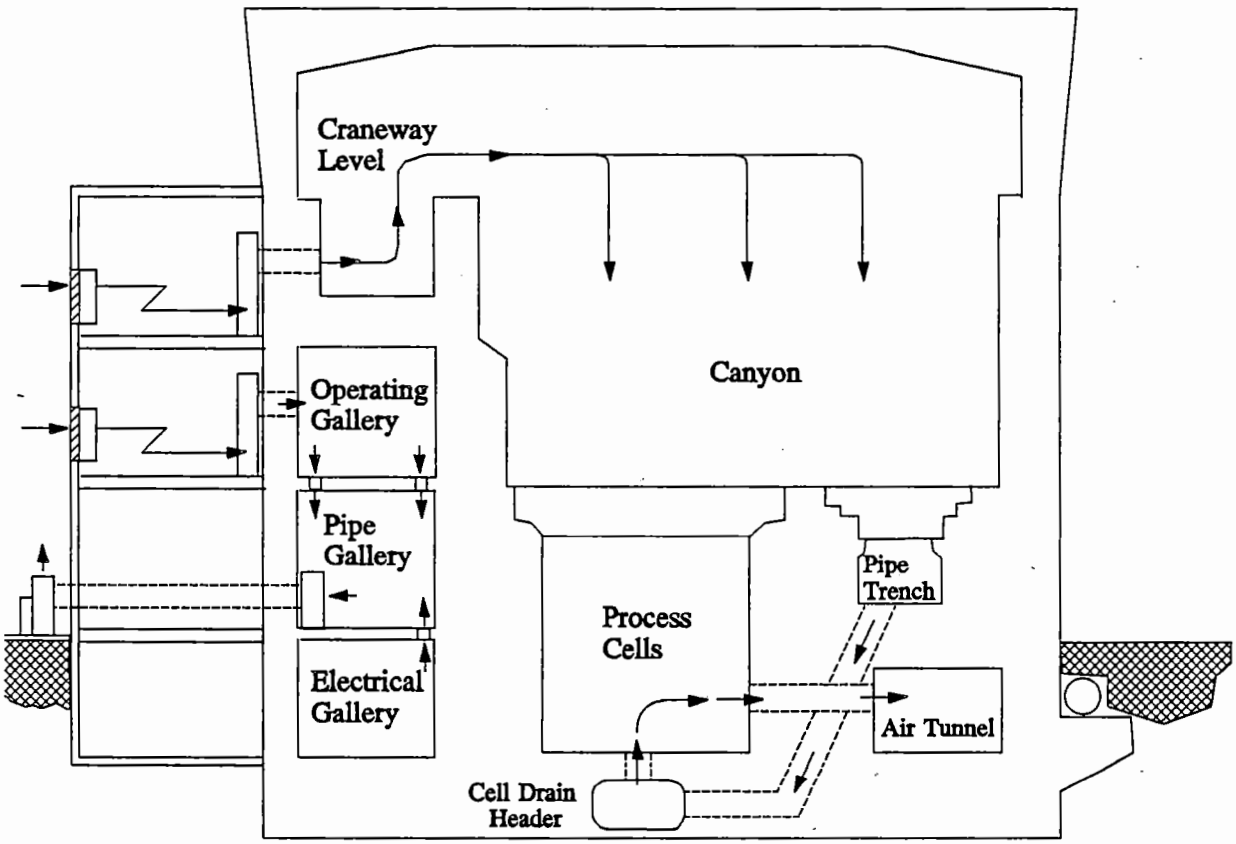

Figure 2-14. 296-B-10 Gaseous Effluent Flowsheet.

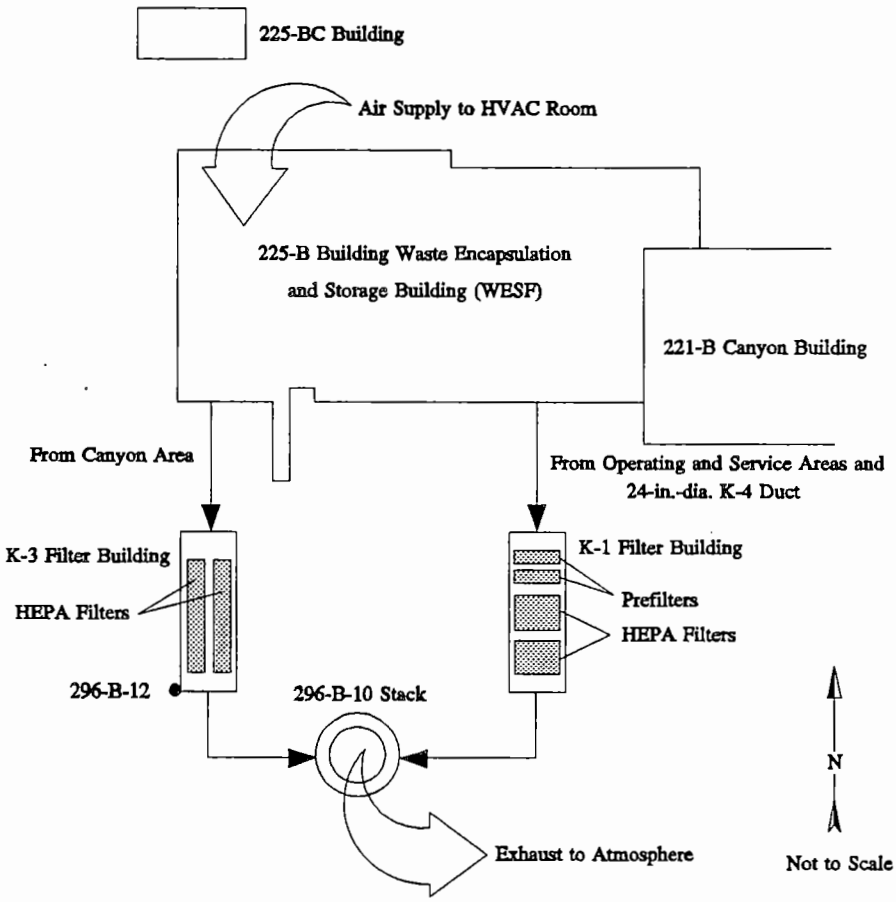

The cell air is exhausted through two in-cell HEPA filters. Cell exhaust dampers are provided in each cell to control the air flow and the pressure within each cell. These dampers are controlled remotely from the operating gallery. The cell ventilation air is exhausted through a 24-in.-dia. exhaust header located under the process cells and connects to the canyon exhaust duct, which terminates at the K-3 filter. The final K-3 filtration consists of two parallel filter housings. One unit is operating, and the other is on standby. Each of the filter housings contain two stages of HEPA filtration, consisting of six HEPA units in parallel in each stage (Figure 2-15).

K-4 HVAC Supply and Exhaust System--The K-4 system supplies approximately 8320 ft^3/min of ventilation air to the storage pool area on a once-through basis. The air supply equipment, which consists of a bank of 80% and 35% National Bureau of Standards (NBS) filters, a preheat coil, an evaporative cooler, a reheat coil, and a centrifugal fan, are located on the roof of the storage pool area. The supply air enters the storage pool area at 70 °F and is distributed throughout the area. Approximately 240 ft^3/min of ventilation air is distributed under the cover blocks of the pool cells via a 24-in.-dia. duct to the K-1 filter building.

296-B-13 Stack (221-BF Exhaust System)--The underground 221-BF Building, which houses BCP batch collection tanks for B Plant process condensate liquid effluent discharges, is exhausted via the 296-B-13 Stack. This is a 1000-ft^3/min-capacity system treated by two HEPA filters in series. Electric duct heaters are installed for filter protection from moisture. This system provides ventilation and monitoring for the sample room. Figure 2-16 is a schematic of the 296-B-13 system.

296-B-14 Stack--In the past, the offgases from the 221-B Building process cells collected by the No. 2 Vessel Ventilation System (VVS#2) were discharged below grade to the 24-in.-dia. cooling water header. The discharge stack is designated as 296-B-14 (Figure 2-17). The VVS#2 system is currently not operating and has been down since November 1990. Vessels that use to be serviced by the VVS#2 are currently vented through VVS#1. For proposed future operation, a system upgrade has been designed to conform the VVS#2 sampling and monitoring system to be consistent with the other four B Plant/WESF stack cabinet layouts.

The VVS#2 system was originally designed to vent, scrub, and filter gases from process vessels in which ammonia was potentially present to prevent ammonia nitrate build-up on the filters; however, no ammonia sources are currently present in the plant. Some vessels vented to the main vent header 146 via two other headers-69-A and 69-B-while others vented directly to header 146. The gases collected through header 146 to Cell 22 were then processed through an ammonia scrubber, a heater to reduce the relative humidity of the vapor stream, a glass-fiber prefilter, and a bank of two-stage HEPA filters. Then the air flows to an outside filter pit on the south side of the 221-B Building. The pit contains a bank of two-stage HEPAs and a jet that provides the motive force for the stream. The air is continuously monitored

Figure 2-15. K-3 Exhaust System. Located Upstream of the 296-B-10 (WESF) Stack.

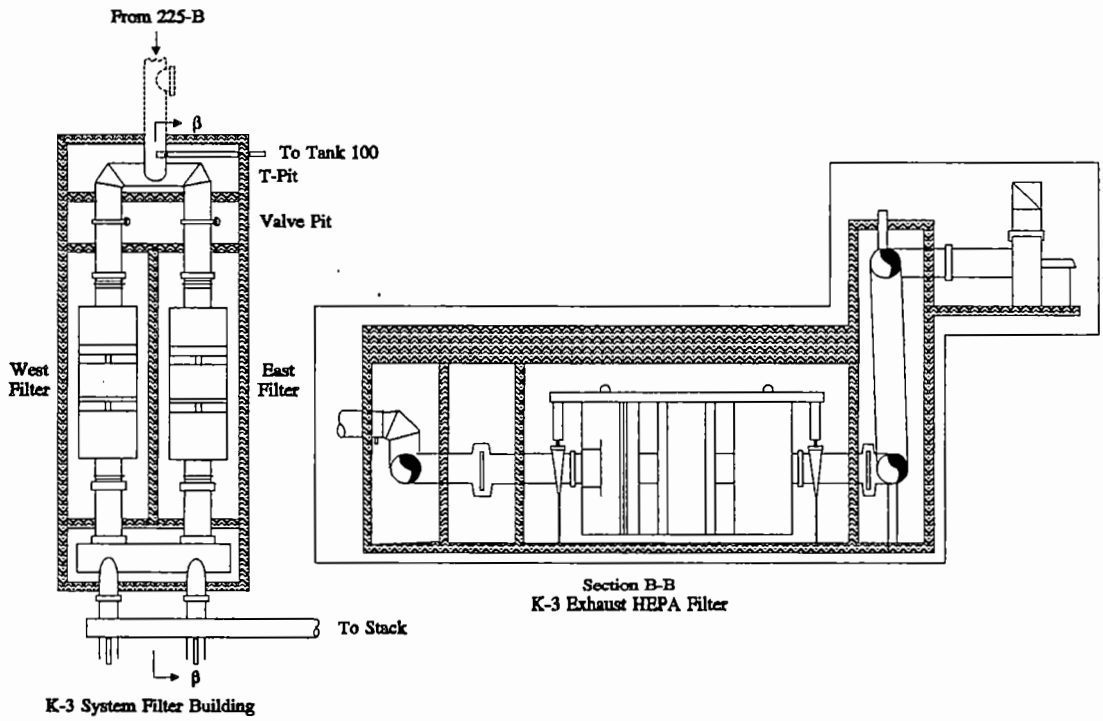

Figure 2-16. 296-B-13 Stack Schematic.

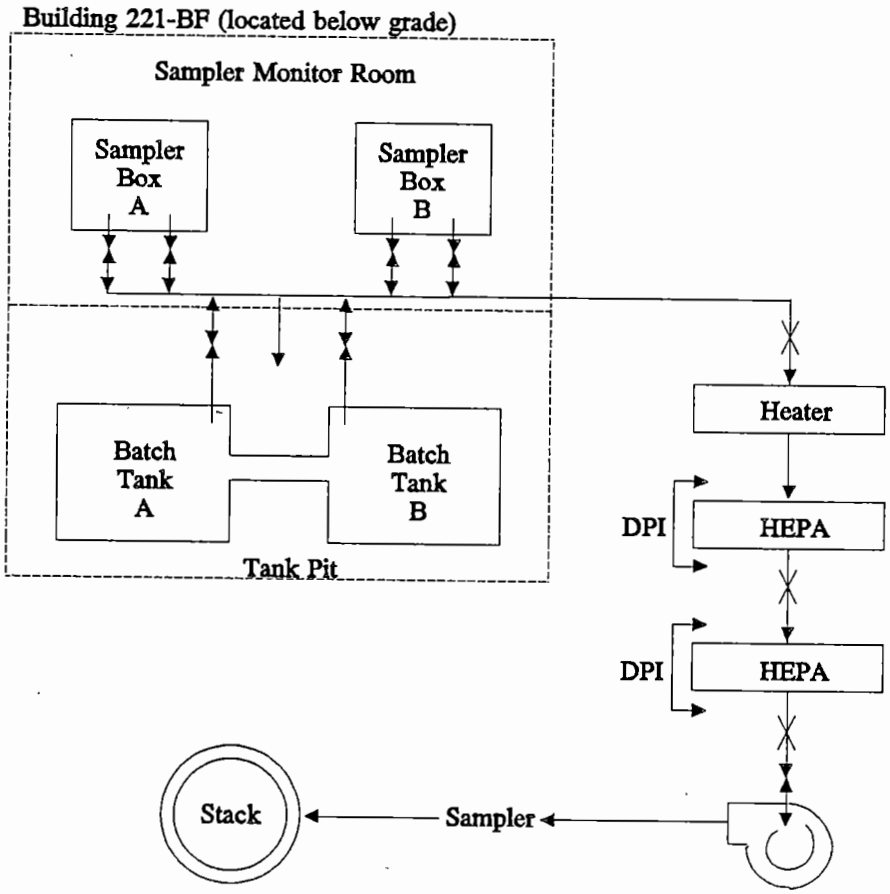

Figure 2-17. 296-B-14 Gaseous Effluent Flowsheet.

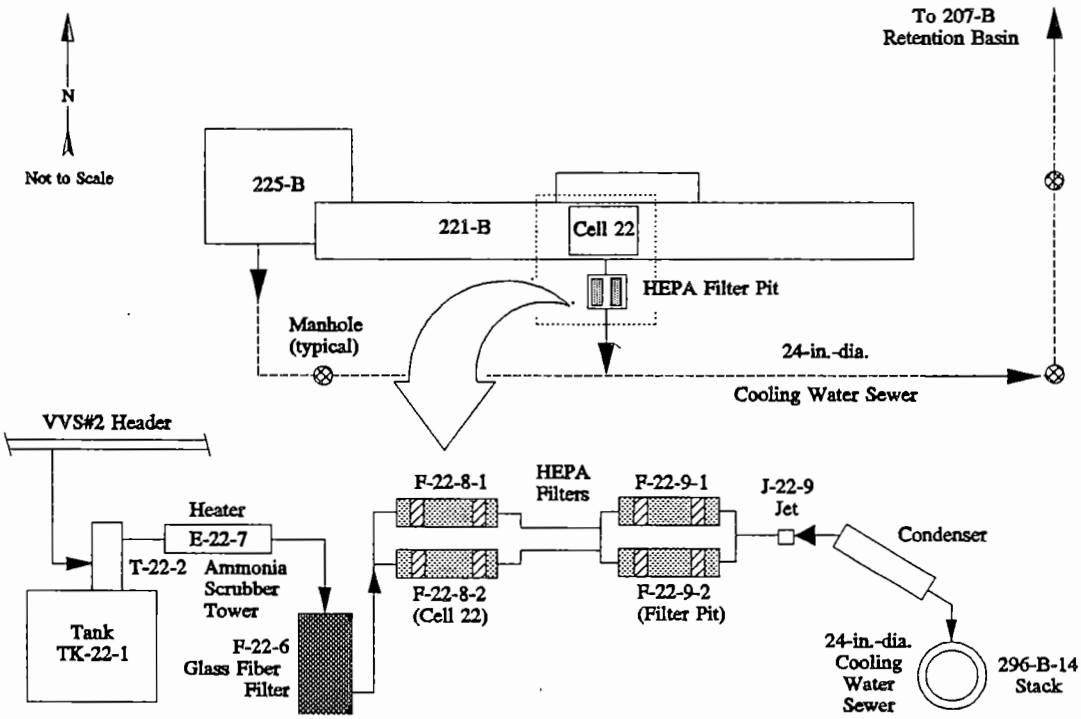

from a tie-in near the outlet of these filters and finally discharges into the 24-in.-dia. cooling water header. The airborne effluent mixes with the cooling water before final disposal to the 216-B-3 Pond via the 207-B Retention Basin.

2.2.2.2 Gallery Exhausters. The 221-B Building operating, pipe, and electrical galleries are ventilated by supply and exhaust fans (EF). Exhaust air is discharged to the atmosphere through prefilters and single-stage HEPA filters, located at seven fan stations designated 296-B-21 through 296-B-27-EF#1 through EF#7, respectively (see table below and Figure 2-18). Total capacity of the seven exhaust systems is approximately 8,000 to 16,000 ft^3/min per EF, although all exhausters are not continuously operated.

The exhaust fans are manually started at the FPMCS OIU. When the fans are operating, gallery exhaust air is drawn through prefilter and HEPA filter banks and discharged to the atmosphere through the fan outlet.

Control of each system is performed manually. Air flow rate of each fan (except EF#4) is controlled by adjusting the fan vaned inlet damper or volume damper to maintain a positive static pressure in the pipe gallery with respect to the 221-B canyon and negative with respect to the 271-B Building office and shop areas.

Each of the seven exhausters serves one or two stages of prefilters, which are in series with HEPA filters. The filters are accessible from the pipe and operating galleries. A DF of at least 2×10^3 would be expected under all conditions of normal operation of these systems (RHO 1986).

The exhaust points are not required to be sampled or monitored since these effluents are not considered to have a potential to exceed 10% of any DCG as defined in DOE Order 5400.5 (DOE 1990b). Ambient air in the galleries, however, is routinely sampled and monitored at multiple points by continuous air monitoring (CAM) units (Aldrich 1991).

2.2.2.3 Waste Encapsulation Storage Facility Emergency Jet. The K-3 HVAC system has an emergency steam jet (296-B-12) to provide vacuum for the system in case of exhaust fan failure. The K-3 emergency exhaust jet activates when the K-3 exhaust duct pressure becomes less negative than -5.5 in. H^2O.

Overall ventilation control is maintained by control of the pressure in the K3 exhaust duct. Louvers on the exhaust fan are controlled to keep a constant pressure of -7.5 in. of water column w.g. in the exhaust duct. If duct pressure rises above -5.0 w.g., then the emergency steam jet comes on, and the supply fan shuts down. The steam jet has a capacity of 1,000 ft^3/min and is located just upstream of the exhaust fans. Normal flow through the system is about 5,500 ft^3/min (RHO 1984).

The K-3 emergency steam jet has been tested numerous times under various processing conditions. This use has not significantly affected operation of other WESF components requiring steam from the building header. Emergency procedures require suspension of WESF operations when use of the K-3 steam jet is required (RHO 1985b).

2.2.2.4 Bulk Chemical Storage Tank Vents (211-B Area). Chemical Tank Farm 211-B is located north of the 221-B Building and contains bulk storage

Figure 2-18. 221-B Building Gallery Exhausters.

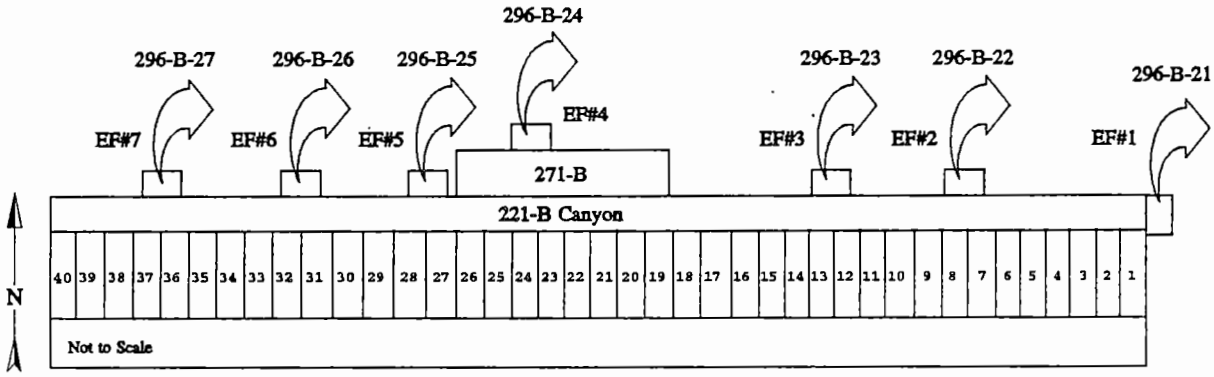

facilities for chemicals used in the waste fractionization processes. There is no potential for release of gaseous radioactive contamination to the environment through these vents.

2.2.2.5 Aqueous Makeup and Scale Tank Vents (271-B). The aqueous makeup (AMU) system includes the chemical storage tanks, mixing tanks, and scale tanks for measurement.

Most of the AMU is located on the third floor of the 271-B Building. Typical chemicals stored in this area include nitric acid, sodium hydroxide, sodium nitrite, sodium nitrate, and decontamination agents, such as 1,1,1 trichloromethane and citric acid. There is no potential for release of gaseous radioactive contamination to the environment through these vents.

2.3 IDENTIFICATION AND CHARACTERIZATION OF POTENTIAL SOURCE TERMS

This section provides information on identifying and characterizing all potential process source terms present in the facility.

2.3.1 Liquid Effluents

Potential source terms for B Plant/WESF liquid effluents are presented in the following sections.

2.3.1.1 BCS. This effluent results from heat addition processes required for B Plant operations. All steam input originates as steam supplied to the plant that has been circulated through some type of heat exchanger. The steam and condensate are separated by one physical barrier (i.e., a coil or tube sheet) from the process solutions being heated. A positive pressure differential is maintained from the steam to the process side of the heat exchanger such that component failure will result in flow toward the contaminated side of the barrier. The BCS effluent is considered to be a potentially contaminated liquid waste because of the potential for these protective design measures to fail. In the current configuration, steam supplied to the E-23-3 Concentrator constitutes the only source of BCS flow (WHC 1990h).

Typical process solutions can contain very high radionuclide concentrations. A worst-case BCS release scenario involves a steam coil failure followed by steam service interruption that allows the coil to depressurize and permits entry of process solution. If the coil is subsequently repressurized with steam, the contaminated coil volume (or some portion of it) could then be released in the BCS liquid stream. However, if this scenario were to happen, the monitor and detection capability in 221-BB would be adequate to reroute the stream back into the 221-B, if necessary.

The BCS stream is not normally expected to contain any contaminants other than those found in the source steam. This status was verified by a nonradiological pollutant screening program conducted in 1982 (RHO 1986). No potential exists for the release of nonradiological hazardous effluent without accompanying radiological indications.

2.3.1.2 BCP. The BCP stream is generated as the condensed overheads resulting from volume reduction from various liquid wastes and operation of

the low-level waste concentrator. The radionuclide concentrations introduced to the BCP are a complex function of the chemistry and activity of the concentration feed solutions; the decontamination factor achieved by the concentrator and its deentrainer; and the efficiency of the system condenser in separating the vaporized liquid contaminants from the concentrator offgas stream (WHC 1990g).

When the concentrator is operating, all other nonradiological constituents that might be of concern (i.e., heavy metals) are effectively concentrated in the concentrator bottoms. This has been confirmed by nonradiological pollutant screening of BCP samples for pH, cadmium, chromium, lead, silver, nitrate, alkalinity, conductivity, and total organic carbon (TOC) (RHO 1986).

2.3.1.3 B Plant Chemical Sewer. Chemicals such as HEDTA, EDTA, nitric acid, hydroxyacetic acid, and sodium hydroxide are stored in relatively large amounts and varying concentrations in tanks to support B Plant chemical processing (see Table 4.2). Routine inventory surveillance is conducted on these storage tanks. Smaller quantities of other liquids (i.e., 55-gal drums of sulfuric acid) are also stocked in BCE drainage areas.

The release of any hazardous chemicals is regulated (as defined in EPA and State of Washington regulations). Where appropriate, procedures may require nonhazardous waste substances to be neutralized before release. Release of hazardous waste is prohibited per criteria specified in EPA and state regulatory guidance (WAC-173-303) (WAC 1989, WHC 1990e).

2.3.1.4 CBC. This effluent results from heat removal processes required in B Plant operations. All CBC input originates as raw water supplied to the plant, which has been circulated through one or more components having some type of heat exchanger function. Typically, the cooling water is separated by one physical barrier (such as a coil or tube sheet) from the liquid or gaseous phase process solution that is being cooled. A positive pressure differential is maintained from the coolant to the process side of the heat exchanger, such that component failure will result in flow toward the contaminated side of the failed barrier. The CBC effluent is considered a potentially contaminated liquid waste because of the potential for these protective design measures to fail. Typical CBC effluent concentration values average about 1.6×10^7 μCi/mL. As an example, on November 7, 1963, a cooling coil leak in a B Plant vessel caused the release of approximately 30 Ci (primarily ^{144}Ce) through the CBC system (RHO 1986). Numerous modifications and improvements to containment have been made since this incident. It is mentioned here only for its value as a reflection of the magnitude of the source term. Worst-case contamination scenarios have been constructed for releases of this nature.

The CBC stream is not normally expected to contain any contaminants; therefore, this stream is not subjected to nonradiological liquid effluent sampling. Under upset conditions, both chemical and radiological contamination can occur. The measurement of the radiological contamination will provide both radiological and nonradiological release information when related to the source term concentrations (WHC 1990f).

2.3.1.5 B Plant Sanitary Sewers (2607-E3 and 2607-E4). Administrative controls (i.e., design separation, backflow prevention, posting of previously contaminated areas, and procedural precautions) are in place to ensure that

radiological contaminants are not inadvertently introduced into these sanitary waste disposal systems. Sinks and showers designated for decontamination are not interconnected with the other sanitary waste systems. The manner of sanitary waste disposal presents only hazards of type and magnitude routinely encountered by the public.

2.3.1.6 French Drains. On the basis that French drains do not come in contact with contaminated areas of the plant, they have been judged not to have a potential of exceeding 4% of the DCG on a yearly average and, therefore, do not require continuous monitoring or sampling.

2.3.2 Gaseous Effluents

Potential source terms for B Plant/WESF gaseous effluents is presented in the following sections.

2.3.2.1 B Plant/WESF Stacks. Following are discussions of source terms for the B Plant/WESF stacks.

291-B-1 Stack (221-B Canyon Ventilation Exhaust)--The canyon and process cells are normally contaminated as a result of past and ongoing process operations. Equipment failure, leakage of process solutions, and remote maintenance operations can contribute to the quantity of radioactive contaminants present in the canyon and cells. These contaminants are subject to dispersion in the ventilation air. The ventilation system function is to confine the release of these contaminants, thereby protecting both operating personnel and the environment.

A qualitative assessment characterized the source terms as follows (RHO 1986):

Source	Location
Mixed fission products in waste	Process cells and gaseous effluent filters
Concentrated ^{137}Cs and ^{90}Sr solutions	Storage vessels in process cells
Microcuries of mixed fission products	Waste water and condensate streams
Mixed fission products (none at this time)	Cask transfer facility
^{137}Cs and ^{90}Sr	Canyon ventilation exhaust filters

The actual extent of resuspension of radioactivity in ventilation air is a complex function of surface area, temperature differential, vapor pressure, and other parameters. Therefore, no attempt has been made here to quantitatively model the introduction of radionuclides into the ventilation systems.

The HEPA filtration reduces the concern about nonradiological emission of particulates, asbestos, and the accompanying visual opacities of the effluent. The plant has no sources of beryllium, sulfur dioxide, carbonyls, vinyl chloride, or mercury. Sources of nitrogen oxides constitute the only two nonradiological emissions of concern.

The source of nitrogen oxides is nitric acid used in the separations process. Most of the vessels containing this source are part of the VVS#1. Nitrogen oxides emission concentration is estimated to be less than 5 ppm (RHO 1986).

296-B-5 Stack (221-BB Exhaust System)--The 221-BB Building contains weir tanks and effluent instrumentation for the process condensate and steam condensate liquid effluents. The weir tank vault contains residual contamination from past operations of the BCS and BCP.

The source term is very low relative to the canyon and vessel ventilation systems previously described; however, smearable contamination is known to be present in 221-BB. Startup of neutralized current acid waste (NCAW) processing is not expected to appreciably change the source term from the current conditions; although other planned projects may affect the source term. In addition to the stack monitoring system, CAM units are installed inside the 221-BB Building to monitor the air within the condensate tanks room and the air within the instrument room.

No other source of concern relative to nonradiological contaminants has been identified in the analyses of these emissions.

296-B-10 Stack--The K-1 and K-3 exhaust systems are the major contributors to the 296-B-10 Stack. Of these two systems, the K-3 is considered to have a greater potential because of the larger source term that is present in the K-3 system. Therefore, the available source terms were calculated for the K-3 exhaust system. No other source terms are available.

Both cesium and strontium have been found in the K-3 exhaust duct area beneath, and near, G Cell. The K-3 duct area beneath G Cell potentially has 62% strontium and 38% cesium, while the area in the vicinity of the K-3 filter may have 85% cesium and 15% strontium.

Radionuclide concentrations have been calculated for the K-3 duct using dose rate data accumulated during K-3 duct contamination measurements. The dose rate varied from 59 to 205 $R/h/ft^2$. This translates to concentrations of 17 to 57 Ci/m^2 cesium or 640 to 2000 Ci/m^2 strontium (RHO 1985b).

The radionuclide inventories for the K-3 duct have been calculated using the data for the K-3 duct beneath G Cell, the inlet duct to the K-3 filter, 100% cesium, and 100% strontium. These inventories are presented in Table 2-2.

Table 2.2 Calculated Cesium and Strontium Inventories for K-3 Ventilation Duct.

Percentage of material	Inventory (Ci)
38% ^{137}Cesium, 62% ^{90}Strontium	36,200 - 136,000
85% ^{137}Cesium, 15% ^{90}Strontium	9,900 - 34,400
100% ^{137}Cesium	1,500 - 5,100
100% ^{90}Strontium	57,500 - 200,000

Source: RHO (1985b).

296-B-13 Stack (221-BF Exhaust System)--The source to the 221-BF Ventilation System is equivalent to that of 221-BB except that only the BCP (not the combined BCS/BCP) liquid effluent is involved. As in 221-BB, a portion of the underground building is accessible to personnel not wearing radiological protective clothing. As in 221-BB, there is a CAM unit in the sample room of the 221-BF Building. While the airborne source term associated with BCP liquid interface is low relative to process solution air-liquid interfaces, it should be recognized that the BCP is, radiologically speaking, potentially the most contaminated stream. This stream is, however, sampled prior to release to the environment. No other source of nonradiological contaminants has been demonstrated to exist in the analyses of these emissions.

296-B-14 Stack--Specific source terms for the 296-B-14 Stack are provided in Sections 2.2.2.1 and 4.2.2.1.

2.3.2.2 Gallery Exhausters. At least two physical barriers separate these areas from potential contamination. Therefore, as a result of an assessment performed by Radiological Engineering, this area is not considered to have a potential to exceed 10% of the DAC (Aldrich 1991).

Interfaces with process vessels and equipment in the canyon cells make the galleries subject to potential contamination via equipment failure, as well as blow-back or "suck-back" from process-related pressure transients. However, during routine operations, the contamination levels in these areas are minimal. Some areas of fixed contamination exist as a result of previous upsets, but these cannot provide a source term for contaminating the ventilation air.

Since these seven systems exhaust areas are routinely occupied by operational personnel, the nonradiological hazards of the areas are generally more limiting than environmental concerns. Occasional maintenance work on asbestos lagging occurs in the galleries. Any environmental release of this asbestos is mitigated by the use of greenhouses for isolation and HEPA filtration.

2.3.2.3 WESF Emergency Jet. Specific source terms for the WESF emergency jet are provided in Section 4.3.2.3. Potential source is the K-3 system. This jet is downstream of the K-3 filtration system. Its purpose is to maintain the required DPs in the WESF cells under emergency conditions.

2.3.2.4 Bulk Chemical Storage Tank Vents. Specific source terms for the bulk chemical storage tank vents are provided in Section 4.2.2.4.

2.3.2.5 AMU and Scale Tank Vents. Specific source terms for the AMU and scale tank vents are provided in Section 4.2.2.5.

3.0 APPLICABLE REGULATIONS AND STANDARDS

Regulations pertaining to effluent releases at Hanford have been developed by several regulatory agencies EPA, DOE, State of Washington [Washington Administrative Code (WAC)], and the Benton-Franklin-Walla Walla Counties Air Pollution Control Authority. Westinghouse Hanford, as a matter of policy, can maintain more restrictive requirements [as low as reasonably achievable (ALARA)-based] in the *Environmental Compliance Manual* (WHC 1988c) than those found in the regulations. Exceeding any documented *Environmental Compliance Manual* ALARA-based limit may not in itself violate a federal, state, or local regulation. The internal administrative requirements are intended to provide enough safety margin to be below any regulatory limit. In addition, any deviation or state of noncompliancy to the Westinghouse Hanford *Environmental Compliance Manual* is documented in a compliance plan in which corrective action is tracked until compliance is achieved. Table 3-1 gives a summary of the applicable regulations and standards applicable to this FEMP. Westinghouse Hanford is currently reviewing this FEMP for compliance to applicable regulations and comments will be incorporated into future revisions.

3.1 FACILITY EFFLUENT MONITORING PLAN REQUIREMENTS

Requirements for a FEMP are provided in DOE Order 5400.1, "General Environmental Protection Program" (DOE 1988a). The order provides specific information in Chapter IV on the requirements for effluent monitoring. A written environmental monitoring plan shall be prepared for each site, facility, or process that uses, generates, releases, or manages significant emissions or hazardous materials.

To ensure the health and safety of the public, radioactive effluents and nonradioactive emissions released at Hanford shall be monitored in accordance with the DOE 5400 series of orders and associated regulatory guides [i.e., DOE/EH-0173T (DOE 1991)]; 40 CFR Part 61 (EPA 1989c) and Parts 302-306 (EPA 1989a); and WAC 173-303 (WAC 1989). Information on the monitoring requirements for airborne or liquid effluent release pathways is presented according to whether the effluent is radioactive or nonradioactive hazardous material. Regulations pertaining to the monitoring and environmental surveillance requirements of effluents are typically based on the effluent release limits for those materials that are associated with their risk to the public. Monitoring requirements and associated limitations may also be based on best available technology (BAT) or other technology-based criteria.

Monitoring should be conducted in a manner that provides required measurements of the quantity and/or concentration of liquid and airborne constituents in effluents as a basis for (1) determining compliance with applicable discharge and effluent control limits, including self-imposed administrative limits designed to ensure compliance with in-plant operating limits, effluent standards or guides, and with environmental standards; (2) evaluating the adequacy and effectiveness of containment and waste treatment and control, as well as efforts toward achieving levels of radioactivity that are ALARA considering technical and economical constraints; and (3) compiling an annual inventory of the radioactive material released in effluents and onsite discharges.

Table 3-1. Applicable Regulations and Standards. (2 sheets)

Agency/Originator	Regulation No.	HA	HL	RA	RL	Summary/Application
U.S. Department of Energy, (DOE) Washington, D.C.	DOE Order 5400.1, 1988 General Environmental Protection Program	X	X	X	X	Outlines effluent monitoring requirements
	DOE Order 5400.5, 1990 Radiation Protection of the Public and Environment			X	X	Protects public/environment from radiation associated with DOE operations
	DOE Order 5480.4, 1989 Environmental Protection, Safety, and Health Protection Standards	X	X	X	X	Sets requirements for the application of the mandatory environmental protection, safety, and health (ES&H) standards; lists reference ES&H standards
	DOE Order 5484.1, 1981 Environmental Protection, Safety, and Health Protection Information Reporting Requirements	X	X	X	X	Sets requirements for reporting information having environmental protection, safety and health protection significance
	DOE Order 5820.2A, 1988 Radioactive Waste Management	X	X	X	X	Sets radioactive waste management requirements
U.S. Environmental Protection Agency, (EPA) Washington, D.C.	40 CFR 61, 1989 National Emission Standards for Hazardous Air Pollutants	X		X		Sets national emission standards for hazardous air pollutants (NESHAP)
	40 CFR 61, 1989 Subpart A General Provisions	X				Regulates hazardous pollutants
	40 CFR 61, 1989 Subpart H National Emission Standards for Emissions of Radionuclides other than Radon from Department of Energy Facilities			X		Sets emissions standards/monitoring requirements for radionuclides
	40 CFR 122, 1983 EPA Administered Permit Programs: The National Pollutant Discharge Elimination System		X			Governs release of nonradioactive liquids
	40 CFR 141.16, 1989 Safe Drinking Water Act (National Interim Primary Drinking Water Regulations)		X		X	Sets maximum contaminant levels in public water systems
EPA (cont'd)	40 CFR 191, 1985 Disposal of Spent Nuclear Fuel, High-Level and Transuranic Radioactive Wastes				X	Regulates radioactive waste disposal
	40 CFR 261, 1989 Identification and Listing of Hazardous Waste		X			Identifies and lists hazardous wastes
	40 CFR 302.4, 1980 Comprehensive Environmental Response, Compensation and Liability Act of 1980 (CERCLA): Designation, Reportable Quantities and Notification	X	X	X	X	Designates hazardous materials, reportable quantities, notification process

Table 3-1. Applicable Regulations and Standards. (2 sheets)

Agency/Originator	Regulation No.	HA	HL	RA	RL	Summary/Application
	40 CFR 355, 1987 Superfund Amendments and Reauthorization Act of 1986 (SARA): Emergency Planning and Notification	X	X			Identifies threshold planning quantities for extremely hazardous substances
American National Standards Institute, (ANSI) New York, New York	N 13.1 - 1969* Guidance to Sampling Airborne Radioactive Materials in Nuclear Facilities			X		Sets standards for effluent monitoring systems
	N 42.18*, 1974 Specification and Performance of On-site Instrumentation for Continuously Monitoring Radioactivity in Effluents			X	X	Recommendations for the selection of instrumentation for the monitoring of radioactive effluents
Washington State Department of Ecology, (Ecology) Olympia, Washington	WAC 173-216, 1989 State Waste Discharge Permit Program		X			Governs discharges to ground and surface waters
	WAC 173-220, 1988 National Pollutant Discharge Elimination System Permit		X		X	Governs wastewater discharges to navigable waterways; controls NPDES permit process
	WAC 173-240, 1990 Submission of Plans and Reports for Construction of Wastewater Facilities		X			Controls release of nonradioactive liquids
	WAC 173-303, 1989 Dangerous Waste Regulations		X			Regulates dangerous wastes; prohibits direct release to soil columns
	WAC 173-400, 1976 General Regulations for Air Pollution Sources	X				Sets emissions standards for hazardous air pollutants
Benton-Franklin Walla-Walla Counties Air Pollution Control Authority, (APCA) Richland, Washington	General Regulation 80-7, 1980	X				Regulates air quality

HA = hazardous airborne.
HL = hazardous liquid.
RA = radioactive airborne.
RL = radioactive liquid.
*Refers to standards that are referenced in the DOE and EPA regulations.

Effluents should be monitored at the point at which the applicable standards apply. For example, onsite discharges may be monitored at the waste treatment and disposal system; effluents may be monitored at the point after all treatment and control, including retention and decay. In many cases, the monitoring location is specified in the discharge or operating permit.

Environmental monitoring requirements differ between new and existing facilities. For a new facility with the potential for adverse impact on the environment, an environmental survey must be conducted prior to actual start-up. The survey shall establish background levels of radioactive and toxic contaminants, characterize pertinent environmental and ecological parameters, and identify potential pathways for exposure to the environment as a basis for determining the effluent and environmental monitoring program. For existing facilities, subsequent surveys and continued monitoring are required based on the operation and inventory at risk.

3.2 HAZARDOUS MATERIAL

The EPA regulations pertaining to the release of hazardous substances from DOE facilities are presented in 40 CFR 302, "Designation, Reportable Quantities, and Notification" (EPA 1988). This regulation, in accordance with Sections 101(14) and 102(a) of the Comprehensive Environmental Response, Compensation and Liability Act of 1980 (CERCLA), defines hazardous substances, identifies reportable quantities of those substances, and sets forth the notification requirements for releases of those substances. This regulation also sets forth reportable quantities for hazardous substances designated under Section 311(b)(2)(A) of the *Clear Water Act of 1977* (CWA). Any credible or potential upset condition, identified in the FEMP determination, shall evaluate the risk to the environment using the CERCLA values (reportable quantities) as a basis for determining monitoring and/or sampling. The actions necessary to be in compliance with the above requirements shall be stated in the FEMP.

3.3 AIRBORNE EFFLUENTS

Airborne emissions of radioactive materials from DOE-controlled facilities at Hanford are subject to 40 CFR Part 61, "National Emissions Standards for Hazardous Air Pollutants" (EPA 1989c), as stated in DOE Order 5400.5, "Radiation Protection of the Public and the Environment" (DOE 1990b), and DOE Order 5400.1, Chapter IV, "Environmental Monitoring Requirements" (DOE 1988a). The list of hazardous air contaminants regulated under NESHAPs is provided in Subpart A, "General Provisions." The specific emissions standards and monitoring requirements for radionuclides are contained in Subpart H, "National Emission Standards for Emissions of Radionuclides Other Than Radon From Department of Energy Facilities."

Subpart H presents detailed requirements for emissions monitoring and test procedures (61.93), compliance and reporting (61.94), recordkeeping requirements (61.95), and exemptions from the reporting and testing requirements of 40 CFR Part 61.10 (61.97). Radionuclide emission rates from stacks and vents must be measured at all release points that have the potential to discharge radionuclides into the air in quantities that could

cause an EDE in excess of 1% of the NESHAPs 10 mrem/yr standard. The potential to discharge radionuclides must be based on the discharge from the effluent stream that would result if all pollution control equipment did not exist but facility operation(s) was otherwise normal. Furthermore, all radionuclides that could contribute greater than 10% of the potential EDE for each release point must be measured. For release points that have a potential to release radionuclides into the air but have effluents below the continuous monitoring standard, periodic confirmatory measurements must be made to verify low emissions. With prior EPA approval, alternative methods to the one described, including process knowledge, can be substituted for measurement to determine the emission levels of individual radionuclides.

WHC-CM-7-5, Part D, "Radioactive Airborne Emissions" (WHC 1988c), establishes requirements and guidelines governing airborne emissions of radioactive effluents. The maximum permissible emissions are termed administrative control values (ACV) and represent Westinghouse Hanford's evaluation of ALARA goals using currently available reliable effluent treatment technology. The ACVs are fractions or multiples of the DCGs of DOE Order 5400.5 and are meant to assure that the DOE DCGs are not exceeded at the site boundary and that airborne emissions are below the required levels for compliance with all applicable federal, state, and local authority radionuclide emission limits.

In the State of Washington, airborne effluents are regulated by the *Washington Clean Air Act of 1967*. General regulations for air pollution sources are presented in WAC 173-400 (WAC 1976), including emission standards for sources emitting hazardous air contaminants in WAC 173-400-075.

WHC-CM-7-5, Part C, "Nonradioactive Airborne Effluents" (WHC 1988c) establishes the standards governing airborne emissions of nonradioactive contaminants from all existing and planned Westinghouse Hanford facilities.

3.4 LIQUID EFFLUENTS

DOE Order 5400.5, Chapter II, Page 5, presents the requirements limiting the exposure of the public to radioactive materials from DOE-controlled facilities through the drinking water pathway. Although the radiological criteria of the public community drinking water standards of 40 CFR Part 141, *Safe Drinking Water Act* "National Interim Primary Drinking Water Regulations" *(EPA 1989d)*, are not applicable to DOE-operated drinking water systems, it is the policy of DOE to provide an equivalent level of protection for all persons consuming the water from a drinking water supply operated by, or for, the DOE. These systems shall not cause any person consuming the water to receive an EDE greater than 4 mrem in a year, excluding naturally-occurring radionuclides. The maximum contaminant levels in public water systems are found in 40 CFR 141, Sections 15 and 16.

Liquid effluents from DOE-controlled facilities that have the potential for radioactive contamination must be monitored in accordance with the requirements of DOE Orders 5400.1, and 5400.5. Facility operators must provide monitoring of liquid waste streams adequate to: (1) demonstrate compliance with the applicable requirements of DOE 5400.5, Chapter II; (2) quantify radionuclides released from each discharge point; and

(3) alert affected process supervisors of upsets in processes and emissions controls. Specific requirements and performance standards for continuous liquid effluent monitoring and sampling are also provided in the DOE 5400 series of orders.

Depending where a liquid effluent is discharged, certain regulations apply. These regulations are implemented through issuance of permits by federal, state, and/or local agencies. It is the responsibility of the facility, through RL, to apply for the permit appropriate to the effluent being discharged. Prior to applying for any permits, the applicant must know the sources of its liquid discharges and where the liquid effluent is being discharged. The following regulations apply based on where the liquid effluent is discharged:

- Wastewater discharged to a Publicly Owned Treatment Works (POTW) is subject to federal regulations found in 40 CFR Parts 403 to 471 (EPA 1990b) and may also be subject to local regulations and limitations. Permits for such discharges are obtained from the local sewerage agency into which the effluent is discharged, or in some cases, from the state.

- Wastewater discharged into a navigable waterway is subject to State of Washington regulations WAC 173-220 (WAC 1988) under the National Pollution Discharge Elimination System (NPDES). The state issues NPDES permits for such discharges.

Each type of discharge permit identified above will typically contain discharge limitations and monitoring requirements. However, the limitations and monitoring requirements will vary depending on the source and type of wastewater being discharged. In addition to EPA requirements, the state and local sewerage agencies may impose additional limitations, monitoring, and reporting requirements.

The WHC-CM-7-5, Part F, "Radioactive Liquid" (WHC 1988c), defines standards for the operation of Westinghouse Hanford facilities that generate and/or discharge radioactive liquid wastes. These standards are intended to assure that Westinghouse Hanford facilities are designed, constructed, and operated in a manner that protects the safety of the employees and the general public, minimizes spills and releases to the environment, and complies to applicable DOE, federal, state, and local regulatory requirements. The limits defined in this part are either multiples or fractions of DCG levels provided in DOE Order 5400.1. Liquid effluents that are less than threshold limits as defined in F4.0.a of WHC-CM-7-5, *Environmental Compliance Manual (WHC 1988c)*, are considered nonregulated with regard to radioactivity. The limit of 4% of the DOE DCGs that is used for a number of effluent control limits is essentially equivalent to drinking water standards in 40 CFR 141 (EPA 1989d).

The WHC-CM-7-5, Part E, "Nonradioactive Liquid Discharges," establishes Westinghouse Hanford requirements and guidelines for nonradioactive liquid effluent disposal. The requirements in this section apply to all nonradioactive liquid effluent streams discharged to the environment. No requirement in this part shall supersede implementation of a Spill Prevention Control and Countermeasures Plan (SPCC) or response procedure. Applicable discharges include: (1) discharges to the Columbia River, (2) discharges to

sanitary sewers, (3) surface discharges (e.g., ponds, ditches), and (4) subsurface discharges (e.g., cribs, underground injection wells, french drains). Facilities operated by other contractors that discharge to Westinghouse Hanford's liquid waste disposal sites shall comply with the provisions of this part.

3.5 HAZARDOUS MIXED WASTES

There are currently no regulations pertaining to "mixed waste" in effluents. Radioactive and dangerous/extremely hazardous contaminants in effluent streams are handled as individual components in effluent regulations and in effluent monitoring. Policies on mixed waste are presented in Section J of the *Environmental Compliance Manual*.

This page intentionally left blank.

4.0 IDENTIFICATION AND CHARACTERIZATION OF EFFLUENT STREAMS

This section provides information on the identification and characterization of effluent streams for normal and upset conditions.

4.1 IDENTIFICATION AND CHARACTERIZATION OF SOURCE TERMS CONTRIBUTING TO EACH EFFLUENT STREAM

4.1.1 Liquid Effluents

Identification and characterization of contributors to each liquid effluent stream is presented in the following.

4.1.1.1 B Plant Steam Condensate. Current contributor streams to the BCS include only steam condensate from the E-23-3 Concentrator (see Figure 4-1). Currently, the 114 header is isolated from the BCS system, and condensate in the header is routed back into the plant. Contributors to the 114 header include steam condensate from VVS#1 and VVS#2 heaters and cooling coil discharge from tanks TK-28-4, TK-31-1, and TK-31-3. Consequently, only steam condensate from the E-23-3 Concentrator discharges to the BCS system. BCS flow can be discontinued by shutting down the E-23-3 Concentrator. The 114 header discharge will remain diverted to TK-24-1, which is the feed tank for the BCP system, until the header can be flushed to bring the contamination levels below the ACLs and/or chemical release limits for the BCS stream. Discharge of the BCS stream is to the 216-B-55 underground crib.

4.1.1.2 B Plant Process Condensate. Contributors to the BCP stream condensate produced during the E-23-3 Low-Level Waste Concentration System could include low-level waste from decontamination work and water wash downs in the service, operating, and processing sections of the 221-B Building; steam condensate generated from ventilation units in the 221-B Building; normal steam condensate from the VVS#1 steam jet system; and the water from the process cells serviced by the VVS#2 exhaust, which is collected in Tank TK-22-1 (see Figure 4-2).

In addition, steam condensate from the VVS#1 and VVS#2 system heaters for the 221-B Building is routed to TK-24-1 via header 114 for processing through the low-level waste concentrator. Steam and raw water from various process vessel cooling-heating coils, where the potential for leakage of process solution into the coils is high, are also routed to TK-24-1 through header 114. When the feeds are received in TK-24-1, technical grade sodium hydroxide (NaOH) is added as a process chemical to adjust the solution pH to greater than 9.5. This is the only significant routine process chemical addition to the BCP feed stream. The liquid process condensate leaving the E-23-4 condenser is alternately gravity drained into one of two 13,000-gal holding tanks TK-A and TK-B located in the underground 221-BF Building via the 600-gal BCP receiver/weir tank in the 221-BB Building. Discharge of the BCP stream is to the 216-B-62 underground crib.

4.1.1.3 B Plant Chemical Sewer. The major contributors to the BCE are the 2902-B High Tank (potable sanitary water), cooling water from the B Plant and

Figure 4-1. B Plant Steam Condensate 221-BB Building Sampling/Monitoring System.

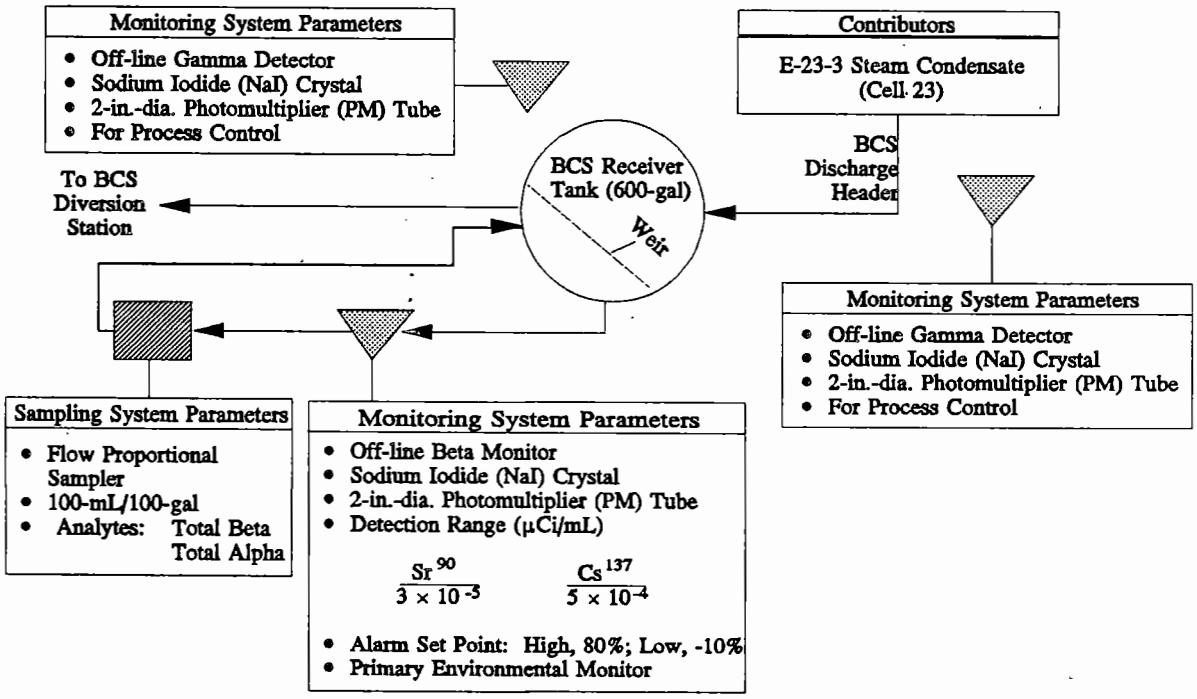

Figure 4-2. Contributors to B Plant Process Condensate Header Monitoring System.

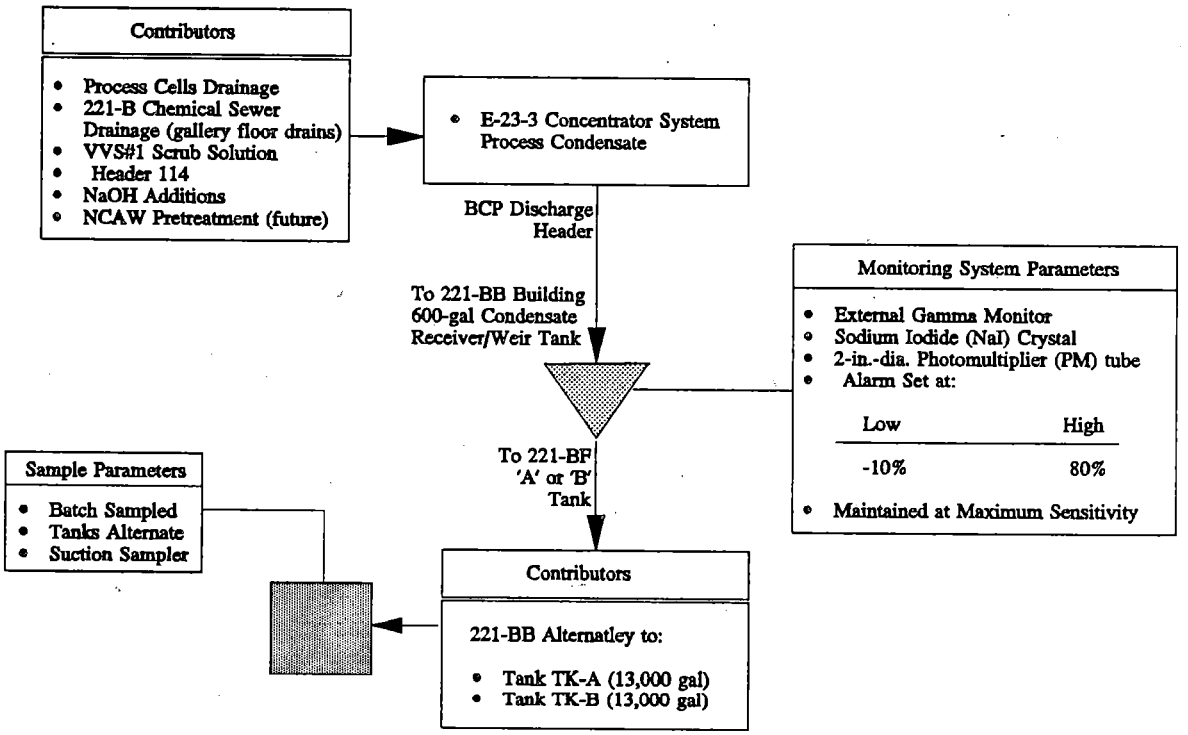

WESF air-compressor aftercoolers, some of the 221-B steam condensate, and the 217-B demineralized effluent (see Figures 4-3 and 4-4). The chemical sewer could also receive contributions from chemical makeup tank overflow systems (sodium hydroxide and sodium nitrate), air conditioning units, and space heaters (steam radiators).

Several potential contributors to the BCE stream can include the 217-B Building Demineralizer Unit floor drains, 221-B/271-B chemical wastes and floor drains, the 276-B Building floor and vessel overflow drains, WESF AMU floor and vessel overflow drains, 225-BC Building compressor cooling water and steam condensate, WESF steam condensate, 212-B Building Cask Station drains, 222-B Building HVAC system, and 224-B Building HVAC system and floor drains. Administrative controls are, however, in place to preclude the introduction of these areas into the BCE stream. Discharge of the BCE stream is to the 216-B-63 open ditch.

4.1.1.4 **CBC.** The B Plant cooling water is discharged into two separate headers: a 24-in.-dia. and a 15-in.-dia. (see Figure 4-5). These cooling water lines flow eastward from B Plant, then north, and combine into a common 24-in.-dia. line just north of the 216-B-59 Retention Basin. This single line-designated as the CBC stream-continues northward and discharges first into the 207-B Retention Basin, then on to the 216-B-3 Pond via the 216-B-2-3 and 216-B-3-3 Ditches. Based on monthly total volumes, the average flowrate of the CBC is approximately 1,700 gal/min.

The 24-in.-dia. Cooling Water Header--Feed for this stream includes several processing condensers, VVS#2 steam condensate, effluent from the 212-Cask Station, raw water from the testing of the emergency well pumps, and all cooling water from the WESF pool cell heat exchangers (see Figure 4-6). These potential contributing sources maintain positive pressure differential between the coolant and process solution to minimize the potential for contamination of the coolant through any leaks. The WESF contributes about 1,000 to 1,200 gal/min to the 24-in.-dia. header.

Potential sources that can feed the 24-in.-dia. header include the following:

- **The 221-B Building**
  - E-20-3 Condenser (Cell 20)
  - E-22-4 Condenser (Cell 22)
  - E-23-4 Condenser (Cell 23)
  - B Plant steam condensate beta monitor condenser from the 221-BB Process and Steam Condensate Building
  - VVS#2 steam jet condensate and surface condenser located on the south side of the 221-B Building, near Cell 19.

Figure 4-3. B Plant Chemical Sewer 221-B Building Electrical Gallery Header Monitoring/Diversion System.

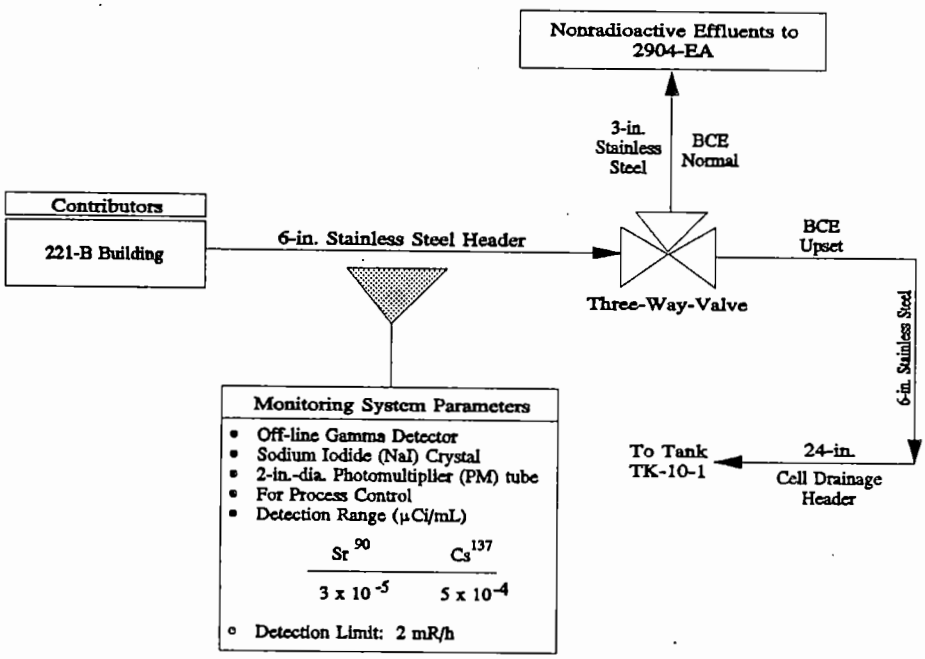

Figure 4-4. B Plant Chemical Sewer 2904-EA Building Monitoring System.

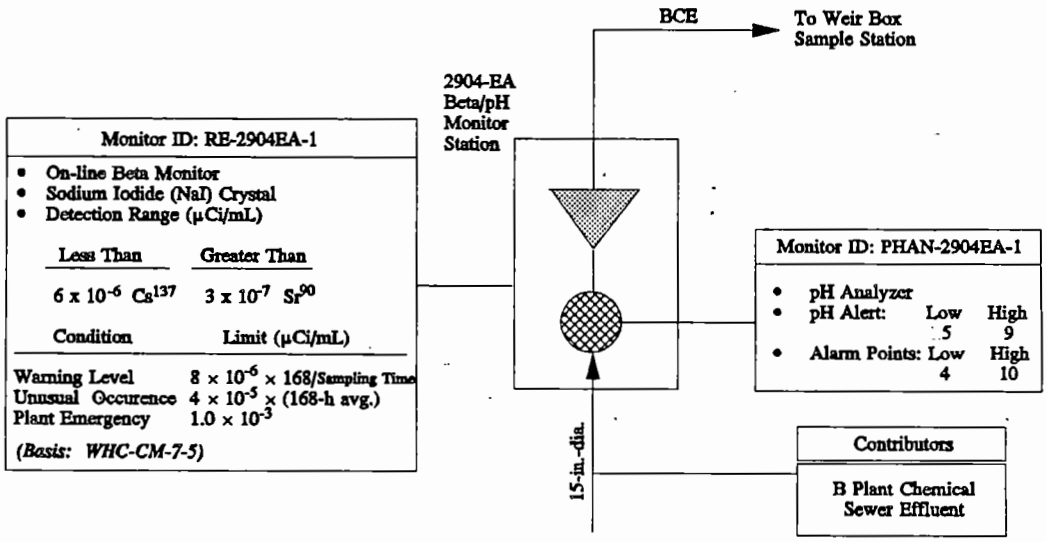

Figure 4-5. CBC 15-in. Monitoring System

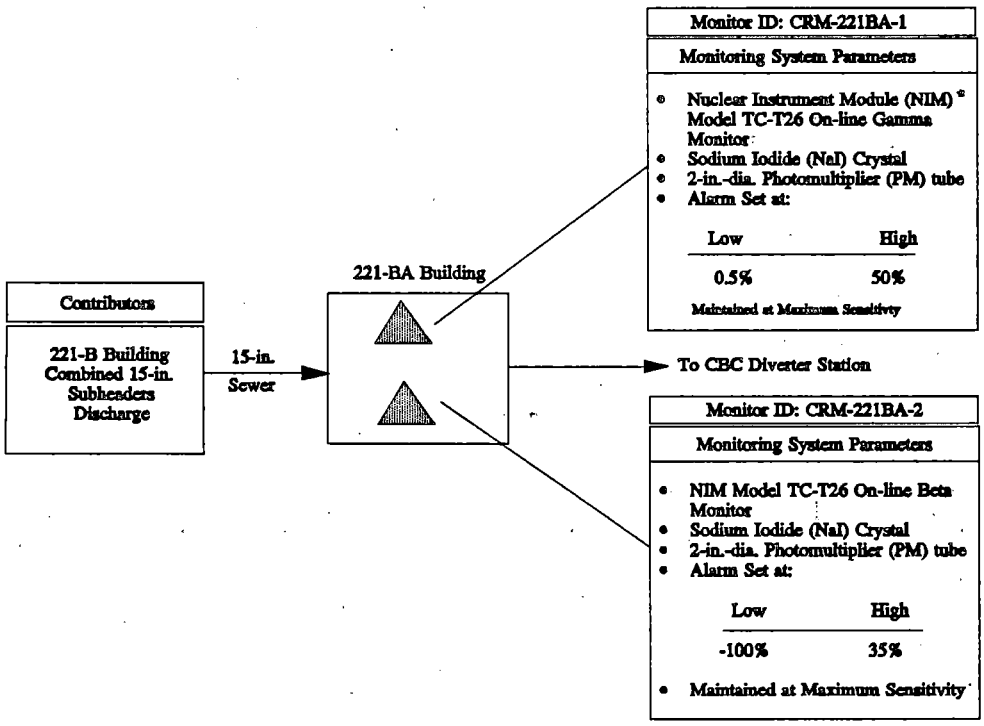

Figure 4-6. B Plant Cooling Water 24-in. Monitoring System.

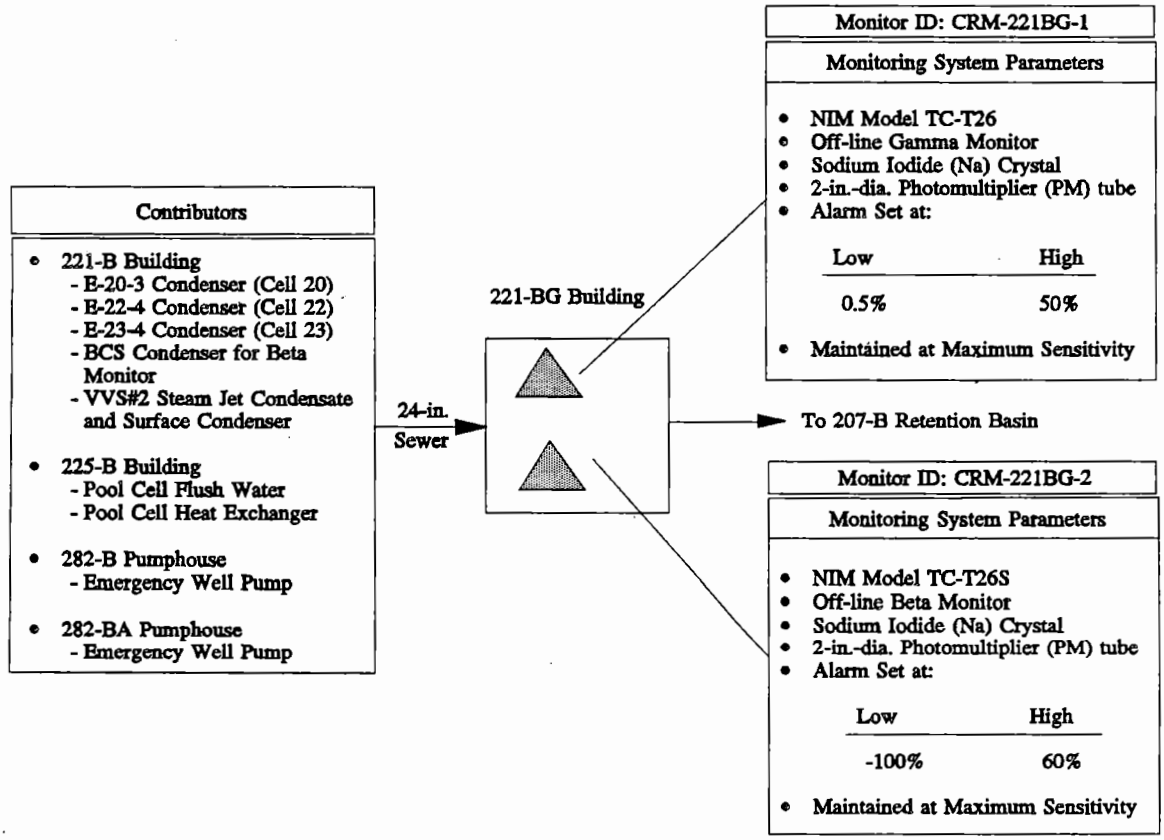

- **The WESF**
  - Pool cell flush water
  - Pool cell heat exchangers
- **The 212-B Cask Station**
- **The 282-B Pumphouse**
  - Emergency well pump
- **The 282-BA Pumphouse**
  - Emergency well pump

The 15-in.-dia. Cooling Water Header--The 15-in.-dia. cooling water line receives discharges from tank cooling coils considered to have a potential for possible contact with significant amounts of radioactive solutions should a leak occur. Differential pressures between the tank cooling coils and the tank solutions preclude inadvertent releases to the 15-in.-dia. discharge line. The radiological monitors and diversion-retention capabilities downstream of the process vessels provide the notification and controls necessary to prevent releases of hazardous or potentially hazardous materials to the environment.

Cooling water from the tank cooling coils enters the drain system via canyon cell wall nozzles. From the wall nozzles, the water enters a network of subheader lines, eventually combining to flow eastward through a 15-in.-dia. vitrified clay line.

Subheader number	Combined cell(s)
1	36 – 39
2	28 – 35
3	20 – 27
4	10 – 19
5	6 – 9
6	5

The 15-in.-dia. line receives cooling water via six main subheader lines. Five of these are collection system fed by individual subheaders; the sixth subheader (from Cell 5) discharges directly into a 14-in.-dia. pipe. The five subheader systems (identified in this document as 1 through 5, west to east) receive cooling water from groups of cells, as shown in Table 4-1.

Crossover lines, with valving, from the subheaders to the 24-in.-dia. line permit isolation and diversion capabilities, if required. The subheaders and 15-in.-dia. line operate in gutter flow by gravity.

4.1.1.5 Sanitary Sewers (2607-E3 and 2607-E4). Sanitary sewage from the 221-B Building is routed to an 8-in. VCP header from two 6-in. VCP sanitary sewers. The 8-in. header extends west of the 225-B Building, then heads south and then east between the 221-B Building and the 224-B and 222-B Buildings Sanitary sewage from the 224-B and 222-B Buildings is also routed to this sanitary sewer header.

A smaller septic tank-field system 2607-E-4 is located adjacent to, and east of, the 221-B Building. This sanitary sewer system was constructed to replace the abandoned 2607-E-4 system that was located northeast and adjacent to the 221-B Building. This subsurface disposal system collects sanitary sewage effluent from a 4-in.-dia. cast iron pipe that gravity flows to a 1,000-gal fiberglass septic tank. Liquid sewage flows to the 20-ft by 20-ft tile field where disposal is conducted by absorption.

4.1.1.6 French Drains. Discharges to French drains are not sampled nor recorded for flow. This is because these effluents are isolated from contaminated areas of the plant and therefore are judged not to have a potential of exceeding 4% of the DCG (DOE Order 5400.5) on a yearly average (see Section 2.2.1.6) (DOE 1990b).

4.1.2 Gaseous Effluents

Identification and characterization of contributors to each gaseous effluent stream is presented in the following.

4.1.2.1 B Plant/WESF Stacks. Following is information on B Plant/WESF stack contributors.

291-B-1 Stack--The B Plant main stack 291-B-1 handles the exhaust to the atmosphere of gaseous effluents from the 221-B Building main canyon and cells, VVS#1, 212-B Cask Station cell ventilation system, and the 224-B Building exhaust ventilation system (see Figure 4-7). With a flowrate of approximately 35,000 ft^3/min, the 291-B-1 main stack has the highest flowrate of all B Plant/WESF stacks.

296-B-5 Stack--The 296-B-5 Stack handles the exhaust to the atmosphere of the ventilation system for the 221-BB Building. The building contains weir tanks and effluent monitoring instrumentation for the liquid, process condensate (BCP), steam condensate (BCS), and gaseous effluents. The flowrate for the 296-B-5 Stack is approximately 1,200 ft^3/min.

296-B-10 Stack--The 296-B-10 Stack handles the exhaust to the atmosphere of filtered gaseous effluent released from WESF. The stack exhausts to the atmosphere gaseous effluents from the 225-B Building ventilation systems K-1, K-3, and K-4. The WESF main stack handles a flowrate of approximately 18,000 ft^3/min.

296-B-13 Stack--The 296-B-13 Stack exhausts the 221-BF Building, which houses BCP batch collection tanks for B Plant process condensate liquid effluent discharges. The stack exhausts filtered air from the Process Condensate Retention Ventilation system. The system has two HEPA filters in series and has a 1,000-ft^3/min capacity. The stack flowrate is approximately 600 ft^3/min.

Figure 4-7. B Plant main stack exhaust flowsheet.

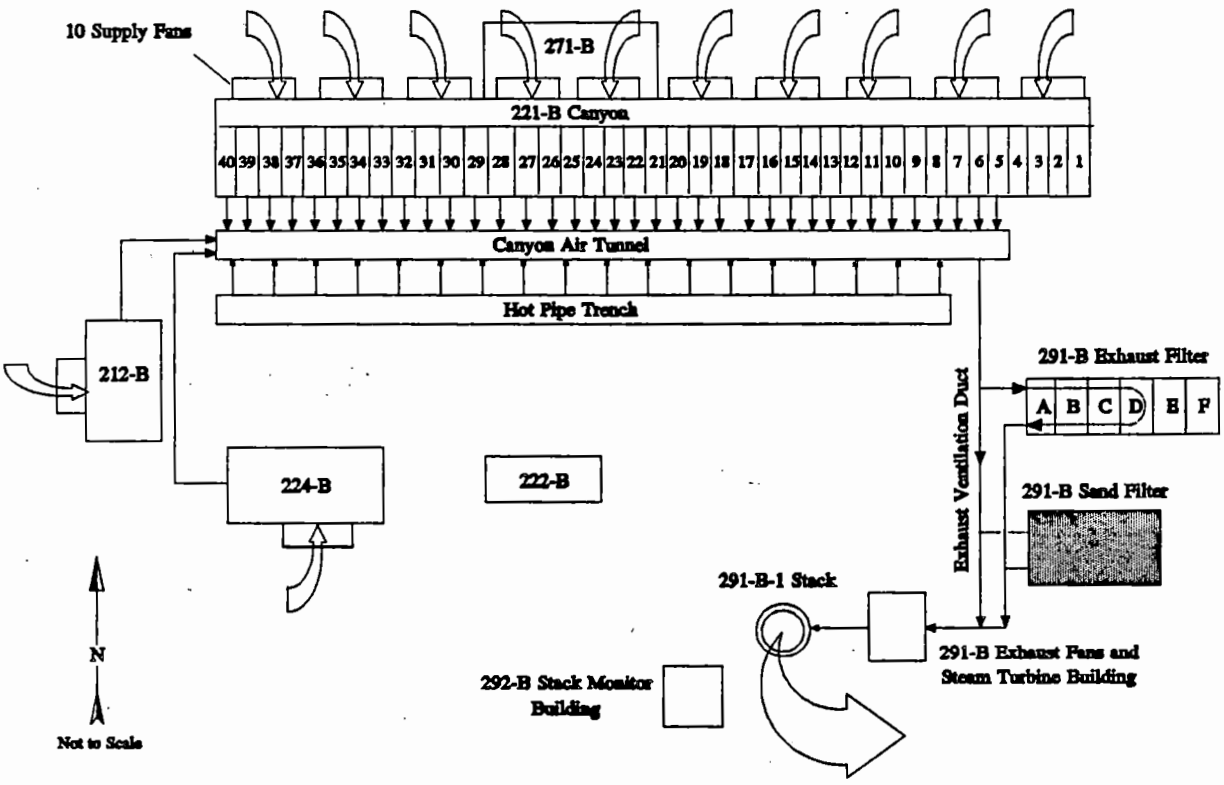

296-B-14 Stack--In the past, during normal processing operations, the 296-B-14 Stack handled the exhaust of the VVS#2 to the below grade 24-in.-dia. cooling water header at a flowrate of approximately 200 ft^3/min. Use of 296-B-14 Stack has been suspended since November 1990.

4.1.2.2 Gallery Exhausters (296-B-21 through 296-B-27). The interface with process vessels and equipment in the canyon cells make the galleries subject to potential contamination via equipment failure, as well as blow-back or "suck-back" from process-related pressure transients. As discussed in Section 2.2.2.2, some areas of fixed contamination exist as a result of previous upsets, but these cannot provide a source term for contaminating the ventilation air (RHO 1986).

4.1.2.3 WESF Emergency Jet 296-B-12. The WESF Emergency Jet is not used during routine processing operations.

4.1.2.4 211-B Tank Farm. Hazardous chemicals (i.e., nitric acid, hydroacetic acid, sodium hydroxide) and similar waste fractionization process chemicals are stored in carbon steel or stainless steel tanks (see Table 4-2). The anhydrous ammonia tank TK-SN-172 and ammonium carbonate tank TK-MNB-173 have been flushed clean and are to be excessed during 211-B Tank Farm upgrades. Three of the HEDTA 8,000-gal vertical stainless steel tanks are surrounded by a 3-ft concrete dike to provide secondary containment to minimize an environmental release. Additional secondary containment retention basins are to be added during Tank Farm upgrades.

4.1.2.5 AMU Tank Vents. The AMU system includes chemical storage tanks, mixing tanks, and scale tanks for measurement (see Table 4-2). Most of the AMU is located on the third floor of the 271-B Building. Typical chemicals include nitric acid, sodium hydroxide, sodium nitrite, and decontamination agents such as 1,1,1 trichloroethane and citric acid.

4.2 ROUTINE OPERATING CONDITIONS

4.2.1 Liquid Effluents

The barrier/control system for the CBC and BCS is the shell/tube sheet separating the shell side from the process side of the system, and the differential pressure between the two systems that would tend to result in the flow of water toward the contaminated process side of the system in case of a crack or break in the coil/tube sheet. Under normal operating conditions, the

Table 4-2. B Plant Waste Encapsulation Storage Facility Tank Details. (3 sheets)

Tank	Type	Capacity (gal)	Current use (last use)	Tank Status	Vent	Future use	Remarks
211-B Tank Farm							
TK-SA-101 TK-SA-102 TK-SA-103	Vert	8,000	57% Nitric acid	In use In use In use	Yes	57% Nitric	Retention basin will be added by W-0101H
TK-SF-120	Vert	8,000	50% Hydroyacetic acid	Empty	Yes	To be determined	Retention basin will be added by W-0101H
TK-SF-121 TK-SF-122	Vert	8,000	50% ANN	In use In use	Yes	None planned	To be emptied, cleaned, and put on stand-by; these tanks will not be upgraded by W-010H
TK-SE-125 TK-SE-126 TK-SE-127 TK-SE-128	Vert	8,000	38% EDTA 50% ANN 41% HEDTA 50% ANN	In use In use In use In use	Yes	None planned	To be emptied, cleaned, and put on stand-by; these tanks will not be upgraded by W-010H
TK-ST-131 TK-ST-132 TK-ST-133	Vert	8,000	41% HEDTA	Empty In use In use	Yes	None planned	To be emptied, cleaned, and put on stand-by; these tanks will not be upgraded by W-010H
TK-SD-111	Horz	18,000	Demin. water	In use	No	Demin. water	
TK-MNB-173	Horz	18,000	Ammonium carbonate	Empty	No	To be excessed	Flushed clean
TK-SQ-141 TK-SQ-142 TK-SQ-143	Horz	18,000	50% NaOH	In use In use In use	Yes	50% NaOH	Retention basin added by W-010H
TK-SK-161	Horz	11,500	Demin. reg. effluent	Empty	Yes	Spare or excessed	Flushed clean
TK-SN-172	Horz	12,200	Anhydrous ammonia	Empty	Yes	To be excessed	Flushed clean
TK-SB-191	Horz	24 ton	CO_2	Empty	Yes	To be excessed	Flushed clean
TK-SO-151 TK-SO-152							Removed in 1989
271-B AMU Tanks							
H-101	Makeup	1,000	Makeup demin/NaOH/ Na_2SO_3	Empty	Yes, open	No use planned	
TK-H-102	Makeup	2,500	Makeup demin/NaOH/ Na_2SO_3	Empty	Yes, open	No use planned	

Table 4-2. B Plant Waste Encapsulation Storage Facility Tank Details. (3 sheets)

Tank	Type	Capacity (gal)	Current use (last use)	Tank Status	Vent	Future use	Remarks
TK-H-301	Makeup	550	Chem. util.	Empty	Yes, open	No use planned	Must be upgraded before use
TK-H-301-1	Makeup	75	NaOH	Empty	Yes, open	No use planned	Must be upgraded before use
TK-H-301-1A	Makeup	100	?	Empty	Yes, open	No use planned	Must be upgraded before use
TK-H-302	Makeup	800	Chem. util.	Empty	Yes, open	No use planned	Must be upgraded before use
TK-H-303	Makeup	800	Chem. util.	Empty	Yes, open	No use planned	Must be upgraded before use
TK-H-304	Makeup	600	Chem. util.	Empty	Yes, open	No use planned	Must be upgraded before use
TK-H-305	Makeup	600	Chem. util.	Empty	Yes, open	No use planned	Must be upgraded before use
TK-H-306	Makeup	1,310	Not in use	Empty	Yes, open	No use planned	Must be upgraded before use
TK-H-307	Makeup	1,310	Not in use	Empty	Yes, open	No use planned	Must be upgraded before use
TK-H-309	Makeup	600	Nitric	Empty	Yes, open	Nitric	Environmental Upgrade W-004
TK-H-310	Makeup	600	NaOH	Empty	Yes, open	NaOH	Environmental Upgrade W-004
TK-H-311	Makeup	600	NaOH	Empty	Yes, open	NaOH	Environmental Upgrade W-004
TK-H-312	Makeup	600	Nitric	Empty	Yes, open	Nitric	Environmental Upgrade W-004
TK-H-313	Makeup	600	Chem. util.	Empty	Yes, open	Chem. util.	Environmental Upgrade W-004
TK-H-314	Makeup	600	Chem. util.	Empty	Yes, open	Chem. util.	Environmental Upgrade W-004
TK-H-315	Makeup	600	Chem. util.	Empty	Yes, open	Sodium nitrite	Environmental Upgrade W-004
TK-H-316	Makeup	600	Chem. util.	Empty	Yes, open	Sodium nitrite	Environmental Upgrade W-004
TK-H-317	Makeup	?	To fluidize resin for add.	Empty	Yes, open	Resin additives	Environmental Upgrade W-004
TK-H-318	Makeup	600	To cell chem. util.	Empty	Yes, open	No use planned	Must be upgraded before use

Table 4-2. B Plant Waste Encapsulation Storage Facility Tank Details. (3 sheets)

Tank	Type	Capacity (gal)	Current use (last use)	Tank Status	Vent	Future use	Remarks
TK-H-319	Makeup	600	To cell chem. util.	Empty	Yes, open	No use planned	Must be upgraded before use
TK-H-320	Makeup	75	To cell chem. util.	Empty	Yes, open	No use planned	Must be upgraded before use
TK-H-321	Makeup	1,600	To cell chem. util.	Empty	Yes, open	No use planned	Must be upgraded before use
TK-H-401	Makeup	550	To cell chem. util.	Empty	Yes, open	No use planned	Must be upgraded before use
TK-H-403	Makeup	100	To cell chem. util.	Empty	Yes, open	No use planned	Must be upgraded before use
TK-H-405	Makeup	100	To cell chem. util.	Empty	Yes, open	No use planned	Must be upgraded before use
TK-H-402	Makeup	550	To cell chem. util.	Empty	Yes, open	No use planned	Must be upgraded before use
TK-H-402-1	Makeup	30	To cell chem. util.	Empty	Yes, open	No use planned	Must be upgraded before use
TK-H-501	Makeup	140	To cell chem. util.	Empty	Yes, open	No use planned	Must be upgraded before use
TK-H-502	Makeup	140	To cell chem. util.	Empty	Yes, open	No use planned	Must be upgraded before use
TK-H-503	Makeup	140	To cell chem. util.	Empty	Yes, open	No use planned	Must be upgraded before use
221-B Operating Gallery Tanks							
TK-24A	Scale	400	Sodium hydroxide	Varies	Yes	Sodium hydroxide	Will be upgraded by W-010H
TK-25A	Scale	400	Sodium nitrite	Varies	Yes	Sodium nitrite	Will be upgraded by W-010H
All other scale tanks are currently not used.							

barrier/tube sheet is in place; and no process contamination can reach the shell side. However, upsets have occurred in the past; and contamination has entered the shell side of the system.

Due to the presence of floor drains in several of the B Plant buildings, the BCE has the potential to receive chemical contaminants. However, administrative controls are in place, and data have indicated that the BCE stream is within acceptable limits during routine operation.

Tables 4-3 through 4-6 provide percent decontamination levels determined based on actual data under routine operating conditions for the B Plant liquid effluents. The percent DFs are determined using the following terms:

- **Potential Contamination Amount (PA)** is defined as the amount of a constituent in the potential source term defined in Section 2.3, assuming no engineering controls are present.
- **Post-Control Discharge Amount (PC)** is defined as the amount of the contaminant present in the stream with engineering controls in place. This quantity is derived from actual analysis data for the stream.
- **Input Source Amount (SA)** is defined as the amount of the contaminant present before it enters the plant (e.g., for the CBC, the contaminants present in 200 East raw water are used as the SA).

The percent DF is calculated by subtracting the net contamination (PC-SA) from the potential contaminant amount (PA), dividing the result by the potential contaminant amount (PA), and multiplying by 100. Therefore, the following equation is utilized:

$$\textbf{Percent Decontamination} = \frac{\mathbf{PA - (PC - SA)}}{\mathbf{PA}} \times 100$$

Where: *PA = Potential contamination amount*
PC = Post-control discharge amount
SA = Input source amount

The result of this calculation provides a means of evaluating the effectiveness of the engineering controls present at the plant. As expected, decontamination levels approached or exceeded 100% since a physical barrier with a positive pressure differential is in place. As is often the case, a result exceeding 100% implies that the contaminant was coincidentally reduced while in the plant. This result can develop from overlap in analytical error for the post-control amount.

Additionally, when the input source amount or the post-control amount are similar in magnitude, the percent decontamination cannot be accurately determined. Therefore, the calculation was not determined in these instances. Specifics for each stream are shown in Tables 8-1 through 8-6. Supporting calculations for the decontamination calculations for liquid streams are provided in Appendix B.

Table 4-3. Calculated Decontamination Percentages Determined from Actual. Data for the B Plant Steam Condensate.

Analyte	Source		Potential Contamination		Post-control		Percent Decon[a,b,c]
	Concentration	Amount	Concentration	Amount	Concentration	Amount	
			Radionuclides				
	(µCi/mL)	(µCi)	(µCi/mL)	(µCi)	(µCi/mL)	(µCi)	
Gross alpha	8.85 E-10	1.82 E-03	3.60 E-09	7.39 E-03	3.02 E-09	6.20 E-03	ND
Gross beta	4.47 E-09	9.17 E-03	2.00 E-07	4.10 E-01	6.97 E-08	1.43 E-01	67.4
^{90}Sr	NA[d]	NA	2.00 E-07	4.11 E+07	NA	NA	NC
$^{239,240}Pu$	NA	NA	3.90 E-01	8.00 E+05	NA	NA	NC
^{137}Cs	NA	NA	8.53 E+03	1.75 E+10	NA	NA	NC
			Metals				
	(µg/L)	(µg)	(µg/L)	(µg)	(µg/L)	(µg)	
Pb	NA	NA	NA	NA	5.00 E+00	1.03 E+04	NC
Fe	6.36 E+01	1.30 E+05	8.93 E+00	1.83 E+04	8.41 E+01	1.73 E+05	ND
K	7.95 E+02	1.63 E+06	1.17 E+04	2.40 E+07	1.00 E+02	2.05 E+05	106
Na	2.26 E+03	4.64 E+06	3.68 E+05	7.55 E+08	1.87 E+02	3.84 E+05	101
			Other				
	(µg/L)	(µg)	(µg/L)	(µg)	(µg/L)	(µg)	
NO_3	9.96 E+02	2.04 E+06	1.80 E+06	3.69 E+09	9.17 E+02	1.88 E+06	100
SO_3	NA	NA	3.94 E+04	8.08 E+07	NA	NA	NC
CO_3	NA	NA	3.78 E+04	7.75 E+07	NA	NA	NC

[a]Figures based on 542-gal volume. For example, the gross alpha amount is calculated as follows, (8.85E-10 µCi/ml) x (3.785 E x 03 ml/gal) x (542 gal) = 1.82 E-03.
[b]NC = not calculated due to a combination of a lack of a post-control concentration, potential contaminant source, concentration, potential contaminant source concentration near the source concentration, or no source concentration.
[c]ND = not determined due to the potential contaminant amount not exceeding the input source amount by at least one order of magnitude.
[d]NA = not available.

Table 4-4. Calculated Decontamination Percentages Determined from Actual Data for the B Plant Cooling Water.

Analyte	Source		Potential Contamination		Post-control		Percent Decon[a,b,c]
	Concentration	Amount	Concentration	Amount	Concentration	Amount	
			Radionuclides				
	(µCi/mL)	(µCi)	(µCi/mL)	(µCi)	(µCi/mL)	(µCi)	
Gross alpha	8.85 E-10	3.01 E-04	7.92 E-09	2.70 E-03	6.80 E-09	2.32 E-03	ND
Gross beta	4.47 E-09	1.52 E-03	1.02 E-04	3.46 E-09	2.49 E-09	8.48 E-04	ND
^{90}Sr	8.94 E-10	3.05 E-04	2.03 E-05	6.92 E+00	1.82 E-10	6.20 E-05	100
$^{239,240}Pu$	6.90 E-10	2.35 E-04	1.40 E-09	4.77 E-04	2.37 E-12	8.07 E-07	ND
			Metals				
	(µg/L)	(µg)	(µg/L)	(µg)	(µg/L)	(µg)	
Pb	NA[d]	NA	5.26 E+04	1.79 E+07	5.50 E+00	1.87 E+03	100
Fe	6.36 E+01	2.17 E+04	9.70 E+04	3.30 E+07	3.50 E+01	1.19 E+04	100
K	7.95 E+02	2.71 E+05	4.76 E+06	1.62 E+09	7.41 E+02	2.52 E+05	100
Na	2.26 E+03	7.70 E+05	8.46 E+07	2.88 E+10	2.06 E+03	7.02 E+05	100
			Other				
	(µg/L)	(µg)	(µg/L)	(µg)	(µg/L)	(µg)	
NO_3	9.96 E+02	3.39 E+05	1.70 E+08	5.79 E+10	5.00 E+02	1.70 E+05	100
SO_3	1.60 E+04	5.45 E+06	1.46 E+07	4.97 E+09	1.03 E+04	3.51 E+06	100
CO_3	NA	NA	3.78 E+06	1.29 E+09	NA	NA	NC

[a]Figures based on 90-gal volume. For example, the gross alpha amount is calculated as follows, (4.45 E-10 µCi/ml) x (3.785 + E+03 ml/gal) x (90 gal) = 3.01 E-04 µCi.
[b]NC = not calculated due to a combination of a lack of a post-control concentration, potential contaminant source, concentration, potential contaminant source concentration near the source concentration, or no source concentration.
[c]ND = not determined due to the potential contaminant amount not exceeding the input source amount by at least one order of magnitude.
[d]NA = not available.

Table 4-5. Calculated Decontamination Percentages Determined from Actual Data for the B Plant Process Condensate.

Analyte	Source		Potential Contamination		Post-control		Percent Decon[a,b,c]
	Concentration	Amount	Concentration	Amount	Concentration	Amount	
Radionuclides							
	(µCi/mL)	(µCi)	(µCi/mL)	(µCi)	(µCi/mL)	(µCi)	
Gross alpha	8.85 E-10	2.01 E-03	4.01 E-05	1.69 E+03	3.27 E-09	7.43 E-03	100
Gross beta	4.47 E-09	1.02 E-02	8.52 E-01	2.69 E+07	2.43 E-05	5.52 E+01	100
^{90}Sr	NA[d]	NA	2.00 E-03	8.54 E+04	2.51 E-05	1.07 E+03	98.7
$^{239,240}Pu$	NA	NA	3.95 E-05	1.69 E+03	NA	NA	NC
^{137}Cs	NA	NA	8.50 E-01	2.69 E+07	2.96 E-06	9.35 E+01	100
Metals							
	(µg/L)	(µg)	(µg/L)	(µg)	(µg/L)	(µg)	
Pb	NA	NA	NA	NA	5.00 E+00	1.89 E+01	NC
Fe	6.36 E+01	2.71 E+06	8.94 E-01	3.82 E+04	4.75 E+01	2.03 E+06	ND
K	7.95 E+02	2.34 E+05	2.62 E+03	8.28 E+07	NA	NA	NC
Na	2.26 E+03	9.65 E+07	1.11 E+05	4.74 E+09	NA	NA	NC
Other							
	(µg/L)	(µg)	(µg/L)	(µg)	(µg/L)	(µg)	
NO_3	9.96 E+02	3.15 E+07	1.79 E+05	5.65 E+09	9.00 E+02	2.84 E+07	100
SO_3	NA	NA	3.94 E+03	1.68 E+08	NA	NA	NC
CO_3	NA	NA	3.78 E+03	1.61 E+08	NA	NA	NC

[a]NC = not calculated due to a combination of a lack of a post-control concentration, potential contaminant source, concentration, potential contaminant source concentration near the source concentration, or no source concentration.
[b]ND = not determined due to the potential contaminant amount not exceeding the input source amount by at least one order of magnitude.
[c]Values are for Operations Contractor laboratory.
[d]NA = not available.

Table 4-6. Calculated Decontamination Percentages Determined from Actual Data for the B Plant Chemical Sewer.

Analyte	Source		Potential Contamination		Post-control		Percent Decon[a,b,c]
	Concentration	Amount	Concentration	Amount	Concentration	Amount	
			Radionuclides				
	(µCi/mL)	(µCi)	(µCi/mL)	(µCi)	(µCi/mL)	(µCi)	
Gross alpha	8.85 E-10	3.68 E-03	1.01 E-06	4.22 E+00	5.55 E-10	2.31 E-03	100
Gross beta	4.47 E-09	1.86 E-02	1.01 E-07	4.22 E-01	2.18 E-09	9.08 E-03	102
^{90}Sr	NA[e]	NA	3.04 E-08	1.27 E-01	1.44 E-10	6.00 E-04	99.5
$^{239,240}Pu$	NA	NA	7.91 E-07	3.29 E+00	1.80 E-08	7.49 E-02	97.7
^{137}Cs	NA	NA	3.04 E-08	1.27 E-01	1.11 E-09	4.62 E-03	96.4
			Metals				
	(µg/L)	(µg)	(µg/L)	(µg)	(µg/L)	(µg)	
Fe	8.25 E+01	4.68 E+04	NA	NA	5.32 E+01	3.02 E+04	NC
K	4.00 E+01	2.27 E+04	7.26 E+07	1.51 E+10	8.01 E+02	2.67 E+06	100
Na	2.28 E+03	1.29 E+06	4.63 E+08	3.15 E+13	2.21 E+03	6.02 E+08	100
			Other				
	(µg/L)	(µg)	(µg/L)	(µg)	(µg/L)	(µg)	
NO_3	9.96 E+02	5.65 E+05	5.62 E+08	2.13 E+12	5.00 E+12	7.57 E+06	100
SO_4	1.68 E+04	9.54 E+06	1.15 E+09	2.39 E+11	1.11 E+04	3.70 E+07	100
Chloride	3.05 E+03	1.73 E+06	1.58 E+09	3.29 E+11	1.50 E+03	5.14 E+05	100

[a]Amounts are calculated on 1,100-gal volume for Tank 900. For example, the gross alpha amount is calculated as follows, (8.85 E-10 µCi/Ml) x (3.75 E + 03 ml/gal) x (1,100 gal) = 3.68 E-03 µCi.
[b]NC = not calculated due to a combination of a lack of a post-control concentration, potential contaminant source, concentration, potential contaminant source concentration near the source concentration, or no source concentration.
[c]ND = not determined due to the potential contaminant amount not exceeding the input source amount by at least one order of magnitude.
[d]Source concentration values are taken from Westinghouse Hanford (1990a) and are for raw water.
[e]NA = not available.

Identification and characterization of contributors to each liquid effluent stream during normal operating conditions is presented in the following.

4.2.1.1 BCS. The BCS effluent consists of steam supplied to B Plant that has been circulated through some type of heat exchanger. The steam and condensate are separated from the contaminated process solutions being heated by a physical barrier such as a coil or a tube sheet. A positive pressure differential is maintained from the steam to the process side of the heat exchanger so that component failure will result in flow toward the contaminated side of the barrier.

4.2.1.2 BCP. The BCP is produced from condensate produced during volume reduction of various liquid wastes during the E-23-3 Low-Level Waste Concentrator operation. Though not currently on-line, NCAW processing is included in this effluent evaluation.

4.2.1.3 CBC. This effluent results from heat removal processes required in B Plant operations. Virtually all CBC input originates as raw water supplied to the plant that has been circulated through one or more components having some type of heat exchanger function. Typically, the cooling water is separated by one physical barrier (such as a coil or tube sheet) from the liquid or gaseous process solution that is being cooled. A positive pressure differential is maintained from the coolant to the process side of the heat exchanger, such that component failure will result in flow toward the contaminated side of the failed barrier.

Treatment of the raw water at the 282-E Facility is performed annually with the addition of chlorine granules (HTH-calcium hypochloride) as a biological inhibitor. This chemical is added by 200 East Powerhouse personnel.

The 24-in.-dia. Cooling Water Header--The 24-in.-dia. cooling water header receives discharges from those processing vessels that are considered to have low potential for possible contact with radioactive solutions. That is, should one of these vessels leak, the effect to the environment would be minimal.

The 15-in.-dia. Cooling Water Header--The 15-in.-dia. cooling water header receives discharges from cooling coils on process tanks considered to have a potential for possible contact with more highly contaminated radioactive solutions should a leak occur (see Figure 4-8).

Combined B Plant Cooling Water--During normal operations, the contents of the 24-in. and 15-in. sewer lines are combined for disposal to the 216-B-3 Pond via the 207-B Retention Basin.

Figure 4-8. B Plant Cooling Water Contributors for the 15-in. Subheader Monitoring System.

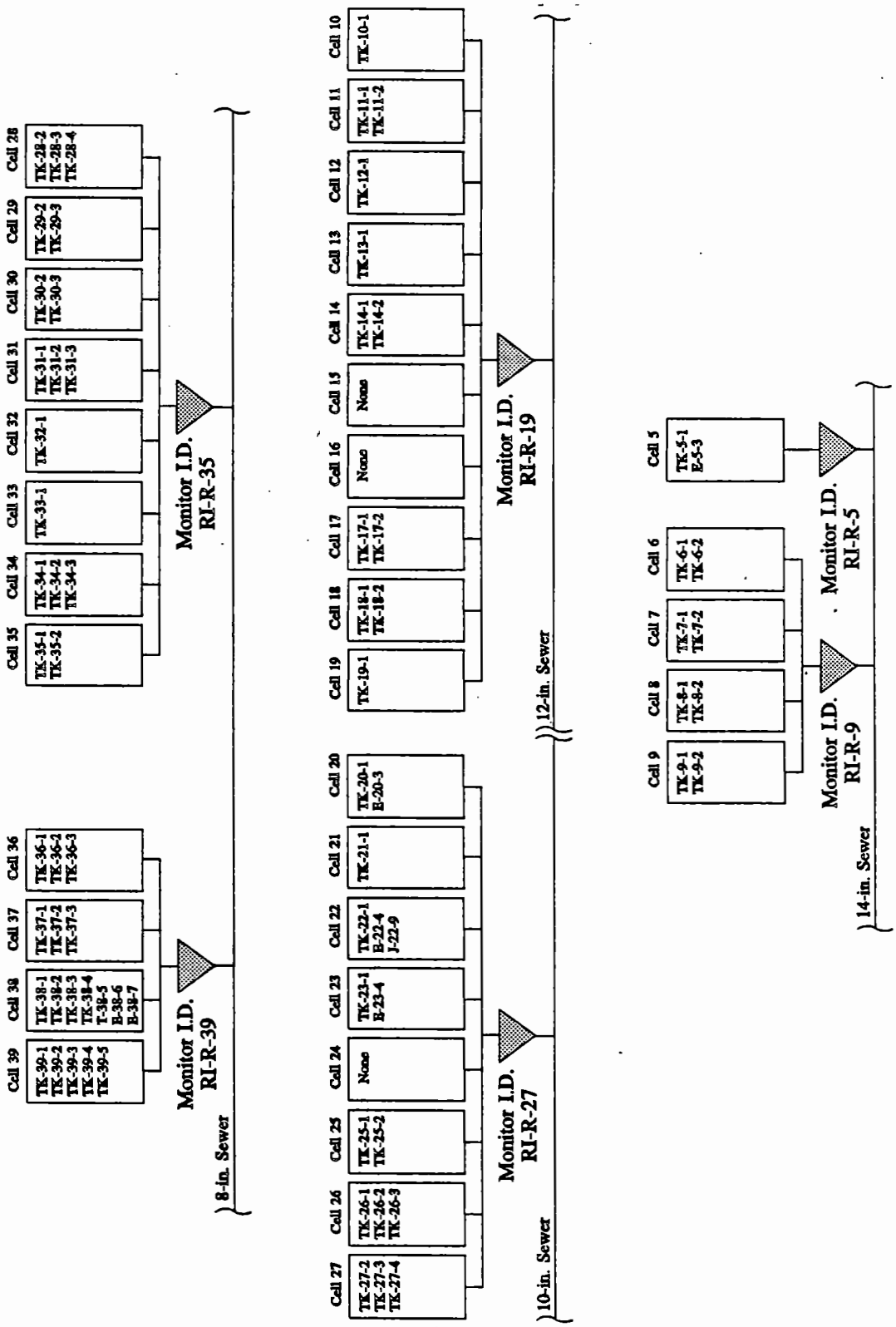

4.2.1.4 BCE. The BCE handles water flushes, steam condensate, and other liquid streams that are known not to contain radioactive or chemical contaminants. The BCE can also receive spills, chemical drains, water flushes, and other effluents from drains in the 221-B, 217-B, and 271-B Buildings and the 211-B Area where these various chemicals are stored and used. During normal operating conditions, the BCE receives only water and nonregulated buffer solution from these contributors. Administrative controls are in place to preclude the discharge of radioactive or chemical contaminants.

4.2.1.5 Sanitary Sewers (2607-E3 and 2607-E4). The sanitary sewer system is isolated from B Plant processing activities. The routine operation of the waste processing systems does not affect the sanitary sewer operation.

4.2.1.6 French Drains. The routine operation of B Plant waste processing does not affect the function or flow from the French drains.

4.2.2 Gaseous Effluents

Historical monitoring data from B Plant stacks and vents consist primarily of gross alpha and beta results. Estimates of individual radionuclides released from the B Plant stacks under routine operating conditions are given in Table 4-7. Maximum measured gross alpha and gross beta values for the stacks during the 1985–1989 time period (Table 8-9) were used to estimate the individual radionuclide emissions given in Table 4-7. Activity percentages for the individual radionuclides, as given in Footnote B to Table 4-7, were taken from Appendix A. Individual post-control radionuclide activities for ^{137}Cs, ^{137m}Ba, ^{90}Sr, and ^{90}Y were calculated by multiplying the measured post-control beta activity by the activity percentage for the individual beta/gamma emitters. Likewise, post-control alpha emitter

Table 4-7. Maximum Annual Average Calculated Radionuclide-Specific Stack Releases for Routine Operations.

Stack	Post-control concentration[a] (µCi/mL)		Calculated post-control radionuclide concentrations[b] (µCi/mL)						DF
	Beta	Alpha	^{137}Cs	^{137}Ba	^{90}Sr	^{90}Y	$^{239,240}Pu$	^{241}Am	
291-B-1	1.76 E-11	<8.39 E-15	5.28 E-12	5.28 E-12	3.52 E-12	3.52 E-12	<6.46 E-15	<1.93 E-15	2 E+04[c]
291-B-5	5.38 E-14	<3.56 E-15	1.61 E-14	1.61 E-14	1.08 E-14	1.08 E-14	<2.74 E-14	<8.19 E-16	3 E+03[c]
296-B-10	8.12 E-13	<3.52 E-15	2.44 E-13	2.44 E-13	1.62 E-13	1.62 E-13	<2.71 E-15	<8.10 E-16	1 E+06[c]
296-B-13	5.26 E-14	<4.12 E-15	1.58 E-14	1.58 E-14	1.05 E-14	1.05 E-14	<3.17 E-15	<9.48 E-16	1 E+07[c]
296-B-14	1.72 E-13	<9.44 E-15	5.16 E-14	5.16 E-14	3.44 E-14	3.44 E-14	<7.27 E-15	<2.17 E-15	2 E+03[d]

[a]Maximum value for years 1985-1989; taken from Table 8.9.
[b]Emissions calculated from beta and alpha concentrations based on 30% Cs, 30% Ba, 20% Sr, and 20% Y for beta/gamma emitter and 77% Pu and 23 % Am for alpha emitters. Source: Appendix A.
[c]Factor calculated from DOP efficiency testing data.
[d]Factor projected based on minimum acceptable criteria for HEPA filters of 99.95% efficiency.

concentrations were calculated by multiplying the measured post-control alpha activity by the activity percentages for the individual alpha emitters. Actual individual radionuclide monitoring data for the 291-B-1 Stack (Section 8.1.2) indicate that the calculated data in Table 4-7 may tend to

over-estimate $^{89,90}Sr$ concentrations by one to two orders of magnitude, while the concentrations of other radionuclides appear to agree reasonably well. Comparison of routine stack releases with the 40 CFR Part 61 regulatory limits (EPA 1989c) are given in Tables 4-8 through 4-12.

The stack release values given in Tables 4-8 through 4-12 represent the calculated post-control radionuclide concentrations (Table 4-7). The offsite post-control values given in Tables 4-8 through 4-12 were calculated by multiplying the stack release values by the atmospheric dispersion factor (X/Q) of 1E-05, which was taken from the *B Plant Preliminary Accident Analysis* (WHC 1989c). The regulatory limits for each radionuclide given in Tables 4-8 through 4-12 are based on the NESHAPs standard of 10 mrem/yr EDE, assuming the radionuclide in question is the only one released and that the stack in question is the only release point for the facility. The offsite post-control percent regulatory limit was calculated by dividing the offsite post-control value by the regulatory limit. The offsite percent regulatory pre-control limit was calculated by multiplying the offsite post-control percent regulatory limit by the DF. The DFs given in Table 4-7 were determined based on DOP efficiency testing or were projected based on the minimum acceptable criteria for HEPA filters of 99.95% efficiency, as indicated in Table 4-7. The offsite pre-control percent regulatory limit was determined because when determining whether effluent monitoring is required, emission controls between the point of generation and the discharge point are not to be considered. Since NESHAPs (EPA 1989c) requires that all stacks and vents that have the potential to discharge radionuclides into the air in quantities that could cause an EDE in excess of 1% of the 10 mrem/yr standard, all offsite pre-control percent regulatory limit values greater than 1.0×10^{00} in Tables 4-8 through 4-12 are above the level requiring emission rate monitoring. Any radionuclide contributing at least 10% of the dose from the stack requiring monitoring must be measured.

Identification and characterization of contributors to each gaseous effluent stream during normal operating conditions is presented in the following.

4.2.2.1 B Plant/WESF Stacks. Following is information on B Plant/WESF stack contributors during normal conditions.

291-B-1 Stack--In the past, during normal operations of B Plant, sources of nitrogen oxide constituted the only nonradiological emissions of potential regulatory concern. The source of nitrogen oxides is nitric acid used in the separation process. However, the emission concentration of nitrogen oxides has been estimated to be less than 5 ppm (RHO 1986).

The "D" Filter system provides particulate decontamination of the 221-B ventilation system under normal operating conditions. The system is dioctylpthalate (DOP) tested as a unit at least quarterly. Testing of the filter has indicated an efficiency of 99.995%, which equates to a DF of

Table 4-8. Comparison of Routine Stack Releases With Regulatory Limits for the 291-B-1 Stack.

Constituent	Post-Control concentration (µCi/mL)		Regulatory limit[c] (µCi/mL)	Offsite % regulatory limit	
	Stack release[a]	Offsite[b]		Post-control	Pre-control[d]
^{137}Ce	5.28 E-12	5.28 E-17	4.0 E-11	1.32 E-04	2.64 E+00
^{137m}Ba	5.28 E-12	5.28 E-17	3.0 E-09	1.80 E-06	3.6 E-02
^{90}Sr	3.52 E-12	3.52 E-17	9.0 E-13	3.91 E-03	7.82 E+01
^{90}Y	3.52 E-12	3.52 E-17	1.0 E-10	3.52 E-05	7.04 E-01
$^{239,240}Pu$	<6.46 E-15	<6.46 E-20	2/0 E-15	<3.23 E-03	<6.46 E+01
^{241}Am	<1.93 E-15	<1.93 E-20	2.0 E-15	<9.65 E-04	<1.93 E+01
				Total	<1.65 E+02

[a]From Table 4-7.
[b]Calculated based on an atmospheric dispersion factor (X/Q) of 1 E-05 for the offsite maximally exposed individual.
[c]Based on the NESHAPs (EPA 1989c) standard of 10 mrem/yr EDE and assuming that the radionuclide in question is the only one released and that the stack is the only release point for the facility.
[d]Calculated by multiplying the post-control offsite percent regulatory limit by the DF (see Table 4-7). Stacks with potential radionuclide emission rates exceeding 1.0% under routine operating conditions must be sampled or monitored. Any radionuclide contributing at least 10% of the dose from the stack must be measured for stacks requiring monitoring.

Table 4-9. Comparison of Routine Stack Releases With Regulatory Limits for the 296-B-5 Stack.

Constituent	Post-Control concentration (µCi/mL)		Regulatory limit[c] (µCi/mL)	Offsite % regulatory limit	
	Stack release[a]	Offsite[b]		Post-control	Pre-control[d]
^{137}Ce	1.61 E-14	1.61 E-19	4.0 E-11	4.02 E-07	1.21 E-03
^{137m}Ba	1.61 E-14	1.62 E-19	3.0 E-09	5.37 E-09	1.61 E-05
^{90}Sr	1.08 E-14	1.08 E-19	9.0 E-13	1.20 E-05	3.60 E-02
^{90}Y	1.08 E-14	1.08 E-19	1.0 E-10	1.08 E-07	3.24 E-04
$^{239,240}Pu$	<2.74 E-15	<2.74 E-20	2.0 E-15	<1.37 E-03	<4.11 E+00
^{241}Am	<8.19 E-16	<8.19 E-21	2.0 E-15	<4.10 E-04	<1.23 E+00
				Total	<5.38 E+00

[a]From Table 4-7.
[b]Calculated based on an atmospheric dispersion factor (X/Q) of 1 E-05 for the offsite maximally exposed individual.
[c]Based on the NESHAPs (EPA 1989c) standard of 10 mrem/yr EDE and assuming that the radionuclide in question is the only one released and that the stack is the only release point for the facility.
[d]Calculated by multiplying the post-control offsite percent regulatory limit by the DF (see Table 4-7). Stacks with potential radionuclide emission rates exceeding 1.0% under routine operating conditions must be sampled or monitored. Any radionuclide contributing at least 10% of the dose from the stack must be measured for stacks requiring monitoring.

Table 4-10. Comparison of Routine Stack Releases With Regulatory Limits for the 296-B-10 Stack.

Constituent	Post-Control concentration (µCi/mL)		Regulatory limit[c] (µCi/mL)	Offsite % regulatory limit	
	Stack release[a]	Offsite[b]		Post-control	Pre-control[d]
^{137}Ce	2.44 E-13	2.44 E-18	4.0 E-11	6.10 E-06	6.10 E+00
^{137m}Ba	2.44 E-13	2.44 E-18	3.0 E-09	8.13 E-09	8.13 E-03
^{90}Sr	1.62 E-13	1.62 E-18	9.0 E-13	1.80 E-04	1.80 E-02
^{90}Y	1.62 E-13	1.62 E-18	1.0 E-10	1.62 E-06	1.62 E+00
$^{239,240}Pu$	<2.71 E-15	<2.71 E-20	2.0 E-15	<1.36 E-03	<1.36 E+03
^{241}Am	<8.10 E-16	<8.10 E-21	2.0 E-15	<4.05 E-04	<4.05 E+02
				Total	<1.95 E+03

[a]From Table 4-7.
[b]Calculated based on an atmospheric dispersion factor (X/Q) of 1 E-05 for the offsite maximally exposed individual.
[c]Based on the NESHAPs (EPA 1989c) standard of 10 mrem/yr EDE and assuming that the radionuclide in question is the only one released and that the stack is the only release point for the facility.
[d]Calculated by multiplying the post-control offsite percent regulatory limit by the DF (see Table 4-7). Stacks with potential radionuclide emission rates exceeding 1.0% under routine operating conditions must be sampled or monitored. Any radionuclide contributing at least 10% of the dose from the stack must be measured for stacks requiring monitoring.

Table 4-11. Comparison of Routine Stack Releases With Regulatory Limits for the 296-B-13 Stack.

Constituent	Post-Control concentration (µCi/mL)		Regulatory limit[c] (µCi/mL)	Offsite % regulatory limit	
	Stack release[a]	Offsite[b]		Post-control	Pre-control[d]
^{137}Ce	1.58 E-14	1.58 E-19	4.0 E-11	3.95 E-07	3.95 E+00
^{137m}Ba	1.58 E-14	1.58 E-19	3.0 E-09	5.27 E-09	5.27 E-02
^{90}Sr	1.05 E-14	1.05 E-19	9.0 E-13	1.17 E-05	1.17 E+02
^{90}Y	1.05 E-14	1.05 E-19	1.0 E-10	1.05 E-07	1.05 E+00
$^{239,240}Pu$	<3.17 E-15	<3.17 E-20	2.0 E-15	<1.58 E-03	<1.58 E+04
^{241}Am	<9.48 E-16	<3.17 E-21	2.0 E-15	1.58 E-04	1.58 E+03
				Total	<6.33 E+04

[a]From Table 4-7.
[b]Calculated basd on an atmospheric dispersion factor (X/Q) of 1 E-05 for the offsite maximally exposed individual.
[c]Based on the NESHAPs (EPA 1989c) standard of 10 mrem/yr EDE and assuming that the radionuclide in question is the only one released and that the stack is the only release point for the facility.
[d]Calculated by multiplying the post-control offsite percent regulatory limit by the DF (see Table 4-7). Stacks with potential radionuclide emission rates exceeding 1.0% under routine operating conditions must be sampled or monitored. Any radionuclide contributing at least 10% of the dose from the stack must be measured for stacks requiring monitoring.

Table 4-12. Comparison of Routine Stack Releases With Regulatory Limits for the 296-B-14 Stack.

Constituent	Post-Control concentration (µCi/mL)		Regulatory limit[c] (µCi/mL)	Offsite % regulatory limit	
	Stack release[a]	Offsite[b]		Post-control	Pre-control[d]
^{137}Ce	5.16 E-14	5.16 E-19	4.0 E-11	1.29 E-06	3.33 E-04
^{137m}Ba	5.16 E-14	5.16 E-19	3.0 E-09	1.72 E-05	3.44 E-05
^{90}Sr	3.44 E-14	3.44 E-19	9.0 E-13	3.82 E-05	7.64 E-02
^{90}Y	3.44 E-14	3.44 E-19	1.0 E-10	3.44 E-07	6.88 E-04
$^{239,240}Pu$	<7.27 E-15	<7.27 E-20	2.0 E-15	<3.64 E-02	<7.27 E+01
^{241}Am	<2.17 E-15	<2.17 E-20	2.0 E-15	<1.08 E-03	<2.17 E+00
				Total	<7.49 E+01

[a]From Table 4-7.
[b]Calculated based on an atmospheric dispersion factor (X/Q) of 1 E-05 for the offsite maximally exposed individual.
[c]Based on the NESHAPs (EPA 1989c) standard of 10 mrem/yr EDE and assuming that the radionuclide in question is the only one released and that the stack is the only release point for the facility.
[d]Calculated by multiplying the post-control offsite percent regulatory limit by the DF (see Table 4-7). Stacks with potential radionuclide emission rates exceeding 1.0% under routine operating conditions must be sampled or monitored. Any radionuclide contributing at least 10% of the dose from the stack must be measured for stacks requiring monitoring.

2×10^{-04} for 0.3 µm particles (RHO 1986). The *Environmental Compliance Manual*, WHC-CM-7-5, requires that the filtration system be able to remove at least 99.95% of DOP particles (WHC 1988c). The full rated flow of filter capacity is 80,000 ft^3/min. The emergency backup sand filter system DF has been determined by testing to be 2.38×10^3 (RHO 1986).

296-B-5 Stack--The 221-BB Building weir tank vault is contaminated from past upset of the BCS and BCP streams. The ventilation system for the building consists of an air supply evaporative cooler and is exhausted through a single-stage HEPA filtration system via the 296-B-5 Stack. A DF of the HEPA filtration system during normal operating conditions is rated to be greater than 2×10^3. Available DOP filter efficiency data confirms that the DF exceeds 3×10^3 (RHO 1986).

296-B-10 Stack--During normal process operations, the ventilation systems maintain segregation of contaminated areas in WESF. Radioactive contamination spread during normal operation occurs predominantly from manipulator replacements. Loose contamination on the manipulator can drop to the floor of the operating gallery during replacement or become airborne and spread to other surfaces, as well as to the K-1 HVAC system.

K-1 Heating, Ventilation, and Air Conditioning Supply and Exhaust System--The areas that are ventilated with the K-1 system vary in contamination potential from very low contamination to areas that are contaminated to a great extent. Of these areas, regulated manipulator repair represents the highest potential for contamination, resulting from contaminated manipulator repair and decontamination. The major isotopes involved are ^{137}Cs and ^{90}Sr.

K-3 Heating, Ventilation, and Air Conditioning Supply and Exhaust System--The canyon and process cells, which are supplied and exhausted by the K-3 HVAC System, are normally the most contaminated areas of WESF. Although the

inventory in the process cells can vary depending upon the campaign underway, it is possible that up to 1 MCi of cesium and 1 MCi of strontium could be available within the process cells of the WESF.

K-4 Heating, Ventilation, and Air Conditioning Supply and Exhaust System--The K-4 HVAC system supplies a maximum of 8000 ft^3/min of air to the capsule storage area on a once-through basis. Though a large inventory of Cs and Sr are stored in the pool cells, they are double encapsulated and stored beneath 13 ft of water. Therefore, they are not considered a credible source term. The pool cell area is free of smearable contamination.

296-B-13 Stack--The source term to the 296-B-13 Stack/221-BF Ventilation System is equivalent to that of 221-BB except that only the BCP (not the BCS/BCP) liquid effluent is involved. As in 221-BB, a portion of the building is accessible to personnel not wearing radiological protective clothing. The 221-BF ventilation exhausts through a two-stage HEPA system having one filter cartridge in each stage. There is no prefilter. A DF of at least 4×10^6 would be expected under all conditions of normal operation of this system, and DOP filter efficiency data have confirmed that the DF exceeds 1.1×10^7 (RHO 1986). Exhaust fan modulation is provided by a manually-operated, opposed-blade damper. A back-draft damper on the supply air inlet to 221-BF guards against potential for unfiltered back flow.

296-B-14 Stack--As a result of the B Plant mission, the concentrations of the radionuclides cesium and strontium may be greatly increased in specific vessels within the facility. Based on minimum acceptable criteria for HEPA filters of 99.95% efficiency, the minimum DF of the system is 2.0×10^3 (RHO 1986).

4.2.2.2 Gallery Exhausters (296-B-21 through 296-B-27). There are seven outside mounted EFs, located on the north side of 221-B, of which six EF#2 through EF#7 serve the pipe gallery. EF#1 is currently not operating. During in-cell operation, the air flow patterns are adjusted by selective operation of the supply fans. Available DOP filter efficiency data confirms that the DF exceeds 3.0×10^3 (RHO 1986).

4.2.2.3 WESF Jet 296-B-12. The WESF Emergency Jet is not used during routine processing operations.

4.2.2.4 211-B Tank Farm. Nonradioactive materials are stored in this area, and no potential for radioactive effluent exists.

Under normal operating conditions, no environmental or personnel hazard is anticipated from the 211-B Tank Farm facility (RHO 1986). Similarly, no problems are expected during internal B Plant upset conditions.

4.2.2.5 AMU Tank Vents. None of the chemicals used in the AMU are radioactive. There is no potential for radioactive release, and radiological sampling and monitoring are not provided.

The AMU tanks on the third floor are vented to the atmosphere through discharge vents on top of the 221-B Building. Air jets provide the motive

force. No nonradiological sampling or monitoring is provided. The 271-B AMU tanks are currently empty. Secondary containment barriers are to be constructed during environmental upgrades prior to future use of these tanks.

4.3 UPSET OPERATING CONDITIONS

4.3.1 Liquid Effluents

Tables 4-3 through 4-6 provide worst-case estimates of discharges during B Plant upset operating conditions. Releases due to an upset in the CBC 15-in.-dia. header, the BCS, and the BCP are given in Tables 4-3 through 4-5. For purposes of the upset condition, it was assumed that the entire inventory of the potential contaminants were released. These values are shown in the potential contamination column. However, the likelihood of such an event occurring is extremely small due to the control barriers, administrative procedures, and the presence of in-line radiological monitoring and diversion capabilities.

Table 4-6 presents upset release values for the BCE. Upset scenarios are based on one spill rupture, or leakage of a single tank, drum, etc., over a period of a few hours. Based on probability and safety analysis, it is highly unlikely that multiple spills or leaks of a major magnitude would occur within the same time period. The more likely event would involve spillage of small quantities of material or slow leakage from drums or other containers. Events such as these that result in concentrations of contaminants exceeding discharge limits will be detected by an appropriately designed monitoring and sampling system, and action may then be taken to mitigate any potentially adverse environmental or health and safety concerns.

Identification and characterization of contributors to each liquid effluent stream during upset operating conditions is presented in the following.

4.3.1.1 BCS. The BCS high activity excursions have occurred in the past. In September 1983, high BCS activity was detected in excess of the limits imposed at the time. Investigation did not find the exact cause of the excursion, but the west half of the 114 header servicing discharge from cooling coils for tanks TK-28-4, TK-30-3, and TK-31-1 was discontinued from use.

In September 1984, high BCS activity was detected in excess of the limits imposed at the time. Investigation found the source to be from cross-ties between the BCP and BCS lines. Contamination from the BCP was carried over to the BCS by these cross-ties. As a result of the investigation, the BCP system was isolated from the BCS system. Also, the 114 header was diverted to TK-24-1.

The BCS stream can be diverted to the 216-B-64 Basin if monitoring in 221-BB identifies the need to recycle the stream.

4.3.1.2 BCP. The BCP discharge can be recycled via installed piping to Tank TK-24-1 in the B Plant low-level waste treatment system from either the 221-BF-A and -B Tanks or the BCP weir tank in 221-BB.

Shutdown of the low-level waste concentrator is a viable option to react to unacceptable BCP discharge concentration, although other B Plant processing throughput may also be impacted by the limited liquid lag storage within the facility.

Past nonradiological constituent screening of BCP samples has shown that pH concentrations were relatively high compared to appropriate RHO-MA-139 (RHO 1985a) criteria. These properties of the BCP stream are of concern primarily because of their effect on sorption capacity of the soil column for radionuclides (RHO 1986).

4.3.1.3 CBC. In the event of loss of raw water supply from the 282-E Facility reservoir, B Plant and WESF have two emergency wells. Two diesel-driven backup emergency pumps 282-B and 282-BA Pumphouses can supply the necessary volume of raw water to meet the minimum process cooling requirements for B Plant and WESF. In the event that high activity is detected in the 15-in. header, that stream will be automatically diverted to the 216-B-59 emergency retention basin. In the event that high activity is detected, the combined cooling water stream can be manually diverted at the 207-B basin from the normal 216-B-2-3 ditch to the emergency backup ditch-216-B-63 (also normally used for disposal of BCE stream).

Loss of one or both of the two on-line beta and gamma monitors located in 221-BA and 221-BG, as described in Section 2.0, requires additional manual sampling of the CBC stream until the monitor(s) have been returned to service.

4.3.1.4 BCE. The potential exists for any chemical used at B Plant for processing or housekeeping to be discharged into the BCE. Chemicals such as HEDTA, EDTA, and nitric acid are stored in relatively large quantities and varying concentrations to support B Plant processing and may contribute to the BCE stream during upset conditions. Smaller quantities of other liquids (i.e., 55-gal drums of sulfuric acid) are also stocked in BCE drainage areas. Administrative controls are, however, in place to preclude the discharge of radiological or chemical contaminants into the BCE system.

4.3.1.5 Sanitary Sewers (2607-E3 and 2607-E4). Sanitary sewers 2607-E3 and 2607-E4 would not be affected by B Plant upset operating conditions.

4.3.1.6 French Drains. The French drain system would not be affected by B Plant upset operating conditions.

4.3.2 Gaseous Effluents

Identification and characterization of contributors to each gaseous effluent stream during upset operating conditions is presented in the following. Estimate of radioactivity releases have been made, and these are discussed in Section 4.3.2.6.

4.3.2.1 B Plant/WESF Stacks. Following is information on B Plant/WESF stack contributors during upset operating conditions.

291-B-1 Stack--The canyon and process cells have been contaminated as a result of past and ongoing operations. Contaminants may become subject to dispersion in the ventilation air through process (i.e., equipment failures, leakage of process solutions, and remote maintenance operations).

The 291-B-1 HEPA filter system has automated sprinklers for fire protection. A sand filter is maintained for use as an emergency backup to the "D" Filter system. Air flow transition to the sand filter is activated by smoke or heat. Design flow for the sand filter is 25,000 ft^3/min, so flow must be reduced and processing activities curtailed whenever the sand filter is used. The DOP testing has determined the sand filter efficiency to be 99.958% at design flow, which equates to a DF of at least 2.38×10^3.

Inventories of mixed fission products have been routinely processed through 221-B and its support facilities in the past. An assessment of these activities characterized the source terms as follows:

Source	Location
Quantities of mixed fission products in waste	Process cells and gaseous effluent filters
Quantities of concentrated ^{137}Cs and ^{90}Sr solutions	Storage vessels in process cells
Mixed fission products	Waste water and condensate streams
Mixed fission products	Cask transfer facility
^{137}Cs and ^{90}Sr	Canyon ventilation exhaust filters

The actual extent of resuspension of radioactivity in ventilation air is a complex function of surface area, temperature differential, vapor pressure, and other parameters. Therefore, no attempt has been made to quantitatively model the introduction of radionuclides into the ventilation systems.

296-B-5 Stack--The potential source term for the 296-B-5 Stack is low relative to the canyon and vessel ventilation system, except that some smearable contamination is known to be present in 221-BB. The BCS and BCP streams can be shut down, if increased activity is indicated in the stack monitoring system (i.e., above specified limits). The risk of appreciable airborne release is mitigated largely by controls on BCS and BCP effluents (RHO 1986).

296-B-10 Stack--Abnormal spreads of contamination can occur when one of the contaminated areas interfaces directly with a less contaminated or clean area on another ventilation system. Engineering controls (automatic shutdown, interlocks, alarms, etc.) are incorporated to reduce chances of occurrence.

The ventilation systems at WESF have never failed. A full shut down has been deemed feasible if all heat sources throughout the facility have been turned off. The 225-B Building was built with the intent that natural convection would be toward the most contaminated areas (RHO 1986b).

In the event of a ventilation failure, the backup exhaust fans and WESF emergency jet are designed to turn on automatically. Several safety interlocks are built into the HVAC systems to prevent a total loss of air flow and differential pressure if any one system fails.

The K-1 Heating, Ventilation, and Air Conditioning Supply and Exhaust System--The hood in the Regulated Manipulator Repair Room the area with the highest contamination level potential contains an in-line HEPA filter so that the exhaust air from the room is filtered before passing through the 296-B-10 Stack main filtration system.

The K-3 Heating, Ventilation, and Air Conditioning Supply and Exhaust System--During nonroutine operation when a cell cover block is removed, approximately 3,000 ft^3/min of air enters that cell from the canyon and is exhausted by allowing excess air to enter adjacent cells through the pass-through and is passed through each cell exhaust damper into the K-3 duct.

With the containment and confinement features provided by the process cell design, as well as the filtration/ventilation system, no major incidents of contamination release to the environment have been experienced from K-3 Process Cell operations.

The K-4 Heating, Ventilation and Air Conditioning Supply and Exhaust System--Since the capsules are maintained under 13 ft of water and the water is monitored for radioactivity content, the potential for airborne release from this source is low.

296-B-13 Stack--The airborne source term associated with the BCP liquid interface is low. However, upsets with concentrator transients have the potential to introduce much higher levels into the 221-BF vessels. The BCP effluent can be shut down, if increased activity is indicated in the stack monitoring system (i.e., above specified limits). The 296-B-13 exhaust also can be shut down by access to the exhaust fan adjacent and external to the 221-BF Building.

296-B-14 Stack--In the past, the offgases from the 221-B Building process cells collected by VVS#2 were discharged below grade to the 24-in.-dia. cooling water header. The discharge stack is designated as 296-B-14 (see Figure 2-16). The VVS#2 system is currently not operating and has been down since November 1990. Vessels that were serviced by the VVS#2 are currently vented through VVS#1. For proposed future operation, a system upgrade has been designed to conform the VVS#2 sampling and monitoring system to be consistent with the other four B Plant/WESF stack cabinet layouts.

The VVS#2 system was originally designed to vent, scrub, and filter gases from process vessels in which ammonia was potentially present to prevent ammonia nitrate build-up on the filters; however, no ammonia sources are currently present in the plant. Some vessels vented to the main vent header 146 via two other headers-69-A and 69-B-while others vented directly to header 146. The gases collected through Header 146 to Cell 22 were then processed through an ammonia scrubber, a heater to reduce the relative humidity of the vapor stream, a glass-fiber prefilter, and a bank of two-stage HEPA filters. Then the air flows to an outside filter pit on the south side of the 221-B Building. The pit contains a bank of two-stage HEPAs and a jet that provides the motive force for the stream. The air is continuously

monitored from a tie-in near the outlet of these filters and finally discharges into the 24-in.-dia. cooling water header. The airborne effluent mixes with the cooling water before final disposal to the 216-B-3 Pond via the 207-B Retention Basin.

4.3.2.2 Gallery Exhausters (296-B-21 through 296-B-27). Procedures are in place to initiate high-volume air sampling, using a portable air sampler, at the exhaust point closest to the gas air sampling at the exhaust point gallery affected in the event of a contamination upset in the galleries. If warranted by upset conditions, the flow through the gallery exhaust points 296-B-21 through 296-B-27 can be reduced, and air flows can be routed through the crane cab access doorways to the canyon (291-B-1 vent system).

Since these seven systems exhaust areas that are routinely occupied by operational personnel, the nonradiological hazards of the areas are generally more limiting than environmental concerns. Occasional maintenance work on asbestos lagging occurs in the galleries. Any environmental release of this asbestos is mitigated by the use of greenhouses and HEPA filtration.

4.3.2.3 WESF Emergency Jet (296-B-12). When loss of K-3 negative pressure requires automatic operation by the emergency steam jet, areas served by the K-1 and K-4 systems are evacuated; and all processing is suspended. Evacuation is maintained until the K-3 system is operating by normal supplied power and required negative pressure is again established in the K-1 area. If the negative pressure cannot be restored, all processing is terminated according to emergency procedures; and the evacuation situation is maintained until the ventilation problem is satisfactorily resolved.

4.3.2.4 211-B Tank Farm. During internal B Plant upset conditions, no environmental or personnel hazard is anticipated from the 211-B Tank Farm facility (RHO 1986). Potential problems could develop from circumstances such as significant seismic events. Secondary containment will be provided after the construction of retention basins for selected chemical tanks during 211-B Tank Farm environmental compliance upgrades.

4.3.2.5 AMU Tank Vents. During internal B Plant upset conditions, no environmental or personal hazard is anticipated from the AMU areas (RHO 1986). Potential problems could develop from circumstances such as significant seismic events. Current construction of a retention basin for these tanks will provide a level of secondary containment in the event of seismic activity or tank rupture.

4.3.2.6 Upset Scenarios. Accident scenarios have been analyzed for various gaseous upset conditions within the B Plant complex in the *B Plant Preliminary Accident Analysis* (WHC 1989c). A brief description of the scenario, releases, and resulting exposures are taken from (WHC 1989c) and are presented as

follows. All assumptions made in the following scenarios are made in order to present a "worst case" accident. Therefore, all estimated onsite and offsite doses consequences are conservatively high estimates.

Blowback into the Gallery--A blowback is a flow of process solution back into the pipe gallery due to tank pressurization. A blowback into the pipe or operating gallery could occur if a tank becomes pressurized and if a line from the gallery into the tank (e.g., a chemical addition line or an instrument dip tube line) breaks. All B Plant process tanks were reviewed to determine if there is a source for pressurization and a piping path from the tank to the gallery. The low-level waste and cesium concentrators (Cells 23 and 38; Figure 4-6) were the only equipment found to have a source for pressurization large enough to overcome the vessel vent system and pressurize both the tank and a piping path to the gallery.

Events leading to the release are (1) break of 40 tubes in the concentrator, (2) failure of the steam pressure regulating valve, (3) failure of the steam supply valve, (4) failure of the condensor, (5) a pipe break in the gallery, and (6) failure of the HEPA filters to provide any filtering capabilities. The resulting release is calculated to be a maximum 1153 Ci of ^{137}Cs released from B Plant at ground level. The consequences of this release are shown below.

Dose	Onsite	Offsite
Effective whole body	4.9 rem	0.1 rem inhalation 65 rem ingestion

Hydrogen Explosion--Hydrogen is formed in the process tanks as a result of radiolysis of the solution. The tank with the highest radionuclide content is Tank 36-1 (Cell 36; Figure 4-6)—the cesium storage tank. It is assumed that all of the cesium processed from the aging waste tanks was stored in this tank. This equates to 2,737 gal of cesium solution using the NCAW demonstration flow sheet values of 119 gal of cesium solution (at 1700 Ci/L) for 10^5 gal processed and a value of 2.3×10^6 Ci total to be processed. The total activity of the cesium in the tank is 17.6×10^6 Ci.

The instrument air (which is used for dilution) is assumed to fail. The tank is assumed to be leak-tight so that after a while the vessel vent flow from the tank ceases. Hydrogen builds up in the tank. When it reaches a volume fraction of 0.2, it is assumed to explode. The calculation of the pressure buildup in the canyon indicates that the doors in the canyon would not open, and the filter system survives the explosion. The initial release is 8,448 Ci of ^{137}Cs; but the one bank of HEPA filters decreased by a factor of 5×10^4, resulting in an actual release of 4.2 Ci. The resultant doses for this scenario are as follows:

Dose	Onsite	Offsite
Effective whole body	<1 mrem	<1 rem inhalation 0.24 rem ingestion

Ion Exchange Column Explosion--If 12M HNO_3 is mixed with the resin of the ion exchange column, a rapid chemical reaction results. The reaction produces gas and energy. The gas generation rate is very rapid and, therefore, so is the pressure increase in the column.

Nitric acid is pumped through the ion exchange column to remove the sodium from the resin (Na scrub) and to remove the cesium from the resin (cesium elution first and second cycle). In each case, a batch is made up in a tank outside the process in the cell. There are instruments in the chemical makeup tank and in the tank to which it flows. All of the solution gets pumped to the ion exchanger from Tank 18-3 (Cell 18). Tank 18-3 has a specific gravity and conductivity monitor. Both are interlocked to the pump. Therefore, at least one operator error (the mixing of a bad batch) and then two or three independent instrument or electronic failures are necessary to result in 12M HNO_3 in the ion exchange column. Given that these three or four failures occur, 12M HNO_3 will enter the column resulting in an explosion. The flow paths out of Cell 18 after the explosion are into the canyon and into the air tunnel and subsequently out the 291-B-1 Stack. The explosion results in a release of 499.2 Ci ^{137}Cs with the following radiation exposure levels:

Dose	Onsite	Offsite
Effective whole body	2.1 rem	0.04 rem inhalation 28 rem ingestion

Solvent Fire--A solvent fire could occur if the solvent were flammable and in the presence of an ignition source. The *B Plant Safety Analysis Report* (SAR) (RHO 1986) presents the results of two solvent fires: one in which the hot gases from the fire heat the filter and drive off material that was on the filter, and a second case in which flaming debris impact the filter. The second case has a probability too low to consider (3.8×10^{-9}). The radioactivity released out of the facility was primarily due to filter release and not to what came off the solution due to the fire.

The primary concern is the release from the filters. The SAR used a value of 3% breakthrough for each filter bank. The release in the SAR is 198 Ci ^{137}Cs and 18 Ci ^{90}Sr in an elevated release. Release through the 291-B-1 Stack would result in an inhalation dose to the offsite individual of 0.02 rem whole body and 0.1 rem bone, while the ingestion dose would be 8.9 rem whole body and 10 rem bone.

This page intentionally left blank.

5.0 EFFLUENT POINT OF DISCHARGE DESCRIPTION

Effluent discharge points, as used herein, are defined as the final point where effluents are monitored, sampled, diverted, otherwise controlled, or where the stream exits the facility into the environment.

Following is a brief description of the liquid and gaseous effluent points at B Plant/WESF (WHC 1990b).

5.1 LIQUID EFFLUENTS

Liquid effluent discharge points are presented in Table 5-1 and are discussed below.

Table 5-1. Liquid Effluent Discharge Points.

Hanford Site effluent point designation	Associated facility	Identification of contributing streams	Physical dimensions of effluent point
216-B-55 Crib	221-B, 221-BB	BCS (normal)	Enclosed trench
216-B-59 Retention Basin	221-B, 15-in. cooling water header	CBC 15-in. (upset)	280,000 gal covered concrete basin (120,000 working limit), 15 ft below grade
216-B-63 Ditch	221-B, 271-B, 225-B	BCE (normal) CBC (upset)	4 ft x 8 ft x 2,400 ft open trench
216-B-64 Emergency Retention Basin	221-B, 221-BB	BCS (upset)	10,000 gal working limit covered concrete basin
216-B-62 Crib	221-B, 221-BF	BCP	Enclosed trench
216-B-3 Pond (B Pond)	207-B, 221-B	CBC (normal)	Open pond
2607-E-3 Tile Field	221-B, 225-B, and all trailers	Sanitary sewer	23 x 4 ft x 300 in.
2607-E-4 Tile Field	East end of 221-B	Sanitary sewer	3 x 4 in. x 70 ft

5.1.1 B Plant Steam Condensate to the 216-B-55 Crib

The source of this stream is B Plant steam condensate from E-23-3. The effluent has a beta monitor and a flow-controlled Manning S-5000 incremental sampling system.

5.1.2 B Plant Process Condensate to the 216-B-62 Crib

The source of this stream is B Plant process condensate from the E-23-3 Concentrator. Batch samples are withdrawn from collection tanks in 221-BF as allowed by the DOE 5400 series of Orders. The samples are analyzed and confirmed to be below and within the discharge limits specified in DOE Order 5400.1 (DOE 1988a) and as implemented in WHC-CM-7-5 (WHC 1988c) prior to its discharge.

5.1.3 B Plant Chemical Sewer to the 216-B-63 Ditch

The contributor discharges to the BCE stream include Tank 2902 sanitary water, steam condensate from space heaters, and periodic regenerant discharge from the 217-B. In addition to these, the following are controlled administratively.

The B Plant chemical sewer stream can also receive feed from 212-B drains; 224-B storage building drains; 276-B floor drains from the inactive organic makeup building; chemical storage tank drains; tank car drains; 225-B chemical sewer and fan cooling water; 271-B AMU chemical drains; and 221-B floor, header, and overflow drains in pipe, electrical, and operating galleries. Weekly samples are collected from a flow-controlled incremental Manning* S-5000 sampler. The stream has a beta monitor, a gamma detector (RE chamber) in the electrical gallery, and a pH monitor.

5.1.4 B Plant Cooling Water to the 216-B-3 Pond

This stream collects cooling water from the 221-B and 225-B Buildings. The two pipelines (15-in. and 24-in.) combine to form the CBC, which discharges to the 207-B retention basins. The effluent has a beta monitor, a gamma monitor, and a flow-proportional sampling system.

5.1.5 B Plant Sanitary Sewers (2607-E3 and 2607-E4)

Sanitary discharges in the 200 East Area is to numerous septic tank/subsurface disposal systems.

5.1.6 French Drains

French drains do not have the potential for a significant release; therefore, no discharge points have been specifically identified.

5.2 GASEOUS EFFLUENTS

Gaseous effluent discharge points are presented in Table 5-2 and are discussed below.

5.2.1 B Plant/Waste Encapsulation Storage Facility Stacks

5.2.1.1 291-B-1 Stack. The main stack at B Plant exhausts filtered air from the B Plant canyon, VVS#1, and the 212-B and 224-B Buildings.

5.2.1.2 296-B-5 Stack. This stack exhausts filtered air from the 221-BB Building, which houses the B Plant process condensate and B Plant steam condensate receiver tanks.

5.2.1.3 296-B-10 Stack. This stack exhausts filtered air from the WESF.

---

*Manning is a Registered Trademark of Manning Technologies, Inc.

Table 5-2. Gaseous Effluent Discharge Points.

Hanford Site effluent point designation	Associated facility and identification of contributing streams	Physical dimensions of discharge point
291-B-1 B Plant Main Stack	221-B main canyon and cells, VVS#1, 212-B cell ventilation, 224-B ventilation exhaust	Height, 61 m (200 ft); dia., 2 m (6.5 ft)
296-B-5 Stack	221-BB	Height, 5 m (16.4 ft); dia., 0.4 m (16 in.)
296-B-10 Stack	225-B WESF main stack	Height, 70 ft; dia., 42 in.
296-B-13 Stack	221-BF	Height, 4 m (13.1 ft); dia., 15.2 cm (6 in.)
296-B-14 Stack	221-B, Section 10	Discharges to the 24-in. cooling water line (below grade)
296-B-21, EF#1	221-B Pipe Gallery East	Height, -2 m (-6.6 ft); dia., 0.6 x 0.9 m (2 ft x 3 ft)
296-B-22, EF#2	221-B Pipe Gallery, Cell 8	Height, -2 m (-6.6 ft); dia., 0.6 x 0.9 m (2 ft x 3 ft)
296-B-23, EF#3	221-B Pipe Gallery, Cells 12-16	Height, -2 m (-6.6 ft); dia., 0.6 x 0.9 m (2 ft x 3 ft)
296-B-24, EF#4	221-B Pipe Gallery, Cells 20-24	Height, -2 m (-6.6 ft); dia; 0.6 x 0.9 m (2 ft x 3 ft)
296-B-25, EF#5	221-B Pipe Gallery, Cell 28	Height, -2 m (-6.6 ft); dia., 0.6 x 0.9 m (2 ft x 3 ft)
296-B-26, EF#6	221-B Pipe Gallery, Cell 32	Height, -2 m (-6.6 ft); dia., 0.6 x 0.9 m (2 ft x 3 ft)
296-B-27, EF#7	221-B Pipe Gallery, Cells 36-40	Height, -2 m (-6.6 ft); dia., 0.6 x 0.9 m (2 ft x 3 ft)
296-B-12	K-3 emergency steam jet	
AMU Tank Vents and Scale Tank Vents	271-B (see Table 4-2)	
211-B Chemical Tank Farm	211-B (see Table 4-2)	

5.2.1.4 296-B-13 Stack. This stack exhausts filtered air from the 221-BF Condensate Effluent Discharge Facility.

5.2.1.5 296-B-14 Stack. This stack exhausts filtered air from the 221-B Building via VVS#2.

5.2.2 Gallery Exhausters

The gallery exhaust air is drawn through prefilter and HEPA filter banks and is discharged to the atmosphere through the seven fan outlets.

5.2.3 Waste Encapsulation Storage Facility Emergency Jet (296-B-12)

Effluents from this jet are drawn through the K-3 filter system and exhausted.

5.2.4 Bulk Chemical Storage Tank Vents

Groups of tanks are directly vented to the atmosphere. There is currently no radiological or nonradiological gaseous monitoring for these tanks.

5.2.5 Aqueous Makeup and Scale Tank Vents (271-B)

The AMU tanks in the 271-B Building are vented to the atmosphere through discharge vents on top of the 221-B Building. No monitors, either radiological or nonradiological, are provided or are necessary. The scale tanks vent through headers out the wall of 221-B.

6.0 EFFLUENT MONITORING/SAMPLING SYSTEM DESIGN CRITERIA

DOE Order 5400.1 states that "effluent monitoring shall comply with applicable regulations and shall be conducted to provide representative measurements of the quantities and concentrations of contaminants in liquid and airborne discharges and solid wastes" (DOE 1988a). This section addresses the monitoring/sampling equipment criteria and the basis utilized for establishing sampling intervals for effluent streams.

6.1 NEW FACILITIES

Currently, B Plant has no new facilities to be evaluated.

6.2 EXISTING FACILITIES

6.2.1 Liquid Effluent Design Criteria

Design criteria for B Plant/WESF liquid effluents is presented in the following.

6.2.1.1 BCS. One radiation monitor, two detectors, and a flow proportional sampler are installed in the 221-BB Building to provide continuous beta and gamma radiation monitoring (see Figures 6-1 and 4-1) and to collect representative samples of the BCS stream per ANSI N42.18 standards (ANSI 1974). Two of the detectors are provided for process control to detect gross gamma radiation and are mounted external (off-line) to the BCS stream. One is located adjacent to the BCS discharge header at a point between the 221-B Building and the 600-gal tank in the 221-BB Building, and the other detector is located adjacent to the 600 condensate receiver tank in the 221-BB Building. The monitor is an on-line beta radiation monitor and is also located in the 221-BB Building. No alpha monitoring is required because any release containing alpha-emitting radionuclides is intimately mixed with a proportionally larger concentration of beta which will then be detected. During periods of BCS production, a stream is continuously pumped from the 600-gal condensate receiver tank and is circulated through the beta monitor. This diverted flow is first cooled to less than 80 °C to prevent damaging the monitor. If high radioactivity is detected by the monitors, the BCS will automatically be diverted to the 216-B-64 Emergency Retention Basin for sampling and proper disposition. The BCS can also be manually diverted.

A flow proportional sampler is also installed in 221-BB Building to collect representative samples from the holding tank. The volume of sample can be varied per unit of flow rate. Currently, a 100-mL sample is pulled by the sampler for every 100-gal of BCS discharged. Routine samples are collected during operations and analyzed for total beta, total alpha, and pH only. The samples are held in a 5-gal tank, agitated, sampled, and then drained back into the system. If the automatic sampler fails, grab samples are taken every shift during operations. The BCS is cooled in 221-BB Building to less than 80 °C, sampled, and then discharged out to the 216-B-55 Crib. Historical data is maintained by Environmental Compliance.

Figure 6-1. B Plant Steam Condensate Sampling and Monitoring System.

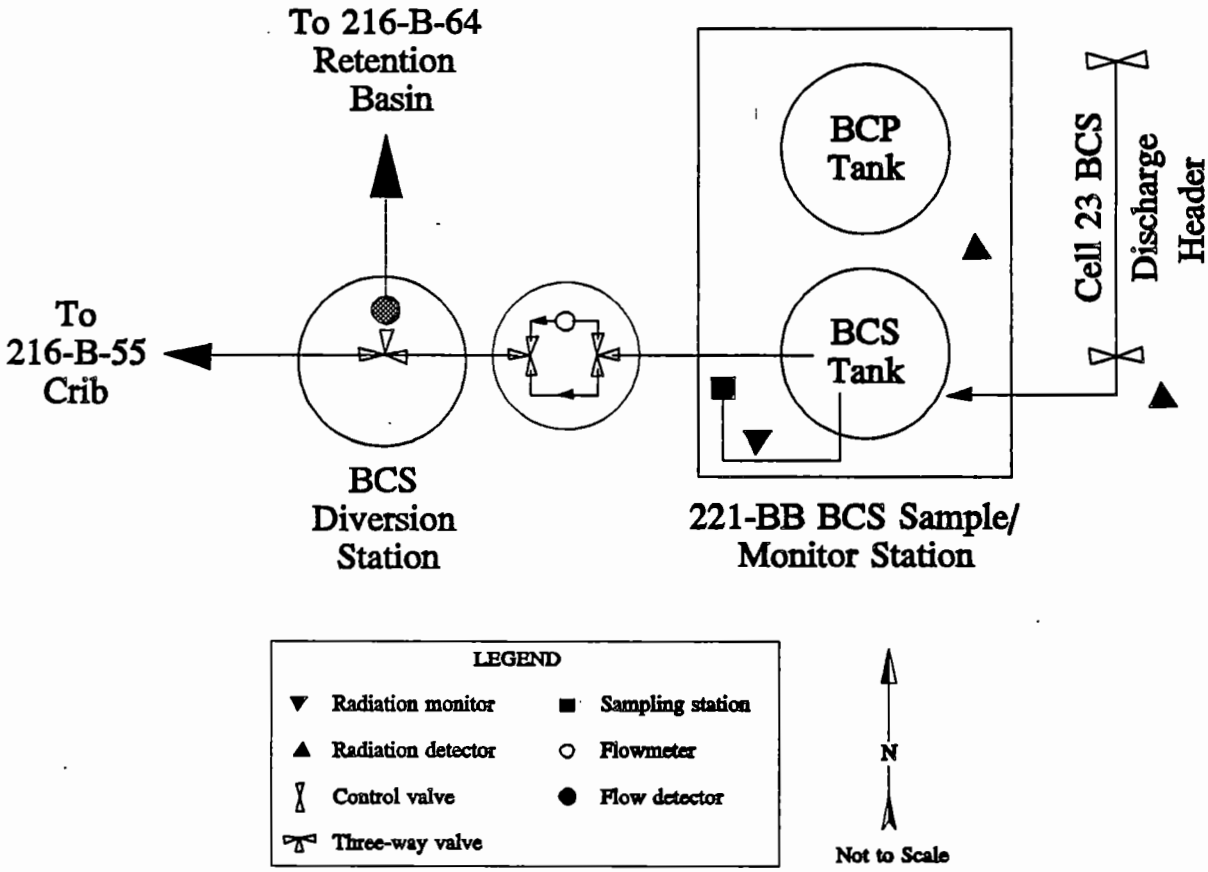

6.2.1.2 BCP. Two gamma radiation monitors are installed in the BCP stream to detect gross radiation and are mounted external to the stream (Figures 6-2 and 4-2). One is located on top of the below grade BCP discharge header at a point between the 221-B Building and the 600-gal tank in 221-BB Building, and the other monitor is adjacent to the 600-gal condensate receiver tank in the 221-BB Building. Both monitors are functionally checked with a known source. These monitors are connected to the FPMCS that, in turn, is occupied by plant operations personnel on an around-the-clock basis.

From the 221-BB, the BCP stream is sent underground to one of two receiver Tanks-TK-A and TK-B-in the 221-BF Building. In the 221-BF Building, the BCP samples are taken from the holding tanks by means of a suction sampler that draws solution from the tank into the sample container. A 500-mL sample is taken for quick turnaround laboratory analysis for radionuclide (^{90}Sr and ^{137}Cs) activity and solution pH. In addition, a second sample is pulled for monthly composite analysis. The second sample volume is based on process throughput and adjusted to ensure that at least 4 L are available to perform the composite analysis. This analysis includes the radionuclide activity level and pH of the composite. Radioactivity analysis includes total alpha, total beta, strontium, and cesium. Tritium (^{3}H), plutonium, and americium are analyzed as appropriate.

The BCP is agitated in the holding tanks in the 221-BF Building to ensure the BCP samples taken for laboratory chemical analysis are representative of the solution in the tank. Batch sampling, analysis, and emptying of one tank occurs as the other is filling. The DOE 5400 series of Orders recognizes the use of batch releases with appropriate sampling and analysis for each batch completed prior to release, in lieu of continuous release of effluent with continuous monitoring (WHC 1988c). If radiation levels exceeding ACLs are detected, the BCP stream is pumped from the 600-gal tank in the 221-BB Building and recycled to Tank TK-24-1. Diversion occurs automatically; however, the BCP can be manually diverted to TK-24-1 if laboratory analyses of samples collected from the tanks in 221-BF indicate the BCP batch cannot be discharged to the 216-B-62 Crib. Based on laboratory analysis of the radionuclide sample, either of the 221-BF Batch Tanks can also be recycled back to TK-24-1. If laboratory analysis shows the BCP is below set ACL discharge limits, the BCP is pumped to the 216-B-62 Crib, located west of the plant. If levels of contaminants are detected to exceed ACL discharge limits during laboratory analyses of the BCP samples taken from the holding tanks in the 221-BF Building, the BCP is pumped back to TK-24-1 for further processing through the waste concentrator.

6.2.1.3 CBC. Sampling of the CBC stream is performed at the 207-BA Building located adjacent to the inlet valve pit at the 207-B Retention Basin (Figure 6-3). The 207-BA Building houses a continuous operating pump, a flow totalizer and flow proportional sampler, pH meter, and associated equipment and instrumentation. The combined stream is sampled continuously on a flow proportional basis [according to DOE Order 5400.5 (DOE 1990b) and ANSI N42.18 (ANSI 1974) standards] prior to entering one of the two 565,000-gal basins. When a preset volume has been measured by the flow totalizer, the sampler is activated and a predetermined sample aliquot is collected into a 5-gal holding tank. The cooling water can be held in either one of two 207-B 500,000-gal

Figure 6-2. B Plant Process Condensate Sampling and Monitoring Locations.

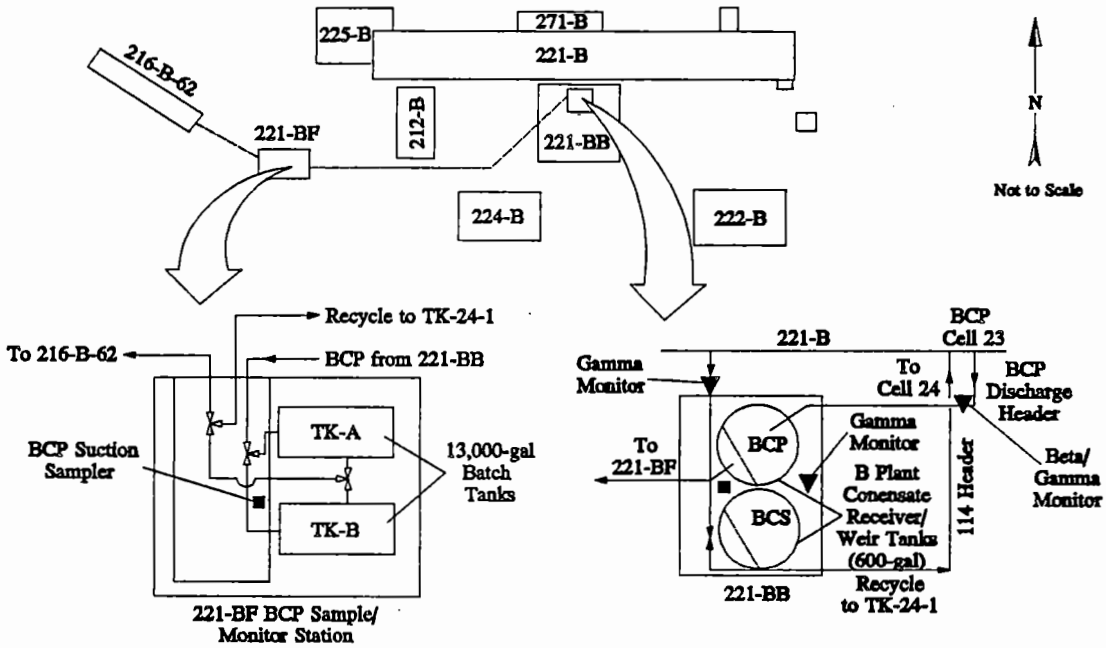

Figure 6-3. B Plant Cooling Water Sampling System.

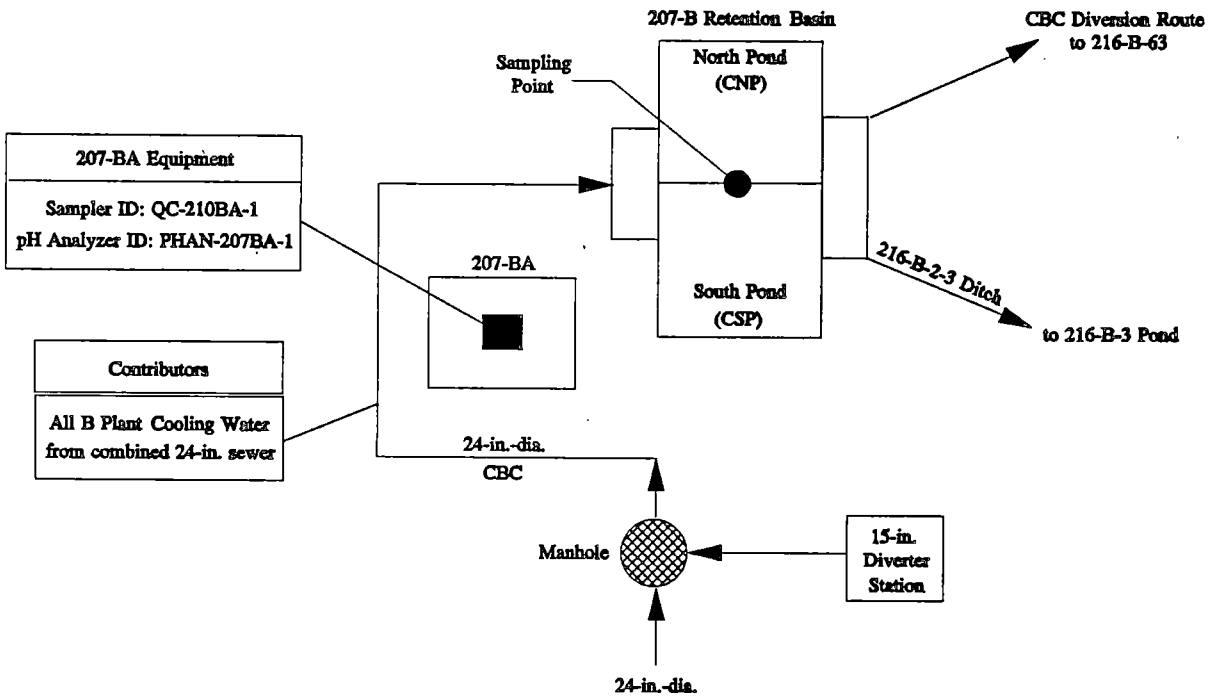

working volume retention basins. If high levels of radioactivity were to reach the basins, the cooling water could be manually diverted to the 216-B-63 ditch. Any liquid diverted into 216-B-63 can contain contributions from both the 15-in. and 24-in. streams. Operating procedures are in place to isolate and locate the source.

Sample aliquots are obtained on a weekly basis from the holding tank in the 207-BA Building for process control and monthly composites. The process control aliquots are analyzed by the 222-S Laboratory for total beta, total alpha and pH. Individual isotopes can be identified if required. The weekly composite aliquots are stored at the 222-S Laboratory. A separate volume of sample is also withdrawn weekly, and samples collected are combined for a monthly composite. The composite sample analysis is then reported as the record sample for the stream. From the available information, the CBC stream is a nonhazardous waste. This designation is made because any hazardous constituents that are in the supply water are expected to be below regulatory concern, which previous sampling has confirmed; and no additions to the CBC stream occur at B Plant.

The 15-in.-dia. Cooling Water Header--The stream is continuously monitored for radiation using separate beta and gamma monitors and is diverted automatically to the 216-B-59 retention basin if found to exceed radiological control limits of DOE/EH 0173T (DOE 1991) and WHC-CM-7-5 (WHC 1988c). Signals from the stream monitors are received in the FPMCS office. Cooling water from the 15-in. line is continuously pumped from the continuously flowing stream through the existing standpipe at the 221-BA station and into the radiation monitors, then back through the standpipe to recombine with the 15-in.-dia. stream.

In addition to the on-line beta and gamma monitors on the 15-in.-dia. line, six subheaders feeding the 15-in. line have individual gamma detectors (see Figures 4-11 through 4-16). Signals from each of these detectors are received by the FPMCS and serve to isolate the source of any CBC upset. The stream is automatically diverted to the 216-B-59 retention basin if high radiation levels are detected.

The 24-in.-dia. Cooling Water Header--The stream is monitored continuously for radioactivity using separate beta and gamma monitors located in the 221-BG Building (see Figure 4-6). Cooling water from the 24-in.-dia. line is continuously pumped from the continuously flowing stream through the existing standpipe and dam at the southeast corner of the 221-B Building and into the 221-BG Building radiation monitors located at Stairwell 1. A diverted portion of the cooling water flows past a gamma and beta monitor and then back through the standpipe to recombine with the 24-in.-dia. stream. Signals from the monitor transmitter are received by the FPMCS. In the event high radiation levels are detected by either the gamma or beta monitor, alarms on the FPMCS are activated; and an automatic diversion valve is energized in the monitor line in the 221-BG Building to collect a sample for laboratory analysis. The lines from these facilities continue northward, combine into a single 24-in.-dia. line north of the 216-B-59 Retention Basin, and discharge into the 207-B Retention Basin.

From the 207-B Retention Basin facility, the water is discharged eastward to the 216-B-2-3 and then the 216-B-3-3 Ditch leading to B Pond, while water

exceeding requirements could be diverted to the 216-B-63 Trench or otherwise returned to B Plant.

6.2.1.4 BCE. The BCE stream is monitored for radioactive contamination by gamma and beta monitors. The gamma radiation monitor is located adjacent to the 6-in. chemical sewer header in the B Plant electrical gallery, which upon detection of gross gamma activity, automatically diverts the contents of the 6-in. header to Tank TK-10-1. The in-line system is capable of monitoring down to 3.0×10^{-5} μCi/mL for ^{90}Sr and 5.0×10^{-4} μCi/mL for ^{137}Cs (WHC 1990a). The radiation detection limit is set to 2 mR/h. The gamma monitor is for process control and does not detect at ACLs, nor is it intended as a release monitor. The monitor is functionally tested for operability. The beta monitor detection range is 3.0×10^{-7} μCi/mL to 6.0×10^{-6} μCi/mL, with the pH bracketed at alarm points between 4–10.

A discharge monitoring system is installed in the 2904-EA Building to provide on-line beta radiation and pH monitoring for the BCE discharge stream. The 2904-EA Building is located 500 ft north of the 221-B Building near the B Plant railroad tracks.

The chemical sewer is sampled via a flow proportional sampler, per ANSI N42.18 standards (ANSI 1974), located at the flow measurement weir adjacent to the 216-B-63 Ditch. A flow proportional sample is taken and deposited into a holding tank. Each week, a predetermined volume of sample is obtained for laboratory analysis; and the remainder of the volume collected in the holding tank is drained back to the chemical sewer.

6.2.2 Gaseous Effluent Design Criteria

Design criteria for B Plant/WESF gaseous effluents is presented in the following. All of the CAMs utilized in the stacks are Eberline AMS-3 monitors. They have a rated efficiency of 50% for ^{90}Sr/^{90}Y and a count rate range of 10 to 100,000 cpm. Gamma response is approximately 200 cpm/mR/h of ^{60}Co. All filter particulate samples are collected on 47 mm filter paper at a flowrate of 2.0 ± 0.2 ft^3/min. Samples are analyzed weekly and are measured by analytical methods.

6.2.2.1 291-B-1 System. Radionuclides are the primary emissions of concern from the B Plant main stack. The B Plant main stack 291-B-1 sampling and monitoring system is diagrammed in Figure 6-4. A flowrate sensing element installed in the main stack air stream measures the air flow with an accuracy of ±10% of span. An electrical signal proportional to the stack flow is transmitted to the 271-B Building dispatcher's office. Sensing probes are positioned at approximately 50 ft in elevation. Sampling and monitoring probes have been designed for multinozzle isokinetic sampling per ANSI N13.1 standards (ANSI 1969). The design was based on the average stack velocity, which was determined from velocity profile measurements.

The monitoring/sampling system consist of a primary and backup record sampler containing 47 filter paper and a CAM. The filter paper from the primary record sampler is changed on a weekly basis (each Friday) and is composited and analyzed monthly for gross alpha and gross beta. The CAM local ratemeter is checked each shift, and the CAM filter is changed weekly. Alarms for CAM malfunction or low sample flowrates are annunciated both locally and

Figure 6-4. B Plant Main Stack 292-B Building Sampling/Monitoring System.

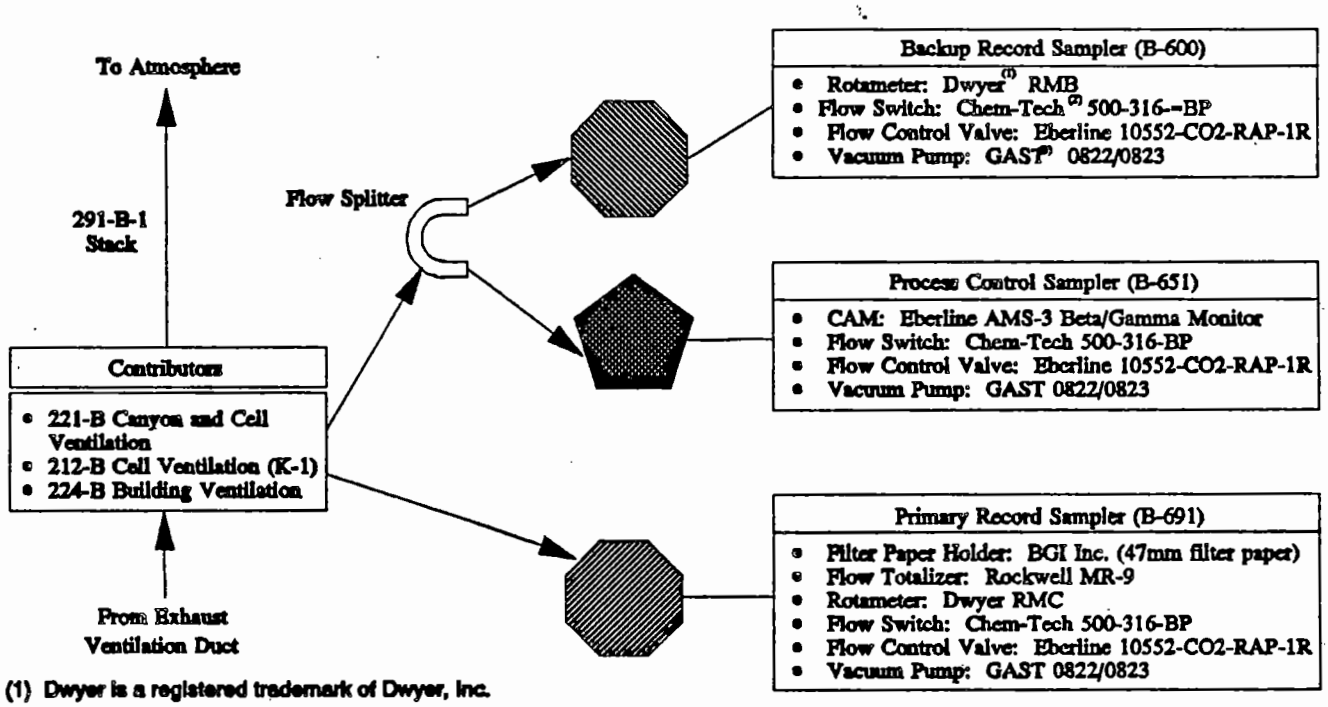

(1) Dwyer is a registered trademark of Dwyer, Inc.
(2) Chem-Tech is a registered trademark of Chem-Tech Equipment, Inc.
(3) GAST is a registered trademark of GAST Manufacturing Corp.

in the dispatcher's office. A flow switch will disrupt power to the record sample pump when stack air flow stops and will restore power when flow is detected.

The HEPA filtration reduces the concern about emission of particulates, asbestos, and the accompanying visual effluent opacities. Sources of nitrogen oxides constitute the only nonradiological emissions of potential concerned in the past. The nitrogen oxide emission concentration is estimated to be less than 5.0 ppm (RHO 1986). Therefore, there is no nonradiological monitoring of 291-B-1 Stack effluents.

6.2.2.2 291-B-5 System. Radionuclides are the primary emissions of concern from the B Plant 296-B-5 Stack. The sampling/monitoring system is shown in Figure 6-5.

The sampling and monitoring system for the 296-B-5 Stack is based on a design developed for site-wide application to airborne effluents associated with 200 Area facilities. This system includes two probes for isokinetic withdrawal, short transport lines with smooth, large-radius bends, a record sampler, and a beta/gamma CAM. The probes are installed to withdraw representative air samples of the stack effluent.

The record sampling system B-686 (historical sample) will operate continuously whenever, and only if, air is exhausted from the stack. The CAM system-B-700-(process control sample)-will operate continuously under all circumstances. Filter paper from the record sampling system is collected weekly (each Friday) and analyzed on a monthly basis. The CAM filter is also changed weekly. A flow switch will disrupt power to the record sample pump when stack air flow stops and will restore power when flow is detected.

No sources of concern from a nonradiological standpoint have been identified in 296-B-5 Stack emissions, and no nonradiological monitoring is conducted.

6.2.2.3 296-B-10. Radionuclides are the primary emissions of concern from the B Plant 296-B-10 Stack.

The sampling and monitoring system for the 296-B-10 Stack is based on a design developed for site-wide application to airborne effluents associated with 200 Area facilities (see Figure 6-6). A flow rate element, installed in the main stack airstream, measures the air flow. An electrical signal, proportional to the stack flow, is transmitted to instruments in the supervisory panel in the WESF operating gallery. Isokinetic air extraction probes are positioned in the stack. The probes are installed to withdraw representative air samples from the stack airstream per ANSI N13.1 (ANSI 1969). The record sampling system-B-748 (historical sample) will operate continuously when air is being exhausted from the stack. The beta/gamma CAM system B-822 (process control sample) will operate continuously under all circumstances. A low air flow rate will activate an alarm locally and in the supervisor's office. Filter paper from the record sampling system is collected weekly (each Friday) and analyzed on a monthly basis. The beta/gamma CAM filter is also changed weekly.

No nonradiological monitoring is conducted on the 296-B-10 Stack.

Figure 6-5. 296-B-5 Stack 221-BB Building Sampling/Monitoring System.

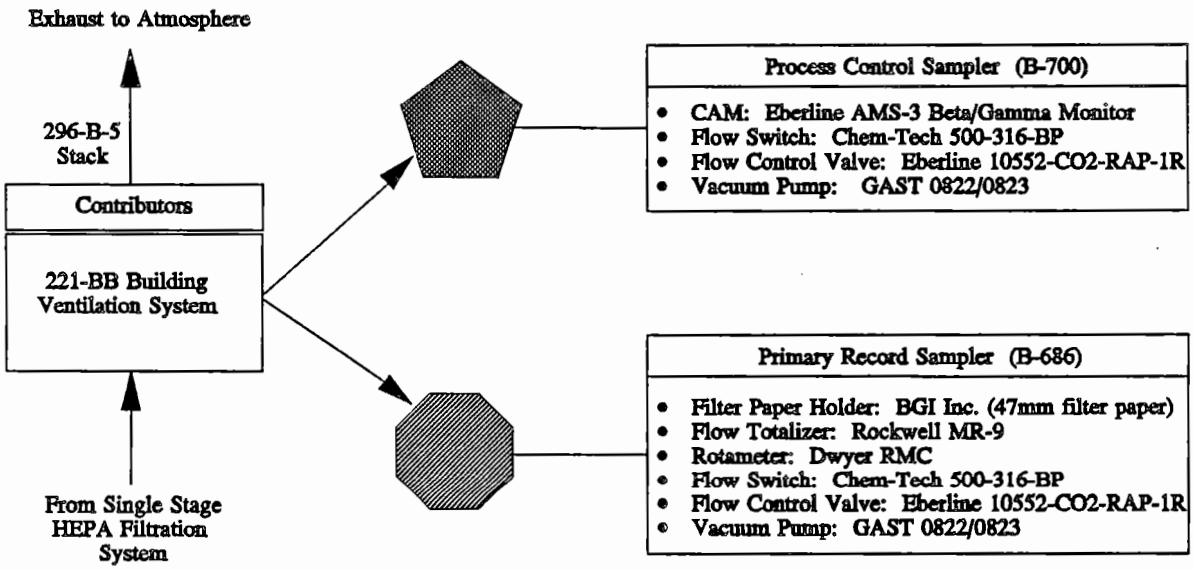

Figure 6-6. 296-B-10 Stack 225-B Building Sampling/Monitoring System.

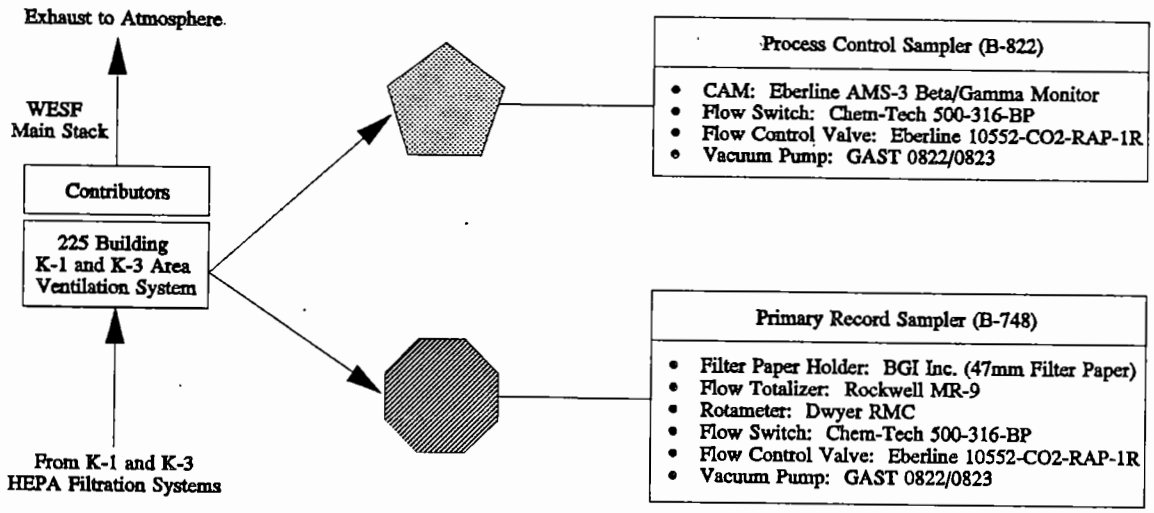

6.2.2.4 296-B-13. Radionuclides are the primary emissions of concern from the 296-B-13 Stack. Filter paper from the record sampling system is collected weekly (each Friday).

The sampling and monitoring system for the 296-B-13 Stack is based on a design developed for site-wide application to airborne effluents associated with 200 Area facilities (see Figure 6-7). A flow rate element, installed in the main stack airstream, measures the air flow. An electrical signal, proportional to the stack flow, is transmitted to instruments in the 271-B dispatcher's office. Two separate isokinetic air extraction probes are positioned in the stack. The probes are installed to withdraw representative air samples from the stack airstream per ANSI N13.1 Standards. The record sampling system B-690 (historical sample) will operate continuously whenever, and only if, air is being exhausted from the stack. The beta/gamma CAM system B-693 (process control sample) will operate continuously under all circumstances. The single CAM filter is changed weekly during operation. A flow switch will disrupt power to the record sample pump when stack air flow stops and will restore power when flow is detected.

No sources of concern from a nonradiological standpoint have been identified in the 296-B-13 Stack, and nonradiological monitoring is not conducted.

6.2.2.5 296-B-14. The offgas is sampled in the VVS#2 pit near its point of release to the cooling water. The sample flow is routed to primary record sampler B-698 which is based on a design developed for site-wide application to airborne effluents associated with 200 Area facilities, and a process control sampler B-678 (see Figure 6-8). The radionuclides in the sample stream are collected upon filter paper and analyzed for total beta and alpha emitters. The process control sampler, is currently being upgraded to be consistent with the other four B Plant and WESF stacks.

6.2.2.6 Gallery Exhausters 296-B-21 through 296-B-27. The gallery exhaust points are not sampled and monitored, although the ambient air in the galleries is routinely sampled and monitored at multiple points for personnel protection. The CAM units serving the B Plant pipe, electrical, and operating galleries are remotely alarmed in the dispatcher's office. Contamination surveys of the galleries are performed routinely by Radiation Protection personnel. Procedures are in place to initiate high-volume air sampling at the exhaust point closest to the gas air sampling at the exhaust point gallery affected in the event of a contamination upset in the galleries.

6.2.2.8 211-B Tank Farm. No sampling or monitoring of nonradioactive hazardous waste effluent is provided although the tanks are vented to the atmosphere.

6.2.2.9 AMU and Scale Tank Vents. No nonradiological monitoring is provided or needed for the AMU and scale tank vents.

Figure 6-7. 296-B-13 Stack 221-BB Building Sampling/Monitoring System.

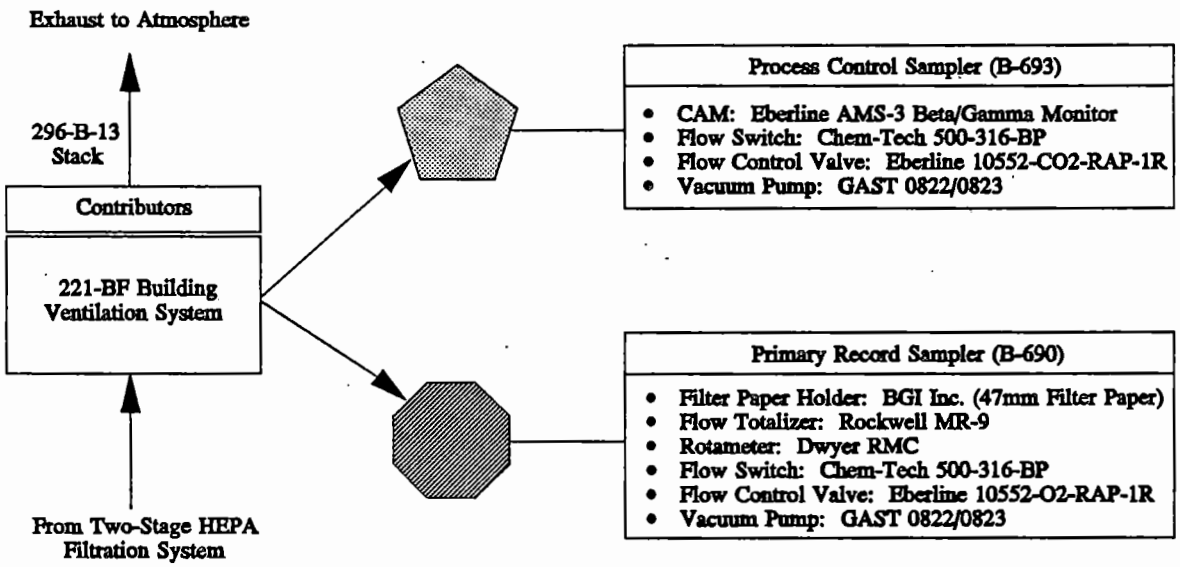

Figure 6-8. 296-B-14 Gaseous Effluent Sampling/Monitoring System.

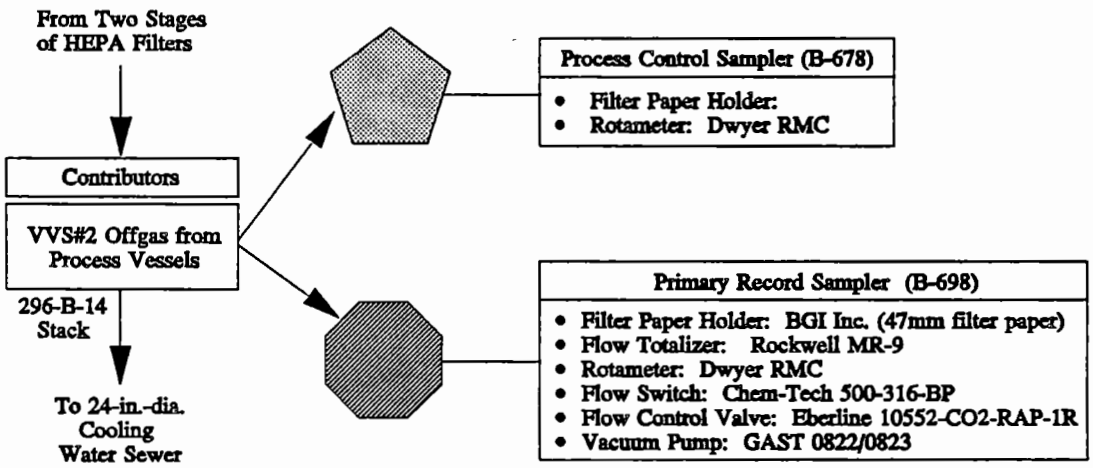

7.0 CHARACTERIZATION OF THE CURRENT EFFLUENT MONITORING SYSTEM

This section provides a description of the effluent monitoring system (EMS) and technical specifications related to the effluent monitoring/sampling systems.

7.1 INSTRUMENTATION DESCRIPTION

The ability to detect, quantify, and adequately respond to unplanned releases of radioactive material from B Plant to the environment relies upon in-place effluent sampling and monitoring systems. These sampling/monitoring systems are based on designs developed for site-wide application to effluents associated with the 200 Area facilities to determine whether effluent releases of radioactive material are within the DCGs specified in DOE Order 5400.5 (DOE 1988a). Tables 7-1 through 7-9 provide a list of instrumentation, operating ranges, alarm setpoints, and comparative regulatory limits.

Each sampling/monitoring system allows for the collection of a record (historical) sample and a process control sample. Each of these monitors, with the exception of the WESF stack, are connected with the FPMCS located in the 271-B Building dispatcher's office, which is occupied by plant operations personnel on an around-the-clock basis. The WESF stack ties to the panels in the WESF operating gallery and shift office. During operations of the low-level waste concentration system, the radiation monitors automatically divert their respective stream if the alarm setpoint for diversion is exceeded. Descriptions of the instrumentation, including effluent streams, types of instrumentation, physical locations, and performance specifications are given in Sections 4.0 and 6.0.

Calibration, maintenance, and testing procedures for the monitoring, diversion, and sampling systems are described in full in the Westinghouse Hanford 200 Area Support Services Manual, Section 201, *"Index of Calibration Procedures"* (WHC 1988a). System calibration for continuous monitoring and sampling systems are conducted at least on an annual basis and recalibrated any time it is subject to maintenance or modifications that may affect equipment performance. Sampling and monitoring systems are routinely checked with known sources to determine that they function properly. The frequency of maintenance and calibration for these systems is also included in the Westinghouse Hanford *200 Area Support Services Manual*.

7.2 TECHNICAL SPECIFICATIONS PERTAINING TO EFFLUENT MONITORING SYSTEM

7.2.1 Liquid Effluents

7.2.1.1 BCS. During operation of the low-level waste concentration system, the on-line beta radiation monitor, located in the 221-BB Building, will automatically divert the BCS stream from the normal 216-B-55 Crib discharge

location to the 216-B-64 Emergency Retention Basin if the alarm setpoint for diversion is exceeded. The E-23-3 Concentrator operation may also be shut down to stop flow.

7.2.1.2 BCP. Two gamma radiation monitors are installed in the 221-BB Building to detect gross gamma radiation for the BCP stream and are connected to the FPMCS. If high levels of radiation are detected, the BCP stream is pumped from the 600-gal tank in the 221-BB Building and recycled to Tank TK-24-1. If out-of-tolerance levels of contaminants are detected in the laboratory analyses of the BCP samples taken from the holding tank in the 221-BF Building, the BCP is also pumped back to TK-24-1 for further processing through the waste concentrator. The BCP effluent may also be stopped by shutdown of the E-23-3 concentrator.

7.2.1.3 BCE. Upon detection of gross gamma radionuclides greater than control limits, the process control gamma radiation monitor, located adjacent to the 6-in. chemical sewer header in the B Plant electrical gallery, automatically diverts the contents of the 6-in. header to Tank TK-10-1. Alarms located in 2904-EA are tied into the FPMCS and identify the following conditions:

- High radiation
- System trouble (i.e., no flow, power failure, detector failure)
- High or low pH
- Sampling system failure.

Procedures for corrective action during upset conditions are included in WHC-CM-8-2 (WHC 1988a).

7.2.1.4 CBC. Monitoring and sampling instrumentation for the CBC follows.

24-in.-dia. Cooling Water Header--Instrumentation for the monitoring and sampling of the low-risk cooling water header is located in the 221-BG Building and monitored continuously by the FPMCS. In the event that radiation is detected by either the gamma or beta monitor, alarms on the FPMCS are activated; and an automatic diversion valve is energized in the monitor line in the 221-BG Building to collect a sample for laboratory analysis.

15-in.-dia. Cooling Water Header--An event sampler and on-line beta and gamma radiation monitors are located in the 221-BA Building and are continuously monitored by the FPMCS. In the event that high levels of radiation are detected by either the beta or gamma monitor, alarms on the FPMCS are activated; and an automatic diversion valve is activated in the 221-BA monitor line to collect a sample for laboratory analysis. In addition, when radiation is detected, the entire contents of the 15-in. line are diverted to the 216-B-59 Retention Basin.

Combined Cooling Water--Flow proportional composite sampling of the CBC stream, in accordance with DOE/EH 0173T, is performed at the 207-BA Building. When a preset volume has been measured by the flow totalizer, the sampler is activated, and a predetermined sample volume is collected.

If high levels of radioactivity were to reach the basins, the combined cooling water could be manually diverted/valved to the 216-B-63 Ditch (see Table 7-4).

7.2.1.5 Sanitary Sewers. No sampling or monitoring is performed on these systems.

7.2.1.6 French Drains. No sampling or monitoring is performed on these systems.

7.2.2 Gaseous Effluents

7.2.2.1 291-B-1. Equipment failure, leakage of process solutions, and remote maintenance operations contribute to the quantity of radioactive contaminants in the canyon and cells. These contaminants are subject to dispersion in the ventilated air. Air flowrate in the stack is sensed, regulated, indicated, and totalized in the 292-B Building. A low sample air flowrate will activate an alarm switch that initiates local alarms and remote alarm indicators located in the 271-B dispatcher's office. The sample system also provides for alarm to high airborne radioactivity and system failure. A flowrate sensing element installed in the main stack air stream measures then air flow with an accuracy of ±10% of span. An electrical signal proportional to the stack flow is transmitted to the 271-B Building dispatcher's office. Sensing probes are positioned at approximately 50 ft in elevation. Sampling and monitoring probes have been designed for multinozzle isokinetic sampling per ANSI N13.1 Standards (ANSI 1969). The design was based on the average stack velocity, which was determined from velocity profile measurements.

As a backup, the "D" Filter exhaust plenum is equipped with a CAM, which provides an additional method to evaluate filter performance in the event of an upset indicated by the stack CAM or record sampler. The sampler consists of three vertical probes, each having seven ⅛-in.-dia. Schedule-80, stainless steel nozzles. The three probes are spaced at equal distances across the rectangular plenum and are routed via a short transport line to the CAM inside the 291-BF Building. The system is not isokinetic, but the multiple nozzles (21 total) are considered sufficient as a process control aid to adequately cover the entire duct cross section.

Additionally, the three CAMs that monitor ambient air concentrations in the canyon will provide indication of any major increase in the source term to the stack effluent. These CAMs are physically located in the 221-B Operating Gallery and pull air remotely from the canyon.

The 291-B Sand Filter is maintained in standby status for use during HEPA filter "D" upset conditions. An emergency steam-driven turbine exhaust blower is available for the canyon ventilation system. The automated reporting system for laboratory analysis of the 291-B-1 Stack CAM and record samples includes the capability for graphic trend indication. This capability provides recognition of system deterioration, which could result in increased

provides recognition of system deterioration, which could result in increased release concentrations. The 291-B-1 filtration systems also provide a backup in the event of treatment system failure in VVS#1.

7.2.2.2 **296-B-5.** The CAM stack monitor process control sampler, located in the 296-B-5 monitor cabinet, operates continuously. If high radioactivity alarms are indicated to the FPMCS, operational personnel could disrupt low-level waste concentration activities until the upset condition has been determined and resolved. The sample system also provides for alarm to high airborne radioactivity, high temperature in the stack monitoring cabinet, and system failure.

7.2.2.3 **296-B-10.** Emergency power is available to both of the K-1 HVAC system exhaust fans. A low flow sample rate in the 296-B-10 Stack will activate a local alarm and a remote alarm in the WESF operating gallery and WESF shift office. The sample system also provides for alarms to high airborne radioactivity, high temperature in the stack monitoring cabinet, and system failure. Procedures for corrective action during K-1 upset operating conditions are included in WHC-CM-8-2 (WHC 1988a).

7.2.2.4 **296-B-13.** The CAM stack monitor process control sampler, located in the 296-B-13 monitor cabinet, operates continuously. If high radioactivity is indicated to the FPMCS, operational personnel could suspend low-level waste concentrator activities until the upset condition has been determined and resolved. The sample system also provides for alarms to high airborne radioactivity, high temperature in the stack monitoring cabinet, and system failure.

7.2.2.5 **296-B-14.** Shutdown of the VVS#2 discharge is readily accomplished in the event of a failure in the treatment system. (VVS#2 is required to support continued processing, but removing it from service does not cause an immediate hazard to personnel or equipment.) The cooling water monitoring and automatic diversion systems are in place in the event of detected high level of radionuclides.

7.2.2.6 **Gallery Exhausters.** Procedures are in place to initiate high-volume air sampling, using a portable air sampler, at the exhaust point closest to the gas air sampling at the exhaust point gallery affected in the event of a contamination upset in the galleries. If warranted by upset conditions, the flow through the gallery exhaust points 296-B-21 through 296-B-27 can be reduced, and air flows can be routed through the crane cab access doorways to the canyon (291-B-1 vent system).

7.2.2.7 **WESF Emergency Steam Jet (296-B-12).** The K-3 HVAC system has an emergency steam jet to provide vacuum for the system in case of exhaust fan failure. The K-3 emergency exhaust jet activates when the K-3 exhaust duct pressure becomes less negative than -5.5 in. H_2O. Procedures for corrective action during K-3 upset operating conditions are included in WHC-CM-8-2 (WHC 1988a).

7.2.2.8 **211-B Tank Farm.** Under normal operating conditions, no environmental or personal hazard is anticipated from the 211-B Tank Farm facility (RHO 1986). Similarly, no problems are expected during internal B Plant upset conditions.

7.2.2.9 AMU and Scale Tanks. None of the chemicals used in the AMU are radioactive. There is no potential for radioactive release, and radiological sampling and monitoring are not provided.

7.3 ALTERNATIVE MONITORING AND ASSESSMENT METHODS

Currently, there are no alternative monitoring and assessment methods to 40 CFR Part 61, Appendix D, that have been given prior EPA approval (EPA 1989c).

Table 7-1. Liquid Effluent Monitoring Instrument - B Plant Process Condensate.

Component	Manufacturer/ Model	Specifications/operating ranges	Alarm setting	Regulatory limits
Process Control Monitor located on top of the below-grade BCP discharge header at a point between the 221-B Building and the BCP receiver tank in the 221-B Building.				
Off-line gamma monitor	Nuclear Measurement Corporation/ TC-526	Scintillation detector; 0.25 cps full-scale; detection range: 0-1 x 10^8 cps	300 counts/1,000 sec; 8 x 10^{-5} µCi/mL ^{90}Sr; 3 x 10^{-3} µCi/mL ^{137}Cs	2.0 x 10^{-5} µCi/mL ^{90}Sr; 3.0 x 10^{-5} µCi/mL ^{137}Cs
Process Control Monitor located adjacent to the 600-gal BCP receiver tank in the 221-BB Building.				
Off-line gamma monitor	Nuclear Measurement Corporation/ TC-526	Scintillation detector; 0.25 cps full-scale; detection range: 0 - 1 x 10^8 cps	300 counts/1,000 sec; 8 x 10^{-5} µCi/mL ^{90}Sr; 3 x 10^{-3} µCi/mL ^{137}Cs	2.0 x 10^{-5} µCi/mL ^{90}Sr 3.0 x 10^{-5} µCi/mL ^{137}Cs
Sampling System located in the 221-BF Building.				
Flow proportional sampler	Manning Environmental Stationary Composite Sampler/S-5000	Stream temperature: 68-100 °F; adjustable sample volume: 50-1000 mL; auto shutdown at full 5-gal container	Batch mode	
Flow totalizer	Marsh McBirney*/250	Range: 0.5-in. to 60-in. H_2O depth; 1,000 gal/count; temperature range: 30 °F to 112 °F (-1 °C to +40 (°C)		

*Marsh McBirney is a Registered Trademark of Marsh McBirney, Inc.

Table 7-2. Liquid Effluent Monitoring Instrumentation - B Plant Steam Condensate.

Component	Manufacturer/ Model	Specifications/operating ranges	Alarm setting	Regulatory limits
Process Control Monitor located adjacent to the BCS header at a point between the 221-B Building and the BCS tank in the 221-BB Building.				
Off-line gamma monitor	Nuclear Measurement Corporation/ TC-526	Scintillation detector; 0.25 cps full-scale; detection range: 0-1 x 10^{8} cps	300 counts/1,000 sec; 8 x 10^{-5} µCi/mL ^{90}Sr; 3 x 10^{-3} µCi/mL ^{137}Cs	2.0 x 10^{-5} µCi/mL ^{90}Sr; 3.0 x 10^{-5} µCi/mL ^{137}Cs
Process Control Monitor located adjacent to the 600-gal BCS receiver tank in the 221-BB Building.				
Off-line gamma monitor	Nuclear Measurement Corporation/ TC-526	Scintillation detector; 0.25 cps full-scale; detection range: 0 - 1 x 10^{8} cps	300 counts/1,000 sec; 8 x 10^{-5} µCi/mL ^{90}Sr; 3 x 10^{-3} µCi/mL ^{137}Cs	2.0 x 10^{-5} µCi/mL ^{90}Sr 3.0 x 10^{-5} µCi/mL ^{137}Cs
Primary Environmental Monitor located in the 221-BB Building.				
On-line beta monitor	Nuclear Measurement Corporation/ TC-526S	NaI crystal; detection range: 0 - 1 x 10^{-8} cps	300 counts/1,000 sec; 8 x 10^{-5} µCi/mL ^{90}Sr; 3 x 10^{-3} µCi/mL ^{137}Cs	2.0 x 10^{-5} µCi/mL ^{90}Sr; 3.0 x 10^{-5} µCi/mL ^{137}Cs
Sampling System located in the 221-BB Building.				
Flow proportional sampler	Manning Environmental Stationary Composite Sampler/S-5000	Stream temperature: 68-100 °F; adjustable sample volume: 50-1000 mL; auto shutdown at full 5-gal container	80-mL sampler at 100-gal intervals	
Flow meter	Vortex			

Table 7-3. Liquid Effluent Monitoring Instrumentation - B Plant Chemical Sewer.

Component	Manufacturer/ Model	Specifications/operating ranges	Alarm setting	Regulatory limits
Process Control Monitor located adjacent to the 6-in.-dia. chemical sewer header in the 221-B Electrical Gallery.				
Gamma monitor off-line	Nuclear Measurement Corporation/ TC-526	Scintillation detector; 2.5 cps full-scale; detection range: 0-1 x 10^{7} cps	5 x 10^{-5} µCi/mL ^{137}Cs	2.0 x 10^{-5} µCi/mL ^{90}Sr; 3.0 x 10^{-5} µCi/mL ^{137}Cs
Primary Environmental Monitor located in the 2904-EA Building.				
Beta monitor RE-2904EA-1	Nuclear Measurement Corporation/ TC-526S	Scintillation detector; 0.25 cps full-scale; detection range: 0 - 1 x 10^{-8} cps	5 x 10^{-5} µCi/mL ^{137}Cs	2.0 x 10^{-5} µCi/mL ^{90}Sr; 3.0 x 10^{-5} µCi/mL ^{137}Cs
pH analyzer pHAN-2904EA-1	Leeds & Northrup	Range: 0-14; automatic temperature compensation	4.0 > pH > 10	2.0 ≤ pH ≤ 12.5
Located in the Shack at the 216-B-63 Flow Measurement Weir.				
Flow proportional sampler	Manning Environmental Stationary Composite Sampler/S-5000	Stream temperature: 68-100 °F; system failure alarm contact; adjustable sample volume: 50-1000 mL; mixer to keep effluent in suspension; auto shutdown at full 5-gal container	30 mL of sample every 6 min. to holding tank	
Flow totalizer	Inventron/9410	60° V-notch weir programmable open channel flow meter; 32 KHz; range: 0-99,999 gal/min.		

Table 7-4. Liquid Effluent Monitoring Instrumentation - B Plant Cooling Water. (2 sheets)

Component	Manufacturer/ Model	Specifications/operating ranges	Alarm setting	Regulatory limits
For 24-in.-dia. Low-Risk Cooling Water Header located in the 221-BG Building.				
On-line beta monitor CRM-221BG-2	Nuclear Measurement Corporation/ TC-526S	Scintillation detector; 2.5 cps full-scale; detection range: 0-1 x 10^7 cps	5 x 10^{-5} µCi/mL ^{137}Cs	2.0 x 10^{-5} µCi/mL ^{90}Sr; 3.0 x 10^{-5} µCi/mL ^{137}Cs
On-line gamma monitor CRM-221BG-1	Nuclear Measurement Corporation/ TC-526	Scintillation detector; 2.5 cps full-scale; detection range: 0 - 1 x 10^7 cps	3 x 10^{-3} µCi/mL	2.0 x 10^{-5} µCi/mL ^{90}Sr; 3.0 x 10^{-5} µCi/mL ^{137}Cs
Event sampler	Manning Environmental Stationary Composite Sampler/S-5000	Stream temperature; 68-100 °F; system failure alarm contact; adjustable sample volume: 50-1,000 mL; mixer to keep effluent in suspension; auto shutdown at full 5-gal container	100-mL sample at 100-gal intervals	
For 15-in.-dia. High-Risk Cooling Water Header located in the 221-BA Building.				
On-line beta monitor CRM-221BA-2	Nuclear Measurement Corporation/ TC-526S	Scintillation detector; 0.25 cps full-scale; detection range: 0 - 1 x 10^{-8} cps	5 x 10^{-5} µCi/mL ^{137}Cs	2.0 x 10^{-5} µCi/mL ^{90}Sr; 3.0 x 10^{-5} µCi/mL ^{137}Cs
On-line gamma monitor CRM-221BA-1	Nuclear Measurement Corporation/ TC-526	Scintillation detector; 2.5 cps full-scale; detection range: 0 - 1 x 10^8 cps	3 x 10^{-3} µCi/mL	2.0 x 10^{-5} µCi/mL ^{90}Sr 3.0 x 10^{-5} µCi/mL ^{137}Cs
Event sampler	Manning Environmental Stationary Composite Sampler/S-5000	Stream temperature: 68-100 °F; system failure alarm contact; adjustable sample volume; 50-1,000 mL;mixer to keep effluent in suspension; auto shutdown at full 5-gal container	100-mL sampler at 100-gal intervals	

Table 7-4. Liquid Effluent Monitoring Instrumentation - B Plant Cooling Water. (2 sheets)

Component	Manufacturer/ Model	Specifications/operating ranges	Alarm setting	Regulatory limits
Sampling System for the 24-in.-dia. Combined Cooling Water Sewer located in the 207-BA Building.				
Flow proportional sampler	Baldor[1] pump and sampler system	Stream temperature: 68-100 °F; system failure alarm contact; adjustable sample volume: 50-1000 mL; mixer to keep effluent in suspension; auto shutdown at full 5-gal container	100-mL sample at 100-gal intervals	
pH analyzer pHAN-207BA-1	UNILOG[2]/320B -05-70-12-51	Range: 0-14; automatic temperature compensation	6 > pH > 10	2 ≤ pH ≤ 12.5
Flow totalizer EF-207BA-1	Kent/Clearspan[3] Model P105M	7-day chart recorder		
Flow meter	Marsh-McBirney Model 251	Submerged differential pressure transducer for level measurement and electromagnetic capacitance for velocity measurement.		

[1]Baldor is a Registered Trademark of the Baldor Electric Company.

[2]UNILOG is a Registered Trademark of Rosemont, Inc.

[3]Kent/Clearspan is a Registered Trademark of Kent Process Control, Inc.

Table 7-5. Gaseous Effluent Monitoring Instrumentation - 291-B-1.

Component	Manufacturer/Model	Specifications/operating ranges
Primary Record Sampler in the 292-B Building (B-691)		
Record filter paper holder	BGI Incorporated	47 mm filter paper (Gelman Sciences); sample probes: 6 isokinetic tubes located 50 ft from base of stack at 6 ft 5 in. (ID) cross-section
Flow totalizer	Rockwell/MR-9	8.92 m^3/h at 5 psi; temperature compensated at 60 °F
Flowmeter	Dwyer/RMC	Pressure rating: 35 psi; temperature rating: to 130 °F; accuracy: 2% of full scale; maintained at 3.0 cfm
Flow switch	Chem-Tec 500-316-BP	Maximum pressure: 0.2 scf/min to 35 scf/min at 15 psi, 45 scf/min at 60 psi; sample probes: 2 isokinetic tubes located at 50 ft from base of stack at 6 ft 5 in. (ID) cross-section
Flow control valve	Eberline/10552-CO2-RAP-1R	
Vacuum pump	Gast/0822 or 0823	Oilless, 1/2 H.P. rating; capacity: 7.2 cfm at 0" Hg and 1,725 rpm
Backup Record Sampler in the 292-B Building (B-600)		
Flowmeter	Dwyer/RMC	Pressure rating: 35 psi; temperature rating: to 130 °F; accuracy: 2% of full scale; maintained at 2.0 cfm
Flow switch	Chem-Tec/500-316-BP	Maximum pressure: 0.2 scf/min to 35 scf/min at 15 psi, 45 scf/min at 60 psi; sample probes: 2 isokinetic tubes located 50 ft from base of stack at 6 ft 5 in. (ID) cross-section
Flow control valve	Eberline/10552-CO2-RAP-1R	
Vacuum pump	Gast/0822 or 0823	Oilless, 1/2 H.P. rating; capacity: 7.2 cfm at 0" Hg and 1,725 rpm
Process Control Sampler in the 292-B Building (B-651)		
Continuous air monitor	Eberline/AMS-3 Beta-Gamma	Detector: a pancake G-M tube that is 1-3/4 in. in diameter with a 1.4-2.0 mg/cm^2 mica window; scale: logarithmic; range: 10-100K cpm; airflow meter: 10-100 L/min maintained at 2 cfm; temperature range: 20 °F to 120 °F (-7 °C to 49 °C); sample probes: 6 isokinetic tubes located 50 ft from base of stack at 6 ft 5 in. (ID) cross-section
Flow switch	Chem-Tec/500-316-BP	Maximum pressure: 0.2 scf/min to 35 scf/min at 15 psi, 45 scf/min at 60 psi; sample probes: 2 isokinetic tubes located 50 ft from base of stack at 6 ft 5 in. (ID) cross-section
Flow control valve	Eberline/10552-CO2-RAP-1R	
Vacuum pump	Gast/0822 or 0823	Oilless; 1/2 H.P. rating; capacity: 7.2 cfm at 0" Hg and 1,725 rpm

Table 7-6. Gaseous Effluent Monitoring Instrumentation - 291-B-5.

Component	Manufacturer/Model	Specifications/operating ranges
Primary Record Sampler located at the 22-1BB Monitor Cabinet (B-686)		
Record filter paper holder	BGI Incorporated	47 mm filter paper (Gelman Sciences); samples probes: 6 isokinetic tubes located 10 ft from base of stack at 3 pipe diameter downstream from last contributor
Flow totalizer	Rockwell/MR-9	8.92 m^3/h at 5 psi; temperature compensated at 60 °F
Flowmeter	Dwyer/RMC	Pressure rating: 35 psi; temperature rating: to 130 °F; accuracy: 2% of full scale; maintained at 2.0 cfm
Flow switch	Chem-Tec/500-316-BP	Maximum pressure: 0.2 scf/min to 35 scf/min at 15 psi, 45 scf/min at 60 psi; sample probes: 2 isokinetic tubes located at 10 ft from base of stack at 3 pipe diameter downstream for last contributor
Flow control valve	Eberline/10552-CO2-RAP-1R	
Vacuum pump	Gast/0822 or 0823	Oilless, 1/2 H.P. rating; capacity: 7.2 cfm at 0" Hg and 1,725 rpm
Process Control Sampler Located at the 221-BB Monitor Cabinet (B-700)		
Continuous air monitor	Eberline/AMS-3 Beta-Gamma	Detector: a pancake G-M tube that is 1-3/4 in. in diameter with a 1.4-2.0 mg/cm^2 mica window; scale: logarithmic; range: 10-100K cpm; airflow meter: 10-100 L/min maintained at 2 cfm; temperature range: 20 °F to 120 °F (-7 °C to 49 °C); sample probes: 6 isokinetic tubes located 10 ft from base of stack at 3 pipe diameter downstream from last contributor
Flow switch	Chem-Tec/500-316-BP	Maximum pressure: 0.2 scf/min to 35 scf/min at 15 psi, 45 scf/min at 60 psi; sample probes: 2 isokinetic tubes located 10 ft from base of stack at 3 pipe diameter downstream from last contributor
Flow control valve	Eberline/10552-CO2-RAP-1R	
Vacuum pump	Gast/0822 or 0823	Oilless; 1/2 H.P. rating; capacity: 7.2 cfm at 0" Hg and 1,725 rpm

Table 7-7. Gaseous Effluent Monitoring Instrumentation - 291-B-10.

Component	Manufacturer/Model	Specifications/operating ranges
Primary Record Sampler Located at the 225-B Building (B-748)		
Record filter paper holder	BGI Incorporated	47 mm filter paper (Gelman Sciences); sample probes: 6 isokinetic tubes located 45 ft from base of stack
Flow totalizer	Rockwell/MR-9	8.92 m^3/h at 5 psi; temperature compensated at 60 °F
Flowmeter	Dwyer/RMC	Pressure rating: 35 psi; temperature rating: to 130 °F; accuracy: 2% of full scale; maintained at 2.0 cfm
Flow switch	Chem-Tech /500-316-BP	Maximum pressure: 0.2 scf/min to 35 scf/min at 15 psi, 45 scf/min at 60 psi; sample probes: 2 isokinetic tubes located at 45 ft from base of stack
Flow control valve	Eberline/10552-CO2-RAP-1R	
Vacuum pump	Gast/0822 or 0823	Oilless, 1/2 H.P. rating; capacity: 7.2 cfm at 0" Hg and 1,725 rpm
Process Control Sampler Located at the 225-B Building (B-822)		
Continuous air monitor	Eberline/AMS-3 Beta-Gamma	Detector: a pancake G-M tube that is 1-3/4 in. in diameter with a 1.4-2.0 mg/cm^2 mica window; scale: logarithmic; range: 10-100K cpm; airflow meter: 10-100 L/min maintained at 2 cfm; temperature range: 20 °F to 120 °F (-7 °C to 49 °C); sample probes: 2 isokinetic tubes located 45 ft from base of stack
Flow switch	Chem-Tec/500-316-BP	Maximum pressure: 0.2 scf/min to 35 scf/min at 15 psi, 45 scf/min at 60 psi; sample probes: 2 isokinetic tubes located 45 ft from base of stack
Flow control valve	Eberline/10552-CO2-RAP-1R	
Vacuum pump	Gast/0822 or 0823	Oilless; 1/2 H.P. rating; capacity: 7.2 cfm at 0" Hg and1,725 rpm

Table 7-8. Gaseous Effluent Monitoring Instrumentation - 291-B-13.

Component	Manufacturer/Model	Specifications/operating ranges
Primary Record Sampler Located at the 221-BB Monitor Cabinet (B-690)		
Record filter paper holder	BGI Incorporated	47 mm filter paper (Gelman Sciences); sample probes: 6 isokinetic tubes located 10 ft from base of stack
Flow totalizer	Rockwell/MR-9	8.92 m^3/h at 5 psi; temperature compensated at 60 °F
Flowmeter	Dwyer/RMC	Pressure rating: 35 psi; temperature rating: to 130 °F; accuracy: 2% of full scale; maintained at 2.0 cfm
Flow switch	Chem-Tec 500-316-BP	Maximum pressure: 0.2 scf/min to 35 scf/min at 15 psi, 45 scf/min at 60 psi; sample probes: 2 isokinetic tubes located at 10 ft from base of stack
Flow control valve	Eberline/10552-CO2-RAP-1R	
Vacuum pump	Gast/0822 or 0823	Oilless, 1/2 H.P. rating; capacity: 7.2 cfm at 0" Hg and 1,725 rpm
Process Control Sampler Located at the 221-BB Building (B-693)		
Continuous air monitor	Eberline/AMS-3 Beta-Gamma	Detector: a pancake G-M tube that is 1-3/4 in. in diameter with a 1.4-2.0 mg/cm^2 mica window; scale: logarithmic; range: 10-100K cpm; airflow meter: 10-100 L/min maintained at 2 cfm; temperature range: 20 °F to 120 °F (-7 °C to 49 °C); sample probes: 6 isokinetic tubes located 10 ft from base of stack
Flow switch	Chem-Tec/500-316-BP	Maximum pressure: 0.2 scf/min to 35 scf/min at 15 psi, 45 scf/min at 60 psi; sample probes: 2 isokinetic tubes located 10 ft from base of stack
Flow control valve	Eberline/10552-CO2-RAP-1R	
Vacuum pump	Gast/0822 or 0823	Oilless; 1/2 H.P. rating; capacity: 7.2 cfm at 0" Hg and 1,725 rpm

Table 7-9. Gaseous Effluent Monitoring Instrumentation - 291-B-14.

Component	Manufacturer/Model	Specifications/operating ranges
Primary Record Sampler in the 296-B-14 Record Sampler Cabinet (B-698)		
Record filter paper holder	BGI Incorporated	47 mm filter paper (Gelman Sciences); samples probes: 6 isokinetic tubes located approximately 5 pipe diameter downstream of last contributor
Flow totalizer	Rockwell/MR-9	8.92 m^3/h at 5 psi; temperature compensated at 60 °F
Flowmeter	Dwyer/RMC	Pressure rating: 35 psi; temperature rating: to 130 °F; accuracy: 2% of full scale; maintained at 2.0 cfm
Flow switch	Chem-Tec/500-316-BP	Maximum pressure: 0.2 scf/min to 35 scf/min at 15 psi, 45 scf/min at 60 psi; sample probes: 2 isokinetic tubes located approximately 5 pipe diameter downstream for last contributor
Flow control valve	Eberline/10552-CO2-RAP-1R	
Vacuum pump	Gast/0822 or 0823	Oilless, 1/2 H.P. rating; capacity: 7.2 cfm at 0" Hg and 1,725 rpm
Process Control Sampler Located at the 296-B-14 Process Control Sampler Cabinet (B-678)		
Continuous air monitor	Eberline/AMS-3 Beta-Gamma	Detector: a pancake G-M tube that is 1-3/4 in. in diameter with a 1.4-2.0 mg/cm^2 mica window; scale: logarithmic; range: 10-100K cpm; airflow meter: 10-100 L/min maintained at 2 cfm; temperature range: 20 °F to 120 °F (-7 °C to 49 °C); sample probes: 6 isokinetic tubes located approximately 5 pipe diameter downstream from last contributor
Flow switch	Chem-Tec/500-316-BP	Maximum pressure: 0.2 scf/min to 35 scf/min at 15 psi, 45 scf/min at 60 psi; sample probes: 2 isokinetic tubes located approximately 5 pipe diameter downstream from last contributor
Flow control valve	Eberline/10552-CO2-RAP-1R	
Vacuum pump	Gast/0822 or 0823	Oilless; 1/2 H.P. rating; capacity: 7.2 cfm at 0" Hg and 1,725 rpm

Note: These systems are currently not operating and have been down since November 1990. For proposed future operation, a system upgrade has been designed to conform the VVS#2 system to be consistent with the other four B Plant/WESF stack cabinet layouts. Currently, the VVS#2 monitoring system is contained within two cabinets: one for the record sampler, and one for the process control sampler. The instrumentation listed above for the process control sampler is the instrumentation to which the system is currently being upgraded.

This page intentionally left blank.

8.0 HISTORICAL MONITORING/SAMPLING DATA FOR EFFLUENT STREAMS

Data generated from routine sampling of the B Plant liquid and gaseous effluents have, historically, focused on the radiological constituents of both effluent streams. The liquid streams were characterized for radiological and nonradiological compounds in the Liquid Effluent Study Project conducted during 1989 and 1990. This characterization was summarized in stream-specific reports for the BCP, BCS, BCE, and CBC (WHC 1990c, 1990d, 1990a, 1990b, respectively). Each of these reports will be discussed individually in Section 8.1.1. The gaseous effluents have not been routinely sampled for nonradiological constituents. Available data for all gaseous effluents are discussed in Section 8.1.2.

8.1 NORMAL CONDITIONS

This section presents historical monitoring and sampling data for liquid effluent streams under normal conditions.

8.1.1 Liquid Effluent Streams

Sampling data used in this analysis come from both the wastestream characterization for the routine operation configuration and the feed source data that is used as background.

The sampling scheme took representative samples by following *Test Methods for Evaluating Solid Wastes* (SW-846) procedure sampling and analytical protocol (EPA 1986). In some cases, American Society for Testing and Materials (ASTM) procedures were used when more appropriate than *Test Methods for Evaluating Solid Wastes*. This was accomplished by taking grab samples on a partitioned time random basis.

The details of the sampling, analytical, quality control, and quality assurance (QA) procedures utilized are contained in the *Waste Stream Characterization Report* (WHC 1989f).

8.1.1.1 BCE. The BCE stream was sampled at the 216-B-63 Ditch and, as such, the sample data (see Tables 8-2 and 8-3 at the end of this section) are representative of the constituents in the waste stream during routine operations. In addition to the wastestream characteristic data, annual average radionuclide concentrations from the CY 1989 effluent monitoring report (WHC 1990i) were included. The requirements of WAC 173-303-070 (WAC 1989) and the data found in WHC-EP-0342 (WHC 1990a) support the contention that the BCE is not a dangerous waste.

8.1.1.2 BCS. The wastestream data set was derived from the seven sample collected over the 36-mo period from December 1985 through December 1988 (Table 8-4). At the 221-BB Building, this sample point was selected because it was downstream of the contributor wastestream. Radiological data from the analysis of monthly composite sampling are shown in Tables 8-5 and 8-6. All tables are presented at the end of this section.

As with the chemical sewer stream, the BCS stream was evaluated against the dangerous waste requirements of WAC-173-303 and determined not to contain this type of waste. Data to support this contention is found in WHC-EP-0342 (WHC 1990d).

8.1.1.3 BCP. The wastestream characterization data for the BCP is reported in WHC-EP-0342 (WHC 1990c). These data and the appropriate background data are shown in Table 8-7. Samples were collected downstream of the contributing wastestream: at the 221-BB Building and at the 221-BF Building. Even though the BCP stream is higher than the other liquid wastestreams at B Plant, gross beta values were below the Interim Concentration Values developed by Westinghouse Hanford in 1988.

Mercury was detected in this stream at 9.5 ppb and 7.3 ppb. At the concentrations seen in these samples, it is thought that the mercury is present in the wastestream because of impurities in the sodium hydroxide. The sodium hydroxide used as a process chemical in the BCP stream is a technical-grade chemical. It is therefore expected that low levels of mercury might be present in the sodium hydroxide.

Data on the dangerous waste designation for this stream can be found also in WHC-EP-0432 (WHC 1990c).

8.1.1.4 CBC. Data from the CBC wastestream characterization are shown in Table 8-8. These data were collected over a four-mo period in 1989 and 1990 and include both radiological and chemical constituents. Additional discharge data for radionuclides are shown in Table 8-9.

As with the other three liquid streams, the CBC is not considered as a dangerous wastestream (WHC 1990b).

8.1.1.5 Sanitary Sewers. There are no data available for the sanitary sewers.

8.1.1.6 French Drains. There are no data available for the French drains.

8.1.2 Gaseous Effluent Streams

The monitoring systems associated with the B Plant main stacks provide data on the radiological components of the gaseous effluent from B Plant operations. Data on concentrations of gross alpha and beta emission for the years 1980–1989 from the main B Plant stacks are shown in Table 8-10. In 1989, all emissions were below the Hanford ACV values. Available data on specific radionuclides emitted from the 291-B-1 Stack are as follows (WHC 1990i).

Data for the remaining B Plant/WESF Stacks-296-B-5, 296-B-10, 296-B-13, and 296-B-14 are contained in WHC-EP-0141 (WHC 1990i).

There are no in-line monitoring or sampling systems for the gallery exhausters (296-B-21 through 296-B-27). Procedures are in place for conducting high-volume air sampling at the exhaust point closest to the gas air sampling port in the event of an upset condition in the galleries. No data are available (RHO 1986).

No in-line monitoring or sampling is conducted at the bulk chemical storage tanks or the AMU/scale tank vents, and data are not available for any of these locations.

Nitrogen oxide is the only nonradiological constituent assumed to be possibly emitted from the B Plant main stacks, in particular 291-B-1. Nitrogen oxide concentrations are assumed to be less than 5 ppm (RHO 1986). No routine monitoring or sampling is performed.

8.2 UPSET CONDITIONS

A review of all available documentation delineated that there are no upset conditions that are relevant to the current liquid receiving sites.

Table 8-1. Radionuclide Emissions from the 291-B-1 Stack.

Radionuclide	1987 Concentration (μCi/mL)	1989 Concentration (μCi/mL)
$^{89,90}Sr$	9.0 E-14	3.79 E-14
^{137}Cs	2.0 E-12	1.14 E-12
$^{239,240}Pu$	<8.0 E-15	4.81 E-15
^{241}Am	<5.0 E-14	<1.45 E-15

Table 8-2. Historical Analytical Data for the BCE Stream. *Background data were taken from the 200 East Area Sanitary Water (1985-1988).* (2 sheets)

Analyte	Concentration[a]				Maximum detected concentration	Background concentration[b]	
	MDL[c]	Mean	SD[d]	90%CI		Mean	SD[d]
Metals							
Barium	1.00 E+1	2.92 E+1	8.54 E-1 (4,0)	3.06 E+1	3.10 E+1	1.05 E+2	1.00 E+1 (5)
Boron	1.00 E+1	1.85 E+1	7.85 E+0 (4,1)	3.14 E+1	4.20 E+1	NR	
Calcium	5.00 E+1	1.84 E+4	2.10 E+2 (4,0)	1.88 E+4	1.89 E+4	NR	
Copper	1.00 E+1	2.12 E+1	5.20 E+0 (4,0)	2.98 E+1	3.60 E+1	2.50 E+1	1.00 E+1 (5)
Iron	3.00 E+1	5.32 E+1	9.41 E+0 (4,1)	6.87 E+1	7.00 E+1	8.25 E+1	5.19 E+1 (5)
Magnesium	5.00 E+1	4.15 E+3	8.11 E+1 (4,0)	4.28 E+3	4.32 E+3	NR	
Manganese	5.00 E+0	5.75 E+0	4.79 E-1 (4,2)	6.53 E+0	7.00 E+0	<1.00 E+1	--(4)
Potassium	5.00 E+1	8.01 E+2	5.28 E+1 (4,0)	8.87 E+2	9.23 E+2	NR	
Silicon	5.00 E+1	2.32 E+3	6.12 E+1 (4,0)	2.42 E+3	2.44 E+3	NR	
Sodium	5.00 E+1	2.12 E+3	8.46 E+1 (4,0)	2.26 E+3	2.27 E+3	2.28 E+3	1.26 E+2 (4)
Strontium	1.00 E+1	9.62 E+1	3.25 E+0 (4,0)	1.02 E+2	1.02 E+2	NR	
Uranium	1.00 E+1	4.71 E-1	3.37 E-2 (3,0)	5.36 E-1	5.36 E-1	NR	
Zinc	1.00 E+1	1.27 E+1	1.25 E+0 (4,0)	1.48 E+1	1.60 E+1	<1.00 E+2	--(4)
Organics							
Acetone	1.00 E+1	1.12 E+1	1.25 E+0 (4,3)	1.33 E+1	1.50 E+1	NR	
Ammonia	5.00 E+1	5.52 E+1	5.25 E+0 (4,3)	6.38 E+1	7.10 E+1	NR	
TOC	--	1.10 E+3	--(1)	--	1.10 E+3	NR	
TOX	--	4.32 E+1	6.76 E+0 (4,0)	5.43 E+1	5.90 E+1	NR	
Total Carbon	--	1.43 E+4	5.96 E+2 (4,0)	1.53 E+4	1.60 E+4	NR	
Radionuclides							
Gross alpha (pCi/L)	--	5.55 E-1 <2.2 E+0[e]	1.60 E-1 (3,2)	8.57 E-1	8.22 E-1	NR	
Gross beta (pCi/L)	--	2.18 E+0 <1.1 E+1[e]	4.32 E-1 (3,2)	3.00 E+0	2.97 E+0	NR	
$^{89,90}Sr$ (pCi/L)	--	1.44 E-1 <1.9 E+1[e]	3.33 E-2 (3,1)	2.07 E-1	2.09 E-1	NR	

Table 8-2. Historical Analytical Data for the BCE Stream. *Background data were taken from the 200 East Area Sanitary Water (1985-1988).* (2 sheets)

Analyte	Concentration[a]				Maximum detected concentration	Background concentration[b]	
	MDL[c]	Mean	SD[d]	90%CI		Mean	SD[d]
^{137}Cs (pCi/L)	--	1.11 E+0	6.18 E-1 (2,0)	3.01 E+0	1.73 E+0	NR	
		<5.3 E+1[e]					
^{242}Cm (pCi/L)	--	4.56 E-3	7.50 E-4 (2,1)	6.87 E-3	5.31 E-3	NR	
^{14}C (pCi/L)	--	4.24 E+0	7.35 E-1 (2,1)	6.51 E+0	4.98 E+0	NR	
^{3}H (pCi/L)	--	1.59 E+2	6.68 E+1 (3,2)	2.85 E+2	2.50 E+2	NR	
^{234}U (pCi/L)	--	1.60 E-1	2.34 E-2 (3,0)	2.04 E-1	1.89 E-1	NR	
^{238}U (pCi/L)	--	1.37 E-1	2.96 E-3 (3,0)	1.43 E-1	1.43 E-1	NR	
$^{239,240}Pu$ (pCi/L)	--	<1.8 E+1[e]				NR	
^{241}Am (pCi/L)	--	<3.6 E +1[e]				NR	
Other							
Chloride	5.00 E+2	1.50 E+3	1.63 E+2 (4,0)	1.77 E+3	1.90 E+3	3.05 E+3	6.76 E+2 (4)
Fluoride	5.00 E+2	1.39 E+2	1.58 E+0 (4,0)	1.42 E+2	1.43 E+2	1.13 E+2	2.50 E+1 (4)
Sulfate	5.00 E+2	1.11 E+4	4.02 E+2 (4,0)	1.18 E+4	1.22 E+4	1.68 E+4	3.73 E+3 (4)
TDS	--	5.07 E+4	1.49 E+3 (4,0)	5.32 E+4	5.40 E+4	8.10 E+1	1.69 E+1 (4)
Conductivity (µs)	--	146.0	11.7 (4)	165.0	175.0	NR	
pH	--	7.45	0.13 (4)	7.67	7.70	NR	
Temperature (°C)	--	20.8	2.28 (4)	24.6	27.4	NR	

[a]All data in ppb unless otherwise noted; NR denotes "not reported".
[b]Background analytes are included only for those analytes reported for the waste stream.
[c]MDL = Minimum detection limit.
[d]The first number in ( ) represents the number of samples; the second number, when present, represents the number of results in each data set below the MDL.
[e]Data taken from Westinghouse Hanford (1990i).

Source: Unless otherwise noted, data are taken from Westinghouse Hanford (1990a), in which averages less than detectable are not included.

Table 8-3. Radionuclide Deposits for CY 1989 from the B Plant Chemical Sewer to the 216-B-63 Trench.

Radionuclides (μCi/mL)	Annual average	Monthly maximum
Gross alpha	<2.20 E-9	<2.84 E-9
Gross beta	<1.12 E-8	<2.75 E-8
^{90}Sr	<1.93 E-8	<2.51 E-8
^{137}Cs	<5.30 E-8	<6.78 E-8
^{239}Pu	<1.77 E-8	<2.11 E-8
^{241}Am	3.61 E-8	<4.22 E-8

Source: Westinghouse Hanford (1990i).

Table 8-4. Historical Analytical Data for the BCS Stream. *Background data were taken from the 200 East Area raw water (1986-1987).* (2 sheets)

Analyte	Concentration[a]				Maximum detected concentration	Background concentration[b]	
	MDL[c]	Mean	SD[d]	90% CI		Mean	SD[d]
Metals							
Calcium	5.00 E+1	1.78 E+2	8.88 E+1 (7,2)	3.06 E+2	6.93 E+2	1.84 E+4	1.47 E+3 (5)
Copper	1.00 E+1	1.07 E+1	7.14 E-1 (7,6)	1.17 E+1	1.50 E+1	1.06 E+1	1.34 E+0 (5)
Iron	5.00 E+1	9.41 E+1	4.82 E+1 (7,5)	1.64 E+2	3.83 E+2	6.36 E+1	2.57 E+1 (5)
Lead	5.00 E+0	5.00 E+0	0.00 E+0 (4,3)	5.00 E+0	5.00 E+0	NR	
Magnesium	5.00 E+1	5.07 E+1	6.67 E-1 (6,5)	5.17 E+1	5.40 E+1	4.19 E+3	4.83 E+2 (5)
Mercury	1.00 E-1	1.14 E-1	1.43 E-2 (7,6)	1.35 E-1	2.00 E-1	NR	
Nickel	1.00 E+1	1.01 E+1	1.43 E-1 (7,6)	1.03 E+1	1.10 E+1	1.04 E+1	8.90 E-1 (5)
Potassium	1.00 E+2	1.00 E+2	3.33 E-6 (7,6)	1.00 E+2	1.00 E+2	7.95 E+2	6.24 E+1 (5)
Sodium	1.00 E+2	1.87 E+2	2.63 E+1 (7,5)	2.25 E+2	3.01 E+2	2.26 E+3	2.42 E+2 (5)
Uranium	3.19 E-2	2.67 E-1	1.44 E-1 (6,2)	4.80 E-1	9.54 E-1	7.26 E-1	2.22 E-1 (4)
Zinc	5.00 E+0	1.27 E+1	7.23 E+0 (7,4)	2.31 E+1	5.60 E+1	2.00 E+1	2.12 E+1 (5)
Organics							
Acetone	1.00 E+1	3.14 E+1	5.57 E+0 (5,0)	3.99 E+1	4.10 E+1	NR	
Ammonia	5.00 E+1	1.15 E+2	1.95 E+1 (7,1)	1.43 E+2	2.03 E+2	NR	
Phenol	1.00 E+1	1.01 E+1	1.43 E-1 (7,6)	1.03 E+1	1.10 E+1	NR	
Radionuclides (pCi/L)							
Gross alpha	--	3.02 E+0	2.46 E+0 (5,1)	6.80 E+0	1.28 E+1	8.85 E-1	5.30 E-1 (4)

Table 8-4. Historical Analytical Data for the BCS Stream. *Background data were taken from the 200 East Area raw water (1986-1987).* (2 sheets)

Analyte	Concentration[a]				Maximum detected concentration	Background concentration[b]	
	MDL[c]	Mean	SD[d]	90% CI		Mean	SD[d]
Gross beta	--	6.97 E+1	3.87 E+1 (7,0)	1.25 E+2	2.83 E+2	4.47 E+0	1.76 E-0 (4)
Other							
Nitrate	5.00 E+2	9.17 E+2	4.17 E+2 (7,6)	1.52 E+3	3.42 E+3	9.96 E+2	8.79 E+2 (5)
Conductivity (µS)	--	29.8	10.4 (6,0)	45.1	69.0	93.2	46.1 (5)
pH	--	6.31	0.83 (7,0)	5.12	10.8	7.41	1.18 (5)
Temperature (°C)	--	58.1	4.98 (7,0)	65.2	80.9	16.4	5.84 (5)

[a]All data in ppb unless otherwise noted; NR denotes "not reported."
[b]Background analytes are included only for those analytes reported for the waste stream.
[c]MDL= Minimum detection limit.
[d]The first number in ( ) represents the number of samples; the second number, when present, represents the number of results in each data set below the MDL.

Source: Unless otherwise noted, data are taken from Westinghouse Hanford (1990d), in which averages less than detectable are not included.

Table 8-5. Radionuclide Data for the B Plant Steam Condensate Stream from Monthly Operating Composite Samples.

Radionuclide	Annual Average Concentration (μCi/mL)				
	1985[a]	1986[a]	1987[a]	1988[a]	1989[b]
Gross alpha	1.3 E-8	2.1 E-7	None	7.4 E-9	<9.0 E-9
Gross beta	1.9 E-6	5.4 E-7	None	7.8 E-7	<9.9 E-8
$^{89,90}Sr$	7.1 E-7	NA[c]	NA	6.5 E-7	9.9 E-8
^{137}Cs	2.9 E-7	NA	NA	8.2 E-8	<8.3 E-8
$^{239,240}Pu$	--	--	--	--	<1.5 E-8
^{241}Am	--	--	--	--	<1.5 E-8

[a]Source: Westinghouse Hanford (1990d).
[b]Source: Westinghouse Hanford (1990i).
[c]NA = data not available.

Table 8-6. Radionuclide Deposits for CY 1989 from the B Plant Steam Condensate to the 216-B-55 Crib.

Radionuclides (μCi/mL)	Annual Average	Monthly Maximum
Gross alpha	<9.03 E-9	<1.07 E-8
Gross beta	<9.90 E-8	<5.35 E-7
^{90}Sr	9.86 E-8	<4.69 E-9
^{137}Cs	8.30 E-8	<1.02 E-7
^{239}Pu	1.45 E-8	<3.55 E-8
^{241}Am	1.45 E-8	<3.55 E-8

Source: Westinghouse Hanford (1990i).

Table 8-7. Historical Analytical Data for the BCP Stream. *Background data were taken from the 200 East Area raw water (1986-1987).* (2 sheets)

Analyte	Concentration[a]				Maximum detected concentration	Background concentration[b]	
	MDL[c]	Mean	SD[d]	90% CI		Mean	SD[d]
Metals							
Calcium	5.00 E-1	6.92 E+3	6.88 E+3 (2,1)	2.81 E+4	1.38 E+4	1.84 E+4	1.47 E+3 (5)
Iron	3.00 E+1	4.75 E+1	1.75 E+1 (2,1)	1.01 E+2	6.50 E+1	6.36 E+1	2.57 E+1 (5)
Lead	5.00 E+0	1.45 E+1	5.00 E-1 (2,0)	1.60 E+1	1.50 E+1	NR	
Magnesium	5.00 E+1	2.43 E+2	1.93 E+2 (2,1)	8.37 E+2	4.36 E+2	4.19 E+3	4.83 E+2 (5)
Manganese	5.00 E+0	7.00 E+0	2.00 E+0 (2,10)	1.32 E+1	9.00 E+0	9.80 E+0	3.49 E+0 (5)
Mercury	1.00 E-1	8.40 E+0	1.10 E+2 (2,0)	1.18 E+1	9.50 E+0	NR	
Zinc	5.00 E+0	8.20 E+1	7.60 E+1 (2,0)	3.16 E+2	1.58 E+2	2.00 E+1	2.12 E+1 (5)
Organics							
Acetone	1.00 E+1	2.92 E+2	2.25 E+1 (2,0)	3.62 E+2	3.15 E+2	NR	
Ammonia	5.00 E+1	1.25 E+3	1.20 E+2 (2,0)	1.62 E+3	1.37 E+3	NR	
2-Butanone	1.00 E+1	2.70 E+1	1.70 E+1 (2,1)	7.93 E+1	4.40 E+1	NR	
Decane	1.00 E+1	2.00 E+1	--(1)	--	2.0 E+1	NR	
Heneicosane	1.00 E+1	3.20 E+1	--(1)	--	3.20 E+1	NR	
2-Hexanone	1.00 E+1	9.00 E+0	3.00 E+0 (2,0)	1.82 E+1	1.20 E+1	NR	
TOC	7.00 E+2	1.00 E+3	3.00 E+2 (2,1)	1.92 E+3	1.30 E+3	1.36 E+3	2.53 E+2 (5)
Radionuclides (pCi/L)							
Gross alpha	--	3.27 E+0	6.65 E-1 (2,0)	5.31 E+0	3.93 E+0	8.85 E+1	5.30 E+1 (4)
Gross beta	--	2.43 E+4	1.52 E+4 (2,0)	7.12 E+4	3.95 E+0	4.47 E-0	1.76 E-0 (4)

Table 8-7. Historical Analytical Data for the BCP Stream. *Background data were taken from the 200 East Area raw water 1986-1987).* (2 sheets)

Analyte	Concentration[a]				Maximum detected concentration	Background concentration[b]	
	MDL[c]	Mean	SD[d]	90% CI		Mean	SD[d]
Other							
Nitrate	5.00 E+2	9.00 E+2	4.00 E+2 (2,1)	2.13 E+2	1.30 E+3	9.96 E+2	8.79 E+2 (5)
Conductivity (µs)	--	25.5	0.50 (2)	27.0	26.0	93.2	46.1
pH	--	8.86	0.26 (2)	9.64	9.11	7.41	1.18
Temperature (°C)	--	20.4	3.30 (2)	30.6	23.7	16.4	5.84

[a]All data in ppb unless otherwise noted; NR denotes "not reported."
[b]Background analytes are included only for those analytes reported for the waste stream.
[c]MDL + Minimum detection limit.
[d]The first number in ( ) represents the number of samples; the second number, when present, represents the number of results in each data set below the MDL.

Source: Unless otherwise noted, data are taken from Westinghouse Hanford (1990c), in which averages less than detectable are not included.

Table 8-8. Historical Analytical Data for the CBC Stream. *Background data were taken from the 200 East Area raw water (1986-1987).* (2 sheets)

Analyte	Concentration[a]				Maximum detected concentration	Background concentration[b]	
	MDL[c]	Mean	SD[d]	90%CI		Mean	SD[d]
Metals							
Barium	1.00 E+1	3.15 E+1	6.45 E-1 (4,0)	3.26 E+1	3.30 E+1	2.80 E+1	3.40 E+0 (5)
Boron	1.00 E+1	1.57 E+1	5.11 E+0 (4,2)	2.41 E+1	3.10 E+1	NR	
Calcium	5.00 E+1	1.88 E+4	2.78 E+2 (4,0)	1.93 E+4	1.95 E+4	1.84 E+4	1.47 E+3 (5)
Iron	3.00 E+1	3.50 E+1	2.12 E+0 (4,1)	3.85 E+1	3.90 E+1	6.30 E+1	2.57 E+1 (5)
Lead	5.00 E+0	5.50 E+0	5.00 E-1 (4,3)	6.32 E+0	7.00 E+0	NR	
Magnesium	5.00 E+1	4.36 E+3	1.12 E+2 (4,0)	4.54 E+3	4.57 E+3	4.19 E+3	4.83 E+2 (5)
Manganese	5.00 E+0	5.00 E+0	0.00 E+0 (4,3)	5.00 E+0	5.00 E+0	9.80 E+0	3.49 E+0 (5)
Potassium	5.00 E+1	7.41 E+2	1.53 E+1 (4,0)	7.66 E+2	7.68 E+2	7.95 E+2	6.24 E+1 (5)
Silicon	5.00 E+1	2.46 E+3	6.79 E+1 (4,0)	2.57 E+3	2.66 E+3	NR	
Sodium	5.00 E+1	2.06 E+3	3.15 E+1 (4,0)	2.11 E+3	2.13 E+3	2.26 E+3	2.42 E+2 (5)
Strontium	1.00 E+1	9.40 E+1	2.65 E+0 (4,0)	9.83 E+1	9.90 E+1	NR	
Uranium	1.00 E+1	7.91 E-1	3.18 E-1 (3,0)	1.39 E+0	1.42 E+0	7.26 E-1	2.22 E-1 (4)
Zinc	5.00 E+1	6.00 E+0	7.07 E-1 (4,2)	7.16 E+0	8.00 E+0	2.00 E+1	2.12 E+1 (5)
Organics							
Acetone	1.00 E+1	1.15 E+1	1.50 E+0 (4,3)	1.40 E+1	1.60 E+1	NR	
1-Butanol	1.00 E+1	1.20 E+1	-- (1)	--	1.20 E+1	NR	
2-Butanone	1.00 E+1	1.00 E+1	0.00 E+0 (4,3)	1.00 E+1	1.00 E+1	NR	
Trichloromethane	5.00 E+0	5.75 E+0	7.50 E-1 (4,3)	6.98 E+0	8.00 E+0	1.18 E+1	4.02 E+0 (5)
TOC	1.00 E+3	1.07 E+3	3.33 E+1 (3,2)	1.13 E+3	1.10 E+3	1.36 E+3	2.53 E+2 (5)
TOX	8.00 E+0	8.25 E+0	6.29 E-1 (4,3)	9.28 E+0	1.00 E+1	NR	
Total Carbon	--	1.50 E+4	6.55 E+2 (4,0)	1.61 E+4	1.59 E+4	NR	
Radionuclides							
Gross alpha (pCi/L)	--	6.8 E+0[e]				8.85 E-1	5.30 E-1 (4)
Gross beta (pCi/L)	--	2.49 E+0 9.7E+0[e]	2.00 E-1 (2,0)	3.11 E+0	2.69 E+0	4.47 E+0	1.76 E+0 (4)
$^{89,90}Sr$ (PCi/L)	--	1.82 E-1 <1.9 E+1[e]	3.18 E-2 (3,1)	2.42 E-1	2.39 E-1	NR	
^{137}Cs (pCi/L)	--	<6.4 E+1[e]				NR	
^{60}Co (pCi/L)	--	2.85 E-1	1.52 E-1 (3,2)	5.72 E-1	5.86 E-1	NR	
^{234}U (pCi/L)	--	2.51 E-1	1.58 E-2 (3,0)	2.80 E-1	2.81 E-1	NR	
^{238}U (pCi/L)	--	1.92 E-1	7.75 E-3 (3,0)	2.07 E-1	2.02 E-1	NR	
$^{239,240}Pu$ (pCi/L)	--	2.37 E-3 <1.83 E+1[e]	8.15 E-4 (2,1)	4.88 E-3	3.19 E-3	NR	
^{241}Am (pCi/L)	--	<3.8 E+1[e]				NR	
Total Radium (pCi/L)	--	1.14 E-1	4.63 E-2 (3,2)	2.01 E-1	2.04 E-1	NR	
Other							
Chloride	5.00 E+2	8.75 E+2	1.31 E+2 (4,1)	1.09 E+3	1.10 E+3	8.71 E+2	2.37 E+2 (5)
Fluoride	5.00 E+2	1.32 E+2	2.27 E+0 (4,0)	1.36 E+2	1.38 E+2	NR	
Nitrate	5.00 E+2	5.00 E+2	0.00 E+0 (4,1)	5.00 E+2	5.00 E+2	9.96 E+2	8.79 E+2 (5)
Sulfate	5.00 E+2	1.03 E+4	4.48 E+2 (4,0)	1.11 E+4	1.13 E+4	1.06 E+4	9.97 E+2 (5)

Table 8-8. Historical Analytical Data for the CBC Stream. *Background data were taken from the 200 East Area raw water (1986-1987).* (2 sheets)

Analyte	Concentration[a]				Maximum detected concentration	Background concentration[b]	
	MDL[c]	Mean	SD[d]	90%CI		Mean	SD[d]
TDS	--	6.05 E+4	2.84 E+3 (4,0)	6.52 E+4	6.40 E+4	NR	
Conductivity (µs)	--	135.0	4.03 (4)	142.0	144.0	9.32 E+1	4.61 E+1 (5)
pH	--	7.64	0.18 (4)	7.94	8.12	7.41	1.18 (5)
Temperature (°C)	--	10.6	1.25 (4)	12.7	13.9	16.4	5.84 (5)

[a]all data in ppb unless otherwise noted; Nr denotes "not reported."
[b]Background analytes are included only for those analytes reported for the waste stream.
[c]MDL = Minimum detection limit.
[d]The first number in ( ) represents the number of samples; the second number, when preset, represents the number of results in each data set below the MDL.
[e]Data taken from Westinghouse Hanford (1990i).

Source: Unless otherwise noted, data are taken from Westinghouse Hanford (1990b), in which averages less than detectable are not included.

Table 8-9. Radionuclide Deposits for CY 1989 from the B Plant Cooling Water to the 216-B-3 Pond.

Radionuclides (μCi/mL)	Annual Average	Monthly Maximum
Gross alpha	<6.77 E-9	<4.14 E-8
Gross beta	<9.72 E-9	<2.97 E-8
^{90}Sr	<1.89 E-8	<6.22 E-8
^{137}Cs	<6.37 E-8	<1.11 E-7
^{239}Pu	<1.82 E-8	<5.43 E-8
^{241}Am	<3.82 E-8	<1.09 E-8

Source: Westinghouse Hanford (1990i).

Table 8-10. B Plant Gaseous Effluent System Radiological Data[a].

Year		Stack[b]				
		291-B-1	296-B-5	296-B-10	296-B-13	296-B14
1989	α	<3.52 E-15	<3.56 E-15	<3.50 E-15	<3.50 E-15	<3.63 E-15
	ß	1.22 E-12	3.42 E-14	3.63 E-14	3.24 E-14	1.15 E-13
1988	α	<3.50 E-15	<3.50 E-15	<3.50 E-15	<3.50 E-15	<3.50 E-15
	ß	8.14 E-13	<1.21 E-14	4.14 E-14	<1.31 E-14	3.24 E-14
1987	α	<5.77 E-15	<3.50 E-15	<3.49 E-15	4.12 E-15	<3.69 E-15
	ß	2.19 E-12	<1.20 E-14	<1.73 E-14	<1.24 E-14	7.06 E-14
1986	α	<8.39 E-15	<3.52 E-15	<3.51 E-15	3.72 E-15	<9.44 E-15
	ß	1.76 E-11	<2.03 E-14	8.55 E-14	<1.51 E-14	1.72 E-13
1985	α	<4.90 E-15	<3.50 E-15	<3.52 E-15	<3.76 E-15	<3.72 E-15
	ß	5.36 E-12	5.38 E-14	8.12 E-13	5.26 E-14	1.42 E-13
1984	α	1.27 E-14	<3.55 E-15	<3.54 E-15	<3.50 E-15	<3.94 E-15
	ß	2.27 E-11	<3.62 E-14	8.23 E-12	<2.47 E-14	8.53 E-14
1983	α	<6.42 E-15	<3.21 E-15	<3.24 E-15	<3.50 E-15	<7.10 E-15
	ß	4.02 E-11	<2.58 E-14	<2.32 E-14	<1.55 E-14	2.64 E-12
1982	α	<7.10 E-15	<2.59 E-14	<3.50 E-15	3.50 E-15	<7.10 E-15
	ß	2.00 E-10	<9.40 E-15	3.64 E-14	<1.20 E-14	1.80 E-11
1981	α	<1.71 E-14	<2.18 E-14	<4.20 E-14	<7.83 E-14	<6.51 E-14
	ß	1.31 E-10	2.34 E-13	5.90 E-13	<9.13 E-14	1.14 E-11
1980	α	2.27 E-14	7.64 E-14	5.55 E-14	5.25 E-14	1.82 E-13
	ß	2.92 E-10	8.27 E-13	8.93 E-13	3.57 E-13	2.46 E-12

[a]All data are in μCi/mL.
[b]Administrative Control Values for the stacks can be found in WHC-CM-7-5 (WHC 1988c).

Source: Annual effluent discharge reports.

9.0 SAMPLE ANALYSIS

Analytical operations within B Plant are covered by *Laboratories Administration*, WHC-CM-5-4 (WHC 1988d). These procedures define operations not covered by existing codes and standards and contain all necessary requirements for qualifying personnel, procedures, and/or equipment to conduct processes in a timely, competent manner. Analytical laboratory operating instructions also cover the preparation, documentation, and control of individual procedures.

QA requirements for the Analytical Laboratory procedures are defined in the *Quality Assurance Project Plan for the Facility Effluent Monitoring Plan Activities*, WHC-EP-0466 (WHC 1991b), and the following documents:

- WHC-CM-4-2, *Quality Assurance Manual* (WHC 1989e)
- SD-CD-QAPP-001, *Analytical Chemistry Services Laboratories Quality Assurance Plan* (WHC 1989b).

9.1 U.S. DEPARTMENT OF ENERGY ANALYTICAL AND LABORATORY GUIDELINES

The analytical and laboratory procedures for the FEMP activities are identified in the *Quality Assurance Project Plan for the Facility Effluent Monitoring Plan Activities* (WHC 1991b). General requirements for laboratory procedures, data analyses, and statistical treatment are addressed in the QAPP. Detailed descriptions of these requirements are given in each FEMP.

The following elements are identified in *Environmental Regulatory Guide for Radiological Effluent Monitoring and Environmental Surveillance* (DOE 1991).

Table 9-1. Laboratory Procedures.

Element	Documentation
Sample identification system	To be provided when complete
Procedures preventing crosscontamination	Contained in 222-S Laboratory Analytical Procedures (identified in QAPP WHC-EP-0446 Table 8-1)
Documentation of methods	Contained in 222-S Laboratory Analytical Procedures (identified in QAPP WHC-EP-0446 Table 8-1)
Gamma emitting radionuclides	See QAPP Table 8-1
Calibration	See QAPP Table B-1
Handling of samples	See QAPP Table 8-1
Analysis method and capabilities	See QAPP Table 8-1
Gross alpha, beta, and gamma measurements	See QAPP Table 8-1

Table 9-1. Laboratory Procedures.

Element	Documentation
Gross alpha, beta, and gamma measurements	See QAPP Table 8-1
Direct gamma-ray spectrometry	See QAPP Table 8-1
Beta counters	See QAPP Table 8-1
Alpha-energy analysis	See QAPP Table 8-1
Radiochemical separation procedures	To be provided when available
Reporting of results	To be provided when available
Counter calibration	See Table B-1, QAPP
Intercalibration of equipment and procedures	To be provided when available
Counter background	Contained in 222-S Laboratory Analytical Procedures (QAPP, Table 8-1)
Quality assurance	To be provided when available

Table 9-2. Data Analyses and Statistical Treatment.

Element	Documentation
Summary of data and statistical treatment requirements	To be provided when available
Variability of effluent and environmental data	To be provided when available
Summarization of data and testing for outliers	To be provided when available
Treatment of significant figures	To be provided when available
Parent-decay product relationships	To be provided when available
Comparisons to regulatory or administrative control standards and control data	To be provided when available
Quality assurance	To be provided when available

10.0 NOTIFICATIONS AND REPORTING REQUIREMENTS

Notifications and reporting of specific events related to environmental releases and/or events involving effluents and/or hazardous materials shall be made per DOE Orders 5400.1 (DOE 1988a) and 5000.3A (DOE 1990a). Implementation of the orders is accomplished via *Management Requirements and Procedures (MRP) Manual*, WHC-CM-1-3, Procedure 5.14, Rev. 6. Specific implementation, where required, is included in the appropriate facility's occurrence categorization, notification, and reporting procedure. Implementation of environmental limits and requirements is found in the *Environmental Compliance Manual*, WHC-CM-7-5 (WHC 1988c).

10.1 DEFINITIONS

Definitions of terms used in notification and reporting of specific events related to environmental releases or involving effluent and/or hazardous materials are as follows.

10.1.1 Primary Environmental Monitors

Monitoring equipment legally required to monitor ongoing discharges (see regulations in Section 3.0). In general, this term applies to monitors closest to the point of discharge that are used to determine if discharges are within specified limits.

10.1.2 Secondary Environmental Monitors

Environmental monitoring equipment or activities that, if degraded, will produce a more than minor disruption of a monitoring program. An example of a minor effect would be the failure of a unit whose place in the program is effectively duplicated by overlap between one or more components.

10.1.3 Environmental Control Limit

Environmental requirements based on permit limits, DOE/EPA/WAC requirements, and Westinghouse Hanford policy.

10.1.4 Hazardous Substance or Material

Solid, liquid, or gaseous material as defined by the following regulations.

a. Any CERCLA hazardous substance identified in 40 CFR 302.4 (EPA 1989a).

b. Any Superfund Amendments and Reauthorization Act (SARA) extremely hazardous substance identified in Appendix A of 40 CFR 355 (EPA 1987).

c. Any dangerous waste regulated pursuant to the WAC Chapter 173-303, *Dangerous Waste Regulations* (WAC 1989).

10.1.5 Nonconformance

A nonconformance exists when any of the following have occurred, and the appropriate recovery actions are implemented.

a. Exceeding an ECL.

b. Failure to meet an environmental surveillance requirement.

c. Failure to implement an environmental administrative control.

d. Failure of primary environmental monitoring equipment to pass a surveillance check.

10.1.6 Oil

Oil of any kind or in any form, including, but not limited to, petroleum, fuel oil, sludge, oil refuse, and oil mixed with wastes other than dredged spoil.

10.1.7 Occurrence Report

A written evaluation of an event or condition that is prepared in sufficient detail to enable the reader to assess its significance, consequences, or implications and to evaluate the actions being proposed or employed to correct the condition or to avoid recurrence.

10.1.8 Releases

Any spilling, leaking, pumping, pouring, emitting, emptying, discharging, injecting, escaping, leaching, dumping, or otherwise disposing of substances into the environment. This includes abandoning/discarding any type of receptacle containing substances or the stockpiling of a reportable quantity of a hazardous substance in an unenclosed containment structure.

10.1.9 Statistically Significant Increase

When used in reference to a continuous release of a hazardous substance listed in 40 CFR 302.4 (EPA 1988), means a parameter that has reached the upper 5% of expected values for continuous releases. Determination of statistical significance shall be based on any of the following:

a. The nonparametric statistical test

b. The control chart or student test

c. Other tests that have equivalent sensitivity to (a) or (b).

10.2 REQUIREMENTS

10.2.1 Occurrence Identification and Immediate Response

10.2.1.1 Each employee shall identify appropriate events and conditions and shall promptly notify management of such occurrences. These actions may include, but are not limited to the following:

a. Call 811 if immediate help is required (e.g., fire department, ambulance, or patrol)

b. Call 3-3800 (the Patrol Operations Center) if assistance other than fire, ambulance, or patrol is required

c. After requesting necessary outside assistance, the employee shall notify their supervisor, who shall notify the facility manager, the building emergency director, and the occurrence notification center (ONC) at 6-2900.

10.2.1.2 Operations personnel shall take appropriate immediate action to stabilize or return the facility/operation to a safe condition.

10.2.1.3 The oversight organizations shall notify their RL counterparts of the event after receiving notifications from, and discussing the event with, the facility manager.

10.2.2 Occurrence Categorization

Occurrences (environmental) shall be categorized as soon as practical using the specific criteria for radioactive and hazardous materials release according to WHC-CM-5-6 (WHC 1988b). These categorizations should be made within 2 h of identification. Occurrences shall be categorized by their seriousness; if categorization is not clear, the occurrence shall be initially categorized at the highest level being considered. The occurrence categorization shall then be either evaluated, maintained, or lowered as information becomes available.

10.3 OCCURRENCE CATEGORIZATION

Occurrences are categorized into radioactive releases, hazardous substances releases, discovery of radioactive or hazardous material contamination due to DOE operations, and agreement/compliance activities (WHC 1988c), as discussed below.

10.3.1 Radioactive Releases

Radioactive releases are categorized into emergency, unusual occurrence, and off-normal. These categories are further defined as follows (DOE 1990a).

10.3.1.1 **Emergency.** An emergency under this category is defined as follows:

- Any release of radioactive material to controlled or uncontrolled areas in concentrations that, if averaged over a period of 24 h, would exceed 5,000 times the respective concentration guides specified for such materials in DOE Orders 5400.5 (DOE 1990b) and 5480.11 (DOE 1988b)

- Any release of radioactive material offsite that is not a normal monitored release and could reasonably be expected to result in an annual dose or dose commitment to any member of the general population greater than 500 mrem.

10.3.1.2 **Unusual Occurrence.** An unusual occurrence under this category is defined as follows:

- Release of a radioactive material that exceeds a reportable quantity and is not federally permitted

- Release of radioactive material that violates environmental requirements in permits, regulations, or DOE standards

- Release below emergency levels which requires immediate (<4 h) reporting to regulatory authorities or triggers specific action levels for an outside agency.

10.3.1.3 **Off-Normal.** An off-normal release under this category is defined as follows:

- Any release of radionuclide material to controlled or uncontrolled areas that is not part of a normal monitored release

- Any controlled release of radionuclide material that occurs as a monitored part of normal operations which exceed what historical data and/or analysis show is expected as a result of normal operations

- Any monitored facility or site boundary where exposure or concentration increases which exceed what historical data and/or analysis show is expected as a result of normal operations

- Any release of radioactive material outside controlled areas

- Any detection of a radionuclide in a sanitary or storm sewer, waste or process stream, or any holding points where such a material is not expected and for which an immediate explanation is not available

- Any controlled, uncontrolled, or accidental release which is not classified as an unusual occurrence but which will be reported to outside agencies in a format other than routine monthly or quarterly reports.

10.3.2 Release of Hazardous Substances/Regulated Pollutants/Oil

Hazardous substances, regulated pollutants, and oil releases are categorized into emergency, unusual occurrence, and off-normal. These categories are further defined as follows (DOE 1990a):

10.3.2.1 Emergency. An emergency under this category is defined as follows:

- Any actual or potential release of material to the environment that results in, or could result in, significant offsite consequences (e.g., need to relocate people, major wildlife kills, wetland degradation, and aquifer contamination, the need to secure downstream water supply intakes, etc.).

10.3.2.2 Unusual Occurrence. An unusual occurrence under this category is defined as follows:

- Release of a hazardous substance that exceeds a reportable quantity and is not federally permitted
- Release of a hazardous substance, regulated pollutant, or oil that violates environmental requirements in permits, regulations, or DOE standards
- Release below emergency levels that requires immediate (<4 h) reporting to regulatory agencies or triggers specification levels for an outside agency
- Any release of 100 gal or more of oil (figure may vary to conform with local requirements).

10.3.2.3 Off-Normal. An off-normal release under this category is defined as follows:

- Release of a hazardous substance or regulated pollutant to controlled or uncontrolled areas that is not part of a normal, monitored release
- Any release of oil less than the unusual occurrence level but >10 gal
- Any detection of a toxic or hazardous substance in a sanitary or storm sewer, waste or process stream, or any holding points where such a material is not expected and for which an immediate explanation is not available
- Any controlled, uncontrolled or accidental release which is not classified as an unusual occurrence but which will be reported to outside agencies in a format other than routine monthly or quarterly reports

- Any controlled release of hazardous/regulated material that occurs as a monitored part of normal operations which exceeds what historical data and/or analysis shows is expected as a result of normal operations

- Any general environmental monitoring where concentration increases to a level which exceeds what historical data and/or analysis shows is expected as a result of normal operations.

10.3.3 Discovery of Radioactive or Hazardous Material Contamination Due to U.S. Department of Energy Operations

Discoveries of radioactive or hazardous material contamination due to DOE operations are categorized into emergency, unusual occurrence, and off-normal. These categories are further defined as follows (DOE 1990a).

10.3.3.1 Emergency. An emergency under this category is defined as follows:

- Discovery of contamination that results, or could result, in significant consequences (i.e., exceeding safe exposure limits to workers or public).

10.3.3.2 Unusual Occurrence. An unusual occurrence under this category is defined as follows:

- Discovery of offsite contamination due to DOE operations which does not represent an immediate threat to the public

- Any discovery of groundwater contamination.

10.3.3.3 Off-Normal. An off-normal discovery under this category is defined as follows:

- Discovery of any onsite contamination attributable to DOE operations.

10.3.4 Ecological Resources

Ecological Resources activities are categorized into unusual occurrence. This category is further defined as follows (DOE 1990a).

10.3.4.1 Unusual Occurrence. An unusual occurrence under this category is defined as follows:

- Any occurrence causing significant impact to any ecological resource for which the DOE is a trustee (i.e., destruction of a critical habitat, damage to a historic/archeological site, damage to wetlands, etc.).

10.3.5 Agreement/Compliance Activities

Agreement/compliance activities are categorized into unusual occurrence and off-normal. These categories are further defined as follows (DOE 1990a).

10.3.5.1 Unusual Occurrence. An unusual occurrence under this category is defined as follows:

- Any agreement, compliance, remediation, or permit-mandated activity for which notification has been received from the relevant regulatory agency that a site plan is not satisfactory or that a site is considered to be in noncompliance with schedules or requirements

- Any occurrence under any agreement or compliance area that requires notification of an outside agency within 4 h or less, or triggers an outside regulatory agency action level, or otherwise indicates specific interest/concern from such agencies.

10.3.5.2 Off-Normal. An off-normal activity under this category is defined as follows:

- Any occurrence under any agreement of compliance area that will be reported to outside agencies in a format other than routine monthly or quarterly reports

- Any changes to existing agreements or permit-mandated activities

- Development of news agreements or permit-mandated activities.

This page intentionally left blank.

11.0 INTERFACE WITH OPERATIONAL ENVIRONMENTAL SURVEILLANCE PROGRAM

11.1 DESCRIPTION

The sitewide Environmental Monitoring Plan (EMP), as described in the FEMP Management Plan (WHC 1991a), consists of two distinct but related components: environmental surveillance conducted by Pacific Northwest Laboratory (PNL) and effluent monitoring conducted by Westinghouse Hanford. The responsibilities for these two portions of the EMP are delineated in a Memorandum of Understanding (PNL and WHC 1989). Environmental surveillance, conducted by PNL, consists of surveillance of all environmental parameters to demonstrate compliance with regulations. Effluent monitoring includes both in-line and facility effluent monitoring as well as near-field (near-facility) operational environmental monitoring. Projected EDEs, reported in this FEMP, are the products of in-line effluent monitoring. Near-field monitoring is required by Part O, "Environmental Monitoring," *Environmental Compliance Manual* (WHC 1988c), and procedures are described in *Operational Environmental Monitoring* (WHC 1988e).

11.2 PURPOSE

The purpose of near-field (operational environmental) monitoring is to determine the effectiveness of environmental controls in preventing unplanned spread of contamination from facilities and sites operated by Westinghouse Hanford for DOE. Effluent monitoring and reporting, monitoring of surplus and waste management units, and monitoring near-field environmental media are, therefore, conducted by Westinghouse Hanford for the purposes of: controlling operations, determining the effectiveness of facility effluent controls, measuring the adequacy of containment at waste transportation and disposal units, detecting and monitoring upset conditions, and evaluating and upgrading effluent monitoring capabilities.

11.3 BASIS

Near-field environmental surveillance is conducted to (1) monitor employee protection; (2) monitor environmental protection; and (3) ensure compliance with local, state, and federal regulations. Compliance with parts of DOE Orders 5400.1, *General Environmental Protection Program* (DOE 1988a); 5400.5, *Radiation Protection of the Public and the Environment* (DOE 1990b); 5484.1, *Protection, Safety, and Health Protection Information Reporting System* (DOE 1981); 5820.2A, *Radioactive Waste Management* (DOE 1988c); and DOE/EH-0173T, *Environmental Regulatory Guide for Radiological Effluent Monitoring and Environmental Surveillance* (DOE 1991), are addressed through this activity.

11.4 MEDIA SAMPLED AND ANALYSES PERFORMED

Procedure protocols for sampling, analysis, data handling, and reporting are specified in WHC-CM-7-4. Media include ambient air, surface water,

groundwater, external radiation dose, soil, sediment, vegetation, and animals at or near active and inactive facilities and/or waste sites. Parameters monitored include the following, as needed: pH, water temperature, radionuclides, radiation exposure, and hazardous constituents. Animals that are not contaminated, as determined by a field instrument survey, are released at the capture location.

11.5 LOCATIONS

Samples are collected from known or suspected effluent pathways (e.g., downwind of potential releases, liquid streams, or proximal to release points). To avoid duplication, Westinghouse Hanford relies upon existing sample locations where PNL has previously established sample sites (e.g., air samplers in the 300 Area). There are 38 air samplers (4 in the 100 Area and 34 in the 200/600 Areas), 35 surface water sample sites (22 in the 100 Area and 13 in the 200/600 Areas), 110 groundwater monitoring wells (20 in the 100 Area, 89 in the 200/600 Areas, and 1 in the 300/400 Areas), 299 external radiation monitor points [182 survey points and 41 thermoluminescent dosimeter (TLD) sites in the 100 Area, 61 TLD sites in the 200/600 Areas, and 15 TLD sites in the 300/400 Areas], 157 soil sample sites (32 in the 100 Area, 110 in the 200/600 Areas, and 15 in the 300/400 Areas), and 95 vegetation sample sites (40 in the 100 Area, 40 in the 200/600 Areas, and 15 in the 300/400 Areas). Animal samples are collected at or near facilities and/or waste sites. Specific locations of sample sites are found in WHC-CM-7-4.

Additionally, surveys to detect surface radiological contamination, scheduled in WHC-CM-7-4, are conducted near and on liquid waste disposal sites (e.g., cribs, trenches, drains, retention basin perimeters, pond perimeters, and ditch banks), solid waste disposal sites (e.g., burial grounds and trenches), unplanned release sites, tank farm perimeters, stabilized waste disposal sites, roads, and firebreaks in the Operations Areas. There are 391 sites in the Operations Areas (100 in the 100 Area, 273 in the 200/600 Areas, and 18 in the 300/400 Areas) where radiological surveys are conducted.

11.6 PROGRAM REVIEW

The near-field operational environmental monitoring program will be reviewed at least annually to determine that the appropriate effluents are being monitored and that the monitor locations are in position to best determine potential releases.

11.7 SAMPLER DESIGN

Sampler design (e.g., air monitors) will be reviewed at least biannually to determine equipment efficiency and compliance with current EPA and industry (e.g. ANSI and ASTM) standards.

11.8 COMMUNICATION

The Operations and Engineering Contractor and the Research and Development Contractor will compare and communicate results of their respective monitoring programs at least quarterly and as soon as possible under upset conditions.

11.9 REPORTS

Results of the near-field operational environmental monitoring program are published in the document series WHC-EP-0145, *Westinghouse Hanford Company Environmental Surveillance Annual Report* (WHC 1989a). The radionuclide values in these reports are expressed in curies, or portions thereof, for each radionuclide per unit weight of sample (e.g., picocuries per gram) or in field instrument values (e.g., counts per minute) rather than EDE, which is calculated as the summation of the products of the dose equivalent received by specified tissues of the body and a tissue-specific weighting factor.

This page intentionally left blank.

12.0 QUALITY ASSURANCE

12.1 PURPOSE

This QA Plan describes the QA requirements associated with implementing the FEMPs. The plan identifies the FEMP activities and assigns the appropriate QA requirements defined by the Westinghouse Hanford *Quality Assurance Manual*, WHC-CM-4-2 (WHC 1989e). This QA Plan shall be consistent with the requirements in DOE 5700.6B, *Quality Assurance* (DOE 1986a). In addition, QA requirements in 40 CFR 60, Appendix A, "Reference Methodologies" shall be considered when performing monitoring calculations and establishing monitoring systems (EPA 1990a).

The QA is required for facilities meeting the criteria for FEMP preparation and implementation. The 40 CFR 61.93 (b)(2)(iv) (EPA 1989c) states that a QA program shall be conducted that meets the performance requirements described in Appendix B, Method 114 of 40 CFR 61. These performance requirements are specified in Appendix B of this document.

12.2 OBJECTIVE

The objective of this chapter is to provide a documented plan describing QA requirements for facilities where FEMPs will be implemented.

12.3 REQUIREMENTS

The WHC-EP-0446, *Quality Assurance Plan For Facility Effluent Monitoring Plan Activities*, was written to specify all QA requirements that apply to field activities, laboratory analyses, and continuous monitoring performed for all FEMPs conducted by Westinghouse Hanford (WHC 1991b). The requirements of this referenced Quality Assurance Project Plan (QAPP) shall be considered in preparing each FEMP.

Table 12-1 lists applicable procedures for implementing the QA requirements identified in this plan. Organizations that support the B Plant must follow current approved procedures to comply with requirements of the plan. Ongoing review and modification of the functional procedures will assure full compliance with the requirements of the QA manual.

Engineering, Safety, QA, and Environmental Protection organizations shall evaluate engineered systems which protect the public, the employees, the environment, and/or operations from radiological and hazardous materials. Their evaluations shall identify areas of significant concern requiring the development of QA verification plans.

QA programs shall be developed and implemented to assess the performance of organizations responsible for the QA plan. Verification methods defined in the planning for FEMP activities, including those associated with equipment or component items, shall undergo inspection, surveillance, and audit in any combination that will confirm compliance with designated requirements.

12.4 FACILITY-SPECIFIC REQUIREMENTS

The QAPP includes a list of analytes of interest and analytical methods for the FEMP activities. This list includes detection limits and precision and accuracy requirements for each analyte. The analytes of interest applicable to B Plant have been identified from this table and are listed in Table 1-2. Procedural controls specific to B Plant are identified in Section 9.0 of this FEMP.

13.0 INTERNAL AND EXTERNAL PLAN REVIEW

DOE Order 5400.1, "General Environmental Protection Program," Chapter IV.4, requires the FEMP be reviewed annually and updated every 3 yr (DOE 1988a). The FEMP should be reviewed and updated, as necessary, after each major change or modification in the facility processes, facility structure, ventilation and liquid collection systems, monitoring equipment, waste treatment, or a significant change to the SARs. As required by EPA regulations, records on the results of radioactive airborne emissions monitoring are maintained by the EPA for the individual facility sites for a period of 5 yr. In addition, the EPA also maintains records on measurement of stack particulates or other nonradioactive hazardous pollutant emissions for a period of 3 yr. Facility Operations Management maintains process control records onsite as a process control aid for a period long enough to serve their useful purpose or a minimum of 3 mo per DOE Order 1324.2A (DOE 1988c).

Facility operators will have to certify on a semiannual basis that no changes in operations that would require new testing have occurred. Although the report is based on the calendar year, the emission limits apply to any period of 12 consecutive months. Westinghouse Hanford Environmental Protection prepares an annual effluent discharge report for each area on the Hanford Site to cover both airborne and liquid release pathways. In addition, a report on the air emissions and compliance to the *Clean Air Act of 1977* (NESHAPs) is prepared by Environmental Protection and submitted to EPA and DOE-Headquarters (EPA 1989c).

Facility management is to obtain the environmental protection function's approval for all changes to the FEMPs, including those generated in the annual review and update. In addition, the FEMP shall be reviewed by QA.

This page intentionally left blank.

7 2 1 2 3 6 8 1 9 3 1

14.0 COMPLIANCE ASSESSMENT

This section presents the conclusions reached from evaluating the effluent monitoring systems in terms of the following:

- Does the system operate within regulatory requirements?
- Do the instrument specifications match up with the characteristics of the effluent streams?
- Is the system capable of responding to upset conditions?
- If there are deficiencies in meeting regulatory compliance, what is needed to reach compliance?

14.1 COMPLIANCE ASSESSMENT COMPARISONS

14.1.1 Comparison of Instrument Specifications with Required Standards

14.1.1.1 Liquid Streams. The only nonradiological monitoring performed on B Plant liquid effluents is for pH. The pH meters employed to monitor B Plant liquid effluents will measure pH in the 1 to 14 pH unit range, which covers the 2.0 to 12.5 pH unit regulatory standard range. Other nonradiological B Plant liquid effluent constituents are not routinely monitored or sampled because the limited insignificant nonradiological source terms.

Radionuclide liquid releases are monitored for gross beta/gamma counts and pH, and discharges are sampled for total alpha, beta, individual isotopes, and pH as required (Table 14-1). Detection limits for monitoring and sampling are adequate to comply with the ACVs listed in WHC-CM-7-5 (WHC 1988c) (Table 14-2). Tables 14-3 through 14-5 contain quantities of regulated constituents, regulatory limits, and the monitoring and/or sampling and analysis performed on the liquid effluent streams.

14.1.1.2 Gaseous Effluents. In-line monitoring instrumentation is generally adequate for process operation control in order to identify potential upset conditions. However, the in-line monitoring instrumentation, in terms of sensitivity and nonspecificity, is not sufficient to meet regulatory requirements under NESHAPs (EPA 1989c); and therefore, continuous sampling and analysis of samples are necessary (see Section 3.3 and Tables 4-8 through 4-12). Subpart H of the proposed NESHAPs requires that radionuclide emissions from the site not cause an EDE to the maximally exposed individual in excess of 10 mrem/yr. Radionuclide emissions from stacks and vents must be monitored at all release points that have the potential to discharge radionuclides in excess of 1% of this standard (i.e., greater than 0.1 mrem/yr). This potential must be based on the discharge that would occur if no engineering control equipment exists. Furthermore, all radionuclides that could contribute greater than 10% of the potential EDE for each release point must be measured. Confirming the necessity for the monitoring, DOE/EH 0173T states, "Airborne emissions from DOE-controlled facilities that have the

Table 14-1. Regulatory Compliance of B Plant Liquid Effluent Stream Monitors.

Parameter	Normal Operating range[a]		Potential upset discharge[b]	Monitor range[c]		Monitor Alarm Point[c]	MDA for sampling/analysis[d]	Regulatory limit[d,g]
	Minimum[e]	Maximum[f]		Minimum	Maximum			
BCP								
pH(pH units)	6.10	9.64	2<>12.5	1	14	4-10	1-14	2.0-12.5
Total beta(µCi/mL)	9.0 E-06	7.1 E-05	8.52 E-01	--	--	--	8.0 E-09	2.0 E-05
^{90}Sr	Batch Sampled	Batch Sampled	2.00 E-03	Batch Sampled	Batch Sampled	Batch Sampled	2.0 E-08	3.0 E-05
^{137}Cs			8.50 E-03				4.0 E-08	3.0 E-05
BCS								
pH(pH units)	4.40	5.12	2<>12.5	Sampled	Sampled	NA	1-14	2.0-12.5
Total beta(µCi/mL)	4.5 E-09	1.3 E-07	2.00 E-07	--	--	--	8.0 E-09	2.0 E-05
^{90}Sr	--	--	2.00 E+01	2.26 E-04	1.28 E+05	5.0 E-04	2.0 E-08	3.0 E-05
^{137}Cs	--	--	8.53 E+03	1.80 E-03	8.58 E+05	3.0 E-05	4.0 E-08	3.0 E-05
BCE								
pH(pH units)	5.22	7.67	2<>12.5	1	14	4-10	1-14	2.0-12.5
Total beta(µCi/mL)	1.2 E-09	3.0 E-09	1.01 E-07	--	--	--	8.0 E-09	2.0 E-05
^{90}Sr	1.2 E-10	2.2 E-10	3.04 E-08	1.68 E-05	1.15 E+04	5.0 E-06	2.0 E-08	3.0 E-05
^{137}Cs	5.0 E-10	3.0 E-09	3.04 E-08	1.44 E-04	1.13 E+05	5.0 E-05	4.0 E-08	3.0 E-05
CBC								
pH(pH units)	5.20	7.94	2<>12.5	1	14	4-10	1-14	2.0-12.5
Total beta(µCi/mL)	2.3 E-09	3.1 E-09	1.2 E-04	4.72 E-05	6.29 E+03	2.0 E-05	8.0 E-09	2.0 E-05
^{90}Sr	1.8 E-10	2.4 E-10	2.03 E-05	4.72 E-05	6.29 E+03	2.0 E-05	2.0 E-08	3.0 E-05
Total gamma(µCi/mL)	NA	NA	--	5.06 E-07	2.45 E+01	5.4 E-06	NA	3.0 E-05
^{137}Cs	NA	NA	--	5.06 E-07	2.45 E+01	5.4 E-06	4.0 E-08	3.0 E-05

[a]Data taken from Tables 8-1 through 8-7.
[b]Data taken from Tables 4-3 through 4-6.
[c]Data taken from Operational Test Reports (OTRs).
[d]Total beta based on ^{90}Sr; total gamma based on ^{137}Cs.
[e]Data taken from Westinghouse Hanford (WHC 1990c, WHC 1990d, WHC 1990a, WHC 1990b).
[f]Data taken from Tables 8-1 through 8-7 as 90% Confidence Interval.
[g]Regulatory limits taken from (WHC 1988c) and DOE Order 5400.5 (DOE 1990b).

Table 14-2. Comparison of Regulatory and Lab Analytical Detection Limits.

Parameter	Analysis basis	Minimum detection limit (µCi/mL)	Regulatory[d] limit (µCi/mL)
Air			
^{90}Sr	Monthly Quarterly	2.0 E-14 7.0 E-15	9.0 E-13
^{137}Cs	Monthly Quarterly	7.0 E-15 2.0 E-15	4.0 E-11
$^{239,240}Pu$	Monthly Quarterly	4.0 E-15 1.0 E-15	2.0 E-15[a]
Water			
Gross alpha	NA	2.0 E-09	6.0 E-08[b]
Gross beta	NA	8.0 E-09	2.0 E-05[c]
^{90}Sr	NA	2.0 E-08	2.0 E-05
$^{239,240}Pu$	NA	5.0 E-09	6.0 E-08

[a]Regulatory limit below lab analytical detection limit.
[b]Based on $^{238,240}Pu$.
[c]Based on ^{90}Sr.
[d]Regulatory limits taken from (WHC 1988c) and (DOE 1990b).

Table 14-3. Comparison of Potential Regulated Constituents, Regulatory Limits, and Monitoring/Sampling Performed for the BCE Stream.

Compound	Quantity (lb)		Regulatory limit (lb)		Monitor	Sample and analysis
	Liquid	Solid	Federal	State		
NaOH	1.13 E+05	2.5 E+05	1,000	220	Yes, pH	Yes, pH
KOH	4.8 E+01	4.7 E+02	1,000	220	Yes, pH	Yes, pH
$NaNO_2$	4.78 E+02	5.5 E+03	100	2.2	N/A	N/A
H_3PO_4	3.85 E+03	6.76 E+03	5,000	220	Yes, pH	Yes, pH
H_2SO_4	7.8 E+02	8.39 E+02	1,000	220	Yes, pH	Yes, pH
HCL	2.2 E+00	6.0 E+00	1,000	220	Yes, pH	Yes, pH

Source: (WHC 1990e).

Table 14-4. Comparison of Potential Regulated Constituents, Regulatory Limits, and Monitoring/Sampling Performed for the CBC Stream.

Compound	Quantity	Regulatory limit		Monitor	Sample and analysis
		Federal	State		
Chemicals (lb)					
$Na_2Cr_2O_7$	1.10 E+0	10		No	No
$NaNO_2$	2.45 E+0	100	2.2	No	No
$Fe(NO_3)_3$	3.08 E+1	1,000		No	No
NaOH	3.03 E+1	1,000	220	Yes, pH	Yes, pH
KOH	5.12 E+0	1,000	220	Yes, pH	Yes, pH
$NaNO_3$	1.10 E+2	1,000		No	No
Radionuclides (μCi/mL)					
^{239}Pu	5.60 E-6	4.00 E-9		Yes, alpha monitor	Yes, total alpha
^{241}Am	3.06 E-7	4.80 E-7		Yes, alpha monitor	Yes, total alpha
^{237}NP	2.34 E-8	1.20 E-9		Yes, alpha monitor	Yes, total alpha
Gross U	1.67 E-2	2.00 E-8		Yes, alpha monitor	Yes, total alpha
^{90}Sr	8.12 E-2	2.00 E-5		Yes, beta monitor	Yes, total beta
^{137}Cs	6.00 E+3	3.00 E-5		Yes, beta monitor	Yes, total beta
$^{106}Ru/Rh$	8.40 E-5	6.00 E-4		Yes, beta monitor	Yes, total beta
$^{144}Ce/Pr$	5.20 E-4	7.00 E-6		Yes, beta monitor	Yes, total beta

Source: (WHC 1990f).

Table 14-5. Comparison of Potential Regulated Constituents, Regulatory Limits, and Monitoring/Sampling Performed for the BCS Stream.

Compound	Quantity	Regulatory limit		Monitor	Sample and analysis
		Federal	State		
Chemicals (lb)					
Na_2Cr_7	1.85 E+1	10		No	No
$Fe(N_3)$	8.50 E-2	1,000		No	No
KOH	1.68 E+2	1,000		Yes, pH	Yes, pH
NHO_3	4.00 E+0	1,000		Yes, pH	Yes, pH
NaOH	5.80 E+3	1,000		Yes, pH	Yes, pH
NF	4.60 E+1	1,000		No	No
$NaNO_2$	3.70 E+2	100		No	No
Radionuclides (μCi/mL)					
^{239}Pu	8.56 E-5	4.00 E-9		Yes, alpha monitor	Yes, total alpha
^{241}Am	4.54 E-5	4.80 E-7		Yes, alpha monitor	Yes, total alpha
^{237}NP	4.12 E-12	1.20 E-9		Yes, alpha monitor	Yes, total alpha
Gross U	1.60 E-13	2.00 E-8		Yes, alpha monitor	Yes, total alpha
^{90}Sr	4.30 E-5	2.00 E-5		Yes, beta monitor	Yes, total beta
^{137}Cs	1.85 E-0	3.00 E-5		Yes, beta monitor	Yes, total beta
$^{106}Ru/Rh$	1.48 E-2	6.00 E-4		Yes, beta monitor	Yes, total beta
$^{144}Ce/Pr$	8.88 E-3	7.00 E-6		Yes, beta monitor	Yes, total beta

[a]Based on a single worst-case discharge of the radionuclide and a flow rate of 2.5×10^6 gal (annually).

Source: (WHC 1990h).

potential for causing doses exceeding 0.1 mrem EDE from emissions in a year shall be monitored in accordance with the requirements of DOE 5400.1 and DOE 5400.5" (DOE 1991).

Tables 4-8 through 4-12 calculate the percent of the offsite regulatory limits to the maximally exposed individual for both pre- and post-control conditions for the B Plant stacks. Based on the information contained in these tables, monitoring of gross alpha and gross beta are insufficient, since regulations require isotope-specific analysis for all isotopes that may contribute greater than 10% of the dose of sites that require monitoring. Additionally, the previous gross alpha analysis was not sensitive enough to determine if regulatory limits are being met or exceeded. Stack 291-B-1 requires sampling and analysis for individual radionuclides based on potential beta emissions. Furthermore, Table 14-2 reveals that the regulatory limit for $^{239,240}Pu$ of 2.0×10^{-15} cannot be met by analysis of even a monthly composite sample because the detection limit for a monthly sample is 4.0×10^{-15}. Therefore, at least 2 to 3 mo of filter data will need to be collected to reach the $^{239,240}Pu$ regulatory limit. Stacks 296-B-10 and 296-B-13 need further evaluation.

A point-by-point evaluation of the *Clean Air Act of 1977* (NESHAPs) (EPA 1989c) requirements is being conducted by the facility at this time and will be incorporated in this document in future revisions.

14.1.2 Comparison of Instrument Specifications with Monitoring Criteria

The primary instrumentation consideration in meeting the sampling/monitoring criteria for the B Plant stack discharges is the ability to measure down to the regulatory limits. The regulatory limits can be measured based upon the best available technology. Detection and regulatory limits are discussed in Section 14.1.1.1. There are no other problems anticipated in meeting the sampling/monitoring criteria for gaseous or liquid effluents.

14.1.3 Comparison of Instrument Specifications with Effluent Characteristics

No major problems were identified in comparing the instrument specifications to the effluent characteristics. Based on the information shown in Table 14-1, the monitoring system will respond to both normal and upset concentrations. The low-end range of the radioactivity monitor on the BCE stream is an exception. Based on data from Table 8-2, the beta concentrations are historically about 3 orders of magnitude (10^{-7} to 10^{-9}) below the potential upset values from Table 14-1. Therefore, an evaluation needs to be performed to determine if the BCE monitor at 2904-EA should be replaced with an instrument with specifications that will detect beta concentrations three orders of magnitude below the normal range of the existing monitor.

14.1.4 Comparison of Projected Effluent Characteristics with Historical Data

A comparison of the projected liquid effluent characteristics (see Tables 4-3 through 4-6) with the historical data (Tables 8-1, 8-3, 8-6, and 8-7) indicates a reasonable agreement with releases during routine operational conditions. Under upset conditions, the potential contaminant concentration varies from greater than 1 to 3 orders of magnitude above the historical record. A few exceptions between projected effluent characteristics and the historical data were noted, primarily among the metals. For example, lead in the BCS stream (Table 8-3) was reported as 5.00 ppb in the historical record; in actuality, three of the four samples analyzed were less than the detection limit of 5.00 ppb, while the fourth was at the detection limit. There is no extraneous source of lead and, as such, no amount occurs as a potential contaminant under upset conditions (Table 4-3). Generally, the exceptions were not significant; and therefore, will not be addressed in great detail.

The projection of gaseous effluent data is essentially the same as the historical record. The identified upset condition would cause the alarm system to react.

14.1.5 Comparison of Effluent Monitoring Capabilities with Regulatory and Contractor Requirements

Routine radiological monitoring and sampling of gaseous effluents consist primarily of only total alpha and beta analyses because the stacks are <0.1 mrem. In accordance with DOE/EH-0173T, those gaseous emission points with the potential to contribute >10% of the offsite dose limits are monitored for specific radionuclides (DOE 1991). Other emission points are monitored for gross alpha and gross beta only. In-line monitoring for gross radioactivity is generally adequate for process operation control for gaseous effluents in order to identify potential upset conditions. However, in-line gross radioactivity monitoring is not sufficient to meet NESHAPs (EPA 1989c) regulatory requirements for the 291-B-1 Stack only; and therefore, continuous sampling and analysis of samples is required.

Liquid effluents are monitored satisfactorily to meet regulatory requirements.

14.2 EXEMPTIONS

There are no identified valid exemptions or pending exemption for the B Plant effluents.

14.3 SYSTEM UPGRADES REQUIRED FOR COMPLIANCE

A summary of the anticipated corrective actions are as follows:

Gaseous Effluents

- Stack 291-B-1 requires routine analysis for specific radionuclides based on potential beta emissions to meet NESHAPS requirements (Section 14.1.1.2 and Table 4-8, Pre-control values).

  The gross alpha laboratory analysis was not sensitive enough to determine whether regulatory limits are being met or exceeded. Table 14-2 revels that the regulatory limit for $^{239,240}Pu$ of 2.0×10^{-15} cannot be met because the monthly detection limit is 4.0×10^{-15}. Values that fall into this category are reported as a less than (see Table 4-8). Therefore, at least 2 to 3 mo of filter data will need to be collected for this stack to determine the actual alpha concentration and compare it to the regulatory limit.

- For the 296-B-5 stack, gross alpha laboratory analysis was not sensitive enough to determine whether regulatory limits are being met or exceeded. Table 14-2 reveals that the regulatory limit for $^{239,240}Pu$ of 2.0×10^{-15} cannot be met because the monthly detection limit is 4.0×10^{-15}. Values that fall into this category are reported as a less than (see Table 4-9). Therefore, at least 2 to 3 mo of filter data will need concentration and compare it to the regulatory limit.

- Because little radionuclide-specific data are available for the 296-B-10 Stack and gross measurements are not sufficient to determine if this stack exceeds 1% of the NESHAPs standard, a radionuclide characterization study is needed to further evaluate this stack. Based on the information contained in Table 4-10, this stack may require radionuclide measurements for potential beta emitters (i.e., ^{137}Cs and ^{90}Y). Therefore, if the characterization study for this stack determines that 1% of the NESHAPs standard may be exceeded, then radionuclide-specific analysis will also be needed for the 296-B-10 Stack.

  In addition, the gross alpha laboratory analysis was not sensitive enough to determine whether regulatory limits are being met or exceeded. Table 14-2 reveals that the regulatory limit for $^{239,240}Pu$ of 2.0×10^{-15} cannot be met because the monthly detection limit is 4.0×10^{-15}. Values that fall into this category are reported as a less than (see Table 4-10). Therefore, at least 2 to 3 mo of filter data must be collected for this stack to determine the actual alpha concentration and compare it to the regulatory limit.

- Because little radionuclide-specific data are available for the 296-B-13 Stack and gross measurements are not sufficient to determine if this stack exceeds 1% of the NESHAPs standard, a radionuclide characterization study is needed to further evaluate this stack. Based on the information contained in Table 4-11, it appears that this stack may require radionuclide measurements for potential beta emitters (i.e., ^{137}Cs, ^{90}Sr, and ^{90}Y). Therefore if

the characterization study for this stack determines that 1% of the NESHAPs standard may be exceeded, then radionuclide-specific analysis will also be needed for the 296-B-13 Stack.

In addition, the gross alpha laboratory analysis was not sensitive enough to determine if regulatory limits are being met or exceeded. Table 4-2 reveals that the regulatory limit for $^{239,240}Pu$ of 2.0×10^{-15} cannot be met because the monthly detection limit is 4.0×10^{-15}. Values that fall into this category are reported as aless than (see Table 4-11). Therefore, at least 2 to 3 mo of filter data will need to be collected for this stack to determine the actual alpha concentration and compare it to the regulatory limit.

- For the 296-B-14 Stack, gross alpha laboratory analysis was not sensitive enough to determine whether regulatory limits are being met or exceeded. Table 14-2 reveals that the regulatory limit for $^{239,240}Pu$ of 2.0×10^{-15} cannot be met because the monthly detection limit is 4.0×10^{-15}. Values that fall into this category are reported as a less than (see Table 4-12). Therefore, at least 2 to 3 mo of filter data will need to be collected for this stack to determine the actual alpha concentration and compare it to the regulatory limit. Collection of these data and an evaluation of this 296-B-14 Stack will be determinate upon the future needs for this stack.

Liquid Effluents

- An evaluation needs to be performed to determine if the BCE monitor at 2904-EA should be replaced with an instrument with specifications that will detect beta concentrations three orders of magnitude below the normal range of the existing monitor (Section 14.1.3).

This page intentionally left blank.

9 2 1 2 3 5 8 1 9 4 1

15.0 SUMMARY AND CONCLUSIONS

Radiological constituents are the primary effluents of concern in B Plant discharges. The major liquid effluents consist of the CBC, BCS, BCE, and BCP, while the major gaseous effluents consist of the 291-B-1, 296-B-5, 296-B-10, 296-B-13, and 296-B-14 Stacks; the gallery exhausters; bulk chemical storage tank vents; and the AMU and scale tank vents.

15.1 LIQUID EFFLUENTS

The liquid effluent monitoring systems respond satisfactorily to both normal and upset radionuclide concentrations. The low-end range of the radioactivity monitor on the BCE stream is an exception. An evaluation is needed to determine if the BCE monitor at 2904-EA should be replaced with an instrument with specifications that will detect beta concentrations three orders of magnitude below the normal range of the existing monitor.

The only nonradiological monitoring parameter for which analyses are routinely performed is pH. However, it is anticipated that any nonradiological contamination of the CBC, BCS, or BCP would also involve radiological contamination; and therefore, monitoring for radiological contamination will serve as an indicator of any potential nonradiological contamination. If radiological contamination is identified, then nonradiological sampling should also be conducted.

Additionally, if spills or upsets occur, sampling should be conducted for any contaminants that have the potential to exceed regulatory limits.

15.2 GASEOUS EFFLUENTS

In-line monitoring instrumentation is generally adequate for process operation control to identify potential upset conditions. However, in-line monitoring instrumentation is not sufficiently sensitive to meet NESHAPs (EPA 1989c) regulatory requirements [i.e., stacks and vents exceeding 1% of the 10 mrem/yr standard must be monitored, and all radionuclides contributing greater than 10% of the total dose from the stack must be measured (see Section 14.1.1.2)].

Routine radiological monitoring/sampling consist primarily of only total alpha and beta analyses. DOE Order 5400.1 states that gross radioactivity measurements are generally unacceptable (DOE 1988a). While the gross alpha, beta, and gamma measurements meet the process monitoring needs, a routine monthly sampling program should be initiated for specific radionuclides of potential concern. Recommendations are stated in Section 14.3.

This page intentionally left blank.

16.0 ATTACHMENTS

16.1 REFERENCES

Aldrich II, L. K., 1991, *Technical Assessment of Compliance with Workplace Air Sampling Requirements-B Plant*, WHC-SD-SQA-TA-20009, Westinghouse Hanford Company, Richland, Washington.

ANSI, 1974, *Specification and Performance of On-Site Instrumentation for Continuously Monitoring Radioactivity in Effluents*, ANSI N42.158, American National Standards Institute, Washington, D.C.

ANSI, 1969, *Guide to Sampling Airborne Radioactive Materials in a Nuclear Facility*, ANSI N13.1, American National Standards Institute, Washington, D.C.

CERCLA, 1980, *Comprehensive Environmental Response, Compensation, and Liability Act of 1980*, as amended, Public Law 96-510, 94 Statute 2767, 42 USC 9601, et al.

Clean Water Act of 1977, as amended, Public Law 95-217, 92 Statute 1566, 33 USC 1251.

DOE, 1981, *Environmental Protection, Safety, and Health Protection Information Reporting Requirements*, DOE Order 5484.1, U.S. Department of Energy, Washington, D.C.

DOE, 1986a, *Quality Assurance*, DOE Order 5700.6B, U.S. Department of Energy, Washington, D.C.

DOE, 1986b, *Test Methods for Evaluating Solid Wastes*, SW-846, Office of Solid Waste and Emergency Response, Washington D.C.

DOE, 1988a, *General Environmental Protection Program*, DOE Order 5400.1, U.S. Department of Energy, Washington D.C.

DOE, 1988b, *Radiation Protection for Occupational Workers*, DOE Order 5480.11, U.S. Department of Energy, Washington, D.C.

DOE, 1988c, *Radioactive Waste Management*, DOE Order 5820.2A, U.S. Department of Energy, Washington D.C.

DOE, 1988d, *Records Disposition*, DOE Order 1324.2A, U.S. Department of Energy, Washington, D.C.

DOE, 1989, *United States Department of Energy-Richland Operations Office Environmental Protection Implementation Plan*, Richland, Washington.

DOE, 1990a, *Occurrence Reporting and Processing of Operations Information*, DOE Order 5000.3A, U.S. Department of Energy, Washington D.C.

DOE, 1990b, *Radiation Protection of the Public and the Environment*, DOE Order 5400.5, U.S. Department of Energy, Washington, D.C.

DOE, 1991, *Environmental Regulatory Guide for Radiological Effluent Monitoring and Environmental Surveillance*, DOE/EH-0173T, U.S. Department of Energy, Washington, D.C.

EPA, 1986, *Test Methods for Evaluating Solid Waste: Physical/Chemical Methods*, SW-846, Third Edition, U.S. Environmental Protection Agency, Office of Solid Waste and Emergency Response, Washington, D.C.

EPA, 1987, *Emergency Planning and Notification*, Title 40, Code of Federal Regulations, Part 355, U.S. Environmental Protection Agency, Washington, D.C.

EPA, 1988, *Comprehensive Environmental Response, Compensation, and Liability Act*, Title 40, Code of Federal Regulations, Part 302, U.S. Environmental Protection Agency, Washington, D.C.

EPA, 1989a, *Designation, Reportable Quantities, and Notification*, Title 40, Code of Federal Regulations, Part 302, U.S. Environmental Protection Agency, Washington, D.C.

EPA, 1989b, *Identification and Listing of Hazardous Waste*, Title 40, Code of Federal Regulations, Part 261, U.S. Environmental Protection Agency, Washington, D.C.

EPA, 1989c, *National Emission Standards for Hazardous Air Pollutants*, Title 40, Code of Federal Regulations, Part 61, U.S. Environmental Protection Agency, Washington D.C.

EPA, 1989d, *National Primary Drinking Water Regulations*, Part 141, as amended, U.S. Environmental Protection Agency, Washington, D.C.

EPA, 1990a, *Quality Assurance Methods*, Title 40, Code of Federal Regulations, Part 60, U.S. Environmental Protection Agency, Washington, D.C.

EPA, 1990b, "Subchapter N--Effluent Guidelines and Standards," Title 40, Code of Federal Regulations Parts 401-471, U.S. Environmental Protection Agency, Washington, D.C.

PNL and WHC, 1989, *Memorandum of Understanding*, Battelle - Pacific Northwest Laboratory and Westinghouse Hanford Company, Richland, Washington.

RHO, 1984, *Waste Encapsulation and Storage Facility Heating, Ventilation, and Air Conditioning System Flowsheet*, PFD-E-006-00001, Rockwell Hanford Operations, Richland, Washington.

RHO, 1985a, *Environmental Protection Manual*, RHO-MA-139, Rockwell Hanford Operations, Richland, Washington.

RHO, 1985b, *Waste Encapsulation and Storage Facility Safety Analysis Report*, SD-WM-SAR-005, Rockwell Hanford Operations, Richland, Washington.

RHO, 1986, *B Plant Safety Analysis Report*, SD-WM-SAR-013, Rockwell Hanford Operations, Richland, Washington.

WAC, 1976, *General Regulations of Air Pollution*, Washington Administrative Code 173-400, Olympia, Washington.

WAC, 1988, *National Pollutants Discharge Elimination System Permit Program*, Washington Administrative Code 173-220, Olympia, Washington.

WAC, 1989, *Dangerous Waste Regulations*, Washington Administrative Code 173-303, Washington State Department of Ecology, Olympia, Washington.

Washington Clean Air Act of 1967, RCW 70.94, Revised Code of Washington, Olympia, Washington.

WHC, 1988a, *200 Area Support Services Manual*, WHC-CM-8-2, 1988, Westinghouse Hanford Company, Richland, Washington.

WHC, 1988b, *B Plant Operations Administration*, WHC-CM-5-6, Westinghouse Hanford Company, Richland, Washington.

WHC, 1988c, *Environmental Compliance Manual*, WHC-CM-7-5, Westinghouse Hanford Company, Richland, Washington.

WHC, 1988d, *Laboratories Administration*, WHC-CM-5-4, Westinghouse Hanford Company, Richland, Washington.

WHC, 1988e, *Operational Environmental Monitoring*, WHC-CM-7-4, Westinghouse Hanford Company, Richland, Washington.

WHC, 1989a, *200 Area Westinghouse Hanford Environmental Surveillance Annual Report*, WHC-EP-0145-2, Westinghouse Hanford Company, Richland, Washington.

WHC, 1989b, *Analytical Chemistry Services Laboratory Quality Assurance Manual*, WHC-SD-CD-QAPP-001, Westinghouse Hanford Company, Richland, Washington.

WHC, 1989c, *B Plant Preliminary Accident Analysis*, SD-WM-TI-385, Revision 0, Westinghouse Hanford Company, Richland, Washington.

WHC, 1989d, *Management Regulations and Procedures*, WHC-CM-1-3, Revision 0, Westinghouse Hanford Company, Richland, Washington.

WHC, 1989e, *Quality Assurance Manual*, WHC-CM-4-2, Westinghouse Hanford Company, Richland, Washington.

WHC, 1989f, *Waste Stream Characterization Report*, WHC-EP-0275, Revision 2, Westinghouse Hanford Company, Richland, Washington.

WHC, 1990a, *B Plant Chemical Sewer Stream-Specific Report*, WHC-EP-0342, Addendum 6, Westinghouse Hanford Company, Richland, Washington.

WHC, 1990b, *B Plant Cooling Water Stream-Specific Report*, WHC-EP-0342, Addendum 22, Westinghouse Hanford Company, Richland, Washington.

WHC, 1990c, *B Plant Process Condensate Stream-Specific Report*, WHC-EP-0342, Addendum 17, Westinghouse Hanford Company, Richland, Washington.

WHC, 1990d, *B Plant Steam Condensate Stream-Specific Report*, WHC-EP-0342, Addendum 16, Westinghouse Hanford Company, Richland, Washington.

WHC, 1990e, *Effluent Monitoring Plan for the B Plant Chemical Sewer*, WHC-SD-WM-EMP-028, Westinghouse Hanford Company, Richland, Washington.

WHC, 1990f, *Effluent Monitoring Plan for the B Plant Cooling Water*, WHC-SD-WM-EMP-029, Westinghouse Hanford Company, Richland, Washington.

WHC, 1990g, *Effluent Monitoring Plan for the B Plant Process Condensate (BCP)*, WHC-SD-WM-EMP-030, Westinghouse Hanford Company, Richland, Washington.

WHC, 1990h, *Effluent Monitoring Plan for the B Plant Steam Condensate*, WHC-SD-WM-EMP-027, Westinghouse Hanford Company, Richland, Washington.

WHC, 1990i, *Westinghouse Hanford Company Effluent Discharges and Solid Waste Management Report for Calendar Year 1989*: 200/600 Areas, WHC-EP-0141-2, Westinghouse Hanford Company, Richland, Washington.

WHC, 1991a, *FEMP Management Plan*, WHC-EP-0491, Westinghouse Hanford Company, Richland, Washington.

WHC, 1991b, *Quality Assurance Project Plan for Facility Effluent Monitoring Plan Activities*, WHC-EP-0446, Westinghouse Hanford Company, Richland, Washington.

APPENDIX A

NEED FOR B PLANT FACILITY EFFLUENT MONITORING PLAN

This page intentionally left blank.

Westinghouse Hanford Company

Internal Memo

From: B Plant Engineering
Phone: 3-2445 S6-70
Date: December 13, 1990
Subject: NEED FOR B PLANT FACILITY EFFLUENT MONITORING PLAN

85150-90-MMP-022

To: Distribution

cc: W. W. Bowen S6-65
M. L. Grygiel S6-65
L. Jenson T6-18
K. A. Peterson S6-70
D. R. Pratt T1-30
M. W. Stevenson S6-70
R. D. Weissenfels S6-70
MMP:MWS File/LB

References:
(1) WHC-SD-WM-EMP-027, "Effluent Monitoring Plan for the B Plant Steam Condensate," dated October 7, 1990.
(2) WHC-SD-WM-EMP-028, "Effluent Monitoring Plan for the B Plant Chemical Sewer," dated October 7, 1990.
(3) WHC-SD-WM-EMP-029, "Effluent Monitoring Plan for the B Plant Cooling Water," dated February 22, 1990.
(4) WHC-SD-WM-EMP-030, "Effluent Monitoring Plan for the B Plant Process Condensate (BCP)," dated January 25, 1990.

This letter provides WHC Environmental Protection (EP) the Facility Effluent Monitoring Plan (FEMP) determination for B Plant. B Plant Environmental Engineering has determined that a FEMP is required for B Plant.

The FEMP determination is not necessary for B Plant's liquid streams. Previous analysis has determined that the "inventory at risk" for liquid effluents would be much higher than the FEMP determination limit in the unlikely event of an accident condition.

In addition, the FEMP determination was also pre-determined for non-radioactive, hazardous gaseous "inventory at risk." Without analysis, B Plant contains hazardous constituents that exceed the limits of 40 CFR 302.4, though engineering controls have been installed to prevent discharge of these materials.

The FEMP determination forms for both radioactive and hazardous discharges for liquid streams as well as hazardous components for gaseous streams are attached and marked appropriately.

However, in support of EP's ongoing negotiation with the Environmental Protection Agency (EPA) regarding compliance with National Emission Standards for Emissions of Radionuclides (40 CFR 61 Subpart H), B Plant will provide the necessary radiological data and projections for gaseous effluents. The necessary data is attached.

Introduction

As a basis for this determination for liquid streams, B Plant requests that EP refer to the current liquid FEMPs (refs 1-4). EP should note that though historical discharges are within environmental limits, the radionuclide "inventory at risk" documented in each of these FEMP exceeds the Derived Concentration Guidelines (DCGs). In addition, the non-radioactive hazardous materials listed in any one of these FEMP's are above the reportable quantities in 40 CFR 302.4 though engineering controls prevent these discharges. Therefore, B Plant is required to issue a FEMP for all liquid streams liquid streams.

Though a similar result is indicated for gaseous effluents, historical data and projected radionuclide "inventory at risk" are attached in support of EP's on going negotiations with the EPA.

Summary of Gaseous Effluents

With the assistance of the 222-S Labs Statisticians, B Plant Environmental Engineering has completed an evaluation of the five B Plant/WESF stacks to determine the expected emissions during NCAW processing. This evaluation used 1983 and 1984 historical emissions data as a basis, since these were the last two years of processing.

The study determined that there was no correlation between alpha and beta emissions for gaseous streams and the following parameters:

1. Stack Flow Rate
2. Facility Radionuclide Inventory
3. The month (time of year)

Since no statistical correlations exist for the above parameters, it is expected that the alpha and beta emissions will be similar to the 1983 and 1984 data.

These projections represent a conservative (high) estimation for B Plant emission during future processing and a very conservative estimation for its present extended maintenance outage. A summary of the data is presented in the attached table (Attachment 1).

Discussion of Data

The preliminary data is presented in the three tables attached and will follow under a separate cover in the near future.

Attachment 1 is the 1983 and 1984 mean monthly discharges which are well within discharge limits and statistical confidence levels for each figure. It should be noted that the alpha emissions for three of the stacks were considered less than detectable, since both (two) positive data points were within roundoff error of the lower deductibility limit.

Attachment 2 is the expected emissions based on the historical mean values in attachment 1. The emissions are expected to be well within environmental discharge limits. As stated above, in the evaluation performed, no correlation was found to exist between the above noted parameters.

Attachment 3 is the potential emissions if the existing engineering controls were not in place to mitigate such release. These were calculated using the following assumptions:

1. HEPA filter banks have a minimum efficiency of 99.95% as required, therefore a scaling factor of 2000 was used in calculating the result of failed HEPA filters as suggested by EP.
2. Beta-gamma emissions consist of 30% Cs, 30% Ba, 20% Sr, 20% Y as proposed in B Plant's draft Low Level Waste Certification Plan and as confirmed by sampling.
3. Alpha emissions consist of 77% Pu-239 and 23% Am as determined by 1989 sampling.

If you have any question please contact me on 3-2445.

M. M. Pereira, Engineer
B Plant Environmental Eng.

M. L. Grygiel
B Plant Manager

L. P. Diediker
Environmental
Protection Manager

kb

Attachments 4

This page intentionally left blank.

ATTACHMENT 1

ALPHA AND BETA EMISSIONS FOR THE FIVE B PLANT/WESF STACKS (1983 through 1984).

Stack	291-B-1		296-B-5		296-B-10		296-B-13		296-B-14	
	Alpha	Beta	Alpha	Beta	Alpha	Beta	Alpha	Beta	Alpha	Beta
Mean Value MCi/month	3.48 E-13	1.41 E-09	(e)	9.84 E-14	(e)	1.37 E-10	(e)	2.67 E-14	1.30 E-15	7.40 E-13
Standard Deviation or s MCi/month	2.82 E-13	4.38 E-09	(e)	9.35 E-14	(e)	5.18 E-10	(e)	1.94 E-14	2.10 E-16	2.66 E-12
t (a)	2.18	2.07	(e)	2.20	(e)	2.13	(e)	2.20	2.78	2.16
n (b)	13	24	(e)	12	(e)	16	(e)	12	5	14
L95%CI (d) MCi/month	1.78 E-13	4.37 E-10 (c)	(e)	3.90 E-14	(e)	1.39 E-10 (c)	(e)	1.44 E-14	1.04 E-15	7.97 E-13 (c)
U95%CI (d) MCi/month	5.19 E-13	3.26 E-09	(e)	1.58 E-13	(e)	4.13 E-10	(e)	3.91 E-14	1.56 E-15	2.28 E-12

Footnotes:

(a) value from student's t test for the 95% confidence interval.
(b) number of data points.
(c) indicates a negative value for the number.
(d) the lower (L) and upper (U) 95% confidence interval. x (+or-) t (s/SQRT(n).
(e) indicates that the values were below the detection limits, however, the following assumptions also apply.

296-B-5 - one value slightly exceeded the detection limit of 8.0 E-15, but was considered suspect data.

296-B-10 - one value slightly exceeded the detection limit of 9.0 E-14, but was considered suspect data.

296-B-13 - all values were less than the detectable limit.

ATTACHMENT 2

Projected Emissions Based on the Mean Value of Attachment 1.

Stack	Alpha (Ci/year)	Beta (Ci/year)
291-B-1	4.18 E-06	1.69 E-02
296-B-5	< Detectable	1.18 E-06
296-B-10	< Detectable	1.60 E-03
296-B-13	< Detectable	3.20 E-07
296-B-14	1.56 E-08	8.88 E-06

ATTACHMENT 3

Potential Emissions - Assuming no Filtration (2 sheets)

STACK (alpha or beta)	QUANTITY RELEASED (HISTORICAL) (CI/YEAR)	POTENTIAL RELEASE WITH NO FILTRATION (CI/YEAR)	TYPE	CI/YEAR	POTENTIAL DOSE IF UNFILTERED (mrem/yr)	TOTALS (mrem/yr)
291-B-1 (ALPHA)	4.18 E-06	8.36 E-03	^{239}Pu	6.44 E-03	1.53 E-02	
			^{241}Am	1.92 E-03	6.89 E-03	
219-B-1 (beta-gamma)	1.69 E-02	33.8	^{137}Cs	10.1	1.32 E-01	
			^{137}Ba	10.1	INCLUDED ABOVE	
			^{90}Sr	6.76	1.62 E-01	
			^{90}Y	6.76	INCLUDED ABOVE	3.17 E-01
296-B-5 (beta-gamma)	1.18 E-06	2.36 E-03	^{137}Cs	7.08 E-04	1.05 E-04	
			^{137}Ba	7.08 E-04	INCLUDED ABOVE	
			^{90}Sr	4.72 E-04	INCLUDED ABOVE	
			^{90}Y	4.72 E-04	INCLUDED ABOVE	1.05 E-04
296-B-10 (beta-gamma)	1.60 E-03	3.2	^{137}Cs	0.96	3.04 E-02	
			^{137}Ba	0.96	INCLUDED ABOVE	
			^{90}Sr	0.64	INCLUDED ABOVE	
			^{90}Y	0.64	INCLUDED ABOVE	3.02 E-02
296-B-13 (beta-gamma)	3.20 E-07	6.40 E-04	^{137}Cs	1.92 E-04	2.63 E-05	
			^{137}Ba	1.92 E-04	INCLUDED ABOVE	
			^{90}Sr	1.28 E-04	INCLUDED ABOVE	
			^{90}Y	1.28 E-04	INCLUDED ABOVE	2.63 E-05
296-B-14 (alpha)	1.56 E-08	3.12 E-05	^{239}Pu	2.40 E-05	2.08 E-04	
			^{241}Am	7.17 E-06	9.39 E-05	
(beta-gamma)	8.88 E-06	1.78 E-02	^{137}Cs	5.32 E-03	7.08 E-04	
			^{137}Ba	5.32 E-03	INCLUDED ABOVE	

ATTACHMENT 3

Potential Emissions - Assuming no Filtration (2 sheets)

STACK (alpha or beta)	QUANTITY RELEASED (HISTORICAL) (CI/YEAR)	POTENTIAL RELEASE WITH NO FILTRATION (CI/YEAR)	TYPE	CI/YEAR	POTENTIAL DOSE IF UNFILTERED (mrem/yr)	TOTALS (mrem/yr)
			^{241}Am	7.17 E-06	9.39 E-05	
(beta-gamma)	8.88 E-06	1.78 E-02	^{137}Cs	5.32 E-03	7.08 E-04	
			^{137}Ba	5.32 E-03	INCLUDED ABOVE	
			^{90}Sr	3.57 E-03	INCLUDED ABOVE	
			^{90}Y	3.57 E-03	INCLUDED ABOVE	1.08 E-03
					Grand Total	3.56E-01

ATTACHMENT 1 - EXAMPLE

DETERMINATION OF FACILITY EFFLUENT
MONITORING PLAN REQUIREMENT

FACILITY B Plant DISCHARGE POINT Gaseous Effluents as listed on cover

FACILITY INVENTORY AT RISK OF RADIOACTIVE MATERIALS

Radionuclide Dose	Physical/Chemical Form	Quantity (Curies)	Quantity Released	Projected (mrem)
1. WHC-SD-WM-EMP-027 dated October 7, 1990				
2. WHC-SD-WM-EMP-028 dated October 7, 1990				
3. WHC-SD-WM-EMP-029 dated February 22, 1990				
4. WHC-SD-WM-EMP-030 dated January 25, 1990				
Total				

FACILITY INVENTORY AT RISK OF NONRADIOACTIVE HAZARDOUS MATERIALS

Regulated Material	Quantity (lbs)	Quantity Released	Reportable Quantity (lbs)	% of Reportable Quantity/Year
1. See Cover Letter				
2. See Cover Letter				
3. See Cover Letter				
4. See Cover Letter				

Identification of Reference Material

If the total projected dose from radionuclides exceeds 0.1 mrem ede from any one discharge point or if any one regulated material discharged from a facility exceeds 100% of a reportable quantity or a permitted quantity, a FEMP is required for that facility. Check the appropriate space below.

FEMP is required X FEMP is not required ____

EVALUATOR M. M. Pereira signed on cover DATE ____

MANAGER, ENVIRONMENTAL L. P. Diediker signed on cover DATE ____

FACILITY MANAGER M. L. Grygiel signed on cover DATE ____

ATTACHMENT 1 - EXAMPLE

DETERMINATION OF FACILITY EFFLUENT
MONITORING PLAN REQUIREMENT

FACILITY B Plant DISCHARGE POINT Liquid Effluents as listed on cover

FACILITY INVENTORY AT RISK OF RADIOACTIVE MATERIALS

	Radionuclide Dose	Physical/Chemical Form	Quantity (Curies)	Quantity Released	Projected (mrem)
1.	WHC-SD-WM-EMP-027, dated October 7, 1990				
2.	WHC-SD-WM-EMP-028, dated October 7, 1990				
3.	WHC-SD-WM-EMP-029, dated February 22, 1990				
4.	WHC-SD-WM-EMP-030, dated January 25, 1990				
Total					

FACILITY INVENTORY AT RISK OF NONRADIOACTIVE HAZARDOUS MATERIALS

	Regulated Material	Quantity (lbs)	Quantity Released	Reportable Quantity (lbs)	% of Reportable Quantity/Year
1.	See Cover Letter				
2.	See Cover Letter				
3.	See Cover Letter				
4.	See Cover Letter				

Identification of Reference Material

If the total projected dose from radionuclides exceeds 0.1 mrem ede from any one discharge point or if any one regulated material discharged from a facility exceeds 100% of a reportable quantity or a permitted quantity, a FEMP is required for that facility. Check the appropriate space below.

FEMP is required X FEMP is not required ____

EVALUATOR M. M. Pereira, signed on cover DATE ____

MANAGER, ENVIRONMENTAL L. P. Diediker, signed on cover DATE ____

FACILITY MANAGER M. L. Grygiel, signed on cover DATE ____

APPENDIX B

PERCENT DECONTAMINATION CALCULATIONS FOR LIQUID STREAMS

PERCENT DECONTAMINATION CALCULATIONS FOR LIQUID STREAMS

$$Percent\ Decontamination = \frac{PA - (PC - SA)}{PA} \times 100$$

where: *PA = Potential contaminant amount*
PC = Post-control amount
SA = Input source amount

Note: Actual values for some input source amounts were not available; therefore, they were conservatively assumed to be 0.00E+00.

Table 4-3. Calculations

$$Gross\ \beta = \frac{0.41 - (0.143 - 0.00917)}{0.41} \times 100 = 67.4\% \quad (1)$$

$$\text{Potassium (K)} = \frac{2.40E{+}07 - (2.05E{+}05 - 1.63E{+}06)}{2.40E{+}07} \times 100 = \frac{2.5425E{+}09}{2.40E{+}07} = 105.9\% \quad (2)$$

$$\text{Sodium (Na)} = \frac{7.55E{+}08 - (3.84E{+}05 - 4.64E{+}06)}{7.55E{+}08} \times 100 = \frac{7.5926E{+}10}{7.55E{+}08} = 100.6\% \quad (3)$$

$$\text{Nitrate } (NO_3) = \frac{3.69E{+}09 - (1.88E{+}06 - 2.04E{+}06)}{3.69E{+}09} \times 100 = \frac{3.6902E{+}11}{3.69E{+}09} = 100.0\% \quad (4)$$

Table 4-4. Calculations

$$\text{Sr-90} = \frac{6.92 - (6.20E-05 - 3.05E-04)}{6.92} \times 100 = \frac{6.9202E+02}{6.92} = 100.0\% \quad (1)$$

$$\text{Lead (Pb)} = \frac{1.79E+07 - (1.87E+03 - 0.00E+00)}{1.79E+07} \times 100 = \frac{1.7898E+09}{1.79E+07} = 99.99\% \quad (2)$$

$$\text{Iron (Fe)} = \frac{3.30E+07 - (1.19E+04 - 2.17E+04)}{3.30E+07} \times 100 = \frac{3.301E+09}{3.30E+07} = 100.0\% \quad (3)$$

$$\text{Potassium (K)} = \frac{1.62E+09 - (2.52E+05 - 2.71E+5)}{1.62E+09} \times 100 = \frac{1.62E+11}{1.62E+09} = 100.0\% \quad (4)$$

$$\text{Sodium (Na)} = \frac{2.88E+10 - (7.02E+05 - 7.70E+05)}{2.88E+10} \times 100 = \frac{2.88E+12}{2.88E+10} = 100.0\% \quad (5)$$

$$\text{Nitrate } (NO_3) = \frac{5.79E+10 - (1.70E+05 - 3.39E+05)}{5.79E+10} \times 100 = \frac{5.79E+12}{5.79E+10} = 100.0\% \quad (6)$$

$$\text{Sulfate } (SO_4) = \frac{4.97E+09 - (3.51E+06 - 5.45E+06)}{4.97E+09} \times 100 = \frac{4.9719E+11}{4.97E+09} = 100.0\% \quad (7)$$

Table 4-5. Calculations

$$\text{Gross } \alpha = \frac{1.69E+03 - (7.43E-03 - 2.01E-03)}{1.69E+03} \times 100 = \frac{1.68E+05}{1.69E+03} = 100.0\% \quad (1)$$

$$\text{Gross } \beta = \frac{2.69E+07 - (5.52E+01 - 1.02E-02)}{2.69E+07} \times 100 = \frac{2.69E+09}{2.69E+07} = 100.0\% \quad (2)$$

$$\text{Sr-90} = \frac{8.54E+04 - (1.07E+03 - 0.00E+00)}{8.54E+04} \times 100 = \frac{8.433E+06}{8.54E+04} = 98.75\% \quad (3)$$

$$\text{Cs-137} = \frac{2.69E+07 - (9.35E+01 - 0.00E+00)}{2.69E+07} \times 100 = \frac{2.6900E+09}{2.69E+09} = 100.0\% \quad (4)$$

$$\text{Nitrate } (NO_3) = \frac{5.65E+09 - (2.84E+07 - 3.15E+07)}{5.65E+04} \times 100 = \frac{5.6531E+11}{5.65E+09} = 100.05\% \quad (5)$$

Table 4-6. Calculations

$$\text{Gross } \alpha = \frac{4.22E+00 - (2.31E-03 - 3.68E-03)}{4.22E+00} \times 100 = \frac{4.2214E+02}{4.22E+00} = 100.03\% \quad (1)$$

$$\text{Gross } \beta = \frac{4.22E-01 - (9.08E-03 - 1.86E-02)}{4.22E-01} \times 100 = \frac{4.3152E+01}{4.22E-01} = 102.3\% \quad (2)$$

Table 4-6. Calculations (continued)

$$\text{Sr-90} = \frac{1.27E-01 - (6.00E-04 - 0.00E+00)}{1.27E-01} \times 100 = \frac{1.26E+01}{1.27E-01} = 99.53\% \quad (3)$$

$$\text{Pu-238,240} = \frac{3.29E+00 - (7.49E-02 - 0.00E+00)}{3.29E+00} \times 100 = \frac{3.2151E+02}{3.29E+00} = 97.72\% \quad (4)$$

$$\text{Cs-137} = \frac{1.29E-01 - (4.62E-03 - 0.00E+00)}{1.27E-01} \times 100 = \frac{12.238}{0.127} = 96.36\% \quad (5)$$

$$\text{Potassium (K)} = \frac{1.51E+10 - (2.67E+06 - 2.27E+04)}{1.51E+10} \times 100 = \frac{1.5097E+12}{1.51E+10} = 99.98\% \quad (6)$$

$$\text{Sodium (Na)} = \frac{3.15E+13 - (6.02E+08 - 1.29E+06)}{3.15E+13} \times 100 = \frac{3.1499E+15}{3.15E+13} = 100.0\% \quad (7)$$

$$\text{Nitrate } (NO_3) = \frac{2.13E+12 - (7.57E+06 - 5.65E+05)}{2.13E+12} \times 100 = \frac{2.1300E+14}{2.13E+12} = 100.0\% \quad (8)$$

Table 4-6. Calculations (continued)

$$\text{Sulfate } (SO_4) = \frac{2.39E{+}11 - (3.70E{+}07 - 9.54E{+}06)}{2.39E{+}11} \times 100 = \frac{2.3897E{+}13}{2.39E{+}11} = 99.99\% \tag{9}$$

$$\text{Chloride } (Cl_2) = \frac{3.29E{+}11 - (5.14E{+}05 - 1.73E{+}06)}{3.29E{+}11} \times 100 = \frac{3.2900E{+}13}{3.29E{+}11} = 100.0\% \tag{10}$$

DISTRIBUTION

Number of Copies		
OFFSITE		
3	Westinghouse Idaho Nuclear Company PO Box 4000 Idaho Falls, Idaho 83403	
	K. Kouri	32-02
ONSITE		
7	U.S. Department of Energy Field Office, Richland	
	G. M. Bell	A5-52
	R. F. Brich	A5-55
	S. S. Clark	A6-55
	E. B. Dagan	A5-19
	L. A. Huffman	A6-55
	S. D. Stites	A5-19
	Public Reading Room	A1-65
1	Hanford Environmental Health Foundation	
	L. J. Maas	B2-75
1	Kaiser Engineers Hanford	
	P. G. Bodily	E2-10
7	Pacific Northwest Laboratory	
	W. J. Bjorklund	P7-68
	T. D. Chikalla	P7-75
	R. E. Jaquish	K1-30
	D. L. Klages	P7-68
	A. K. Stalker	P7-60
	R. K. Woodruff	K6-13
	Technical Files	K1-11
91	Westinghouse Hanford Company	
	S. E. Albin	T1-06
	S. M. Anthony	N3-05
	J. A. Bates	B2-19
	R. J. Bliss	B3-04
	R. E. Bolls	N3-13
	W. W. Bowen	S6-65

DISTRIBUTION (continued)

Number of Copies

ONSITE

Westinghouse Hanford Company (continued)

J. R. Brehm	R2-77
S. L. Brey	T6-12
J. D. Briggs	T6-14
M. J. Brown	T1-30
G. D. Carpenter	B2-16
G. J. Carter	T1-06
L. P. Diediker (2)	T1-30
J. J. Dorian	B2-16
J. A. Eacker	R1-51
R. G. Egge	R2-77
B. G. Erlandson	B2-19
D. G. Farwick	H4-16
K. A. Gano	X0-21
L. A. Garner	T5-54
E. M. Greager	L6-60
K. A. Hadley	N1-35
N. S. Hale	B4-53
M. J. Hall	B2-19
J. W. Handy	B2-19
D. R. Herman	S4-01
K. R. Jordan	B3-51
E. J. Kosiancic	S0-61
R. J. Landon	B2-19
R. E. Lerch	B2-35
G. J. Miskho	R2-50
R. J. Murkowski	S6-65
J. M. Nickels (38)	T1-30
M. K. Oldfield	R1-08
R. A. Paasch	B2-20
K. A. Peterson (3)	S6-70
D. R. Pratt	T1-30
M. W. Stevenson	S6-70
R. J. Thompson	S6-01
R. R. Thompson	L4-88
L. W. Vance	H4-16
G. E. Vansickle	R2-81
D. J. Watson	X0-41
B. F. Weaver	T3-11
C. D. Wollam	S6-19
Document Processing and Distribution (2)	L8-15
Central Files	L8-04
Information Release Administration (3)	R1-08