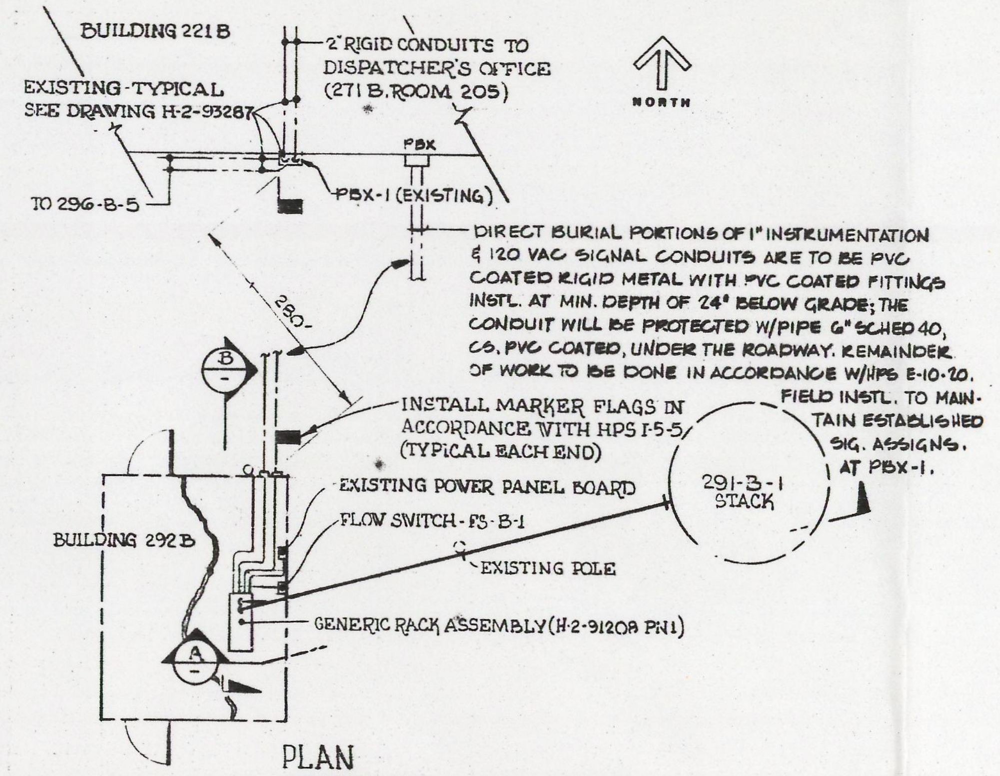

PLAN
SCALE: 1/8"=1'0"

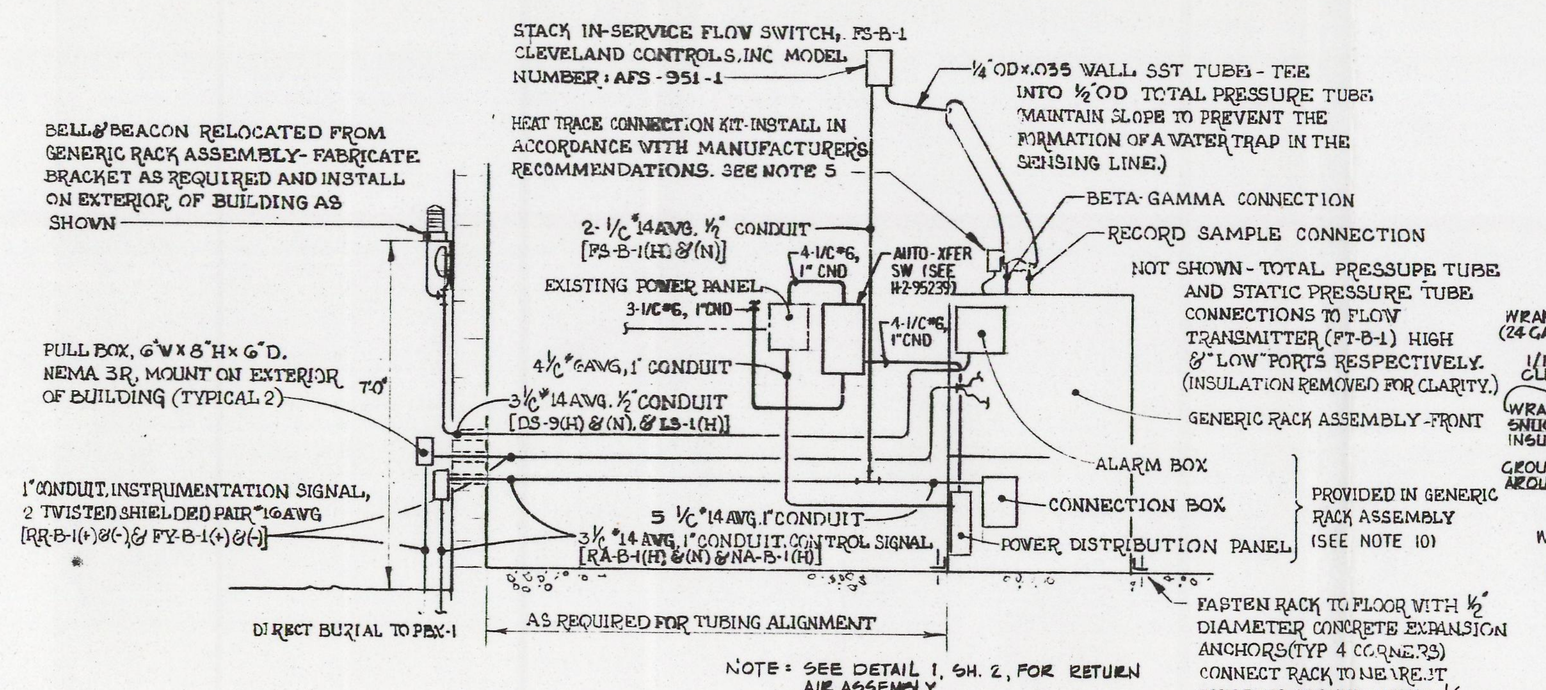

ELEVATION (B)
SCALE: 1/2"=1'-0"

CERTIFIED VENDOR INFORMATION

REF DWG	TAG NO	DESCRIPTION	CVI NO
H-2-94158, SH 2 ↓	FI-B-1	FLOW INDICATOR	#21412
	FQI-B-1	FLOW TOTALIZER INDICATOR	#21413
	FY-B-1	FLOW COMPUTER	#21414
	FQ-B-1	FLOW INTEGRATOR	#21415
H-2-94158, SH 1 ↓	FS-B-1	FLOW SWITCH	#21416
		HEAT TRACE	

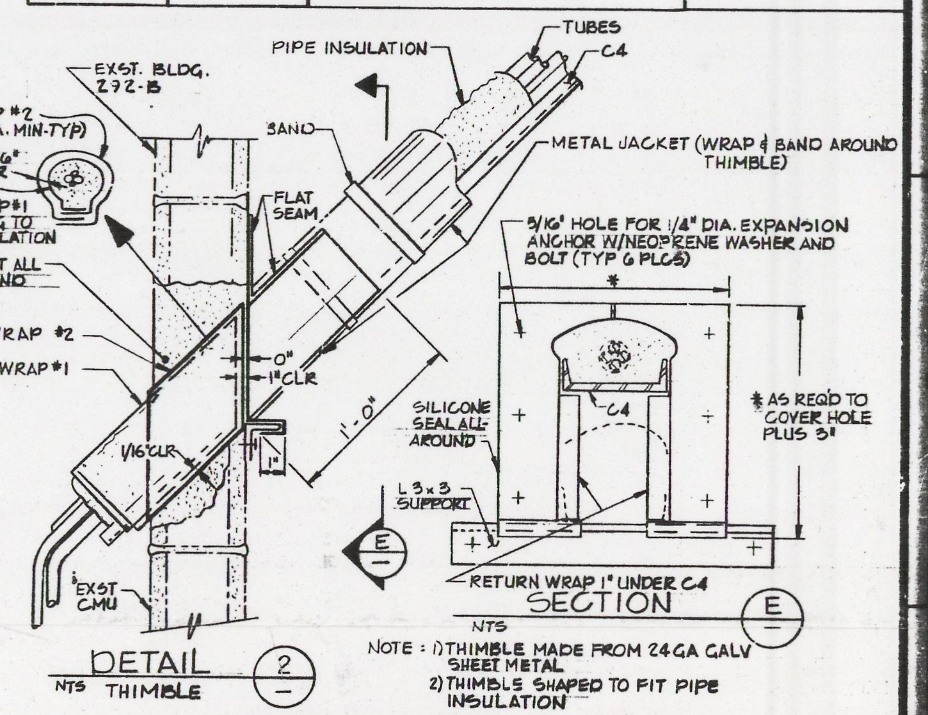

DETAIL (2) NTS THIMBLE

SECTION (E) NTS

NOTE: 1) THIMBLE MADE FROM 24 GA GALV SHEET METAL
2) THIMBLE SHAPED TO FIT PIPE INSULATION

CAUTION
NOT COMPLETE WITHOUT CURRENT STATUS OF OUTSTANDING ECNS FROM DATA BASE

MAR 24 1993

0031010

GENERAL NOTES

1. INSTALLATION OF THIS PROJECT SHALL CONFORM TO THE APPROPRIATE SECTION(S) OF PROJECT CONSTRUCTION SPECIFICATION B-432-C1
2. CONDUIT ROUTING SHOWN DIAGRAMMATICALLY. ACTUAL ROUTING TO BE DETERMINED BY THE FIELD.
3. CONTRACTOR IS TO REMOVE THE EXISTING SAMPLING/MONITORING SYSTEM INCLUDING ALL INSTRUMENTATION, SAMPLE PROBE, TRANSPORT LINE, STEAM TRACING, AND ALL ASSOCIATED STEAM SAMPLE EXTRACTION PIPING. BREAK AND CAP STEAM LINES DOWNSTREAM OF EXISTING SHUT-OFF VALVING.
4. IN ORDER TO PROTECT THE SAMPLING NOZZLES, THE PROBE ASSEMBLY WAS DESIGNED TO BE INSTALLED UPSIDE DOWN AND THEN RIGHTED WHEN FULLY INSERTED. AFTER SETTING SAMPLE PROBE CLEARANCE, ALIGN OUTER ENDS OF PITOT TUBES WITH SAMPLE PROBE TUBES AND TIGHTEN FITTINGS. TRIM TUBING ENDS TO 6" TO 12" AND COMPLETE INSTALLATION.

GENERAL NOTES CONTINUED ON SHEET 2

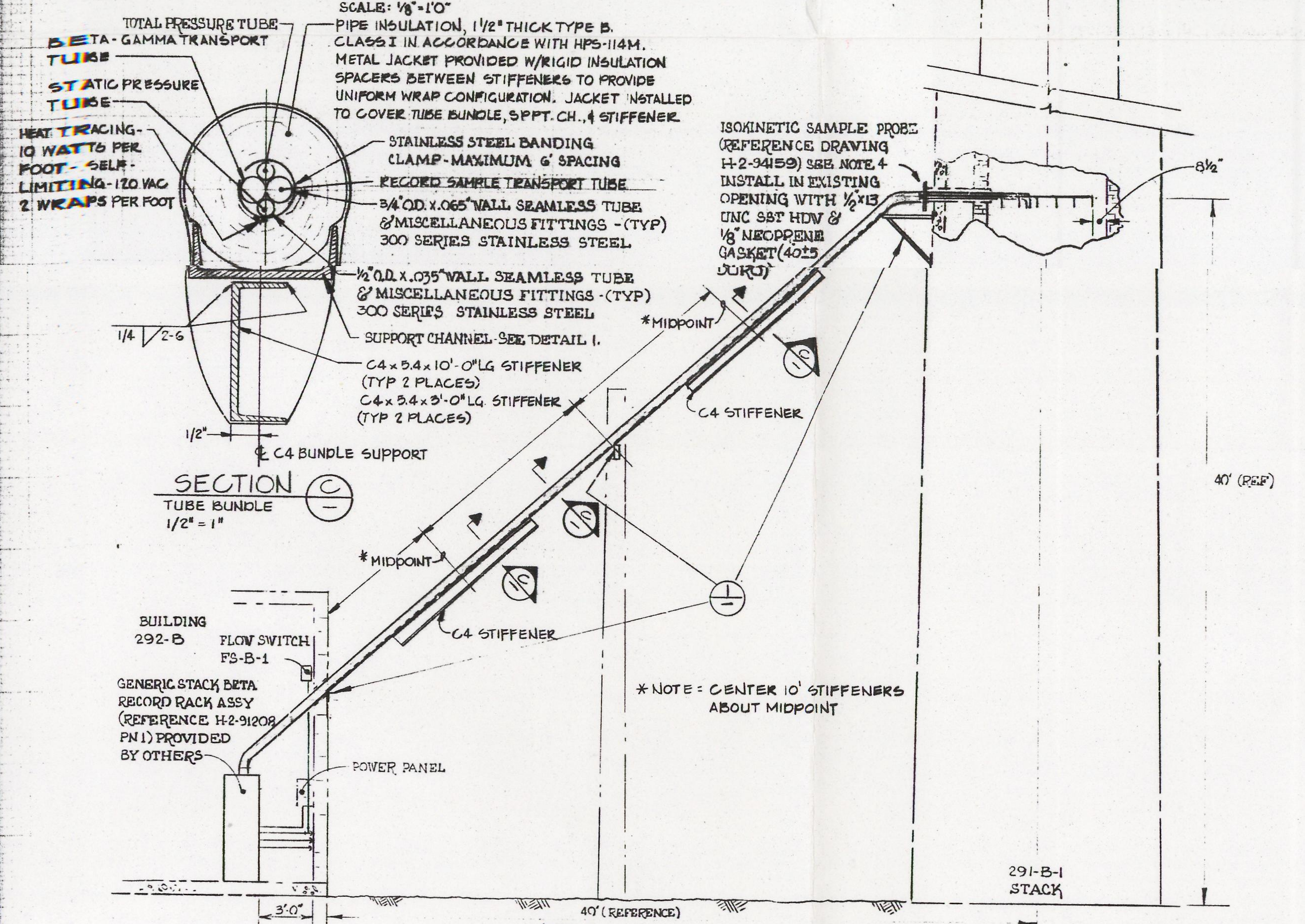

VIEW
SCALE: 1/4"=1'-0"

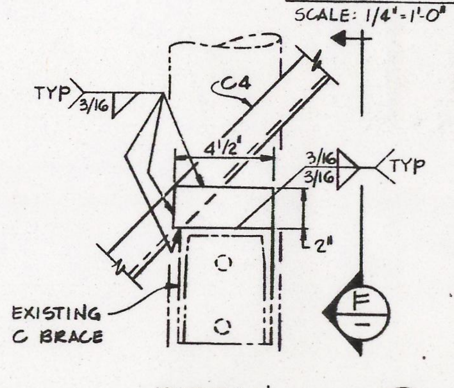

DETAIL (3) NTS

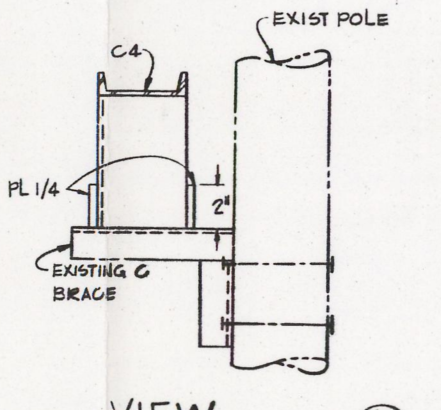

VIEW (F) NTS

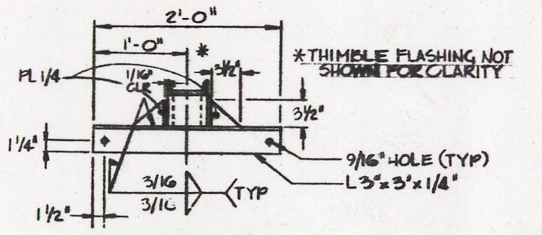

SECTION (D)
BOTTOM SUPPORT
SCALE: 1"=1'-0"

PROJECT B-432
B-PLANT EXHAUST STACK UPGRADE
FOR: ROCKWELL HANFORD OPERATIONS
BY: KAISER ENGINEERS HANFORD
ARCHITECTS-ENGINEERS

DRAWING LIST

DRAWING	SHEET	INDEX	TITLE
H-2-94158	1	0000,5901,7301	ELEC/INSTM/DWG LIST-SITE PLAN & DETAILS-291-B-1 SAMPLER/MONITOR
H-2-94158	2	5901, 7501	ELEC/INSTM-PLAN & DETAILS-DISPATCHER'S OFFICE
H-2-94159	1	4600	PROBE ASSEMBLY-291-B-1 STACK-SAMPLER/MONITOR
H-2-94160	1	7002	ELEC/INSTM-FLOW DIAGRAM-291-B-1 SAMPLER/MONITOR
H-2-94161	1	5903	ELEC/INSTM-ELECTRICAL DIAGRAM-291-B-1 SAMPLER/MONITOR

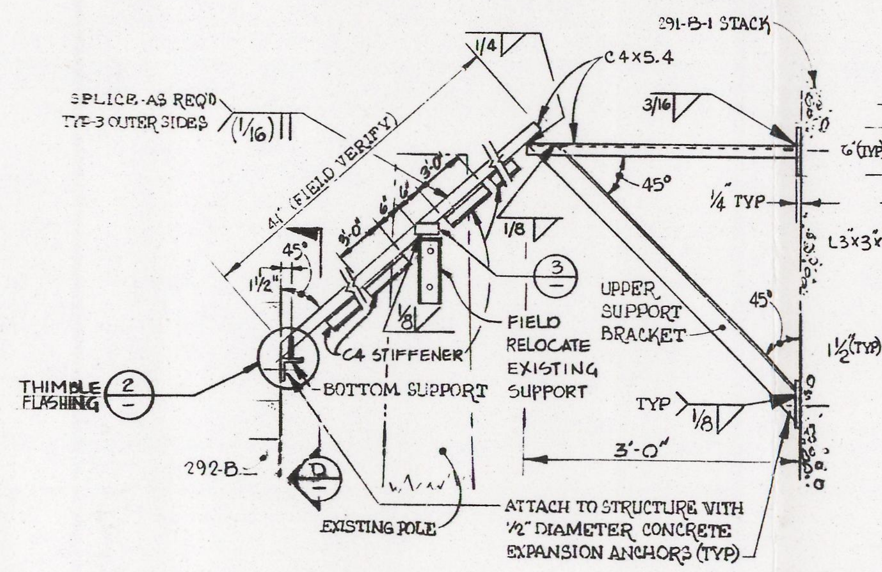

DETAIL (1)
TRANSPORT TUBE BUNDLE SUPPORT
SCALE: 1"=1'-0"

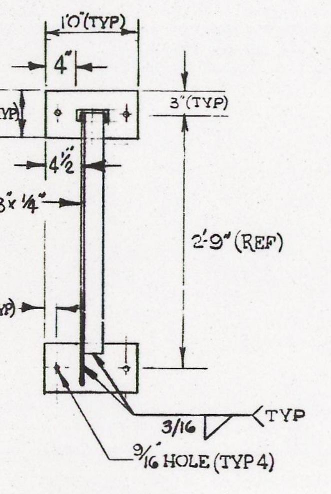

FRONT VIEW
UPPER SUPPORT BRACKET
SCALE: 1"=1'-0"

Rockwell Hanford Operations
RELEASE ENGINEERING ORDER REO-14211
RELEASE DATE 03-19-1984 REV. R001
☐ INFORMATION
☐ AUTHORIZED
☐ CONTROLLED
☐ CONSTRUCTION WORK ORDER
☐ ATTACHMENTS NOT REQUESTED
THIS DOCUMENT IS NOT COMPLETE WITHOUT THE FOLLOWING ATTACHMENTS:
BD 6400 134 (R 10-83)

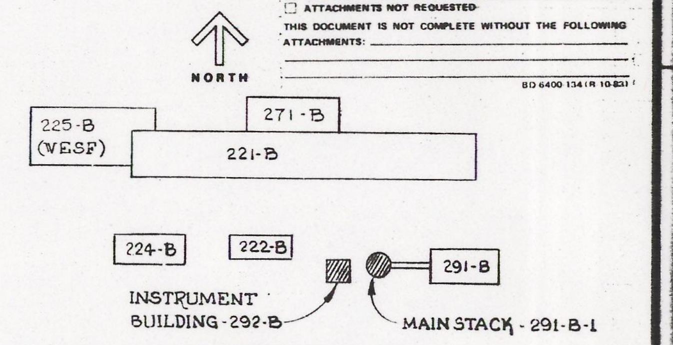

KEY PLAN
NOT TO SCALE

THIS DRAWING MODIFIED BY H-2-95239

IMPACT LEVEL I

*DWG MODIFIED OR REVISED BY THIS DESIGN

NUMBER	TITLE
* H-2-93287	296-B-5 MONITOR INSTL.
H-2-91208	GENERIC BETA RECORD RACK
THIS DWG	DRAWING LIST
REFERENCES	
NEXT USED ON	END ITEM

	RHO APPROVAL BY-DATE	KEH APPROVAL BY-DATE	REV BY DATE	DESCRIPTION	REV
M	9-15-87	REM 9-14-87	8-13-87	INCORPORATED EO #24447 & 29661	2
M	3-8-84	N/A 3-5-84	3/1/84	AS-BUILT FOR PROJECT B432 a) REV. PER DFC B-432-10, ZNE4 D8, ZNE, F7 (PER RECORD CHG SPPT. CH., ZNC8; RELOCATED EXTENDED JACKET BEYOND c) REV. PER DFC B-283-3, ZNE6,7 BY PER DFC B-432-7E d) GENERAL REV. AS INDICATED RECORD CHANGE)	1

MICROFILMED · COMMENT REVIEW · REVISIONS

ROCKWELL APPROVAL BY R.G. Wood	6/24/83	U. S. DEPARTMENT OF ENERGY Richland Operations Office
[signature]	5/23/83	KAISER ENGINEERS HANFORD COMPANY
QA J E Breed	5/23/83	ELEC/INSTM/DWG LIST SITE PLAN & DETAILS 291-B-1 SAMPLER/MONITOR
APPROVED BY [signature]	5/24/83	
SAFETY [signature]	5/23/83	
APPROVED BY [signature]	5/20/83	PROJECT TITLE B-PLANT EXHAUST STACK UPGRADE
CHECKED BY R.C. SWAN	5/20/83	PROJ B-432 · WO X43202 · JOB R424A2
DRAWN BY DUNKS	4/19/83	SCALE SHOWN · BLDG 292-B · INDEX 0000,5901,7301
DESIGNED BY DUNKS	4/19/83	
CLASSIFICATION NONE	BY NOT REQD	DRAWING NUMBER H-2-94158 · SHEET 1 OF 2 · REV 2

RECEIVED EDMC SEP 1993

START

0031010

DETAIL 2
NTS THIMBLE

NOTE: 1) THIMBLE MADE FROM 24GA GALV SHEET METAL
2) THIMBLE SHAPED TO FIT PIPE INSULATION

GENERAL NOTES

1. INSTALLATION OF THIS PROJECT SHALL CONFORM TO THE APPROPRIATE SECTION(S) OF PROJECT CONSTRUCTION SPECIFICATION B-432-C1
2. CONDUIT ROUTING SHOWN DIAGRAMMATICALLY, ACTUAL ROUTING TO BE DETERMINED BY THE FIELD.
3. CONTRACTOR IS TO REMOVE THE EXISTING SAMPLING/MONITORING SYSTEM INCLUDING ALL INSTRUMENTATION, SAMPLE PROBE, TRANSPORT LINE, STEAM TRACING, AND ALL ASSOCIATED STEAM SAMPLE EXTRACTION PIPING. BREAK AND CAP STEAM LINES DOWNSTREAM OF EXISTING SHUT-OFF VALVING.
4. IN ORDER TO PROTECT THE SAMPLING NOZZLES, THE PROBE ASSEMBLY WAS DESIGNED TO BE INSTALLED UPSIDE DOWN AND THEN RIGHTED WHEN FULLY INSERTED. AFTER SETTING SAMPLE PROBE CLEARANCE, ALIGN OUTER ENDS OF PITOT TUBES WITH SAMPLE PROBE TUBES AND TIGHTEN FITTINGS. TRIM TUBING ENDS TO 6" TO 12" AND COMPLETE INSTALLATION.

GENERAL NOTES CONTINUED ON SHEET 2

ETAILS-291-B-1 SAMPLER/MONITOR
PATCHER'S OFFICE
SAMPLER/MONITOR
1 SAMPLER/MONITOR
M-291-B-1 SAMPLER/MONITOR

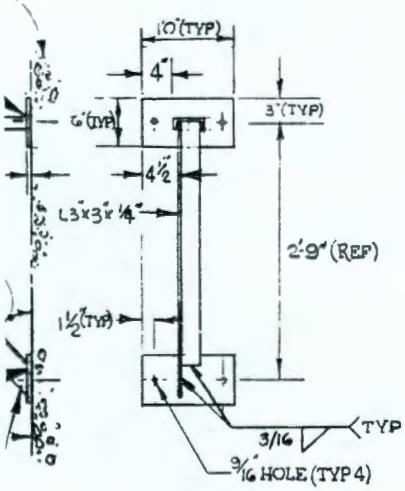

FRONT VIEW
UPPER SUPPORT BRACKET
SCALE: 1"=1'-0"

Rockwell Hanford Operations
RELEASE ENGINEERING ORDER REO-14211
RELEASE DATE 03-19-1984 REV. R001
☐ INFORMATION
☐ AUTHORIZED
☐ CONTROLLED
☐ CONSTRUCTION WORK ORDER
☐ ATTACHMENTS NOT REQUESTED
THIS DOCUMENT IS NOT COMPLETE WITHOUT THE FOLLOWING ATTACHMENTS:

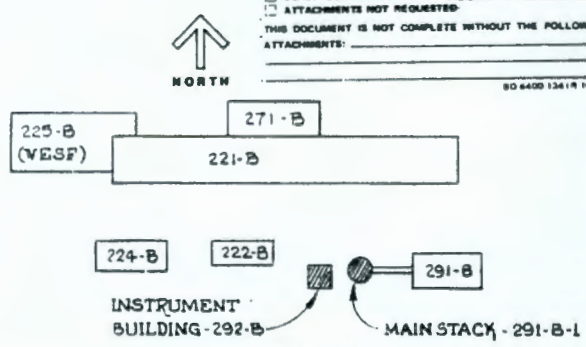

KEY PLAN
NOT TO SCALE

THIS DRAWING MODIFIED BY H-2-95239

IMPACT LEVEL I

INCORPORATED ED #24447 & 29661	2	ROCKWELL APPROVAL BY R.G. Wood	DATE 6/24/83
AS-BUILT FOR PROJECT B432 c) REV. PER DFC B-432-10, ZNE4, DB, ZNE F7 (PER RECORD CHG SPPT. CH., ZNC8; RELOCATED d) EXTENDED JACKET BEYOND c) REV. PER DFC B-283-5, ZNE6, 7 BY ... PER DFC B-432-7E b) GENERAL REV. AS INDICATED RECORD CHANGES	1	CHECKED BY R.C. SWAN	
		DRAWN BY DUNKS	4-19-83
		DESIGNED BY DUNKS	4-19-83
		CLASSIFICATION NONE	BY NOT REQD

U. S. DEPARTMENT OF ENERGY
Richland Operations Office
KAISER ENGINEERS HANFORD COMPANY

ELEC/INSTM/DWG LIST
SITE PLAN & DETAILS
291-B-1 SAMPLER/MONITOR

PROJECT TITLE: B-PLANT EXHAUST STACK UPGRADE
PROJ B-432 | WO X43202 | JOB R424A2
SCALE SHOWN | BLDG 292-B | INDEX 0000, 5901, T301
DRAWING NUMBER H-2-94158 | SHEET 1 | OF 2 | REV 2

REVISIONS

SEP 1993 RECEIVED EDMC

9413096.0572