DOCUMENT RELEASE AND CHANGE FORM

Prepared For the U.S. Department of Energy, Assistant Secretary for Environmental Management
By Washington River Protection Solutions, LLC., PO Box 850, Richland, WA 99352
Contractor For U.S. Department of Energy, Office of River Protection, under Contract DE-AC27-08RV14800

TRADEMARK DISCLAIMER: Reference herein to any specific commercial product, process, or service by trade name, trademark, manufacturer, or otherwise, does not necessarily constitute or imply its endorsement, recommendation, or favoring by the United States government or any agency thereof or its contractors or subcontractors. Printed in the United States of America.

Release Stamp

DATE: May 26,2020

HANFORD RELEASE

1. **Doc No:** RPP-CALC-63755 **Rev.** 00

2. **Title:**
LERF Basin 41 Travel Time for Leachate

3. **Project Number:** T1P226 ☐N/A

4. **Design Verification Required:** ☐Yes ☒No

5. **USQ Number:** ☒ N/A RPP-27195

6. **PrHA Number** **Rev.** ☒ N/A

Clearance Review Restriction Type: public

7. **Approvals**

Title	Name	Signature	Date
Clearance Review	Raymer, Julia R	*Raymer, Julia R*	05/26/2020
Design Authority	Wilson, Nathaniel W	*Wilson, Nathaniel W*	04/29/2020
Checker	Debban, Jeremy A	*Debban, Jeremy A*	04/10/2020
Document Control Approval	Meinecke, Kathryn R	*Meinecke, Kathryn R*	05/26/2020
Environmental Protection	Wall, Jeremy M	*Wall, Jeremy M*	04/29/2020
Originator	Dorsh, Paul M	*Dorsh, Paul M*	04/10/2020
Other Approver	McShane, Michael P	*McShane, Michael P*	05/13/2020
Responsible Engineering Manager	Huntington, Matthew R	*Huntington, Matthew R*	05/14/2020

8. **Description of Change and Justification**

Initial Release.

Design checks were performed in accordance with Sargent & Lundy ESD Quality Assurance Procedure (QAP). Because of the General Service status of the equipment, a graded approach was applied and design verification was not performed as allowed by QAP 3.5, Design Verification.

Note that Paul Dorsh is signing as Originator for G. Taylor Grant and Jeremy Debban is signing as Checker for Darrel J. Packard who are not currently in SPF.

9. **TBDs or Holds** ☒N/A

10. **Related Structures, Systems, and Components**

a. **Related Building/Facilities** ☐N/A	b. **Related Systems** ☐N/A	c. **Related Equipment ID Nos. (EIN)** ☒N/A
LERF FACILITIES	LERF	

11. **Impacted Documents – Engineering** ☒N/A

Document Number	Rev.	Title

12. **Impacted Documents (Outside SPF):**

N/A

13. **Related Documents** ☐N/A

Document Number	Rev.	Title
MT-50497	00	Liquid Effluent Retention Facility (LERF) Basin 41

14. **Distribution**

Name	Organization
Angevine, Brennan T	MISSION ANALYSIS ENGINEERING
Blaak, Whitney S	COGNIZANT SYSTEM ENGINEERING
Demiter, Scott M	ETF OPERATIONS
Foster, Jim	242-A/AW/ETF OPERATIONS
Goessmann, Glen E	ENGINEERING PROGRAMS
Greenhalgh, Aaron M	TANK FARM PROJECTS ENGINEERING
Halgren, Dale L	ETF ENGINEERING
Harris, John W	SAFETY PROGRAM SERVICES RC/P
Joslyn, Cameron C	ETF ENGINEERING
McFerran, Brandon E	242-A/AW/ETF OPERATIONS
McShane, Michael P	ENGINEERING PROGRAMS
Omberg Carro, Susan K	NUCLEAR SAFETY
Powers, Daniel J	ETF ENGINEERING
Roosendaal, Gene D	TFP PROJECT MANAGEMENT
Rutherford, Wally	ETF ENGINEERING
Sackett, Tom E	TANK FARM PROJECTS

DOCUMENT RELEASE AND CHANGE FORM	**Doc No:** RPP-CALC-63755 **Rev.** 00

14. **Distribution**

Name	**Organization**
Samoska, Jerry A	INSTRUMENT & CNTRL ENGINEERING
Shultz, Milton V	NUCLEAR SAFETY
Smith, Gregory E	TANK FARM PROJECTS ENGINEERING
Smoot, Bill R	TFP RADCON
Swanson, Brad L	242-A/AW/ETF OPERATIONS
Wall, Jeremy M	RETRVL & CLOSURE/PROJ ENV CMPL
Wilson, Nathaniel W	ETF PROJECTS ENGINEERING

RPP-CALC-63755
Revision 0

LERF Basin 41 Travel Time for Leachate

Prepared by

G. T. Grant
Sargent & Lundy for Washington River Protection Solutions, LLC

Date Published
April 2020

washington river protection solutions

DAVID E. NIELSON
STATE OF WASHINGTON
28592
REGISTERED
PROFESSIONAL ENGINEER

5-18-2020

Prepared for the U.S. Department of Energy
Office of River Protection

Contract No. DE-AC27-08RV14800

A-6007-231 (REV 0)

Approved for Public Release;
Further Dissemination Unlimited

RPP-CALC-63755, Rev. 0

Sargent & Lundy Engineering Services, Inc.	**CALCULATION COVER SHEET**	**Page No.** 1 of 14 **Date** 04/07/2020 **Rev. No.** 0 **Calculation No:** S54413.024-C-011

Project No.	**Project Title:**	**Client:**
S54413.024	LERF Basin 41 Design	Washington River Protection Solutions

Title:

LERF Basin 41 Travel Time for Leachate

Purpose and Objective:

The purpose of this calculation is to establish that the leachate collection and removal system will meet the EPAs requirement that a leak be detected "at the earliest practicable time."

Rev. No.	Total Pages		Prepared By	Checked By	PM/TL
0	14	Print Name/ Sign:	G. Taylor Grant	Darrell J. Packard	Paul M. Dorsh, P.E.
		Date:	04/07/2020	4/9/2020	4/9/2020

Revision Description (Revision Description/Affected Pages):

		Print Name/ Sign:			
		Date:			

Revision Description (Revision Description/Affected Pages):

RPP-CALC-63755, Rev. 0

Sargent & Lundy Engineering Services, Inc.

CALCULATION REVIEW CHECKLIST

Project No.	Calculation No.	Rev. No.	Page No.
S54413.024	S54413.024-C-011	0	2 of 14

Items Checked	Accept Y	Accept N	Accept N/A	Description of Resolution for Unacceptable Items
1. Cover sheets properly completed.	√			
2. Calculation sheet headers complete with calculation number, revision number, etc.	√			
3. Calculation sheet contents are legible, accurate, and complete per format.	√			
4. Listed attachments included.	√			
5. Calculation objective clearly described.	√			
6. Criteria are suitable and properly referenced to task specific documents.	√			
7. Assumptions and input data selected, described, reasonable, and attached or referenced to task documents.	√			
8. Calculation method identified and appropriate for the design activity.	√			
9. Calculation results reasonable and correctly described in results and conclusions.	√			
10. Physical property calculations generated by CAD software verified via hand calculations.			√	
11. Computer program identified with version and revision.			√	
12. Computer input/output provided or referenced and reasonable.			√	
13. Computer run traceable to calculation (file #, etc.).			√	
14. Computer input/output data and problem type within validation/verification range of use.			√	
15. Computer program validation/verification addressed.			√	
16. Computer operating system in use for calculation preparation is the same as when the software was verified on machine.			√	

Calculation Checking Method	√	Applicable Pages
1. Direct Step-by-Step Check	√	
2. Reference Chart(s) or Book(s) Comparison (Append Documentation)		
3. Alternate Calculation (Append Documentation)		

Comments:

Preparer (Print Name and Sign):	Date:
G. Taylor Grant	4/7/2020
Checker (Print Name and Sign):	**Date:**
Darrel Packard	4/9/2020

CALCULATION SHEET

Project No. S54413.024	**Calculation No.** S54413.024-C-011	**Rev.** 0	**Page No.** 3 of 14
Title: LERF Basin 41 Travel Time for Leachate			
Prepared By: G. Taylor Grant	**Date:** 04/07/2020	**Checked By:** Darrel J. Packard	**Date:** 04/09/2020

TABLE OF CONTENTS

1.0 PURPOSE 4
2.0 METHODOLOGY 4
3.0 DESIGN INPUTS 4
3.1 Gravel Drainage Layer Hydraulic Conductivity 4
3.2 Basin Bottom Slope 4
4.0 ASSUMPTIONS 5
5.0 COMPUTER SOFTWARE 5
6.0 RESULTS 5
7.0 REFERENCES 5
8.0 CALCULATIONS 5
8.1 Basin Bottom Slope 5
8.2 Gravel Drainage Layer Hydraulic Conductivity 5

Attachments

ATTACHMENT – 1 – H-2-838749, SHEET 1, REV. 0, LERF BASIN 41 CIVIL SECONDARY LINER

ATTACHMENT – 2 – EPA/530-SW-91-088, ENVIRONMENTAL FACT SHEET

ATTACHMENT – 3 – WAC 173-303-650

Acronyms

DCR	Demand-to-Capacity Ratio
EPA	U.S. Environmental Protection Agency
LERF	Liquid Effluent Retention Facility
WAC	Washington Administrative Code

Sargent & Lundy Engineering Services, Inc.

CALCULATION SHEET

Project No. S54413.024	**Calculation No.** S54413.024-C-011	**Rev.** 0	**Page No.** 4 of 14
Title: LERF Basin 41 Travel Time for Leachate			
Prepared By: G. Taylor Grant	**Date:** 04/07/2020	**Checked By:** Darrel J. Packard	**Date:** 04/09/2020

1.0 PURPOSE

The purpose of this calculation is to establish that the leachate collection and removal system will meet the EPAs requirement that a leak be detected "at the earliest practicable time."

2.0 METHODOLOGY

The EPA requires that a leak be detected "at the earliest practicable time" (Attachment 2, Reference 2, Page 2). The travel time for leachate will be checked to ensure that unreasonable travel time will not occur. Former proposed EPA rules would have required a leak to be detected within 24 hours.

The Washington Administrative Code WAC-173-303-650 (Attachment 3, Reference 3) subsection (2)(j)(iii) states that

"The leachate collection and removal system between the liners, and immediately above the bottom composite liner in the case of multiple leachate collection and removal systems, is also a leak detection system. This leak detection system must be capable of detecting, collecting, and removing leaks of dangerous constituents at the earliest practicable time through all areas of the top liner likely to be exposed to waste or leachate during the active life and post-closure care period. The requirements for a leak detection system in this paragraph are satisfied by installation of a system that is, at a minimum:

(A) Constructed with a bottom slope of one percent or more;

(B) Constructed of granular drainage materials with a hydraulic conductivity of 1×10^{-1} cm/sec or more and a thickness of 12 inches (30.5 cm) or more; or constructed of synthetic or geonet drainage materials with a transmissivity of 3×10^{-4} m^2/sec or more;

…."

Section (2)(j)(iii) contains five subsections (A-E), however, only subsections (2)(j)(iii)(A) and (2)(j)(iii)(B) contain the geometric and hydraulic conductivity requirements that will affect the travel time from the furthest point of the basin to the sump. Therefore, the basin shall be designed to meet the requirements set forth in subsections (2)(j)(iii)(A) and (2)(j)(iii)(B).

3.0 DESIGN INPUTS

3.1 Gravel Drainage Layer Hydraulic Conductivity

The minimum hydraulic conductivity of the gravel drainage layer shall be = k = 0.1 cm/sec.

3.2 Basin Bottom Slope

The basin bottom slope = S = 0.01 ft/ft.

Sargent & Lundy Engineering Services, Inc.

CALCULATION SHEET

Project No. S54413.024	Calculation No. S54413.024-C-011	Rev. 0	Page No. 5 of 14
Title: LERF Basin 41 Travel Time for Leachate			
Prepared By: G. Taylor Grant	Date: 04/07/2020	Checked By: Darrel J. Packard	Date: 04/09/2020

4.0 ASSUMPTIONS

No assumptions have been made in this calculation.

5.0 COMPUTER SOFTWARE

No unverified computer software was used in this analysis. Calculations are checked using a handheld calculator.

6.0 RESULTS

A summary of requirements is present below:

Item	Required Value	Remarks
Basin Bottom Slope	≥1%	
Gravel Drainage Layer Hydraulic Conductivity	≥0.1 cm/sec	

7.0 REFERENCES

1) H-2-838749, Sheet 1, Rev. 0, LERF Basin 41 Civil Secondary Liner
2) EPA/530-SW-91-088, January 1992, Environmental Fact Sheet
3) Washington Administrative Code WAC 173-303-650, https://apps.leg.wa.gov/WAC/default.aspx?cite=173-303-650

8.0 CALCULATIONS

8.1 Basin Bottom Slope

The basin bottom slope = S_{actual} = 1% (Attachment 1, Reference 1).

The required basin bottom slope = $S_{required}$ = 1% (Attachment 3, Reference 3).

The actual basin bottom slope is equal to the required, therefore WAC 173-303-650 subsection (2)(j)(iii)(A) is satisfied.

8.2 Gravel Drainage Layer Hydraulic Conductivity

The hydraulic conductivity = H_{actual} = 0.1 cm/sec.

The required hydraulic conductivity = $H_{required}$ = 0.1 cm/sec.

The actual gravel drainage layer hydraulic conductivity is equal to the required, therefore WAC 173-303-650 subsection (2)(j)(iii)(B) is satisfied.

Sargent & Lundy Engineering Services, Inc.

CALCULATION SHEET

Project No. S54413.024	**Calculation No.** S54413.024-C-011	**Rev.** 0	**Page No.** 6 of 14
Title: LERF Basin 41 Travel Time for Leachate			
Prepared By: G. Taylor Grant	**Date:** 04/07/2020	**Checked By:** Darrel J. Packard	**Date:** 04/09/2020

ATTACHMENT – 1 - H-2-838749, SHEET 1, REV. 0, LERF BASIN 41 CIVIL SECONDAY LINER

RPP-CALC-63755, Rev. 0

Sargent & Lundy Engineering Services, Inc.

CALCULATION SHEET

Project No.	S54413.024	**Calculation No.**	S54413.024-C-011	**Rev.**	0	**Page No.** 7 of 14	
Title:	LERF Basin 41 Travel Time for Leachate						
Prepared By:	G. Taylor Grant	**Date:** 04/07/2020	**Checked By:**	Darrel J. Packard		**Date:**	04/09/2020

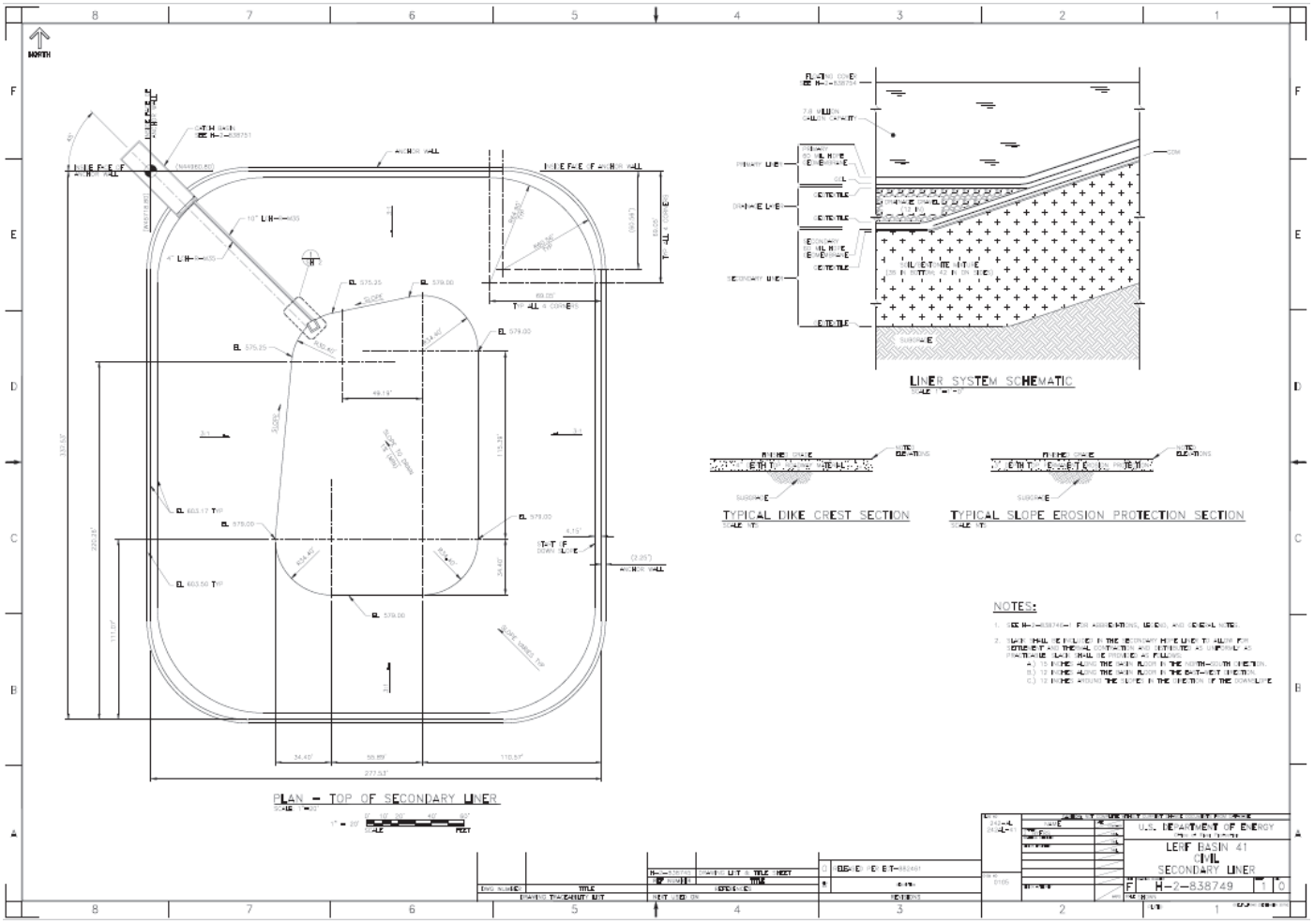

CALCULATION SHEET

Project No. S54413.024	**Calculation No.** S54413.024-C-011	**Rev.** 0	**Page No.** 8 of 14
Title: LERF Basin 41 Travel Time for Leachate			
Prepared By: G. Taylor Grant	**Date:** 04/07/2020	**Checked By:** Darrel J. Packard	**Date:** 04/09/2020

ATTACHMENT – 1 - EPA/530-SW-91-088, ENVIRONMENTAL FACT SHEET

Sargent & Lundy Engineering Services, Inc.

CALCULATION SHEET

Project No. S54413.024	**Calculation No.** S54413.024-C-011	**Rev.** 0	**Page No.** 9 of 14
Title: LERF Basin 41 Travel Time for Leachate			
Prepared By: G. Taylor Grant	**Date:** 04/07/2020	**Checked By:** Darrel J. Packard	**Date:** 04/09/2020

United States Environmental Protection Agency

Office of Solid Waste and Emergency Response Washington DC 20460

EPA/530-SW-91-088 January 1992

Office of Solid Waste

EPA

Environmental Fact Sheet

EPA Releases Final Rule on Liners and Leak Detection Systems

EPA has released a final rule instituting minimum standards for double liners, leachate collection and removal systems, leak detection systems, and construction quality assurance programs at hazardous waste surface impoundments, landfills, and waste piles. These standards will decrease the risk of contaminant release to the environment.

Background

Subtitle C of the 1976 Resource Conservation and Recovery Act (RCRA) creates a comprehensive program for the safe management of hazardous waste. In 1984, Congress passed the Hazardous and Solid Waste Amendments (HSWA), which mandated even stricter standards for the regulation of hazardous waste.

In 1982 and 1985, EPA issued standards for the design and operation of hazardous waste landfills, surface impoundments, and waste piles. These rules required use of liners and leachate collection systems at hazardous waste land disposal units. In some cases, units were required to have two liners.

On March 28, 1986, EPA proposed amendments to the standards for liner system designs. On May 29, 1987, EPA proposed new requirements for leak detection systems at certain hazardous waste land disposal units. The proposed rule also created requirements for reporting and responding to leaks.

Action

This rule finalizes requirements mandated by HSWA and proposed in the March 28, 1986 and May 29, 1987 Federal Registers. The new requirements are summarized as follows:

(1) The final rule requires that new hazardous waste surface impoundments, landfills, waste piles, and lateral expansions and replacements of existing units have a double liner that includes a composite bottom consisting of a synthetic liner (e.g. rubber or plastic) over a soil/clay layer, and a leachate collection and removal system between the liners. Waste piles and landfills must also have a leachate collection and removal system above the liners.

(2) The rule adds technical design and performance standards to the leachate collection and removal system between the liners to ensure that it also functions as a leak detection system to detect leaks in the top liner at the earliest practicable time. Owners and operators may obtain a variance for an alternative system based on site-specific conditions.

(3) EPA is establishing an action leakage rate that will trigger specific response actions. Owners and operators must describe their intended response actions in a response action plan.

(4) Finally, this rule requires owners and operators to prepare and implement a construction quality assurance (CQA) program. Sound CQA has proven to be effective for improving the performance of land disposal units.

For Further Information

For further information, or to order a copy of the Federal Register notice, please contact the RCRA/Superfund Hotline, Monday through Friday, 8:30 a.m. to 4:30 p.m. EST. The national toll-free number is (800) 424-9346, or TDD (800) 553-7672 for the hearing impaired. In the Washington, D.C., area, the number is (703) 920-9810 or TDD (703) 486-3323.

CALCULATION SHEET

Project No. S54413.024	**Calculation No.** S54413.024-C-011	**Rev.** 0	**Page No.** 11 of 14
Title: LERF Basin 41 Travel Time for Leachate			
Prepared By: G. Taylor Grant	**Date:** 04/07/2020	**Checked By:** Darrel J. Packard	**Date:** 04/09/2020

ATTACHMENT – 3 – WAC 173-303-650

Sargent & Lundy Engineering Services, Inc.

CALCULATION SHEET

Project No. S54413.024	**Calculation No.** S54413.024-C-011	**Rev.** 0	**Page No.** 12 of 14
Title: LERF Basin 41 Travel Time for Leachate			
Prepared By: G. Taylor Grant	**Date:** 04/07/2020	**Checked By:** Darrel J. Packard	**Date:** 04/09/2020

WAC 173-303-650 Surface impoundments. (1) Applicability. The regulations in this section apply to owners and operators of facilities that use surface impoundments to treat, store, or dispose of dangerous waste.

(2) Design and operating requirements.

(a)(i) Any surface impoundment that is not covered by (j) of this subsection must have a liner for all portions of the impoundment (except for an existing portion of a surface impoundment). The liner must be designed, constructed, and installed to prevent any migration of wastes out of the impoundment to the adjacent subsurface soil or groundwater or surface water at any time during the active life (including the closure period) of the impoundment. The liner may be constructed of materials that may allow wastes to migrate into the liner (but not into the adjacent subsurface soil or groundwater or surface water) during the active life of the facility, provided that the impoundment is closed in accordance with subsection (6)(a)(i) of this section. For impoundments that will be closed in accordance with subsection (6)(a)(ii) of this section, the liner must be constructed of materials that can prevent wastes from migrating into the liner during the active life of the facility. The liner must be:

(A) Constructed of materials that have appropriate chemical properties and sufficient strength and thickness to prevent failure due to pressure gradients (including static head and external hydrogeologic forces), physical contact with the waste or leachate to which they are exposed, climatic conditions, the stress of installation, and the stress of daily operation;

(B) Placed upon a foundation or base capable of providing support to the liner and resistance to pressure gradients above and below the liner to prevent failure of the liner due to settlement, compression, or uplift;

(C) Installed to cover all surrounding earth likely to be in contact with the waste or leachate; and

(D) For EHW management, the owner or operator must submit an engineering report with their permit application under WAC 173-303-806(4) stating the basis for selecting the liner(s). The report must be certified by an independent, qualified registered professional engineer.

(ii) The owner or operator of a new surface impoundment installed after October 31, 1984, and in which liquid EHW is managed must:

(A) Install a double lined system which incorporates the specifications of subsection (3)(a), (b), and (c) of this section; and

(B) Must comply with either the groundwater monitoring requirements of WAC 173-303-645, or the unsaturated zone monitoring requirements of WAC 173-303-655(6).

(b) The owner or operator will be exempted from the requirements of (a) of this subsection, if the department finds, based on a demonstration by the owner or operator, that alternate design and operating practices, together with location characteristics, will prevent the migration of any dangerous constituents listed in WAC 173-303-9905, or which otherwise cause his wastes to be regulated under this chapter, into the groundwater or surface water at any future time. In deciding whether to grant an exemption, the department will consider:

(i) The nature and quantity of the wastes;

(ii) The proposed alternate design and operation;

(iii) The hydrogeologic setting of the facility, including the attenuative capacity and thickness of the liners and soils present between the impoundment and groundwater or surface water; and

Sargent & Lundy Engineering Services, Inc.

CALCULATION SHEET

Project No. S54413.024	**Calculation No.** S54413.024-C-011	**Rev.** 0	**Page No.** 13 of 14
Title: LERF Basin 41 Travel Time for Leachate			
Prepared By: G. Taylor Grant	**Date:** 04/07/2020	**Checked By:** Darrel J. Packard	**Date:** 04/09/2020

(iv) All other factors which would influence the quality and mobility of the leachate produced and the potential for it to migrate to groundwater or surface water.

(c) A surface impoundment must be designed, constructed, maintained, and operated to prevent overtopping resulting from normal or abnormal operations; overfilling; wind and wave action; rainfall; run-on; malfunctions of level controllers, alarms, and other equipment; and human error.

(d) A surface impoundment must be designed so that any flow of waste into the impoundment can be immediately shut off in the event of overtopping or liner failure.

(e) A surface impoundment must be designed to repel birds.

(f) A surface impoundment must have dikes that are designed, constructed, and maintained with sufficient structural integrity to prevent their failure. In ensuring structural integrity, it must not be presumed that the liner system will function without leakage during the active life of the unit.

(g) Earthen dikes must be kept free of:

(i) Perennial woody plants with root systems which could weaken its structural integrity; and

(ii) Burrowing mammals which could weaken its structural integrity or create leaks through burrows.

(h) Earthen dikes must have a protective cover, such as grass, shale or rock to minimize wind and water erosion and to preserve their structural integrity.

(i) The department will specify in the permit all design and operating practices that are necessary to ensure that the requirements of this subsection are satisfied.

(j) The owner or operator of each new surface impoundment unit on which construction commences after January 29, 1992, each lateral expansion of a surface impoundment unit on which construction commences after July 29, 1992, and each replacement of an existing surface impoundment unit that is to commence reuse after July 29, 1992, must install two or more liners and a leachate collection and removal system between such liners. "Construction commences" is as defined in WAC 173-303-040 under "existing TSD facility."

(i) The liner system must include:

(A) A top liner designed and constructed of materials (e.g., a geomembrane) to prevent the migration of dangerous constituents into such liner during the active life and post-closure care period; and

(B) A composite bottom liner, consisting of at least two components. The upper component must be designed and constructed of materials (e.g., a geomembrane) to prevent the migration of dangerous constituents into this component during the active life and post-closure care period. The lower component must be designed and constructed of materials to minimize the migration of dangerous constituents if a breach in the upper component were to occur. The lower component must be constructed of at least 3 feet (91 cm) of compacted soil material with a hydraulic conductivity of no more than 1 x 10^{-7} cm/sec.

(ii) The liners must comply with (a)(i)(A), (B), and (C) of this subsection.

(iii) The leachate collection and removal system between the liners, and immediately above the bottom composite liner in the case of multiple leachate collection and removal systems, is also a leak detection system. This leak detection system must be capable of detecting, collecting, and removing leaks of dangerous constituents at the

Sargent & Lundy Engineering Services, Inc.

CALCULATION SHEET

Project No. S54413.024	**Calculation No.** S54413.024-C-011	**Rev.** 0	**Page No.** 14 of 14
Title: LERF Basin 41 Travel Time for Leachate			
Prepared By: G. Taylor Grant	**Date:** 04/07/2020	**Checked By:** Darrel J. Packard	**Date:** 04/09/2020

earliest practicable time through all areas of the top liner likely to be exposed to waste or leachate during the active life and post-closure care period. The requirements for a leak detection system in this paragraph are satisfied by installation of a system that is, at a minimum:

(A) Constructed with a bottom slope of one percent or more;

(B) Constructed of granular drainage materials with a hydraulic conductivity of 1 x 10^{-1} cm/sec or more and a thickness of 12 inches (30.5 cm) or more; or constructed of synthetic or geonet drainage materials with a transmissivity of 3 x 10^{-4} m^2/sec or more;

(C) Constructed of materials that are chemically resistant to the waste managed in the surface impoundment and the leachate expected to be generated, and of sufficient strength and thickness to prevent collapse under the pressures exerted by overlying wastes and any waste cover materials or equipment used at the surface impoundment;

(D) Designed and operated to minimize clogging during the active life and post-closure care period; and

(E) Constructed with sumps and liquid removal methods (e.g., pumps) of sufficient size to collect and remove liquids from the sump and prevent liquids from backing up into the drainage layer. Each unit must have its own sump(s). The design of each sump and removal system must provide a method for measuring and recording the volume of liquids present in the sump and of liquids removed.

(iv) The owner or operator will collect and remove pumpable liquids in the sumps to minimize the head on the bottom liner.

(v) The owner or operator of a leak detection system that is not located completely above the seasonal high water table must demonstrate that the operation of the leak detection system will not be adversely affected by the presence of groundwater.

(k) The department may approve alternative design or operating practices to those specified in (j) of this subsection if the owner or operator demonstrates to the department that such design and operating practices, together with location characteristics:

(i) Will prevent the migration of any dangerous constituent into the groundwater or surface water at least as effectively as the liners and leachate collection and removal system specified in (j) of this subsection; and

(ii) Will allow detection of leaks of dangerous constituents through the top liner at least as effectively.

(l) The double liner requirement set forth in (j) of this subsection may be waived by the department for any monofill, if:

(i) The monofill contains only dangerous wastes from foundry furnace emission controls or metal casting molding sand, and such wastes do not contain constituents which would render the wastes dangerous for reasons other than the toxicity characteristic in WAC 173-303-090(8) or the toxicity criteria at WAC 173-303-100(5); and

(ii)(A) The monofill has at least one liner for which there is no evidence that such liner is leaking. For the purposes of this paragraph, the term "liner" means a liner designed, constructed, installed, and operated to prevent dangerous waste from passing into the liner at any time during the active life of the facility, or a liner designed, constructed, installed, and operated to prevent dangerous waste from migrating beyond the liner to adjacent subsurface soil, groundwater, or surface water at any time during the active life of the facility. In the case of any surface impoundment which has been exempted from the requirements of (j) of this subsection on the basis

DOCUMENT RELEASE AND CHANGE FORM

Prepared For the U.S. Department of Energy, Assistant Secretary for Environmental Management
By Washington River Protection Solutions, LLC., PO Box 850, Richland, WA 99352
Contractor For U.S. Department of Energy, Office of River Protection, under Contract DE-AC27-08RV14800

TRADEMARK DISCLAIMER: Reference herein to any specific commercial product, process, or service by trade name, trademark, manufacturer, or otherwise, does not necessarily constitute or imply its endorsement, recommendation, or favoring by the United States government or any agency thereof or its contractors or subcontractors. Printed in the United States of America.

Release Stamp

DATE: May 26,2020

HANFORD RELEASE

1. **Doc No:** RPP-CALC-63756 **Rev.** 00

2. **Title:**
LERF Basin 41 Leachate Collection and Removal System Parameters

3. **Project Number:** T1P226 ☐N/A

4. **Design Verification Required:** ☐Yes ☒No

5. **USQ Number:** ☒ N/A RPP-27195

6. **PrHA Number** **Rev.** ☒ N/A

Clearance Review Restriction Type: public

7. **Approvals**

Title	Name	Signature	Date
Clearance Review	Raymer, Julia R	*Raymer, Julia R*	05/26/2020
Design Authority	Wilson, Nathaniel W	*Wilson, Nathaniel W*	04/24/2020
Checker	Debban, Jeremy A	*Debban, Jeremy A*	04/10/2020
Document Control Approval	Alvarez, Efren	*Alvarez, Efren*	05/26/2020
Environmental Protection	Wall, Jeremy M	*Wall, Jeremy M*	04/13/2020
Originator	Dorsh, Paul M	*Dorsh, Paul M*	04/10/2020
Other Approver	McShane, Michael P	*McShane, Michael P*	05/13/2020
Responsible Engineering Manager	Huntington, Matthew R	*Huntington, Matthew R*	04/28/2020

8. **Description of Change and Justification**

Initial Release.

Design checks were performed in accordance with Sargent & Lundy ESD Quality Assurance Procedure (QAP). Because of the General Service status of the equipment, a graded approach was applied and design verification was not performed as allowed by QAP 3.5, Design Verification.

Note that Paul Dorsh is signing as Originator for G. Taylor Grant and Jeremy Debban is signing as Checker for Darrel J. Packard who are not currently in SPF.

9. **TBDs or Holds** ☒N/A

10. **Related Structures, Systems, and Components**

a. **Related Building/Facilities** ☐N/A	b. **Related Systems** ☐N/A	c. **Related Equipment ID Nos. (EIN)** ☒N/A
LERF FACILITIES	LERF	

11. **Impacted Documents – Engineering** ☒N/A

Document Number	Rev.	Title

12. **Impacted Documents (Outside SPF):**

N/A

13. **Related Documents** ☐N/A

Document Number	Rev.	Title
MT-50497	00	Liquid Effluent Retention Facility (LERF) Basin 41

14. **Distribution**

Name	Organization
Angevine, Brennan T	MISSION ANALYSIS ENGINEERING
Blaak, Whitney S	COGNIZANT SYSTEM ENGINEERING
Demiter, Scott M	ETF OPERATIONS
Foster, Jim	242-A/AW/ETF OPERATIONS
Goessmann, Glen E	ENGINEERING PROGRAMS
Greenhalgh, Aaron M	TANK FARM PROJECTS ENGINEERING
Harris, John W	SAFETY PROGRAM SERVICES RC/P
Joslyn, Cameron C	ETF ENGINEERING
McFerran, Brandon E	242-A/AW/ETF OPERATIONS
McShane, Michael P	ENGINEERING PROGRAMS
Omberg Carro, Susan K	NUCLEAR SAFETY
Powers, Daniel J	ETF ENGINEERING
Roosendaal, Gene D	TFP PROJECT MANAGEMENT
Rutherford, Wally	ETF ENGINEERING
Sackett, Tom E	TANK FARM PROJECTS
Samoska, Jerry A	INSTRUMENT & CNTRL ENGINEERING

DOCUMENT RELEASE AND CHANGE FORM	**Doc No:** RPP-CALC-63756 **Rev.** 00

14. **Distribution**

Name	**Organization**
Shultz, Milton V	NUCLEAR SAFETY
Smith, Gregory E	TANK FARM PROJECTS ENGINEERING
Smoot, Bill R	TFP RADCON
Stamper, Lavonne J	ETF ENGINEERING
Swanson, Brad L	242-A/AW/ETF OPERATIONS
Wall, Jeremy M	RETRVL & CLOSURE/PROJ ENV CMPL
Wilson, Nathaniel W	ETF PROJECTS ENGINEERING

RPP-CALC-63756
Revision 0

LERF Basin 41 Leachate Collection and Removal System Parameters

Prepared by

G. T. Grant
Sargent & Lundy for Washington River Protection Solutions, LLC

Date Published
April 2020

washington river protection solutions

Prepared for the U.S. Department of Energy
Office of River Protection

Contract No. DE-AC27-08RV14800

A-6007-231 (REV 0)

Approved for Public Release;
Further Dissemination Unlimited

RPP-CALC-63756, Rev. 0

Sargent & Lundy Engineering Services, Inc.	**CALCULATION COVER SHEET**	**Page No.** 1 of 24 **Date** 04/07/2020 **Rev. No.** 0 **Calculation No:** S54413.024-C-012

Project No.	**Project Title:**	**Client:**
S54413.024	LERF Basin 41 Design	Washington River Protection Solutions

Title:

LERF Basin 41 Leachate Collection and Removal System Parameters

Purpose and Objective:

The purpose of this calculation is to determine the required capacity of the gravel drainage layer in order to handle postulated leaks during operation of the basin.

Rev. No.	Total Pages		Prepared By	Checked By	PM/TL
0	24	**Print Name/ Sign:**	G. Taylor Grant	Darrel J. Packard	Paul M. Dorsh, P.E.
		Date:	04/07/2020	4/9/2020	4/9/2020

Revision Description (Revision Description/Affected Pages):

		Print Name/ Sign:			
		Date:			

Revision Description (Revision Description/Affected Pages):

RPP-CALC-63756, Rev. 0

Sargent & Lundy Engineering Services, Inc.

CALCULATION REVIEW CHECKLIST

Project No.	Calculation No.	Rev. No.	Page No.
S54413.024	S54413.024-C-012	0	2 of 24

Items Checked	Accept Y	Accept N	Accept N/A	Description of Resolution for Unacceptable Items
1. Cover sheets properly completed.	√			
2. Calculation sheet headers complete with calculation number, revision number, etc.	√			
3. Calculation sheet contents are legible, accurate, and complete per format.	√			
4. Listed attachments included.	√			
5. Calculation objective clearly described.	√			
6. Criteria are suitable and properly referenced to task specific documents.	√			
7. Assumptions and input data selected, described, reasonable, and attached or referenced to task documents.	√			
8. Calculation method identified and appropriate for the design activity.	√			
9. Calculation results reasonable and correctly described in results and conclusions.	√			
10. Physical property calculations generated by CAD software verified via hand calculations.			√	
11. Computer program identified with version and revision.			√	
12. Computer input/output provided or referenced and reasonable.			√	
13. Computer run traceable to calculation (file #, etc.).			√	
14. Computer input/output data and problem type within validation/verification range of use.			√	
15. Computer program validation/verification addressed.			√	
16. Computer operating system in use for calculation preparation is the same as when the software was verified on machine.			√	

Calculation Checking Method	√	Applicable Pages
1. Direct Step-by-Step Check	√	
2. Reference Chart(s) or Book(s) Comparison (Append Documentation)		
3. Alternate Calculation (Append Documentation)		

Comments:

Preparer (Print Name and Sign):	Date:
G. Taylor Grant	4/7/2020
Checker (Print Name and Sign):	**Date:**
Darrel Packard	4/9/2020

CALCULATION SHEET

Project No. S54413.024	**Calculation No.** S54413.024-C-012	**Rev.** 0	**Page No.** 3 of 24
Title: LERF Basin 41 Leachate Collection and Removal System Parameters			
Prepared By: G. Taylor Grant	**Date:** 04/07/2020	**Checked By:** Darrel J. Packard	**Date:** 04/09/2020

TABLE OF CONTENTS

1.0 PURPOSE 5

2.0 METHODOLOGY 5

3.0 DESIGN INPUTS 5
- 3.1 Hydraulic Conductivity 5
- 3.2 Leachate Leakage Rate 5
- 3.3 Gravel Drainage Layer 6
- 3.4 Basin Floor Slope 6
- 3.5 Maximum Length Along Basin Floor 6
- 3.6 Basin Area 6
- 3.7 Gravel Drainage Layer Porosity 6

4.0 ASSUMPTIONS 7

5.0 COMPUTER SOFTWARE 7

6.0 RESULTS 7

7.0 REFERENCES 7

8.0 CALCULATIONS 8

Attachments

ATTACHMENT – 1 – H-2-838749, SHEET 1, REV. 0, LERF BASIN 41 CIVIL SECONDARY LINER

ATTACHMENT – 2 – GEOSYNTHETIC DESIGN GUIDANCE FOR HAZARDOUS WASTE LANDFILL CELLS AND SURFACE IMPOUNDMENT

ATTACHMENT – 3 – STORMWATER INFILTRATION IN HIGHWAY EMBANKMENTS – SATURATED HYDRAULIC CONDUCTIVITY ESTIMATION FOR UNCOMPACTED AND COMPACTED SOILS, TABLE 3

ATTACHMENT – 4 – WAC 173-303-650

ATTACHMENT – 5 – HANFORD SITE DANGEROUS WASTE PERMIT #WA7890008967, ADDENDUM C.5.8

CALCULATION SHEET

Project No. S54413.024	**Calculation No.** S54413.024-C-012	**Rev.** 0	**Page No.** 4 of 24
Title: LERF Basin 41 Leachate Collection and Removal System Parameters			
Prepared By: G. Taylor Grant	**Date:** 04/07/2020	**Checked By:** Darrel J. Packard	**Date:** 04/09/2020

Acronyms

GDM	Geosynthetic Drainage Material
GPM	Gallon per Minute
HDPE	High Density Polyethylene
LCR	Leachate Collection/Removal System
LERF	Liquid Effluent Retention Facility
WAC	Washington Administrative Code

CALCULATION SHEET

Project No. S54413.024	**Calculation No.** S54413.024-C-012	**Rev.** 0	**Page No.** 5 of 24
Title: LERF Basin 41 Leachate Collection and Removal System Parameters			
Prepared By: G. Taylor Grant	**Date:** 04/07/2020	**Checked By:** Darrel J. Packard	**Date:** 04/09/2020

1.0 PURPOSE

The purpose of this calculation is to determine the required capacity of the gravel drainage layer that is located between the two composite liners in order to handle postulated leaks during operation of the basin.

2.0 METHODOLOGY

A gravel drainage layer is located in between the primary (top) liner system and the secondary (bottom) liner system (see Reference 1, Attachment 1, Drawing H-2-838749 Sheet 1). This gravel drainage layer will convey any effluent that leaks through the primary (top) liner system to a pump in the northwest corner of the basin.

Design Guidance for Hazardous Waste Landfill Cells and Surface Impoundments, Page III-2 (Reference 3, Attachment 2) provides guidance for the design of leachate collection and removal systems. The provided guidance is:

- "The drainage layer should include a pipe network which is designed to efficiently collect leachate. The spacing of the pipe network should be sufficient to ensure that no more than 1 foot of leachate will collect in the LCR. The pipe and drainage layer materials should be chemically resistant to the waste and leachate. The pipe should also be strong enough to withstand expected loading."

Design Guidance for Hazardous Waste Landfill Cells and Surface Impoundments, Page III-2 (Reference 3, Attachment 2), also provides guidance for the basin bottom slope, gravel drainage layer hydraulic conductivity, and gravel drainage layer thickness, however, the required basin bottom slope, gravel drainage layer hydraulic conductivity, and gravel drainage layer thickness comes from the WAC-173-303-650 (Reference 6, Attachment 4) subsection (2)(j)(iii). These requirements are analyzed in calculation RPP-CALC-63755, Rev. 0, and the results are provided as design inputs in Sections 3.1, 3.3, and 3.4.

The gravel drainage layer will be designed to meet the above requirements. Note that the pipe strength is determined in calculation RPP-CALC-63746, Rev, 0.

3.0 DESIGN INPUTS

3.1 Hydraulic Conductivity

The minimum hydraulic conductivity of the gravel drainage layer is given in Reference 6, Reference 7, and Attachment 4.

Hydraulic conductivity = K = 0.1 cm/sec.

3.2 Leachate Leakage Rate

The leachate design leakage rate through the primary liner is 2100 gal/day/acre and is given in Reference 8, Attachment 5, Section C5.8.

Leachate leakage rate = e = 2100 gal/day/acre.

3.3 Gravel Drainage Layer

The gravel drainage layer sits on the bottom of the basin, between the primary and secondary liners. A GDM is used along the side slopes that will drain into the gravel drainage layer. The area of the gravel drainage layer on the bottom of the basin is given in drawing H-2-838749 Sheet 1 (Reference 1, Attachment 1). The bottom area of the gravel drainage layer is:

Gravel Area = [(149.79 x 55.89) – (6.20 x 6.70)] + (115.39 x 34.40) + [109.19 x ½(23.70+34.40)]

+ [49.19 x ½(24.2+34.40)] + (¾ x π x 34.40^2) + (¼ x π x 30.40^2)

= 8330.22 + 3969.42 + 3171.97 + 1441.27 + 2788.23 + 725.83 = 20427 sf

The height of the gravel drainage layer is given in References 6, 7, and Attachment 4, and is 12 inches.

The volume of the gravel drainage layer will be the Gravel Area times the height of the gravel drainage layer. This will be conservative because it will not include additional volume from the side slopes.

3.4 Basin Floor Slope

The slope of the basin floor is given in Reference 6, Reference 7, and Attachment 4.

A slope of 1% is equal to $\alpha = \tan^{-1}(1\%) = \tan^{-1}(0.01) = 0.573$ deg.

3.5 Maximum Length Along Basin Floor

The maximum length along the basin floor is from the southeast corner to the northwest corner. This length is the furthest length possible that any effluent could travel through the gravel drainage layer to the pump in the northwest corner. The maximum length = L = 179 ft (Reference 1, Attachment 1).

3.6 Basin Area

The total basin area that may contribute to effluent leakage is given in drawing H-2-838749 Sheet 1 (Reference 1, Attachment 1). This area is = Basin Area = 337.53 ft x 277.53 ft = 93674.70 sf = 2.15 acre.

3.7 Gravel Drainage Layer Porosity

The gravel drainage layer porosity is conservatively estimated based on Reference 4, Table 3, Page 45. This table provides uncompacted porosities for numerous soil samples with varying gradations. The gravel drainage layer specified for LERF Basin 41 is "WSDOT M41-10 9-03.12(5) Gravel Backfill for Drywells gradation, or an approved equal" (Reference 5, Section 31-90-52 2.1.D.1.a.ii). In general, the specified gradation has more gravel and less fines than the samples provided in Reference 4. The porosity is conservatively set near the low end of values provided in table 3 of Reference 4.

The gravel drainage layer porosity = n = 0.30.

CALCULATION SHEET

Project No. S54413.024	**Calculation No.** S54413.024-C-012	**Rev.** 0	**Page No.** 7 of 24
Title: LERF Basin 41 Leachate Collection and Removal System Parameters			
Prepared By: G. Taylor Grant	**Date:** 04/07/2020	**Checked By:** Darrel J. Packard	**Date:** 04/09/2020

4.0 ASSUMPTIONS

No assumptions have been made in this calculation.

5.0 COMPUTER SOFTWARE

No unverified computer software was used in this analysis. Calculations are checked using a handheld calculator.

6.0 RESULTS

A summary table of the results is below.

Item	Parameter	Requirement	Calculated
Leachate	Maximum Depth	<1 ft	0.657 ft
Pump	Pump Capacity	>3.14 gpm	3.14 gpm

The maximum height of leachate in the gravel drainage layer is less than the allowable of 1 ft. The required pump capacity will be incorporated in the pump selection.

7.0 REFERENCES

1) H-2-838749, Sheet 1, Rev. 0, LERF Basin 41 Civil Secondary Liner

2) H-2-838749, Sheet 2, Rev. 0, LERF Basin 41 Civil Secondary Liner Details

3) Richardson, Gregory N., and Robert M. Koerner, *Geosynthetic Design Guidance for Hazardous Waste Landfill Cells and Surface Impoundments*, Hazardous Waste Engineering Research Laboratory, U.S. EPA

4) Allen, Tony M., *Stormwater Infiltration in Highway Embankments – Saturated Hydraulic Conductivity Estimation for Uncompacted and Compacted Soils*, Research Report WA-RD 872.1, Washington State Department of Transportation, October 2017

5) RPP-SPEC-63632, Rev. 0, LERF Basin 41 Design Construction Specification

6) Washington Administrative Code WAC 173-303-650, https://apps.leg.wa.gov/WAC/default.aspx?cite=173-303-650

7) RPP-CALC-63755, Rev. 0 LERF Basin 41 Travel Time for Leachate

8) Hanford Site Dangerous Waste Permit #WA7890008967, Addendum C.5.8

Sargent & Lundy Engineering Services, Inc.

CALCULATION SHEET

Project No. S54413.024	**Calculation No.** S54413.024-C-012	**Rev.** 0	**Page No.** 8 of 24
Title: LERF Basin 41 Leachate Collection and Removal System Parameters			
Prepared By: G. Taylor Grant	**Date:** 04/07/2020	**Checked By:** Darrel J. Packard	**Date:** 04/09/2020

8.0 CALCULATIONS

The maximum height of effluent will be determined by Equation 3.6 in Reference 3, Attachment 2, Page III-4.

The maximum height of effluent is:

$H_{max} = L/(2n) \times \{[e/K+\tan^2(\alpha)]^{0.5} - \tan(\alpha)\}$

Where:

L is defined in Section 3.5

n is defined in Section 3.7

K is defined in Section 3.1

α is defined in Section 3.4

e is the percolation velocity in cm/sec, defined in Section 3.2

e = 2100 gal/day/acre x 0.1337 cf/gal x 1 acre/43560 sf x 30.48 cm/ft x 1 day/24 hr

x 1 hr/3600 sec

x 2.15 acres

$= 4.89 \times 10^{-6}$ cm/sec

$H_{max} = 179/(2 \times 0.3) \times [4.89\times10^{-6} / 0.1 + \tan^2(0.0573^o)]^{0.5} - \tan(0.573^o) = 0.657$ ft

The height of the leachate is less than the maximum allowed of 1 foot.

Determine the minimum pump capacity to discharge effluent.

e = 2100 gal/day/acre x 2.15 acre x 1 day / 24 hr x 1 hr / 60 min = 3.14 gpm

The pump shall be capable of pumping at least 3.14 gpm.

CALCULATION SHEET

Project No. S54413.024	**Calculation No.** S54413.024-C-012	**Rev.** 0	**Page No.** 9 of 24
Title: LERF Basin 41 Leachate Collection and Removal System Parameters			
Prepared By: G. Taylor Grant	**Date:** 04/07/2020	**Checked By:** Darrel J. Packard	**Date:** 04/09/2020

ATTACHMENT – 1 - H-2-838749, SHEET 1, REV. 0, LERF BASIN 41 CIVIL SECONDARY LINER H-2-838749, SHEET 2, REV. 0, LERF BASIN 41 CIVIL SECONDARY LINER DETAILS

RPP-CALC-63756, Rev. 0

Sargent & Lundy Engineering Services, Inc.

CALCULATION SHEET

Project No.	S54413.024	**Calculation No.**	S54413.024-C-012	**Rev.**	0	**Page No.** 10 of 24	
Title:	LERF Basin 41 Leachate Collection and Removal System Parameters						
Prepared By:	G. Taylor Grant	**Date:** 04/07/2020	**Checked By:**	Darrel J. Packard		**Date:**	04/09/2020

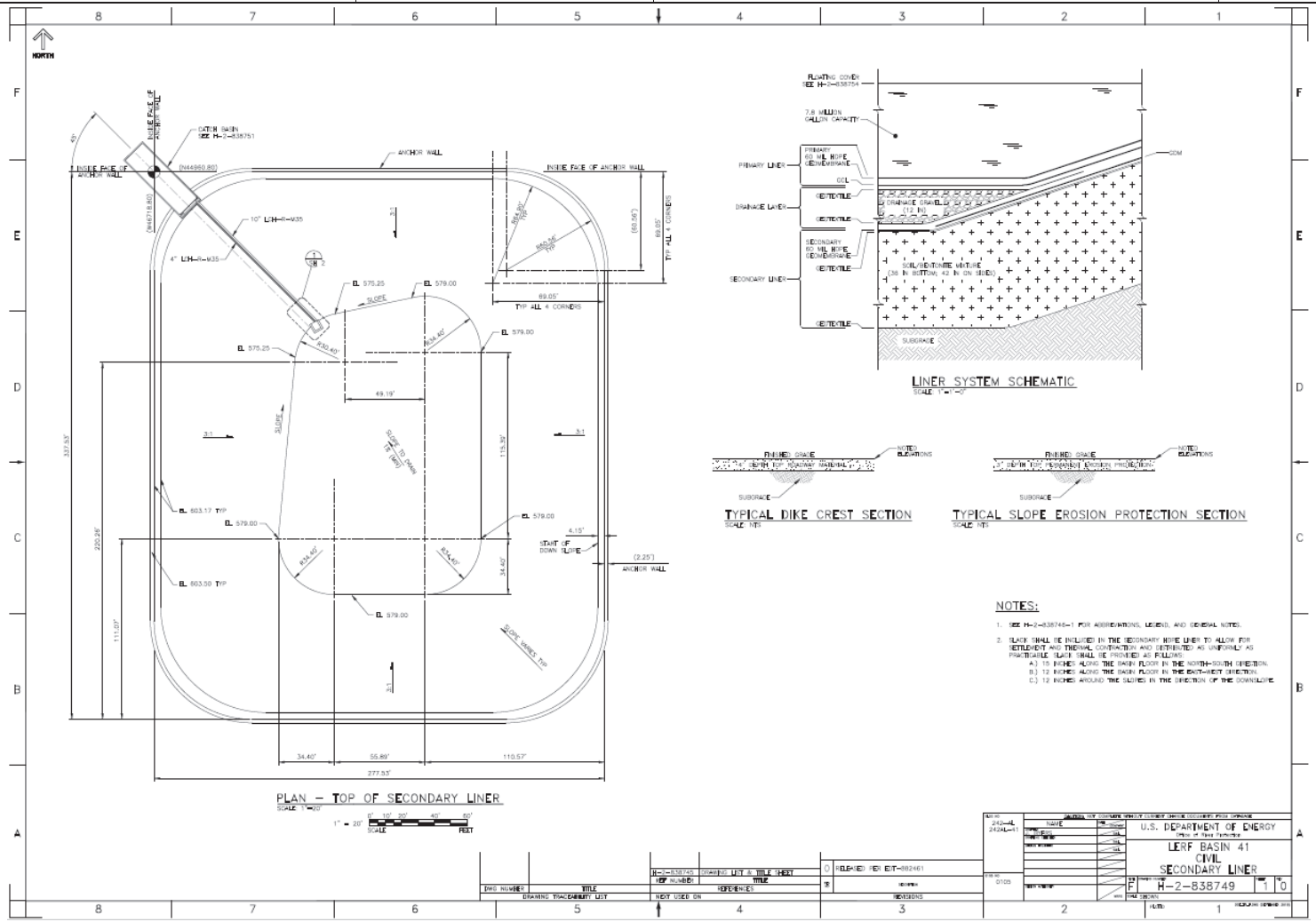

RPP-CALC-63756, Rev. 0

Sargent & Lundy Engineering Services, Inc.

CALCULATION SHEET

Project No.	S54413.024	**Calculation No.**	S54413.024-C-012	**Rev.**	0	**Page No.** 11 of 24	
Title:	LERF Basin 41 Leachate Collection and Removal System Parameters						
Prepared By:	G. Taylor Grant	**Date:** 04/07/2020	**Checked By:**	Darrel J. Packard		**Date:**	04/09/2020

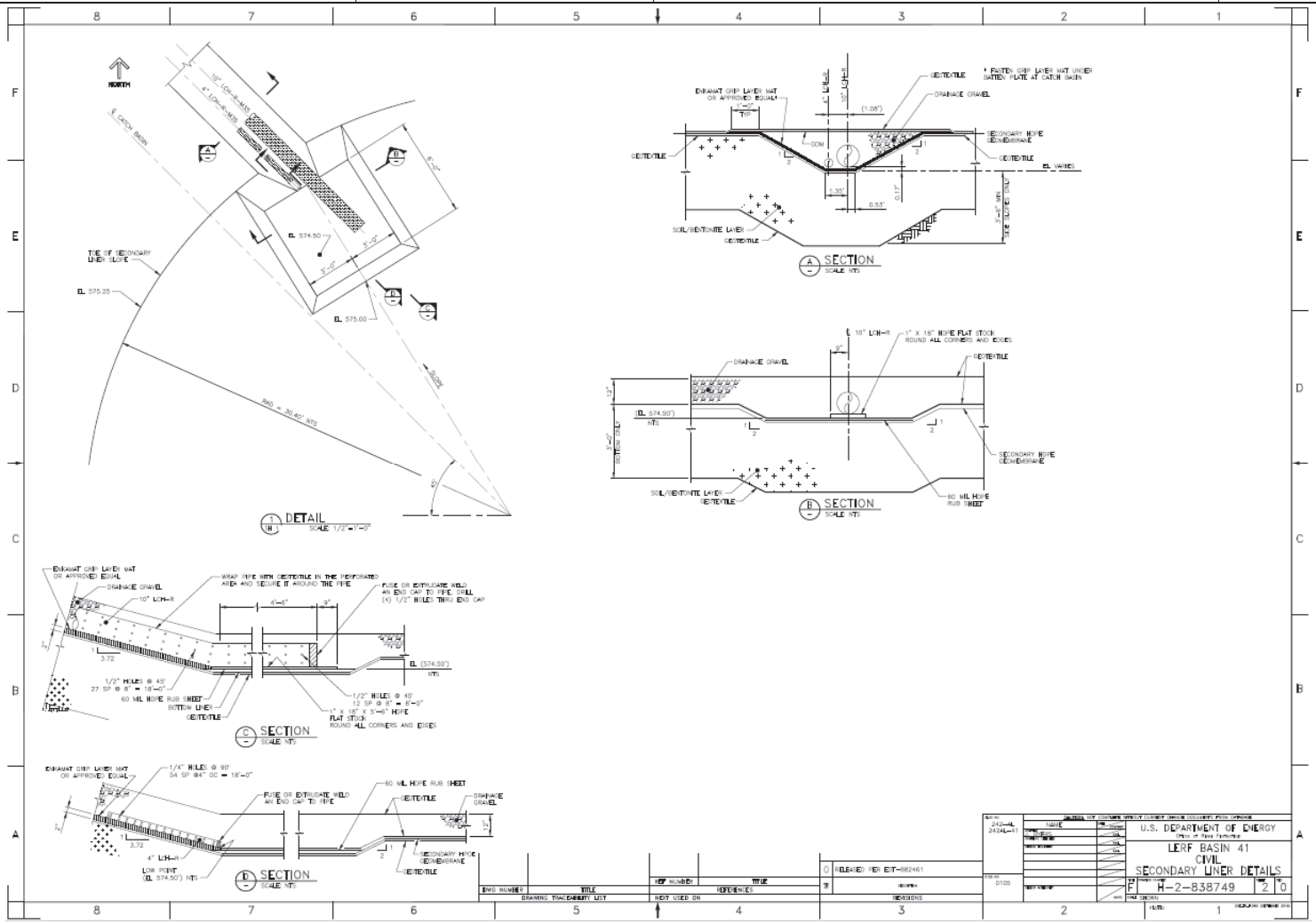

CALCULATION SHEET

Project No. S54413.024	**Calculation No.** S54413.024-C-012	**Rev.** 0	**Page No.** 12 of 24
Title: LERF Basin 41 Leachate Collection and Removal System Parameters			
Prepared By: G. Taylor Grant	**Date:** 04/07/2020	**Checked By:** Darrel J. Packard	**Date:** 04/09/2020

ATTACHMENT – 2 - GEOSYNTHETIC DESIGN GUIDANCE FOR HAZARDOUS WASTE LANDFILL CELLS AND SURFACE IMPOUNDMENT

Sargent & Lundy Engineering Services, Inc.

CALCULATION SHEET

Project No. S54413.024	**Calculation No.** S54413.024-C-012	**Rev.** 0	**Page No.** 13 of 24
Title: LERF Basin 41 Leachate Collection and Removal System Parameters			
Prepared By: G. Taylor Grant	**Date:** 04/07/2020	**Checked By:** Darrel J. Packard	**Date:** 04/09/2020

LEACHATE COLLECTION/REMOVAL SYSTEMS

Leachate is defined as "any liquid, including any suspended components in the liquid, that has percolated through or drained from hazardous waste" (40CFR 260.10). Leachate is generated by the draining of liquids from within the waste mass and from the infiltration of water from the surface of the cell. Additionally, the LCR system is commonly used during operation of the facility to remove surface water that has drained into the cell. This water is assumed to be leachate. The quantity of leachate generated depends on the types of waste, operational procedures, cover efficiency, and water balance within the cell at a particular time. Liquid input to the cell includes liquids in the deposited waste and surface liquids resulting from precipitation or surface water. Liquid output includes evaporation, transpiration, and seepage from the facility (Bass, 1986). Techniques for estimating leachate volume are discussed by Schroeder, et al (1984).

Minimum Technology Guidance (MTG) provided by EPA (1985) provides technical guidance on minimun design standards for LCR systems. Specific guidance on leachate collection systems design includes the following:

- A granular drainage layer should be at least 30 cm (12 in.) thick with a minimum hydraulic conductivity of 1×10^{-2} cm/sec and a minimum bottom final slope of 2% after long term settlement.
- Synthetic drainage layers may be used if they are equivalent to the granular design, including chemical compatibility, flow under load, clogging resistance, and protection of the FML.
- The drainage layer should include a pipe network which is designed to efficiently collect leachate. The spacing of the pipe network should be sufficient to ensure that no more than 1 foot of leachate will collect in the LCR. The pipe and drainage layer materials should be chemically resistant to the waste and leachate. The pipe should also be strong enough to withstand expected loading.
- A filter layer (granular or synthetic) should be used above the drainage layer to prevent clogging.
- The LCR system must cover the bottom and sidewalls of the unit.

Geosynthetic components within the LCR can, therefore, include a synthetic drainage layer used to replace the granular layer or the pipe network itself, and filter fabric designed to prevent clogging of the drain pipes or synthetic drainage lines.

<u>Transmissivity Criteria</u>

A geosynthetic system used to replace the granular drainage layer must provide either the minimum planar flow capacity defined by the Minimun Technology Guidance or that required to maintain the liquid levels over the liner at less than 30 cm (1 ft). The planar flow of liquids through the LCR is defined by Darcy's equation as

EPA III - 2

Sargent & Lundy Engineering Services, Inc.

CALCULATION SHEET

Project No. S54413.024	**Calculation No.** S54413.024-C-012	**Rev.** 0	**Page No.** 14 of 24
Title: LERF Basin 41 Leachate Collection and Removal System Parameters			
Prepared By: G. Taylor Grant	**Date:** 04/07/2020	**Checked By:** Darrel J. Packard	**Date:** 04/09/2020

$$q = K_p \, i \, A \qquad \text{Eq(3.1)}$$

$$q = K_p \, [dh/L] \, W \, t \qquad \text{Eq(3.2)}$$

where q is the flow rate, K_p is the permeability coefficient in the plane of the geosynthetic, dh is the head loss, L is the flow length, W is the width of the drainage layer, and t is the thickness of the drainage layer. Because the thickness of most geosynthetic systems is difficult to quantify, Equation 3.2 is commonly expressed as

$$q = [K_p \, t] \, [dh/L] \, W \qquad \text{Eq(3.3)}$$

$$q = \theta \, [dh/L] \, W \qquad \text{Eq(3.4)}$$

where θ is defined as the transmissivity of the drainage layer. Substituting minimum drainage layer properties as defined in the current MTG guidance criteria (30 cm thickness and a minimum permeability of 1×10^{-2} cm/sec) results in a minimum required drainage layer transmissivity of 3×10^{-5} m^2/s.

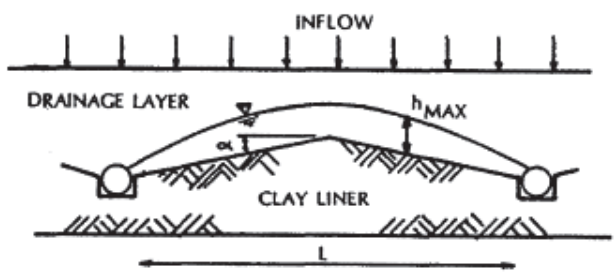

Figure 3.2 Leachate Head vs Collector Pipe Spacing

The minimum transmissivity of an LCR may also be controlled by the requirement to maintain no more than 30 cm (1 foot) of leachate head acting on the liner at all times. Conventional granular leachate control systems are designed so that the maximum one foot head acting on the FML remains within the drain layer. The head acting on the FML is controlled by the rate at which leachate is being generated and collected within the system, the hydraulic properties of the LCR, and the spacing of the collector pipes within the LCR. These parameters are shown on Figure 3.2. The maximum head acting on the FML for a uniform rate of leachate generation is given by

Sargent & Lundy Engineering Services, Inc.

CALCULATION SHEET

Project No. S54413.024	**Calculation No.** S54413.024-C-012	**Rev.** 0	**Page No.** 15 of 24
Title: LERF Basin 41 Leachate Collection and Removal System Parameters			
Prepared By: G. Taylor Grant	**Date:** 04/07/2020	**Checked By:** Darrel J. Packard	**Date:** 04/09/2020

$$H_{max} = \frac{L\sqrt{c}}{2}\left[\frac{\tan^2\alpha}{c} + 1 - \frac{\tan\alpha}{c}\sqrt{\tan^2\alpha + c}\right] \qquad \text{Eq(3.5)}$$

where c is defined as the inflow rate, q, divided by the hydraulic conductivity of the LCR. The greatest uncertainty associated with this calculation is accurately estimating the rate of leakage generated at the LCR boundary. While beyond the scope of this document, methods for estimating this quantity have been detailed by Wong(1977), Scharch(1981), and Demetracopoulos(1984). This method has been supplemented by an alternate procedure proposed by Moore (EPA,1983b) that is based on the percolation velocity of the leachate. The maximim leachate head using this method is given by

$$H_{max} = \frac{L}{2n}\left[\sqrt{\frac{e}{K} + \tan^2\alpha} - \tan\alpha\right] \qquad \text{Eq(3.6)}$$

where e is the percolation velocity based on conversion of the annual percipitation rate into a uniform velocity (cm/sec) and K is the hydraulic conductivity of the layer. The percolation velocity is equivalent to the inflow rate but is based on the assumption of a given percentage percolation of precipitation into the cell while the inflow rate is influenced by soil permeability, waste characteristics, etc. In these designs, the leachate phreatic surface remains within the LCR system.

Geosynthetic LCR systems are very thin when compared to equivalent-flow granular LCR systems. Thus the one foot of head that may act on the FML would not physically remain within the synthetic LCR layer. The one foot head must be interpreted as a design-applied pressure that is assumed to act at the interface between the synthetic LCR and the overlying soil. The required transmissivity of a synthetic LCR is computed by equating the rate of leachate inflow to the LCR with the flow capacity of the LCR. For a of synthetic LCR, the volume of leachate entering the system is equal to

$$Q_{in} = q_{in}\, L\, W \qquad \text{Eq(3.7)}$$

where q_{in} is the inflow rate of leakage generated at the waste LCR boundary, L is the effective length of the LCR and W is the width. The quantity of leachate that can flow through the LCR system is given by

$$Q_{LCR} = 2\,T\,[1 + L\sin(\phi)/2]/L \qquad \text{Eq(3.8)}$$

where ϕ is the slope of the LCR. Equating the leachate inflow and flow capacity of the LCR, an expression for the minimum value of transmissivity of the LCR is obtained as

$$\theta = \frac{qL^2}{4h_{max} + 2L\sin\phi} \qquad \text{Eq(3.9)}$$

The percolation velocity e can be substituted for q. Example 3.1 details the computation steps required to evaluate the mimimum transmissivity based on percolation velocity and leachate inflow criteria.

EPA III - 4

CALCULATION SHEET

Project No. S54413.024	**Calculation No.** S54413.024-C-012	**Rev.** 0	**Page No.** 16 of 24
Title: LERF Basin 41 Leachate Collection and Removal System Parameters			
Prepared By: G. Taylor Grant	**Date:** 04/07/2020	**Checked By:** Darrel J. Packard	**Date:** 04/09/2020

ATTACHMENT – 3 – STORMWATER INFILTRATION IN HIGHWAY EMBANKMENTS – SATURATED HYDRAULIC CONDUCTIVITY ESTIMATION FOR UNCOMPACTED AND COMPACTED SOILS, TABLE 3

Sargent & Lundy Engineering Services, Inc.

CALCULATION SHEET

Project No. S54413.024	**Calculation No.** S54413.024-C-012	**Rev.** 0	**Page No.** 17 of 24
Title: LERF Basin 41 Leachate Collection and Removal System Parameters			
Prepared By: G. Taylor Grant	**Date:** 04/07/2020	**Checked By:** Darrel J. Packard	**Date:** 04/09/2020

Table 3. Comparison of uncompacted and compacted specimen properties for tests conducted in this study.

[1]Soil	Uncompacted Dry Unit Weight (pcf)	Compacted Dry Unit Weight, γ_m (pcf)	Specific Gravity, G_s[3]	Uncompacted Porosity, n	Compacted Porosity, n	Uncompacted Void Ratio, e	Compacted Void Ratio, e
Natural alluvial soil (silt) – Chehalis River	118	--	2.76*	0.55	--	1.24	--
Natural alluvial soil (silt) – Chehalis River	114	--	2.76	0.55	--	1.23	--
Extreme Fine End - 0.005 mm	114	113	2.73*	0.33	0.34	0.493	0.52
Extreme Fine End - 0.01 mm	107	111	2.67*	0.37	0.34	0.59	0.52
Fine End Sand - 0.12 mm (rigid wall)	108	--	2.67	0.36	--	0.55	--
Fine End Sand - 0.12 mm (rigid wall)	113	119	2.67	0.33	0.29	0.49	0.41
Fine End Sand - 0.12 mm	--	122	2.67	--	0.27	--	0.37
Fine End Sand - 0.17 mm (rigid wall)	111	117	2.67	0.34	0.30	0.52	0.43
Fine End Sand - 0.17 mm (rigid wall)	111	--	2.67	0.34	--	0.52	--
Fine End Sand - 0.17 mm	--	123	2.67	--	0.26	--	0.35
Fine End Sand - 0.23 mm (rigid wall)	116	127	2.67	0.31	0.25	0.45	0.33
Fine End Sand - 0.26 mm (rigid wall)	96	102	2.67*	0.43	0.39	0.75	0.64
Fine End Sand - 0.26 mm (rigid wall)	--	106	2.67	--	0.36	--	0.56
Fine End Sand - 0.26 mm	--	120	2.67	--	0.29	--	0.41
Coarse Sand/Gravel – 1.2 mm (rigid wall)	113	115	2.67	0.32	0.31	0.47	0.45
Coarse Sand/Gravel – 1.55 mm (rigid wall)	117	124	2.67*	0.30	0.26	0.43	0.35
Coarse Sand/Gravel – 2.18 mm (rigid wall)	113	120	2.67	0.32	0.28	0.47	0.39
Coarse Sand/Gravel – 2.9 mm (rigid wall)	109	119	2.68	0.35	0.29	0.54	0.41
Coarse Sand/Gravel – 3.9 mm (rigid wall)	107	111	2.68	0.36	0.34	0.56	0.52
Coarse Sand/Gravel – 5.8 mm (rigid wall)	117	119	2.68*	0.29	0.32	0.41	0.52
Coarse Sand/Gravel – 8.4 mm (rigid wall)	--	113	2.68	--	0.32	--	0.47
Gravel = 4%, Sand = 66%, Silt = 30%	92	121	2.71	0.45	0.28	0.83	0.40
Gravel = 4%, Sand = 66%, Silt = 30%	-	128	2.71	--	0.23	-	0.30
Gravel = 19%, Sand = 51%, Silt = 30%	104	132	2.71*	0.39	0.22	0.63	0.28
Gravel = 19%, Sand = 51%, Silt = 30%	-	134	2.71	--	0.21	-	0.26
Gravel = 45%, Sand = 25%, Silt = 30%	102	130	2.71	0.40	0.23	0.66	0.30
Gravel = 45%, Sand = 25%, Silt = 30%	-	136	2.71	--	0.20	-	0.24
Gravel = 5%, Sand = 75%, Silt = 20%	96	129	2.76	0.44	0.25	0.79	0.33
Gravel = 49%, Sand = 31%, Silt = 20%	120	130	2.76	0.30	0.25	0.43	0.33
Gravel = 23%, Sand = 57%, Silt = 20%	117	138	2.76*	0.32	0.20	0.48	0.25
Gravel = 55%, Sand = 35%, Silt = 10%	125	137	2.77	0.28	0.20	0.38	0.26
Gravel = 26%, Sand = 64%, Silt = 10%	110	135	2.77*	0.36	0.22	0.57	0.28
Gravel = 26%, Sand = 64%, Silt = 10%	104	128	2.77	0.40	0.26	0.67	0.35
Gravel = 6%, Sand = 84%, Silt = 10%	103	125	2.77	0.40	0.27	0.67	0.38
Fine End Gravel Borrow (rigid wall)	102	118	2.67	0.39	0.29	0.63	0.42
Fine End Gravel Borrow (rigid wall)	100	120	2.67	0.40	0.28	0.66	0.39
Fine End Gravel Borrow (rigid wall)	102	121	2.67	0.39	0.27	0.63	0.37
Select Borrow (rigid wall)	113	123	2.68*	0.32	0.26	0.48	0.36
Select Borrow (rigid wall)	107	122	2.68	0.36	0.27	0.56	0.38
Select Borrow (rigid wall)	113	122	2.68	0.33	0.27	0.48	0.37
Common Borrow (rigid wall)	110	126	2.67	0.34	0.24	0.51	0.32
Common Borrow (rigid wall)	110	121	2.67	0.34	0.27	0.51	0.38
Common Borrow (rigid wall)	107	124	2.67	0.36	0.26	0.56	0.35
Sandy Glacial Outwash (rigid wall)	113	123	2.67*	0.32	0.26	0.48	0.35
Sandy Glacial Outwash (rigid wall)	111	122	2.67	0.33	0.27	0.50	0.37
Sandy Glacial Outwash (rigid wall)	110	122	2.67	0.34	0.27	0.52	0.37
Course Gravel Borrow (rigid wall)	108	115	2.67	0.35	0.31	0.53	0.45
Course Gravel Borrow (rigid wall)	108	114	2.67	0.35	0.31	0.53	0.45
Course Gravel Borrow (rigid wall)	108	114	2.67	0.36	0.32	0.55	0.46

[1]Tests were conducted in flexible wall permeameter, except where noted.
[2]As compacted specimen moisture content was 8% for flex wall tests and 6% for rigid wall tests.
[3]Specific Gravity, G_s, assumed to be 2.67 for soils with no measurement of G_s (typical for glacially derived soils in the Puget Sound region), or was assumed to be the same as measured G_s for a similar soil (same source with approximately the same gradation).
*Measured G_s for soil.

CALCULATION SHEET

Project No. S54413.024	**Calculation No.** S54413.024-C-012	**Rev.** 0	**Page No.** 18 of 24
Title: LERF Basin 41 Leachate Collection and Removal System Parameters			
Prepared By: G. Taylor Grant	**Date:** 04/07/2020	**Checked By:** Darrel J. Packard	**Date:** 04/09/2020

ATTACHMENT – 4 – WAC 173-303-650

CALCULATION SHEET

Project No. S54413.024	**Calculation No.** S54413.024-C-012	**Rev.** 0	**Page No.** 19 of 24
Title: LERF Basin 41 Leachate Collection and Removal System Parameters			
Prepared By: G. Taylor Grant	**Date:** 04/07/2020	**Checked By:** Darrel J. Packard	**Date:** 04/09/2020

WAC 173-303-650 Surface impoundments. (1) Applicability. The regulations in this section apply to owners and operators of facilities that use surface impoundments to treat, store, or dispose of dangerous waste.

(2) Design and operating requirements.

(a)(i) Any surface impoundment that is not covered by (j) of this subsection must have a liner for all portions of the impoundment (except for an existing portion of a surface impoundment). The liner must be designed, constructed, and installed to prevent any migration of wastes out of the impoundment to the adjacent subsurface soil or groundwater or surface water at any time during the active life (including the closure period) of the impoundment. The liner may be constructed of materials that may allow wastes to migrate into the liner (but not into the adjacent subsurface soil or groundwater or surface water) during the active life of the facility, provided that the impoundment is closed in accordance with subsection (6)(a)(i) of this section. For impoundments that will be closed in accordance with subsection (6)(a)(ii) of this section, the liner must be constructed of materials that can prevent wastes from migrating into the liner during the active life of the facility. The liner must be:

(A) Constructed of materials that have appropriate chemical properties and sufficient strength and thickness to prevent failure due to pressure gradients (including static head and external hydrogeologic forces), physical contact with the waste or leachate to which they are exposed, climatic conditions, the stress of installation, and the stress of daily operation;

(B) Placed upon a foundation or base capable of providing support to the liner and resistance to pressure gradients above and below the liner to prevent failure of the liner due to settlement, compression, or uplift;

(C) Installed to cover all surrounding earth likely to be in contact with the waste or leachate; and

(D) For EHW management, the owner or operator must submit an engineering report with their permit application under WAC 173-303-806(4) stating the basis for selecting the liner(s). The report must be certified by an independent, qualified registered professional engineer.

(ii) The owner or operator of a new surface impoundment installed after October 31, 1984, and in which liquid EHW is managed must:

(A) Install a double lined system which incorporates the specifications of subsection (3)(a), (b), and (c) of this section; and

(B) Must comply with either the groundwater monitoring requirements of WAC 173-303-645, or the unsaturated zone monitoring requirements of WAC 173-303-655(6).

(b) The owner or operator will be exempted from the requirements of (a) of this subsection, if the department finds, based on a demonstration by the owner or operator, that alternate design and operating practices, together with location characteristics, will prevent the migration of any dangerous constituents listed in WAC 173-303-9905, or which otherwise cause his wastes to be regulated under this chapter, into the groundwater or surface water at any future time. In deciding whether to grant an exemption, the department will consider:

(i) The nature and quantity of the wastes;

(ii) The proposed alternate design and operation;

(iii) The hydrogeologic setting of the facility, including the attenuative capacity and thickness of the liners and soils present between the impoundment and groundwater or surface water; and

Certified on 10/25/2019 WAC 173-303-650 Page 1

Sargent & Lundy Engineering Services, Inc.

CALCULATION SHEET

Project No. S54413.024	**Calculation No.** S54413.024-C-012	**Rev.** 0	**Page No.** 20 of 24
Title: LERF Basin 41 Leachate Collection and Removal System Parameters			
Prepared By: G. Taylor Grant	**Date:** 04/07/2020	**Checked By:** Darrel J. Packard	**Date:** 04/09/2020

(iv) All other factors which would influence the quality and mobility of the leachate produced and the potential for it to migrate to groundwater or surface water.

(c) A surface impoundment must be designed, constructed, maintained, and operated to prevent overtopping resulting from normal or abnormal operations; overfilling; wind and wave action; rainfall; run-on; malfunctions of level controllers, alarms, and other equipment; and human error.

(d) A surface impoundment must be designed so that any flow of waste into the impoundment can be immediately shut off in the event of overtopping or liner failure.

(e) A surface impoundment must be designed to repel birds.

(f) A surface impoundment must have dikes that are designed, constructed, and maintained with sufficient structural integrity to prevent their failure. In ensuring structural integrity, it must not be presumed that the liner system will function without leakage during the active life of the unit.

(g) Earthen dikes must be kept free of:

(i) Perennial woody plants with root systems which could weaken its structural integrity; and

(ii) Burrowing mammals which could weaken its structural integrity or create leaks through burrows.

(h) Earthen dikes must have a protective cover, such as grass, shale or rock to minimize wind and water erosion and to preserve their structural integrity.

(i) The department will specify in the permit all design and operating practices that are necessary to ensure that the requirements of this subsection are satisfied.

(j) The owner or operator of each new surface impoundment unit on which construction commences after January 29, 1992, each lateral expansion of a surface impoundment unit on which construction commences after July 29, 1992, and each replacement of an existing surface impoundment unit that is to commence reuse after July 29, 1992, must install two or more liners and a leachate collection and removal system between such liners. "Construction commences" is as defined in WAC 173-303-040 under "existing TSD facility."

(i) The liner system must include:

(A) A top liner designed and constructed of materials (e.g., a geomembrane) to prevent the migration of dangerous constituents into such liner during the active life and post-closure care period; and

(B) A composite bottom liner, consisting of at least two components. The upper component must be designed and constructed of materials (e.g., a geomembrane) to prevent the migration of dangerous constituents into this component during the active life and post-closure care period. The lower component must be designed and constructed of materials to minimize the migration of dangerous constituents if a breach in the upper component were to occur. The lower component must be constructed of at least 3 feet (91 cm) of compacted soil material with a hydraulic conductivity of no more than 1×10^{-7} cm/sec.

(ii) The liners must comply with (a)(i)(A), (B), and (C) of this subsection.

(iii) The leachate collection and removal system between the liners, and immediately above the bottom composite liner in the case of multiple leachate collection and removal systems, is also a leak detection system. This leak detection system must be capable of detecting, collecting, and removing leaks of dangerous constituents at the

earliest practicable time through all areas of the top liner likely to be exposed to waste or leachate during the active life and post-closure care period. The requirements for a leak detection system in this paragraph are satisfied by installation of a system that is, at a minimum:

(A) Constructed with a bottom slope of one percent or more;

(B) Constructed of granular drainage materials with a hydraulic conductivity of 1 x 10^{-1} cm/sec or more and a thickness of 12 inches (30.5 cm) or more; or constructed of synthetic or geonet drainage materials with a transmissivity of 3 x 10^{-4} m^2/sec or more;

(C) Constructed of materials that are chemically resistant to the waste managed in the surface impoundment and the leachate expected to be generated, and of sufficient strength and thickness to prevent collapse under the pressures exerted by overlying wastes and any waste cover materials or equipment used at the surface impoundment;

(D) Designed and operated to minimize clogging during the active life and post-closure care period; and

(E) Constructed with sumps and liquid removal methods (e.g., pumps) of sufficient size to collect and remove liquids from the sump and prevent liquids from backing up into the drainage layer. Each unit must have its own sump(s). The design of each sump and removal system must provide a method for measuring and recording the volume of liquids present in the sump and of liquids removed.

(iv) The owner or operator will collect and remove pumpable liquids in the sumps to minimize the head on the bottom liner.

(v) The owner or operator of a leak detection system that is not located completely above the seasonal high water table must demonstrate that the operation of the leak detection system will not be adversely affected by the presence of groundwater.

(k) The department may approve alternative design or operating practices to those specified in (j) of this subsection if the owner or operator demonstrates to the department that such design and operating practices, together with location characteristics:

(i) Will prevent the migration of any dangerous constituent into the groundwater or surface water at least as effectively as the liners and leachate collection and removal system specified in (j) of this subsection; and

(ii) Will allow detection of leaks of dangerous constituents through the top liner at least as effectively.

(l) The double liner requirement set forth in (j) of this subsection may be waived by the department for any monofill, if:

(i) The monofill contains only dangerous wastes from foundry furnace emission controls or metal casting molding sand, and such wastes do not contain constituents which would render the wastes dangerous for reasons other than the toxicity characteristic in WAC 173-303-090(8) or the toxicity criteria at WAC 173-303-100(5); and

(ii)(A) The monofill has at least one liner for which there is no evidence that such liner is leaking. For the purposes of this paragraph, the term "liner" means a liner designed, constructed, installed, and operated to prevent dangerous waste from passing into the liner at any time during the active life of the facility, or a liner designed, constructed, installed, and operated to prevent dangerous waste from migrating beyond the liner to adjacent subsurface soil, groundwater, or surface water at any time during the active life of the facility. In the case of any surface impoundment which has been exempted from the requirements of (j) of this subsection on the basis

CALCULATION SHEET

Project No. S54413.024	**Calculation No.** S54413.024-C-012	**Rev.** 0	**Page No.** 22 of 24
Title: LERF Basin 41 Leachate Collection and Removal System Parameters			
Prepared By: G. Taylor Grant	**Date:** 04/07/2020	**Checked By:** Darrel J. Packard	**Date:** 04/09/2020

ATTACHMENT – 5 – HANFORD SITE DANGEROUS WASTE PERMIT #WA7890008967, ADDENDUM C.5.8

Sargent & Lundy Engineering Services, Inc.

CALCULATION SHEET

Project No. S54413.024	**Calculation No.** S54413.024-C-012	**Rev.** 0	**Page No.** 23 of 24
Title: LERF Basin 41 Leachate Collection and Removal System Parameters			
Prepared By: G. Taylor Grant	**Date:** 04/07/2020	**Checked By:** Darrel J. Packard	**Date:** 04/09/2020

Calculations demonstrate that fluid from a small hole (0.08 inch) (*Requirements for Hazardous Waste Landfill Design, Construction, and Closure*, EPA/625/4-89/022, 1989, p. 122) at the furthest end of the basin, under a low head situation, would travel to the sump in less than 24 hours (*Calculations for Liquid Effluent Retention Facility Part B Permit Application*, HNF-SD-LEF-TI-005, 1997). Additional calculations indicate the capacity of the pump to remove leachate is sufficient to allow time to readily identify a leak and activate emergency procedures (HNF-SD-LEF-TI-005, 1997).

The fluid level in each leachate sump is required to be maintained below 13 inches to prevent significant liquid backup into the drainage layer. The leachate pump is activated when the liquid level in the sump reaches about 11 inches, and is shut off when the sump liquid level reaches about 7 inches. This operation may be done either manually or automatically. Liquid level control is accomplished with conductivity probes that trigger relays selected specifically for application to submersible pumps and leachate fluids. A flow meter/totalizer on the leachate return pipe measures fluid volumes pumped and pumping rate from the leachate collection sumps, and indicates volume and flow rate on local readouts. In addition, a timer on the leachate pump tracks the cumulative pump operating time. Other instrumentation provided is real-time continuous level monitoring with readout at the catch basin. Leachate levels are monitored at least weekly. A sampling port is provided in the leachate piping system at the catch basin. The leak rate through the primary liner can be calculated using two methods: 1) measured as the leachate flow meter/totalizer readings (flow meters/totalizers are located on the outflow line from the collection sumps in the bottom of the LERF Basins), and 2) calculated using the pump operating time readings multiplied by the pump flow rate (the pump runs at a constant flow rate). Calculations using either method are sufficient for compliance. For more information on inspections, refer to Addendum I.

The stainless steel leachate pump delivers 5 gallons per minute. The leachate pump returns draw liquid from the sump via 1.5-inch pipe and discharges into the basin through 1.5-inch high-density polyethylene pipe.

C.5.7 Construction Quality Assurance

The construction quality assurance plan and complete report of construction quality assurance inspection and testing results are provided in *242-A Evaporator Interim Retention Basin Construction Quality Assurance Plan* (CQAPLN2.QS.1149, Rev. 4, KEH 1991). A general description of construction quality assurance procedures is outlined in the following paragraphs.

For excavation of the basins and construction of the dikes, regular inspections were conducted to ensure compliance with procedures and drawings, and compaction tests were performed on the dike soils.

For the soil/bentonite layer, test fills were first conducted in accordance with EPA guidance to demonstrate compaction procedures and to confirm compaction and permeability requirements can be met. The ratio of bentonite to soil and moisture content was monitored; lifts did not exceed 6 inches before compaction, and specific compaction procedures were followed. Laboratory and field tests of soil properties were performed for each lift and for the completed test fill. The same suite of tests was conducted for each lift during the laying of the soil/bentonite admixture in the basins.

Geotextiles and geomembranes were laid in accordance with detailed procedures and quality assurance programs provided by the manufacturers and installers. These included destructive and nondestructive tests on the geomembrane seams, and documentation of field test results and repairs.

C.5.8 Proposed Action Leakage Rate and Response Action Plan

An action leakage rate limit is established where action must be taken due to excessive leakage from the primary liner. The action leak rate is based on the maximum design flow rate the leak detection system can remove without the fluid head on the bottom liner exceeding 12 inches. The limiting factor in the leachate removal rate is the hydraulic conductivity of the drainage gravel. An action leakage rate

(also called the rapid or large leak rate) of 2,100 gallons per acre per day was calculated for each basin (*Calculation of the Rapid or Large Leak Rate for LERF Basins in the 200 East Area*, WHC-SD-EN-TI-009, 1992).

When it is determined that the action leakage rate has been exceeded, the response action plan will follow the actions in WAC 173-303-650(11)(b) and (c), which includes notification of Ecology in writing within 7 days, assessing possible causes of the leak, and determining whether waste receipt should be curtailed and/or the basin emptied.

C.5.9 Dike Structural Integrity Engineering Certification

The structural integrity of the dikes was certified attesting to the structural integrity of the dikes, signed by a Qualified, Registered Professional Engineer.

C.5.10 Management of Ignitable, Reactive, or Incompatible Wastes

Although ignitable or reactive aqueous waste might be received in small quantities at LERF, such aqueous waste is mixed with dilute solutions in the basins, removing the ignitable or reactive characteristics. For compatibility requirements with the LERF liner, refer to Addendum B, Waste Analysis Plan.

C.5.11 Cover Construction, Materials, and Operation

Each basin is equipped with a floating cover stretched over each basin above the primary liner. The floating covers prevent evaporation and intrusion from dust, precipitation, vegetation, animals, and birds. The three LERF Basins 42, 43, and 44 either have a very low-density polyethylene cover (VLDPE), or a chlorosulfonated polyethylene (CSPE) cover.

Both VLDPE and CSPE covers contain carbon black for UV light protection, and anti-oxidants to prevent heat degradation. Both cover materials were determined to be compatible with the LERF Basin waste acceptance criteria. The VLDPE covers have seaming enhancers to improve the covers ability to be welded; while the CSPE cover uses modern seaming equipment that does not need seaming enhancers for the material to perform its required function. Typical manufacturer's limited warranty for weathering of VLDPE products is 20-years (Poly America, undated), whereas CSPE provides a 30-year limited manufacturer's warranty for weathering. This provides a margin of safety for the anticipated use of the LERF for aqueous waste storage.

The covers are anchored and tensioned at the concrete wall at the top of the dikes, using a patented mechanical tensioning system. Figure C.15 depicts the tension mechanism and the anchor wall at the perimeter of each basin. A patented tensioning system is employed to prevent wind from lifting the cover and automatically accommodate changes in liquid level in the basins. The cover tension mechanism consists of a cable running from the flexible geosynthetic cover over a pulley on the tension tower (located on the concrete anchor wall) to a dead man anchor. These anchors (blocks) hang from the cables inside of the tension towers. The anchor wall also provides for solid attachment of the liner layers and the cover, using a 1/4-inch batten and neoprene gasket to bolt the layers to the concrete wall, effectively sealing the basin from the intrusion of light, precipitation, and airborne dust (Figure C.15). Thermal stresses also are experienced by the floating cover. Sufficient slack was included in the design to accommodate thermal contraction and expansion.

C.6 Air Emissions Control

This section addresses the 200 Area ETF requirements of Air Emission Standards for Process Vents, under 40 CFR 264, Subpart AA (WAC 173-303-690 incorporated by reference) and Subpart CC. The requirements of 40 CFR 264, Subpart BB (WAC 173-303-691) is not applicable because aqueous waste with 10 percent or greater organic concentration would not be acceptable for processing at the ETF.

DOCUMENT RELEASE AND CHANGE FORM

Prepared For the U.S. Department of Energy, Assistant Secretary for Environmental Management
By Washington River Protection Solutions, LLC., PO Box 850, Richland, WA 99352
Contractor For U.S. Department of Energy, Office of River Protection, under Contract DE-AC27-08RV14800

TRADEMARK DISCLAIMER: Reference herein to any specific commercial product, process, or service by trade name, trademark, manufacturer, or otherwise, does not necessarily constitute or imply its endorsement, recommendation, or favoring by the United States government or any agency thereof or its contractors or subcontractors. Printed in the United States of America.

Release Stamp

DATE: May 27,2020

HANFORD RELEASE

1. **Doc No:** RPP-CALC-63780 **Rev.** 00

2. **Title:**
LERF Basin 41 Buried Piping Analysis

3. **Project Number:** T1P226 ☐N/A

4. **Design Verification Required:** ☐Yes ☒No

5. **USQ Number:** ☒ N/A RPP-27195

6. **PrHA Number** **Rev.** ☒ N/A

Clearance Review Restriction Type: public

7. **Approvals**

Title	Name	Signature	Date
Clearance Review	Raymer, Julia R	*Raymer, Julia R*	05/27/2020
Design Authority	Wilson, Nathaniel W	*Wilson, Nathaniel W*	05/04/2020
Checker	Huisingh, Jeffrey S	*Huisingh, Jeffrey S*	05/13/2020
Document Control Approval	Meinecke, Kathryn R	*Meinecke, Kathryn R*	05/27/2020
Environmental Protection	Wall, Jeremy M	*Wall, Jeremy M*	05/14/2020
Originator	Williams, Jacob D	*Williams, Jacob D*	05/13/2020
Other Approver	Lovelady, James T	*Lovelady, James T*	05/14/2020
Other Approver	Dorsh, Paul M	*Dorsh, Paul M*	05/13/2020
Responsible Engineering Manager	Huntington, Matthew R	*Huntington, Matthew R*	05/14/2020

8. **Description of Change and Justification**

Original issue.

This calculation documents the evaluation of four, new, double-containment fiberglass reinforced plastic (FRP) pipe lines in support of the Liquid Effluent Retention Facility (LERF) Basin 41 Design project. This calculation evaluates the adequacy of these lines relative to deadweight, seismic, wind, and other design loads as specified in TFC-ENG-STD-06, and the American Society of Mechanical Engineers (ASME) B31.3 Process Piping Code. The International Organization for Standardization's (ISO) code for glass-reinforced plastics (GRP) piping, ISO 14692, is utilized as a supplemental verification of system flexibility as well as a means to determine support and anchor loads.

9. **TBDs or Holds** ☒N/A

10. **Related Structures, Systems, and Components**

a. **Related Building/Facilities** ☐N/A	b. **Related Systems** ☐N/A	c. **Related Equipment ID Nos. (EIN)** ☒N/A
ETF FACILITIES LERF FACILITIES	ETF LERF	

11. **Impacted Documents – Engineering** ☐N/A

Document Number	Rev.	Title
RPP-CALC-63779	00	LERF Basin 41 Catch Basin Piping Analysis

12. **Impacted Documents (Outside SPF):**

N/A

13. **Related Documents** ☐N/A

Document Number	Rev.	Title
H-2-79613 SH 001	05	PIPING PLAN CATCH BASIN 242AL-42
H-2-79616 SH 001	03	PIPING SECTIONS CATCH BASINS 242AL-42-43-44
H-2-79633 SH 001	02	PIPE SUPPORTS
H-2-79634 SH 001	03	PIPE SUPPORTS
H-2-838765 SH 001	00	LERF BASIN 41 MECHANICAL GENERAL ARRANGEMENT
H-2-838765 SH 002	00	LERF BASIN 41 MECHANICAL SECTIONS AND DETAILS
H-2-838765 SH 003	00	LERF BASIN 41 MECHANICAL DETAILS
H-2-838765 SH 004	00	LERF BASIN 41 MECHANICAL SECTIONS AND DETAILS
H-2-838765 SH 005	00	LERF BASIN 41 MECHANICAL SECTIONS AND DETAILS
H-2-838765 SH 006	00	LERF BASIN 41 MECHANICAL SECTIONS
H-2-838765 SH 007	00	LERF BASIN 41 MECHANICAL SECTIONS
H-2-838765 SH 008	00	LERF BASIN 41 MECHANICAL DETAILS
H-2-88772 SH 001	02	P I P I N G S E C T I O N S
H-2-88773 SH 001	02	P I P E S U P P O R T S
MT-50497	00	Liquid Effluent Retention Facility (LERF) Basin 41

DOCUMENT RELEASE AND CHANGE FORM	**Doc No:** RPP-CALC-63780 **Rev.** 00

14. **Distribution**

Name	**Organization**
Angevine, Brennan T	MISSION ANALYSIS ENGINEERING
Blaak, Whitney S	COGNIZANT SYSTEM ENGINEERING
Demiter, Scott M	ETF OPERATIONS
Foster, Jim	242-A/AW/ETF OPERATIONS
Goessmann, Glen E	ENGINEERING PROGRAMS
Greenhalgh, Aaron M	TANK FARM PROJECTS ENGINEERING
Halgren, Dale L	ETF ENGINEERING
Harris, John W	SAFETY PROGRAM SERVICES RC/P
Joslyn, Cameron C	ETF ENGINEERING
Lovelady, James T	DESIGN SERVICES
McFerran, Brandon E	242-A/AW/ETF OPERATIONS
Omberg Carro, Susan K	NUCLEAR SAFETY
O'Meara, Sean P	ETF ENGINEERING
Powers, Daniel J	ETF ENGINEERING
Roosendaal, Gene D	TFP PROJECT MANAGEMENT
Rutherford, Wally	ETF ENGINEERING
Sackett, Tom E	TANK FARM PROJECTS
Samoska, Jerry A	INSTRUMENT & CNTRL ENGINEERING
Shultz, Milton V	NUCLEAR SAFETY
Smith, Gregory E	TANK FARM PROJECTS ENGINEERING
Smoot, Bill R	TFP RADCON
Swanson, Brad L	242-A/AW/ETF OPERATIONS
Wall, Jeremy M	RETRVL & CLOSURE/PROJ ENV CMPL
Wilson, Nathaniel W	ETF PROJECTS ENGINEERING

RPP-CALC-63780
Revision 0

LERF Basin 41 Buried Piping Analysis

Prepared by

JD Williams
Sargent & Lundy for Washington River Protection Solutions, LLC

Date Published
May 2020

Prepared for the U.S. Department of Energy
Office of River Protection

Contract No. DE-AC27-08RV14800

Approved for Public Release;
Further Dissemination Unlimited

RPP-CALC-63780, Rev. 0

Sargent & Lundy Engineering Services, Inc.	**CALCULATION COVER SHEET**	**Page No.** 1 of 192 **Date** 5/13/20 **Rev. No.** 0 **Calculation No:** S54413.024-M-001

Project No.	**Project Title:**	**Client:**
S54413.024	LERF Basin 41 Design	Washington River Protection Solutions, LLC

Title:

LERF Basin 41 Buried Piping Analysis

Purpose and Objective:

This calculation documents the evaluation of four, new, double-containment fiberglass reinforced plastic (FRP) pipelines in support of the Liquid Effluent Retention Facility (LERF) Basin 41 Design project. This calculation evaluates the adequacy of these lines relative to deadweight, seismic, wind, and other design loads as specified in TFC-ENG-STD-06, and the American Society of Mechanical Engineers (ASME) B31.3 Process Piping Code. The International Organization for Standardization's (ISO) code for glass-reinforced plastics (GRP) piping, ISO 14692, is utilized as a supplemental verification of system flexibility as well as a means to determine support and anchor loads.

Rev. No.	Total Pages		Prepared By	Checked By	PM/TL
0	192	Print Name/ Sign:	JD Williams, P.E.	JS Huisingh, P.E.	PM Dorsh, P.E.
		Date:	5/13/20	5/13/20	5/13/20

Revision Description (Revision Description/Affected Pages):

Original Issue.

		Print Name/ Sign:			
		Date:			

Revision Description (Revision Description/Affected Pages):

RPP-CALC-63780, Rev. 0

Sargent & Lundy Engineering Services, Inc.

CALCULATION REVIEW CHECKLIST

Project No.	Calculation No.	Rev. No.	Page No.
S54413.024	S54413.024-M-001	0	2 of 192

Items Checked	Accept Y	Accept N	Accept N/A	Description of Resolution for Unacceptable Items
1. Cover sheets properly completed.	√			
2. Calculation sheet headers complete with calculation number, revision number, etc.	√			
3. Calculation sheet contents are legible, accurate, and complete per format.	√			
4. Listed attachments included.	√			
5. Calculation objective clearly described.	√			
6. Criteria are suitable and properly referenced to task specific documents.	√			
7. Assumptions and input data selected, described, reasonable, and attached or referenced to task documents.	√			
8. Calculation method identified and appropriate for the design activity.	√			
9. Calculation results reasonable and correctly described in results and conclusions.	√			
10. Physical property calculations generated by CAD software verified via hand calculations.			√	
11. Computer program identified with version and revision.	√			
12. Computer input/output provided or referenced and reasonable.	√			
13. Computer run traceable to calculation (file #, etc.).	√			
14. Computer input/output data and problem type within validation/verification range of use.	√			
15. Computer program validation/verification addressed.	√			
16. Computer operating system in use for calculation preparation is the same as when the software was verified on machine.	√			

Calculation Checking Method	√	Applicable Pages
1. Direct Step-by-Step Check	√	All.
2. Reference Chart(s) or Book(s) Comparison (Append Documentation)		
3. Alternate Calculation (Append Documentation)		

Comments:

Preparer (Print Name and Sign):	Date:
J. D. Williams	5/13/20
Checker (Print Name and Sign):	**Date:**
J.S. Huisingh J.S. Huisingh	5/13/20

Signatures obtained only after discrepancies are corrected and comments are resolved.

CALCULATION SHEET

Project No. S54413.024	**Calculation No.** S54413.024-M-001	**Rev.** 0	**Page No.** 3 of 192
Title: LERF Basin 41 Buried Piping Analysis			
Prepared By: JD Williams	**Date:** 5/13/20	**Checked By:** JS Huisingh	**Date:** 5/13/20

TABLE OF CONTENTS

1.0 PURPOSE 5
2.0 METHODOLOGY 5
3.0 DESIGN INPUTS 20
4.0 ASSUMPTIONS 23
5.0 COMPUTER SOFTWARE 24
6.0 RESULTS 24
7.0 REFERENCES 27
8.0 CALCULATIONS 29

Appendices

Appendix A
LERF Piping Drawings

Appendix B
AutoPIPE Model Isometric Views

Appendix C
Model Input and Output Report

Attachments

Attachment 1
AutoPIPE SOIL Modeling Information

Attachment 2
New FRP Pipe Data (Conley Composites)

Attachment 3
Existing FRP Pipe Data

Attachment 4
AWWA M54 Fiberglass Pipe Design Data

Attachment 5
67246-024-RFI-002 – Fluid Specific Gravity

Attachment 6
Pipe Insulation Data

Attachment 7
Conley Composites AWWA M45 External Loading Calculations

Figures

Figure 2-1. Conley Composites ISO 14692 Design Envelopes. 11
Figure 2-2. Representation of Primary Pipe Support Guide. 13
Figure 2-3. Double Containment Pipe End Closures 14
Figure 2-4. Support-Anchor Detail 14
Figure 2-5. Conley Double-Containment Tee 16
Figure 2-6. New Tee & Existing Pipe Splicing Configuration 17
Figure 6-1. Maximum Pipe Stress in New FRP Pipe 25

Tables

Table 2-1. Summary of Design Conditions. (3 sheets) 6
Table 6-1. Bounding Support Reaction Loads on New Pipe Supports. 26
Table 6-2. Bounding Support Reaction Loads on Existing Pipe Supports. 26

Acronyms

AISC	American Institute of Steel Construction
ALA	American Lifelines Alliance
ASCE	American Society of Civil Engineers
ASME	American Society of Mechanical Engineers
DCR	Demand-to-Capacity Ratio
FRP	Fiber-Reinforced Plastics
GRP	Glass-Reinforced Plastics
HDB	Hydrostatic Design Basis Stress
HDS	Hydrostatic Design Stress
ISO	International Organization for Standardization
LERF	Liquid Effluent Retention Facility
WT	Waste Transfer
WTP	Waste Treatment Plant

Sargent & Lundy Engineering Services, Inc.

CALCULATION SHEET

Project No. S54413.024	**Calculation No.** S54413.024-M-001	**Rev.** 0	**Page No.** 5 of 192
Title: LERF Basin 41 Buried Piping Analysis			
Prepared By: JD Williams	**Date:** 5/13/20	**Checked By:** JS Huisingh	**Date:** 5/13/20

1.0 PURPOSE

This calculation documents the evaluation of four, new, double-containment fiberglass reinforced plastic (FRP) pipelines in support of the Liquid Effluent Retention Facility (LERF) Basin 41 Design project. This calculation evaluates the adequacy of these lines relative to deadweight, seismic, wind, and other design loads as specified in TFC-ENG-STD-06, and the American Society of Mechanical Engineers (ASME[1]) B31.3 Process Piping Code. The International Organization for Standardization's (ISO) code for glass-reinforced plastics (GRP) piping, ISO 14692, is utilized as a supplemental verification of system flexibility as well as a means to determine support and anchor loads.

2.0 METHODOLOGY

The majority of the pipe is buried in long, straight runs, with relatively short sections of above-ground piping found at the LERF catch basins, where connections are made to new and existing piping. Two of the new lines branch off of existing buried piping (a 3"x6" evaporator condensate line [3" EVAP COND-PC5000-M17] and a 4"x8" waste treatment plant line [4"-WTP-001-M17]) and run to the new, above-ground stainless steel piping at the catch basin of the new LERF Basin 41. The other two new lines run between the new, above-ground stainless steel piping at the new LERF Basin 41 and the existing FRP piping at the catch basin of the existing LERF Basin 42. These new lines are depicted in design drawing H-2-838765.

In this section, a description is given of how and why the provisions of Chapter VII of the ASME B31.3 Code, which pertains to non-metallic piping, are utilized in this calculation. Section 2.2 of this calculation (see below) contains a description of why this different approach to piping analysis was chosen instead of a more typical approach for ASME B31.3 stress analysis as has been done for metallic piping systems. Section A319.4.1 within the "Flexibility & Support" section of B31.3's Chapter VII states, "No formal analysis is required for a piping system that … (c) is laid out with a conservative margin of inherent flexibility, or employs joining methods or expansion joint devices, or a combination of these methods, in accordance with manufacturers' instructions." Following guidance from FRP manufacturer Conley Composites, the general arrangement of the piping system found in design drawing H-2-838765 was developed, including (but not limited to) the use of expansion joints near changes in pipe material (i.e., to stainless steel piping), regularly-spaced guides between the primary and secondary piping of double containment pipes, anchor-type pipe supports near changes in direction, interlocking unions for long runs of double containment pipes, and deadweight supports at valve locations. Therefore, the B31.3 requirement from Section A319.4.1 is judged to have been met.

The minimum wall thickness check for internal pressure per ASME B31.3, Section A304.1.2(c) is performed in Section 8.5 of this calculation. The service design factor spoken of in section A304.1.2(c) and used in the thickness check was conservatively chosen as described in the Design Inputs. The design stress in the wall thickness check (Equation 26c of Chapter VII of B31.3) is the HDB stress value that is addressed in a Section 2.2. Results for this check are summarized in the Results section.

Conley Composites provided pipe external loading calculations following the AWWA M45, Fiberglass Pipe Design manual. These were done for the secondary containment pipes (6-inch and 8-inch) at burial depths of 2

[1] ASME is the registered trademark of the American Society of Mechanical Engineers, New York, NY.

feet and 12 feet. There are no wheel loads applied in the calculations since there are no crane or other vehicle crossings near where the new analyzed pipes will be installed. The Conley calculations satisfy the B31.3 external loading requirement in Section A302.3.3(c)(2).

To provide a supplemental means of verifying the inherent flexibility of the subject transfer piping, it is modeled as shown on the design drawing H-2-838765 using the Bentley AutoPIPE™[2] piping analysis software. (See Section 5.0 for relevant computer and analytical software information and Appendix B for model isometric images.) This supplemental analysis evaluates this piping that is designed and fabricated with materials in accordance with the ASTM standards listed in ASME Code B31.3-2016 (which is the code of record per RPP-SPEC-63632—see Design Input 2) using the ISO 14692-2002 code for *Petroleum and Natural Gas Industries – Glass-Reinforced Plastics (GRP) Piping* to analyze it in AutoPIPE. Although the pipe stresses are analyzed using the ISO code, the ASME B31.3 design conditions are addressed in the next section.

2.1 Summary Tabulation of ASME B31.3 Code Design Conditions

Table 2-1 below, presents a summary discussion of ASME B31.3 design conditions.

Table 2-1. Summary of Design Conditions. (5 sheets)

ASME B31.3, Section 301 Design Condition	Summary of Requirement	Description of Application of Requirement in Analysis
301.2 Design Pressure		
301.2.1 General	The design pressure of each component in a piping system shall be not less than the pressure at the most severe condition of coincident internal or external pressure and temperature (minimum or maximum) expected during service ...	The selection of components has considered design pressure as appropriate. The system design conditions are addressed in the AutoPIPE supplemental analysis.
301.2.2 Required Pressure Containment or Relief	Provision shall be made to safely contain or relieve … any pressure to which the piping may be subjected. Piping not protected by a pressure-relieving device, or that can be isolated from a pressure-relieving device, shall be designed for at least the highest expected pressure.	The deadhead pressure of new Basin 41 pump is ~100 psig (RPP-CALC-63650 Att. 2), which will not challenge 150 psig design pressure of new piping. Given 100 psig max. op. pressure of existing piping, new piping design pressures will likewise not be challenged.

[2] Bentley AutoPIPE is a registered trademark of Bentley Systems, Exton, PA.

Sargent & Lundy Engineering Services, Inc.

CALCULATION SHEET

Project No. S54413.024	**Calculation No.** S54413.024-M-001	**Rev.** 0	**Page No.** 7 of 192
Title: LERF Basin 41 Buried Piping Analysis			
Prepared By: JD Williams	**Date:** 5/13/20	**Checked By:** JS Huisingh	**Date:** 5/13/20

Table 2-1. Summary of Design Conditions. (5 sheets)

ASME B31.3, Section 301 Design Condition	Summary of Requirement	Description of Application of Requirement in Analysis
301.3 Design Temperature		
301.3.1 Design Minimum Temperature	The design minimum temperature is the lowest component temperature expected in service. This temperature may establish special design requirements and material qualification requirements. See also paras. 301.4.4 and 323.2.2.	The minimum design ambient temperature is -25º F for FRP pipes above grade and exposed to the atmosphere. However, the minimum temperatures used in the AutoPIPE supplemental analysis for the buried portions of piping is 32º F (see *Design Inputs*) for cold contents (boundingly low) or empty lines. These are appropriately addressed in the AutoPIPE supplemental analysis and do not mandate special design requirements or material qualifications for this system.
301.3.2 Uninsulated Components	*Describe any special, justified allowances for considering piping and component temperatures to be other than that of the fluid design temperatures.* (Content summarized.)	Carrier piping temperature is taken to be equal to that of the contents including the case when the system is off and the piping and contents cool down to the ambient cold temperatures. (See *Design Inputs*) (See row above regarding 32° F piping.) All above ground piping is insulated.
301.3.3 Externally Insulated Piping	The component design temperature shall be the fluid temperature unless calculations, tests, or service experience based on measurements support the use of another temperature. Where piping is heated or cooled by tracing or jacketing, this effect shall be considered in establishing component design temperatures.	Addressed in the AutoPIPE model supplemental analysis.
301.3.4 Internally Insulated Piping	The component design temperature shall be based on heat transfer calculations or tests.	N/A – The assembly is not internally insulated.
301.4 Ambient Effects		
301.4.1 Cooling – Effects on Pressure	The cooling of a gas or vapor in a piping system may reduce the pressure sufficiently to create an internal vacuum. In such a case, the piping shall be capable of withstanding the external pressure at the lower temperature, or provision shall be made to break the vacuum.	N/A: These systems are designed to transfer and distribute liquid (~water) at temperatures that preclude significant vapor content. Also, the piping is free draining into the LERF basins because valves are not expected to be closed during operation. Due to this free-draining nature, when not operating, fluid is not expected to be trapped between valves in the system.

Sargent & Lundy Engineering Services, Inc.

CALCULATION SHEET

Project No. S54413.024	**Calculation No.** S54413.024-M-001	**Rev.** 0	**Page No.** 8 of 192
Title: LERF Basin 41 Buried Piping Analysis			
Prepared By: JD Williams	**Date:** 5/13/20	**Checked By:** JS Huisingh	**Date:** 5/13/20

Table 2-1. Summary of Design Conditions. (5 sheets)

ASME B31.3, Section 301 Design Condition	Summary of Requirement	Description of Application of Requirement in Analysis
301.4.2 Fluid Expansion Effects	Provision shall be made in the design either to withstand or to relieve increased pressure caused by the heating of static fluid in a piping component. …	N/A: The piping is free draining into the LERF basins because valves are not expected to be closed during operation. Due to this free-draining nature, when not operating, fluid is not expected to be trapped between valves in the system.
301.4.3 Atmospheric Icing	Where the design minimum temperature of a piping system is below 0 °C (32 °F), the possibility of moisture condensation and buildup of ice shall be considered and provisions made in the design to avoid resultant malfunctions. …	N/A - Valves on above-ground piping are insulated and heat-traced, so build-up of ice and resultant malfunctioning of valves is precluded.
301.4.4 Low Ambient Temperature	Consideration shall be given to low ambient temperature conditions for displacement stress analysis.	Consideration for low ambient temperature conditions is addressed in this evaluation.
301.5 Dynamic Effects		
301.5.1 Impact	Impact forces caused by external or internal conditions (including changes in flow rate, hydraulic shock, liquid or solid slugging, flashing, and geysering) shall be taken into account in the design of piping.	The LERF piping is located in a remote location and is not expected to experience any external impact conditions. Changes in flow rates, liquid slugging, etc. may be encountered, and are discussed in the *Methodology* section and addressed in the AutoPIPE model as judged to be appropriate. Geysering is not an issue since maximum system operating temperature (150 ºF, see *Design Inputs*) will not cause boiling. Flashing is not an issue since the system pressures and temperatures will not cause vaporization of the fluid. Fluid transient loads are also discussed in the *Methodology* section.
301.5.2 Wind	The effect of wind loading shall be taken into account in the design of exposed piping. …	Addressed in the AutoPIPE model supplemental analysis.
301.5.3 Earthquake	The effect of earthquake loading shall be taken into account in the design of piping. The analysis considerations and loads may be as described in ASCE 7. …	Earthquake loading is addressed in the AutoPIPE model supplemental analysis.
301.5.4 Vibration	Piping shall be designed, arranged, and supported so as to eliminate excessive and harmful effects of vibration that may arise from such sources as impact, pressure pulsation, turbulent flow vortices, resonance in compressors, and wind.	N/A – There are no significant sources of vibration for the subject buried piping and above-ground piping.
301.5.5 Discharge Reactions	Piping shall be designed, arranged, and supported so as to withstand reaction forces due to let-down or discharge of fluids.	Applicable pressure and fluid loadings are addressed in the subsections below in the *Methodology* section.

Sargent & Lundy Engineering Services, Inc.

CALCULATION SHEET

Project No. S54413.024	**Calculation No.** S54413.024-M-001	**Rev.** 0	**Page No.** 9 of 192
Title: LERF Basin 41 Buried Piping Analysis			
Prepared By: JD Williams	**Date:** 5/13/20	**Checked By:** JS Huisingh	**Date:** 5/13/20

Table 2-1. Summary of Design Conditions. (5 sheets)

ASME B31.3, Section 301 Design Condition	Summary of Requirement	Description of Application of Requirement in Analysis
301.6 Weight Effects		
301.6.1 Live Loads	These loads include the weight of the medium transported or the medium used for test. Snow and ice loads due to both environmental and operating conditions shall be considered.	Fluid weight, fluid thrust loads at bends, and snow and ice loads are considered for this piping. Fluid thrust loads are addressed in the *Methodology* section. Due to the relatively small diameter of the insulated piping and the low sustained load DCRs, the potential snow and ice loads on the above-ground portions of the piping are considered insignificant and are not included in the supplemental analysis.
301.6.2 Dead Loads	These loads consist of the weight of piping components, insulation, and other superimposed permanent loads supported by the piping.	Addressed in the AutoPIPE model supplemental analysis.
301.7 Thermal Expansion and Contraction Effects		
301.7.1 Thermal Loads Due to Restraints	These loads consist of thrusts and moments that arise when free thermal expansion and contraction of the piping are prevented by restraints or anchors.	Addressed in the AutoPIPE model supplemental analysis.
301.7.2 Loads Due to Temperature Gradients	These loads arise from stresses in pipe walls resulting from large rapid temperature changes or from unequal temperature distribution as may result from a high heat flux through a comparatively thick pipe or stratified two-phase flow causing bowing of the line.	N/A - Because the transfer piping is not subject to large, rapid temperature changes or significant, unequal temperature distribution, this loading will not be analyzed in this calculation.
301.7.3 Loads Due to Differences in Expansion Characteristics	These loads result from differences in thermal expansion where materials with different thermal expansion coefficients are combined, as in bimetallic, lined, jacketed, or metallic–nonmetallic piping.	Addressed in the AutoPIPE model supplemental analysis.
301.8 Effects of Support, Anchor, and Terminal Movement	The effects of movements of piping supports, anchors, and connected equipment shall be taken into account in the design of piping. These movements may result from the flexibility and/or thermal expansion of equipment, supports, or anchors; and from settlement, tidal movements, or wind sway.	Addressed in the AutoPIPE model supplemental analysis.
301.9 Reduced Ductility Effects	The harmful effects of reduced ductility shall be taken into account in the design of piping. The effects may, for example, result from welding, heat treatment, forming, bending, or low operating temperatures, including the chilling effect of sudden loss of pressure on highly volatile fluids. Low ambient temperatures expected during operation shall be considered.	Due to the nature of the materials used (FRP piping), reduced ductility effects are not necessary for this calculation.
301.10 Cyclic Effects	Fatigue due to pressure cycling, thermal cycling, and other cyclic loadings shall be considered in the design of piping. …	N/A – No significant cyclic effects are expected.

Table 2-1. Summary of Design Conditions. (5 sheets)

ASME B31.3, Section 301 Design Condition	Summary of Requirement	Description of Application of Requirement in Analysis
301.11 Air Condensation Effects	At operating temperatures below −191° C (−312° F) in ambient air, condensation and oxygen enrichment occur. These shall be considered in selecting materials, including insulation, and adequate shielding and/or disposal shall be provided.	N/A – Because the transfer piping is not subject to −312° F and below, air condensation effects need not be analyzed in this calculation.

2.2 Applications of the ASME B31.3 Code and the ISO 14692 Code for FRP Piping

As stated previously in this calculation, the GRP ISO 14692 piping code (hereafter also referred to as "the code" [with a lower case "c"]), is utilized in a supplemental pipe stress analysis to verify system flexibility. This supplemental analysis is also used as a means to extract support and anchor loads from the new LERF Basin 41 FRP piping. Typically, the ASME B31.3 Process Piping Code (hereafter also referred to as "the Code" [capitalized]) is used to analyze process piping, but the B31.3 Code does not provide in its appendices the required analysis data such as allowable stress values, thermal expansion coefficients, and modulus of elasticity values at design temperatures for filament wound epoxy FRP pipe like it does for metallic pipe.

In B31.3 Chapter VII (*Nonmetallic Piping and Piping Lined With Nonmetals*), Section A302.3 (*Allowable Stresses and Other Design Limits*) states that Table B-3, *Listed Specifications for Filament Wound and Centrifugally Cast Reinforced Thermosetting Resin and Reinforced Plastic Mortar Pipe,* provides listings of specifications that meet the criteria of paragraph A302.3.2(c). Listed in this table are ASTM D2996 and D2997, which are the standard specifications for filament-wound fiberglass pipe and centrifugally cast fiberglass pipe, respectively, which are employed in this design.

Paragraph A302.3.2(c) of the Code, mentioned above, states that the hydrostatic design basis stress (HDB) values for materials listed in Table B-3 shall be obtained by the procedures in ASTM D2992 and are valid only at 73° F. It also states that the hydrostatic design stress (HDS) shall be obtained by multiplying the HDB by a service (design) factor selected for the application and that when using the static HDB, the service (design) factor *F* shall not exceed 0.5. The B31.3 Code also states that the Code's intent in not to specify such service factors but leaves this decision to the designer to decide in consideration of service conditions and the engineering properties of the selected materials.

Paragraph A302.3(a) states that the use of HDS for calculations other than pressure design has not been verified and that the bases for determining allowable stresses and pressures are outlined in para. A302.3.2 (which was discussed earlier). In para. A302.3.3(c), the Code refers to non-B31.3 codes and standards for use as the basis of stress limits from external loadings. Here, the Code points away from its own content to other ASTM standards and codes to develop an HDB/HDS and to qualify the FRP pipe for loads other than pressure loads.

Conley Composites (manufacturer of ASTM D2996 filament-wound fiberglass pipe) performed the ASTM D2992 calculations for the HDB (see Attachment 2) after testing their pipe following that standard D2992. This demonstrated that their filament-wound pipe has HDB values of 16,000 psi at 75° F and 8,000 psi at 250° F.

Because the B31.3 Code cannot use this information directly to analyze the pipe for more than simple pressure loading, and because AutoPIPE has the option to use the ISO 14692 code, which facilitates the selection of service factors to aid in the evaluation of GRP, this latter code was utilized in the supplemental analysis to verify system flexibility. Conley developed the required idealized short-term and long-term design envelopes per the ISO 14692 code (shown in Figure 2, Part 3 of that code) which is used in AutoPIPE to determine allowable stresses. Note the calculated design envelopes in Figure 2-1 below with added descriptive terms at identified node points.

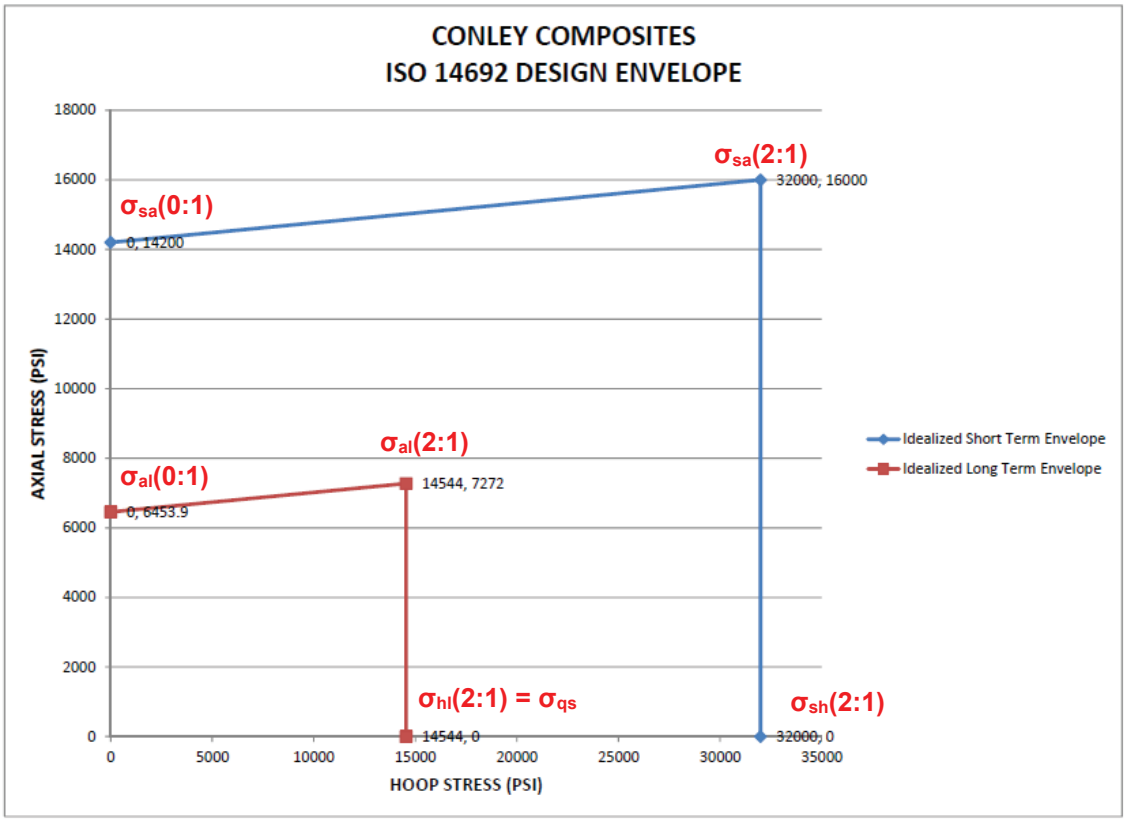

Figure 2-1. Conley Composites ISO 14692 Design Envelopes.

Similar to ASTM D2992's use of HDB, the ISO 14692 code uses what it calls the "qualified stress." A Conley Composites representative explained in detail (in Attachment 2) that the ISO 14692 code uses the ASTM D2992 test data to arrive at a qualified stress in a different way that he describes below:

> *ASTM D2992 has the manufacturer calculate the Long Term Hydrostatic Strength (LTHS) at 100,000 hrs (~11.5 yrs) and 438,000 hrs (50 yrs) and establishes the Hydrostatic Design Basis (HDB) or allowable hoop stress σ(2:1) based on the range these values fall in. Our calculated values for the LTHS at 100,000 and 438,000 hrs are*

17802 psi and 16719 psi respectively. Following Table 1 of ASTM D2992 our established and published HDB is therefore 16,000 psi with this method as ASTM D2992 correlates an HDB per a given range of calculated LTHS.

As we discussed, the ISO-14692 allows the use of ASTM D2992 to establish the qualified pressure as called out in ISO 14692-2 Table 1 and 6.2.3.1. The difference is that when establishing the qualified stress or pressure, which are relatable through product geometry (diameter and wall thickness), the time interval that is considered is 20 years or 175,200 hrs. ISO 14692 also takes the lower confidence level at this time instead of the mean value or the value established by the regression line. Since ASTM D2992 is establishing a hoop stress and our testing methodology was per ASTM D2992 Procedure B (static pressure) with unrestrained ends, the stress we are evaluating is σ(2:1) for the Lower confidence level at a 20 year time. So when considering ISO 14692 the 20 year lower confidence level hoop stress or $\sigma(2:1)_{20yrLCL}$ is σ_{qs}. This is the ISO 14692 version of HDB, evaluated at the 20 year time with the conservancy that the lower confidence level brings.

He also stated that the qualified stresses arrived at using the ISO 14692 code, used to establish the allowable stress limits for the material, resulted (in the case of Conley's test data) in being more conservative than the values arrived at when directly following ASTM D2992 methods. In addition to using ISO 14692, in order to be more conservative and get more representative results at specific temperatures, the values used in the supplemental analysis for "qualified stress" are the (reduced) "HDB" values that were calculated in Section 8.0 through interpolation between the HDB values provided at 75° F and 250° F by Conley (see Attachment 2).

2.3 Miscellaneous Modeling Notes

The following approaches used or features employed in the AutoPIPE modeling of the subject FRP piping were judged to be significant enough to warrant the discussions provided. Piping loadings considered are discussed in subsequent sections.

2.3.1 Support and Anchorage

The underground pipe lines are a pipe-in-pipe design in which the smaller (3-in. and 4-in. nominal) pipe is the primary (or process or carrier) pipe that is relied upon to confine and convey the fluid while the outer, larger (6-in. and 8-in. nominal) pipe is the secondary (or containment or encasement) pipe to capture any potential leak and drain it to appropriate collection points. Where double-contained pipes are employed, the primary pipe is supported entirely by the secondary pipe via guides (2-degree-of-freedom [four-way] restraints installed within the annulus of the two pipes). Guide supports (see Figure 2-2) are installed inside pipe-in-pipe spools from the manufacturer at maximum spacings of 10 ft (see Attachment 2). These guides allow the primary pipe to slide axially along the interior of the secondary pipe while restraining the primary pipe laterally.

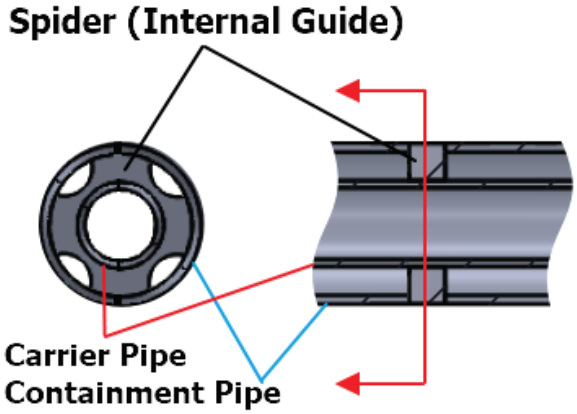

Figure 2-2. Representation of Primary Pipe Support Guide.

There are two locations where interlocking unions are employed to rigidly connect the inner and outer piping. This occurs near the middle of the two long pipe runs between Basins 41 and 42. This is done to accommodate the recommendation from Conley Composites to axially restrain the inner pipe in this way.

The other guide supports in the model are on the encasement pipes (or un-encased primary pipes) where they are connected to vertical steel support members (pipe or HSS) connected to the LERF catch basins or to a concrete anchor footing outside of the basins. These guide supports have small gaps on both sides of the pipe. (See support details on drawing H-2-838765.)

Another type of support used in the model is a V-stop (vertical, two-direction restraint), where the pipe is supported vertically but allowed to slide axially and laterally (with respect to the pipe it supports) and rotate around any axis. There is a large gap at the top of these supports (also called “shoes” in AutoPIPE) so that they can displace vertically upwards without any restraint.

Another support type used on the existing pipe is a Line Stop (axially restraining the pipe). The catch basin at LERF Basin 42 has many angled “kicker”-type steel members welded to vertical support members. At these locations in AutoPIPE, vertical steel members were modeled with line stop supports connected to the top of them (attached to a nearby pipe node point) to simulate the effects of the angled kicker providing axial restraint (with respect to the pipe).

The containment piping is terminated over the LERF Catch Basins as shown on the design drawings (H-2-838765). These end closures are shown in the figure below and are modeled in AutoPIPE by connecting the inner and outer pipes at nearly-coincident nodes using a rigid beam element which anchors the outer pipe to the inner pipe at that location. In reality, these end closure connections are quite rigid and the modeling is representative of the inherent rigidity between the carrier and containment pipes at these locations. It is noted that for the two lines going between Basin 41 and Basin 42, each has an end closure with a vent port at its respective high side (elevation-wise) of the line for pressure testing purposes.

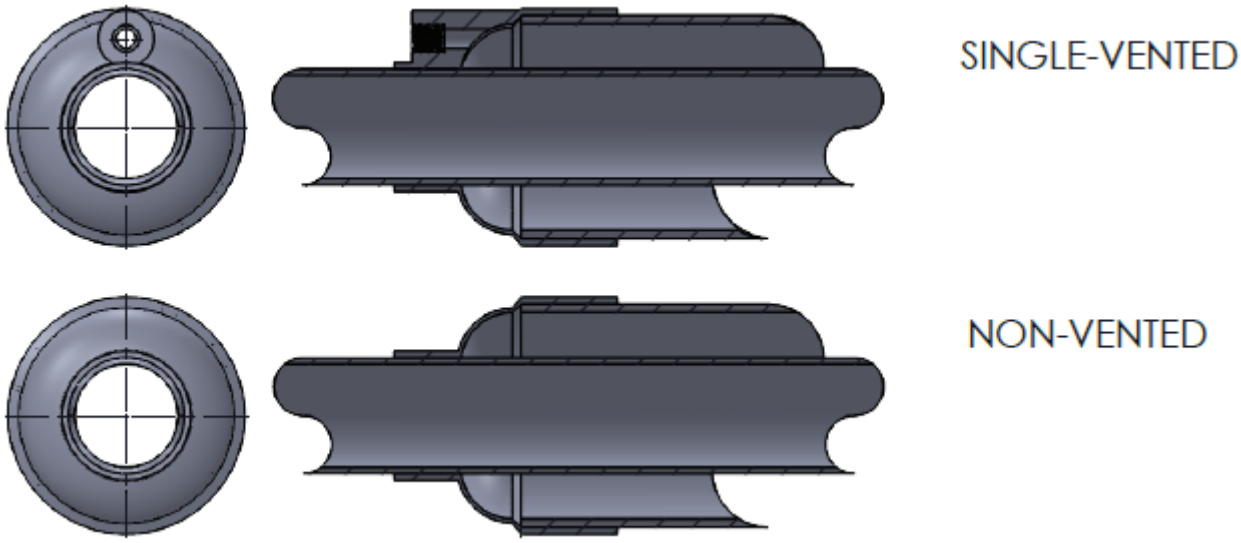

Figure 2-3. Double Containment Pipe End Closures

The last type of pipe support is what shall be called in this calculation a *support-anchor* which is a 5-degree of freedom restraint (not restraining torsion) with the use of dual U-bolts and shear collars as shown in the figure below. These supports are utilized near the 45-degree bend just off of the catch basin at Basin 41. They are modeled in AutoPIPE with their support beams attached directly to the pipe. Although this type of connection restrains 6 degrees of freedom, the imposed fictitious torsional restraint does not significantly affect the system flexibility and overall response.

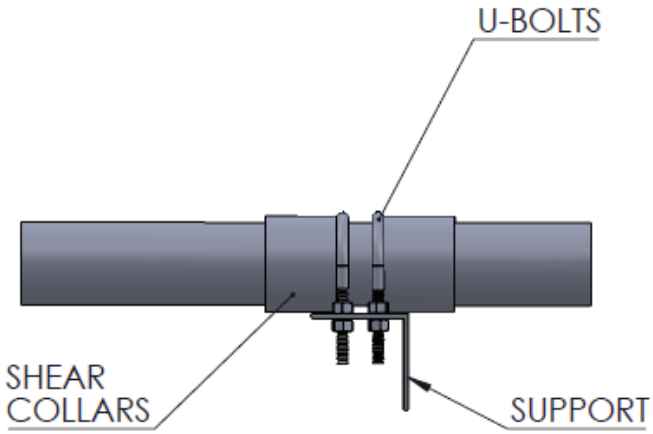

Figure 2-4. Support-Anchor Detail

The anchors (six-degree of freedom restraints) modeled in AutoPIPE are found at the rigid riser connections of the pipes in the two catch basins (LERF Basin 41 and 42); at specified ends of the existing buried pipe within the berm, which are located ~45 feet inside and along the length of the berm, just north of the LERF basins; and

also at a soil penetration point of one existing 12" FRP pipe[3]. See Appendix B for AutoPIPE model screenshots.

2.4 Connections to Existing FRP Pipes

The table below specifies the differences between the existing and new FRP piping and whether or not custom adapters are required at the connections between the existing and new pipes.

Table 2-2. Existing & New FRP Pipe Data.

EXISTING PIPE	Pipe Size	Pipe OD	Manufacturer/Type	Custom Adapter Required?
Evaporator Piping	3"	3.5"	Fibercast FRP Pipe Centrifugally Cast, Epoxy, Centricast III EP	NO
	6"	6.625"		YES
WTP Piping	4"	4.552"	Bondstrand FRP Pipe Filament-wound, Epoxy, Series 4000	YES
	8"	8.678"		YES
NEW PIPE	**Pipe Size**	**Pipe OD**	**Manufacturer/Type**	
	3"	3.47"	Conley FRP Pipe Filament Wound, Epoxy Series 40	
	6"	6.57"		
	4"	4.48"		
	8"	8.60"		

Conley Composites sent the following three points to take note of in preparation to connect to existing FRP pipes (see Conley email in Attachment 2):

> *(1.) When connecting Conley FRP pipe with FRP pipe from a different manufacture, Conley will manufacture an adapter fitting to make the connection if difference in diameter greater than 0.040".*
>
> *(2.) Bonding of FRP pipe is a mechanical bond that relies on good preparation and cleanliness. Epoxy will bond to Epoxy as well as Vinyl FRP pipe.*
>
> *(3.) Generally, it is recommended that an anchor be installed when mating to piping from a different manufacture. In this case, the anchor will not be required. As stated, the buried pipe will see low temperature fluctuations.*

[3] The lateral stiffnesses at the soil penetration point (for the existing pipe) are set to 0 to allow the pipe to grow/displace axially.

Additional notes on those points:

- As shown in the table above, the existing 6", 4", and 8" pipes will require custom adapter fittings from Conley while the existing 3" pipe will only require a standard fitting from Conley.
- All three of the FRP pipe types in the table above are epoxy resin pipes, so bonding will not pose an issue.
- The new Conley pipe is filament wound FRP pipe. The strengths of the existing pipes (filament-wound and centrifugally-cast) are of comparable magnitudes to the new Conley pipe such that when the new piping is shown to be adequate with a conservative margin of safety, adequacy may also be judged of the existing pipes.

The new pipe will tee into the existing pipe using a Conley prefabricated tee-in-tee piece as shown below:

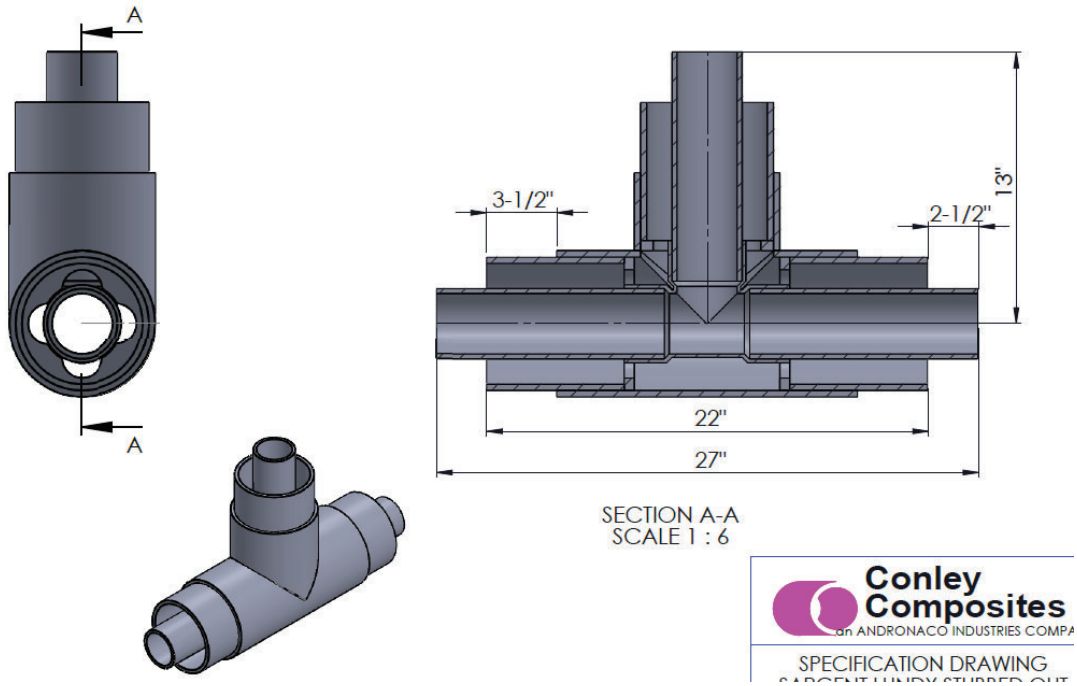

Figure 2-5. Conley Double-Containment Tee

The method of splicing in the tee will be as shown below with clam-shell type couplings (standard or custom adapters):

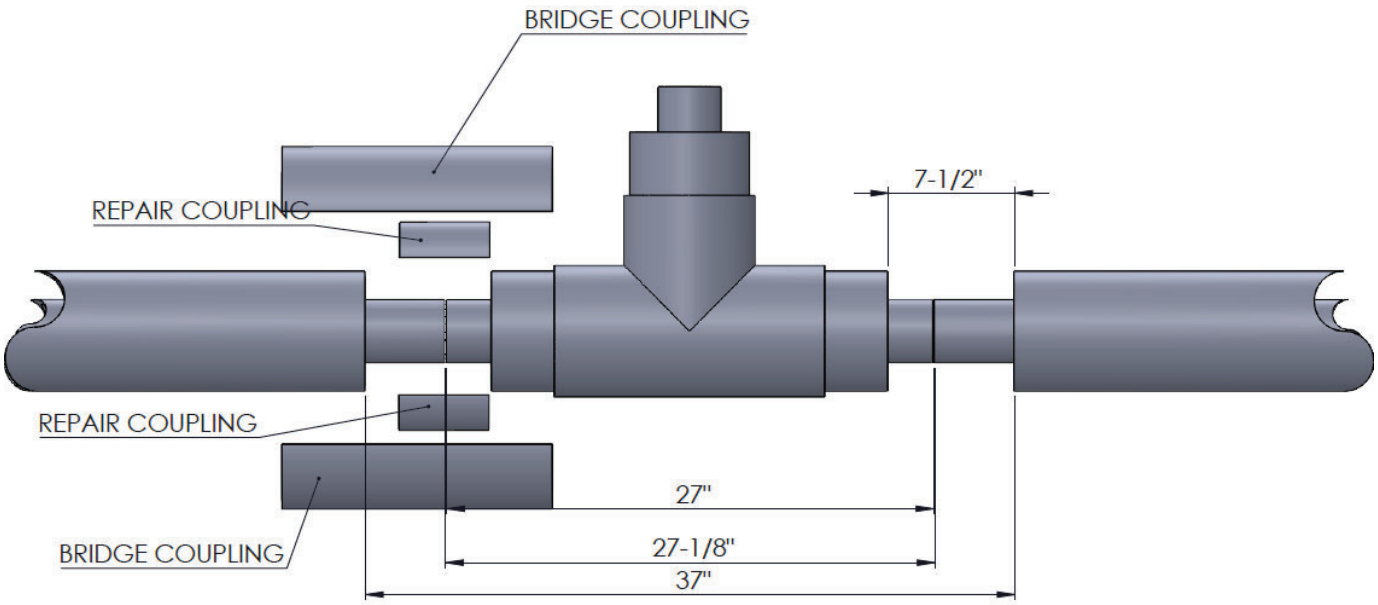

Figure 2-6. New Tee & Existing Pipe Splicing Configuration

2.5 Piping Loading Considerations for Analysis

Steps described in the WRPS engineering standard TFC-ENG-DESIGN-C-60 are used to identify the design conditions and load combinations imposed on the waste transfer piping. In the supplemental analysis, all relevant load combinations are reviewed. The highest demand-to-capacity ratios (DCRs) for code stresses from these load combinations are summarized at the end of the input and output AutoPIPE report presented in Appendix C.

2.5.1 Thermal Loading

Although thermal stress ranges are typically evaluated in the ASME B31.3 Code, allowable stresses for thermal loads are not provided in ISO 14692; the evaluation of thermal loading is left to the system designer. In ISO 14692, the primary and secondary piping is evaluated for the combined stress due to gravity, pressure, and thermal load effects. The thermal effects are added to the stress evaluation through the supplemental flexibility analysis due to temperature change of the pipe between the ambient (installation) temperature and the largest change in temperature (cold or hot). The three operating cases that are analyzed in AutoPIPE are described as follows:

1) Operating Case 1 (*Hot-in-Hot, Pressurized*): Both the primary and secondary pipes are pressurized. Buried piping and above-ground piping are all taken to be at the hot design temperature of 150° F. This thermal case uses a low ambient temperature of 60° F. (See *Design Inputs*.)

2) Operating Case 2 (*Cold-in-Cold, No Pressure*) The system is off, so neither the primary nor secondary pipes are pressurized, but they are both at the cold design temperatures of -25° F (for above ground, outermost pipes) and both are at 32° F (for buried pipe). This thermal case uses a high ambient temperature of 80° F. (See *Design Inputs*.)

3) Operating Case 3 (*Hot-in-Cold, Pressurized*): Both the primary and secondary pipes are pressurized, the secondary pipes are cold (-25° F for above ground pipe; 32° F for buried pipe), and the primary piping is hot (120° F for both above-ground and buried pipe). (See *Design Inputs*.) This type of operating case often produces the worst-case thermal displacements and support loading conditions. This operating case evaluates an expanding primary pipe within a contracting secondary pipe.

To be consistent with the ASME B31.3 Code and TFC-ENG-DESIGN-C-60, the support reactions are products of the operating cases above (see paragraph below with excerpt from B31.3).

> **319.3.1 Thermal Expansion Data**
> *(a)…*
> *(b) Values for Reactions.* Values of thermal displacements to be used in determining total displacement strains for computation of reactions on supports and connected equipment shall be determined as the algebraic difference between the value at maximum (or minimum) temperature for the thermal cycle under analysis and the value at the temperature expected during installation.

The thermal loading for displacement-based reactions is defined in two generalized cases: 1) a temperature range from 80° F to the cold (ambient) design condition, and 2) a temperature range from 60° F to the hot design temperature condition. Because the Conley FRP pipe has a thermal expansion coefficient (see Conley pipe data in Attachment 2) based on a difference in temperature (not various values over a range of temperatures), thermal expansion coefficients at the associated design temperatures were calculated in Section 8.0 using the appropriate high or low ambient temperature and manually input in the AutoPIPE supplemental analysis.

2.5.2 Seismic Loading

Using the acceleration values cited in TFC-ENG-STD-06 paragraph 3.5.5.2 and following the methodology in Chapter 13 of ASCE 7, seismic accelerations were calculated (see Design Inputs and Section 8.0 Calculations). The controlling load combination (reference ASCE 7 Section 2.4.1) is D + 0.7E, where D is the dead load demand and E is the seismic demand. As a general service system, the LERF piping will be analyzed to NDC-1 criteria per Design Input 12. NOTE: A static earthquake analysis is used to satisfy requirements for the seismic evaluation for NDC-1 piping. The FRP piping is evaluated based on the ISO 14692 Code. A separate structural analysis addresses the evaluation of the structural adequacy of the primary pipe supports (see the *Results* section).

2.5.3 Fluid Loads

2.5.3.1 Thrust Forces on Bends Due to Normal Operation and Occasional Loads

Thrust loads for normal operation and from pump start-ups could be applied at the midpoints of the elbows in the model. The normal operating loads could be applied in the two in-plane directions at the bends in

association with gravity loadings. However, given the sizes of the carrier pipes and the maximum expected flow rates, the resulting calculated thrust forces that could act at the 3-in. & 4-in. primary piping elbows were found to be very small (<10 lbf) and were therefore judged to be negligible and not included in the AutoPIPE supplemental analysis.

2.5.3.2 Transient (e.g., Water Hammer) Loads

Evaluation of occasional loads due to transient pressures is not required. The new piping and components being installed as part of this project's scope have a pressure capacity greater than or equal to that of the existing system. Therefore, the new piping is considered sufficient to handle all existing transient pressures from existing transient initiators. New transient initiators include the installation of LV-P41-4-1 located in Catch Basin 41. However, this valve has a 30 second closure time which significantly exceeds the communication time of the system and will introduce negligible transient pressures.

2.5.4 Wind Loads

The wind loading criteria is taken from Table 3 of TFC-ENG-STD-06 for a WDC-1 classification for general service systems. It employs an ultimate design wind speed of 110 mph and Exposure Category C.

CALCULATION SHEET

Project No. S54413.024	**Calculation No.** S54413.024-M-001	**Rev.** 0	**Page No.** 20 of 192
Title: LERF Basin 41 Buried Piping Analysis			
Prepared By: JD Williams	**Date:** 5/13/20	**Checked By:** JS Huisingh	**Date:** 5/13/20

3.0 DESIGN INPUTS

1. Dimensions and details for the new, FRP lines are per drawing H-2-838765. (See Appendix A.)
2. Code of Record: B31.3 2016 (RPP-SPEC-63632, Section 40 40 00, Part 1, Subsection 1.2)
3. Operating/Ambient Temperatures:
   - A. Above Ground Pipe:
     - i. Carrier:
       - a. Hot: 150° F (RPP-SPEC-63632, Section 40 40 00—Attachment 2 of that section) in ambient hot air. Considered to be 120 °F when operating in Load Case 3 at cold ambient temperatures.
       - b. Cold: -25° F (Minimum ambient temperature per TFC-STD-02, Section 3.1.1 for exposed piping.) Used for empty pipes in Load Case 2.
     - ii. Containment:
       - a. Hot: 150° F (RPP-SPEC-63632, Section 40 40 00—Attachment 2 of that section) in ambient hot air.
       - b. Cold: -25° F (Minimum ambient temperature per TFC-STD-02, Section 3.1.1 for exposed piping.)
   - B. Buried Pipe:
     - i. Carrier:
       - a. Hot: 120° F (RPP-SPEC-63632, Section 40 40 00—Attachment 2 of that section)
       - b. Cold: 32° F (Conservative cold temperature for buried pipe at a burial depth greater than 3 ft, which is below frost line. See Design Input 7.A. Also see TFC-ENG-STD-02 Table 2 and Table B-1 at 3ft.) Used for empty pipes in Load Case 2.
     - ii. Containment:
       - a. Hot: 100° F (Conservative, RPP-SPEC-63632, Section 40 40 00—Attachment 2 of that section, given that the pipe temperature will stay around that of the soil at the buried depth. Also see TFC-ENG-STD-02 Table 2 and Table B-1 at 3ft.)
       - b. Cold: 32° F (Conservative cold temperature for buried pipe at a burial depth greater than 3 ft, which is below frost line. See Design Input 7.A. Also see TFC-ENG-STD-02 Table 2 and Table B-1 at 3ft.)

C. The temperature of piping at the time of installation is unknown. Therefore, per TFC-ENG-DESIGN-C-60, Table 2(a), the ambient temperature is taken to be 60° F for the hot case and 80° F for the cold case.

4. Operating Pressures (RPP-SPEC-63632, Section 40 40 00—Attachment 2 of that section):

A. Carrier (Inner) Pipe: 150 psig

B. Containment (Outer) Pipe: 50 psig

5. New Piping Data[4]:

A. Material: Carrier and containment pipe are Conley double containment FRP pipe utilizing Conley Aromatic® amine cured epoxy resin. FRP pipe construction is filament wound fiberglass-reinforced thermosetting epoxy resin pressure pipe manufactured per ASTM D2996—Type 1, Grade 1, Class F (RTRP-11FW). (RPP-SPEC-63632, Section 40 40 00—Attachment 2 of that section.)

B. Pipe Properties (Attachment 2; see also Section 8.0 Calculations):

i. Thermal Expansion Coefficient: $\alpha = 9.5*10^{-6}$ in/in/° F

ii. Poisson's ratio: Stress in the hoop direction, $\nu_{ha} = 0.23$

iii. Axial Modulus of Elasticity: $1.75*10^6$ psi (at 75° F) & $1.30*10^6$ psi (at 250° F)

iv. Hydrostatic Design Basis (HDB): 16,000 psi (at 75° F) and 8,000 psi (at 250° F)

6. Existing Piping Data:
(Note: HNF-27957 documents the pipe classes for the 200 Area ETF, Load-In, and LERF systems.)

A. 3"/6" Pipe: Fibercast® Centricast III EP[5] centrifugally cast epoxy resin fiberglass pipe manufactured in accordance with ASTM D2997 classification of RTRP, Type II, Grade 1, Class C. (See Attachment 3.)

B. 4"/8" Pipe: Bondstrand Series 4000 filament-wound epoxy resin fiberglass pipe manufactured in accordance with ASTM D2996 classifications of RTRP-11FE-1112 & -1113. (See Attachment 3.)

---

[4] New connected, above-ground, stainless steel piping at the catch basin (LERF Basin 41) has been modeled and analyzed separately in RPP-CALC-63779. The model analyzed in that calculation is used in the current analysis only to more accurately simulate the boundary conditions at the connections between the new FRP piping and the new stainless steel piping at the catch basin at LERF Basin 41. The stainless steel piping is not being evaluated or reported on in this calculation. Design inputs, including pipe properties and operating conditions from RPP-CALC-63779 are utilized for the stainless steel piping in this analysis.

[5] HNF-27957 calls out Centricast RB-1520 piping in their Class M-17 (System 60M) pipe description, but references W-105-C3, Rev. 1 M-17 piping specification which calls out Centricast III EP piping which has reinforcement thickness that is approximately half that of the RB-1520 piping. Old specifications do not indicate which Centricast series was ultimately used. However, we know that the Conley product strength in the new design is equal to or weaker than that of the existing pipe such that if the new piping stresses are acceptable, so will be the stresses for the existing piping.

CALCULATION SHEET

Project No. S54413.024	**Calculation No.** S54413.024-M-001	**Rev.** 0	**Page No.** 22 of 192
Title: LERF Basin 41 Buried Piping Analysis			
Prepared By: JD Williams	**Date:** 5/13/20	**Checked By:** JS Huisingh	**Date:** 5/13/20

7. Buried Pipe Data (See Section 8.0 Calculations):
   - A. Average depth (H) of pipe centerline (see screenshots in Mathcad file)
     - i. 3"/6" Pipes = 8ft + 9.94in
     - ii. 4"/8" Upper Pipes = 3ft + 9.13in
     - iii. 4"/8" Lower Pipes = 8ft + 9.94in
   - B. Coating factor for fusion bonded epoxy = 0.6 (ASCE 2001, Table B.1)
   - C. Soil Data (See Section 2.0 Methodology):
     - i. Crushed rock (pipe bedding and initial backfill material) – (RPP-SPEC-63632, Section 31 23 33, Subsection 2.1.E.3)
       - a. Class I soil class (Attachment 2 & Attachment 4)
       - b. Density: 110 lbf/ft^3 (See Section 2.0 Methodology)
       - c. Internal friction angle: $\Phi = 40°$ (Attachment 1)
       - d. Cohesion value: c = 0 (Attachment 1)
     - ii. Site Soil (final backfill only)
       - a. Density: 110 lbf/ft^3 (TFC-ENG-STD-06)
       - b. Internal friction angle: $\Phi = 40°$ (Attachment 1)

8. Conley FRP Pipe Geometry (See Section 8.0 & Attachment 2):

Nom. Pipe Diameter	Pipe Series	Pipe O.D.	(Outer) UV Thickness	Pipe Reinf. Thickness	Reinf. O.D.*	Reinf. I.D.**	Fitting Reinf. Thickness***
3"	40	3.47"	0.040"	0.135"	3.39"	3.12"	0.295"
4"	40	4.48"	0.020"	0.160"	4.44"	4.12"	0.295"
6"	30	6.38"	0.020"	0.110"	6.34"	6.12"	0.410"
8"	30	8.38"	0.020"	0.110"	8.34"	8.12"	0.410"

* Reinf. O.D. = Pipe O.D. – 2 (UV Thickness)
** Reinf. I.D. = Reinf. O.D. – 2 (Reinf. Thickness)
*** See Attachment 2.

9. Corrosion-erosion allowance for FRP pipe is neglected since the pipe has a corrosion barrier (inner liner) which has a thickness of 0.060". (See Attachment 2.)

10. Specific gravity of contents is 1.0, but conservatively modeled using a value of 1.5. (See Attachment 5.)

11. The pipe insulation (for above-ground containment and exposed carrier pipes) was originally specified in RPP-SPEC-63632, Section 40 42 13 to be 2" thick black rubber "Armaflex" type pipe insulation, which has a maximum density of 6 lbf/ft^3. The current supplemental AutoPIPE analysis uses this density. However, per client direction, the specification for this insulation has since changed to be 2" of Owens Corning FoamGlas insulation, which has a maximum density of 7.5 lbf/ft^3 (see Attachment 6). Considering the weights of the double contained piping, the contents, and the insulation, the new, heavier insulation increases the weight per foot of contents filled double contained piping by less than 5%. Given that all DCRs for new insulated FRP piping do not exceed 0.80 (see Section 6.1), it is apparent that this additional weight does not threaten the results of this analysis nor justify rerunning the supplemental analysis with this slight difference in insulation density. Therefore, no rerun of the supplemental analysis is necessary.

12. The effluent lines are classified as general service lines and as such TFC-ENG-STD-06 requires the system to be designed to NPH (Natural Phenomena Hazard) Design Category (NDC)-1. (See design category comparisons in Table 1 of TFC-ENG-STD-06.) TFC-ENG-STD-06 invokes the International Building Code [IBC] which also invokes ASCE 7 in which Ip=1.0 such that equivalent static seismic values of Ah = 0.123g and Av = 0.082g are calculated (see Section 8.0 Calculations) and applied in the supplemental analysis. Also reference TFC-ENG-STD-06 Section 3.5.5.1, 3.5.5.2, and Table 6.

13. The service design factor used in the wall thickness calculation is taken as 0.2. Section A302.3.2(c)(2) states that when using the static HDB[S], the service design factor *F* shall not exceed 0.5. The service design factor is selected based on different conditions, including but not limited to installation, environment, temperature, hazard involved, life expectancy desired, and the properties of the pipe selected. The buried piping evaluated herein is general service, carrying water (very minor contamination levels), with no water hammer loadings expected. Also, the entire system is dual contained. In general, there is very low risk involved with this piping. Therefore, the factor of 0.2 is judged to be a conservatively low service design factor.

4.0 ASSUMPTIONS

There are no unverified assumptions in this calculation. Engineering judgments are used and justified in the body of the calculation.

5.0 COMPUTER SOFTWARE

The pipe stress analysis modeling software, Bentley AutoPIPE CONNECT Edition generation, Version 11.01.00.24 was used to model the piping assembly and perform the supplemental stress analysis per the ISO 14692 GRP Piping Code. The program was executed on a Dell computer; model Dell Precision™[6] Tower 3620, Service Tag Number JMKFRD2, with an S&L ID of GDV11145. This software has been validated as documented in ARES ESD V&V No. VV-19-10-042, Rev. 0.

Mathcad®[7] 15.0 (M045) was used for the hand calculations. Calculations are checked step by step.

6.0 RESULTS

6.1 ASME B31.3 Evaluation Results

As stated in the Methodology section, the minimum wall thickness check for internal pressure per ASME B31.3, Section A304.1.2(c) is performed in Section 8.5 where it is shown that the Series 40 and 30 pipe (i.e,. for inner and outer FRP pipes, respectively), is all adequate for the internal pressures expected in the system and meet the Code requirement for minimum required wall thickness. Also, as shown in manufacturer-provided, AWWA M45-based buried piping (external load) calculations in Attachment 7, the outer FRP pipes (6-inch and 8-inch) are structurally adequate to handle the external (burial) loads and thereby meet the external loading requirement in Section A302.3.3(c)(2) of the Code.

6.2 Overall Supplemental Analysis Results

The maximum stress DCR among all associated buried transfer piping is 0.80 at Point X40 (4-in. primary elbow) for the combined stress due to gravity, pressure, and thermal loadings. (See stress isometric below.) It is also noted for reference that among the existing regions of piping that were modeled for the sake of determining representative stresses on newly-connected piping, the maximum stress DCR is 0.83 at Point W58 (8-in. pipe near tee) for the occasional stress due to seismic loads. Given that all stress DCRs associated with this supplemental analysis are less than 1.0, the subject piping is found to perform acceptably under anticipated loadings per ISO 14692 requirements and Hanford standards cited previously.

[6] Dell Precision is a registered trademark of Dell Computer Corporation, One Dell Way, Round Rock, TX 78682.
[7] Mathcad is a registered trademark of Parametric Technology Corporation., Needham, Massachusetts.

Sargent & Lundy Engineering Services, Inc.

CALCULATION SHEET

Project No. S54413.024	**Calculation No.** S54413.024-M-001	**Rev.** 0	**Page No.** 25 of 192
Title: LERF Basin 41 Buried Piping Analysis			
Prepared By: JD Williams	**Date:** 5/13/20	**Checked By:** JS Huisingh	**Date:** 5/13/20

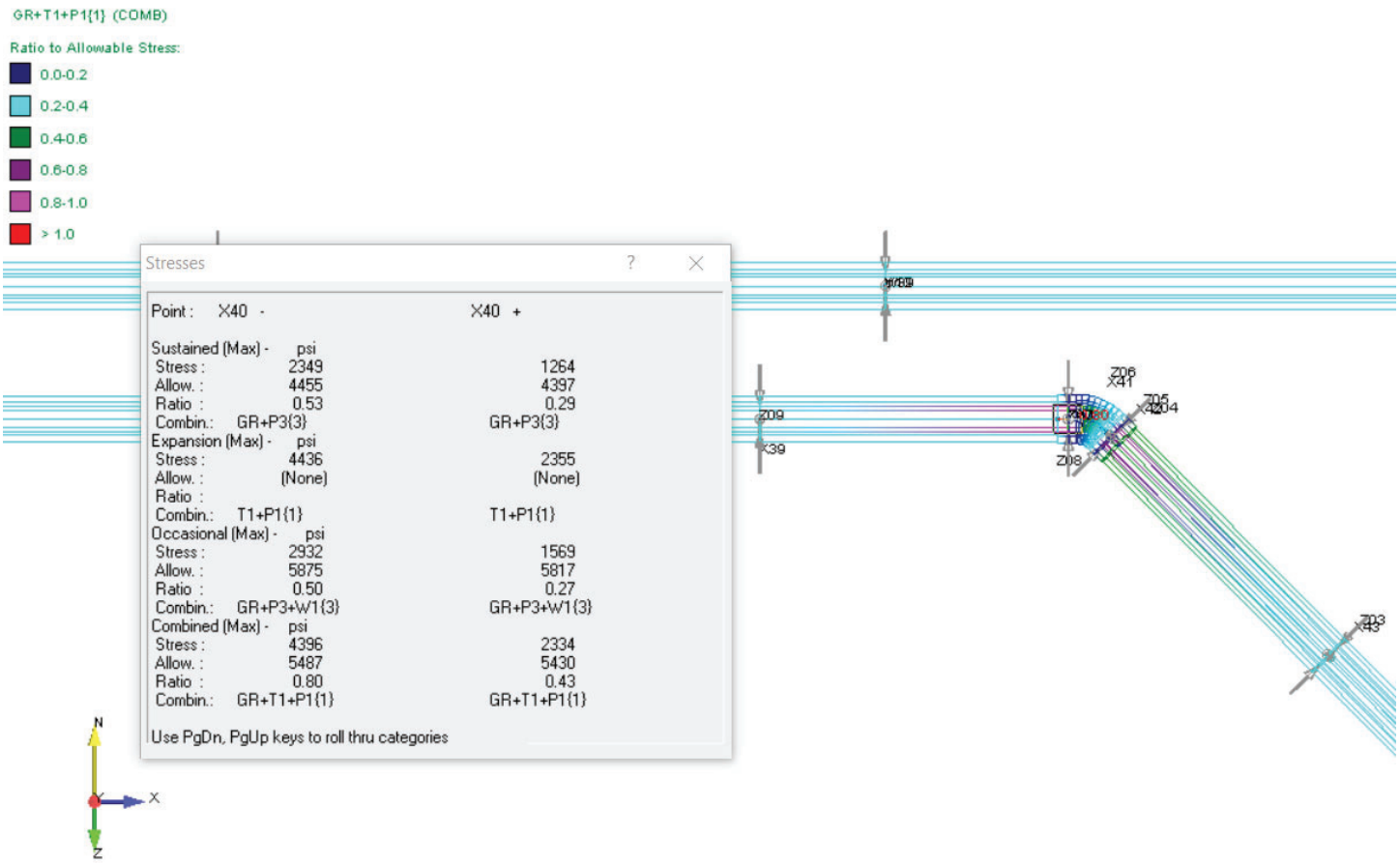

Figure 6-1. Maximum Pipe Stress in New FRP Pipe

The anchor and support loadings from the supplemental analysis are summarized in Section 6.3 below.

6.3 Piping Support Loads

Designs of associated supports and anchors are presented in design drawing H-2-838765. Primary piping supports (i.e., guides, vertical supports) for both primary and secondary piping are structurally evaluated in RPP-CALC-63779, Appendix H. No evaluation of existing supports for existing piping that is tied into and affected by the new FRP piping analyzed herein is necessary as the supports are judged to be adequate by comparison to the loading of the new piping and the types of supports used for the new piping. As shown in Table 6-1 and Table 6-2, the maximum moment on the new support bases bounds the maximum moment on the support bases for the existing pipe supports. Also, the support types used on the existing piping are judged to be structurally adequate for the relatively low forces reported in the AutoPIPE analysis and in the tables below.

CALCULATION SHEET

Project No. S54413.024	**Calculation No.** S54413.024-M-001	**Rev.** 0	**Page No.** 26 of 192
Title: LERF Basin 41 Buried Piping Analysis			
Prepared By: JD Williams	**Date:** 5/13/20	**Checked By:** JS Huisingh	**Date:** 5/13/20

Table 6-1. Bounding Support Reaction Loads on New Pipe Supports.

Support Node Point	Support Type*	Support Location	Vertical Load** (lbf)	Lateral Load (Transverse to Pipe Axis) (lbf)	Maximum Moment at Support Base (lbf*ft)
Z52	HSS Guide	ON Catch Basin 42	204	429	2282
Y45	HSS Guide	OFF Catch Basin 41	567	264	858
Y54	HSS Guide	ON Catch Basin 41	296	381	697

* See drawing H-2-838765.
** Actual vertical load concurrent with maximum lateral load.

Table 6-2. Bounding Support Reaction Loads on Existing Pipe Supports.

Support Node Point	Support Type*	Support Location	Vertical Load** (lbf)	Lateral Load (Transverse to Pipe Axis) (lbf)	Maximum Moment at Support Base (lbf*ft)
W65	HSS Guide	ON Catch Basin 42	490	1109	2063
AC02	HSS Guide	OFF Catch Basin 42	1258	455	1201

* See drawings H-2-79633 and H-2-79634.
** Actual vertical load concurrent with maximum lateral load.

7.0 REFERENCES

AISC 14th Edition, *Steel Construction Manual*, American Institute of Steel Construction, Inc., 2011, Chicago, IL.

ARES ESD, a division of Sargent & Lundy Engineering Services, Inc. V&V No. VV-19-10-042, Rev. 0, *Bentley AutoPIPE CONNECT Edition*, Version 11.01.00.24 (available upon request).

ASCE 2001; Guidelines for the Design of Buried Steel Pipe; 2001; American Lifelines Alliance, contracted under a cooperative agreement between the American Society of Civil Engineers and the Federal Emergency Management Agency, Reston, VA.

ASCE 7-10, *Minimum Design Loads for Buildings and Other Structures*, American Society of Civil Engineers, Reston, VA.

ASME B31.3-2016, *Process Piping*, American Society of Mechanical Engineers, New York, NY.

ASTM D2992-18, Standard Practice for Obtaining Hydrostatic or Pressure Design Basis for “Fiberglass” (Glass-Fiber-Reinforced Thermosetting Resin) Pipe and Fittings, ASTM International, West Conshohocken, PA.

ASTM D2996-17, Standard Specification for Filament-Wound “Fiberglass” (Glass-Fiber-Reinforced Thermosetting Resin) Pipe, ASTM International, West Conshohocken, PA.

ASTM D2997-15, Standard Specification for Centrifugally Cast “Fiberglass” (Glass-Fiber-Reinforced Thermosetting Resin) Pipe, ASTM International, West Conshohocken, PA.

AWWA M45, Third Edition, *Fiberglass Pipe Design*, American Water Works Association, Denver, CO, 2014.

Das, B.M., *Principles of Foundation Engineering*, Sixth Edition, Cengage Learning, Stamford, CT, 2007.

HNF-27957, Rev. 3, *200 Area ETF, Load-In, and LERF Pipe Class Specification*, U.S. Department of Energy, Richland, WA.

H-2-79633, Rev. 2, W-105 LERF 242-A EVAP CON INTERIM RETNN BASIN*, Pipe Supports*, U.S. Department of Energy, Richland, WA.

H-2-79634, Rev. 3, W-105 LERF 242-A EVAP CON INTERIM RETNN BASIN*, Pipe Supports*, U.S. Department of Energy, Richland, WA.

H-2-838765, Rev. 0, *LERF Basin 41, Mechanical, General Arrangement, Sections and Details, Etc.*, U.S. Department of Energy, Richland, WA.

ISO 14692:2002, Parts 1-4, *Petroleum and Natural Gas Industries — Glass-reinforced Plastics (GRP) Piping*, International Organization for Standardization.

Lindeburg, Michael R., *Civil Engineering Reference Manual*, 11th Edition, Professional Publications, Inc., Belmont, CA, 2008.

RPP-CALC-63650, Rev. 0, *242AL-41 Leachate and Basin Pump flow Calculation*, U.S. Department of Energy, Richland, WA.

RPP-CALC-63779, Rev. 0, *ASME B31.3 Evaluation of the LERF Basin 41 Stainless Steel Piping*, U.S. Department of Energy, Richland, WA.

RPP-SPEC-63632, Rev. 0, *LERF Basin 41 Design Construction Specification*, U.S. Department of Energy, Richland, WA.

TFC-ENG-DESIGN-C-60, Rev. A-3, Preparation of Piping Analyses for Waste Transfer Systems, U.S. Department of Energy, Richland, WA.

TFC-ENG-STD-02, Rev. B-0, *Environmental/Seasonal Requirements for TOC Systems, Structures, and Components*, U.S. Department of Energy, Richland, WA.

TFC-ENG-STD-06, Rev. D-2, *Design Loads for Tank Farm Facilities*, U.S. Department of Energy, Richland, WA.

Sargent & Lundy Engineering Services, Inc.

CALCULATION SHEET

Project No. S54413.024	**Calculation No.** S54413.024-M-001	**Rev.** 0	**Page No.** 29 of 192
Title: LERF Basin 41 Buried Piping Analysis			
Prepared By: JD Williams	**Date:** 5/13/20	**Checked By:** JS Huisingh	**Date:** 5/13/20

8.0 CALCULATIONS

CALCULATION SHEET

Project No. S54413.024	**Calculation No.** S54413.024-M-001	**Rev.** 0	**Page No.** 40 of 192
Title: LERF Basin 41 Buried Piping Analysis			
Prepared By: JD Williams	**Date:** 5/13/20	**Checked By:** JS Huisingh	**Date:** 5/13/20

APPENDIX A

LERF PIPING DRAWINGS

Sargent & Lundy Engineering Services, Inc.

CALCULATION SHEET

Project No. S54413.024	**Calculation No.** S54413.024-M-001	**Rev.** 0	**Page No.** 41 of 192
Title: LERF Basin 41 Buried Piping Analysis			
Prepared By: JD Williams	**Date:** 5/13/20	**Checked By:** JS Huisingh	**Date:** 5/13/20

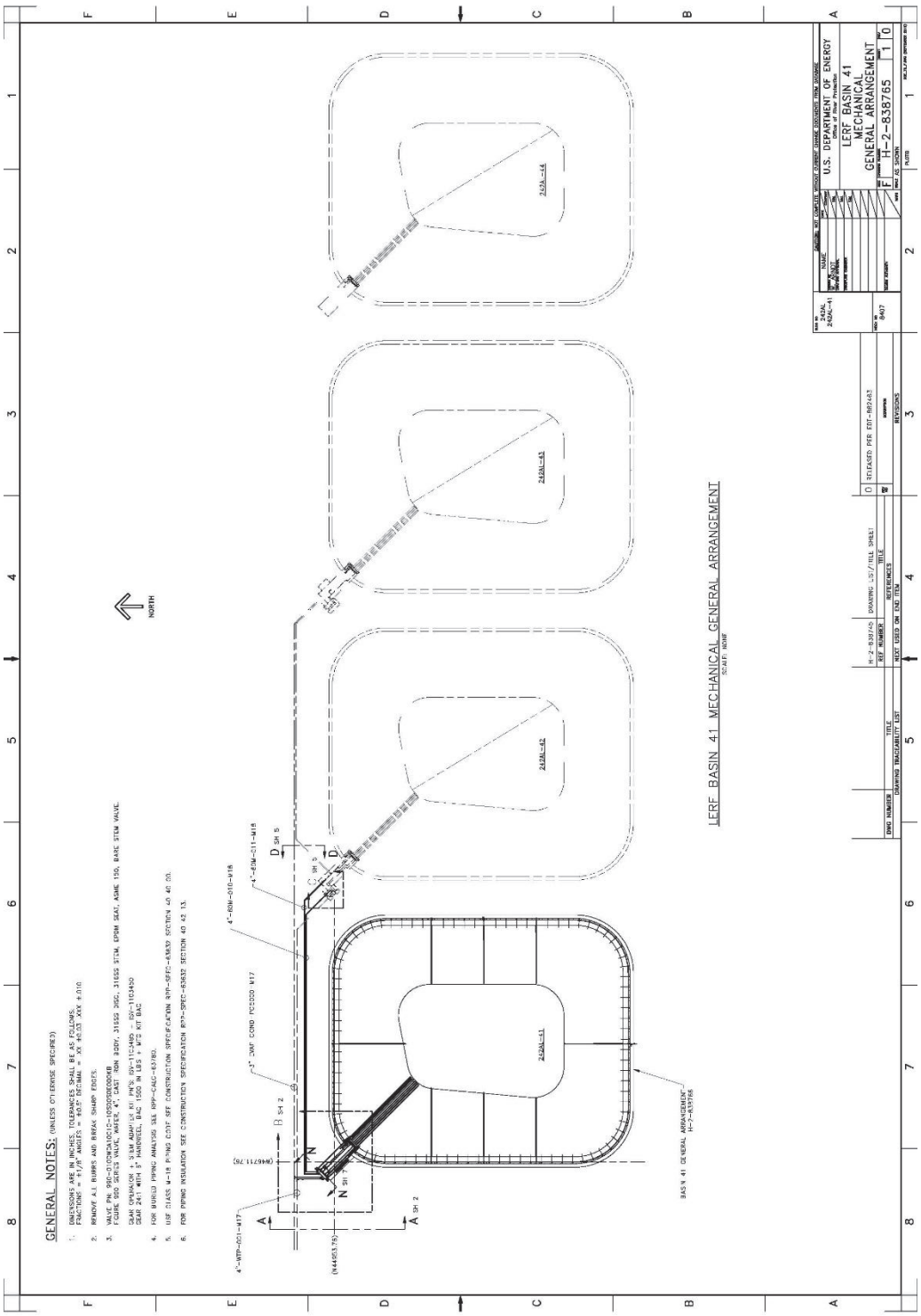

Sargent & Lundy Engineering Services, Inc.

CALCULATION SHEET

Project No. S54413.024	**Calculation No.** S54413.024-M-001	**Rev.** 0	**Page No.** 42 of 192
Title: LERF Basin 41 Buried Piping Analysis			
Prepared By: JD Williams	**Date:** 5/13/20	**Checked By:** JS Huisingh	**Date:** 5/13/20

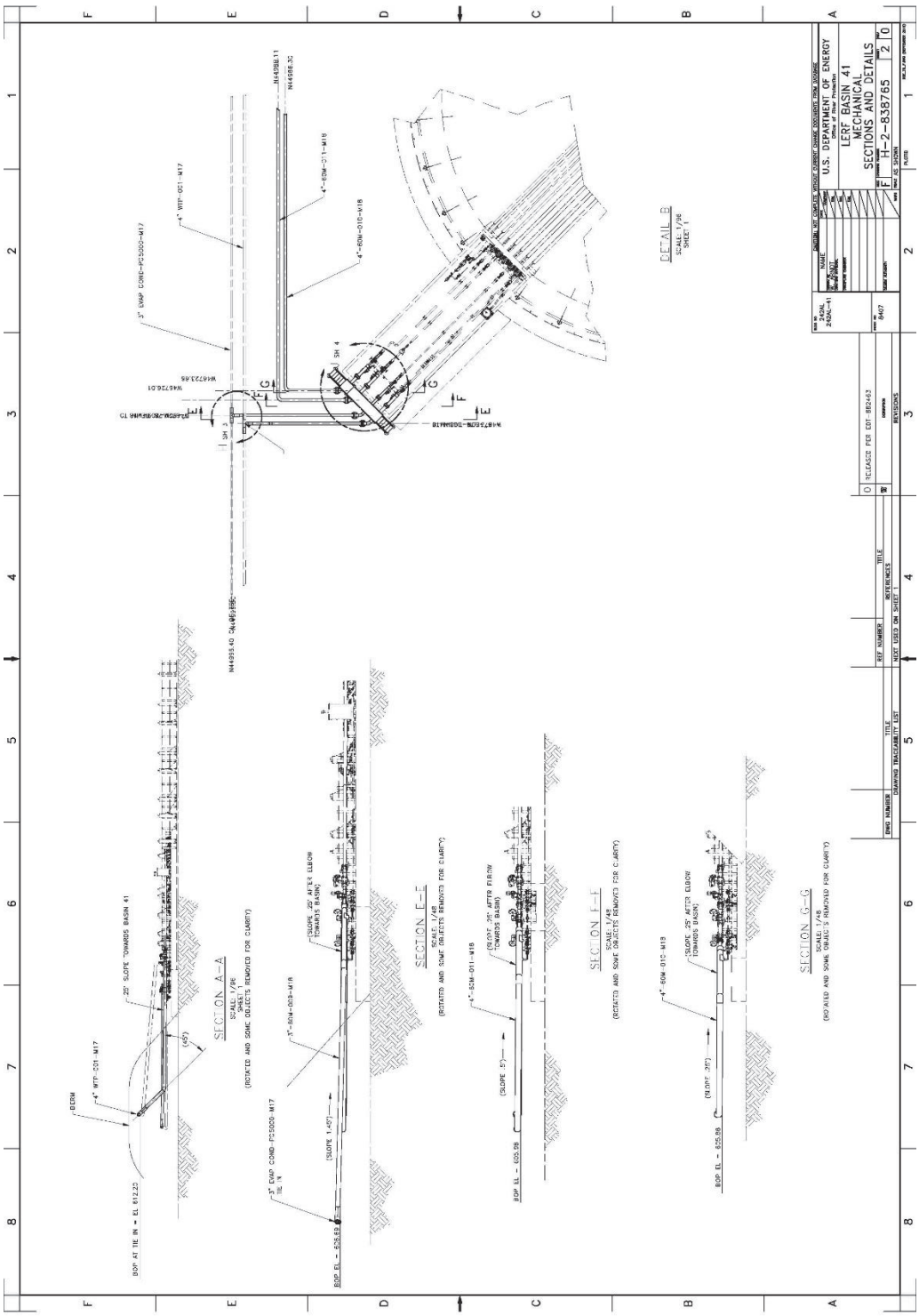

CALCULATION SHEET

Project No. S54413.024	**Calculation No.** S54413.024-M-001	**Rev.** 0	**Page No.** 43 of 192
Title: LERF Basin 41 Buried Piping Analysis			
Prepared By: JD Williams	**Date:** 5/13/20	**Checked By:** JS Huisingh	**Date:** 5/13/20

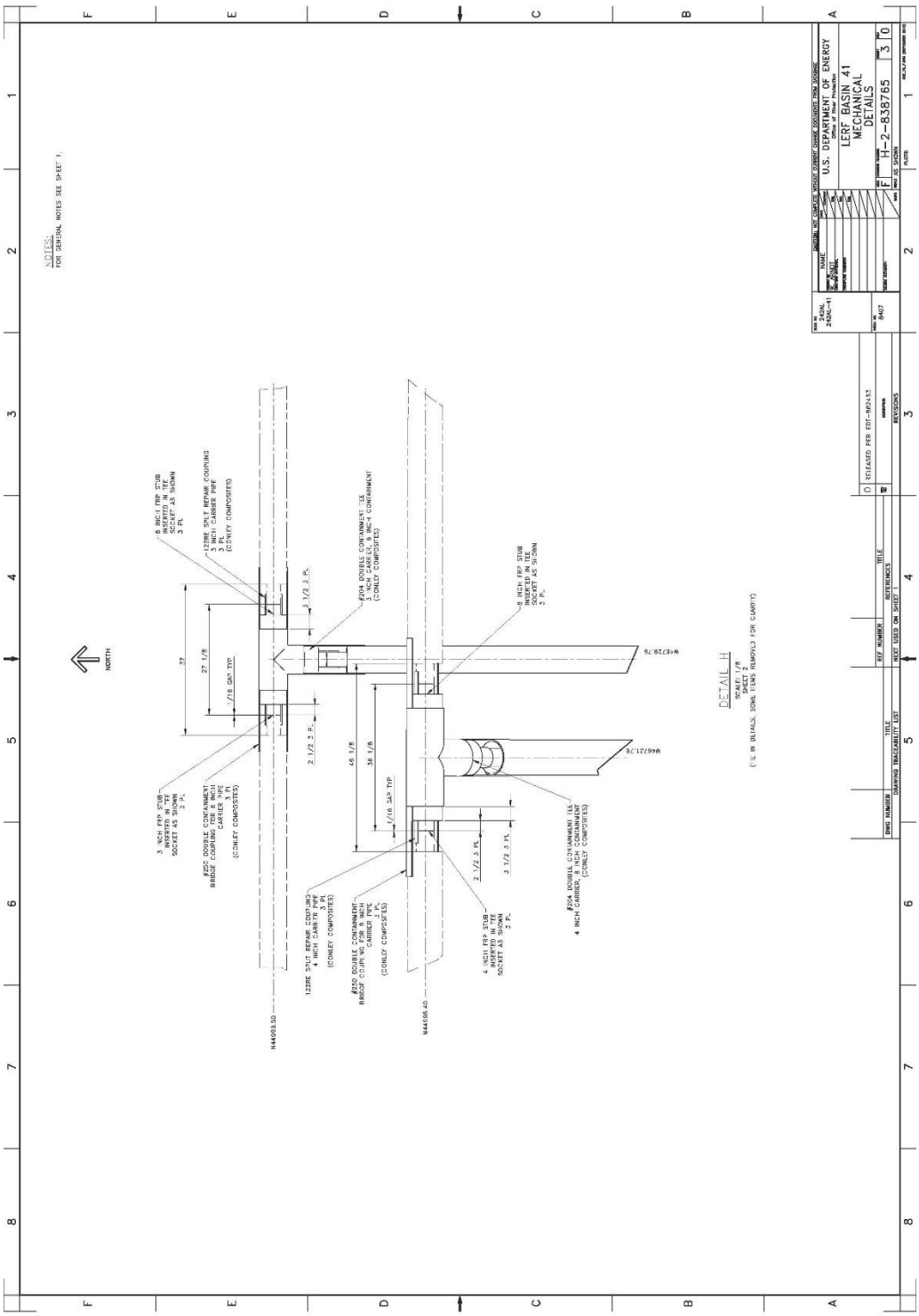

CALCULATION SHEET

Project No. S54413.024	**Calculation No.** S54413.024-M-001	**Rev.** 0	**Page No.** 44 of 192
Title: LERF Basin 41 Buried Piping Analysis			
Prepared By: JD Williams	**Date:** 5/13/20	**Checked By:** JS Huisingh	**Date:** 5/13/20

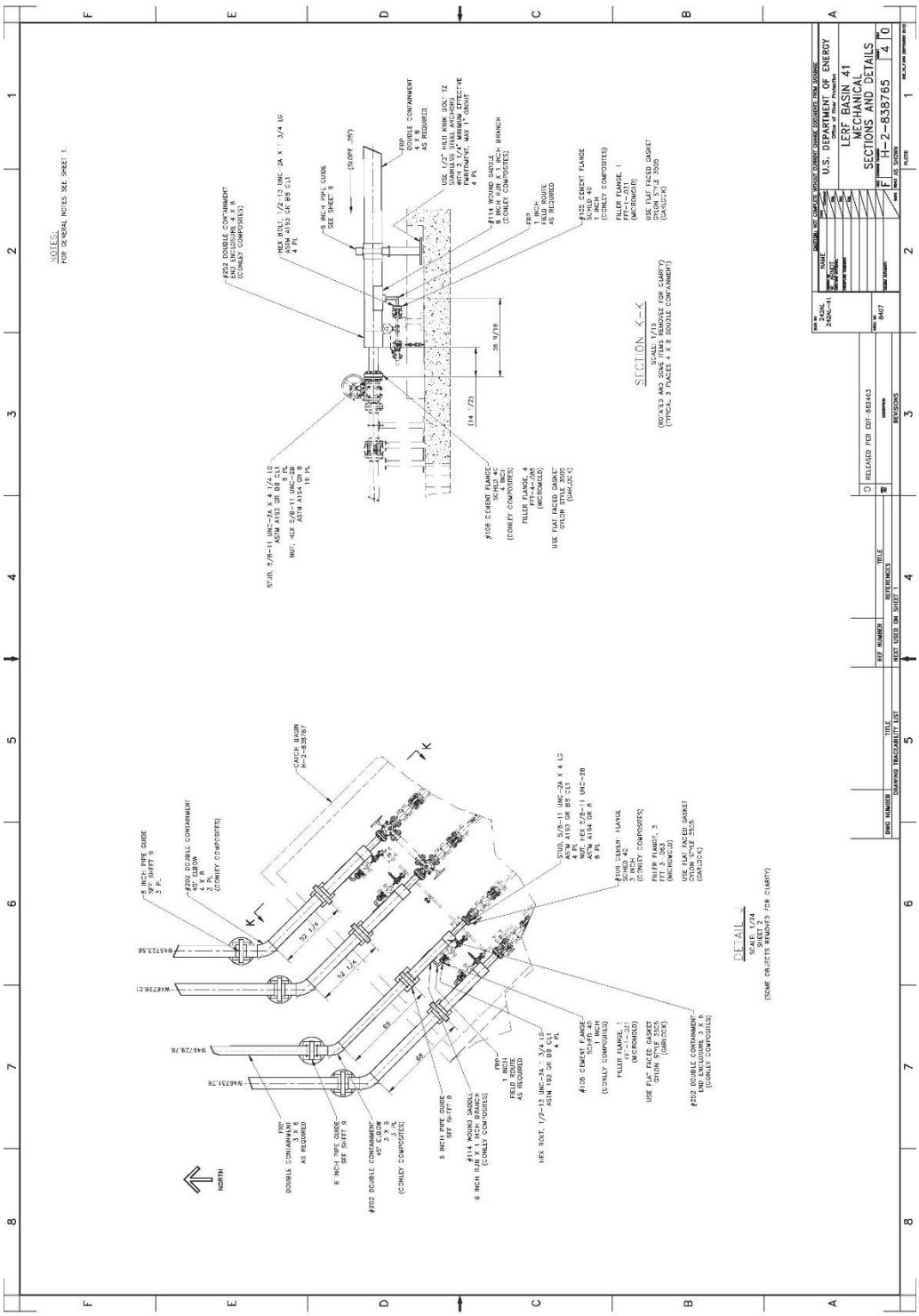

CALCULATION SHEET

Project No. S54413.024	**Calculation No.** S54413.024-M-001	**Rev.** 0	**Page No.** 45 of 192
Title: LERF Basin 41 Buried Piping Analysis			
Prepared By: JD Williams	**Date:** 5/13/20	**Checked By:** JS Huisingh	**Date:** 5/13/20

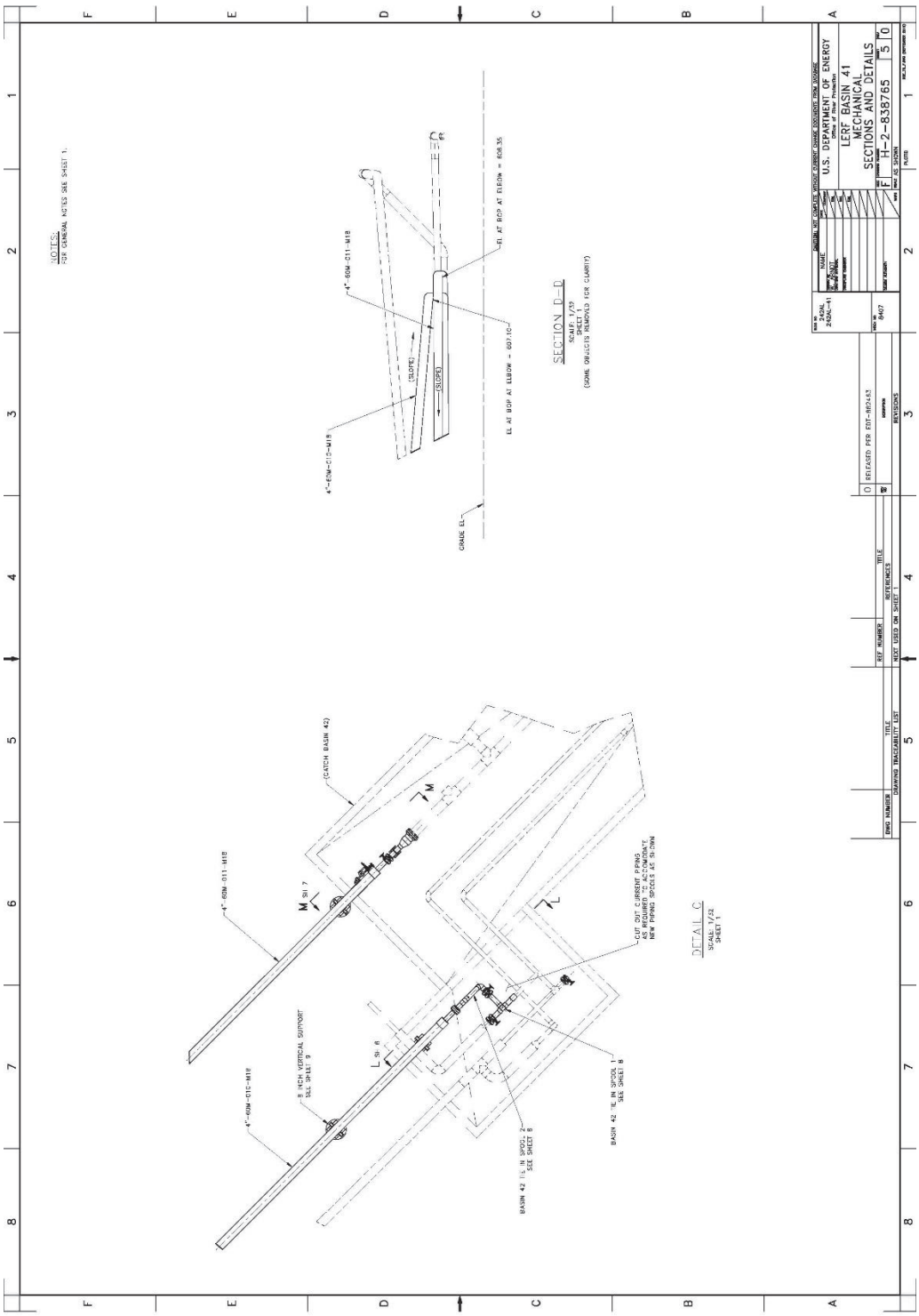

Sargent & Lundy Engineering Services, Inc.

CALCULATION SHEET

Project No. S54413.024	**Calculation No.** S54413.024-M-001	**Rev.** 0	**Page No.** 46 of 192
Title: LERF Basin 41 Buried Piping Analysis			
Prepared By: JD Williams	**Date:** 5/13/20	**Checked By:** JS Huisingh	**Date:** 5/13/20

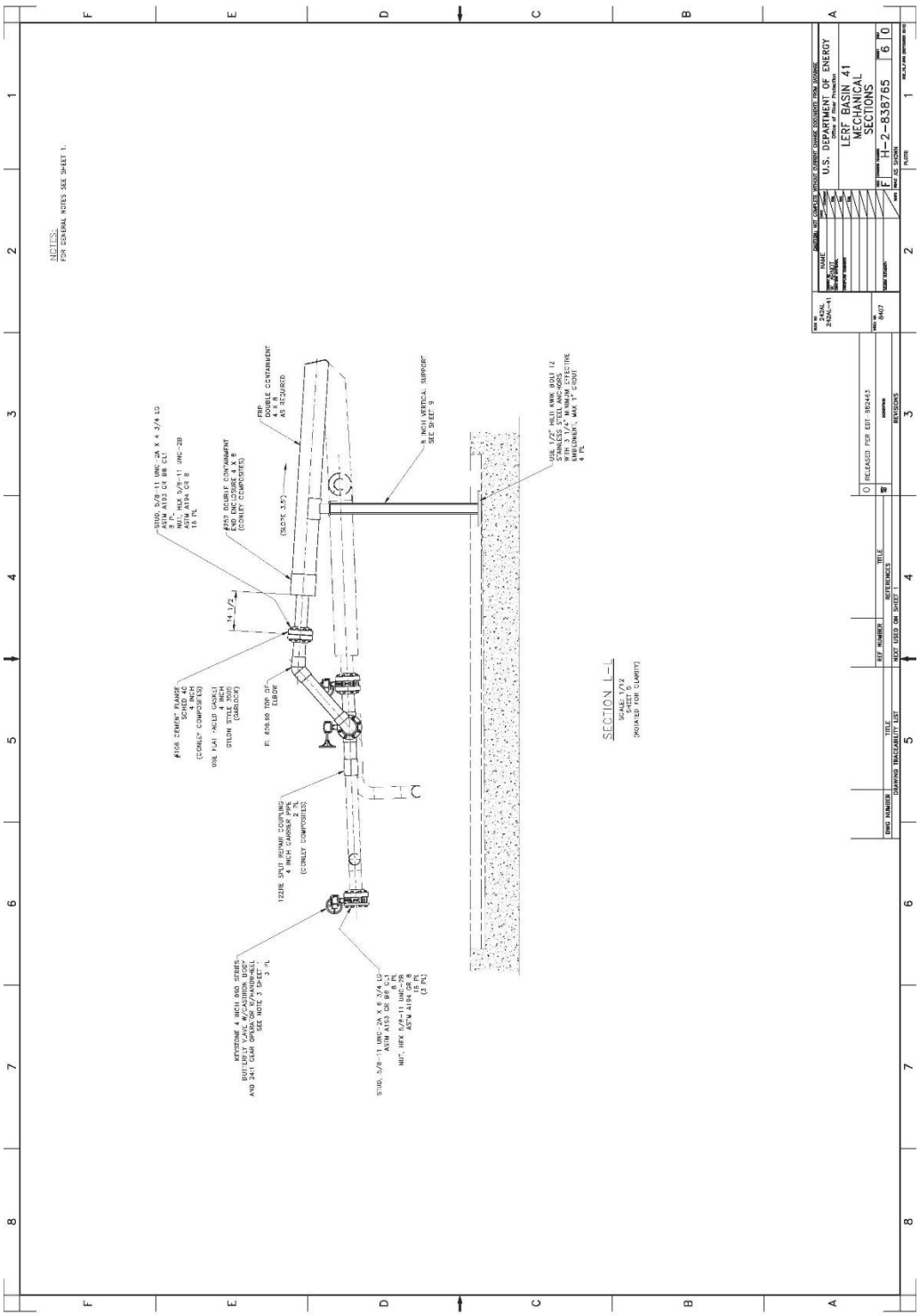

Sargent & Lundy Engineering Services, Inc.

CALCULATION SHEET

Project No. S54413.024	**Calculation No.** S54413.024-M-001	**Rev.** 0	**Page No.** 47 of 192
Title: LERF Basin 41 Buried Piping Analysis			
Prepared By: JD Williams	**Date:** 5/13/20	**Checked By:** JS Huisingh	**Date:** 5/13/20

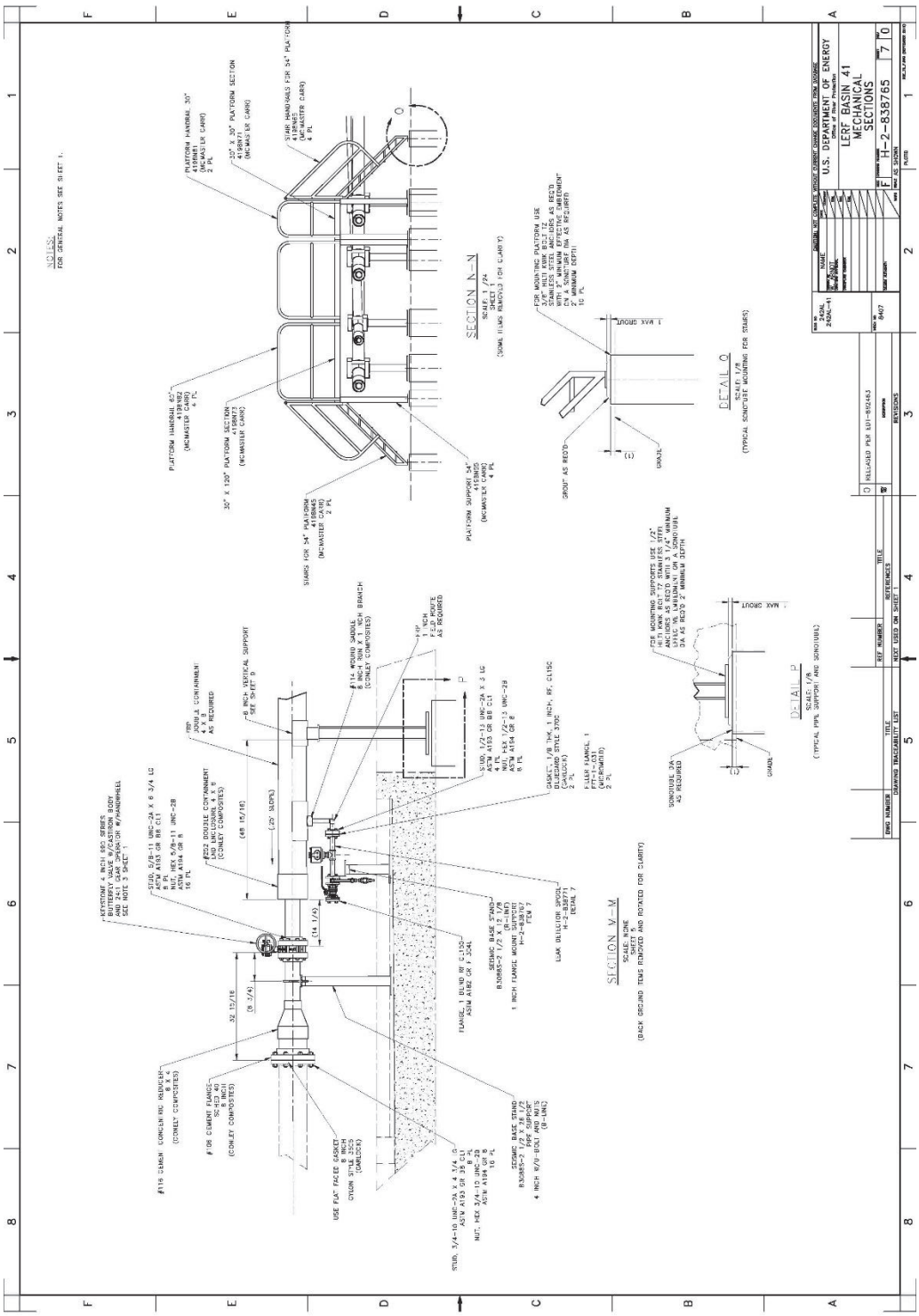

CALCULATION SHEET

Project No. S54413.024	**Calculation No.** S54413.024-M-001	**Rev.** 0	**Page No.** 48 of 192
Title: LERF Basin 41 Buried Piping Analysis			
Prepared By: JD Williams	**Date:** 5/13/20	**Checked By:** JS Huisingh	**Date:** 5/13/20

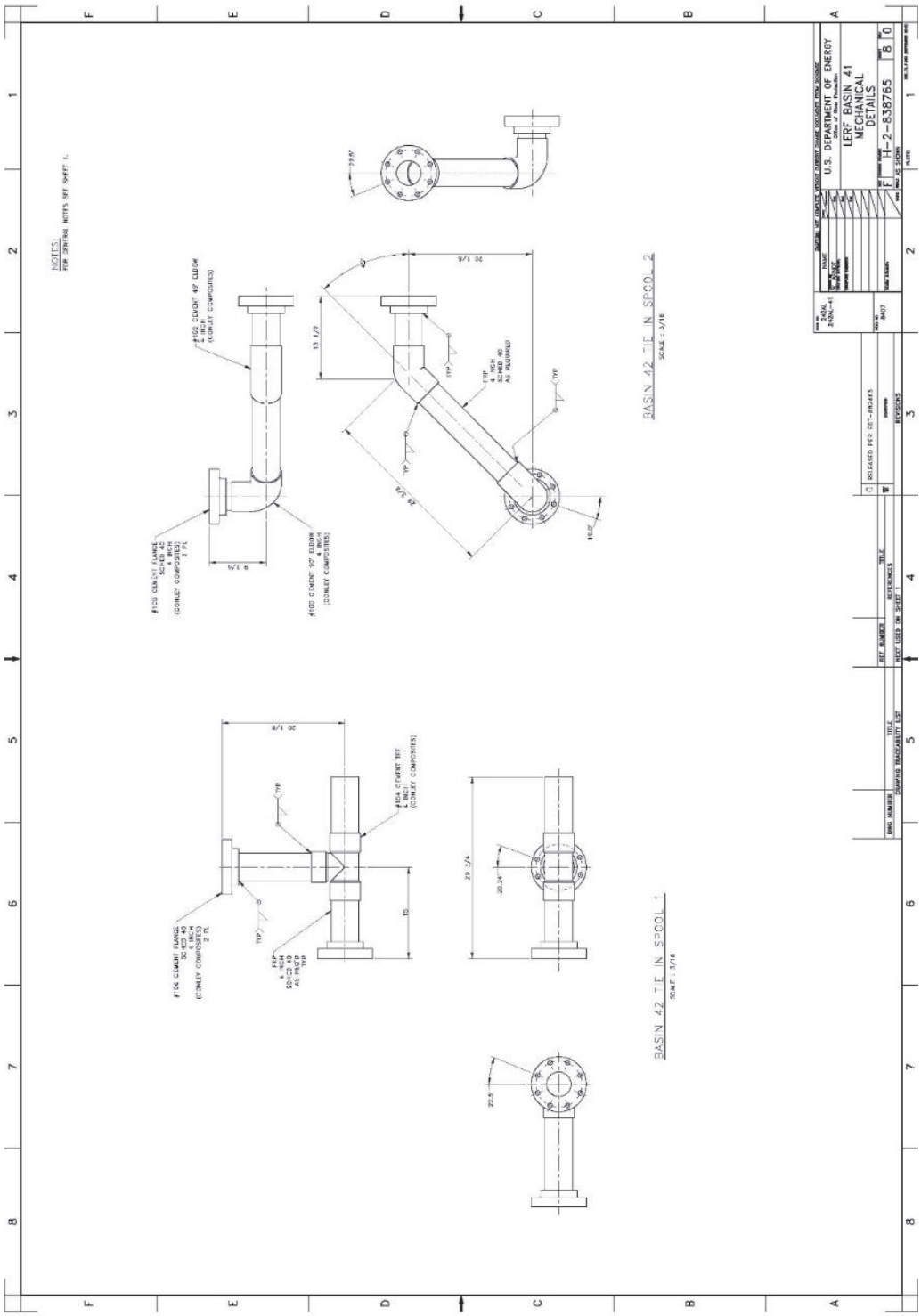

RPP-CALC-63780, Rev. 0

Sargent & Lundy Engineering Services, Inc.

CALCULATION SHEET

Project No. S54413.024	**Calculation No.** S54413.024-M-001	**Rev.** 0	**Page No.** 49 of 192
Title: LERF Basin 41 Buried Piping Analysis			
Prepared By: JD Williams	**Date:** 5/13/20	**Checked By:** JS Huisingh	**Date:** 5/13/20

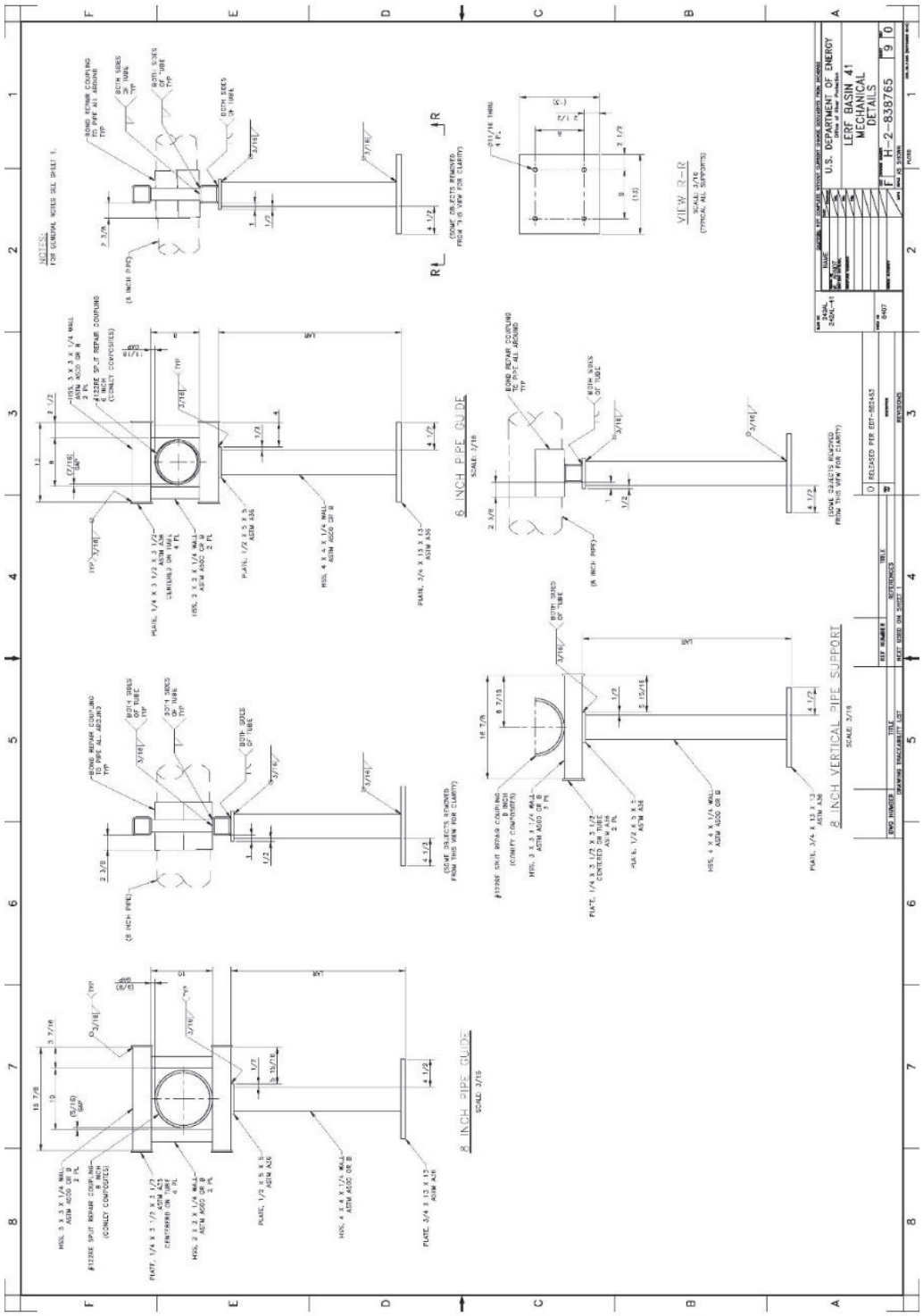

RPP-CALC-63780, Rev. 0

Sargent & Lundy Engineering Services, Inc.

CALCULATION SHEET

Project No. S54413.024	**Calculation No.** S54413.024-M-001	**Rev.** 0	**Page No.** 50 of 192
Title: LERF Basin 41 Buried Piping Analysis			
Prepared By: JD Williams	**Date:** 5/13/20	**Checked By:** JS Huisingh	**Date:** 5/13/20

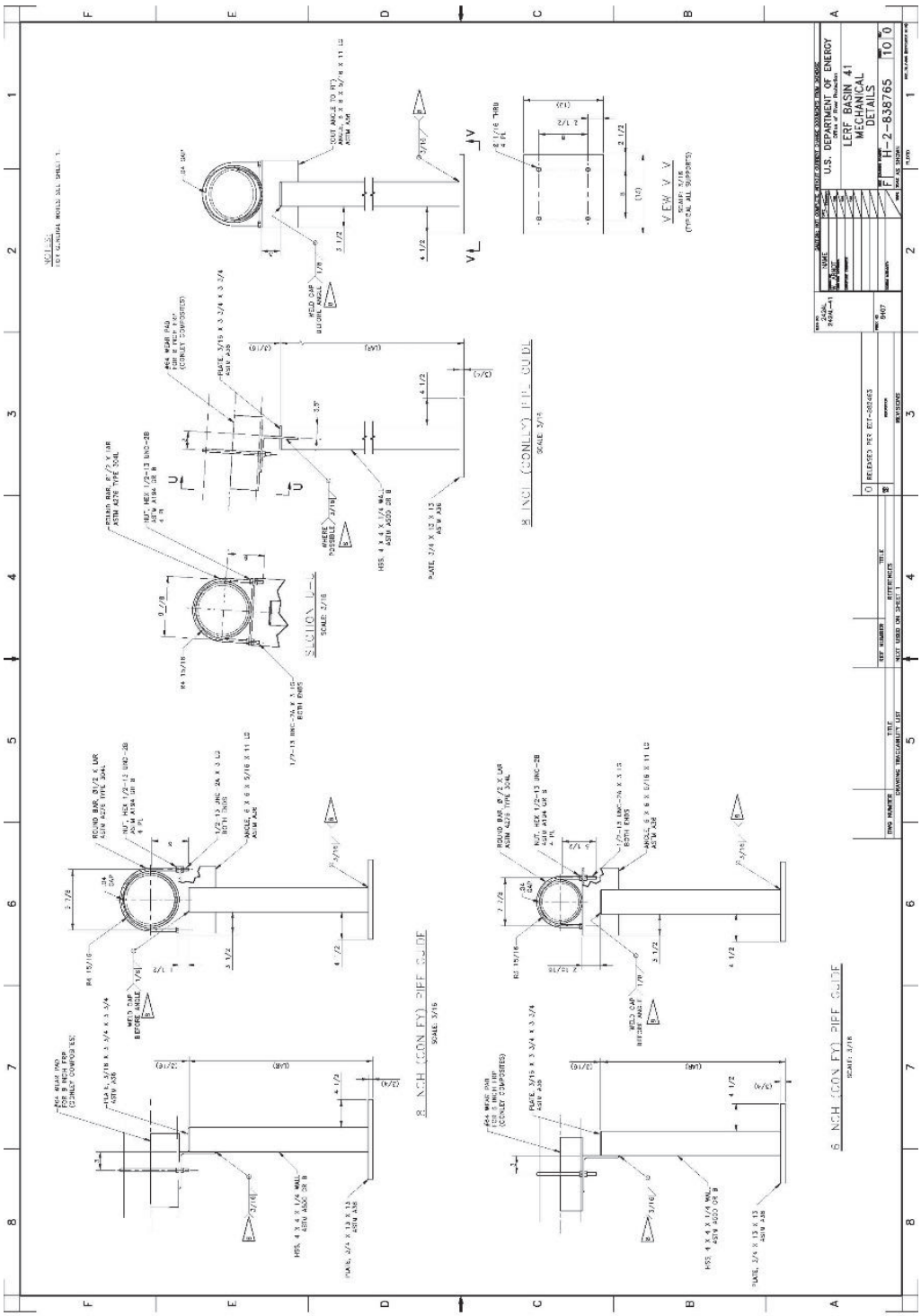

Sargent & Lundy Engineering Services, Inc.

CALCULATION SHEET

Project No. S54413.024	**Calculation No.** S54413.024-M-001	**Rev.** 0	**Page No.** 51 of 192
Title: LERF Basin 41 Buried Piping Analysis			
Prepared By: JD Williams	**Date:** 5/13/20	**Checked By:** JS Huisingh	**Date:** 5/13/20

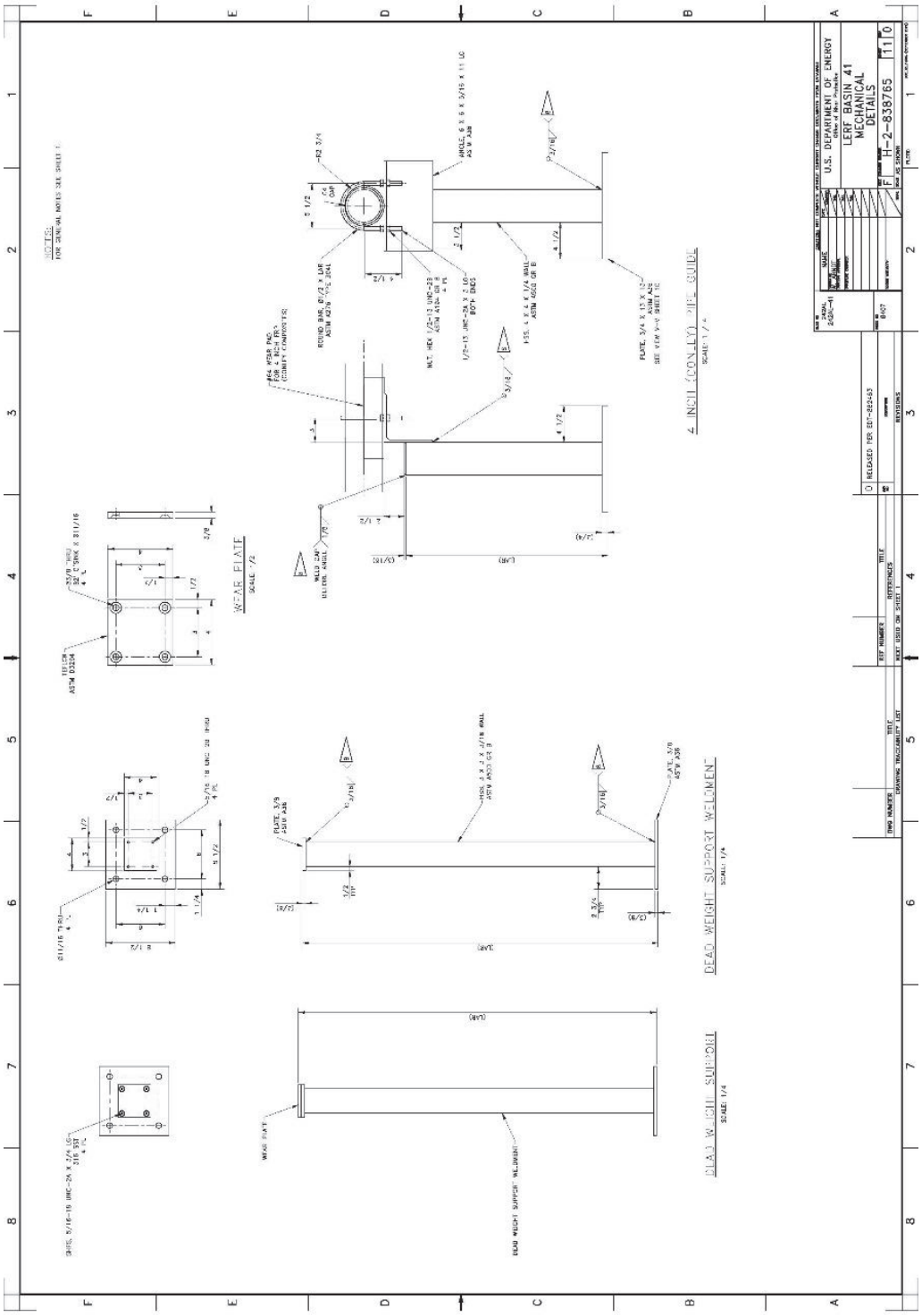

CALCULATION SHEET

Project No. S54413.024	**Calculation No.** S54413.024-M-001	**Rev.** 0	**Page No.** 52 of 192
Title: LERF Basin 41 Buried Piping Analysis			
Prepared By: JD Williams	**Date:** 5/13/20	**Checked By:** JS Huisingh	**Date:** 5/13/20

APPENDIX B

AUTOPIPE MODEL ISOMETRIC VIEWS

CALCULATION SHEET

Project No. S54413.024	**Calculation No.** S54413.024-M-001	**Rev.** 0	**Page No.** 53 of 192
Title: LERF Basin 41 Buried Piping Analysis			
Prepared By: JD Williams	**Date:** 5/13/20	**Checked By:** JS Huisingh	**Date:** 5/13/20

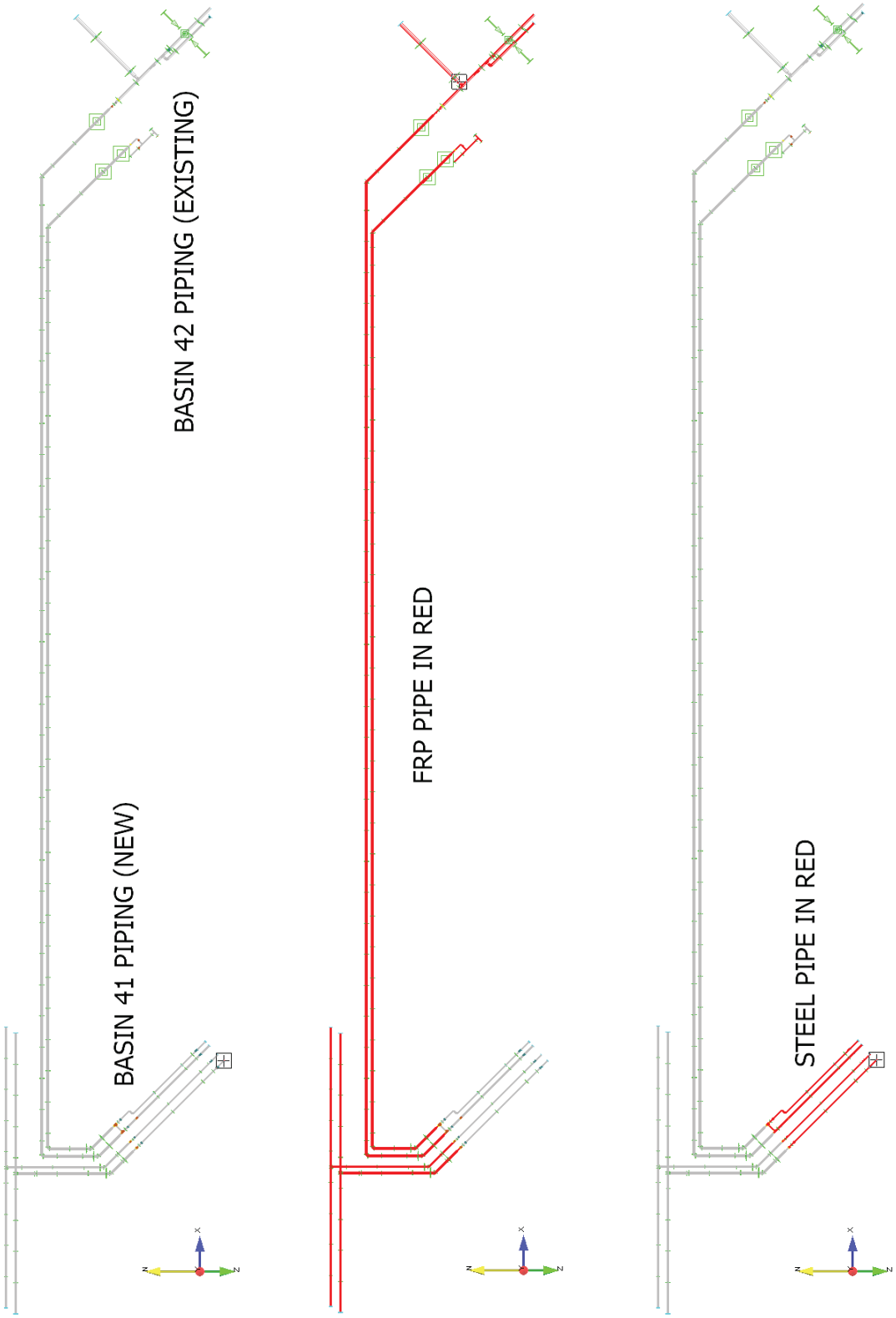

CALCULATION SHEET

Project No. S54413.024	**Calculation No.** S54413.024-M-001	**Rev.** 0	**Page No.** 54 of 192
Title: LERF Basin 41 Buried Piping Analysis			
Prepared By: JD Williams	**Date:** 5/13/20	**Checked By:** JS Huisingh	**Date:** 5/13/20

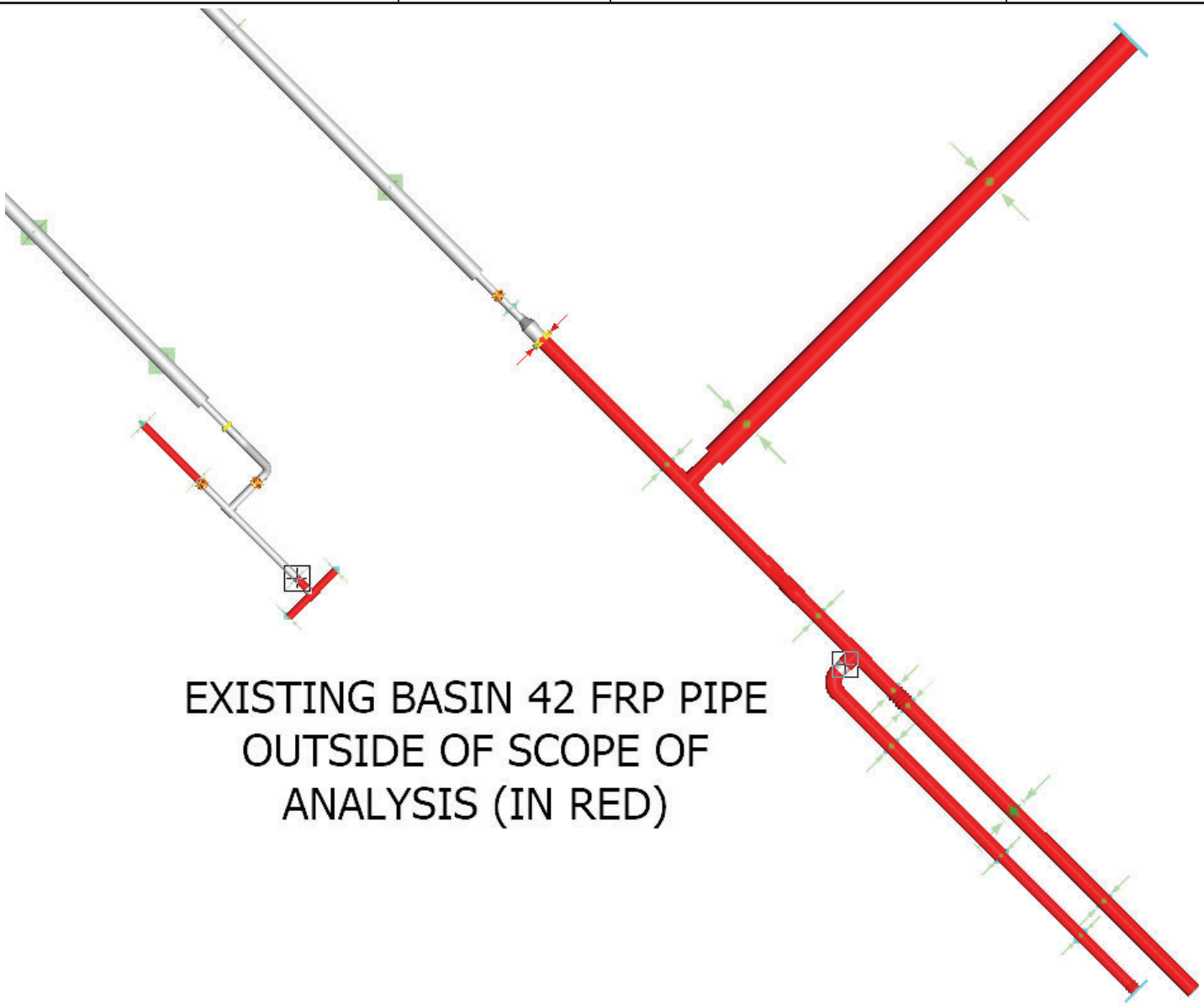

CALCULATION SHEET

Project No. S54413.024	**Calculation No.** S54413.024-M-001	**Rev.** 0	**Page No.** 55 of 192
Title: LERF Basin 41 Buried Piping Analysis			
Prepared By: JD Williams	**Date:** 5/13/20	**Checked By:** JS Huisingh	**Date:** 5/13/20

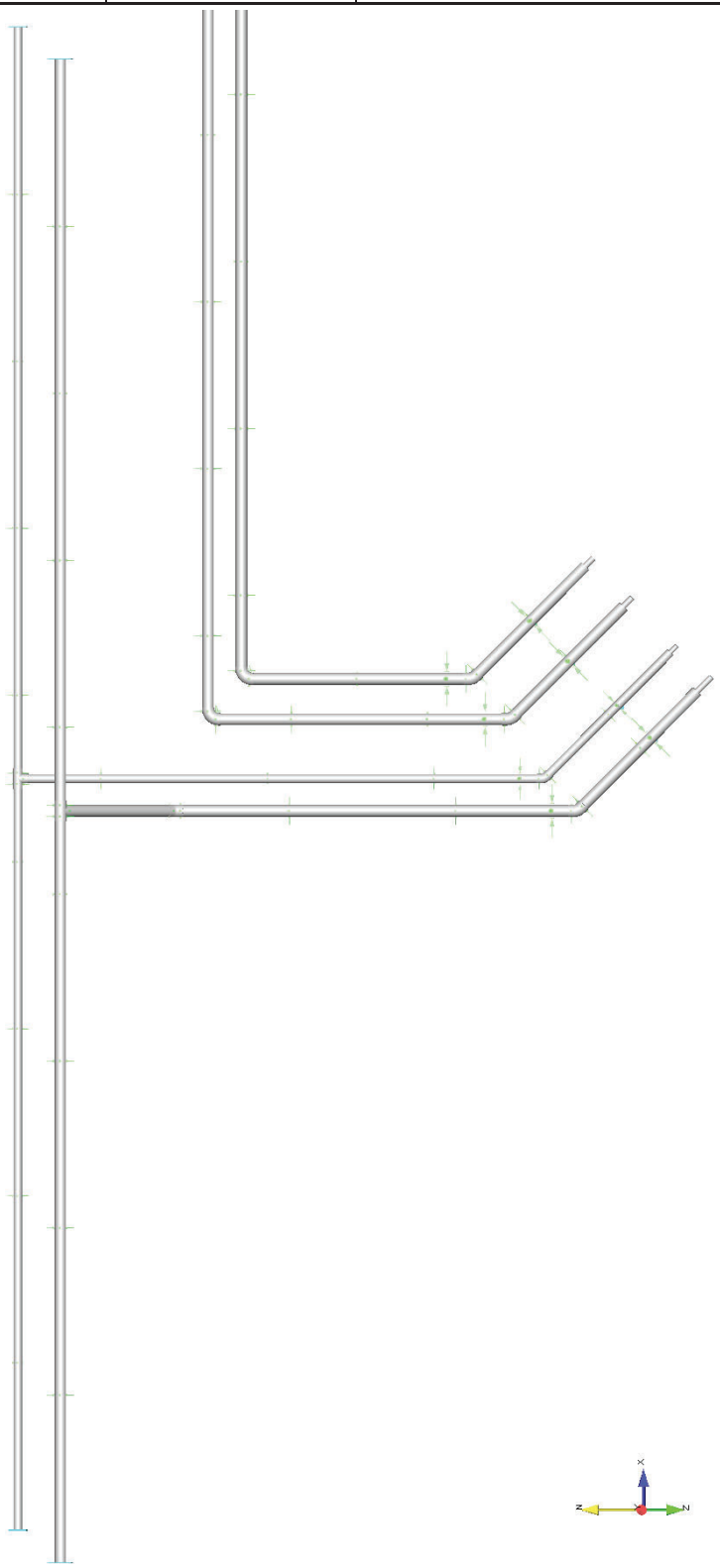

CALCULATION SHEET

Project No. S54413.024	**Calculation No.** S54413.024-M-001	**Rev.** 0	**Page No.** 56 of 192
Title: LERF Basin 41 Buried Piping Analysis			
Prepared By: JD Williams	**Date:** 5/13/20	**Checked By:** JS Huisingh	**Date:** 5/13/20

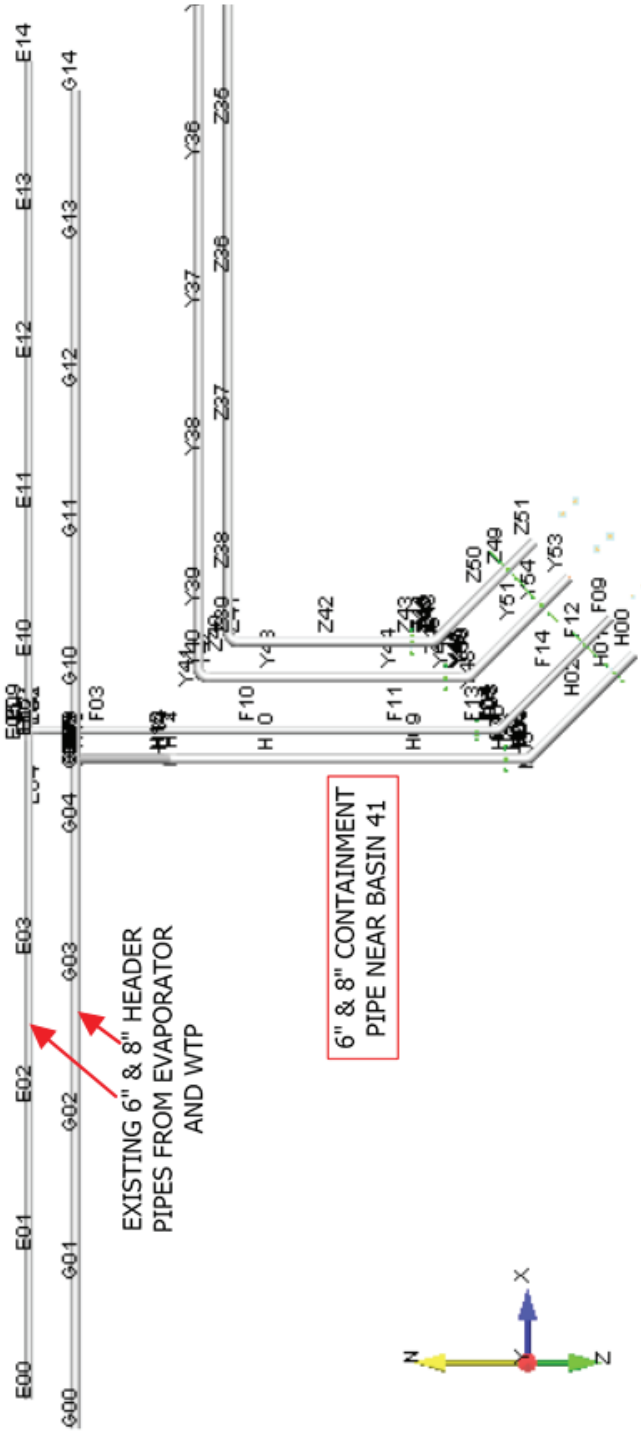

Sargent & Lundy Engineering Services, Inc.

CALCULATION SHEET

Project No. S54413.024	**Calculation No.** S54413.024-M-001	**Rev.** 0	**Page No.** 57 of 192
Title: LERF Basin 41 Buried Piping Analysis			
Prepared By: JD Williams	**Date:** 5/13/20	**Checked By:** JS Huisingh	**Date:** 5/13/20

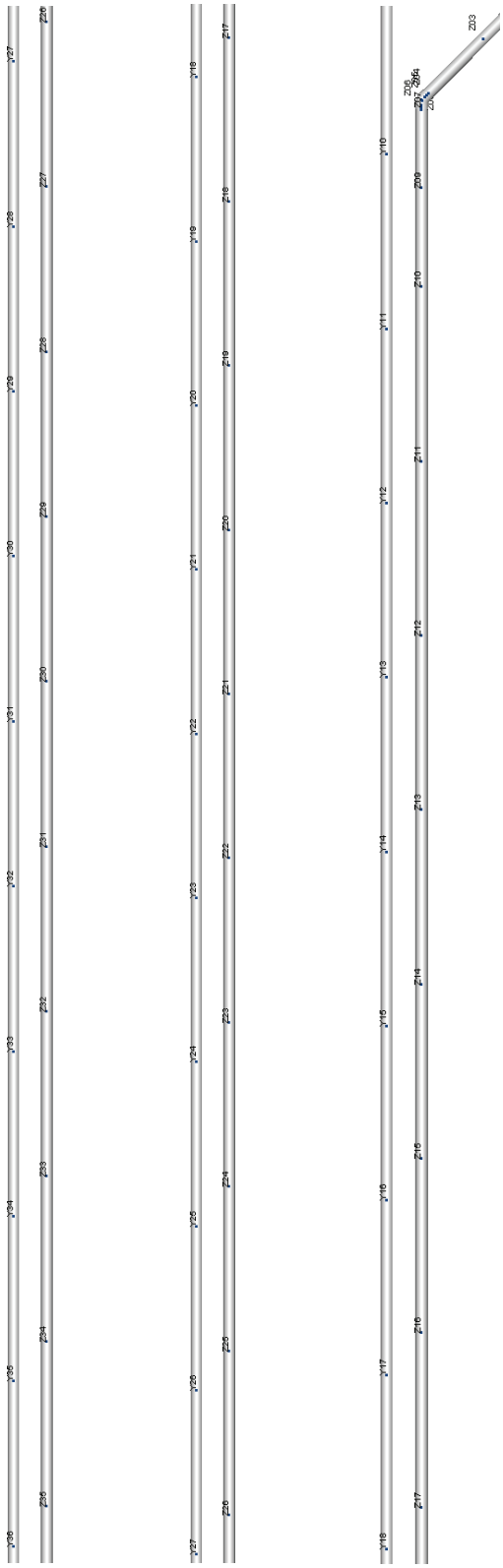

CALCULATION SHEET

Project No. S54413.024	**Calculation No.** S54413.024-M-001	**Rev.** 0	**Page No.** 58 of 192
Title: LERF Basin 41 Buried Piping Analysis			
Prepared By: JD Williams	**Date:** 5/13/20	**Checked By:** JS Huisingh	**Date:** 5/13/20

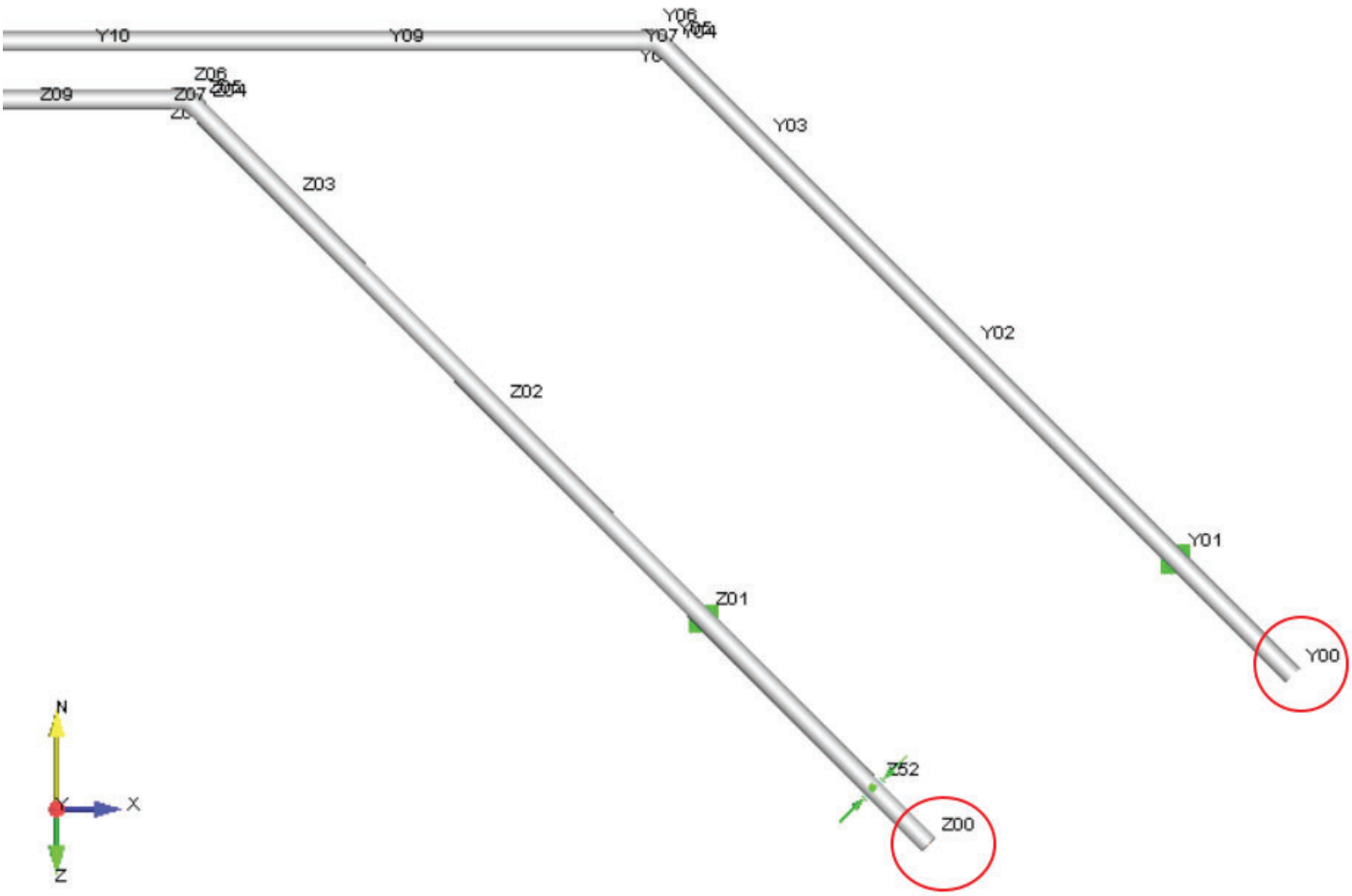

END OF 8" CONTAINMENT PIPES NEAR BASIN 42

CALCULATION SHEET

Project No. S54413.024	**Calculation No.** S54413.024-M-001	**Rev.** 0	**Page No.** 59 of 192
Title: LERF Basin 41 Buried Piping Analysis			
Prepared By: JD Williams	**Date:** 5/13/20	**Checked By:** JS Huisingh	**Date:** 5/13/20

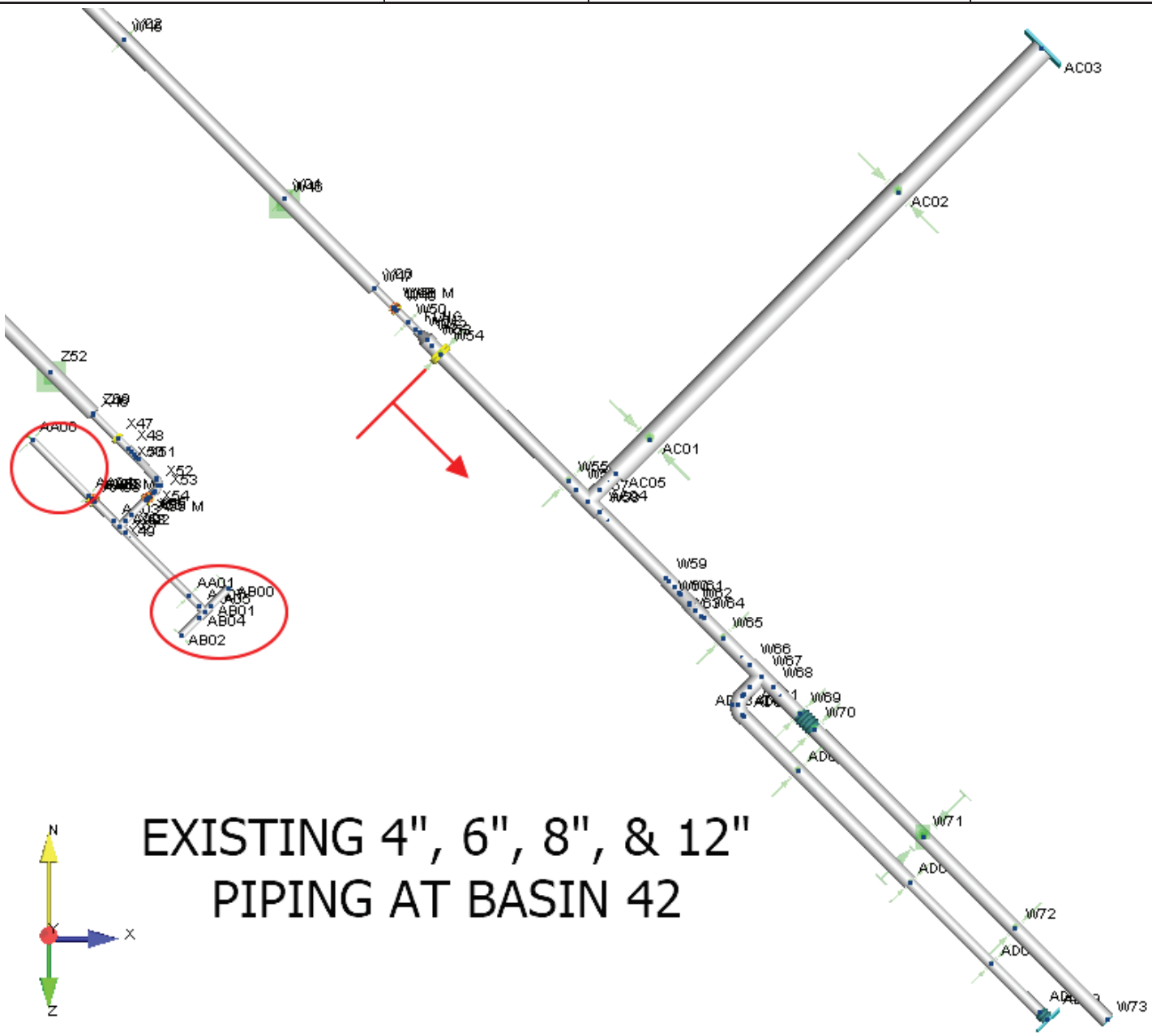

Sargent & Lundy Engineering Services, Inc.

CALCULATION SHEET

Project No. S54413.024	**Calculation No.** S54413.024-M-001	**Rev.** 0	**Page No.** 60 of 192
Title: LERF Basin 41 Buried Piping Analysis			
Prepared By: JD Williams	**Date:** 5/13/20	**Checked By:** JS Huisingh	**Date:** 5/13/20

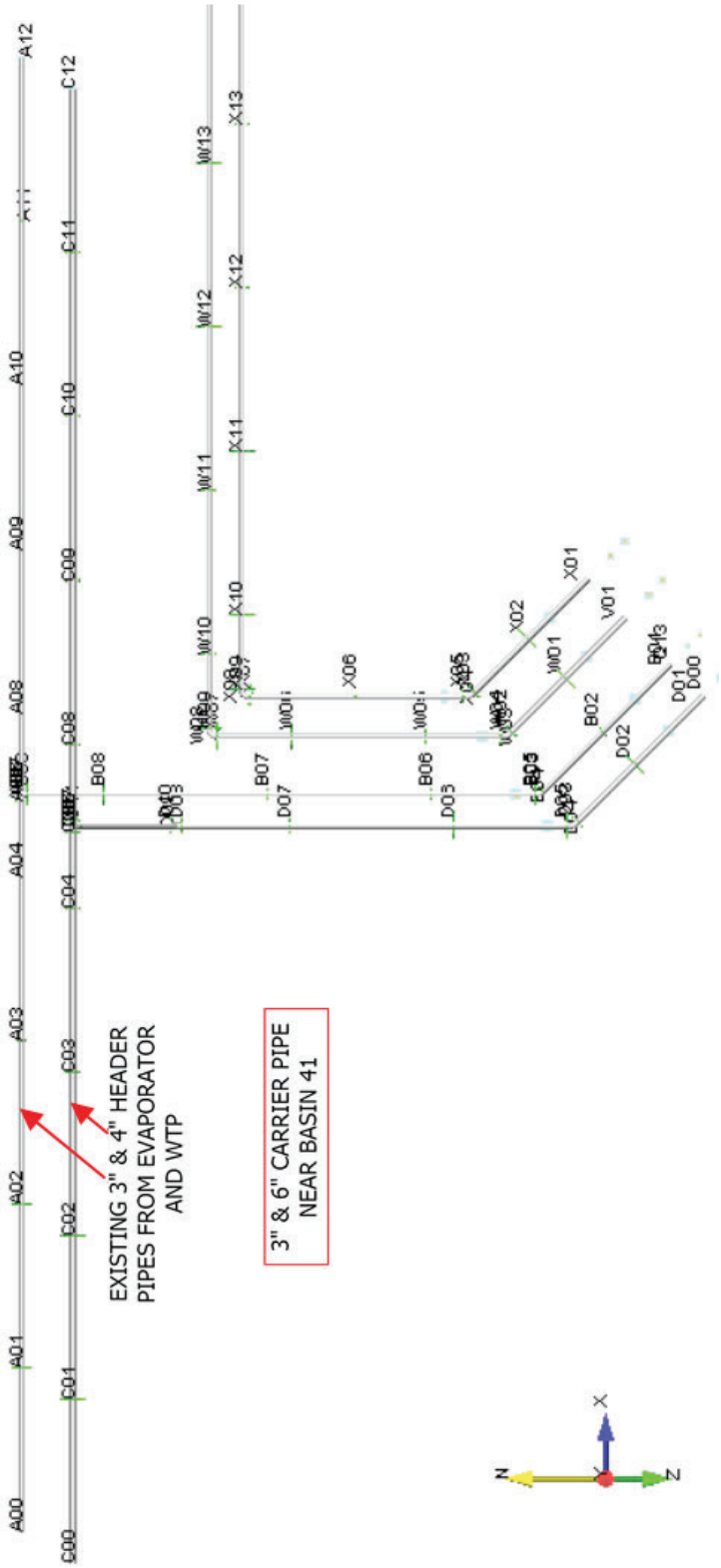

CALCULATION SHEET

Project No. S54413.024	**Calculation No.** S54413.024-M-001	**Rev.** 0	**Page No.** 61 of 192
Title: LERF Basin 41 Buried Piping Analysis			
Prepared By: JD Williams	**Date:** 5/13/20	**Checked By:** JS Huisingh	**Date:** 5/13/20

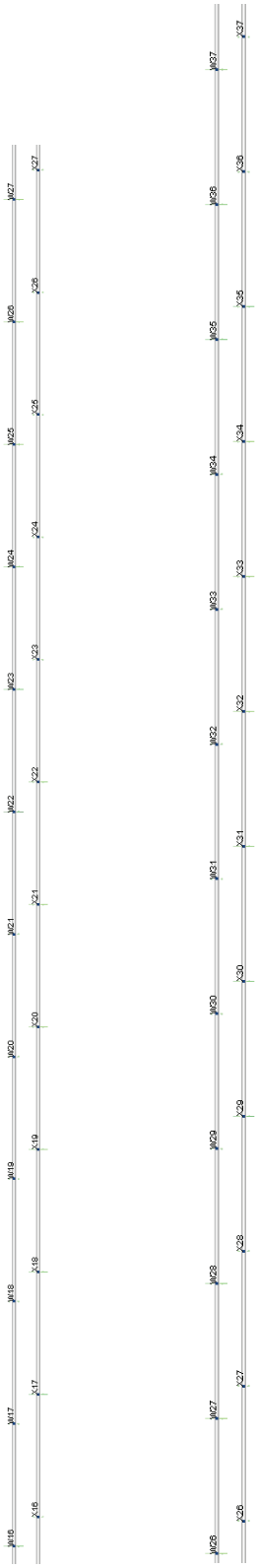

CALCULATION SHEET

Project No. S54413.024	**Calculation No.** S54413.024-M-001	**Rev.** 0	**Page No.** 62 of 192
Title: LERF Basin 41 Buried Piping Analysis			
Prepared By: JD Williams	**Date:** 5/13/20	**Checked By:** JS Huisingh	**Date:** 5/13/20

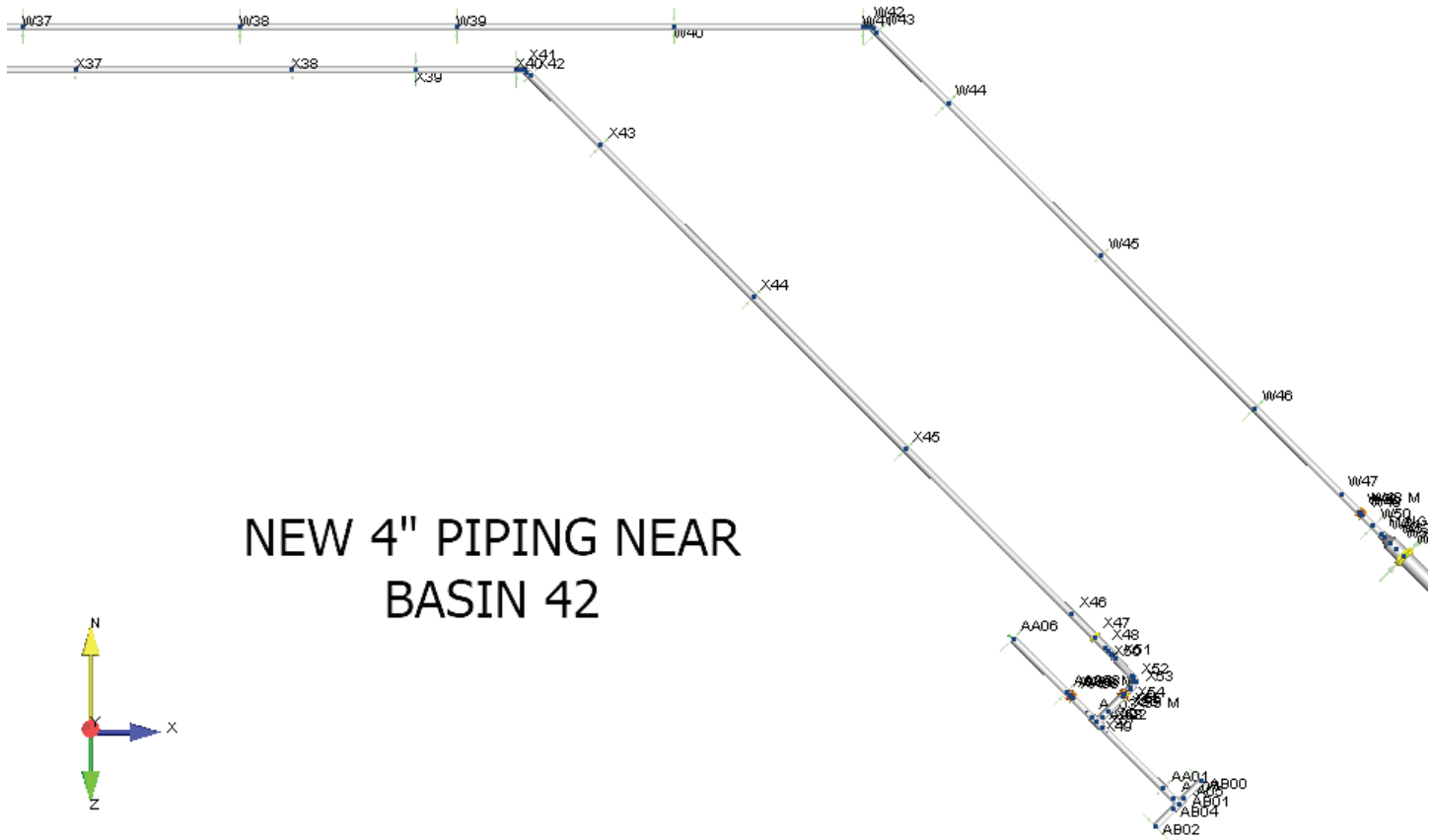

CALCULATION SHEET

Project No. S54413.024	**Calculation No.** S54413.024-M-001	**Rev.** 0	**Page No.** 63 of 192
Title: LERF Basin 41 Buried Piping Analysis			
Prepared By: JD Williams	**Date:** 5/13/20	**Checked By:** JS Huisingh	**Date:** 5/13/20

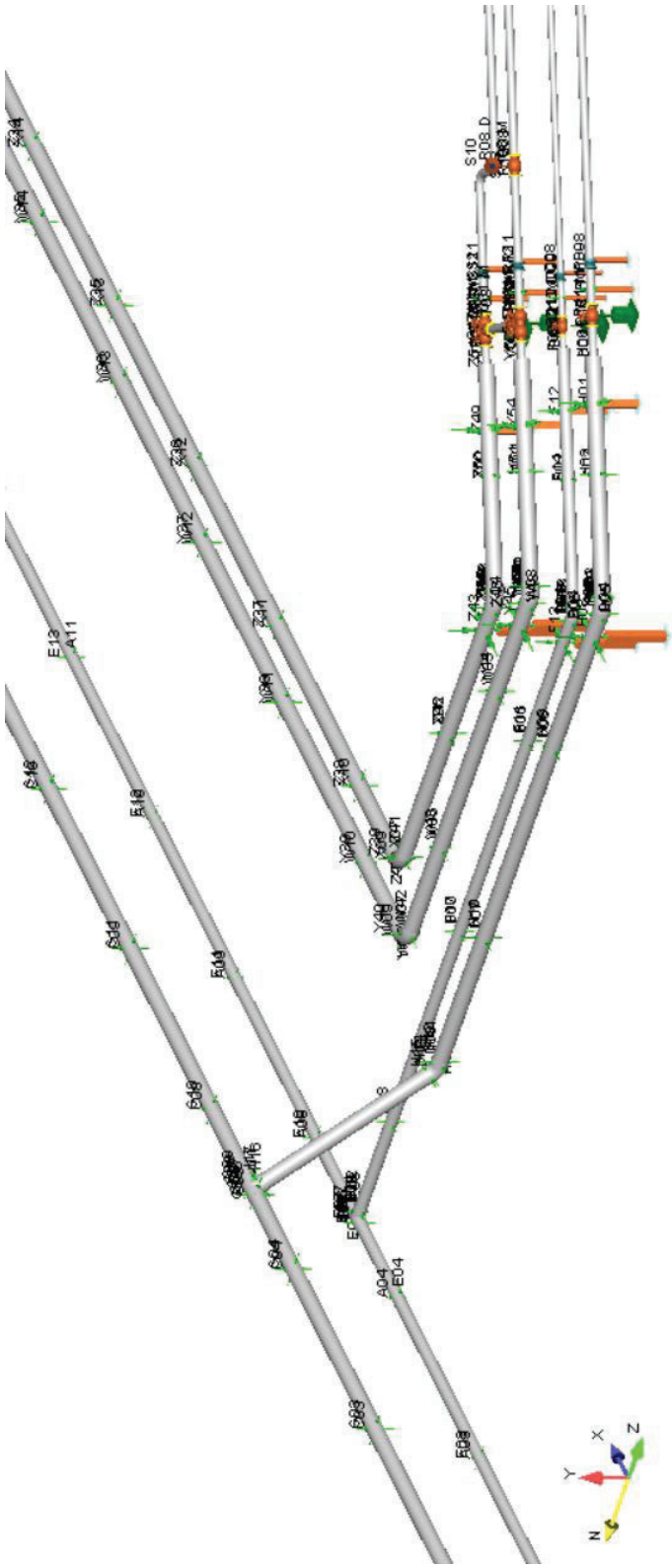

CALCULATION SHEET

Project No. S54413.024	**Calculation No.** S54413.024-M-001	**Rev.** 0	**Page No.** 64 of 192
Title: LERF Basin 41 Buried Piping Analysis			
Prepared By: JD Williams	**Date:** 5/13/20	**Checked By:** JS Huisingh	**Date:** 5/13/20

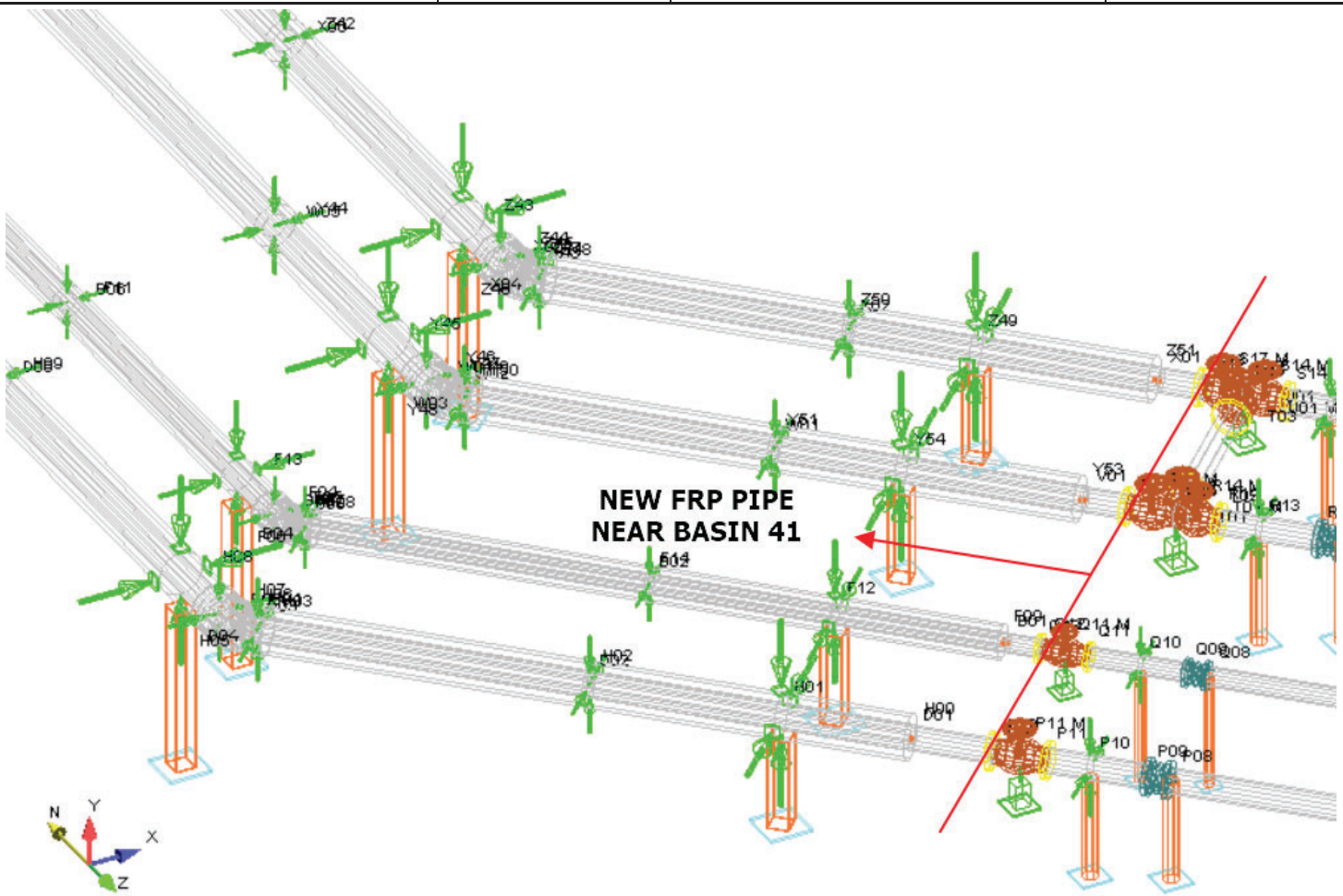

CALCULATION SHEET

Project No. S54413.024	**Calculation No.** S54413.024-M-001	**Rev.** 0	**Page No.** 65 of 192
Title: LERF Basin 41 Buried Piping Analysis			
Prepared By: JD Williams	**Date:** 5/13/20	**Checked By:** JS Huisingh	**Date:** 5/13/20

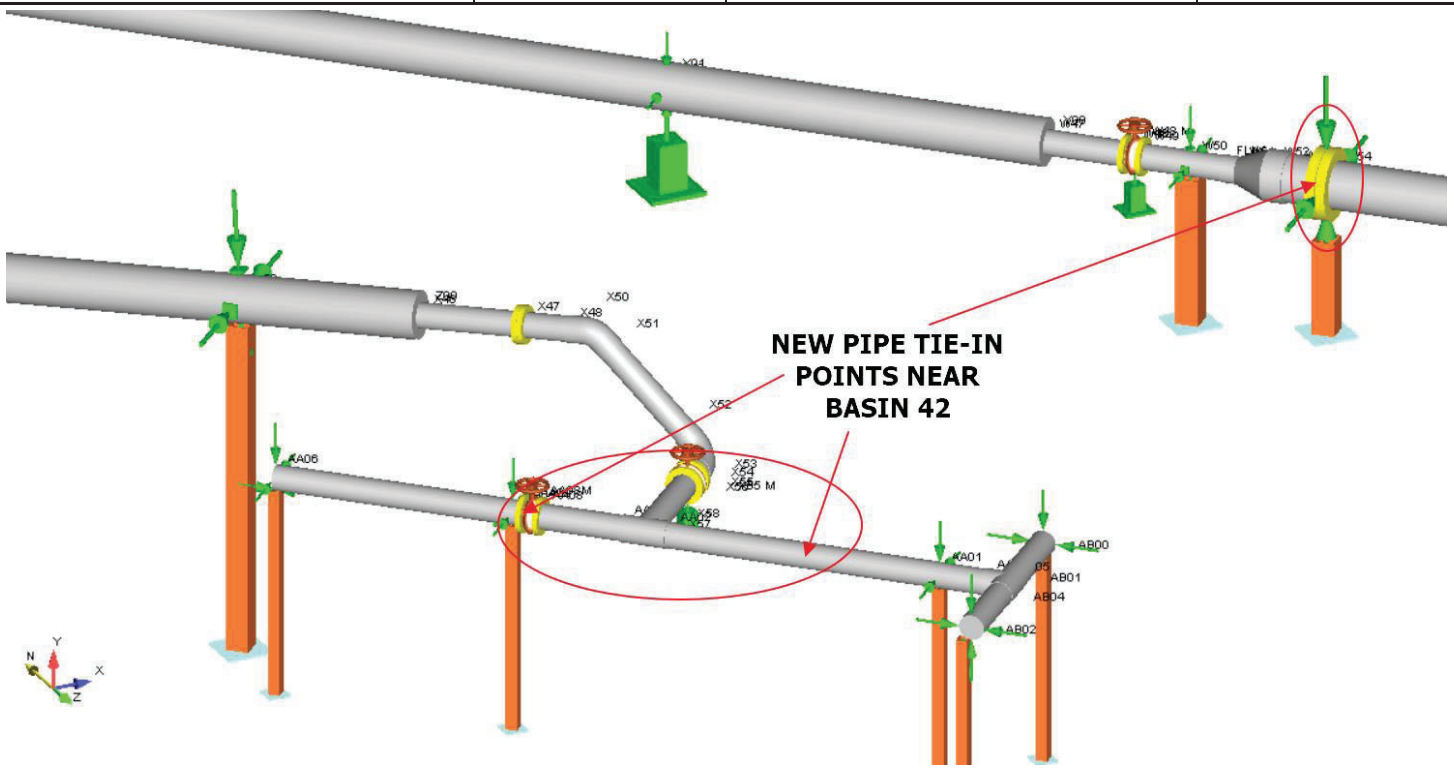

CALCULATION SHEET

Project No. S54413.024	**Calculation No.** S54413.024-M-001	**Rev.** 0	**Page No.** 66 of 192
Title: LERF Basin 41 Buried Piping Analysis			
Prepared By: JD Williams	**Date:** 5/13/20	**Checked By:** JS Huisingh	**Date:** 5/13/20

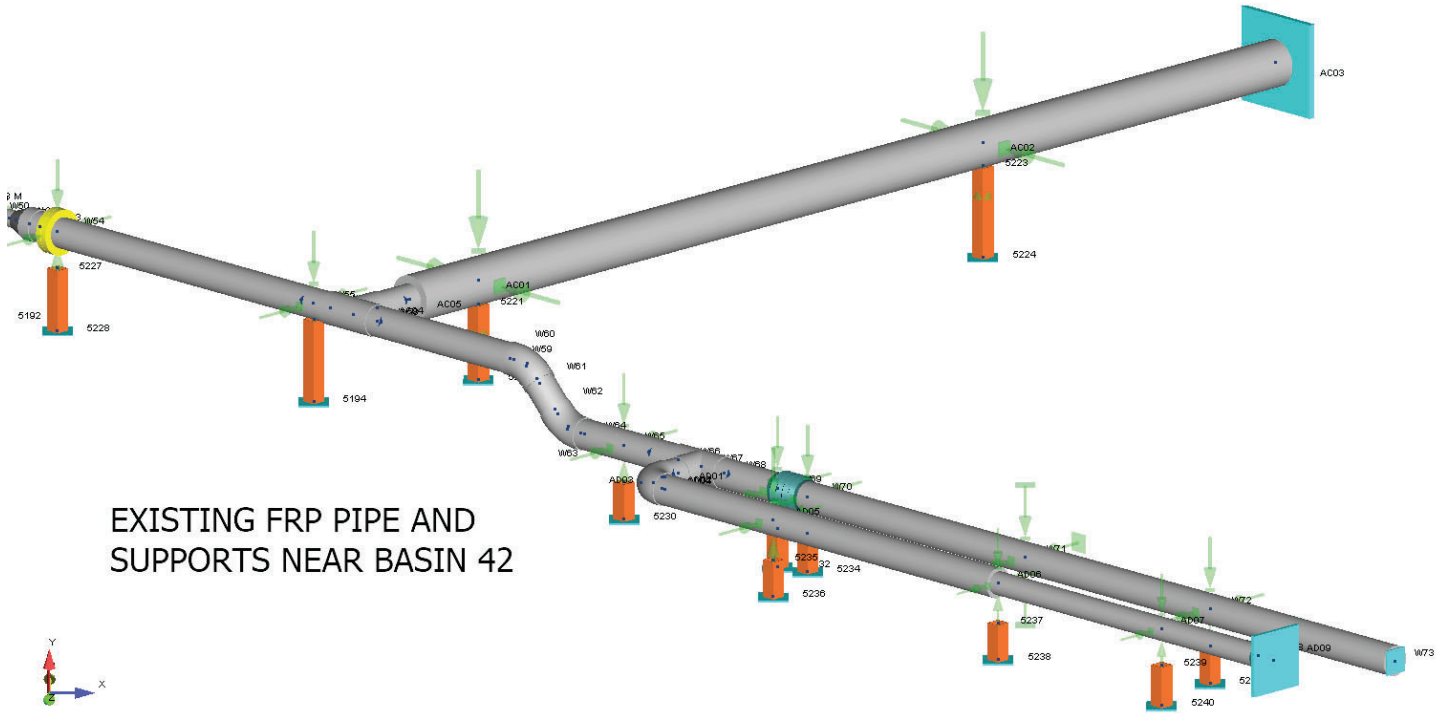

APPENDIX C

MODEL INPUT AND OUTPUT REPORT

Given the large model size, the amount of input and output has been significantly abbreviated as noted below. A representative sampling is provided below.

Additional information can be made available upon request.

CALCULATION SHEET

Project No. S54413.024	**Calculation No.** S54413.024-M-001	**Rev.** 0	**Page No.** 68 of 192
Title: LERF Basin 41 Buried Piping Analysis			
Prepared By: JD Williams	**Date:** 5/13/20	**Checked By:** JS Huisingh	**Date:** 5/13/20

```
-----------------------------------------------------------------------------------------------------------
LERF_FRP_3m
04/24/2020                                                                          BENTLEY
12:37 PM                                                                            AutoPIPE Advanced 11.01.00.24
-----------------------------------------------------------------------------------------------------------
```

```
        *                           *******   **  *******   *******
       ***              **         **    **  **  **    **  **
      ** **            ******       **    **  **  **    **  **
     **   **    **   **  **   *****  *******   **  *******   *****
    *********   **   **  **  **   **  **        **  **        **
   **       **  **   **  **  **   **  **        **  **        **
  **         **  *****   **   *****   **        **  **        *******
```

Pipe Stress Analysis and Design Program

Version: 11.01.00.24

Edition: Advanced

Developed and Maintained by

BENTLEY SYSTEMS, INCORPORATED
1600 Riviera Ave., Suite 300
Walnut Creek, CA 94596

CALCULATION SHEET

Project No. S54413.024	**Calculation No.** S54413.024-M-001	**Rev.** 0	**Page No.** 69 of 192
Title: LERF Basin 41 Buried Piping Analysis			
Prepared By: JD Williams	**Date:** 5/13/20	**Checked By:** JS Huisingh	**Date:** 5/13/20

```
-----------------------------------------------------------------------------------------------------------
LERF_FRP_3m
04/24/2020                                                                          BENTLEY
12:37 PM                                                                            AutoPIPE Advanced 11.01.00.24
-----------------------------------------------------------------------------------------------------------


          ************************************************************
          **                                                        **
          **              AUTOPIPE SYSTEM INFORMATION               **
          **                                                        **
          ************************************************************


          SYSTEM NAME : LERF_FRP_3m

          PROJECT ID  :


          PREPARED BY  : ______________________________

          CHECKED BY   : ______________________________

          1ST APPROVER : ______________________________

          2ND APPROVER : ______________________________


          PIPING CODE            : ISO 14692

          YEAR                   : 2002 + 2005 addenda

          VERTICAL AXIS          : Y

          AMBIENT TEMPERATURE    :   60.0 deg F

          COMPONENT LIBRARY      : ISOGRPP

          MATERIAL LIBRARY       : ISOGRPM

          MODEL REVISION NUMBER  :   173
```

CALCULATION SHEET

Project No. S54413.024	**Calculation No.** S54413.024-M-001	**Rev.** 0	**Page No.** 70 of 192
Title: LERF Basin 41 Buried Piping Analysis			
Prepared By: JD Williams	**Date:** 5/13/20	**Checked By:** JS Huisingh	**Date:** 5/13/20

LERF_FRP_3m
04/24/2020 BENTLEY
12:37 PM AutoPIPE Advanced 11.01.00.24

T A B L E O F C O N T E N T S

Components..... 1
Coordinates..... 87
Segment Data..... 99
Pipe Properties..... 100
Material Properties..... 102
Material Allowables..... 104
Temperature and Pressure..... 106
Soil Properties..... 120
Loads Summary..... 129
Support..... 139
Bend..... 153
Tee..... 157
Center of Gravity..... 158
Analysis Summary..... 159
Restraint Reactions..... 177
Code Compliance..... 414
Result Summary.....11068

CALCULATION SHEET

Project No. S54413.024	**Calculation No.** S54413.024-M-001	**Rev.** 0	**Page No.** 71 of 192
Title: LERF Basin 41 Buried Piping Analysis			
Prepared By: JD Williams	**Date:** 5/13/20	**Checked By:** JS Huisingh	**Date:** 5/13/20

```
-----------------------------------------------------------------------------------------------------------------
LERF_FRP_3m
04/24/2020                                                          BENTLEY
12:36 PM                                                            AutoPIPE Advanced 11.01.00.24  MODEL  PAGE   1
-----------------------------------------------------------------------------------------------------------------

                 C O M P O N E N T   D A T A   L I S T I N G

 ---------------------------------------------------------------------------
 *** SEGMENT A

 ---------------------------------------------------------------------------
 From A00 to A01, DX= 10.00 ft                                        Run

 PIPE DATA:
   Pipe Id= 3CON40, Material= NS, Poisson= 0.230, Nom Size= 3.000, OD= 3.390 inch, Sch= NS,
   Wall Thk= 0.135 inch, Mill= 0.017 inch, Cor= 0 inch, Pipe Density= 115.80 lb/cu.ft,
   Pipe Unit Wgt= 1.11 lb/ft, Content Sp Gr= 1.500, Content Unit Wgt= 4.97 lb/ft, Insul Thk= 2.000 inch,
   Insul Material= OTHER, Insul Density= 6.00 lb/cu.ft, Insul Unit Wgt= 1.41 lb/ft, Cladding Thickness = 0 inch,
   Lining Thk= 0 inch, Long Weld factor= 1.00, Circ Weld factor= 1.00, Long Modulus= 1.75000 E6 psi,
   Hoop Modulus= 2.50000 E6 psi, Shear Modulus= 1.30000 E6 psi, Sc= 6454.0 psi, Syc= 0.0 psi

 OPERATING DATA:
   P1= 150.00 psi, P2= 0 psi, P3= 150.00 psi, T1= 120.00 deg F, T2= 32.00 deg F, T3= 120.00 deg F,
   Exp1= 0.68400 in/100ft, Exp2= -0.54700 in/100ft, Exp3= 0.68400 in/100ft, E1= 1.63000 E6 psi,
   E2= 1.86000 E6 psi, E3= 1.63000 E6 psi, Sh1= 0.85 psi, Sh2= 0.85 psi, Sh3= 0.85 psi

 POINT DATA:
   A00, Coordinates, X= -45.07 ft, Y= -0.28 ft, Z= -0.01 ft

 SUPPORT DATA:
   A00, Anchor, KTX= Rigid, KTY= Rigid, KTZ= Rigid, KRX= Rigid, KRY= Rigid, KRZ= Rigid

 ---------------------------------------------------------------------------
 From A01 to A02, DX= 10.00 ft                                        Run

 POINT DATA:
   A01, Coordinates, X= -35.07 ft, Y= -0.28 ft, Z= -0.01 ft

 SUPPORT DATA:
   A01, Guide, Support Id= A03  1, Connected to E01, Tag No.= INT, Comp.Wt = 0.000 lb, Stiffness= RIGID

 ---------------------------------------------------------------------------
 From A02 to A03, DX= 10.00 ft                                        Run

 POINT DATA:
   A02, Coordinates, X= -25.07 ft, Y= -0.28 ft, Z= -0.01 ft

 SUPPORT DATA:
   A02, Guide, Support Id= A04  1, Connected to E02, Tag No.= INT, Comp.Wt = 0.000 lb, Stiffness= RIGID

 ---------------------------------------------------------------------------
 From A03 to A04, DX= 10.00 ft                                        Run

 POINT DATA:
   A03, Coordinates, X= -15.07 ft, Y= -0.28 ft, Z= -0.01 ft

 SUPPORT DATA:
   A03, Guide, Support Id= A05  1, Connected to E03, Tag No.= INT, Comp.Wt = 0.000 lb, Stiffness= RIGID

 ---------------------------------------------------------------------------
 From A04 to A05, DX= 4.66 ft                                         Run
```

```
-----------------------------------------------------------------------------------------------------------
LERF_FRP_3m
04/24/2020                                                    BENTLEY
12:36 PM                                                      AutoPIPE Advanced 11.01.00.24  MODEL  PAGE   2
-----------------------------------------------------------------------------------------------------------

                C O M P O N E N T   D A T A   L I S T I N G

 POINT DATA:
   A04, Coordinates, X= -5.07 ft, Y= -0.28 ft, Z= -0.01 ft

 SUPPORT DATA:
   A04, Guide, Support Id= A06  1, Connected to E04, Tag No.= INT, Comp.Wt = 0.000 lb, Stiffness= RIGID

 ---------------------------------------------------------------------------
 From A05 to A06, DX= 0.34 ft                                        Run

 PIPE DATA:
   Pipe Id= FITT3, Material= NS, OD= 3.710 inch, Wall Thk= 0.295 inch, Mill= 0.037 inch,
   Pipe Density= 115.80 lb/cu.ft, Pipe Unit Wgt= 2.55 lb/ft, Content Sp Gr= 1.500, Content Unit Wgt= 4.97 lb/ft,
   Insul Density= 6.00 lb/cu.ft, Insul Unit Wgt= 1.49 lb/ft, Syc= 0.0 psi

 POINT DATA:
   A05, Coordinates, X= -0.41 ft, Y= -0.28 ft, Z= -0.01 ft

 SUPPORT DATA:
   A05, Guide, Support Id= A12  1, Connected to E06, Tag No.= INT, Comp.Wt = 0.000 lb, Stiffness= RIGID

 ---------------------------------------------------------------------------
 From A06 to A07, DX= 0.34 ft                                        Tee

 COMPONENT DATA (Tee Header, Center= A06):
   Reinforced tee, SIFI= 1.52, SIFO= 1.52, Pad thick= 0.00 inch

 POINT DATA:
   A06, Coordinates, X= -0.07 ft, Y= -0.28 ft, Z= -0.01 ft

 ---------------------------------------------------------------------------
 From A07 to A08, DX= 4.66 ft                                        Run

 PIPE DATA:
   Pipe Id= 3CON40, Material= NS, OD= 3.390 inch, Wall Thk= 0.135 inch, Mill= 0.017 inch,
   Pipe Density= 115.80 lb/cu.ft, Pipe Unit Wgt= 1.11 lb/ft, Content Sp Gr= 1.500, Content Unit Wgt= 4.97 lb/ft,
   Insul Density= 6.00 lb/cu.ft, Insul Unit Wgt= 1.41 lb/ft, Syc= 0.0 psi

 POINT DATA:
   A07, Coordinates, X= 0.27 ft, Y= -0.28 ft, Z= -0.01 ft

 SUPPORT DATA:
   A07, Guide, Support Id= A11  1, Connected to E08, Tag No.= INT, Comp.Wt = 0.000 lb, Stiffness= RIGID

 ---------------------------------------------------------------------------
 From A08 to A09, DX= 10.00 ft                                       Run

 POINT DATA:
   A08, Coordinates, X= 4.93 ft, Y= -0.28 ft, Z= -0.01 ft

 SUPPORT DATA:
   A08, Guide, Support Id= A07  1, Connected to E10, Tag No.= INT, Comp.Wt = 0.000 lb, Stiffness= RIGID

 ---------------------------------------------------------------------------
 From A09 to A10, DX= 10.00 ft                                       Run
```

```
-----------------------------------------------------------------------------------------------------------
LERF_FRP_3m
04/24/2020                                                    BENTLEY
12:36 PM                                                      AutoPIPE Advanced 11.01.00.24  MODEL  PAGE   3
-----------------------------------------------------------------------------------------------------------

                C O M P O N E N T   D A T A   L I S T I N G

 POINT DATA:
   A09, Coordinates, X= 14.93 ft, Y= -0.28 ft, Z= -0.01 ft

 SUPPORT DATA:
   A09, Guide, Support Id= A08  1, Connected to E11, Tag No.= INT, Comp.Wt = 0.000 lb, Stiffness= RIGID

 ---------------------------------------------------------------------------
 From A10 to A11, DX= 10.00 ft                                      Run

 POINT DATA:
   A10, Coordinates, X= 24.93 ft, Y= -0.28 ft, Z= -0.01 ft

 SUPPORT DATA:
   A10, Guide, Support Id= A09  1, Connected to E12, Tag No.= INT, Comp.Wt = 0.000 lb, Stiffness= RIGID

 ---------------------------------------------------------------------------
 From A11 to A12, DX= 10.00 ft, DZ= 0 ft, L= 10.00 ft               Run

 POINT DATA:
   A11, Coordinates, X= 34.93 ft, Y= -0.28 ft, Z= -0.01 ft
   A12, Coordinates, X= 44.93 ft, Y= -0.28 ft, Z= -0.01 ft

 SUPPORT DATA:
   A11, Guide, Support Id= A10  1, Connected to E13, Tag No.= INT, Comp.Wt = 0.000 lb, Stiffness= RIGID
   A12, Anchor, KTX= Rigid, KTY= Rigid, KTZ= Rigid, KRX= Rigid, KRY= Rigid, KRZ= Rigid

 ---------------------------------------------------------------------------
 ---------------------------------------------------------------------------
 *** SEGMENT B

 ---------------------------------------------------------------------------
 From Q13 to B01, DX= -0.33 ft, DZ= -0.33 ft, L= 0.47 ft            Junc

 PIPE DATA:
   Pipe Id= 3CON40, Material= NS, Pipe Density= 115.80 lb/cu.ft, Pipe Unit Wgt= 1.11 lb/ft,
   Content Sp Gr= 1.500, Content Unit Wgt= 4.97 lb/ft

 OPERATING DATA:
   T1= 150.00 deg F, T2= -25.00 deg F, Exp1= 1.02600 in/100ft, Exp2= -1.19700 in/100ft, E1= 1.56000 E6 psi,
   E2= 2.01000 E6 psi

 POINT DATA:
   Q13, Coordinates, X= 7.88 ft, Y= -0.28 ft, Z= 39.56 ft

 ---------------------------------------------------------------------------
 From B01 to B02, DX= -3.78 ft, DY= 0 ft, DZ= -3.78 ft, L= 5.35 ft  Run

 POINT DATA:
   B01, Coordinates, X= 7.55 ft, Y= -0.28 ft, Z= 39.23 ft

 ---------------------------------------------------------------------------
 From B02 to B03, DX= -3.63 ft, DZ= -3.63 ft, L= 5.13 ft            Run

 POINT DATA:
   B02, Coordinates, X= 3.77 ft, Y= -0.28 ft, Z= 35.44 ft
```

```
-----------------------------------------------------------------------------------------------------------
LERF_FRP_3m
04/24/2020                                                    BENTLEY
12:36 PM                                                      AutoPIPE Advanced 11.01.00.24  MODEL  PAGE   4
-----------------------------------------------------------------------------------------------------------

                C O M P O N E N T   D A T A   L I S T I N G

 SUPPORT DATA:
   B02, Guide, Support Id= B11  1, Connected to F14, Tag No.= INT, Comp.Wt = 0.000 lb, Stiffness= RIGID

 ---------------------------------------------------------------------------
 From B03 to B04, DX= -0.21 ft, DZ= -0.21 ft, L= 0.30 ft                Run

 PIPE DATA:
   Pipe Id= FITT3, Material= NS, OD= 3.710 inch, Wall Thk= 0.295 inch, Mill= 0.037 inch,
   Pipe Density= 115.80 lb/cu.ft, Pipe Unit Wgt= 2.55 lb/ft, Content Sp Gr= 1.500, Content Unit Wgt= 4.97 lb/ft,
   Insul Density= 6.00 lb/cu.ft, Insul Unit Wgt= 1.49 lb/ft, Syc= 0.0 psi

 POINT DATA:
   B03, Coordinates, X= 0.14 ft, Y= -0.28 ft, Z= 31.81 ft

 SUPPORT DATA:
   B03, Guide, Support Id= B05  1, Connected to F07, Tag No.= INT, Comp.Wt = 0.000 lb, Stiffness= RIGID

 ---------------------------------------------------------------------------
 From B04 to B05, DZ= -0.30 ft                                          Bend

 COMPONENT DATA (Bend, TIP= B04, Near= B04 N, Mid= B04 M, Far= B04 F):
    , Radius= 3.92 inch, Bend angle= 45.00 deg, Mid point at 50.00 percent, End flanges= 0, Flex= Auto,
   SIFI Circ= 2.50, SIFO Circ= 2.50, SIFI Long= 1.25, SIFO Long= 1.00

 POINT DATA:
   B04, Coordinates, X= -0.07 ft, Y= -0.28 ft, Z= 31.60 ft
   B04 N, Coordinates, X= 0.03 ft, Y= -0.28 ft, Z= 31.70 ft
   B04 M, Coordinates, X= -0.04 ft, Y= -0.28 ft, Z= 31.59 ft
   B04 F, Coordinates, X= -0.07 ft, Y= -0.28 ft, Z= 31.47 ft

 ---------------------------------------------------------------------------
 From B05 to B06, DZ= -6.31 ft                                          Run

 PIPE DATA:
   Pipe Id= 3CON40, Material= NS, OD= 3.390 inch, Wall Thk= 0.135 inch, Mill= 0.017 inch,
   Pipe Density= 115.80 lb/cu.ft, Pipe Unit Wgt= 1.11 lb/ft, Content Sp Gr= 1.500, Content Unit Wgt= 4.97 lb/ft,
   Insul Density= 6.00 lb/cu.ft, Insul Unit Wgt= 1.41 lb/ft, Syc= 0.0 psi

 POINT DATA:
   B05, Coordinates, X= -0.07 ft, Y= -0.28 ft, Z= 31.30 ft

 SUPPORT DATA:
   B05, Guide, Support Id= B06  1, Connected to F05, Tag No.= INT, Comp.Wt = 0.000 lb, Stiffness= RIGID

 ---------------------------------------------------------------------------
 From B06 to B07, DZ= -10.00 ft                                         Run

 POINT DATA:
   B06, Coordinates, X= -0.07 ft, Y= -0.28 ft, Z= 24.99 ft

 SUPPORT DATA:
   B06, Guide, Support Id= B08  1, Connected to F11, Tag No.= INT, Comp.Wt = 0.000 lb, Stiffness= RIGID

 ---------------------------------------------------------------------------
 From B07 to B08, DZ= -10.00 ft                                         Run
```

CALCULATION SHEET

Project No. S54413.024	**Calculation No.** S54413.024-M-001	**Rev.** 0	**Page No.** 75 of 192
Title: LERF Basin 41 Buried Piping Analysis			
Prepared By: JD Williams	**Date:** 5/13/20	**Checked By:** JS Huisingh	**Date:** 5/13/20

```
-----------------------------------------------------------------------------------------------------------
LERF_FRP_3m
04/24/2020                                                    BENTLEY
12:36 PM                                                      AutoPIPE Advanced 11.01.00.24  MODEL  PAGE   5
-----------------------------------------------------------------------------------------------------------

                 C O M P O N E N T   D A T A   L I S T I N G

 OPERATING DATA:
   T1= 120.00 deg F, T2= 32.00 deg F, Exp1= 0.68400 in/100ft, Exp2= -0.54700 in/100ft, E1= 1.63000 E6 psi,
   E2= 1.86000 E6 psi

 POINT DATA:
   B07, Coordinates, X= -0.07 ft, Y= -0.28 ft, Z= 14.99 ft

 SUPPORT DATA:
   B07, Guide, Support Id= B07  2, Connected to F10, Tag No.= INT, Comp.Wt = 0.000 lb, Stiffness= RIGID

 ---------------------------------------------------------------------------
 From B08 to B09, DZ= -4.66 ft                                        Run

 POINT DATA:
   B08, Coordinates, X= -0.07 ft, Y= -0.28 ft, Z= 4.99 ft

 SUPPORT DATA:
   B08, Guide, Support Id= B03  1, Connected to F03, Tag No.= INT, Comp.Wt = 0.000 lb, Stiffness= RIGID

 ---------------------------------------------------------------------------
 From B09 to A06, DZ= -0.34 ft                                        Run

 PIPE DATA:
   Pipe Id= FITT3, Material= NS, OD= 3.710 inch, Wall Thk= 0.295 inch, Mill= 0.037 inch,
   Pipe Density= 115.80 lb/cu.ft, Pipe Unit Wgt= 2.55 lb/ft, Content Sp Gr= 1.500, Content Unit Wgt= 4.97 lb/ft,
   Insul Density= 6.00 lb/cu.ft, Insul Unit Wgt= 1.49 lb/ft, Syc= 0.0 psi

 POINT DATA:
   B09, Coordinates, X= -0.07 ft, Y= -0.28 ft, Z= 0.33 ft
   A06, Coordinates, X= -0.07 ft, Y= -0.28 ft, Z= -0.01 ft

 SUPPORT DATA:
   B09, Guide, Support Id= B07  1, Connected to F01, Tag No.= INT, Comp.Wt = 0.000 lb, Stiffness= RIGID

 ---------------------------------------------------------------------------
 ---------------------------------------------------------------------------
 *** SEGMENT C

 ---------------------------------------------------------------------------
 From C00 to C01, DX= 10.00 ft                                        Run

 PIPE DATA:
   Pipe Id= 4CON40, Material= NS, Nom Size= 4 in, OD= 4.440 inch, Wall Thk= 0.160 inch, Mill= 0.020 inch,
   Pipe Density= 115.80 lb/cu.ft, Pipe Unit Wgt= 1.73 lb/ft, Content Sp Gr= 1.500, Content Unit Wgt= 8.67 lb/ft,
   Insul Density= 6.00 lb/cu.ft, Insul Unit Wgt= 1.69 lb/ft, Syc= 0.0 psi

 POINT DATA:
   C00, Coordinates, X= -47.00 ft, Y= 6.00 ft, Z= 3.10 ft

 SUPPORT DATA:
   C00, Anchor, KTX= Rigid, KTY= Rigid, KTZ= Rigid, KRX= Rigid, KRY= Rigid, KRZ= Rigid

 ---------------------------------------------------------------------------
 From C01 to C02, DX= 10.00 ft                                        Run
```

CALCULATION SHEET

Project No. S54413.024	**Calculation No.** S54413.024-M-001	**Rev.** 0	**Page No.** 76 of 192
Title: LERF Basin 41 Buried Piping Analysis			
Prepared By: JD Williams	**Date:** 5/13/20	**Checked By:** JS Huisingh	**Date:** 5/13/20

```
-----------------------------------------------------------------------------------------------------------------
LERF_FRP_3m
04/24/2020                                                          BENTLEY
12:36 PM                                                            AutoPIPE Advanced 11.01.00.24  MODEL  PAGE   6
-----------------------------------------------------------------------------------------------------------------

                 C O M P O N E N T   D A T A   L I S T I N G

 POINT DATA:
   C01, Coordinates, X= -37.00 ft, Y= 6.00 ft, Z= 3.10 ft

 SUPPORT DATA:
   C01, Guide, Support Id= C03  1, Connected to G01, Tag No.= INT, Comp.Wt = 0.000 lb, Stiffness= RIGID

 ---------------------------------------------------------------------------
 From C02 to C03, DX= 10.00 ft                                        Run

 POINT DATA:
   C02, Coordinates, X= -27.00 ft, Y= 6.00 ft, Z= 3.10 ft

 SUPPORT DATA:
   C02, Guide, Support Id= C04  1, Connected to G02, Tag No.= INT, Comp.Wt = 0.000 lb, Stiffness= RIGID

 ---------------------------------------------------------------------------
 From C03 to C04, DX= 10.00 ft                                        Run

 POINT DATA:
   C03, Coordinates, X= -17.00 ft, Y= 6.00 ft, Z= 3.10 ft

 SUPPORT DATA:
   C03, Guide, Support Id= C05  1, Connected to G03, Tag No.= INT, Comp.Wt = 0.000 lb, Stiffness= RIGID

 ---------------------------------------------------------------------------
 From C04 to C05, DX= 4.66 ft                                         Run

 POINT DATA:
   C04, Coordinates, X= -7.00 ft, Y= 6.00 ft, Z= 3.10 ft

 SUPPORT DATA:
   C04, Guide, Support Id= C06  1, Connected to G04, Tag No.= INT, Comp.Wt = 0.000 lb, Stiffness= RIGID

 ---------------------------------------------------------------------------
 From C05 to C06, DX= 0.34 ft                                         Run

 PIPE DATA:
   Pipe Id= FITT4, Material= NS, OD= 4.710 inch, Wall Thk= 0.295 inch, Mill= 0.037 inch,
   Pipe Density= 115.80 lb/cu.ft, Pipe Unit Wgt= 3.29 lb/ft, Content Sp Gr= 1.500, Content Unit Wgt= 8.67 lb/ft,
   Insul Density= 6.00 lb/cu.ft, Insul Unit Wgt= 1.76 lb/ft, Syc= 0.0 psi

 POINT DATA:
   C05, Coordinates, X= -2.34 ft, Y= 6.00 ft, Z= 3.10 ft

 SUPPORT DATA:
   C05, Guide, Support Id= C13  1, Connected to G06, Tag No.= INT, Comp.Wt = 0.000 lb, Stiffness= RIGID

 ---------------------------------------------------------------------------
 From C06 to C07, DX= 0.34 ft                                         Tee

 COMPONENT DATA (Tee Header, Center= C06):
   Reinforced tee, SIFI= 1.74, SIFO= 1.74, Pad thick= 0.00 inch

 POINT DATA:
   C06, Coordinates, X= -2.00 ft, Y= 6.00 ft, Z= 3.10 ft
```

CALCULATION SHEET

Project No. S54413.024	**Calculation No.** S54413.024-M-001	**Rev.** 0	**Page No.** 77 of 192
Title: LERF Basin 41 Buried Piping Analysis			
Prepared By: JD Williams	**Date:** 5/13/20	**Checked By:** JS Huisingh	**Date:** 5/13/20

```
-----------------------------------------------------------------------------------------------------------
LERF_FRP_3m
04/24/2020                                                    BENTLEY
12:36 PM                                                      AutoPIPE Advanced 11.01.00.24  MODEL  PAGE   7
-----------------------------------------------------------------------------------------------------------

                 C O M P O N E N T   D A T A   L I S T I N G

 ---------------------------------------------------------------------------
 From C07 to C08, DX= 4.66 ft                                        Run

 PIPE DATA:
   Pipe Id= 4CON40, Material= NS, OD= 4.440 inch, Wall Thk= 0.160 inch, Mill= 0.020 inch,
   Pipe Density= 115.80 lb/cu.ft, Pipe Unit Wgt= 1.73 lb/ft, Content Sp Gr= 1.500, Content Unit Wgt= 8.67 lb/ft,
   Insul Density= 6.00 lb/cu.ft, Insul Unit Wgt= 1.69 lb/ft, Syc= 0.0 psi

 POINT DATA:
   C07, Coordinates, X= -1.66 ft, Y= 6.00 ft, Z= 3.10 ft

 SUPPORT DATA:
   C07, Guide, Support Id= C12  1, Connected to G08, Tag No.= INT, Comp.Wt = 0.000 lb, Stiffness= RIGID

 ---------------------------------------------------------------------------
 From C08 to C09, DX= 10.00 ft                                       Run

 POINT DATA:
   C08, Coordinates, X= 3.00 ft, Y= 6.00 ft, Z= 3.10 ft

 SUPPORT DATA:
   C08, Guide, Support Id= C07  1, Connected to G10, Tag No.= INT, Comp.Wt = 0.000 lb, Stiffness= RIGID

 ---------------------------------------------------------------------------
 From C09 to C10, DX= 10.00 ft                                       Run

 POINT DATA:
   C09, Coordinates, X= 13.00 ft, Y= 6.00 ft, Z= 3.10 ft

 SUPPORT DATA:
   C09, Guide, Support Id= C08  1, Connected to G11, Tag No.= INT, Comp.Wt = 0.000 lb, Stiffness= RIGID

 ---------------------------------------------------------------------------
 From C10 to C11, DX= 10.00 ft                                       Run

 POINT DATA:
   C10, Coordinates, X= 23.00 ft, Y= 6.00 ft, Z= 3.10 ft

 SUPPORT DATA:
   C10, Guide, Support Id= C09  1, Connected to G12, Tag No.= INT, Comp.Wt = 0.000 lb, Stiffness= RIGID

 ---------------------------------------------------------------------------
 From C11 to C12, DX= 10.00 ft                                       Run

 POINT DATA:
   C11, Coordinates, X= 33.00 ft, Y= 6.00 ft, Z= 3.10 ft
   C12, Coordinates, X= 43.00 ft, Y= 6.00 ft, Z= 3.10 ft

 SUPPORT DATA:
   C11, Guide, Support Id= C10  1, Connected to G13, Tag No.= INT, Comp.Wt = 0.000 lb, Stiffness= RIGID
   C12, Anchor, KTX= Rigid, KTY= Rigid, KTZ= Rigid, KRX= Rigid, KRY= Rigid, KRZ= Rigid

 ---------------------------------------------------------------------------
 ---------------------------------------------------------------------------
 *** SEGMENT D
```

CALCULATION SHEET

Project No. S54413.024	**Calculation No.** S54413.024-M-001	**Rev.** 0	**Page No.** 78 of 192
Title: LERF Basin 41 Buried Piping Analysis			
Prepared By: JD Williams	**Date:** 5/13/20	**Checked By:** JS Huisingh	**Date:** 5/13/20

```
-----------------------------------------------------------------------------------------------------------
LERF_FRP_3m
04/24/2020                                                    BENTLEY
12:36 PM                                                      AutoPIPE Advanced 11.01.00.24  MODEL  PAGE   8
-----------------------------------------------------------------------------------------------------------

                 C O M P O N E N T   D A T A   L I S T I N G

 ---------------------------------------------------------------------------
 From D00 to D01, DX= -0.84 ft, DZ= -0.84 ft, L= 1.19 ft                    Junc

 PIPE DATA:
   Pipe Id= 4CON40, Material= NS, Pipe Density= 115.80 lb/cu.ft, Pipe Unit Wgt= 1.73 lb/ft,
   Content Sp Gr= 1.500, Content Unit Wgt= 8.67 lb/ft

 OPERATING DATA:
   T1= 150.00 deg F, T2= -25.00 deg F, Exp1= 1.02600 in/100ft, Exp2= -1.19700 in/100ft, E1= 1.56000 E6 psi,
   E2= 2.01000 E6 psi

 POINT DATA:
   D00, Coordinates, X= 6.01 ft, Y= -0.28 ft, Z= 41.63 ft

 ---------------------------------------------------------------------------
 From D01 to D02, DX= -3.40 ft, DZ= -3.40 ft, L= 4.81 ft                    Run

 POINT DATA:
   D01, Coordinates, X= 5.17 ft, Y= -0.28 ft, Z= 40.79 ft

 ---------------------------------------------------------------------------
 From D02 to D03, DX= -3.50 ft, DZ= -3.50 ft, L= 4.95 ft                    Run

 POINT DATA:
   D02, Coordinates, X= 1.77 ft, Y= -0.28 ft, Z= 37.39 ft

 SUPPORT DATA:
   D02, Guide, Support Id= D13  1, Connected to H02, Tag No.= INT, Comp.Wt = 0.000 lb, Stiffness= RIGID

 ---------------------------------------------------------------------------
 From D03 to D04, DX= -0.27 ft, DZ= -0.27 ft, L= 0.38 ft                    Run

 PIPE DATA:
   Pipe Id= FITT4, Material= NS, OD= 4.710 inch, Wall Thk= 0.295 inch, Mill= 0.037 inch,
   Pipe Density= 115.80 lb/cu.ft, Pipe Unit Wgt= 3.29 lb/ft, Content Sp Gr= 1.500, Content Unit Wgt= 8.67 lb/ft,
   Insul Density= 6.00 lb/cu.ft, Insul Unit Wgt= 1.76 lb/ft, Syc= 0.0 psi

 POINT DATA:
   D03, Coordinates, X= -1.73 ft, Y= -0.28 ft, Z= 33.89 ft

 SUPPORT DATA:
   D03, Guide, Support Id= D05  1, Connected to H04, Tag No.= INT, Comp.Wt = 0.000 lb, Stiffness= RIGID

 ---------------------------------------------------------------------------
 From D04 to D05, DZ= -0.38 ft                                              Bend

 COMPONENT DATA (Bend, TIP= D04, Near= D04 N, Mid= D04 M, Far= D04 F):
    , Radius= 4.53 inch, Bend angle= 45.00 deg, Mid point at 50.00 percent, End flanges= 0, Flex= Auto,
   SIFI Circ= 2.50, SIFO Circ= 2.50, SIFI Long= 1.64, SIFO Long= 1.21

 POINT DATA:
   D04, Coordinates, X= -2.00 ft, Y= -0.28 ft, Z= 33.62 ft
   D04 N, Coordinates, X= -1.89 ft, Y= -0.28 ft, Z= 33.73 ft
   D04 M, Coordinates, X= -1.97 ft, Y= -0.28 ft, Z= 33.61 ft
   D04 F, Coordinates, X= -2.00 ft, Y= -0.28 ft, Z= 33.47 ft
```

CALCULATION SHEET

Project No. S54413.024	**Calculation No.** S54413.024-M-001	**Rev.** 0	**Page No.** 79 of 192
Title: LERF Basin 41 Buried Piping Analysis			
Prepared By: JD Williams	**Date:** 5/13/20	**Checked By:** JS Huisingh	**Date:** 5/13/20

```
---------------------------------------------------------------------------------------------------------
LERF_FRP_3m
04/24/2020                                                    BENTLEY
12:36 PM                                                      AutoPIPE Advanced 11.01.00.24  MODEL  PAGE   9
---------------------------------------------------------------------------------------------------------

                 C O M P O N E N T   D A T A   L I S T I N G

 ------------------------------------------------------------------------------
 From D05 to D06, DZ= -6.94 ft                                          Run

 PIPE DATA:
   Pipe Id= 4CON40, Material= NS, OD= 4.440 inch, Wall Thk= 0.160 inch, Mill= 0.020 inch,
   Pipe Density= 115.80 lb/cu.ft, Pipe Unit Wgt= 1.73 lb/ft, Content Sp Gr= 1.500, Content Unit Wgt= 8.67 lb/ft,
   Insul Density= 6.00 lb/cu.ft, Insul Unit Wgt= 1.69 lb/ft, Syc= 0.0 psi

 POINT DATA:
   D05, Coordinates, X= -2.00 ft, Y= -0.28 ft, Z= 33.24 ft

 SUPPORT DATA:
   D05, Guide, Support Id= D06  1, Connected to H06, Tag No.= INT, Comp.Wt = 0.000 lb, Stiffness= RIGID

 ------------------------------------------------------------------------------
 From D06 to D07, DZ= -10.00 ft                                         Run

 POINT DATA:
   D06, Coordinates, X= -2.00 ft, Y= -0.28 ft, Z= 26.30 ft

 SUPPORT DATA:
   D06, Guide, Support Id= D10  2, Connected to H09, Tag No.= INT, Comp.Wt = 0.000 lb, Stiffness= RIGID

 ------------------------------------------------------------------------------
 From D07 to D08, DZ= -6.53 ft                                          Run

 OPERATING DATA:
   T1= 120.00 deg F, T2= 32.00 deg F, Exp1= 0.68400 in/100ft, Exp2= -0.54700 in/100ft, E1= 1.63000 E6 psi,
   E2= 1.86000 E6 psi

 POINT DATA:
   D07, Coordinates, X= -2.00 ft, Y= -0.28 ft, Z= 16.30 ft

 SUPPORT DATA:
   D07, Guide, Support Id= D09  2, Connected to H10, Tag No.= INT, Comp.Wt = 0.000 lb, Stiffness= RIGID

 ------------------------------------------------------------------------------
 From D08 to D09, DZ= -0.38 ft                                          Run

 PIPE DATA:
   Pipe Id= FITT4, Material= NS, OD= 4.710 inch, Wall Thk= 0.295 inch, Mill= 0.037 inch,
   Pipe Density= 115.80 lb/cu.ft, Pipe Unit Wgt= 3.29 lb/ft, Content Sp Gr= 1.500, Content Unit Wgt= 8.67 lb/ft,
   Insul Density= 6.00 lb/cu.ft, Insul Unit Wgt= 1.76 lb/ft, Syc= 0.0 psi

 POINT DATA:
   D08, Coordinates, X= -2.00 ft, Y= -0.28 ft, Z= 9.76 ft

 SUPPORT DATA:
   D08, Guide, Support Id= D09  1, Connected to H12, Tag No.= INT, Comp.Wt = 0.000 lb, Stiffness= RIGID

 ------------------------------------------------------------------------------
 From D09 to D10, DY= 0.27 ft, DZ= -0.27 ft, L= 0.38 ft                 Bend

 COMPONENT DATA (Bend, TIP= D09, Near= D09 N, Mid= D09 M, Far= D09 F):
    , Radius= 4.53 inch, Bend angle= 45.00 deg, Mid point at 50.00 percent, End flanges= 0, Flex= Auto,
```

BREAK IN DATA

CALCULATION SHEET

Project No. S54413.024	**Calculation No.** S54413.024-M-001	**Rev.** 0	**Page No.** 80 of 192
Title: LERF Basin 41 Buried Piping Analysis			
Prepared By: JD Williams	**Date:** 5/13/20	**Checked By:** JS Huisingh	**Date:** 5/13/20

```
-----------------------------------------------------------------------------------------------------------
LERF_FRP_3m
04/24/2020                                                          BENTLEY
12:36 PM                                                            AutoPIPE Advanced 11.01.00.24  MODEL  PAGE  86
-----------------------------------------------------------------------------------------------------------

                C O M P O N E N T   D A T A   L I S T I N G

 ---------------------------------------------------------------------------
 From AD08 to AD09, DX= 0.35 ft, DZ= 0.35 ft, L= 0.49 ft                    Flex

 COMPONENT DATA (Flex Jt):
   Length= 0.49 ft, Weight= 0 lb, Area= 0.0 sq.in, Kax= 300.0 lb/in, Kylat= 300.0 lb/in, Kzlat= 300.0 lb/in,
   Ktor= 300.0 ft-lb/deg, Kybend= 300.0 ft-lb/deg, Kzbend= 300.0 ft-lb/deg

 POINT DATA:
   AD08, Coordinates, X= 368.59 ft, Y= -1.53 ft, Z= 65.03 ft
   AD09, Coordinates, X= 368.94 ft, Y= -1.53 ft, Z= 65.38 ft

 SUPPORT DATA:
   AD09, Anchor, KTX= Rigid, KTY= Rigid, KTZ= Rigid, KRX= Rigid, KRY= Rigid, KRZ= Rigid

 ---------------------------------------------------------------------------


 Number of points in the system (Pipe + Frame + Soil): 577 + 118 + 848 = 1543


 Weight of Empty Pipes + Weight of Contents = Total Weight of System
        11794.9 lb     +     45249.0 lb     =       57043.9 lb
```

CALCULATION SHEET

Project No. S54413.024	**Calculation No.** S54413.024-M-001	**Rev.** 0	**Page No.** 81 of 192
Title: LERF Basin 41 Buried Piping Analysis			
Prepared By: JD Williams	**Date:** 5/13/20	**Checked By:** JS Huisingh	**Date:** 5/13/20

```
-----------------------------------------------------------------------------------------------------------
LERF_FRP_3m
04/24/2020                                                          BENTLEY
12:36 PM                                                            AutoPIPE Advanced 11.01.00.24  MODEL  PAGE  87
-----------------------------------------------------------------------------------------------------------

 C O O R D I N A T E S   D A T A   L I S T I N G

 POINT   --------COORDINATE (ft   )---------
 NAME         X           Y           Z
 -----   ----------- ----------- -----------
 *** SEGMENT A
 A00          -45.07       -0.28       -0.01
 A01          -35.07       -0.28       -0.01
 A02          -25.07       -0.28       -0.01
 A03          -15.07       -0.28       -0.01
 A04           -5.07       -0.28       -0.01
 A05           -0.41       -0.28       -0.01
 A06           -0.07       -0.28       -0.01
 A07            0.27       -0.28       -0.01
 A08            4.93       -0.28       -0.01
 A09           14.93       -0.28       -0.01
 A10           24.93       -0.28       -0.01
 A11           34.93       -0.28       -0.01
 A12           44.93       -0.28       -0.01

 *** SEGMENT B
 Q13            7.88       -0.28       39.56
 B01            7.55       -0.28       39.23
 B02            3.77       -0.28       35.44
 B03            0.14       -0.28       31.81
 B04 N          0.03       -0.28       31.70
 B04           -0.07       -0.28       31.60
 B04 M         -0.04       -0.28       31.59
 B04 F         -0.07       -0.28       31.47
 B05           -0.07       -0.28       31.30
 B06           -0.07       -0.28       24.99
 B07           -0.07       -0.28       14.99
 B08           -0.07       -0.28        4.99
 B09           -0.07       -0.28        0.33
 A06           -0.07       -0.28       -0.01

 *** SEGMENT C
 C00          -47.00        6.00        3.10
 C01          -37.00        6.00        3.10
 C02          -27.00        6.00        3.10
 C03          -17.00        6.00        3.10
 C04           -7.00        6.00        3.10
 C05           -2.34        6.00        3.10
 C06           -2.00        6.00        3.10
 C07           -1.66        6.00        3.10
 C08            3.00        6.00        3.10
 C09           13.00        6.00        3.10
 C10           23.00        6.00        3.10
 C11           33.00        6.00        3.10
 C12           43.00        6.00        3.10

 *** SEGMENT D
 D00            6.01       -0.28       41.63
 D01            5.17       -0.28       40.79
 D02            1.77       -0.28       37.39
 D03           -1.73       -0.28       33.89
 D04 N         -1.89       -0.28       33.73
```

CALCULATION SHEET

Project No. S54413.024	**Calculation No.** S54413.024-M-001	**Rev.** 0	**Page No.** 82 of 192
Title: LERF Basin 41 Buried Piping Analysis			
Prepared By: JD Williams	**Date:** 5/13/20	**Checked By:** JS Huisingh	**Date:** 5/13/20

```
-----------------------------------------------------------------------------------------------------------
LERF_FRP_3m
04/24/2020                                                          BENTLEY
12:36 PM                                                            AutoPIPE Advanced 11.01.00.24  MODEL  PAGE  88
-----------------------------------------------------------------------------------------------------------

 C O O R D I N A T E S   D A T A   L I S T I N G

 POINT   --------COORDINATE (ft   )---------
 NAME         X           Y           Z
 -----   ----------- ----------- -----------
 D04           -2.00       -0.28       33.62
 D04 M         -1.97       -0.28       33.61
 D04 F         -2.00       -0.28       33.47
 D05           -2.00       -0.28       33.24
 D06           -2.00       -0.28       26.30
 D07           -2.00       -0.28       16.30
 D08           -2.00       -0.28        9.76
 D09 N         -2.00       -0.28        9.54
 D09           -2.00       -0.28        9.38
 D09 M         -2.00       -0.25        9.40
 D09 F         -2.00       -0.17        9.27
 D10           -2.00       -0.01        9.11
 D11           -2.00        5.76        3.34
 C06           -2.00        6.00        3.10

 *** SEGMENT E
 E00          -45.07       -0.28       -0.01
 E01          -35.07       -0.28       -0.01
 E02          -25.07       -0.28       -0.01
 E03          -15.07       -0.28       -0.01
 E04           -5.07       -0.28       -0.01
 E05           -0.69       -0.28       -0.01
 E06           -0.41       -0.28       -0.01
 E07           -0.07       -0.28       -0.01
 E08            0.27       -0.28       -0.01
 E09            0.55       -0.28       -0.01
 E10            4.93       -0.28       -0.01
 E11           14.93       -0.28       -0.01
 E12           24.93       -0.28       -0.01
 E13           34.93       -0.28       -0.01
 E14           44.93       -0.28       -0.01

 *** SEGMENT F
 E07           -0.07       -0.28       -0.01
 F01           -0.07       -0.28        0.33
 F02           -0.07       -0.28        0.61
 F03           -0.07       -0.28        4.99
 F10           -0.07       -0.28       14.99
 F11           -0.07       -0.28       24.99
 F13           -0.07       -0.28       30.14
 F04           -0.07       -0.28       31.14
 F05           -0.07       -0.28       31.30
 F06 N         -0.07       -0.28       31.40
 F06           -0.07       -0.28       31.60
 F06 M         -0.03       -0.28       31.59
 F06 F          0.08       -0.28       31.75
 F07            0.14       -0.28       31.81
 F08            0.25       -0.28       31.92
 F14            3.77       -0.28       35.44
 F12            5.73       -0.28       37.40
 F09            7.49       -0.28       39.17
```

CALCULATION SHEET

Project No. S54413.024	**Calculation No.** S54413.024-M-001	**Rev.** 0	**Page No.** 83 of 192
Title: LERF Basin 41 Buried Piping Analysis			
Prepared By: JD Williams	**Date:** 5/13/20	**Checked By:** JS Huisingh	**Date:** 5/13/20

```
-----------------------------------------------------------------------------------------------------------
LERF_FRP_3m
04/24/2020                                                          BENTLEY
12:36 PM                                                            AutoPIPE Advanced 11.01.00.24  MODEL  PAGE  89
-----------------------------------------------------------------------------------------------------------

 C O O R D I N A T E S   D A T A   L I S T I N G

 POINT   --------COORDINATE (ft   )---------
 NAME         X           Y           Z
 -----   ----------- ----------- -----------
 *** SEGMENT G
 G00          -47.00        6.00        3.10
 G01          -37.00        6.00        3.10
 G02          -27.00        6.00        3.10
 G03          -17.00        6.00        3.10
 G04           -7.00        6.00        3.10
 G05           -2.62        6.00        3.10
 G06           -2.34        6.00        3.10
 G07           -2.00        6.00        3.10
 G08           -1.66        6.00        3.10
 G09           -1.38        6.00        3.10
 G10            3.00        6.00        3.10
 G11           13.00        6.00        3.10
 G12           23.00        6.00        3.10
 G13           33.00        6.00        3.10
 G14           43.00        6.00        3.10

 *** SEGMENT H
 H00            5.16       -0.28       40.77
 H01            3.79       -0.28       39.41
 H02            1.77       -0.28       37.38
 H03           -1.62       -0.28       33.99
 H04           -1.73       -0.28       33.88
 H05 N         -1.81       -0.28       33.80
 H05           -2.00       -0.28       33.61
 H05 M         -1.95       -0.28       33.59
 H05 F         -2.00       -0.28       33.35
 H06           -2.00       -0.28       33.23
 H07           -2.00       -0.28       33.07
 H08           -2.00       -0.28       32.07
 H09           -2.00       -0.28       26.30
 H10           -2.00       -0.28       16.30
 H11           -2.00       -0.28        9.92
 H12           -2.00       -0.28        9.76
 H13 N         -2.00       -0.28        9.65
 H13           -2.00       -0.28        9.38
 H13 M         -2.00       -0.23        9.41
 H13 F         -2.00       -0.09        9.20
 H14           -2.00       -0.01        9.11
 H15           -2.00        0.10        9.00
 H16           -2.00        5.56        3.54
 H17           -2.00        5.76        3.34
 G07           -2.00        6.00        3.10

 *** SEGMENT P
 P00           34.17       -0.75       69.79
 P01 N         32.93       -0.29       68.55
 P01           32.90       -0.28       68.52
 P01 F         32.87       -0.28       68.49
 P03           32.32       -0.28       67.94
 P04           31.69       -0.28       67.31
 P05           30.75       -0.28       66.38
```

CALCULATION SHEET

Project No. S54413.024	**Calculation No.** S54413.024-M-001	**Rev.** 0	**Page No.** 84 of 192
Title: LERF Basin 41 Buried Piping Analysis			
Prepared By: JD Williams	**Date:** 5/13/20	**Checked By:** JS Huisingh	**Date:** 5/13/20

```
LERF_FRP_3m
04/24/2020                                                    BENTLEY
12:36 PM                                                      AutoPIPE Advanced 11.01.00.24  MODEL  PAGE  90
```

C O O R D I N A T E S D A T A L I S T I N G

POINT NAME	COORDINATE (ft) X	Y	Z
P06	27.45	-0.28	63.08
P07	17.81	-0.28	53.43
P08	7.90	-0.28	43.52
P09	7.63	-0.28	43.25
P10	7.05	-0.28	42.67
P11	6.57	-0.28	42.19
P11 M	6.31	-0.28	41.93
P12	6.04	-0.28	41.66
D00	6.01	-0.28	41.63
*** SEGMENT Q			
Q00	36.05	-0.74	67.72
Q01 N	34.84	-0.29	66.51
Q01	34.82	-0.28	66.49
Q01 F	34.79	-0.28	66.47
Q03	34.26	-0.28	65.94
Q04	33.73	-0.28	65.41
Q05	33.09	-0.28	64.77
Q06	30.62	-0.28	62.29
Q07	20.31	-0.28	51.98
Q08	9.67	-0.28	41.35
Q09	9.42	-0.28	41.09
Q10	8.95	-0.28	40.62
Q11	8.39	-0.28	40.06
Q11 M	8.15	-0.28	39.82
Q12	7.91	-0.28	39.59
Q13	7.88	-0.28	39.56
*** SEGMENT R			
R00	38.94	-1.02	65.05
R01 N	37.00	-0.29	63.10
R01	36.97	-0.28	63.07
R01 F	36.93	-0.28	63.04
R03	36.39	-0.28	62.49
R04	35.76	-0.28	61.86
R05	34.82	-0.28	60.92
R06	31.52	-0.28	57.62
R07	22.56	-0.28	48.67
R08	16.02	-0.28	42.12
R08 M	15.75	-0.28	41.86
R10	15.49	-0.28	41.59
R11	13.01	-0.28	39.12
R12	12.74	-0.28	38.85
R13	12.13	-0.28	38.23
R14	11.68	-0.28	37.79
R14 M	11.47	-0.28	37.58
R15	11.26	-0.28	37.37
R16	11.26	-0.28	37.36
R17	11.25	-0.28	37.36
R17 M	11.01	-0.28	37.11
R18	10.77	-0.28	

BREAK IN DATA

CALCULATION SHEET

Project No. S54413.024	**Calculation No.** S54413.024-M-001	**Rev.** 0	**Page No.** 85 of 192
Title: LERF Basin 41 Buried Piping Analysis			
Prepared By: JD Williams	**Date:** 5/13/20	**Checked By:** JS Huisingh	**Date:** 5/13/20

```
LERF_FRP_3m
04/24/2020                                                    BENTLEY
12:36 PM                                                      AutoPIPE Advanced 11.01.00.24  MODEL  PAGE 100
-------------------------------------------------------------------------------------------------------------

                    P I P E   D A T A   L I S T I N G

 Pipe ID/     Nom/ I.D.  -----Thickness(inch)----- Spec  InsuDen/   Weight(lb/ft )    ZL/ Composition/
 Material     Sch  inch  W.Th. Corr Mill Insu Ling Grav/ LingDen/  Pipe/ Ling/ Total  ZC
 CladMaterial            Clad                      InsMt CladDen   Cont  Insu/
 ---Line Class---                                        lb/cu.ft        Clad
 ------------ ---- ----- ----- ---- ---- ---- ---- ----- --------  ----- ----- ----- ---- --------------------

 Tag No. : <None>
 3CON40      3.000 3.120 0.135    0      2.00    0  1.50    6.000   1.11     0  7.49 1.00
 NS           NS                                   Other    0.000   4.97  1.41       1.00
                             0                              0.000            0


 Tag No. : <None>
 4CON40          4  4.120 0.160    0      2.00    0  1.50    6.000   1.73     0 12.08 1.00
 NS           NS                                   Other    0.000   8.67  1.69       1.00
                             0                              0.000            0


 Tag No. : <None>
 6CON30          6  6.120 0.110    0      2.00    0  1.50    6.000   1.73     0 23.04 1.00
 NS           NS                                   Other    0.000  19.12  2.18       1.00
                             0                              0.000            0


 Tag No. : <None>
 8CON30          8  8.120 0.110    0      2.00    0  1.50    6.000   2.29     0 38.65 1.00
 NS           NS                                   Other    0.000  33.66  2.71       1.00
                             0                              0.000            0


 Tag No. : <None>
 FITT3       3.000 3.120 0.295    0      2.00    0  1.50    6.000   2.55     0  9.01 1.00
 NS           NS                                   Other    0.000   4.97  1.49       1.00
                             0                              0.000            0


 Tag No. : <None>
 FITT6           6  6.120 0.410    0      2.00    0  1.50    6.000   6.76     0 28.23 1.00
 NS           NS                                   Other    0.000  19.12  2.34       1.00
                             0                              0.000            0


 Tag No. : <None>
 FITT8           8  8.120 0.410    0      2.00    0  1.50    6.000   8.84     0 45.36 1.00
 NS           NS                                   Other    0.000  33.66  2.86       1.00
                             0                              0.000            0
```

CALCULATION SHEET

Project No. S54413.024	**Calculation No.** S54413.024-M-001	**Rev.** 0	**Page No.** 86 of 192
Title: LERF Basin 41 Buried Piping Analysis			
Prepared By: JD Williams	**Date:** 5/13/20	**Checked By:** JS Huisingh	**Date:** 5/13/20

```
-----------------------------------------------------------------------------------------------------------------
LERF_FRP_3m
04/24/2020                                                          BENTLEY
12:36 PM                                                            AutoPIPE Advanced 11.01.00.24  MODEL  PAGE 101
-----------------------------------------------------------------------------------------------------------------

                    P I P E   D A T A   L I S T I N G

 Pipe ID/     Nom/ I.D.  -----Thickness(inch)----- Spec  InsuDen/   Weight(lb/ft )    ZL/ Composition/
 Material     Sch  inch  W.Th. Corr Mill Insu Ling Grav/ LingDen/  Pipe/ Ling/ Total  ZC
 CladMaterial            Clad                      InsMt CladDen   Cont  Insu/
 ---Line Class---                                        lb/cu.ft        Clad
 ------------ ---- ----- ----- ---- ---- ---- ---- ----- --------  ----- ----- ----- ---- --------------------
 Tag No. : <None>
 FITT4          4  4.120 0.295    0      2.00    0  1.50    6.000   3.29     0 13.71 1.00
 NS           NS                                  Other    0.000   8.67  1.76       1.00
                             0                             0.000            0


 Tag No. : <None>
 3INSCH40     3.000 3.068 0.208 0.01      1.00    0  1.50    3.500   7.75     0 12.90 1.00
 NS           NS                                  Other    0.000   4.81  0.34       1.00
                             0                             0.000            0


 Tag No. : <None>
 4INSCH40       4  4.026 0.229 0.01      1.00    0  1.50    3.500  11.04     0 19.74 1.00
 NS           NS                                  Other    0.000   8.27  0.42       1.00
                             0                             0.000            0


 Tag No. : <None>
 8INSCH40       8  7.981 0.322 0.01      1.00    0  1.50    3.500  29.98     0 63.23 1.00
 NS           NS                                  Other    0.000  32.52  0.74       1.00
                             0                             0.000            0


 Tag No. : <None>
 12BOND        12 12.450 0.179    0      2.00    0  1.50    6.000   5.71     0 88.72 1.00
 NS           NS                                  Other    0.000  79.13  3.88       1.00
                             0                             0.000            0
```

CALCULATION SHEET

Project No. S54413.024	**Calculation No.** S54413.024-M-001	**Rev.** 0	**Page No.** 87 of 192
Title: LERF Basin 41 Buried Piping Analysis			
Prepared By: JD Williams	**Date:** 5/13/20	**Checked By:** JS Huisingh	**Date:** 5/13/20

```
-----------------------------------------------------------------------------------------------------------------
LERF_FRP_3m
04/24/2020                                                          BENTLEY
12:36 PM                                                            AutoPIPE Advanced 11.01.00.24  MODEL  PAGE 102
-----------------------------------------------------------------------------------------------------------------
```

M A T E R I A L D A T A L I S T I N G

Material Name	Pipe ID	Density lb/cu.ft	A2. fac	A3. fac	Temp. deg F	Expans. in/100ft	Long. Mod. E6 psi	Temp. A1-fac	K-fac	Poisson Ea/Eh*Vh/a
NS	3CON40	115.800	1.0	1.0	60.0	0.0	1.7500			0.23
					120.0	0.7	1.6300	1.00	0.85	0.23
					32.0	-0.5	1.8600	1.00	0.85	0.23
					150.0	1.0	1.5600	1.00	0.85	0.23
					-25.0	-1.2	2.0100	1.00	0.85	0.23
NS	FITT3	115.800	1.0	1.0	60.0	0.0	1.7500			0.23
					120.0	0.7	1.6300	1.00	0.85	0.23
					32.0	-0.5	1.8600	1.00	0.85	0.23
					150.0	1.0	1.5600	1.00	0.85	0.23
					-25.0	-1.2	2.0100	1.00	0.85	0.23
NS	4CON40	115.800	1.0	1.0	60.0	0.0	1.7500			0.23
					120.0	0.7	1.6300	1.00	0.85	0.23
					32.0	-0.5	1.8600	1.00	0.85	0.23
					150.0	1.0	1.5600	1.00	0.85	0.23
					-25.0	-1.2	2.0100	1.00	0.85	0.23
NS	FITT4	115.800	1.0	1.0	60.0	0.0	1.7500			0.23
					120.0	0.7	1.6300	1.00	0.85	0.23
					32.0	-0.5	1.8600	1.00	0.85	0.23
					150.0	1.0	1.5600	1.00	0.85	0.23
					-25.0	-1.2	2.0100	1.00	0.85	0.23
NS	6CON30	115.800	1.0	1.0	60.0	0.0	1.7500			0.23
					100.0	0.5	1.6900	1.00	0.85	0.23
					32.0	-0.5	1.8600	1.00	0.85	0.23
					150.0	1.0	1.5600	1.00	0.85	0.23
					-25.0	-1.2	2.0100	1.00	0.85	0.23
					120.0	0.7	1.6300	1.00	0.85	0.23
NS	FITT6	115.800	1.0	1.0	60.0	0.0	1.7500			0.23
					100.0	0.5	1.6900	1.00	0.85	0.23
					32.0	-0.5	1.8600	1.00	0.85	0.23
					150.0	1.0	1.5600	1.00	0.85	0.23
					-25.0	-1.2	2.0100	1.00	0.85	0.23
NS	8CON30	115.800	1.0	1.0	60.0	0.0	1.7500			0.23
					100.0	0.5	1.6900	1.00	0.85	0.23
					32.0	-0.5	1.8600	1.00	0.85	0.23
					150.0	1.0	1.5600	1.00	0.85	0.23
					-25.0	-1.2	2.0100	1.00	0.85	0.23
					120.0	0.7	1.6300	1.00	0.85	0.23
NS	FITT8	115.800	1.0	1.0	60.0	0.0	1.7500			0.23
					100.0	0.5	1.6900	1.00	0.85	0.23
					32.0	-0.5	1.8600	1.00	0.85	0.23
					150.0	1.0	1.5600	1.00	0.85	0.23
					-25.0	-1.2	2.0100	1.00	0.85	0.23
					120.0	0.7	1.6300	1.00	0.85	0.23

CALCULATION SHEET

Project No. S54413.024	**Calculation No.** S54413.024-M-001	**Rev.** 0	**Page No.** 88 of 192
Title: LERF Basin 41 Buried Piping Analysis			
Prepared By: JD Williams	**Date:** 5/13/20	**Checked By:** JS Huisingh	**Date:** 5/13/20

```
-----------------------------------------------------------------------------------------------------------------
LERF_FRP_3m
04/24/2020                                                          BENTLEY
12:36 PM                                                            AutoPIPE Advanced 11.01.00.24  MODEL  PAGE 103
-----------------------------------------------------------------------------------------------------------------
```

M A T E R I A L D A T A L I S T I N G

Material Name	Pipe ID	Density lb/cu.ft	A2. fac	A3. fac	Temp. deg F	Expans. in/100ft	Long. Mod. E6 psi	Temp. A1-fac	K-fac	Poisson Ea/Eh*Vh/a
NS	4INSCH40	501.000	1.0	1.0	60.0	0.0	28.3408			0.30
					150.0	1.0	27.8700	16.70	0.85	0.30
					-25.0	-1.1	28.6900	16.70	0.85	0.30
					120.0	0.6	28.0300	1.00	0.85	0.30
NS	3INSCH40	501.000	1.0	1.0	60.0	0.0	28.3408			0.30
					150.0	1.0	27.8700	16.70	0.85	0.30
					-25.0	-1.1	28.6900	16.70	0.85	0.30
					120.0	0.6	28.0300	1.00	0.85	0.30
NS	12BOND	115.800	1.0	1.0	60.0	0.0	1.7500			0.23
					150.0	1.0	1.5600	1.00	0.85	0.23
					-25.0	-1.2	2.0100	1.00	0.85	0.23
					120.0	0.7	1.6300	1.00	0.85	0.23

CALCULATION SHEET

Project No. S54413.024	**Calculation No.** S54413.024-M-001	**Rev.** 0	**Page No.** 89 of 192
Title: LERF Basin 41 Buried Piping Analysis			
Prepared By: JD Williams	**Date:** 5/13/20	**Checked By:** JS Huisingh	**Date:** 5/13/20

```
-----------------------------------------------------------------------------------------------------------------
LERF_FRP_3m
04/24/2020                                                                  BENTLEY
12:36 PM                                                                    AutoPIPE Advanced 11.01.00.24  MODEL  PAGE 104
-----------------------------------------------------------------------------------------------------------------
```

M A T E R I A L A L L O W A B L E D A T A L I S T I N G

Material Name	Pipe ID	Temper. deg F	al(0:1) psi	al(2:1) psi	hl(2:1)=Qs psi	al(1:1) psi	hl(1:1) psi
NS	3CON40	60.0	6454.0	7272.0	12571.0	0.0	0.0
		120.0					
		32.0					
		150.0					
		-25.0					
NS	FITT3	60.0	6454.0	7272.0	12571.0	0.0	0.0
		120.0					
		32.0					
		150.0					
		-25.0					
NS	4CON40	60.0	6454.0	7272.0	12571.0	0.0	0.0
		120.0					
		32.0					
		150.0					
		-25.0					
NS	FITT4	60.0	6454.0	7272.0	12571.0	0.0	0.0
		120.0					
		32.0					
		150.0					
		-25.0					
NS	6CON30	60.0	6454.0	7272.0	12571.0	0.0	0.0
		100.0					
		32.0					
		150.0					
		-25.0					
		120.0					
NS	FITT6	60.0	6454.0	7272.0	12571.0	0.0	0.0
		100.0					
		32.0					
		150.0					
		-25.0					
NS	8CON30	60.0	6454.0	7272.0	12571.0	0.0	0.0
		100.0					
		32.0					
		150.0					
		-25.0					
		120.0					
NS	FITT8	60.0	6454.0	7272.0	12571.0	0.0	0.0
		100.0					
		32.0					
		150.0					
		-25.0					
		120.0					

CALCULATION SHEET

Project No. S54413.024	**Calculation No.** S54413.024-M-001	**Rev.** 0	**Page No.** 90 of 192
Title: LERF Basin 41 Buried Piping Analysis			
Prepared By: JD Williams	**Date:** 5/13/20	**Checked By:** JS Huisingh	**Date:** 5/13/20

```
-----------------------------------------------------------------------------------------------------------------
LERF_FRP_3m
04/24/2020                                                                BENTLEY
12:36 PM                                                                  AutoPIPE Advanced 11.01.00.24  MODEL  PAGE 105
-----------------------------------------------------------------------------------------------------------------

        M A T E R I A L   A L L O W A B L E   D A T A   L I S T I N G

  Material            Temper.  al(0:1)  al(2:1)  hl(2:1)=Qs  al(1:1)  hl(1:1)
    Name     Pipe ID   deg F    psi      psi      psi         psi      psi
 ----------- -------- -------  -------  -------  ----------  -------  -------
 NS          4INSCH40    60.0  16700.0  16700.0     16700.0      0.0      0.0
                        150.0
                        -25.0
                        120.0

 NS          3INSCH40    60.0  16700.0  16700.0     16700.0      0.0      0.0
                        150.0
                        -25.0
                        120.0

 NS          12BOND      60.0   6454.0   7272.0     12571.0      0.0      0.0
                        150.0
                        -25.0
                        120.0
```

CALCULATION SHEET

Project No. S54413.024	**Calculation No.** S54413.024-M-001	**Rev.** 0	**Page No.** 91 of 192
Title: LERF Basin 41 Buried Piping Analysis			
Prepared By: JD Williams	**Date:** 5/13/20	**Checked By:** JS Huisingh	**Date:** 5/13/20

```
-----------------------------------------------------------------------------------------------------------------
LERF_FRP_3m
04/24/2020                                                                  BENTLEY
12:36 PM                                                                    AutoPIPE Advanced 11.01.00.24  MODEL  PAGE 106
-----------------------------------------------------------------------------------------------------------------

        OPERATING TEMPERATURE AND PRESSURE DATA
                    STRESSES IN psi

 POINT       PRESS. TEMPER  EXPAN.      MODULUS                          HOT
 NAME  CASE  psi    deg F   in/100ft    E6 psi     A1-FAC     K-FAC     Va/h
 ----  ----  ------ ------  --------    -------    ------     -----     -----

 *** SEGMENT A
 A00   T1       150    120     0.684*     1.630*     1.00      0.85      0.23*
                               0.420p
       T2         0  32.00    -0.547*     1.860*     1.00      0.85      0.23*
                               0.000p
       T3       150    120     0.684*     1.630*     1.00      0.85      0.23*
                               0.420p
 A05   T1       150    120     0.684*     1.630*     1.00      0.85      0.23*
                               0.202p
       T2         0  32.00    -0.547*     1.860*     1.00      0.85      0.23*
                               0.000p
       T3       150    120     0.684*     1.630*     1.00      0.85      0.23*
                               0.202p
 A07   T1       150    120     0.684*     1.630*     1.00      0.85      0.23*
                               0.420p
       T2         0  32.00    -0.547*     1.860*     1.00      0.85      0.23*
                               0.000p
       T3       150    120     0.684*     1.630*     1.00      0.85      0.23*
                               0.420p
 A12    Same as previous point.

 *** SEGMENT B
 Q13   T1       150    150     1.026*     1.560*     1.00      0.85      0.23*
                               0.420p
       T2         0 -25.00    -1.197*     2.010*     1.00      0.85      0.23*
                               0.000p
       T3       150    120     0.684*     1.630*     1.00      0.85      0.23*
                               0.420p
 B03   T1       150    150     1.026*     1.560*     1.00      0.85      0.23*
                               0.202p
       T2         0 -25.00    -1.197*     2.010*     1.00      0.85      0.23*
                               0.000p
       T3       150    120     0.684*     1.630*     1.00      0.85      0.23*
                               0.202p
 B05   T1       150    150     1.026*     1.560*     1.00      0.85      0.23*
                               0.420p
       T2         0 -25.00    -1.197*     2.010*     1.00      0.85      0.23*
                               0.000p
       T3       150    120     0.684*     1.630*     1.00      0.85      0.23*
                               0.420p
 B07   T1       150    120     0.684*     1.630*     1.00      0.85      0.23*
                               0.420p
       T2         0  32.00    -0.547*     1.860*     1.00      0.85      0.23*
                               0.000p
       T3       150    120     0.684*     1.630*     1.00      0.85      0.23*
                               0.420p
 B09   T1       150    120     0.684*     1.630*     1.00      0.85      0.23*
                               0.202p
       T2         0  32.00    -0.547*     1.860*     1.00      0.85      0.23*
                               0.000p
       T3       150    120     0.684*     1.630*     1.00      0.85      0.23*
```

CALCULATION SHEET

Project No. S54413.024	**Calculation No.** S54413.024-M-001	**Rev.** 0	**Page No.** 92 of 192
Title: LERF Basin 41 Buried Piping Analysis			
Prepared By: JD Williams	**Date:** 5/13/20	**Checked By:** JS Huisingh	**Date:** 5/13/20

```
---------------------------------------------------------------------------------------------------------------
LERF_FRP_3m
04/24/2020                                                                  BENTLEY
12:36 PM                                                                    AutoPIPE Advanced 11.01.00.24  MODEL  PAGE 107
---------------------------------------------------------------------------------------------------------------

        OPERATING TEMPERATURE AND PRESSURE DATA
                    STRESSES IN psi

 POINT       PRESS. TEMPER  EXPAN.      MODULUS                          HOT
 NAME  CASE  psi    deg F   in/100ft    E6 psi     A1-FAC     K-FAC     Va/h
 ----  ----  ------ ------  --------    -------    ------     -----     -----
                                0.202p
 A06    Same as previous point.

 *** SEGMENT C
 C00   T1       150    120     0.684*     1.630*     1.00      0.85      0.23*
                                0.466p
       T2         0  32.00    -0.547*     1.860*     1.00      0.85      0.23*
                                0.000p
       T3       150    120     0.684*     1.630*     1.00      0.85      0.23*
                                0.466p
 C05   T1       150    120     0.684*     1.630*     1.00      0.85      0.23*
                                0.261p
       T2         0  32.00    -0.547*     1.860*     1.00      0.85      0.23*
                                0.000p
       T3       150    120     0.684*     1.630*     1.00      0.85      0.23*
                                0.261p
 C07   T1       150    120     0.684*     1.630*     1.00      0.85      0.23*
                                0.466p
       T2         0  32.00    -0.547*     1.860*     1.00      0.85      0.23*
                                0.000p
       T3       150    120     0.684*     1.630*     1.00      0.85      0.23*
                                0.466p
 C12    Same as previous point.

 *** SEGMENT D
 D00   T1       150    150     1.026*     1.560*     1.00      0.85      0.23*
                                0.466p
       T2         0 -25.00    -1.197*     2.010*     1.00      0.85      0.23*
                                0.000p
       T3       150    120     0.684*     1.630*     1.00      0.85      0.23*
                                0.466p
 D03   T1       150    150     1.026*     1.560*     1.00      0.85      0.23*
                                0.261p
       T2         0 -25.00    -1.197*     2.010*     1.00      0.85      0.23*
                                0.000p
       T3       150    120     0.684*     1.630*     1.00      0.85      0.23*
                                0.261p
 D05   T1       150    150     1.026*     1.560*     1.00      0.85      0.23*
                                0.466p
       T2         0 -25.00    -1.197*     2.010*     1.00      0.85      0.23*
                                0.000p
       T3       150    120     0.684*     1.630*     1.00      0.85      0.23*
                                0.466p
 D07   T1       150    120     0.684*     1.630*     1.00      0.85      0.23*
                                0.466p
       T2         0  32.00    -0.547*     1.860*     1.00      0.85      0.23*
                                0.000p
       T3       150    120     0.684*     1.630*     1.00      0.85      0.23*
                                0.466p
 D08   T1       150    120     0.684*     1.630*     1.00      0.85      0.23*
                                0.2
       T2         0  32.00    -0.5
                                0.000p
---------------------------------------------------------------------------------------------------------------
```

BREAK IN DATA

CALCULATION SHEET

Project No. S54413.024	**Calculation No.** S54413.024-M-001	**Rev.** 0	**Page No.** 93 of 192
Title: LERF Basin 41 Buried Piping Analysis			
Prepared By: JD Williams	**Date:** 5/13/20	**Checked By:** JS Huisingh	**Date:** 5/13/20

```
LERF_FRP_3m
04/24/2020                                                    BENTLEY
12:36 PM                                                      AutoPIPE Advanced 11.01.00.24  MODEL  PAGE 120
-------------------------------------------------------------------------------------------------------------
```

SOIL DATA LISTING

SOIL STIFFNESS PROPERTIES (6"SOIL)

Dirn	Auto	Initial K (lb/in/ft)	Auto	Yield P (lb/ft)	Final K (lb/in/ft)	Yield disp (in)
Low Stiffness						
Horiz.	N	3116.494	N	2917.039	0.100	0.9360
Long.	N	1363.759	N	272.752	0.100	0.2000
Vert. Up	N	2731.644	N	1704.545	0.100	0.6240
Vert. Dn	N	8060.909	N	5030.007	0.100	0.6240
High Stiffness						
Horiz.	N	3116.494	N	2917.039	0.100	0.9360
Long.	N	1363.759	N	272.752	0.100	0.2000
Vert. Up	N	2731.644	N	1704.545	0.100	0.6240
Vert. Dn	N	8060.909	N	5030.007	0.100	0.6240
Average Stiffness						
Horiz.	N	12540.000	N	10001.000	0.100	0.7975
Long.	N	4901.000	N	490.000	0.100	0.1000
Vert. Up	N	12216.000	N	7794.000	0.100	0.6380
Vert. Dn	N	27315.000	N	34854.000	0.100	1.2760

CALCULATION SHEET

Project No. S54413.024	**Calculation No.** S54413.024-M-001	**Rev.** 0	**Page No.** 94 of 192
Title: LERF Basin 41 Buried Piping Analysis			
Prepared By: JD Williams	**Date:** 5/13/20	**Checked By:** JS Huisingh	**Date:** 5/13/20

```
-----------------------------------------------------------------------------------------------------------
LERF_FRP_3m
04/24/2020                                                          BENTLEY
12:36 PM                                                            AutoPIPE Advanced 11.01.00.24  MODEL  PAGE 121
-----------------------------------------------------------------------------------------------------------


                                SOIL PARAMETERS (6"SOIL)
                                ------------------------

  Calculation Method :  User

  Parameters                                          Low          High       Average
  ---------------------------------------------    ----------   ----------   ----------
  Outside Diameter, D [in]                              6.57
  Depth to Centerline, H [inch]                       105.94
```

CALCULATION SHEET

Project No. S54413.024	**Calculation No.** S54413.024-M-001	**Rev.** 0	**Page No.** 95 of 192
Title: LERF Basin 41 Buried Piping Analysis			
Prepared By: JD Williams	**Date:** 5/13/20	**Checked By:** JS Huisingh	**Date:** 5/13/20

```
-----------------------------------------------------------------------------------------------------------
LERF_FRP_3m
04/24/2020                                                          BENTLEY
12:36 PM                                                            AutoPIPE Advanced 11.01.00.24  MODEL  PAGE 122
-----------------------------------------------------------------------------------------------------------


                              VIRTUAL ANCHOR DATA (6"SOIL)
                              ----------------------------

  Pipe Identifier            :   6CON30
  Point name for temp. data  :   A03
  Operating Case             :   OP1
  Thermal Expansion          :       0.684 in/100ft
  Temperature Change         :      60.000 deg F
  Operating Pressure         :     150.000 psi
  Virtual Anchor lengths  Lm :      22.624 ft
                          La :      45.248 ft
                          Lb :       5.220 ft
```

CALCULATION SHEET

Project No. S54413.024	**Calculation No.** S54413.024-M-001	**Rev.** 0	**Page No.** 96 of 192
Title: LERF Basin 41 Buried Piping Analysis			
Prepared By: JD Williams	**Date:** 5/13/20	**Checked By:** JS Huisingh	**Date:** 5/13/20

```
-----------------------------------------------------------------------------------------------------------------
LERF_FRP_3m
04/24/2020                                                                  BENTLEY
12:36 PM                                                                    AutoPIPE Advanced 11.01.00.24  MODEL  PAGE 123
-----------------------------------------------------------------------------------------------------------------
```

SOIL STIFFNESS PROPERTIES (8USOIL)

Dirn	Auto	Initial K (lb/in/ft)	Auto	Yield P (lb/ft)	Final K (lb/in/ft)	Yield disp (in)
Low Stiffness						
Horiz.	N	5770.000	N	6044.000	0.100	1.0475
Long.	N	2742.000	N	274.000	0.100	0.0999
Vert. Up	N	2089.000	N	1414.000	0.100	0.6769
Vert. Dn	N	12825.000	N	21495.000	0.100	1.6760
High Stiffness						
Horiz.	N	3502.522	N	1702.226	0.100	0.4860
Long.	N	708.106	N	141.621	0.100	0.2000
Vert. Up	N	5260.942	N	1704.545	0.100	0.3240
Vert. Dn	N	7871.595	N	2550.397	0.100	0.3240
Average Stiffness						
Horiz.	N	3502.522	N	1702.226	0.100	0.4860
Long.	N	708.106	N	141.621	0.100	0.2000
Vert. Up	N	5260.942	N	1704.545	0.100	0.3240
Vert. Dn	N	7871.595	N	2550.397	0.100	0.3240

CALCULATION SHEET

Project No. S54413.024	**Calculation No.** S54413.024-M-001	**Rev.** 0	**Page No.** 97 of 192
Title: LERF Basin 41 Buried Piping Analysis			
Prepared By: JD Williams	**Date:** 5/13/20	**Checked By:** JS Huisingh	**Date:** 5/13/20

```
-----------------------------------------------------------------------------------------------------------
LERF_FRP_3m
04/24/2020                                                          BENTLEY
12:36 PM                                                            AutoPIPE Advanced 11.01.00.24  MODEL  PAGE 124
-----------------------------------------------------------------------------------------------------------


                                SOIL PARAMETERS (8USOIL)
                                ------------------------

  Calculation Method :  User

  Parameters                                          Low          High       Average
  ----------------------------------------------    ----------   ----------   ----------
  Outside Diameter, D [in]                               8.60
  Depth to Centerline, H [inch]                        105.94
```

CALCULATION SHEET

Project No. S54413.024	**Calculation No.** S54413.024-M-001	**Rev.** 0	**Page No.** 98 of 192
Title: LERF Basin 41 Buried Piping Analysis			
Prepared By: JD Williams	**Date:** 5/13/20	**Checked By:** JS Huisingh	**Date:** 5/13/20

```
-----------------------------------------------------------------------------------------------------------
LERF_FRP_3m
04/24/2020                                                          BENTLEY
12:36 PM                                                            AutoPIPE Advanced 11.01.00.24  MODEL  PAGE 125
-----------------------------------------------------------------------------------------------------------


                                VIRTUAL ANCHOR DATA (8USOIL)
                                ----------------------------

  Pipe Identifier            :   3CON40
  Point name for temp. data  :   A06
  Operating Case             :   OP1
  Thermal Expansion          :       0.684 in/100ft
  Temperature Change         :      60.000 deg F
  Operating Pressure         :     150.000 psi
  Virtual Anchor lengths  Lm :      11.010 ft
                          La :      22.019 ft
                          Lb :       3.060 ft
```

CALCULATION SHEET

Project No. S54413.024	**Calculation No.** S54413.024-M-001	**Rev.** 0	**Page No.** 99 of 192
Title: LERF Basin 41 Buried Piping Analysis			
Prepared By: JD Williams	**Date:** 5/13/20	**Checked By:** JS Huisingh	**Date:** 5/13/20

```
-----------------------------------------------------------------------------------------------------------
LERF_FRP_3m
04/24/2020                                                          BENTLEY
12:36 PM                                                            AutoPIPE Advanced 11.01.00.24  MODEL  PAGE 126
-----------------------------------------------------------------------------------------------------------
```

SOIL STIFFNESS PROPERTIES (8LSOIL)

Dirn	Auto	Initial K (lb/in/ft)	Auto	Yield P (lb/ft)	Final K (lb/in/ft)	Yield disp (in)
Low Stiffness						
Horiz.	N	17341.000	N	18165.000	0.100	1.0475
Long.	N	6437.000	N	644.000	0.100	0.1000
Vert. Up	N	9301.000	N	7794.000	0.100	0.8380
Vert. Dn	N	27735.000	N	46484.000	0.100	1.6760
High Stiffness						
Horiz.	N	3502.522	N	1702.226	0.100	0.4860
Long.	N	708.106	N	141.621	0.100	0.2000
Vert. Up	N	5260.942	N	1704.545	0.100	0.3240
Vert. Dn	N	7871.595	N	2550.397	0.100	0.3240
Average Stiffness						
Horiz.	N	3502.522	N	1702.226	0.100	0.4860
Long.	N	708.106	N	141.621	0.100	0.2000
Vert. Up	N	5260.942	N	1704.545	0.100	0.3240
Vert. Dn	N	7871.595	N	2550.397	0.100	0.3240

CALCULATION SHEET

Project No. S54413.024	**Calculation No.** S54413.024-M-001	**Rev.** 0	**Page No.** 100 of 192
Title: LERF Basin 41 Buried Piping Analysis			
Prepared By: JD Williams	**Date:** 5/13/20	**Checked By:** JS Huisingh	**Date:** 5/13/20

```
-----------------------------------------------------------------------------------------------------------------
LERF_FRP_3m
04/24/2020                                                                BENTLEY
12:36 PM                                                                  AutoPIPE Advanced 11.01.00.24  MODEL  PAGE 127
-----------------------------------------------------------------------------------------------------------------


                                SOIL PARAMETERS (8LSOIL)
                                ------------------------

  Calculation Method :  User

  Parameters                                          Low          High       Average
  ----------------------------------------------    ----------   ----------   ----------
  Outside Diameter, D [in]                               8.60
  Depth to Centerline, H [inch]                         45.13
```

CALCULATION SHEET

Project No. S54413.024	**Calculation No.** S54413.024-M-001	**Rev.** 0	**Page No.** 101 of 192
Title: LERF Basin 41 Buried Piping Analysis			
Prepared By: JD Williams	**Date:** 5/13/20	**Checked By:** JS Huisingh	**Date:** 5/13/20

```
-----------------------------------------------------------------------------------------------------------
LERF_FRP_3m
04/24/2020                                                          BENTLEY
12:36 PM                                                            AutoPIPE Advanced 11.01.00.24  MODEL  PAGE 128
-----------------------------------------------------------------------------------------------------------


                              VIRTUAL ANCHOR DATA (8LSOIL)
                              ----------------------------

  Pipe Identifier            :   3CON40
  Point name for temp. data  :   A06
  Operating Case             :   OP1
  Thermal Expansion          :       0.684 in/100ft
  Temperature Change         :      60.000 deg F
  Operating Pressure         :     150.000 psi
  Virtual Anchor lengths  Lm :      11.010 ft
                          La :      22.019 ft
                          Lb :       3.060 ft
```

CALCULATION SHEET

Project No. S54413.024	**Calculation No.** S54413.024-M-001	**Rev.** 0	**Page No.** 102 of 192
Title: LERF Basin 41 Buried Piping Analysis			
Prepared By: JD Williams	**Date:** 5/13/20	**Checked By:** JS Huisingh	**Date:** 5/13/20

```
-----------------------------------------------------------------------------------------------------------
LERF_FRP_3m
04/24/2020                                                    BENTLEY
12:36 PM                                                      AutoPIPE Advanced 11.01.00.24  MODEL  PAGE 129
-----------------------------------------------------------------------------------------------------------

            L O A D S   S U M M A R Y   D A T A   L I S T I N G

     EARTHQUAKE LOAD CASES :
     -----------------------

     Number of load cases :  8

     Load case 1  -  E1

          Seismic Code :  User-defined

          X-Resultant =        0.123    Y-Resultant =        0.082    Z-Resultant =        0.123

     Load case 2  -  E2

          Seismic Code :  User-defined

          X-Resultant =        0.123    Y-Resultant =        0.082    Z-Resultant =       -0.123

     Load case 3  -  E3

          Seismic Code :  User-defined

          X-Resultant =        0.123    Y-Resultant =       -0.082    Z-Resultant =        0.123

     Load case 4  -  E4

          Seismic Code :  User-defined

          X-Resultant =        0.123    Y-Resultant =       -0.082    Z-Resultant =       -0.123

     Load case 5  -  E5

          Seismic Code :  User-defined

          X-Resultant =       -0.123    Y-Resultant =        0.082    Z-Resultant =        0.123

     Load case 6  -  E6

          Seismic Code :  User-defined

          X-Resultant =       -0.123    Y-Resultant =        0.082    Z-Resultant =       -0.123

     Load case 7  -  E7

          Seismic Code :  User-defined

          X-Resultant =       -0.123    Y-Resultant =       -0.082    Z-Resultant =        0.123

     Load case 8  -  E8

          Seismic Code :  User-defined

          X-Resultant =       -0.123    Y-Resultant =       -0.082    Z-Resultant =       -0.123
```

CALCULATION SHEET

Project No. S54413.024	**Calculation No.** S54413.024-M-001	**Rev.** 0	**Page No.** 103 of 192
Title: LERF Basin 41 Buried Piping Analysis			
Prepared By: JD Williams	**Date:** 5/13/20	**Checked By:** JS Huisingh	**Date:** 5/13/20

```
-----------------------------------------------------------------------------------------------------------
LERF_FRP_3m
04/24/2020                                                    BENTLEY
12:36 PM                                                      AutoPIPE Advanced 11.01.00.24  MODEL  PAGE 130
-----------------------------------------------------------------------------------------------------------

            L O A D S   S U M M A R Y   D A T A   L I S T I N G

     WIND LOAD CASES :
     -----------------

     Number of load cases :  4

     Ground elevation for wind :      -3.50 ft

     Wind shape factor multiplier for piping:  1.000

     Wind shape factor multiplier for beams:   1.000

     Exposure factor for buried pipes :  0.000

     Exposure factor for submerged pipes :  0.000

     Exposed Segments -

     Wind application method : Projected
```

CALCULATION SHEET

Project No. S54413.024	**Calculation No.** S54413.024-M-001	**Rev.** 0	**Page No.** 104 of 192
Title: LERF Basin 41 Buried Piping Analysis			
Prepared By: JD Williams	**Date:** 5/13/20	**Checked By:** JS Huisingh	**Date:** 5/13/20

```
-----------------------------------------------------------------------------------------------------------
LERF_FRP_3m
04/24/2020                                                          BENTLEY
12:36 PM                                                            AutoPIPE Advanced 11.01.00.24  MODEL  PAGE 131
-----------------------------------------------------------------------------------------------------------

            L O A D S   S U M M A R Y   D A T A   L I S T I N G

     Load case 1  -  W1

     Direction  -      X=   0.707     Y=   0.000     Z=   0.707

     ASCE 7-2010

     Basic wind speed at 33 ft (10m): 110.00 mph

     Exposure category : C

     Gust effect factor (G) :   0.85

     Force coefficient (Cf), Figure 29.5-1 : Automatic

     ASCE 7-10 PARAMETERS AS A FUNCTION OF HEIGHT

         HEIGHT       Kz          Cf          Qz       Pressure
         (ft  )                            (psf   )    (psf   )
       ----------  ----------  ----------  ----------  --------

            0.0       0.849       0.700      26.295      15.646
           10.0       0.849       0.700      26.295      15.646
           20.0       0.902       0.700      27.937      16.622
           33.0       1.002       0.700      31.043      18.471
           50.0       1.094       0.700      33.881      20.159
           75.0       1.191       0.700      36.900      21.955
          100.0       1.266       0.700      39.204      23.326
          200.0       1.464       0.700      45.363      26.991
          500.0       1.776       0.700      55.015      32.734
         1000.0       2.010       0.700      62.262      37.046

     Kz = Velocity pressure exposure coefficient
     Cf = Force coefficient or wind shape factor
     Qz = Velocity pressure = 0.00256*Kz*Kzt*V^2  (Eq. 27.3-1)
     Pressure               = Qz*G*Cf               (Eq. 23)

     Per ASCE Figure 29.5-1, wind appl. method should be "Projected"
     Default Gust Factor G assumes pipe frequency > 1 Hz.
     Piping is assumed not to be on an isolated hill (Kzt=1).
     Automatic Cf reported in chart above is calculated
     assuming D=1 ft. Program uses actual Pipe OD to
     calculate Cf at height during analysis.
```

CALCULATION SHEET

Project No. S54413.024	**Calculation No.** S54413.024-M-001	**Rev.** 0	**Page No.** 105 of 192
Title: LERF Basin 41 Buried Piping Analysis			
Prepared By: JD Williams	**Date:** 5/13/20	**Checked By:** JS Huisingh	**Date:** 5/13/20

```
-----------------------------------------------------------------------------------------------------------------
LERF_FRP_3m
04/24/2020                                                                  BENTLEY
12:36 PM                                                                    AutoPIPE Advanced 11.01.00.24  MODEL  PAGE 132
-----------------------------------------------------------------------------------------------------------------

            L O A D S   S U M M A R Y   D A T A   L I S T I N G

     Load case 1  -  W1

     Structural members wind load application data

     Structural members wind facing width:    Wind facing

     Gust effect factor (G) for structures (manual):     0.85

     Force coefficient (Cf) for structures (manual):    2.000

     ASCE 7-10 PARAMETERS AS A FUNCTION OF HEIGHT

         HEIGHT       Kz          Cf          Qz       Pressure
         (ft  )                            (psf   )    (psf   )
       ----------  ----------  ----------  ----------  --------

            0.0       0.849       2.000      26.295      44.702
           10.0       0.849       2.000      26.295      44.702
           20.0       0.902       2.000      27.937      47.493
           33.0       1.002       2.000      31.043      52.773
           50.0       1.094       2.000      33.881      57.597
           75.0       1.191       2.000      36.900      62.730
          100.0       1.266       2.000      39.204      66.646
          200.0       1.464       2.000      45.363      77.117
          500.0       1.776       2.000      55.015      93.525
         1000.0       2.010       2.000      62.262     105.845

     Kz = Velocity pressure exposure coefficient
     Cf = Force coefficient or wind shape factor
     Qz = Velocity pressure = 0.00256*Kz*Kzt*V^2  (Eq. 27.3-1)
     Pressure               = Qz*G*Cf                (Eq. 23)
```

CALCULATION SHEET

Project No. S54413.024	**Calculation No.** S54413.024-M-001	**Rev.** 0	**Page No.** 106 of 192
Title: LERF Basin 41 Buried Piping Analysis			
Prepared By: JD Williams	**Date:** 5/13/20	**Checked By:** JS Huisingh	**Date:** 5/13/20

```
-----------------------------------------------------------------------------------------------------------
LERF_FRP_3m
04/24/2020                                                          BENTLEY
12:36 PM                                                            AutoPIPE Advanced 11.01.00.24  MODEL  PAGE 133
-----------------------------------------------------------------------------------------------------------

            L O A D S   S U M M A R Y   D A T A   L I S T I N G

     Load case 2  -  W2

     Direction  -      X=  -0.707     Y=   0.000     Z=  -0.707

     ASCE 7-2010

     Basic wind speed at 33 ft (10m): 110.00 mph

     Exposure category : C

     Gust effect factor (G) :   0.85

     Force coefficient (Cf), Figure 29.5-1 : Automatic

     ASCE 7-10 PARAMETERS AS A FUNCTION OF HEIGHT

         HEIGHT       Kz          Cf          Qz       Pressure
         (ft  )                            (psf   )    (psf   )
       ----------  ----------  ----------  ----------  --------

            0.0       0.849       0.700      26.295      15.646
           10.0       0.849       0.700      26.295      15.646
           20.0       0.902       0.700      27.937      16.622
           33.0       1.002       0.700      31.043      18.471
           50.0       1.094       0.700      33.881      20.159
           75.0       1.191       0.700      36.900      21.955
          100.0       1.266       0.700      39.204      23.326
          200.0       1.464       0.700      45.363      26.991
          500.0       1.776       0.700      55.015      32.734
         1000.0       2.010       0.700      62.262      37.046

     Kz = Velocity pressure exposure coefficient
     Cf = Force coefficient or wind shape factor
     Qz = Velocity pressure = 0.00256*Kz*Kzt*V^2  (Eq. 27.3-1)
     Pressure               = Qz*G*Cf               (Eq. 23)

     Per ASCE Figure 29.5-1, wind appl. method should be "Projected"
     Default Gust Factor G assumes pipe frequency > 1 Hz.
     Piping is assumed not to be on an isolated hill (Kzt=1).
     Automatic Cf reported in chart above is calculated
     assuming D=1 ft. Program uses actual Pipe OD to
     calculate Cf at height during analysis.
```

CALCULATION SHEET

Project No. S54413.024	**Calculation No.** S54413.024-M-001	**Rev.** 0	**Page No.** 107 of 192
Title: LERF Basin 41 Buried Piping Analysis			
Prepared By: JD Williams	**Date:** 5/13/20	**Checked By:** JS Huisingh	**Date:** 5/13/20

```
-----------------------------------------------------------------------------------------------------------------
LERF_FRP_3m
04/24/2020                                                                  BENTLEY
12:36 PM                                                                    AutoPIPE Advanced 11.01.00.24  MODEL  PAGE 134
-----------------------------------------------------------------------------------------------------------------

            L O A D S   S U M M A R Y   D A T A   L I S T I N G

     Load case 2  -  W2

     Structural members wind load application data

     Structural members wind facing width:    Wind facing

     Gust effect factor (G) for structures (manual):     0.85

     Force coefficient (Cf) for structures (manual):    2.000

     ASCE 7-10 PARAMETERS AS A FUNCTION OF HEIGHT

         HEIGHT       Kz          Cf          Qz       Pressure
         (ft  )                            (psf   )    (psf   )
       ----------  ----------  ----------  ----------  --------

            0.0       0.849       2.000      26.295      44.702
           10.0       0.849       2.000      26.295      44.702
           20.0       0.902       2.000      27.937      47.493
           33.0       1.002       2.000      31.043      52.773
           50.0       1.094       2.000      33.881      57.597
           75.0       1.191       2.000      36.900      62.730
          100.0       1.266       2.000      39.204      66.646
          200.0       1.464       2.000      45.363      77.117
          500.0       1.776       2.000      55.015      93.525
         1000.0       2.010       2.000      62.262     105.845

     Kz = Velocity pressure exposure coefficient
     Cf = Force coefficient or wind shape factor
     Qz = Velocity pressure = 0.00256*Kz*Kzt*V^2  (Eq. 27.3-1)
     Pressure               = Qz*G*Cf                (Eq. 23)
```

CALCULATION SHEET

Project No. S54413.024	**Calculation No.** S54413.024-M-001	**Rev.** 0	**Page No.** 108 of 192
Title: LERF Basin 41 Buried Piping Analysis			
Prepared By: JD Williams	**Date:** 5/13/20	**Checked By:** JS Huisingh	**Date:** 5/13/20

```
-----------------------------------------------------------------------------------------------------------
LERF_FRP_3m
04/24/2020                                                          BENTLEY
12:36 PM                                                            AutoPIPE Advanced 11.01.00.24  MODEL  PAGE 135
-----------------------------------------------------------------------------------------------------------

            L O A D S   S U M M A R Y   D A T A   L I S T I N G

     Load case 3  -  W3

     Direction  -      X=  -0.707     Y=   0.000     Z=   0.707

     ASCE 7-2010

     Basic wind speed at 33 ft (10m): 110.00 mph

     Exposure category : C

     Gust effect factor (G) :   0.85

     Force coefficient (Cf), Figure 29.5-1 : Automatic

     ASCE 7-10 PARAMETERS AS A FUNCTION OF HEIGHT

         HEIGHT       Kz          Cf          Qz       Pressure
         (ft  )                            (psf   )    (psf   )
       ----------  ----------  ----------  ----------  --------

            0.0       0.849       0.700      26.295      15.646
           10.0       0.849       0.700      26.295      15.646
           20.0       0.902       0.700      27.937      16.622
           33.0       1.002       0.700      31.043      18.471
           50.0       1.094       0.700      33.881      20.159
           75.0       1.191       0.700      36.900      21.955
          100.0       1.266       0.700      39.204      23.326
          200.0       1.464       0.700      45.363      26.991
          500.0       1.776       0.700      55.015      32.734
         1000.0       2.010       0.700      62.262      37.046

     Kz = Velocity pressure exposure coefficient
     Cf = Force coefficient or wind shape factor
     Qz = Velocity pressure = 0.00256*Kz*Kzt*V^2  (Eq. 27.3-1)
     Pressure               = Qz*G*Cf               (Eq. 23)

     Per ASCE Figure 29.5-1, wind appl. method should be "Projected"
     Default Gust Factor G assumes pipe frequency > 1 Hz.
     Piping is assumed not to be on an isolated hill (Kzt=1).
     Automatic Cf reported in chart above is calculated
     assuming D=1 ft. Program uses actual Pipe OD to
     calculate Cf at height during analysis.
```

CALCULATION SHEET

Project No. S54413.024	**Calculation No.** S54413.024-M-001	**Rev.** 0	**Page No.** 109 of 192
Title: LERF Basin 41 Buried Piping Analysis			
Prepared By: JD Williams	**Date:** 5/13/20	**Checked By:** JS Huisingh	**Date:** 5/13/20

```
-----------------------------------------------------------------------------------------------------------------
LERF_FRP_3m
04/24/2020                                                                  BENTLEY
12:36 PM                                                                    AutoPIPE Advanced 11.01.00.24  MODEL  PAGE 136
-----------------------------------------------------------------------------------------------------------------

            L O A D S   S U M M A R Y   D A T A   L I S T I N G

     Load case 3  -  W3

     Structural members wind load application data

     Structural members wind facing width:    Wind facing

     Gust effect factor (G) for structures (manual):     0.85

     Force coefficient (Cf) for structures (manual):    2.000

     ASCE 7-10 PARAMETERS AS A FUNCTION OF HEIGHT

         HEIGHT       Kz          Cf          Qz       Pressure
         (ft  )                            (psf   )    (psf   )
       ----------  ----------  ----------  ----------  --------

           0.0       0.849       2.000      26.295      44.702
          10.0       0.849       2.000      26.295      44.702
          20.0       0.902       2.000      27.937      47.493
          33.0       1.002       2.000      31.043      52.773
          50.0       1.094       2.000      33.881      57.597
          75.0       1.191       2.000      36.900      62.730
         100.0       1.266       2.000      39.204      66.646
         200.0       1.464       2.000      45.363      77.117
         500.0       1.776       2.000      55.015      93.525
        1000.0       2.010       2.000      62.262     105.845

     Kz = Velocity pressure exposure coefficient
     Cf = Force coefficient or wind shape factor
     Qz = Velocity pressure = 0.00256*Kz*Kzt*V^2  (Eq. 27.3-1)
     Pressure               = Qz*G*Cf                (Eq. 23)
```

CALCULATION SHEET

Project No. S54413.024	**Calculation No.** S54413.024-M-001	**Rev.** 0	**Page No.** 110 of 192
Title: LERF Basin 41 Buried Piping Analysis			
Prepared By: JD Williams	**Date:** 5/13/20	**Checked By:** JS Huisingh	**Date:** 5/13/20

```
-----------------------------------------------------------------------------------------------------------
LERF_FRP_3m
04/24/2020                                                          BENTLEY
12:36 PM                                                            AutoPIPE Advanced 11.01.00.24  MODEL  PAGE 137
-----------------------------------------------------------------------------------------------------------

            L O A D S   S U M M A R Y   D A T A   L I S T I N G

     Load case 4  -  W4

     Direction  -      X=   0.707     Y=   0.000     Z=  -0.707

     ASCE 7-2010

     Basic wind speed at 33 ft (10m): 110.00 mph

     Exposure category : C

     Gust effect factor (G) :   0.85

     Force coefficient (Cf), Figure 29.5-1 : Automatic

     ASCE 7-10 PARAMETERS AS A FUNCTION OF HEIGHT

         HEIGHT       Kz          Cf          Qz       Pressure
         (ft  )                            (psf   )    (psf   )
       ----------  ----------  ----------  ----------  --------

            0.0       0.849       0.700      26.295      15.646
           10.0       0.849       0.700      26.295      15.646
           20.0       0.902       0.700      27.937      16.622
           33.0       1.002       0.700      31.043      18.471
           50.0       1.094       0.700      33.881      20.159
           75.0       1.191       0.700      36.900      21.955
          100.0       1.266       0.700      39.204      23.326
          200.0       1.464       0.700      45.363      26.991
          500.0       1.776       0.700      55.015      32.734
         1000.0       2.010       0.700      62.262      37.046

     Kz = Velocity pressure exposure coefficient
     Cf = Force coefficient or wind shape factor
     Qz = Velocity pressure = 0.00256*Kz*Kzt*V^2  (Eq. 27.3-1)
     Pressure               = Qz*G*Cf               (Eq. 23)

     Per ASCE Figure 29.5-1, wind appl. method should be "Projected"
     Default Gust Factor G assumes pipe frequency > 1 Hz.
     Piping is assumed not to be on an isolated hill (Kzt=1).
     Automatic Cf reported in chart above is calculated
     assuming D=1 ft. Program uses actual Pipe OD to
     calculate Cf at height during analysis.
```

CALCULATION SHEET

Project No. S54413.024	**Calculation No.** S54413.024-M-001	**Rev.** 0	**Page No.** 111 of 192
Title: LERF Basin 41 Buried Piping Analysis			
Prepared By: JD Williams	**Date:** 5/13/20	**Checked By:** JS Huisingh	**Date:** 5/13/20

```
-----------------------------------------------------------------------------------------------------------------
LERF_FRP_3m
04/24/2020                                                                  BENTLEY
12:36 PM                                                                    AutoPIPE Advanced 11.01.00.24  MODEL  PAGE 138
-----------------------------------------------------------------------------------------------------------------

            L O A D S   S U M M A R Y   D A T A   L I S T I N G

     Load case 4  -  W4

     Structural members wind load application data

     Structural members wind facing width:    Wind facing

     Gust effect factor (G) for structures (manual):     0.85

     Force coefficient (Cf) for structures (manual):    2.000

     ASCE 7-10 PARAMETERS AS A FUNCTION OF HEIGHT

         HEIGHT       Kz          Cf          Qz       Pressure
         (ft  )                            (psf   )    (psf   )
       ----------  ----------  ----------  ----------  --------

           0.0       0.849       2.000      26.295      44.702
          10.0       0.849       2.000      26.295      44.702
          20.0       0.902       2.000      27.937      47.493
          33.0       1.002       2.000      31.043      52.773
          50.0       1.094       2.000      33.881      57.597
          75.0       1.191       2.000      36.900      62.730
         100.0       1.266       2.000      39.204      66.646
         200.0       1.464       2.000      45.363      77.117
         500.0       1.776       2.000      55.015      93.525
        1000.0       2.010       2.000      62.262     105.845

     Kz = Velocity pressure exposure coefficient
     Cf = Force coefficient or wind shape factor
     Qz = Velocity pressure = 0.00256*Kz*Kzt*V^2  (Eq. 27.3-1)
     Pressure               = Qz*G*Cf                (Eq. 23)
```

CALCULATION SHEET

Project No. S54413.024	**Calculation No.** S54413.024-M-001	**Rev.** 0	**Page No.** 112 of 192
Title: LERF Basin 41 Buried Piping Analysis			
Prepared By: JD Williams	**Date:** 5/13/20	**Checked By:** JS Huisingh	**Date:** 5/13/20

```
-----------------------------------------------------------------------------------------------------------------
LERF_FRP_3m
04/24/2020                                                                BENTLEY
12:36 PM                                                                  AutoPIPE Advanced 11.01.00.24  MODEL  PAGE 139
-----------------------------------------------------------------------------------------------------------------

                              S U P P O R T   D A T A   L I S T I N G

 Point Support  Support Conn.to Comp.Wt  Stiff.     Gap 1   Gap 2  Fric. GapSet Preload Ld.Var Size    Figure
 Name   Type      ID     /Dir    (lb)               (in)    (in)   Fact. /#hgr   (lbf)
 ----- -------- ------- ------- ------- ---------- ------- ------- ----- ------ ------- ------ ---- ------------

 Tag No.: INT                                     Attachment ID: <None>
 A01   Guide-V  A03  1  E01       0.000 Rigid        0.000   0.000  0.00
       Guide-H  A03  1  E01       0.000 Rigid        0.000   0.000  0.00

 Tag No.: INT                                     Attachment ID: <None>
 A02   Guide-V  A04  1  E02       0.000 Rigid        0.000   0.000  0.00
       Guide-H  A04  1  E02       0.000 Rigid        0.000   0.000  0.00

 Tag No.: INT                                     Attachment ID: <None>
 A03   Guide-V  A05  1  E03       0.000 Rigid        0.000   0.000  0.00
       Guide-H  A05  1  E03       0.000 Rigid        0.000   0.000  0.00

 Tag No.: INT                                     Attachment ID: <None>
 A04   Guide-V  A06  1  E04       0.000 Rigid        0.000   0.000  0.00
       Guide-H  A06  1  E04       0.000 Rigid        0.000   0.000  0.00

 Tag No.: INT                                     Attachment ID: <None>
 A05   Guide-V  A12  1  E06       0.000 Rigid        0.000   0.000  0.00
       Guide-H  A12  1  E06       0.000 Rigid        0.000   0.000  0.00

 Tag No.: INT                                     Attachment ID: <None>
 A07   Guide-V  A11  1  E08       0.000 Rigid        0.000   0.000  0.00
       Guide-H  A11  1  E08       0.000 Rigid        0.000   0.000  0.00

 Tag No.: INT                                     Attachment ID: <None>
 A08   Guide-V  A07  1  E10       0.000 Rigid        0.000   0.000  0.00
       Guide-H  A07  1  E10       0.000 Rigid        0.000   0.000  0.00

 Tag No.: INT                                     Attachment ID: <None>
 A09   Guide-V  A08  1  E11       0.000 Rigid        0.000   0.000  0.00
       Guide-H  A08  1  E11       0.000 Rigid        0.000   0.000  0.00

 Tag No.: INT                                     Attachment ID: <None>
 A10   Guide-V  A09  1  E12       0.000 Rigid        0.000   0.000  0.00
       Guide-H  A09  1  E12       0.000 Rigid        0.000   0.000  0.00

 Tag No.: INT                                     Attachment ID: <None>
 A11   Guide-V  A10  1  E13       0.000 Rigid        0.000   0.000  0.00
       Guide-H  A10  1  E13       0.000 Rigid        0.000   0.000  0.00

 Tag No.: INT                                     Attachment ID: <None>
 B02   Guide-V  B11  1  F14       0.000 Rigid        0.000   0.000  0.00
       Guide-H  B11  1  F14       0.000 Rigid        0.000   0.000  0.00

 Tag No.: INT                                     Attachment ID: <None>
 B03   Guide-V  B05  1  F07       0.000 Rigid        0.000   0.000  0.00
       Guide-H  B05  1  F07       0.000 Rigid        0.000   0.000  0.00

 Tag No.: INT                                     Attachment ID: <None>
 B05   Guide-V  B06  1  F05       0.000 Rigid        0.000   0.000  0.00
       Guide-H  B06  1  F05       0.000 Rigid        0.000   0.000  0.00
```

CALCULATION SHEET

Project No. S54413.024	**Calculation No.** S54413.024-M-001	**Rev.** 0	**Page No.** 113 of 192
Title: LERF Basin 41 Buried Piping Analysis			
Prepared By: JD Williams	**Date:** 5/13/20	**Checked By:** JS Huisingh	**Date:** 5/13/20

```
-----------------------------------------------------------------------------------------------------------------
LERF_FRP_3m
04/24/2020                                                                BENTLEY
12:36 PM                                                                  AutoPIPE Advanced 11.01.00.24  MODEL  PAGE 140
-----------------------------------------------------------------------------------------------------------------

                              S U P P O R T   D A T A   L I S T I N G

 Point Support  Support Conn.to Comp.Wt  Stiff.     Gap 1   Gap 2  Fric. GapSet Preload Ld.Var Size    Figure
 Name   Type      ID     /Dir    (lb)               (in)    (in)   Fact. /#hgr   (lbf)
 ----- -------- ------- ------- ------- ---------- ------- ------- ----- ------ ------- ------ ---- ------------
 Tag No.: INT                                     Attachment ID: <None>
 B06   Guide-V  B08  1  F11       0.000 Rigid        0.000   0.000  0.00
       Guide-H  B08  1  F11       0.000 Rigid        0.000   0.000  0.00

 Tag No.: INT                                     Attachment ID: <None>
 B07   Guide-V  B07  2  F10       0.000 Rigid        0.000   0.000  0.00
       Guide-H  B07  2  F10       0.000 Rigid        0.000   0.000  0.00

 Tag No.: INT                                     Attachment ID: <None>
 B08   Guide-V  B03  1  F03       0.000 Rigid        0.000   0.000  0.00
       Guide-H  B03  1  F03       0.000 Rigid        0.000   0.000  0.00

 Tag No.: INT                                     Attachment ID: <None>
 B09   Guide-V  B07  1  F01       0.000 Rigid        0.000   0.000  0.00
       Guide-H  B07  1  F01       0.000 Rigid        0.000   0.000  0.00

 Tag No.: INT                                     Attachment ID: <None>
 C01   Guide-V  C03  1  G01       0.000 Rigid        0.000   0.000  0.00
       Guide-H  C03  1  G01       0.000 Rigid        0.000   0.000  0.00

 Tag No.: INT                                     Attachment ID: <None>
 C02   Guide-V  C04  1  G02       0.000 Rigid        0.000   0.000  0.00
       Guide-H  C04  1  G02       0.000 Rigid        0.000   0.000  0.00

 Tag No.: INT                                     Attachment ID: <None>
 C03   Guide-V  C05  1  G03       0.000 Rigid        0.000   0.000  0.00
       Guide-H  C05  1  G03       0.000 Rigid        0.000   0.000  0.00

 Tag No.: INT                                     Attachment ID: <None>
 C04   Guide-V  C06  1  G04       0.000 Rigid        0.000   0.000  0.00
       Guide-H  C06  1  G04       0.000 Rigid        0.000   0.000  0.00

 Tag No.: INT                                     Attachment ID: <None>
 C05   Guide-V  C13  1  G06       0.000 Rigid        0.000   0.000  0.00
       Guide-H  C13  1  G06       0.000 Rigid        0.000   0.000  0.00

 Tag No.: INT                                     Attachment ID: <None>
 C07   Guide-V  C12  1  G08       0.000 Rigid        0.000   0.000  0.00
       Guide-H  C12  1  G08       0.000 Rigid        0.000   0.000  0.00

 Tag No.: INT                                     Attachment ID: <None>
 C08   Guide-V  C07  1  G10       0.000 Rigid        0.000   0.000  0.00
       Guide-H  C07  1  G10       0.000 Rigid        0.000   0.000  0.00

 Tag No.: INT                                     Attachment ID: <None>
 C09   Guide-V  C08  1  G11       0.000 Rigid        0.000   0.000  0.00
       Guide-H  C08  1  G11       0.000 Rigid        0.000   0.000  0.00

 Tag No.: INT                                     Attachment ID: <None>
 C10   Guide-V  C09  1  G12       0.000 Rigid        0.000   0.000  0.00
       Guide-H  C09  1  G12       0.000 Rigid        0.000   0.000  0.00
```

CALCULATION SHEET

Project No. S54413.024	**Calculation No.** S54413.024-M-001	**Rev.** 0	**Page No.** 114 of 192
Title: LERF Basin 41 Buried Piping Analysis			
Prepared By: JD Williams	**Date:** 5/13/20	**Checked By:** JS Huisingh	**Date:** 5/13/20

```
-----------------------------------------------------------------------------------------------------------------
LERF_FRP_3m
04/24/2020                                                                BENTLEY
12:36 PM                                                                  AutoPIPE Advanced 11.01.00.24  MODEL  PAGE 141
-----------------------------------------------------------------------------------------------------------------

                              S U P P O R T   D A T A   L I S T I N G

 Point Support  Support Conn.to Comp.Wt  Stiff.     Gap 1   Gap 2  Fric. GapSet Preload Ld.Var Size    Figure
 Name   Type      ID     /Dir    (lb)               (in)    (in)   Fact. /#hgr   (lbf)
 ----- -------- ------- ------- ------- ---------- ------- ------- ----- ------ ------- ------ ---- ------------
 Tag No.: INT                                     Attachment ID: <None>
 C11   Guide-V  C10  1  G13       0.000 Rigid        0.000   0.000  0.00
       Guide-H  C10  1  G13       0.000 Rigid        0.000   0.000  0.00

 Tag No.: INT                                     Attachment ID: <None>
 D02   Guide-V  D13  1  H02       0.000 Rigid        0.000   0.000  0.00
       Guide-H  D13  1  H02       0.000 Rigid        0.000   0.000  0.00

 Tag No.: INT                                     Attachment ID: <None>
 D03   Guide-V  D05  1  H04       0.000 Rigid        0.000   0.000  0.00
       Guide-H  D05  1  H04       0.000 Rigid        0.000   0.000  0.00

 Tag No.: INT                                     Attachment ID: <None>
 D05   Guide-V  D06  1  H06       0.000 Rigid        0.000   0.000  0.00
       Guide-H  D06  1  H06       0.000 Rigid        0.000   0.000  0.00

 Tag No.: INT                                     Attachment ID: <None>
 D06   Guide-V  D10  2  H09       0.000 Rigid        0.000   0.000  0.00
       Guide-H  D10  2  H09       0.000 Rigid        0.000   0.000  0.00

 Tag No.: INT                                     Attachment ID: <None>
 D07   Guide-V  D09  2  H10       0.000 Rigid        0.000   0.000  0.00
       Guide-H  D09  2  H10       0.000 Rigid        0.000   0.000  0.00

 Tag No.: INT                                     Attachment ID: <None>
 D08   Guide-V  D09  1  H12       0.000 Rigid        0.000   0.000  0.00
       Guide-H  D09  1  H12       0.000 Rigid        0.000   0.000  0.00

 Tag No.: INT                                     Attachment ID: <None>
 D10   Guide-V  D10  1  H14       0.000 Rigid        0.000   0.000  0.00
       Guide-H  D10  1  H14       0.000 Rigid        0.000   0.000  0.00

 Tag No.: INT                                     Attachment ID: <None>
 D11   Guide-V  D07  1  H17       0.000 Rigid        0.000   0.000  0.00
       Guide-H  D07  1  H17       0.000 Rigid        0.000   0.000  0.00

 Tag No.: NEW OFF BASIN 41                        Attachment ID: <None>
 F13   Guide-V  F13  1  5263      0.000 Rigid        0.000   0.040  0.00  Weightless
       Guide-H  F13  1  5263      0.000 Rigid        0.063   0.063  0.00  Weightless

 Tag No.: NEW-ON BASIN 41                         Attachment ID: <None>
 F12   Guide-V  F12  1  5169      0.000 Rigid        0.000   0.125  0.00  Weightless
       Guide-H  F12  1  5169      0.000 Rigid        0.062   0.062  0.00  Weightless

 Tag No.: NEW-ON BASIN 41                         Attachment ID: <None>
 H01   Guide-V  H16  1  5197      0.000 Rigid        0.000   0.125  0.00  Weightless
       Guide-H  H16  1  5197      0.000 Rigid        0.062   0.062  0.00  Weightless

 Tag No.: NEW OFF BASIN 41                        Attachment ID: <None>
 H08   Guide-V  H08  1  5401      0.000 Rigid        0.000   0.040  0.00  Weightless
       Guide-H  H08  1  5401      0.000 Rigid        0.063   0.063  0.00  Weightless
```

CALCULATION SHEET

Project No. S54413.024	**Calculation No.** S54413.024-M-001	**Rev.** 0	**Page No.** 115 of 192
Title: LERF Basin 41 Buried Piping Analysis			
Prepared By: JD Williams	**Date:** 5/13/20	**Checked By:** JS Huisingh	**Date:** 5/13/20

```
-----------------------------------------------------------------------------------------------------------------
LERF_FRP_3m
04/24/2020                                                                  BENTLEY
12:36 PM                                                                    AutoPIPE Advanced 11.01.00.24  MODEL  PAGE 142
-----------------------------------------------------------------------------------------------------------------

                              S U P P O R T   D A T A   L I S T I N G

 Point Support  Support Conn.to Comp.Wt  Stiff.     Gap 1   Gap 2  Fric. GapSet Preload Ld.Var Size    Figure
 Name   Type      ID     /Dir    (lb)               (in)    (in)   Fact. /#hgr   (lbf)
 ----- -------- ------- ------- ------- ---------- ------- ------- ----- ------ ------- ------ ---- ------------
 Tag No.: F07                                     Attachment ID: <None>
 P05   Guide-V  P05  2  5105      0.000 Rigid        0.000   0.000  0.00
       Guide-H  P05  2  5105      0.000 Rigid        0.000   0.000  0.00

 Tag No.: F12                                     Attachment ID: <None>
 P06   Guide-V  P06  2  5138      0.000 Rigid        0.000   0.000  0.00
       Guide-H  P06  2  5138      0.000 Rigid        0.000   0.000  0.00

 Tag No.: F08                                     Attachment ID: <None>
 P07   Guide-V  P07  2  5107      0.000 Rigid        0.000   0.000  0.00
       Guide-H  P07  2  5107      0.000 Rigid        0.000   0.000  0.00

 Tag No.: F09                                     Attachment ID: <None>
 P10   Guide-V  P10  2  5127      0.000 Rigid        0.000   0.000  0.00
       Guide-H  P10  2  5127      0.000 Rigid        0.000   0.000  0.00

 Tag No.: Valve Support                           Attachment ID: <None>
 P11 M Shoe     P11 M1  Ground    0.000 Rigid        0.000 100.000  0.00  Weightless

 Tag No.: G07                                     Attachment ID: <None>
 Q05   Guide-V  Q05  2  5101      0.000 Rigid        0.000   0.000  0.00
       Guide-H  Q05  2  5101      0.000 Rigid        0.000   0.000  0.00

 Tag No.: G12                                     Attachment ID: <None>
 Q06   Guide-V  Q06  2  5144      0.000 Rigid        0.000   0.000  0.00
       Guide-H  Q06  2  5144      0.000 Rigid        0.000   0.000  0.00

 Tag No.: G08                                     Attachment ID: <None>
 Q07   Guide-V  Q07  2  5103      0.000 Rigid        0.000   0.000  0.00
       Guide-H  Q07  2  5103      0.000 Rigid        0.000   0.000  0.00

 Tag No.: G10                                     Attachment ID: <None>
 Q10   Guide-V  Q10  2  5125      0.000 Rigid        0.000   0.000  0.00
       Guide-H  Q10  2  5125      0.000 Rigid        0.000   0.000  0.00

 Tag No.: Valve Support                           Attachment ID: <None>
 Q11 M Shoe     Q11 M1  Ground    0.000 Rigid        0.000 100.000  0.00  Weightless

 Tag No.: H13                                     Attachment ID: <None>
 R05   Guide-V  R05  2  5097      0.000 Rigid        0.000   0.000  0.00
       Guide-H  R05  2  5097      0.000 Rigid        0.000   0.000  0.00

 Tag No.: H17                                     Attachment ID: <None>
 R06   Guide-V  R06  2  5140      0.000 Rigid        0.000   0.000  0.00
       Guide-H  R06  2  5140      0.000 Rigid        0.000   0.000  0.00

 Tag No.: H14                                     Attachment ID: <None>
 R07   Guide-V  R07  2  5099      0.000 Rigid        0.000   0.000  0.00
       Guide-H  R07  2  5099      0.000 Rigid        0.000   0.000  0.00

 Tag No.: H15                                     Attachment ID: <None>
 R13   Guide-V  R13  2  5119      0.000 Rigid        0.000   0.000  0.00
```

BREAK IN DATA

CALCULATION SHEET

Project No. S54413.024	**Calculation No.** S54413.024-M-001	**Rev.** 0	**Page No.** 116 of 192
Title: LERF Basin 41 Buried Piping Analysis			
Prepared By: JD Williams	**Date:** 5/13/20	**Checked By:** JS Huisingh	**Date:** 5/13/20

```
-----------------------------------------------------------------------------------------------------------
LERF_FRP_3m
04/24/2020                                                    BENTLEY
12:36 PM                                                      AutoPIPE Advanced 11.01.00.24  RESULT PAGE 159
-----------------------------------------------------------------------------------------------------------


                  A N A L Y S I S   S U M M A R Y


   Current model revision number : 173

     Constant values used
              Acceleration due to gravity................  386.40000 in/s/s
              Density of water for specific gravity Cal..     62.400 lb/cu.ft
              Density of sea water.......................     62.400 lb/cu.ft
              Density of ground water ...................     62.400 lb/cu.ft

     Static - Analysis set number ................... 1
              Date and Time of analysis ............. Apr 23, 2020   2:15 PM
              Model Revision Number ................. 173
              Number of load cases .................. 15
              Load cases analyzed ................... GR T1 E1 E2 E3 E4 E5 E6 E7 E8 W1 W2 W3 W4 P1
              Description ........................... Analysis Set No.1
              Gaps/Friction/Soil considered ......... Yes
              Tolerance - Force, Displacement ....... 10.00 lbf  0.0010 in
              Friction - Scale Factor, Tolerance .... 1.00   0.10
              Ignore friction for cases E1,E2,E3 .... Yes
              Ignore friction for gravity case ...... Yes
              Hanger design run ..................... No
              Cut short included .................... No
              Thermal bowing included ............... No
              Include Bourdon rotational effect ..... No
              Pipe radius for Bourdon calculation ... Mean
              Occasional load analysis type ......... Nonlinear
              Non-linear analysis summary file ...... LERF_FRP_3m.LOG
              Use default load sequence ............. Yes
              Base load cases for nonlinear analysis
                                                        GR   = None
                                                        T1   = P1
                                                        E1   = T1
                                                        E2   = T1
                                                        E3   = T1
                                                        E4   = T1
                                                        E5   = T1
                                                        E6   = T1
                                                        E7   = T1
                                                        E8   = T1
                                                        W1   = T1
                                                        W2   = T1
                                                        W3   = T1
                                                        W4   = T1
                                                        P1   = GR
              Weight of contents included ........... Yes
              Fluid density factor for contents ..... 1.00
              Pressure stiffening case .............. None
              Hot modulus case ...................... None
              Pressure Extension..................... Yes
              Soil Stiffness ........................ Low
              Water elevation for buoyancy loads .... Not considered
              Wind analysis method .................. Projected
              Use corroded thickness in analysis .... No
              Rigid stiffness factor ................ 1000.0
```

CALCULATION SHEET

Project No. S54413.024	**Calculation No.** S54413.024-M-001	**Rev.** 0	**Page No.** 117 of 192
Title: LERF Basin 41 Buried Piping Analysis			
Prepared By: JD Williams	**Date:** 5/13/20	**Checked By:** JS Huisingh	**Date:** 5/13/20

```
-----------------------------------------------------------------------------------------------------------
LERF_FRP_3m
04/24/2020                                                    BENTLEY
12:36 PM                                                      AutoPIPE Advanced 11.01.00.24  RESULT PAGE 160
-----------------------------------------------------------------------------------------------------------

              Support rigid stiffness (translation) . 0.100000E+11 lb/in
              Support rigid stiffness (rotation) .... 0.100000E+11 ft-lb/deg
              Anchor rigid stiffness (translation) .. 0.100000E+11 lb/in
              Anchor rigid stiffness (rotation) ..... 0.100000E+11 ft-lb/deg
              Remove Lift-Off Supports ............. No

     Static - Analysis set number ................... 2
              Date and Time of analysis ............ Apr 23, 2020   2:18 PM
              Model Revision Number ................ 173
              Number of load cases ................. 15
              Load cases analyzed ................... GR T2 E1 E2 E3 E4 E5 E6 E7 E8 W1 W2 W3 W4 P2
              Description ........................
              Gaps/Friction/Soil considered ......... Yes
              Tolerance - Force, Displacement ....... 10.00 lbf  0.0010 in
              Friction - Scale Factor, Tolerance .... 1.00   0.10
              Ignore friction for cases E1,E2,E3 .... Yes
              Ignore friction for gravity case ...... Yes
              Hanger design run ..................... No
              Cut short included .................... No
              Thermal bowing included ............... No
              Include Bourdon rotational effect ..... No
              Pipe radius for Bourdon calculation ... Mean
              Occasional load analysis type ......... Nonlinear
              Non-linear analysis summary file ...... LERF_FRP_3m.LOG
              Use default load sequence ............. Yes
              Base load cases for nonlinear analysis
                                                         GR   = None
                                                         T2   = GR
                                                         E1   = P2
                                                         E2   = P2
                                                         E3   = P2
                                                         E4   = P2
                                                         E5   = P2
                                                         E6   = P2
                                                         E7   = P2
                                                         E8   = P2
                                                         W1   = P2
                                                         W2   = P2
                                                         W3   = P2
                                                         W4   = P2
                                                         P2   = T2
              Weight of contents included ........... Yes
              Fluid density factor for contents ..... 1.00
              Pressure stiffening case .............. None
              Hot modulus case ...................... None
              Pressure Extension..................... Yes
              Soil Stiffness ........................ Low
              Water elevation for buoyancy loads .... Not considered
              Wind analysis method .................. Projected
              Use corroded thickness in analysis .... No
              Rigid stiffness factor ................ 1000.0
              Support rigid stiffness (translation) . 0.100000E+11 lb/in
              Support rigid stiffness (rotation) .... 0.100000E+11 ft-lb/deg
              Anchor rigid stiffness (translation) .. 0.100000E+11 lb/in
              Anchor rigid stiffness (rotation) ..... 0.100000E+11 ft-lb/deg
              Remove Lift-Off Supports ............. No
```

CALCULATION SHEET

Project No. S54413.024	**Calculation No.** S54413.024-M-001	**Rev.** 0	**Page No.** 118 of 192
Title: LERF Basin 41 Buried Piping Analysis			
Prepared By: JD Williams	**Date:** 5/13/20	**Checked By:** JS Huisingh	**Date:** 5/13/20

```
-----------------------------------------------------------------------------------------------------------
LERF_FRP_3m
04/24/2020                                                    BENTLEY
12:36 PM                                                      AutoPIPE Advanced 11.01.00.24  RESULT PAGE 161
-----------------------------------------------------------------------------------------------------------

     Static - Analysis set number ................... 3
              Date and Time of analysis ............ Apr 23, 2020   2:20 PM
              Model Revision Number ................ 173
              Number of load cases ................. 15
              Load cases analyzed .................. GR T3 E1 E2 E3 E4 E5 E6 E7 E8 W1 W2 W3 W4 P3
              Description ...........................
              Gaps/Friction/Soil considered ......... Yes
              Tolerance - Force, Displacement ...... 10.00 lbf  0.0010 in
              Friction - Scale Factor, Tolerance .... 1.00   0.10
              Ignore friction for cases E1,E2,E3 .... Yes
              Ignore friction for gravity case ...... Yes
              Hanger design run ..................... No
              Cut short included .................... No
              Thermal bowing included ............... No
              Include Bourdon rotational effect ..... No
              Pipe radius for Bourdon calculation ... Mean
              Occasional load analysis type ......... Nonlinear
              Non-linear analysis summary file ...... LERF_FRP_3m.LOG
              Use default load sequence ............. Yes
              Base load cases for nonlinear analysis
                                                        GR   = None
                                                        T3   = GR
                                                        E1   = P3
                                                        E2   = P3
                                                        E3   = P3
                                                        E4   = P3
                                                        E5   = P3
                                                        E6   = P3
                                                        E7   = P3
                                                        E8   = P3
                                                        W1   = P3
                                                        W2   = P3
                                                        W3   = P3
                                                        W4   = P3
                                                        P3   = T3
              Weight of contents included ........... Yes
              Fluid density factor for contents ..... 1.00
              Pressure stiffening case .............. None
              Hot modulus case ...................... None
              Pressure Extension..................... Yes
              Soil Stiffness ........................ Low
              Water elevation for buoyancy loads .... Not considered
              Wind analysis method .................. Projected
              Use corroded thickness in analysis .... No
              Rigid stiffness factor ................ 1000.0
              Support rigid stiffness (translation) . 0.100000E+11 lb/in
              Support rigid stiffness (rotation) .... 0.100000E+11 ft-lb/deg
              Anchor rigid stiffness (translation) .. 0.100000E+11 lb/in
              Anchor rigid stiffness (rotation) ..... 0.100000E+11 ft-lb/deg
              Remove Lift-Off Supports .............. No
```

CALCULATION SHEET

Project No. S54413.024	**Calculation No.** S54413.024-M-001	**Rev.** 0	**Page No.** 119 of 192
Title: LERF Basin 41 Buried Piping Analysis			
Prepared By: JD Williams	**Date:** 5/13/20	**Checked By:** JS Huisingh	**Date:** 5/13/20

```
-----------------------------------------------------------------------------------------------------------
LERF_FRP_3m
04/24/2020                                                    BENTLEY
12:36 PM                                                      AutoPIPE Advanced 11.01.00.24  RESULT PAGE 162
-----------------------------------------------------------------------------------------------------------

                                    CODE COMPLIANCE COMBINATIONS

  <Description>                                                                    f2     Allowable
  Combination              Category    Method       Case/Combination     Factor M/S  Factor     (psi)    D/A/P/C
  ------------------------ ----------- -------- ------------------------ ------ --- -------- ----------- -------
  GR{1}                    Sustain     Sum      GR[1]                      1.00        0.670 C Automatic Y Y Y Y

  GR+P1{1}                 Sustain     Sum      Max Long                   1.00        0.670 C Automatic Y Y Y Y
                                                Max Hoop                   1.00              L Automatic
                                                GR[1]                      1.00
                                                P1[1]                      1.00

  T1+P1{1}                 Expansion   Sum      T1[1]                      1.00              C Automatic Y Y Y N
                                                Max Long                   1.00              L Automatic
                                                Max Hoop                   1.00
                                                P1[1]                      1.00

  GR+E1{1}                 Occasion    Sum      GR[1]                      1.00        0.890 C Automatic Y Y Y N
                                                E1[1]                      1.00              L Automatic

  GR+P1+E1{1}              Occasion    Sum      Max Long                   1.00        0.890 C Automatic Y Y Y N
                                                Max Hoop                   1.00              L Automatic
                                                GR[1]                      1.00
                                                P1[1]                      1.00
                                                E1[1]                      1.00

  GR+E2{1}                 Occasion    Sum      GR[1]                      1.00        0.890 C Automatic Y Y Y N
                                                E2[1]                      1.00              L Automatic

  GR+P1+E2{1}              Occasion    Sum      Max Long                   1.00        0.890 C Automatic Y Y Y N
                                                Max Hoop                   1.00              L Automatic
                                                GR[1]                      1.00
                                                P1[1]                      1.00
                                                E2[1]                      1.00

  GR+E3{1}                 Occasion    Sum      GR[1]                      1.00        0.890 C Automatic Y Y Y N
                                                E3[1]                      1.00              L Automatic

  GR+P1+E3{1}              Occasion    Sum      Max Long                   1.00        0.890 C Automatic Y Y Y N
                                                Max Hoop                   1.00              L Automatic
                                                GR[1]                      1.00
                                                P1[1]                      1.00
                                                E3[1]                      1.00

  GR+E4{1}                 Occasion    Sum      GR[1]                      1.00        0.890 C Automatic Y Y Y N
                                                E4[1]                      1.00              L Automatic

  GR+P1+E4{1}              Occasion    Sum      Max Long                   1.00        0.890 C Automatic Y Y Y N
                                                Max Hoop                   1.00              L Automatic
                                                GR[1]                      1.00
                                                P1[1]                      1.00
                                                E4[1]                      1.00

  GR+E5{1}                 Occasion    Sum      GR[1]                      1.00        0.890 C Automatic Y Y Y N
                                                E5[1]                      1.00              L Automatic
```

CALCULATION SHEET

Project No. S54413.024	**Calculation No.** S54413.024-M-001	**Rev.** 0	**Page No.** 120 of 192
Title: LERF Basin 41 Buried Piping Analysis			
Prepared By: JD Williams	**Date:** 5/13/20	**Checked By:** JS Huisingh	**Date:** 5/13/20

```
-----------------------------------------------------------------------------------------------------------
LERF_FRP_3m
04/24/2020                                                    BENTLEY
12:36 PM                                                      AutoPIPE Advanced 11.01.00.24  RESULT PAGE 163
-----------------------------------------------------------------------------------------------------------
```

CODE COMPLIANCE COMBINATIONS

<Description> Combination	Category	Method	Case/Combination	Factor	M/S	f2 Factor	Allowable (psi)	D/A/P/C
GR+P1+E5{1}	Occasion	Sum	Max Long	1.00		0.890	C Automatic	Y Y Y N
			Max Hoop	1.00			L Automatic	
			GR[1]	1.00				
			P1[1]	1.00				
			E5[1]	1.00				
GR+E6{1}	Occasion	Sum	GR[1]	1.00		0.890	C Automatic	Y Y Y N
			E6[1]	1.00			L Automatic	
GR+P1+E6{1}	Occasion	Sum	Max Long	1.00		0.890	C Automatic	Y Y Y N
			Max Hoop	1.00			L Automatic	
			GR[1]	1.00				
			P1[1]	1.00				
			E6[1]	1.00				
GR+E7{1}	Occasion	Sum	GR[1]	1.00		0.890	C Automatic	Y Y Y N
			E7[1]	1.00			L Automatic	
GR+P1+E7{1}	Occasion	Sum	Max Long	1.00		0.890	C Automatic	Y Y Y N
			Max Hoop	1.00			L Automatic	
			GR[1]	1.00				
			P1[1]	1.00				
			E7[1]	1.00				
GR+E8{1}	Occasion	Sum	GR[1]	1.00		0.890	C Automatic	Y Y Y N
			E8[1]	1.00			L Automatic	
GR+P1+E8{1}	Occasion	Sum	Max Long	1.00		0.890	C Automatic	Y Y Y N
			Max Hoop	1.00			L Automatic	
			GR[1]	1.00				
			P1[1]	1.00				
			E8[1]	1.00				
GR+W1{1}	Occasion	Sum	GR[1]	1.00		0.890	C Automatic	Y Y Y N
			W1[1]	1.00			L Automatic	
GR+P1+W1{1}	Occasion	Sum	Max Long	1.00		0.890	C Automatic	Y Y Y N
			Max Hoop	1.00			L Automatic	
			GR[1]	1.00				
			P1[1]	1.00				
			W1[1]	1.00				
GR+W2{1}	Occasion	Sum	GR[1]	1.00		0.890	C Automatic	Y Y Y N
			W2[1]	1.00			L Automatic	
GR+P1+W2{1}	Occasion	Sum	Max Long	1.00		0.890	C Automatic	Y Y Y N
			Max Hoop	1.00			L Automatic	
			GR[1]	1.00				
			P1[1]	1.00				
			W2[1]	1.00				

CALCULATION SHEET

Project No. S54413.024	**Calculation No.** S54413.024-M-001	**Rev.** 0	**Page No.** 121 of 192
Title: LERF Basin 41 Buried Piping Analysis			
Prepared By: JD Williams	**Date:** 5/13/20	**Checked By:** JS Huisingh	**Date:** 5/13/20

```
-----------------------------------------------------------------------------------------------------------
LERF_FRP_3m
04/24/2020                                                    BENTLEY
12:36 PM                                                      AutoPIPE Advanced 11.01.00.24  RESULT PAGE 164
-----------------------------------------------------------------------------------------------------------
```

CODE COMPLIANCE COMBINATIONS

<Description> Combination	Category	Method	Case/Combination	Factor	M/S	f2 Factor	Allowable (psi)	D/A/P/C
GR+W3{1}	Occasion	Sum	GR[1]	1.00		0.890	C Automatic	Y Y Y N
			W3[1]	1.00			L Automatic	
GR+P1+W3{1}	Occasion	Sum	Max Long	1.00		0.890	C Automatic	Y Y Y N
			Max Hoop	1.00			L Automatic	
			GR[1]	1.00				
			P1[1]	1.00				
			W3[1]	1.00				
GR+W4{1}	Occasion	Sum	GR[1]	1.00		0.890	C Automatic	Y Y Y N
			W4[1]	1.00			L Automatic	
GR+P1+W4{1}	Occasion	Sum	Max Long	1.00		0.890	C Automatic	Y Y Y N
			Max Hoop	1.00			L Automatic	
			GR[1]	1.00				
			P1[1]	1.00				
			W4[1]	1.00				
GR+T1+P1{1}	Combined	Sum	GR[1]	1.00		0.830	C Automatic	Y Y Y Y
			T1[1]	1.00			L Automatic	
			Max Long	1.00				
			Max Hoop	1.00				
			P1[1]	1.00				
GR{2}	Sustain	Sum	GR[2]	1.00		0.670	C Automatic	Y Y Y Y
GR+P2{2}	Sustain	Sum	Max Long	1.00		0.670	C Automatic	Y Y Y N
			Max Hoop	1.00			L Automatic	
			GR[2]	1.00				
			P2[2]	1.00				
T2+P2{2}	Expansion	Sum	T2[2]	1.00			C Automatic	Y Y Y N
			Max Long	1.00			L Automatic	
			Max Hoop	1.00				
			P2[2]	1.00				
GR+E1{2}	Occasion	Sum	GR[2]	1.00		0.890	C Automatic	Y Y Y N
			E1[2]	1.00			L Automatic	
GR+P2+E1{2}	Occasion	Sum	Max Long	1.00		0.890	C Automatic	Y Y Y N
			Max Hoop	1.00			L Automatic	
			GR[2]	1.00				
			P2[2]	1.00				
			E1[2]	1.00				
GR+E2{2}	Occasion	Sum	GR[2]	1.00		0.890	C Automatic	Y Y Y N
			E2[2]	1.00			L Automatic	

CALCULATION SHEET

Project No. S54413.024	**Calculation No.** S54413.024-M-001	**Rev.** 0	**Page No.** 122 of 192
Title: LERF Basin 41 Buried Piping Analysis			
Prepared By: JD Williams	**Date:** 5/13/20	**Checked By:** JS Huisingh	**Date:** 5/13/20

```
-----------------------------------------------------------------------------------------------------------
LERF_FRP_3m
04/24/2020                                                    BENTLEY
12:36 PM                                                      AutoPIPE Advanced 11.01.00.24  RESULT PAGE 165
-----------------------------------------------------------------------------------------------------------
```

CODE COMPLIANCE COMBINATIONS

<Description> Combination	Category	Method	Case/Combination	Factor	M/S	f2 Factor	Allowable (psi)	D/A/P/C
GR+P2+E2{2}	Occasion	Sum	Max Long	1.00		0.890	C Automatic	Y Y Y N
			Max Hoop	1.00			L Automatic	
			GR[2]	1.00				
			P2[2]	1.00				
			E2[2]	1.00				
GR+E3{2}	Occasion	Sum	GR[2]	1.00		0.890	C Automatic	Y Y Y N
			E3[2]	1.00			L Automatic	
GR+P2+E3{2}	Occasion	Sum	Max Long	1.00		0.890	C Automatic	Y Y Y N
			Max Hoop	1.00			L Automatic	
			GR[2]	1.00				
			P2[2]	1.00				
			E3[2]	1.00				
GR+E4{2}	Occasion	Sum	GR[2]	1.00		0.890	C Automatic	Y Y Y N
			E4[2]	1.00			L Automatic	
GR+P2+E4{2}	Occasion	Sum	Max Long	1.00		0.890	C Automatic	Y Y Y N
			Max Hoop	1.00			L Automatic	
			GR[2]	1.00				
			P2[2]	1.00				
			E4[2]	1.00				
GR+E5{2}	Occasion	Sum	GR[2]	1.00		0.890	C Automatic	Y Y Y N
			E5[2]	1.00			L Automatic	
GR+P2+E5{2}	Occasion	Sum	Max Long	1.00		0.890	C Automatic	Y Y Y N
			Max Hoop	1.00			L Automatic	
			GR[2]	1.00				
			P2[2]	1.00				
			E5[2]	1.00				
GR+E6{2}	Occasion	Sum	GR[2]	1.00		0.890	C Automatic	Y Y Y N
			E6[2]	1.00			L Automatic	
GR+P2+E6{2}	Occasion	Sum	Max Long	1.00		0.890	C Automatic	Y Y Y N
			Max Hoop	1.00			L Automatic	
			GR[2]	1.00				
			P2[2]	1.00				
			E6[2]	1.00				
GR+E7{2}	Occasion	Sum	GR[2]	1.00		0.890	C Automatic	Y Y Y N
			E7[2]	1.00			L Automatic	
GR+P2+E7{2}	Occasion	Sum	Max Long	1.00		0.890	C Automatic	Y Y Y N
			Max Hoop	1.00			L Automatic	
			GR[2]	1.00				
			P2[2]	1.00				
			E7[2]	1.00				

CALCULATION SHEET

Project No. S54413.024	**Calculation No.** S54413.024-M-001	**Rev.** 0	**Page No.** 123 of 192
Title: LERF Basin 41 Buried Piping Analysis			
Prepared By: JD Williams	**Date:** 5/13/20	**Checked By:** JS Huisingh	**Date:** 5/13/20

```
-----------------------------------------------------------------------------------------------------------
LERF_FRP_3m
04/24/2020                                                    BENTLEY
12:36 PM                                                      AutoPIPE Advanced 11.01.00.24  RESULT PAGE 166
-----------------------------------------------------------------------------------------------------------
```

CODE COMPLIANCE COMBINATIONS

<Description> Combination	Category	Method	Case/Combination	Factor	M/S	f2 Factor	Allowable (psi)	D/A/P/C
GR+E8{2}	Occasion	Sum	GR[2]	1.00		0.890	C Automatic	Y Y Y N
			E8[2]	1.00			L Automatic	
GR+P2+E8{2}	Occasion	Sum	Max Long	1.00		0.890	C Automatic	Y Y Y N
			Max Hoop	1.00			L Automatic	
			GR[2]	1.00				
			P2[2]	1.00				
			E8[2]	1.00				
GR+W1{2}	Occasion	Sum	GR[2]	1.00		0.890	C Automatic	Y Y Y N
			W1[2]	1.00			L Automatic	
GR+P2+W1{2}	Occasion	Sum	Max Long	1.00		0.890	C Automatic	Y Y Y N
			Max Hoop	1.00			L Automatic	
			GR[2]	1.00				
			P2[2]	1.00				
			W1[2]	1.00				
GR+W2{2}	Occasion	Sum	GR[2]	1.00		0.890	C Automatic	Y Y Y N
			W2[2]	1.00			L Automatic	
GR+P2+W2{2}	Occasion	Sum	Max Long	1.00		0.890	C Automatic	Y Y Y N
			Max Hoop	1.00			L Automatic	
			GR[2]	1.00				
			P2[2]	1.00				
			W2[2]	1.00				
GR+W3{2}	Occasion	Sum	GR[2]	1.00		0.890	C Automatic	Y Y Y N
			W3[2]	1.00			L Automatic	
GR+P2+W3{2}	Occasion	Sum	Max Long	1.00		0.890	C Automatic	Y Y Y N
			Max Hoop	1.00			L Automatic	
			GR[2]	1.00				
			P2[2]	1.00				
			W3[2]	1.00				
GR+W4{2}	Occasion	Sum	GR[2]	1.00		0.890	C Automatic	Y Y Y N
			W4[2]	1.00			L Automatic	
GR+P2+W4{2}	Occasion	Sum	Max Long	1.00		0.890	C Automatic	Y Y Y N
			Max Hoop	1.00			L Automatic	
			GR[2]	1.00				
			P2[2]	1.00				
			W4[2]	1.00				
GR+T2+P2{2}	Combined	Sum	GR[2]	1.00		0.830	C Automatic	Y Y Y Y
			T2[2]	1.00			L Automatic	
			Max Long	1.00				
			Max Hoop	1.00				
			P2[2]	1.00				

CALCULATION SHEET

Project No. S54413.024	**Calculation No.** S54413.024-M-001	**Rev.** 0	**Page No.** 124 of 192
Title: LERF Basin 41 Buried Piping Analysis			
Prepared By: JD Williams	**Date:** 5/13/20	**Checked By:** JS Huisingh	**Date:** 5/13/20

```
-----------------------------------------------------------------------------------------------------------
LERF_FRP_3m
04/24/2020                                                    BENTLEY
12:36 PM                                                      AutoPIPE Advanced 11.01.00.24  RESULT PAGE 167
-----------------------------------------------------------------------------------------------------------
```

CODE COMPLIANCE COMBINATIONS

<Description> Combination	Category	Method	Case/Combination	Factor	M/S	f2 Factor	Allowable (psi)	D/A/P/C
GR{3}	Sustain	Sum	GR[3]	1.00		0.670	C Automatic	Y Y Y Y
GR+P3{3}	Sustain	Sum	Max Long	1.00		0.670	C Automatic	Y Y Y N
			Max Hoop	1.00			L Automatic	
			GR[3]	1.00				
			P3[3]	1.00				
T3+P3{3}	Expansion	Sum	T3[3]	1.00			C Automatic	Y Y Y N
			Max Long	1.00			L Automatic	
			Max Hoop	1.00				
			P3[3]	1.00				
GR+E1{3}	Occasion	Sum	GR[3]	1.00		0.890	C Automatic	Y Y Y N
			E1[3]	1.00			L Automatic	
GR+P3+E1{3}	Occasion	Sum	Max Long	1.00		0.890	C Automatic	Y Y Y N
			Max Hoop	1.00			L Automatic	
			GR[3]	1.00				
			P3[3]	1.00				
			E1[3]	1.00				
GR+E2{3}	Occasion	Sum	GR[3]	1.00		0.890	C Automatic	Y Y Y N
			E2[3]	1.00			L Automatic	
GR+P3+E2{3}	Occasion	Sum	Max Long	1.00		0.890	C Automatic	Y Y Y N
			Max Hoop	1.00			L Automatic	
			GR[3]	1.00				
			P3[3]	1.00				
			E2[3]	1.00				
GR+E3{3}	Occasion	Sum	GR[3]	1.00		0.890	C Automatic	Y Y Y N
			E3[3]	1.00			L Automatic	
GR+P3+E3{3}	Occasion	Sum	Max Long	1.00		0.890	C Automatic	Y Y Y N
			Max Hoop	1.00			L Automatic	
			GR[3]	1.00				
			P3[3]	1.00				
			E3[3]	1.00				
GR+E4{3}	Occasion	Sum	GR[3]	1.00		0.890	C Automatic	Y Y Y N
			E4[3]	1.00			L Automatic	
GR+P3+E4{3}	Occasion	Sum	Max Long	1.00		0.890	C Automatic	Y Y Y N
			Max Hoop	1.00			L Automatic	
			GR[3]	1.00				
			P3[3]	1.00				
			E4[3]	1.00				
GR+E5{3}	Occasion	Sum	GR[3]	1.00		0.890	C Automatic	Y Y Y N
			E5[3]	1.00			L Automatic	

CALCULATION SHEET

Project No. S54413.024	**Calculation No.** S54413.024-M-001	**Rev.** 0	**Page No.** 125 of 192
Title: LERF Basin 41 Buried Piping Analysis			
Prepared By: JD Williams	**Date:** 5/13/20	**Checked By:** JS Huisingh	**Date:** 5/13/20

```
LERF_FRP_3m
04/24/2020                                                    BENTLEY
12:36 PM                                                      AutoPIPE Advanced 11.01.00.24  RESULT PAGE 168
```

CODE COMPLIANCE COMBINATIONS

<Description> Combination	Category	Method	Case/Combination	Factor	M/S	f2 Factor	Allowable (psi)	D/A/P/C
GR+P3+E5{3}	Occasion	Sum	Max Long	1.00		0.890	C Automatic	Y Y Y N
			Max Hoop	1.00			L Automatic	
			GR[3]	1.00				
			P3[3]	1.00				
			E5[3]	1.00				
GR+E6{3}	Occasion	Sum	GR[3]	1.00		0.890	C Automatic	Y Y Y N
			E6[3]	1.00			L Automatic	
GR+P3+E6{3}	Occasion	Sum	Max Long	1.00		0.890	C Automatic	Y Y Y N
			Max Hoop	1.00			L Automatic	
			GR[3]	1.00				
			P3[3]	1.00				
			E6[3]	1.00				
GR+E7{3}	Occasion	Sum	GR[3]	1.00		0.890	C Automatic	Y Y Y N
			E7[3]	1.00			L Automatic	
GR+P3+E7{3}	Occasion	Sum	Max Long	1.00		0.890	C Automatic	Y Y Y N
			Max Hoop	1.00			L Automatic	
			GR[3]	1.00				
			P3[3]	1.00				
			E7[3]	1.00				
GR+E8{3}	Occasion	Sum	GR[3]	1.00		0.890	C Automatic	Y Y Y N
			E8[3]	1.00			L Automatic	
GR+P3+E8{3}	Occasion	Sum	Max Long	1.00		0.890	C Automatic	Y Y Y N
			Max Hoop	1.00			L Automatic	
			GR[3]	1.00				
			P3[3]	1.00				
			E8[3]	1.00				
GR+W1{3}	Occasion	Sum	GR[3]	1.00		0.890	C Automatic	Y Y Y N
			W1[3]	1.00			L Automatic	
GR+P3+W1{3}	Occasion	Sum	Max Long	1.00		0.890	C Automatic	Y Y Y N
			Max Hoop	1.00			L Automatic	
			GR[3]	1.00				
			P3[3]	1.00				
			W1[3]	1.00				
GR+W2{3}	Occasion	Sum	GR[3]	1.00		0.890	C Automatic	Y Y Y N
			W2[3]	1.00			L Automatic	
GR+P3+W2{3}	Occasion	Sum	Max Long	1.00		0.890	C Automatic	Y Y Y N
			Max Hoop	1.00			L Automatic	
			GR[3]	1.00				
			P3[3]	1.00				
			W2[3]	1.00				

CALCULATION SHEET

Project No. S54413.024	**Calculation No.** S54413.024-M-001	**Rev.** 0	**Page No.** 126 of 192
Title: LERF Basin 41 Buried Piping Analysis			
Prepared By: JD Williams	**Date:** 5/13/20	**Checked By:** JS Huisingh	**Date:** 5/13/20

```
-----------------------------------------------------------------------------------------------------------
LERF_FRP_3m
04/24/2020                                                    BENTLEY
12:36 PM                                                      AutoPIPE Advanced 11.01.00.24  RESULT PAGE 169
-----------------------------------------------------------------------------------------------------------

                                    CODE COMPLIANCE COMBINATIONS

  <Description>                                                                    f2     Allowable
  Combination              Category    Method       Case/Combination     Factor M/S  Factor     (psi)    D/A/P/C
  ------------------------ ----------- -------- ------------------------ ------ --- -------- ----------- -------
  GR+W3{3}                 Occasion    Sum      GR[3]                      1.00        0.890 C Automatic Y Y Y N
                                                W3[3]                      1.00              L Automatic

  GR+P3+W3{3}              Occasion    Sum      Max Long                   1.00        0.890 C Automatic Y Y Y N
                                                Max Hoop                   1.00              L Automatic
                                                GR[3]                      1.00
                                                P3[3]                      1.00
                                                W3[3]                      1.00

  GR+W4{3}                 Occasion    Sum      GR[3]                      1.00        0.890 C Automatic Y Y Y N
                                                W4[3]                      1.00              L Automatic

  GR+P3+W4{3}              Occasion    Sum      Max Long                   1.00        0.890 C Automatic Y Y Y N
                                                Max Hoop                   1.00              L Automatic
                                                GR[3]                      1.00
                                                P3[3]                      1.00
                                                W4[3]                      1.00

  GR+T3+P3{3}              Combined    Sum      GR[3]                      1.00        0.830 C Automatic Y Y Y Y
                                                T3[3]                      1.00              L Automatic
                                                Max Long                   1.00
                                                Max Hoop                   1.00
                                                P3[3]                      1.00


  Notes:

  Allowable: C=Circumferential or Hoop, L=Longitudinal

  D/A/P/C: [D]efault/[A]uto-Update/[P]rint options/[C]Consistent (Y=Yes, N=No)
```

CALCULATION SHEET

Project No. S54413.024	**Calculation No.** S54413.024-M-001	**Rev.** 0	**Page No.** 127 of 192
Title: LERF Basin 41 Buried Piping Analysis			
Prepared By: JD Williams	**Date:** 5/13/20	**Checked By:** JS Huisingh	**Date:** 5/13/20

```
-----------------------------------------------------------------------------------------------------------------
LERF_FRP_3m
04/24/2020                                                          BENTLEY
12:36 PM                                                            AutoPIPE Advanced 11.01.00.24  RESULT PAGE 170
-----------------------------------------------------------------------------------------------------------------

                              NON-CODE COMBINATIONS

  <Description>
  Combination                 Method       Case/Combination      Factor  D/A/P/C
  -----------------------     -------- ------------------------ ------  -------
  Gravity{1}                  Sum      GR[1]                      1.00  Y N N Y

  Thermal 1{1}                Sum      T1[1]                      1.00  Y N N N

  Static Seismic 1{1}         Sum      E1[1]                      1.00  Y N N N

  Static Seismic 2{1}         Sum      E2[1]                      1.00  Y N N N

  Static Seismic 3{1}         Sum      E3[1]                      1.00  Y N N N

  Static Seismic 4{1}         Sum      E4[1]                      1.00  Y N N N

  Static Seismic 5{1}         Sum      E5[1]                      1.00  Y N N N

  Static Seismic 6{1}         Sum      E6[1]                      1.00  Y N N N

  Static Seismic 7{1}         Sum      E7[1]                      1.00  Y N N N

  Static Seismic 8{1}         Sum      E8[1]                      1.00  Y N N N

  Wind 1{1}                   Sum      W1[1]                      1.00  Y N N N

  Wind 2{1}                   Sum      W2[1]                      1.00  Y N N N

  Wind 3{1}                   Sum      W3[1]                      1.00  Y N N N

  Wind 4{1}                   Sum      W4[1]                      1.00  Y N N N

  Pressure 1{1}               Sum      P1[1]                      1.00  Y N N N

  GP1{1}                      Sum      GR[1]                      1.00  Y N N Y
                                       P1[1]                      1.00

  GP1T1{1}                    Sum      GR[1]                      1.00  Y Y Y Y
                                       P1[1]                      1.00
                                       T1[1]                      1.00

  GP1T1E1{1}                  Sum      GR[1]                      1.00  Y Y Y Y
                                       P1[1]                      1.00
                                       T1[1]                      1.00
                                       E1[1]                      1.00

  GP1T1E2{1}                  Sum      GR[1]                      1.00  Y Y Y Y
                                       P1[1]                      1.00
                                       T1[1]                      1.00
                                       E2[1]                      1.00

  GP1T1E3{1}                  Sum      GR[1]                      1.00  Y Y Y Y
                                       P1[1]                      1.00
                                       T1[1]                      1.00
                                       E3[1]                      1.00
```

CALCULATION SHEET

Project No. S54413.024	**Calculation No.** S54413.024-M-001	**Rev.** 0	**Page No.** 128 of 192
Title: LERF Basin 41 Buried Piping Analysis			
Prepared By: JD Williams	**Date:** 5/13/20	**Checked By:** JS Huisingh	**Date:** 5/13/20

```
-----------------------------------------------------------------------------------------------------------
LERF_FRP_3m
04/24/2020                                                    BENTLEY
12:36 PM                                                      AutoPIPE Advanced 11.01.00.24  RESULT PAGE 171
-----------------------------------------------------------------------------------------------------------

                              NON-CODE COMBINATIONS

  <Description>
  Combination                 Method       Case/Combination      Factor  D/A/P/C
  ------------------------    -------- ------------------------ ------  -------
  GP1T1E4{1}                  Sum      GR[1]                      1.00  Y Y Y Y
                                       P1[1]                      1.00
                                       T1[1]                      1.00
                                       E4[1]                      1.00

  GP1T1E5{1}                  Sum      GR[1]                      1.00  Y Y Y Y
                                       P1[1]                      1.00
                                       T1[1]                      1.00
                                       E5[1]                      1.00

  GP1T1E6{1}                  Sum      GR[1]                      1.00  Y Y Y Y
                                       P1[1]                      1.00
                                       T1[1]                      1.00
                                       E6[1]                      1.00

  GP1T1E7{1}                  Sum      GR[1]                      1.00  Y Y Y Y
                                       P1[1]                      1.00
                                       T1[1]                      1.00
                                       E7[1]                      1.00

  GP1T1E8{1}                  Sum      GR[1]                      1.00  Y Y Y Y
                                       P1[1]                      1.00
                                       T1[1]                      1.00
                                       E8[1]                      1.00

  GP1T1W1{1}                  Sum      GR[1]                      1.00  Y Y Y Y
                                       P1[1]                      1.00
                                       T1[1]                      1.00
                                       W1[1]                      1.00

  GP1T1W2{1}                  Sum      GR[1]                      1.00  Y Y Y Y
                                       P1[1]                      1.00
                                       T1[1]                      1.00
                                       W2[1]                      1.00

  GP1T1W3{1}                  Sum      GR[1]                      1.00  Y Y Y Y
                                       P1[1]                      1.00
                                       T1[1]                      1.00
                                       W3[1]                      1.00

  GP1T1W4{1}                  Sum      GR[1]                      1.00  Y Y Y Y
                                       P1[1]                      1.00
                                       T1[1]                      1.00
                                       W4[1]                      1.00

  Gravity{2}                  Sum      GR[2]                      1.00  Y N N Y

  Thermal 2{2}                Sum      T2[2]                      1.00  Y N N N

  Static Seismic 1{2}         Sum      E1[2]                      1.00  Y N N N
```

CALCULATION SHEET

Project No. S54413.024	**Calculation No.** S54413.024-M-001	**Rev.** 0	**Page No.** 129 of 192
Title: LERF Basin 41 Buried Piping Analysis			
Prepared By: JD Williams	**Date:** 5/13/20	**Checked By:** JS Huisingh	**Date:** 5/13/20

```
-----------------------------------------------------------------------------------------------------------
LERF_FRP_3m
04/24/2020                                                    BENTLEY
12:36 PM                                                      AutoPIPE Advanced 11.01.00.24  RESULT PAGE 172
-----------------------------------------------------------------------------------------------------------

                              NON-CODE COMBINATIONS

  <Description>
  Combination                 Method       Case/Combination     Factor  D/A/P/C
  ------------------------    -------- ------------------------ ------  -------
  Static Seismic 2{2}         Sum      E2[2]                      1.00  Y N N N

  Static Seismic 3{2}         Sum      E3[2]                      1.00  Y N N N

  Static Seismic 4{2}         Sum      E4[2]                      1.00  Y N N N

  Static Seismic 5{2}         Sum      E5[2]                      1.00  Y N N N

  Static Seismic 6{2}         Sum      E6[2]                      1.00  Y N N N

  Static Seismic 7{2}         Sum      E7[2]                      1.00  Y N N N

  Static Seismic 8{2}         Sum      E8[2]                      1.00  Y N N N

  Wind 1{2}                   Sum      W1[2]                      1.00  Y N N N

  Wind 2{2}                   Sum      W2[2]                      1.00  Y N N N

  Wind 3{2}                   Sum      W3[2]                      1.00  Y N N N

  Wind 4{2}                   Sum      W4[2]                      1.00  Y N N N

  Pressure 2{2}               Sum      P2[2]                      1.00  Y N N N

  GT2{2}                      Sum      GR[2]                      1.00  Y N N Y
                                       T2[2]                      1.00

  GT2P2{2}                    Sum      GR[2]                      1.00  Y Y Y Y
                                       T2[2]                      1.00
                                       P2[2]                      1.00

  GT2P2E1{2}                  Sum      GR[2]                      1.00  Y Y Y Y
                                       T2[2]                      1.00
                                       P2[2]                      1.00
                                       E1[2]                      1.00

  GT2P2E2{2}                  Sum      GR[2]                      1.00  Y Y Y Y
                                       T2[2]                      1.00
                                       P2[2]                      1.00
                                       E2[2]                      1.00

  GT2P2E3{2}                  Sum      GR[2]                      1.00  Y Y Y Y
                                       T2[2]                      1.00
                                       P2[2]                      1.00
                                       E3[2]                      1.00

  GT2P2E4{2}                  Sum      GR[2]                      1.00  Y Y Y Y
                                       T2[2]                      1.00
                                       P2[2]                      1.00
                                       E4[2]                      1.00
```

CALCULATION SHEET

Project No. S54413.024	**Calculation No.** S54413.024-M-001	**Rev.** 0	**Page No.** 130 of 192
Title: LERF Basin 41 Buried Piping Analysis			
Prepared By: JD Williams	**Date:** 5/13/20	**Checked By:** JS Huisingh	**Date:** 5/13/20

```
-----------------------------------------------------------------------------------------------------------
LERF_FRP_3m
04/24/2020                                                    BENTLEY
12:36 PM                                                      AutoPIPE Advanced 11.01.00.24  RESULT PAGE 173
-----------------------------------------------------------------------------------------------------------

                              NON-CODE COMBINATIONS

  <Description>
  Combination                 Method       Case/Combination      Factor  D/A/P/C
  ------------------------    --------  ------------------------ ------  -------
  GT2P2E5{2}                  Sum       GR[2]                      1.00  Y Y Y Y
                                        T2[2]                      1.00
                                        P2[2]                      1.00
                                        E5[2]                      1.00

  GT2P2E6{2}                  Sum       GR[2]                      1.00  Y Y Y Y
                                        T2[2]                      1.00
                                        P2[2]                      1.00
                                        E6[2]                      1.00

  GT2P2E7{2}                  Sum       GR[2]                      1.00  Y Y Y Y
                                        T2[2]                      1.00
                                        P2[2]                      1.00
                                        E7[2]                      1.00

  GT2P2E8{2}                  Sum       GR[2]                      1.00  Y Y Y Y
                                        T2[2]                      1.00
                                        P2[2]                      1.00
                                        E8[2]                      1.00

  GT2P2W1{2}                  Sum       GR[2]                      1.00  Y Y Y Y
                                        T2[2]                      1.00
                                        P2[2]                      1.00
                                        W1[2]                      1.00

  GT2P2W2{2}                  Sum       GR[2]                      1.00  Y Y Y Y
                                        T2[2]                      1.00
                                        P2[2]                      1.00
                                        W2[2]                      1.00

  GT2P2W3{2}                  Sum       GR[2]                      1.00  Y Y Y Y
                                        T2[2]                      1.00
                                        P2[2]                      1.00
                                        W3[2]                      1.00

  GT2P2W4{2}                  Sum       GR[2]                      1.00  Y Y Y Y
                                        T2[2]                      1.00
                                        P2[2]                      1.00
                                        W4[2]                      1.00

  Gravity{3}                  Sum       GR[3]                      1.00  Y N N Y

  Thermal 3{3}                Sum       T3[3]                      1.00  Y N N N

  Static Seismic 1{3}         Sum       E1[3]                      1.00  Y N N N

  Static Seismic 2{3}         Sum       E2[3]                      1.00  Y N N N

  Static Seismic 3{3}         Sum       E3[3]                      1.00  Y N N N

  Static Seismic 4{3}         Sum       E4[3]                      1.00  Y N N N
```

CALCULATION SHEET

Project No. S54413.024	**Calculation No.** S54413.024-M-001	**Rev.** 0	**Page No.** 131 of 192
Title: LERF Basin 41 Buried Piping Analysis			
Prepared By: JD Williams	**Date:** 5/13/20	**Checked By:** JS Huisingh	**Date:** 5/13/20

```
-----------------------------------------------------------------------------------------------------------
LERF_FRP_3m
04/24/2020                                                    BENTLEY
12:36 PM                                                      AutoPIPE Advanced 11.01.00.24  RESULT PAGE 174
-----------------------------------------------------------------------------------------------------------

                              NON-CODE COMBINATIONS

  <Description>
  Combination                 Method       Case/Combination      Factor  D/A/P/C
  ------------------------    -------- ------------------------ ------  -------
  Static Seismic 5{3}         Sum      E5[3]                      1.00  Y N N N

  Static Seismic 6{3}         Sum      E6[3]                      1.00  Y N N N

  Static Seismic 7{3}         Sum      E7[3]                      1.00  Y N N N

  Static Seismic 8{3}         Sum      E8[3]                      1.00  Y N N N

    < 0.71, 0.00, 0.71>
  Wind 1{3}                   Sum      W1[3]                      1.00  Y N N N

    < -0.71, 0.00, -0.71>
  Wind 2{3}                   Sum      W2[3]                      1.00  Y N N N

    < -0.71, 0.00, 0.71>
  Wind 3{3}                   Sum      W3[3]                      1.00  Y N N N

    < 0.71, 0.00, -0.71>
  Wind 4{3}                   Sum      W4[3]                      1.00  Y N N N

  Pressure 3{3}               Sum      P3[3]                      1.00  Y N N N

  GT3{3}                      Sum      GR[3]                      1.00  Y N N Y
                                       T3[3]                      1.00

  GT3P3{3}                    Sum      GR[3]                      1.00  Y Y Y Y
                                       T3[3]                      1.00
                                       P3[3]                      1.00

  GT3P3E1{3}                  Sum      GR[3]                      1.00  Y Y Y Y
                                       T3[3]                      1.00
                                       P3[3]                      1.00
                                       E1[3]                      1.00

  GT3P3E2{3}                  Sum      GR[3]                      1.00  Y Y Y Y
                                       T3[3]                      1.00
                                       P3[3]                      1.00
                                       E2[3]                      1.00

  GT3P3E3{3}                  Sum      GR[3]                      1.00  Y Y Y Y
                                       T3[3]                      1.00
                                       P3[3]                      1.00
                                       E3[3]                      1.00

  GT3P3E4{3}                  Sum      GR[3]                      1.00  Y Y Y Y
                                       T3[3]                      1.00
                                       P3[3]                      1.00
                                       E4[3]                      1.00
```

CALCULATION SHEET

Project No. S54413.024	**Calculation No.** S54413.024-M-001	**Rev.** 0	**Page No.** 132 of 192
Title: LERF Basin 41 Buried Piping Analysis			
Prepared By: JD Williams	**Date:** 5/13/20	**Checked By:** JS Huisingh	**Date:** 5/13/20

```
-----------------------------------------------------------------------------------------------------------
LERF_FRP_3m
04/24/2020                                                    BENTLEY
12:36 PM                                                      AutoPIPE Advanced 11.01.00.24  RESULT PAGE 175
-----------------------------------------------------------------------------------------------------------

                              NON-CODE COMBINATIONS

  <Description>
  Combination                 Method       Case/Combination      Factor  D/A/P/C
  -----------------------     -------- ------------------------ ------  -------
  GT3P3E5{3}                  Sum      GR[3]                      1.00  Y Y Y Y
                                       T3[3]                      1.00
                                       P3[3]                      1.00
                                       E5[3]                      1.00

  GT3P3E6{3}                  Sum      GR[3]                      1.00  Y Y Y Y
                                       T3[3]                      1.00
                                       P3[3]                      1.00
                                       E6[3]                      1.00

  GT3P3E7{3}                  Sum      GR[3]                      1.00  Y Y Y Y
                                       T3[3]                      1.00
                                       P3[3]                      1.00
                                       E7[3]                      1.00

  GT3P3E8{3}                  Sum      GR[3]                      1.00  Y Y Y Y
                                       T3[3]                      1.00
                                       P3[3]                      1.00
                                       E8[3]                      1.00

  GT3P3W1{3}                  Sum      GR[3]                      1.00  Y Y Y Y
                                       T3[3]                      1.00
                                       P3[3]                      1.00
                                       W1[3]                      1.00

  GT3P3W2{3}                  Sum      GR[3]                      1.00  Y Y Y Y
                                       T3[3]                      1.00
                                       P3[3]                      1.00
                                       W2[3]                      1.00

  GT3P3W3{3}                  Sum      GR[3]                      1.00  Y Y Y Y
                                       T3[3]                      1.00
                                       P3[3]                      1.00
                                       W3[3]                      1.00

  GT3P3W4{3}                  Sum      GR[3]                      1.00  Y Y Y Y
                                       T3[3]                      1.00
                                       P3[3]                      1.00
                                       W4[3]                      1.00

    <OMEGA FACTOR OF 2.5 ON SEISMIC>
  GT1P1E4{1}+Omega            Sum      GR[1]                      1.00  N N Y Y
                                       P1[1]                      1.00
                                       T1[1]                      1.00
                                       E4[1]                      2.50


  Notes:

  D/A/P/C: [D]efault/[A]uto-Update/[P]rint options/[C]Consistent (Y=Yes, N=No)
```

CALCULATION SHEET

Project No. S54413.024	**Calculation No.** S54413.024-M-001	**Rev.** 0	**Page No.** 133 of 192
Title: LERF Basin 41 Buried Piping Analysis			
Prepared By: JD Williams	**Date:** 5/13/20	**Checked By:** JS Huisingh	**Date:** 5/13/20

```
-----------------------------------------------------------------------------------------------------------
LERF_FRP_3m
04/24/2020                                                          BENTLEY
12:36 PM                                                            AutoPIPE Advanced 11.01.00.24  RESULT PAGE 176
-----------------------------------------------------------------------------------------------------------


   CODE COMPLIANCE

   Sustained factor      - f2............. 0.67
   Sus. + thermal factor - f2............. 0.83
   Occasional factor     - f2............. 0.89
   Minimum stress ratio used in reports... 0.00
   Number of stress points per span ...... 0
   Include corrosion in stress calcs. .... Y
   Include torsion in code stress ........ Y
   Include axial force in code stress .... Y
   Set Hoop SIF=1 (Bends) ................ N
   Set sustained/occasional SIF = 1 ...... N
   Set sustained/occasional SIF = 0.75i .. N
   Disable auto code combinations ........ N
   Disable auto non-code combinations .... N
   No. of thermal ranges to report ....... 0
   Include Max Range combination ......... N
   Total stress .......................... Octahedral
   Direct shear .......................... None
   Longitudinal pressure calculation ..... PD/4t
```

CALCULATION SHEET

Project No. S54413.024	**Calculation No.** S54413.024-M-001	**Rev.** 0	**Page No.** 134 of 192
Title: LERF Basin 41 Buried Piping Analysis			
Prepared By: JD Williams	**Date:** 5/13/20	**Checked By:** JS Huisingh	**Date:** 5/13/20

LERF_FRP_3m
04/24/2020 BENTLEY
12:36 PM AutoPIPE Advanced 11.01.00.24 RESULT PAGE 177

R E S T R A I N T R E A C T I O N S

Point name	Load combination	FORCES (lbf) X	Y	Z	Result	MOMENTS (ft-lb) X	Y	Z	Result
A00	Anchor Tag No.: <None>								
	GP1T1{1}	-2160	-37	0	2161	0	0	-63	63
	GP1T1E1{1}	-2129	-34	5	2129	0	-8	-58	58
	GP1T1E2{1}	-2129	-34	-5	2129	0	8	-58	58
	GP1T1E3{1}	-2129	-41	5	2130	0	-8	-68	68
	GP1T1E4{1}	-2129	-41	-5	2130	0	8	-68	68
	GP1T1E5{1}	-2192	-34	5	2192	0	-8	-58	58
	GP1T1E6{1}	-2192	-34	-5	2192	0	8	-58	58
	GP1T1E7{1}	-2192	-41	5	2192	0	-8	-68	68
	GP1T1E8{1}	-2192	-41	-5	2192	0	8	-68	68
	GP1T1W1{1}	-2161	-37	0	2161	0	0	-63	63
	GP1T1W2{1}	-2160	-37	0	2161	0	0	-63	63
	GP1T1W3{1}	-2160	-37	0	2161	0	0	-63	63
	GP1T1W4{1}	-2160	-37	0	2161	0	0	-63	63
	GT2P2{2}	1106	-37	0	1107	0	0	-63	63
	GT2P2E1{2}	1137	-34	5	1138	0	-8	-58	58
	GT2P2E2{2}	1137	-34	-5	1138	0	8	-58	58
	GT2P2E3{2}	1137	-41	5	1138	0	-8	-68	68
	GT2P2E4{2}	1137	-41	-5	1138	0	8	-68	68
	GT2P2E5{2}	1075	-34	5	1075	0	-8	-58	58
	GT2P2E6{2}	1075	-34	-5	1075	0	8	-58	58
	GT2P2E7{2}	1075	-41	5	1075	0	-8	-68	68
	GT2P2E8{2}	1075	-41	-5	1075	0	8	-68	68
	GT2P2W1{2}	1106	-37	0	1107	0	0	-63	63
	GT2P2W2{2}	1106	-37	0	1107	0	0	-63	63
	GT2P2W3{2}	1106	-37	0	1107	0	0	-63	63
	GT2P2W4{2}	1106	-37	0	1107	0	0	-63	63
	GT3P3{3}	-2160	-37	0	2161	0	0	-63	63
	GT3P3E1{3}	-2129	-34	5	2129	0	-8	-58	58
	GT3P3E2{3}	-2129	-34	-5	2129	0	8	-58	58
	GT3P3E3{3}	-2129	-41	5	2130	0	-8	-68	68
	GT3P3E4{3}	-2129	-41	-5	2130	0	8	-68	68
	GT3P3E5{3}	-2192	-34	5	2192	0	-8	-58	58
	GT3P3E6{3}	-2192	-34	-5	2192	0	8	-58	58
	GT3P3E7{3}	-2192	-41	5	2192	0	-8	-68	68
	GT3P3E8{3}	-2192	-41	-5	2192	0	8	-68	68
	GT3P3W1{3}	-2160	-37	0	2161	0	0	-63	63
	GT3P3W2{3}	-2160	-37	0	2161	0	0	-63	63
	GT3P3W3{3}	-2160	-37	0	2161	0	0	-63	63
	GT3P3W4{3}	-2160	-37	0	2161	0	0	-63	63
	GT1P1E4{1}+Omega	-2082	-45	-12	2083	0	20	-76	78

CALCULATION SHEET

Project No. S54413.024	**Calculation No.** S54413.024-M-001	**Rev.** 0	**Page No.** 135 of 192
Title: LERF Basin 41 Buried Piping Analysis			
Prepared By: JD Williams	**Date:** 5/13/20	**Checked By:** JS Huisingh	**Date:** 5/13/20

```
-----------------------------------------------------------------------------------------------------------------
LERF_FRP_3m
04/24/2020                                                          BENTLEY
12:36 PM                                                            AutoPIPE Advanced 11.01.00.24  RESULT PAGE 178
-----------------------------------------------------------------------------------------------------------------
```

R E S T R A I N T R E A C T I O N S

Point name	Load combination	FORCES (lbf) X	Y	Z	Result	MOMENTS (ft-lb) X	Y	Z	Result
A01	Guide Tag No.: INT [ID: A03 1]								
	GP1T1{1}	0	-75	0	75	0	0	0	0
	GP1T1E1{1}	0	-69	9	69	0	0	0	0
	GP1T1E2{1}	0	-69	-9	69	0	0	0	0
	GP1T1E3{1}	0	-81	9	82	0	0	0	0
	GP1T1E4{1}	0	-81	-9	82	0	0	0	0
	GP1T1E5{1}	0	-69	9	69	0	0	0	0
	GP1T1E6{1}	0	-69	-9	69	0	0	0	0
	GP1T1E7{1}	0	-81	9	82	0	0	0	0
	GP1T1E8{1}	0	-81	-9	82	0	0	0	0
	GP1T1W1{1}	0	-75	0	75	0	0	0	0
	GP1T1W2{1}	0	-75	0	75	0	0	0	0
	GP1T1W3{1}	0	-75	0	75	0	0	0	0
	GP1T1W4{1}	0	-75	0	75	0	0	0	0
	GT2P2{2}	0	-75	0	75	0	0	0	0
	GT2P2E1{2}	0	-69	9	69	0	0	0	0
	GT2P2E2{2}	0	-69	-9	69	0	0	0	0
	GT2P2E3{2}	0	-81	9	82	0	0	0	0
	GT2P2E4{2}	0	-81	-9	82	0	0	0	0
	GT2P2E5{2}	0	-69	9	69	0	0	0	0
	GT2P2E6{2}	0	-69	-9	69	0	0	0	0
	GT2P2E7{2}	0	-81	9	82	0	0	0	0
	GT2P2E8{2}	0	-81	-9	82	0	0	0	0
	GT2P2W1{2}	0	-75	0	75	0	0	0	0
	GT2P2W2{2}	0	-75	0	75	0	0	0	0
	GT2P2W3{2}	0	-75	0	75	0	0	0	0
	GT2P2W4{2}	0	-75	0	75	0	0	0	0
	GT3P3{3}	0	-75	0	75	0	0	0	0
	GT3P3E1{3}	0	-69	9	69	0	0	0	0
	GT3P3E2{3}	0	-69	-9	69	0	0	0	0
	GT3P3E3{3}	0	-81	9	82	0	0	0	0
	GT3P3E4{3}	0	-81	-9	82	0	0	0	0
	GT3P3E5{3}	0	-69	9	69	0	0	0	0
	GT3P3E6{3}	0	-69	-9	69	0	0	0	0
	GT3P3E7{3}	0	-81	9	82	0	0	0	0
	GT3P3E8{3}	0	-81	-9	82	0	0	0	0
	GT3P3W1{3}	0	-75	0	75	0	0	0	0
	GT3P3W2{3}	0	-75	0	75	0	0	0	0
	GT3P3W3{3}	0	-75	0	75	0	0	0	0
	GT3P3W4{3}	0	-75	0	75	0	0	0	0
	GT1P1E4{1}+Omega	0	-90	-23	93	0	0	0	0

BREAK IN DATA

CALCULATION SHEET

Project No. S54413.024	**Calculation No.** S54413.024-M-001	**Rev.** 0	**Page No.** 136 of 192
Title: LERF Basin 41 Buried Piping Analysis			
Prepared By: JD Williams	**Date:** 5/13/20	**Checked By:** JS Huisingh	**Date:** 5/13/20

```
-----------------------------------------------------------------------------------------------------------------
LERF_FRP_3m
04/24/2020                                                          BENTLEY
12:36 PM                                                            AutoPIPE Advanced 11.01.00.24  RESULT PAGE 414
-----------------------------------------------------------------------------------------------------------------

                       ISO 14692 (2002 + 2005 addenda)  CODE COMPLIANCE
                        (Moments in ft-lb  )             (Stress in psi     )
 Point  Load comb.                          Str.    S.I.F   Bend.  Press. Tors.   Code   Code   Stress
 name   /Category                  Moments  Type   In  Out  stress stress stress stress Allow.   Ratio
 ------ ---------------------    --------- ----- ---- ---- ------ ------ ------ ------ ------  ------

 *** Segment A  begin ***

 A00    GR{1}                     I      63  Hoop 1.00 1.00             0      0      0   8423   0.00
        SUST                      O       0 Axial 1.00 1.00    697      0      0    697   4324   0.16^
                                  T       0           mps =  1.00    r =  1.03    qs =  12571

        GR+P1{1}                  I      63  Hoop 1.00 1.00          1808      0   1808   8423   0.21
        SUST                      O       0 Axial 1.00 1.00    697    904      0   1601   4442   0.36^
                                  T       0           mps =  1.00    r =  1.03    qs =  12571

        GR{2}                     I      63  Hoop 1.00 1.00             0      0      0   8423   0.00
        SUST                      O       0 Axial 1.00 1.00    697      0      0    697   4324   0.16^
                                  T       0           mps =  1.00    r =  1.03    qs =  12571

        GR+P2{2}                  I      63  Hoop 1.00 1.00             0      0      0   8423   0.00
        SUST                      O       0 Axial 1.00 1.00    697      0      0    697   4324   0.16^
                                  T       0           mps =  1.00    r =  1.03    qs =  12571

        GR{3}                     I      63  Hoop 1.00 1.00             0      0      0   8423   0.00
        SUST                      O       0 Axial 1.00 1.00    697      0      0    697   4324   0.16^
                                  T       0           mps =  1.00    r =  1.03    qs =  12571

        GR+P3{3}                  I      63  Hoop 1.00 1.00          1808      0   1808   8423   0.21
        SUST                      O       0 Axial 1.00 1.00    697    904      0   1601   4442   0.36^
                                  T       0           mps =  1.00    r =  1.03    qs =  12571

        T1+P1{1}                  I       0  Hoop 1.00 1.00          1808      0   1808
        DISP                      O       0 Axial 1.00 1.00      0    904      0    905
                                  T       0           mps =  1.00    r =  1.03    qs =  12571

        T2+P2{2}                  I       0  Hoop 1.00 1.00             0      0      0
        DISP                      O       0 Axial 1.00 1.00      0      0      0      0
                                  T       0           mps =  1.00    r =  1.03    qs =  12571

        T3+P3{3}                  I       0  Hoop 1.00 1.00          1808      0   1808
        DISP                      O       0 Axial 1.00 1.00      0    904      0    904
                                  T       0           mps =  1.00    r =  1.03    qs =  12571

        GR+E1{1}                  I      58  Hoop 1.00 1.00             0      0      0  11188   0.00
         OCC                      O       8 Axial 1.00 1.00    646      0      0    646   5744   0.11^
                                  T       0           mps =  1.00    r =  1.03    qs =  12571

        GR+P1+E1{1}               I      58  Hoop 1.00 1.00          1808      0   1808  11188   0.16
         OCC                      O       8 Axial 1.00 1.00    646    904      0   1550   5862   0.26^
                                  T       0           mps =  1.00    r =  1.03    qs =  12571

        GR+E2{1}                  I      58  Hoop 1.00 1.00             0      0      0  11188   0.00
         OCC                      O       8 Axial 1.00 1.00    646      0      0    646   5744   0.11^
                                  T       0           mps =  1.00    r =  1.03    qs =  12571
```

CALCULATION SHEET

Project No. S54413.024	**Calculation No.** S54413.024-M-001	**Rev.** 0	**Page No.** 137 of 192
Title: LERF Basin 41 Buried Piping Analysis			
Prepared By: JD Williams	**Date:** 5/13/20	**Checked By:** JS Huisingh	**Date:** 5/13/20

```
-----------------------------------------------------------------------------------------------------------------
LERF_FRP_3m
04/24/2020                                                          BENTLEY
12:36 PM                                                            AutoPIPE Advanced 11.01.00.24  RESULT PAGE 415
-----------------------------------------------------------------------------------------------------------------

                      ISO 14692 (2002 + 2005 addenda)  CODE COMPLIANCE
                       (Moments in ft-lb  )             (Stress in psi     )
 Point  Load comb.                          Str.    S.I.F   Bend.  Press. Tors.   Code   Code   Stress
 name   /Category                  Moments  Type   In  Out  stress stress stress stress Allow.   Ratio
 ------ ---------------------    --------- ----- ---- ---- ------ ------ ------ ------ ------  ------

        GR+P1+E2{1}               I      58  Hoop 1.00 1.00          1808      0   1808  11188   0.16
         OCC                      O       8 Axial 1.00 1.00    646    904      0   1550   5862   0.26^
                                  T       0           mps =  1.00    r =  1.03    qs =  12571

        GR+E3{1}                  I      68  Hoop 1.00 1.00             0      0      0  11188   0.00
         OCC                      O       8 Axial 1.00 1.00    759      0      0    759   5744   0.13^
                                  T       0           mps =  1.00    r =  1.03    qs =  12571

        GR+P1+E3{1}               I      68  Hoop 1.00 1.00          1808      0   1808  11188   0.16
         OCC                      O       8 Axial 1.00 1.00    759    904      0   1663   5862   0.28^
                                  T       0           mps =  1.00    r =  1.03    qs =  12571

        GR+E4{1}                  I      68  Hoop 1.00 1.00             0      0      0  11188   0.00
         OCC                      O       8 Axial 1.00 1.00    759      0      0    759   5744   0.13^
                                  T       0           mps =  1.00    r =  1.03    qs =  12571

        GR+P1+E4{1}               I      68  Hoop 1.00 1.00          1808      0   1808  11188   0.16
         OCC                      O       8 Axial 1.00 1.00    759    904      0   1663   5862   0.28^
                                  T       0           mps =  1.00    r =  1.03    qs =  12571

        GR+E5{1}                  I      58  Hoop 1.00 1.00             0      0      0  11188   0.00
         OCC                      O       8 Axial 1.00 1.00    646      0      0    646   5744   0.11^
                                  T       0           mps =  1.00    r =  1.03    qs =  12571

        GR+P1+E5{1}               I      58  Hoop 1.00 1.00          1808      0   1808  11188   0.16
         OCC                      O       8 Axial 1.00 1.00    646    904      0   1550   5862   0.26^
                                  T       0           mps =  1.00    r =  1.03    qs =  12571

        GR+E6{1}                  I      58  Hoop 1.00 1.00             0      0      0  11188   0.00
         OCC                      O       8 Axial 1.00 1.00    646      0      0    646   5744   0.11^
                                  T       0           mps =  1.00    r =  1.03    qs =  12571

        GR+P1+E6{1}               I      58  Hoop 1.00 1.00          1808      0   1808  11188   0.16
         OCC                      O       8 Axial 1.00 1.00    646    904      0   1550   5862   0.26^
                                  T       0           mps =  1.00    r =  1.03    qs =  12571

        GR+E7{1}                  I      68  Hoop 1.00 1.00             0      0      0  11188   0.00
         OCC                      O       8 Axial 1.00 1.00    759      0      0    759   5744   0.13^
                                  T       0           mps =  1.00    r =  1.03    qs =  12571

        GR+P1+E7{1}               I      68  Hoop 1.00 1.00          1808      0   1808  11188   0.16
         OCC                      O       8 Axial 1.00 1.00    759    904      0   1663   5862   0.28^
                                  T       0           mps =  1.00    r =  1.03    qs =  12571

        GR+E8{1}                  I      68  Hoop 1.00 1.00             0      0      0  11188   0.00
         OCC                      O       8 Axial 1.00 1.00    759      0      0    759   5744   0.13^
                                  T       0           mps =  1.00    r =  1.03    qs =  12571
```

BREAK IN DATA

CALCULATION SHEET

Project No. S54413.024	**Calculation No.** S54413.024-M-001	**Rev.** 0	**Page No.** 138 of 192
Title: LERF Basin 41 Buried Piping Analysis			
Prepared By: JD Williams	**Date:** 5/13/20	**Checked By:** JS Huisingh	**Date:** 5/13/20

```
-----------------------------------------------------------------------------------------------------------------
LERF_FRP_3m
04/24/2020                                                          BENTLEY
12:36 PM                                                            AutoPIPE Advanced 11.01.00.24  RESULT PAGE****
-----------------------------------------------------------------------------------------------------------------

                       ISO 14692 (2002 + 2005 addenda)  CODE COMPLIANCE
                        (Moments in ft-lb  )             (Stress in psi     )
 Point  Load comb.                          Str.    S.I.F   Bend.  Press. Tors.   Code   Code   Stress
 name   /Category                  Moments  Type   In  Out  stress stress stress stress Allow.   Ratio
 ------ ---------------------    --------- ----- ---- ---- ------ ------ ------ ------ ------  ------

        GR+P1+E8{1}               I      17  Hoop 1.00 1.00      0   1416     26   1417  11188   0.13
         OCC                      O       1 Axial 1.00 1.00     60    708     26    770   5836   0.13^
                                  T      10           mps =  1.00    r =  1.03    qs =  12571

        GR+W1{1}                  I      15  Hoop 1.00 1.00      0      0     29     59  11188   0.01
         OCC                      O       0 Axial 1.00 1.00     55      0     29     81   5748   0.01^
                                  T      11           mps =  1.00    r =  1.03    qs =  12571

        GR+P1+W1{1}               I      15  Hoop 1.00 1.00      0   1416     28   1417  11188   0.13
         OCC                      O       2 Axial 1.00 1.00     56    708     28    766   5836   0.13^
                                  T      10           mps =  1.00    r =  1.03    qs =  12571

        GR+W2{1}                  I      15  Hoop 1.00 1.00      0      0     25     50  11188   0.00
         OCC                      O       0 Axial 1.00 1.00     56      0     25     75   5747   0.01^
                                  T       9           mps =  1.00    r =  1.03    qs =  12571

        GR+P1+W2{1}               I      15  Hoop 1.00 1.00      0   1416     24   1417  11188   0.13
         OCC                      O       2 Axial 1.00 1.00     56    708     24    766   5836   0.13^
                                  T       9           mps =  1.00    r =  1.03    qs =  12571

        GR+W3{1}                  I      15  Hoop 1.00 1.00      0      0     42     83  11188   0.01
         OCC                      O      17 Axial 1.00 1.00     83      0     42    118   5749   0.02^
                                  T      15           mps =  1.00    r =  1.03    qs =  12571

        GR+P1+W3{1}               I      15  Hoop 1.00 1.00      0   1416     40   1418  11188   0.13
         OCC                      O      15 Axial 1.00 1.00     78    708     40    790   5836   0.14^
                                  T      15           mps =  1.00    r =  1.03    qs =  12571

        GR+W4{1}                  I      16  Hoop 1.00 1.00      0      0     11     22  11188   0.00
         OCC                      O       4 Axial 1.00 1.00     59      0     11     63   5745   0.01^
                                  T       4           mps =  1.00    r =  1.03    qs =  12571

        GR+P1+W4{1}               I      16  Hoop 1.00 1.00      0   1416     10   1416  11188   0.13
         OCC                      O       2 Axial 1.00 1.00     57    708     10    766   5836   0.13^
                                  T       4           mps =  1.00    r =  1.03    qs =  12571

        GR+E1{2}                  I      14  Hoop 1.00 1.00      0      0     27     55  11188   0.00
         OCC                      O       1 Axial 1.00 1.00     51      0     27     75   5748   0.01^
                                  T      10           mps =  1.00    r =  1.03    qs =  12571

        GR+P2+E1{2}               I      14  Hoop 1.00 1.00      0      0     27     55  11188   0.00
         OCC                      O       1 Axial 1.00 1.00     51      0     27     75   5748   0.01^
                                  T      10           mps =  1.00    r =  1.03    qs =  12571

        GR+E2{2}                  I      15  Hoop 1.00 1.00      0      0      4      8  11188   0.00
         OCC                      O       7 Axial 1.00 1.00     59      0      4     60   5745   0.01^
                                  T       2           mps =  1.00    r =  1.03    qs =  12571
```

CALCULATION SHEET

Project No. S54413.024	**Calculation No.** S54413.024-M-001	**Rev.** 0	**Page No.** 139 of 192
Title: LERF Basin 41 Buried Piping Analysis			
Prepared By: JD Williams	**Date:** 5/13/20	**Checked By:** JS Huisingh	**Date:** 5/13/20

```
-----------------------------------------------------------------------------------------------------------------
LERF_FRP_3m
04/24/2020                                                          BENTLEY
12:36 PM                                                            AutoPIPE Advanced 11.01.00.24  RESULT PAGE****
-----------------------------------------------------------------------------------------------------------------

                       ISO 14692 (2002 + 2005 addenda)  CODE COMPLIANCE
                        (Moments in ft-lb  )             (Stress in psi     )
 Point  Load comb.                          Str.    S.I.F   Bend.  Press. Tors.   Code   Code   Stress
 name   /Category                  Moments  Type   In  Out  stress stress stress stress Allow.   Ratio
 ------ ---------------------    --------- ----- ---- ---- ------ ------ ------ ------ ------  ------

        GR+P2+E2{2}               I      15  Hoop 1.00 1.00      0      0      4      8  11188   0.00
         OCC                      O       7 Axial 1.00 1.00     59      0      4     60   5745   0.01^
                                  T       2           mps =  1.00    r =  1.03    qs =  12571

        GR+E3{2}                  I      16  Hoop 1.00 1.00      0      0     32     64  11188   0.01
         OCC                      O       1 Axial 1.00 1.00     60      0     32     88   5748   0.02^
                                  T      12           mps =  1.00    r =  1.03    qs =  12571

        GR+P2+E3{2}               I      16  Hoop 1.00 1.00      0      0     32     64  11188   0.01
         OCC                      O       1 Axial 1.00 1.00     60      0     32     88   5748   0.02^
                                  T      12           mps =  1.00    r =  1.03    qs =  12571

        GR+E4{2}                  I      17  Hoop 1.00 1.00      0      0      0      1  11188   0.00
         OCC                      O       7 Axial 1.00 1.00     67      0      0     67   5744   0.01^
                                  T       0           mps =  1.00    r =  1.03    qs =  12571

        GR+P2+E4{2}               I      17  Hoop 1.00 1.00      0      0      0      1  11188   0.00
         OCC                      O       7 Axial 1.00 1.00     67      0      0     67   5744   0.01^
                                  T       0           mps =  1.00    r =  1.03    qs =  12571

        GR+E5{2}                  I      13  Hoop 1.00 1.00      0      0     54    108  11188   0.01
         OCC                      O      16 Axial 1.00 1.00     76      0     54    132   5751   0.02^
                                  T      20           mps =  1.00    r =  1.03    qs =  12571

        GR+P2+E5{2}               I      13  Hoop 1.00 1.00      0      0     54    108  11188   0.01
         OCC                      O      16 Axial 1.00 1.00     76      0     54    132   5751   0.02^
                                  T      20           mps =  1.00    r =  1.03    qs =  12571

        GR+E6{2}                  I      14  Hoop 1.00 1.00      0      0     23     47  11188   0.00
         OCC                      O       1 Axial 1.00 1.00     51      0     23     69   5747   0.01^
                                  T       9           mps =  1.00    r =  1.03    qs =  12571

        GR+P2+E6{2}               I      14  Hoop 1.00 1.00      0      0     23     47  11188   0.00
         OCC                      O       1 Axial 1.00 1.00     51      0     23     69   5747   0.01^
                                  T       9           mps =  1.00    r =  1.03    qs =  12571

        GR+E7{2}                  I      16  Hoop 1.00 1.00      0      0     59    117  11188   0.01
         OCC                      O      16 Axial 1.00 1.00     82      0     59    143   5752   0.02^
                                  T      21           mps =  1.00    r =  1.03    qs =  12571

        GR+P2+E7{2}               I      16  Hoop 1.00 1.00      0      0     59    117  11188   0.01
         OCC                      O      16 Axial 1.00 1.00     82      0     59    143   5752   0.02^
                                  T      21           mps =  1.00    r =  1.03    qs =  12571

        GR+E8{2}                  I      17  Hoop 1.00 1.00      0      0     28     56  11188   0.00
         OCC                      O       1 Axial 1.00 1.00     60      0     28     82   5748   0.01^
                                  T      10           mps =  1.00    r =  1.03    qs =  12571
```

CALCULATION SHEET

Project No. S54413.024	**Calculation No.** S54413.024-M-001	**Rev.** 0	**Page No.** 140 of 192
Title: LERF Basin 41 Buried Piping Analysis			
Prepared By: JD Williams	**Date:** 5/13/20	**Checked By:** JS Huisingh	**Date:** 5/13/20

```
-----------------------------------------------------------------------------------------------------------------
LERF_FRP_3m
04/24/2020                                                          BENTLEY
12:36 PM                                                            AutoPIPE Advanced 11.01.00.24  RESULT PAGE****
-----------------------------------------------------------------------------------------------------------------

                       ISO 14692 (2002 + 2005 addenda)  CODE COMPLIANCE
                        (Moments in ft-lb  )             (Stress in psi     )
 Point  Load comb.                          Str.    S.I.F   Bend.  Press. Tors.   Code   Code   Stress
 name   /Category                  Moments  Type   In  Out  stress stress stress stress Allow.   Ratio
 ------ ---------------------    --------- ----- ---- ---- ------ ------ ------ ------ ------  ------

        GR+P2+E8{2}               I      17  Hoop 1.00 1.00      0      0     28     56  11188   0.00
         OCC                      O       1 Axial 1.00 1.00     60      0     28     82   5748   0.01^
                                  T      10           mps =  1.00    r =  1.03    qs =  12571

        GR+W1{2}                  I      15  Hoop 1.00 1.00      0      0     29     58  11188   0.01
         OCC                      O       0 Axial 1.00 1.00     55      0     29     81   5748   0.01^
                                  T      11           mps =  1.00    r =  1.03    qs =  12571

        GR+P2+W1{2}               I      15  Hoop 1.00 1.00      0      0     29     58  11188   0.01
         OCC                      O       0 Axial 1.00 1.00     55      0     29     81   5748   0.01^
                                  T      11           mps =  1.00    r =  1.03    qs =  12571

        GR+W2{2}                  I      15  Hoop 1.00 1.00      0      0     26     51  11188   0.00
         OCC                      O       1 Axial 1.00 1.00     56      0     26     76   5747   0.01^
                                  T       9           mps =  1.00    r =  1.03    qs =  12571

        GR+P2+W2{2}               I      15  Hoop 1.00 1.00      0      0     26     51  11188   0.00
         OCC                      O       1 Axial 1.00 1.00     56      0     26     76   5747   0.01^
                                  T       9           mps =  1.00    r =  1.03    qs =  12571

        GR+W3{2}                  I      15  Hoop 1.00 1.00      0      0     44     87  11188   0.01
         OCC                      O       4 Axial 1.00 1.00     56      0     44    103   5750   0.02^
                                  T      16           mps =  1.00    r =  1.03    qs =  12571

        GR+P2+W3{2}               I      15  Hoop 1.00 1.00      0      0     44     87  11188   0.01
         OCC                      O       4 Axial 1.00 1.00     56      0     44    103   5750   0.02^
                                  T      16           mps =  1.00    r =  1.03    qs =  12571

        GR+W4{2}                  I      16  Hoop 1.00 1.00      0      0     13     25  11188   0.00
         OCC                      O      18 Axial 1.00 1.00     86      0     13     89   5746   0.02^
                                  T       5           mps =  1.00    r =  1.03    qs =  12571

        GR+P2+W4{2}               I      16  Hoop 1.00 1.00      0      0     13     25  11188   0.00
         OCC                      O      18 Axial 1.00 1.00     86      0     13     89   5746   0.02^
                                  T       5           mps =  1.00    r =  1.03    qs =  12571

        GR+E1{3}                  I      14  Hoop 1.00 1.00      0      0     26     53  11188   0.00
         OCC                      O       1 Axial 1.00 1.00     51      0     26     73   5747   0.01^
                                  T      10           mps =  1.00    r =  1.03    qs =  12571

        GR+P3+E1{3}               I      14  Hoop 1.00 1.00      0   4248     24   4248  11188   0.38^
         OCC                      O       5 Axial 1.00 1.00     54   2124     24   2179   6020   0.36
                                  T       9           mps =  1.00    r =  1.03    qs =  12571

        GR+E2{3}                  I      15  Hoop 1.00 1.00      0      0      4      9  11188   0.00
         OCC                      O      16 Axial 1.00 1.00     80      0      4     81   5745   0.01^
                                  T       2           mps =  1.00    r =  1.03    qs =  12571
```

CALCULATION SHEET

Project No. S54413.024	**Calculation No.** S54413.024-M-001	**Rev.** 0	**Page No.** 141 of 192
Title: LERF Basin 41 Buried Piping Analysis			
Prepared By: JD Williams	**Date:** 5/13/20	**Checked By:** JS Huisingh	**Date:** 5/13/20

```
-----------------------------------------------------------------------------------------------------------------
LERF_FRP_3m
04/24/2020                                                          BENTLEY
12:36 PM                                                            AutoPIPE Advanced 11.01.00.24  RESULT PAGE****
-----------------------------------------------------------------------------------------------------------------

                       ISO 14692 (2002 + 2005 addenda)  CODE COMPLIANCE
                        (Moments in ft-lb  )             (Stress in psi     )
 Point  Load comb.                          Str.    S.I.F   Bend.  Press. Tors.   Code   Code   Stress
 name   /Category                  Moments  Type   In  Out  stress stress stress stress Allow.   Ratio
 ------ ---------------------    --------- ----- ---- ---- ------ ------ ------ ------ ------  ------

        GR+P3+E2{3}               I      15  Hoop 1.00 1.00      0   4248      6   4248  11188   0.38^
         OCC                      O      10 Axial 1.00 1.00     65   2124      6   2189   6020   0.36
                                  T       2           mps =  1.00    r =  1.03    qs =  12571

        GR+E3{3}                  I      16  Hoop 1.00 1.00      0      0     31     62  11188   0.01
         OCC                      O       1 Axial 1.00 1.00     60      0     31     86   5748   0.01^
                                  T      11           mps =  1.00    r =  1.03    qs =  12571

        GR+P3+E3{3}               I      17  Hoop 1.00 1.00      0   4248     29   4248  11188   0.38^
         OCC                      O       5 Axial 1.00 1.00     63   2124     29   2188   6020   0.36
                                  T      11           mps =  1.00    r =  1.03    qs =  12571

        GR+E4{3}                  I      17  Hoop 1.00 1.00      0      0      0      0  11188   0.00
         OCC                      O      16 Axial 1.00 1.00     87      0      0     87   5744   0.02^
                                  T       0           mps =  1.00    r =  1.03    qs =  12571

        GR+P3+E4{3}               I      17  Hoop 1.00 1.00      0   4248      2   4248  11188   0.38^
         OCC                      O      10 Axial 1.00 1.00     73   2124      2   2196   6020   0.36
                                  T       1           mps =  1.00    r =  1.03    qs =  12571

        GR+E5{3}                  I      13  Hoop 1.00 1.00      0      0     54    108  11188   0.01
         OCC                      O       7 Axial 1.00 1.00     56      0     54    121   5751   0.02^
                                  T      20           mps =  1.00    r =  1.03    qs =  12571

        GR+P3+E5{3}               I      13  Hoop 1.00 1.00      0   4248     52   4249  11188   0.38^
         OCC                      O       1 Axial 1.00 1.00     49   2124     52   2175   6021   0.36
                                  T      19           mps =  1.00    r =  1.03    qs =  12571

        GR+E6{3}                  I      14  Hoop 1.00 1.00      0      0     22     44  11188   0.00
         OCC                      O       1 Axial 1.00 1.00     51      0     22     68   5747   0.01^
                                  T       8           mps =  1.00    r =  1.03    qs =  12571

        GR+P3+E6{3}               I      14  Hoop 1.00 1.00      0   4248     20   4248  11188   0.38^
         OCC                      O       5 Axial 1.00 1.00     55   2124     20   2179   6020   0.36
                                  T       7           mps =  1.00    r =  1.03    qs =  12571

        GR+E7{3}                  I      16  Hoop 1.00 1.00      0      0     58    116  11188   0.01
         OCC                      O       7 Axial 1.00 1.00     64      0     58    133   5752   0.02^
                                  T      21           mps =  1.00    r =  1.03    qs =  12571

        GR+P3+E7{3}               I      16  Hoop 1.00 1.00      0   4248     56   4249  11188   0.38^
         OCC                      O       1 Axial 1.00 1.00     58   2124     56   2185   6021   0.36
                                  T      21           mps =  1.00    r =  1.03    qs =  12571

        GR+E8{3}                  I      17  Hoop 1.00 1.00      0      0     27     53  11188   0.00
         OCC                      O       1 Axial 1.00 1.00     60      0     27     81   5748   0.01^
                                  T      10           mps =  1.00    r =  1.03    qs =  12571
```

CALCULATION SHEET

Project No. S54413.024	**Calculation No.** S54413.024-M-001	**Rev.** 0	**Page No.** 142 of 192
Title: LERF Basin 41 Buried Piping Analysis			
Prepared By: JD Williams	**Date:** 5/13/20	**Checked By:** JS Huisingh	**Date:** 5/13/20

```
-----------------------------------------------------------------------------------------------------------------
LERF_FRP_3m
04/24/2020                                                          BENTLEY
12:36 PM                                                            AutoPIPE Advanced 11.01.00.24  RESULT PAGE****
-----------------------------------------------------------------------------------------------------------------

                       ISO 14692 (2002 + 2005 addenda)  CODE COMPLIANCE
                        (Moments in ft-lb  )             (Stress in psi     )
 Point  Load comb.                          Str.    S.I.F   Bend.  Press. Tors.   Code   Code   Stress
 name   /Category                  Moments  Type   In  Out  stress stress stress stress Allow.   Ratio
 ------ ---------------------    --------- ----- ---- ---- ------ ------ ------ ------ ------  ------

        GR+P3+E8{3}               I      17  Hoop 1.00 1.00      0   4248     25   4248  11188   0.38^
         OCC                      O       5 Axial 1.00 1.00     63   2124     25   2188   6020   0.36
                                  T       9           mps =  1.00    r =  1.03    qs =  12571

        GR+W1{3}                  I      15  Hoop 1.00 1.00      0      0     29     57  11188   0.01
         OCC                      O       2 Axial 1.00 1.00     56      0     29     80   5748   0.01^
                                  T      11           mps =  1.00    r =  1.03    qs =  12571

        GR+P3+W1{3}               I      15  Hoop 1.00 1.00      0   4248     27   4248  11188   0.38^
         OCC                      O       5 Axial 1.00 1.00     58   2124     27   2183   6020   0.36
                                  T      10           mps =  1.00    r =  1.03    qs =  12571

        GR+W2{3}                  I      15  Hoop 1.00 1.00      0      0     25     50  11188   0.00
         OCC                      O       0 Axial 1.00 1.00     56      0     25     75   5747   0.01^
                                  T       9           mps =  1.00    r =  1.03    qs =  12571

        GR+P3+W2{3}               I      15  Hoop 1.00 1.00      0   4248     23   4248  11188   0.38^
         OCC                      O       6 Axial 1.00 1.00     60   2124     23   2185   6020   0.36
                                  T       8           mps =  1.00    r =  1.03    qs =  12571

        GR+W3{3}                  I      15  Hoop 1.00 1.00      0      0     42     83  11188   0.01
         OCC                      O      18 Axial 1.00 1.00     85      0     42    119   5749   0.02^
                                  T      15           mps =  1.00    r =  1.03    qs =  12571

        GR+P3+W3{3}               I      15  Hoop 1.00 1.00      0   4248     40   4248  11188   0.38^
         OCC                      O      12 Axial 1.00 1.00     69   2124     40   2194   6021   0.36
                                  T      15           mps =  1.00    r =  1.03    qs =  12571

        GR+W4{3}                  I      16  Hoop 1.00 1.00      0      0     11     22  11188   0.00
         OCC                      O       4 Axial 1.00 1.00     59      0     11     63   5745   0.01^
                                  T       4           mps =  1.00    r =  1.03    qs =  12571

        GR+P3+W4{3}               I      16  Hoop 1.00 1.00      0   4248      9   4248  11188   0.38^
         OCC                      O       2 Axial 1.00 1.00     57   2124      9   2181   6020   0.36
                                  T       3           mps =  1.00    r =  1.03    qs =  12571

        GR+T1+P1{1}               I      15  Hoop 1.00 1.00      0   1416     23   1417  10434   0.14
        COMB                      O       9 Axial 1.00 1.00     64    708     23    773   5449   0.14^
                                  T       8           mps =  1.00    r =  1.03    qs =  12571

        GR+T2+P2{2}               I      15  Hoop 1.00 1.00      0      0     30     61  10434   0.01
        COMB                      O       9 Axial 1.00 1.00     65      0     30     89   5361   0.02^
                                  T      11           mps =  1.00    r =  1.03    qs =  12571

        GR+T3+P3{3}               I      15  Hoop 1.00 1.00      0   4248     24   4248  10434   0.41^
        COMB                      O       9 Axial 1.00 1.00     65   2124     24   2190   5633   0.39
                                  T       9           mps =  1.00    r =  1.03    qs =  12571

 *** Segment AD end   ***
```

CALCULATION SHEET

Project No. S54413.024	**Calculation No.** S54413.024-M-001	**Rev.** 0	**Page No.** 143 of 192
Title: LERF Basin 41 Buried Piping Analysis			
Prepared By: JD Williams	**Date:** 5/13/20	**Checked By:** JS Huisingh	**Date:** 5/13/20

```
-----------------------------------------------------------------------------------------------------------
LERF_FRP_3m
04/24/2020                                                    BENTLEY
12:36 PM                                                      AutoPIPE Advanced 11.01.00.24  RESULT PAGE****
-----------------------------------------------------------------------------------------------------------


                         R E S U L T   S U M M A R Y
                         ---------------------------




 Maximum restraint forces (lb)
 -----------------------------

          Maximum X :     -3846      Point : W07        Load Comb.: GT3P3W2{3}
          Maximum Y :     -1594      Point : 5222       Load Comb.: GT1P1E4{1}+Omega
          Maximum Z :     -3339      Point : W09        Load Comb.: GT3P3W2{3}
          Max. total:      3847      Point : W07        Load Comb.: GT3P3W2{3}

 Maximum restraint moments (ft-lb)
 ---------------------------------

          Maximum X :      1651      Point : 5300       Load Comb.: GT2P2W3{2}
          Maximum Y :      -722      Point : W73        Load Comb.: GT1P1E4{1}+Omega
          Maximum Z :     -1677      Point : 5300       Load Comb.: GP1T1W4{1}
          Max. total:      2304      Point : 5300       Load Comb.: GP1T1W4{1}
```

CALCULATION SHEET

Project No. S54413.024	**Calculation No.** S54413.024-M-001	**Rev.** 0	**Page No.** 144 of 192
Title: LERF Basin 41 Buried Piping Analysis			
Prepared By: JD Williams	**Date:** 5/13/20	**Checked By:** JS Huisingh	**Date:** 5/13/20

```
-----------------------------------------------------------------------------------------------------------
LERF_FRP_3m
04/24/2020                                                    BENTLEY
12:36 PM                                                      AutoPIPE Advanced 11.01.00.24  RESULT PAGE****
-----------------------------------------------------------------------------------------------------------


                         R E S U L T   S U M M A R Y
                         ---------------------------



     Maximum sustained stress

                           Point            : R16
                           Stress    psi    : 14684
                           Allowable psi    : 186856
                           Ratio            : 0.08
                           Load combination : GR+P1{1}

     Maximum displacement stress

                           Point            : R16
                           Stress    psi    : 14678
                           Allowable psi    : 0
                           Ratio            : 0.00
                           Load combination : T1+P1{1}

     Maximum occasional stress

                           Point            : R16
                           Stress    psi    : 14685
                           Allowable psi    : 248212
                           Ratio            : 0.06
                           Load combination : GR+P1+E3{1}

     Maximum combined stress

                           Point            : R16
                           Stress    psi    : 14684
                           Allowable psi    : 231479
                           Ratio            : 0.06
                           Load combination : GR+T1+P1{1}
```

CALCULATION SHEET

Project No. S54413.024	**Calculation No.** S54413.024-M-001	**Rev.** 0	**Page No.** 145 of 192
Title: LERF Basin 41 Buried Piping Analysis			
Prepared By: JD Williams	**Date:** 5/13/20	**Checked By:** JS Huisingh	**Date:** 5/13/20

```
-----------------------------------------------------------------------------------------------------------
LERF_FRP_3m
04/24/2020                                                    BENTLEY
12:36 PM                                                      AutoPIPE Advanced 11.01.00.24  RESULT PAGE****
-----------------------------------------------------------------------------------------------------------


                         R E S U L T   S U M M A R Y
                         ---------------------------



     Maximum sustained stress ratio

                           Point            : AC05
                           Stress    psi    : 3868
                           Allowable psi    : 4689
                           Ratio            : 0.82
                           Load combination : GR+P3{3}

     Maximum displacement stress ratio

                           Point            : A00
                           Stress    psi    : 1808
                           Allowable psi    : 0
                           Ratio            : 0.00
                           Load combination : T1+P1{1}

     Maximum occasional stress ratio

                           Point            : W58
                           Stress    psi    : 5059
                           Allowable psi    : 6111
                           Ratio            : 0.83
                           Load combination : GR+P3+E4{3}

     Maximum combined stress ratio

                           Point            : X40
                           Stress    psi    : 4396
                           Allowable psi    : 5487
                           Ratio            : 0.80
                           Load combination : GR+T1+P1{1}



     * * * The system satisfies ISO 14692 (2002 + 2005 addenda) code requirements * * *
     * * * for the selected options                                               * * *

           Warnings:
           (1) Maximum displacement stress ratio is zero
```

CALCULATION SHEET

Project No. S54413.024	**Calculation No.** S54413.024-M-001	**Rev.** 0	**Page No.** 146 of 192
Title: LERF Basin 41 Buried Piping Analysis			
Prepared By: JD Williams	**Date:** 5/13/20	**Checked By:** JS Huisingh	**Date:** 5/13/20

ATTACHMENT 1

AUTOPIPE SOIL MODELING INFORMATION

Sargent & Lundy Engineering Services, Inc.

CALCULATION SHEET

Project No. S54413.024	**Calculation No.** S54413.024-M-001	**Rev.** 0	**Page No.** 147 of 192
Title: LERF Basin 41 Buried Piping Analysis			
Prepared By: JD Williams	**Date:** 5/13/20	**Checked By:** JS Huisingh	**Date:** 5/13/20

TABLE D-2
Unified Soil Classification System (ASTM D-2487)

Major Divisions		Grp Sym	Soil Description	Lab Classification Criteria: General	Lab Classification Criteria: % Finer than #200 Sieve (Note 2)
Coarse-Grained Soils (over 50% by weight retained on No. 200 sieve)	Gravelly Soils (over 50% of coarse fraction retained on No. 4 sieve)	GW	Well graded gravels, gravel-sand mixtures, little or no fines	$C_u > 4$ and $1 < C_z < 3$	Less than 5
		GP	Poorly graded gravels, gravel-sand mixtures, little or no fines	not meeting both criteria for GW	Less than 5
		GM	Silty gravels, gravel-sand-silt mixtures	Atterberg limits plot below "A-line", or $I_p < 4$ (see Note 1)	More than 12
		GC	Clayey gravels, gravel-sand-clay mixtures	Atterberg limits plot above "A-line" and $I_p > 7$ (see Note 1)	More than 12
	Sandy Soils (over 50% of coarse fraction passes thru No. 4 sieve)	SW	Well graded sands, gravelly sands, little or no fines	$C_u > 6$ and $1 < C_z < 3$	Less than 5
		SP	Poorly graded sands, gravelly sands, little or no fines	not meeting both criteria for SW	Less than 5
		SM	Silty sands, sand-silt mixtures	Atterberg limits plot below "A-line", or $I_p < 4$ (see Note 1)	More than 12
		SC	Clayey sands, sand-clay mixtures	Atterberg limits plot above "A-line" and $I_p > 7$ (see Note 1)	More than 12
Fine-Grained Soils (over 50% by weight passes thru No 200 sieve)	Silts & Clays (W_L <50%)	ML	Inorganic silts & very fine sands, rock flour, silty or clayey fine sands, or clayey silts with slight plasticity	Use the Plasticity chart (Figure D-9) for classification of fine-grained soils and fine fraction of coarse-grained soils. (see Note 1)	
		CL	Inorganic clays of low to medium plasticity, gravelly clays, sandy clays, silty clays, lean clays		
		OL	Organic silts and organic silty clays of low plasticity		
	Silts & Clays (W_L >50%)	MH	Inorganic silts, micaceous or diatomaceous fine sandy or silty soils, elastic silts		
		CH	Inorganic clays of high plasticity, fat clays		
		OH	Organic clays of medium to high plasticity, organic silts		
	Highly Organic Soils	Pt	Peat, muck and other highly organic soils	Visual-manual identification	

NOTES

1. Atterberg limits plotting in the hatched area (see Figure D-9) are borderline classifications requiring use of dual Group Symbols. The equation of the "A-line" is as follows: $I_P = 0.73(W_L - 20)$
2. For soils having 5 to 12% of fines passing through a No. 200 sieve, use dual Group Symbols (e.g. GW-GC).
3. Variable Definitions:

C_u = uniformity coefficient

I_p = plasticity index (%)

= coefficient of curvature

Sargent & Lundy Engineering Services, Inc.

CALCULATION SHEET

Project No. S54413.024	**Calculation No.** S54413.024-M-001	**Rev.** 0	**Page No.** 148 of 192
Title: LERF Basin 41 Buried Piping Analysis			
Prepared By: JD Williams	**Date:** 5/13/20	**Checked By:** JS Huisingh	**Date:** 5/13/20

C_z

w_L = liquid limit (%)

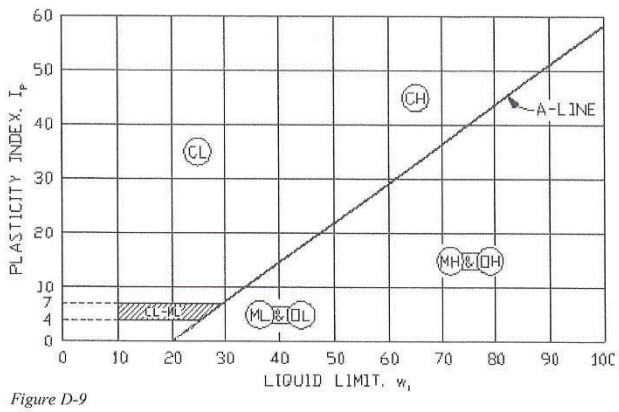

Figure D-9

TABLE D-3
Summary of Estimated Soil Properties

Group Symbol	Coarse Material Content	at 100 % comp	at ≈ 94% compaction					at ≈ 80 % compaction				
			Assumed					Assumed				
		γ_{dry} (lb/ft3)	γ_{dry} (lb/ft3)	H_2O Content (%)	γ_{Tot} (lb/ft³)	ϕ (°)	C (lb/ft²)	γ_{dry} (lb/ft3)	H_2O Content (%)	γ_{Tot} (lb/ft³)	ϕ (°)	C (lb/ft²)
ML	< 5%	105	99	18	117	32	1000	85	25	106	30	190
CL	< 5%	105	99	18	117	30	800	85	25	106	28	270
ML	5-25%	120	113	13	128	34	1000	95	20	114	30	190
CL	5-25%	120	113	13	128	30	800	95	20	114	28	270
ML	25-50%	130	122	9	133	34	1000	105	15	121	30	190
CL	25-50%	130	122	9	133	30	800	105	15	121	28	270
MH	< 5%	105	99	21	120	30	1000	85	30	111	28	400
CH	< 5%	105	99	21	120	21	900	85	30	111	19	300
MH	5-25%	120	113	16	131	32	1000	95	25	119	30	400
CH	5-25%	120	113	16	131	21	900	95	25	119	19	300
MH	25-50%	130	122	13	138	32	1000	105	20	126	28	400
CH	25-50%	130	122	13	138	21	900	105	20	126	19	300
SM		122	115	12	129	34	450	105	15	121	32	400
SC		122	115	12	129	32	300	105	15	121	29	230
SW		132	124	9	135	39		115	10	127	38	
SP		115	108	9	118	38		105	10	116	37	
GM		140	132	8	142	40		120	10	132	35	
GC		140	132	7	141	40		120	10	132	33	
GW		140	132	4	137	42		125	5	131	39	
GP		125	118	4	122	42		110	5	116	38	

$c = 0$
$\phi = 40$
$\gamma = 125$

The properties for soil backfill around a buried pipe can vary greatly depending on the type of soil, and the degree of backfill compaction. General guidelines for estimating soil properties based on these factors are summarized in Table D-4.

CALCULATION SHEET

Project No. S54413.024	**Calculation No.** S54413.024-M-001	**Rev.** 0	**Page No.** 149 of 192
Title: LERF Basin 41 Buried Piping Analysis			
Prepared By: JD Williams	**Date:** 5/13/20	**Checked By:** JS Huisingh	**Date:** 5/13/20

ATTACHMENT 2

NEW FRP PIPE DATA (CONLEY COMPOSITES)

- Series 40 Pipe Data
- Series 30 Pipe Data
- Double Containment Pipe Properties
- Buried Pipe Data
- Fitting-in-Fitting Dimensions
- Fitting Thicknesses (Email from Conley Rep.)
- ISO 14692 Code Explanation (Email from Conley Rep.)
- ASTM D2992-01 Calculation, Regression, & Test Data
- ISO 14692 Design Envelope
- Connecting to Existing FRP Pipe (Email from Conley Rep.)

Sargent & Lundy Engineering Services, Inc.

CALCULATION SHEET

Project No. S54413.024	**Calculation No.** S54413.024-M-001	**Rev.** 0	**Page No.** 150 of 192
Title: LERF Basin 41 Buried Piping Analysis			
Prepared By: JD Williams	**Date:** 5/13/20	**Checked By:** JS Huisingh	**Date:** 5/13/20

Conley Composites
an ANDRONACO INDUSTRIES company

EPOXY SCHEDULE 40
EXTRA HEAVY DUTY PIPING

ASTM DESIGNATION CODE RTRP-11FW1-2113

Conley Product Data

RUGGED TOP OF THE LINE PERFORMANCE ~ AFFORDABLE COST

Description

- Extra heavy wall filament wound piping for service up to 300 psi
- 60 mil double Nexus® reinforced corrosion barrier (inner liner)
- Premium aromatic amine cured product for operating temperatures up to 275°F
- Sizes available from 1" through 30"
- Complete line of filament wound fittings available
- In house fabrication facilities "From your blueprints to pipe assemblies"
- Color coding available
- Conductive systems available
- Fire-resistant systems available
- See Sch 40 Piping Specification

Typical Applications

- Waste water treatment
- Steel pickling
- Solvents
- Petrochemical
- Pharmaceutical
- Chemical processing
- Brine (salts) and brackish water
- Jet fuel
- Gasoline – Diesel – Fuel Oil
- Cooling water
- Odor control
- Industrial waste
- Food and beverages
- Bridge, roof and floor drains

Performance

- Excellent chemical resistance inside and outside to a variety of caustics, acids, brines, and petroleum products ~ See the chemical resistance chart for fluid services
- External UV/Corrosion barrier minimum 20 mil on all pipe and fittings
- 25 year guarantee against *'fiber blooming'* on all pipe and fittings
- Straight socket joining system (No expensive tapering tools required)

Specifications

- ASTM D2996 Filament-Wound "Fiberglass" Pipe
- ASTM D2310 Classification for Machine-Made "Fiberglass" Pipe
- ASTM D3567 Determining Dimensions of "Fiberglass" Pipe and Fittings
- ASTM D4024 Machine Made "Fiberglass" Flanges
- ASTM D5685 "Fiberglass" Pressure Pipe Fittings

Codes & Standards

- AWWA C950 Fiberglass Pressure Pipe Standards
- ASME B31.1 Power Piping Code
- ASME B31.3 Process Piping Code

Listings

- U.S. Federal Regulations FDA 21 CFR 175.300
- API 15LR Specification for Low Pressure Fiberglass Line Pipe and Fittings

PDS40E (12/14) 1

Sargent & Lundy Engineering Services, Inc.

CALCULATION SHEET

Project No. S54413.024	**Calculation No.** S54413.024-M-001	**Rev.** 0	**Page No.** 151 of 192
Title: LERF Basin 41 Buried Piping Analysis			
Prepared By: JD Williams	**Date:** 5/13/20	**Checked By:** JS Huisingh	**Date:** 5/13/20

Schedule 40
Pipe Dimensional Data* and Pressure Ratings[1] from –50° to 275°F

[1]Static pressure rating; steady (stationary) pressure is created when using a gear pump, turbine pump, centrifugal pump, etc.
[2]Vacuum Service: A full vacuum within the pipe is equivalent to 14.7 psi external pressure at sea level. Contact Conley for higher external pressure ratings.

NOM PIPE DIA	PIPE I.D.	PIPE O.D.	NOM LINER THK (IN)	NOM REINF THK (IN)	NOM UV THK (IN)	TOT THK (IN)	INT PRESS (PSI)	VAC PRESS (PSI)[2]
1"	0.88	1.32	0.060	0.120	0.040	0.220	300	2026
1 ½"	1.38	1.88	0.060	0.150	0.040	0.250	300	1370
2"	1.88	2.38	0.060	0.150	0.040	0.250	300	675
2 ½"	2.38	2.88	0.060	0.150	0.040	0.250	300	380
3"	3.00	3.47	0.060	0.135	0.040	0.235	300	160
4"	4.00	4.48	0.060	0.160	0.020	0.240	300	123
6"	6.00	6.57	0.060	0.205	0.020	0.285	250	82
8"	8.00	8.60	0.060	0.220	0.020	0.300	250	45
10"	10.00	10.68	0.060	0.220	0.060	0.340	200	22.9
12"	12.25	13.00	0.060	0.275	0.040	0.375	200	24.8
14"	14.25	15.00	0.060	0.275	0.040	0.375	175	16.1
16"	16.25	17.00	0.060	0.275	0.040	0.375	150	11.1
18"	18.25	19.00	0.060	0.275	0.040	0.375	125	7.9
20"	20.25	20.96	0.060	0.275	0.020	0.355	125	5.9
24"	24.25	25.11	0.060	0.330	0.040	0.430	125	5.9
30"	30.50	31.43	0.060	.0385	0.020	0.465	100	4.8

*All values are nominal. Minimum wall thickness shall not be less than 87.5% of nominal wall thickness in accordance with ASTM D2996.

Support Spans* and Capacities at 75°F

NOM PIPE DIA	TYPE I SIMPLE SPAN (FT)	TYPE II MAX CONT SPAN (FT)	TYPE IV FIXED END SPAN (FT)	MIN BEND RADIUS (FT)	WT/FT (LBS)	CAP (GAL/FT)
1"	7.6	9.0	11.4	20	0.61	0.03
1 ½"	9.1	10.7	13.7	32	1.03	0.08
2"	10.1	11.8	15.1	44	1.35	0.14
2 ½"	10.9	12.8	16.3	55	1.66	0.23
3"	11.5	13.5	17.2	69	1.92	0.37
4"	13.0	15.2	19.4	93	2.57	0.65
6"	15.3	18.0	22.9	139	4.52	1.47
8"	16.9	19.8	25.3	185	6.29	2.61
10"	18.1	21.2	27.0	231	8.88	4.08
12"	20.0	23.5	30.0	284	11.96	6.12
14"	20.9	24.5	31.3	330	13.85	8.28
16"	21.7	25.5	32.5	376	15.75	10.77
18"	22.5	26.3	33.6	422	17.64	13.59
20"	23.1	27.1	34.6	469	18.48	16.73
24"	25.3	29.6	37.7	561	26.81	23.99
30"	27.8	32.6	41.6	706	36.37	37.95

***NOTE:** Span deflection = ½" with fluid of 1.0 specific gravity

2 PDS40E (12/14)

Sargent & Lundy Engineering Services, Inc.

CALCULATION SHEET

Project No. S54413.024	**Calculation No.** S54413.024-M-001	**Rev.** 0	**Page No.** 152 of 192
Title: LERF Basin 41 Buried Piping Analysis			
Prepared By: JD Williams	**Date:** 5/13/20	**Checked By:** JS Huisingh	**Date:** 5/13/20

Conley Composites
an ANDRONACO INDUSTRIES company

EPOXY SCHEDULE 30
HEAVY DUTY PIPING

ASTM DESIGNATION CODE RTRP-11FW1-2113

Conley Product Data

OUTSTANDING BENEFITS AND COST SAVINGS

Description

- Heavy duty filament wound piping for service up to 250 psi
- 60 mil double Nexus® reinforced corrosion barrier (inner liner)
- Premium aromatic amine cured product for operating temperatures up to 275°F
- Sizes available from 2" through 30"
- Complete line of filament wound fittings available
- In house fabrication facilities "From your blueprints to pipe assemblies"
- Color coding available
- Conductive systems available
- Fire-resistant systems available
- See Sch 30 Piping Specification

Typical Applications

- Waste water treatment
- Steel pickling
- Solvents
- Petrochemical
- Pharmaceutical
- Chemical processing
- Brine (salts) and brackish water
- Jet fuel
- Gasoline – Diesel – Fuel Oil
- Cooling water
- Odor control
- Industrial waste
- Food and beverages
- Bridge, roof and floor drains

Performance

- Excellent chemical resistance inside and outside to a variety of caustics and acids ~ See the chemical resistance chart for fluid services
- External UV/Corrosion barrier minimum 10 mil on all pipe and fittings
- 25 year guarantee against *'fiber blooming'* on all pipe and fittings
- Straight socket joining system (No expensive tapering tools required)

Specifications

- ASTM D2996 Filament-Wound "Fiberglass" Pipe
- ASTM D2310 Classification for Machine-Made "Fiberglass" Pipe
- ASTM D3567 Determining Dimensions of "Fiberglass" Pipe and Fittings
- ASTM D4024 Machine Made "Fiberglass" Flanges
- ASTM D5685 "Fiberglass" Pressure Pipe Fittings

Codes & Standards

- AWWA C950 Fiberglass Pressure Pipe Standards
- ASME B31.1 Power Piping Code
- ASME B31.3 Process Piping Code

Listings

- U.S. Federal Regulations FDA 21 CFR 175.300
- CRN:0A10216.5 Category A - Pipe Fittings
- CRN:0B10216.5 Category B - Pipe Flanges

PDS30E (12/14) 1

Sargent & Lundy Engineering Services, Inc.

CALCULATION SHEET

Project No. S54413.024	**Calculation No.** S54413.024-M-001	**Rev.** 0	**Page No.** 153 of 192
Title: LERF Basin 41 Buried Piping Analysis			
Prepared By: JD Williams	**Date:** 5/13/20	**Checked By:** JS Huisingh	**Date:** 5/13/20

Schedule 30
Pipe Dimensional Data* and Pressure Ratings[1] from –50° to 275°F

[1]Static pressure rating; steady (stationary) pressure is created when using a gear pump, turbine pump, centrifugal pump, etc.
[2]Vacuum Service: A full vacuum within the pipe is equivalent to 14.7 psi external pressure at sea level. Contact Conley for higher external pressure ratings.

NOM PIPE DIA	PIPE I.D.	PIPE O.D.	NOM LINER THK (IN)	NOM REINF THK (IN)	NOM UV THK (IN)	TOT THK (IN)	INT PRESS (PSI)	VAC PRESS (PSI)[2]
2"	1.88	2.17	0.060	0.075	0.010	0.145	250	111.4
3"	3.00	3.34	0.060	0.090	0.020	0.170	250	52.8
4"	4.00	4.34	0.060	0.090	0.020	0.170	250	24.1
6"	6.00	6.38	0.060	0.110	0.020	0.190	175	13.8
8"	8.00	8.38	0.060	0.110	0.020	0.190	150	6.1
10"	10.00	10.49	0.060	0.165	0.020	0.245	150	10.2
12"	12.25	12.74	0.060	0.165	0.020	0.245	125	5.7
14"	14.25	14.78	0.060	0.165	0.040	0.265	100	3.6
16"	16.25	16.78	0.060	0.165	0.040	0.265	100	2.5
18"	18.25	18.85	0.060	0.220	0.020	0.300	100	4.2
20"	20.25	20.85	0.060	0.220	0.020	0.300	100	3.1
24"	24.25	24.96	0.060	0.275	0.020	0.355	100	3.5
30"	30.50	31.32	0.060	0.330	0.020	0.410	100	3.1

*All values are nominal. Minimum wall thickness shall not be less than 87.5% of nominal wall thickness in accordance with ASTM D2996.

Support Spans* and Capacities at 75°F

NOM PIPE DIA	TYPE I SIMPLE SPAN (FT)	TYPE II MAX CONT SPAN (FT)	TYPE IV FIXED END SPAN (FT)	MIN BEND RADIUS (FT)	WT/FT (LBS)	CAP (GAL/FT)
2"	8.6	10.1	12.9	44	0.74	0.14
3"	10.3	12.0	15.3	69	1.36	0.37
4"	11.4	13.3	17.0	93	1.79	0.65
6"	13.1	15.3	19.5	139	2.97	1.47
8"	14.4	16.9	21.5	185	3.93	2.61
10"	16.3	19.1	24.4	231	6.34	4.08
12"	17.3	20.3	25.8	284	7.73	6.12
14"	18.0	21.1	27.0	330	9.72	8.28
16"	18.7	21.9	27.9	376	11.05	10.77
18"	20.5	24.0	30.6	422	14.06	13.59
20"	21.1	24.7	31.5	469	15.57	16.73
24"	23.2	27.2	34.7	561	22.06	23.99
30"	25.7	30.1	38.4	706	32.01	37.95

***NOTE:** Span deflection = ½" with fluid of 1.0 specific gravity

Span multipliers for fluids of different specific gravities

FLUID SPECIFIC GRAVITY							
AIR	0.75	0.9	1.0	1.1	1.25	1.5	2.0
1.40	1.07	1.02	1.0	0.98	0.95	0.90	0.84
(MULTIPLIER FOR CORRECTED SPAN LENGTHS)							

Span multipliers for fluids at different temperatures

FLUID TEMPERATURE						
75°F	100°F	150°F	200°F	225°F	250°F	275°F
1.0	0.98	0.93	0.88	0.84	0.80	0.75
(MULTIPLIER FOR CORRECTED SPAN LENGTHS)						

2 PDS30E (12/14)

Sargent & Lundy Engineering Services, Inc.

CALCULATION SHEET

Project No. S54413.024	**Calculation No.** S54413.024-M-001	**Rev.** 0	**Page No.** 154 of 192
Title: LERF Basin 41 Buried Piping Analysis			
Prepared By: JD Williams	**Date:** 5/13/20	**Checked By:** JS Huisingh	**Date:** 5/13/20

Conley Composites
an ANDRONACO INDUSTRIES company

EPOXY SCHEDULE 40/30 DOUBLE CONTAINED PIPING

ASTM DESIGNATION CODE RTRP-11FW1-2113

Conley Product Data

RUGGED TOP OF THE LINE PERFORMANCE ~ AFFORDABLE COST

Description

- Extra heavy duty filament wound piping for service up to 150 psi
- 60 mil double Nexus® reinforced corrosion barrier (inner liner)
- Premium aromatic amine cured product for operating temperatures up to 275°F
- Sizes available from 2" through 30"
- Complete line of filament wound fittings available
- In house fabrication facilities "From your blueprints to pipe assemblies"
- Color coding available
- Patented interlocking union for thermal expansion (US Patent #5449204 & 5368338)
- See Sch 40/30 Specification
- See Sch 40 Product Data
- See Sch 30 Product Data

Typical Applications

- Waste water treatment
- Steel pickling
- Automotive
- Petrochemical
- Pharmaceutical
- Chemical processing
- Brine and brackish water
- Jet fuel
- Gasoline – Diesel – Fuel Oil
- Cooling water
- Odor control
- Industrial waste
- Food and beverages
- Bridge, roof and floor drains

Performance

- Excellent chemical resistance inside and outside to a variety of caustics, acids, brines and petroleum products ~ See the chemical resistance chart for fluid services
- External UV/Corrosion barrier minimum 10/20 mil on all pipe and fittings
- 25 year guarantee against *'fiber blooming'* on all pipe and fittings
- Straight socket joining system (No expensive tapering tools required)

Specifications

- ASTM D2996 Filament-Wound "Fiberglass" Pipe
- ASTM D2310 Classification for Machine-Made "Fiberglass" Pipe
- ASTM D3567 Determining Dimensions of "Fiberglass" Pipe and Fittings
- ASTM D4024 Machine Made "Fiberglass" Flanges
- ASTM D5685 "Fiberglass" Pressure Pipe Fittings

Codes & Standards

- AWWA C950 Fiberglass Pressure Pipe Standards
- ASME B31.1 Power Piping Code
- ASME B31.3 Process Piping Code

Listings

- U.S. Federal Regulations FDA 21 CFR 175.300

Application Legislation

- 40 CFR 280. RCRA, Subtitle 1
- 40 CFR 264/5
- CERCLA "Superfund Act"

PDS4030E (12/14) 1

Sargent & Lundy Engineering Services, Inc.

CALCULATION SHEET

Project No. S54413.024	**Calculation No.** S54413.024-M-001	**Rev.** 0	**Page No.** 155 of 192
Title: LERF Basin 41 Buried Piping Analysis			
Prepared By: JD Williams	**Date:** 5/13/20	**Checked By:** JS Huisingh	**Date:** 5/13/20

Typical Properties

TEMPERATURE	75°F	250°F	
PROPERTY	VALUE	VALUE	METHOD
AXIAL TENSILE STRENGTH	14,200 psi	10,650 psi	ASTM D2105
AXIAL TENSILE DESIGN STRENGTH	3,550 psi	2,660 psi	ASTM D2105
AXIAL MODULUS OF ELASTICITY	1.75×10^6 psi	1.30×10^6 psi	ASTM D2105
COMPRESSIVE STRENGTH	22,750 psi	17,000 psi	ASTM D695
COMPRESSIVE DESIGN STRENGTH	5,685 psi	4,250 psi	ASTM D695
COMPRESSION MODULUS	2.80×10^6 psi	2.10×10^6 psi	ASTM D695
POISSON'S RATIO $V_{a/h}$ ($V_{h/a}$)	0.33 (0.23)		*CONLEY METHOD #20
BEAM BENDING, ULTIMATE STRESS	30,000 psi	22,500 psi	CONLEY METHOD 8
BEAM BENDING, DESIGN STRESS[1]	3,750 psi	2,810 psi	CONLEY METHOD 8
SHEAR MODULUS	1.30×10^6 psi	1.00×10^6 psi	*CONLEY METHOD #9
HYDROSTATIC DESIGN BASIS	16,000 psi	8,000 psi	ASTM D2992 PROCEDURE B
HYDROSTATIC BURST (WALL STRESS @ 72°F)	32,000 psi	24,000 psi	ASTM D1599
CIRCUMFERENTIAL MODULUS OF ELASTICITY	2.50×10^6 psi	1.87×10^6 psi	ASTM D1599
FLEXURAL MODULUS OF ELASTICITY	1.75×10^6 psi	1.30×10^6 psi	ASTM 2790
COEFFICIENT OF LINEAR THERMAL EXPANSION	9.5×10^{-6} IN / IN- °F		CONLEY METHOD 3
COEFFICIENT OF THERMAL CONDUCTIVITY	2.9 BTU/HR-IN / FT^2 - °F		CONLEY METHOD 16
SPECIFIC GRAVITY	1.85		
DENSITY	0.067 LB/CU IN		
DIELECTRIC STRENGTH	535 VOLTS / MIL		ASTM D149
DEGREE OF CURE	175°C (347°F) Tg		DMA
HEAT DEFLECTION TEMPERATURE	150°C (302°F)		ISO 75-3
FLOW FACTOR (HAZEN-WILLIAMS)	150		
SURFACE ROUGHNESS	1.7×10^{-5} FEET		
MANNING'S "n"	0.009 INCH		

[1]Beam bending design stress is 1/8 of ultimate to allow for combined stress (bending and pressure)

PDS4030E (12/14) 5

Sargent & Lundy Engineering Services, Inc.

CALCULATION SHEET

Project No. S54413.024	**Calculation No.** S54413.024-M-001	**Rev.** 0	**Page No.** 156 of 192
Title: LERF Basin 41 Buried Piping Analysis			
Prepared By: JD Williams	**Date:** 5/13/20	**Checked By:** JS Huisingh	**Date:** 5/13/20

(Conley Literature)

Buried Pipe

A successful buried Conley Piping System requires proper fabrication, curing and handling. Equally important is trench design, bedding, backfill, and soil coverage of the pipe system.

Fiberglass pipe and fittings are sensitive to impact loads and must be handled accordingly. Refer to the Conley Installation and Fabrication Manual for shipping, handling, storage and inspection of Conley Fiberglass Pipe page 1. For dimensional data and tables of pipe weights refer to the Conley Products section.

Conley Piping Systems use a straight socket adhesive joining system that is totally restrained. Except in cases of very high pressure and/or temperature, thrust blocks at changes in direction are not required.

For burial applications, Conley Fiberglass pipe is considered to be a *"flexible conduit"*. Buried piping is considered to be "continuously anchored" and therefore very stable. Conley piping requires typical burial requirements for fiberglass pipe, i.e., shaped trench bottom, select granular bedding and backfill compacted to 90% Proctor Density and pavement or sleeves to provide load distribution for live loads.

In double containment piping systems, the containment pipe will remain at essentially ground temperature so thrust blocks are not normally required. Trench, bedding, and backfill materials are all specified and controlled to provide the required support for the pipe under the burial loads.

A. Trench Design and Burial Depths

One purpose of the trench is to provide working space while installing the pipe. Nominal trench widths are listed in the table below.

Table 1 Nominal Trench Widths

Pipe Size (in)	Minimum (in)	Maximum (in)
1	18	26
1 1/2	18	26
2	18	26
2 1/2	18	27
3	18	27
4	18	28
6	20	30
8	23	32
10	25	34
12	28	36
14	31	38
16	33	40
18	36	42
20	39	44
24	44	48
30	52	56

The maximum and minimum burial depths vary with diameter, soil conditions, loading conditions and pipe schedule. On the conservative side of planning and with a backfill modulus or shear strength of 1,500 lbs/ft^2, the minimum burial depth of pipe under unpaved areas is two feet.

This depth of cover assumes a tandem axle wheel load of 34,000 pounds.

For soils that do not meet the shear strength of 1,500 lbs/ft^2 or if the axial load is higher than the standard the minimum pipe burial depth will be greater than 3 feet.

The minimum burial depth may be reduced if the pipe is buried under concrete or asphalt. Maximum burial depths are usually limited to 20-ft, but may be greater if the trench and bedding are designed for greater depth.

Sargent & Lundy Engineering Services, Inc.

CALCULATION SHEET

Project No. S54413.024	**Calculation No.** S54413.024-M-001	**Rev.** 0	**Page No.** 157 of 192
Title: LERF Basin 41 Buried Piping Analysis			
Prepared By: JD Williams	**Date:** 5/13/20	**Checked By:** JS Huisingh	**Date:** 5/13/20

(Conley Literature)

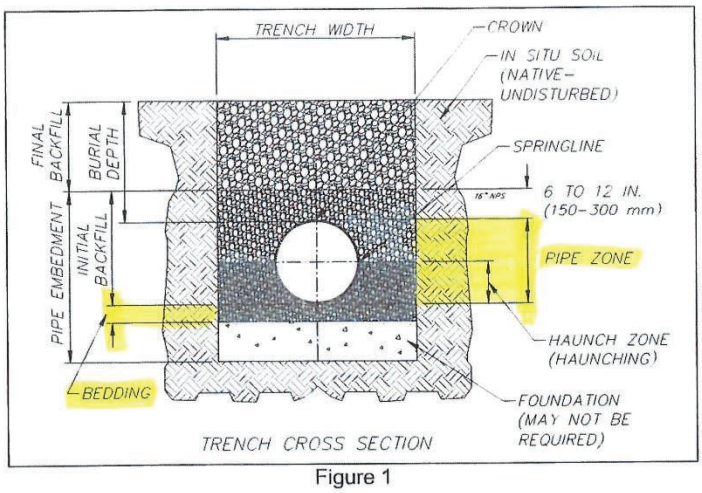

Figure 1

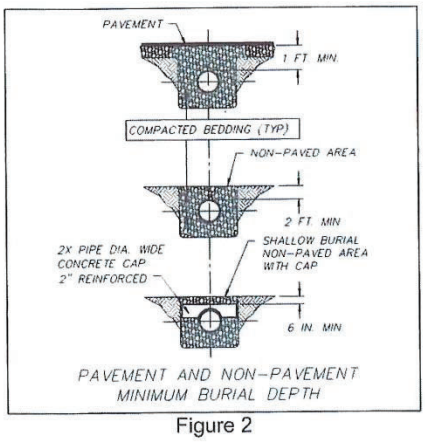

Figure 2

Table 2 Bedding and Backfill Materials Recommendation

Stiffness category (Reference for AWWA M45)	Backfill Material	Compaction (%) necessary
SC1	Crushed rock 15% or less sand, maximum 25% (passing 3/8inch sieve and maximum 5%)	No compaction required
SC2	Clean coarse-grained soils (12% or less)	75-85
SC3	Coarse-grained soils (more than 12%)	85-95
SC4	Fine-grained soils (30% or less)	More than 95

B. Bedding & Backfill

Typical burial requirements for fiberglass pipe require a fully supported and uniform trench bottom, avoiding sharp angular rocks and or voids in the bedding material. Full longitudinal support must be met.

If more than one pipe is to be laid in a trench at least six inches of properly supported backfill should separate the two pipe lines.

Generally, the most successful bedding and pipe zone embedment material is crushed rock or pea gravel under the SC1 Stiffness Category per ASTM D2487 Standard Classification of soils for Engineering Purposes. S1 material will provide good support for the pipeline even if it is only dumped rather than compacted. Still it is better to work the bedding material into the critical zone of the trench as shown below in Figure 3.

Sargent & Lundy Engineering Services, Inc.

CALCULATION SHEET

Project No. S54413.024	**Calculation No.** S54413.024-M-001	**Rev.** 0	**Page No.** 158 of 192
Title: LERF Basin 41 Buried Piping Analysis			
Prepared By: JD Williams	**Date:** 5/13/20	**Checked By:** JS Huisingh	**Date:** 5/13/20

CR = CARRIER				CT = CONTAINMENT			
CR DIA	CT DIA	Ai	Ao	Bi	Bo	Ci	Co
1 1/2	3	2 9/16	4 1/16	1 5/16	1 1/2	1 1/4	2 9/16
2	4	3 3/16	5 3/8	1 1/2	2 1/8	1 11/16	3 1/4
3	6	4 1/4	7 1/4	2	3	2 1/4	4 1/4
4	8	5 5/8	8 5/8	2 5/8	3 1/4	3	5 3/8
6	10	7 5/8	10 3/8	3 1/2	3 1/2	4 1/8	6 7/8
8	12	8 5/8	12 3/4	3 3/4	4	4 7/8	8 3/4
10	14	10 3/8	14 5/8	4	4 1/4	6 3/8	10 3/8
12	16	12 3/4	17 5/8	4 1/2	4 7/8	8 1/4	12 3/4
14	18	15 1/8	20	4 3/4	4 7/8	10 3/8	15 1/8
16	20	15 1/2	20 3/8	5 3/8	4 7/8	10 1/8	15 1/2

* * *

CONTACT CONLEY FOR INFORMATION ON NON-STANDARD SIZES

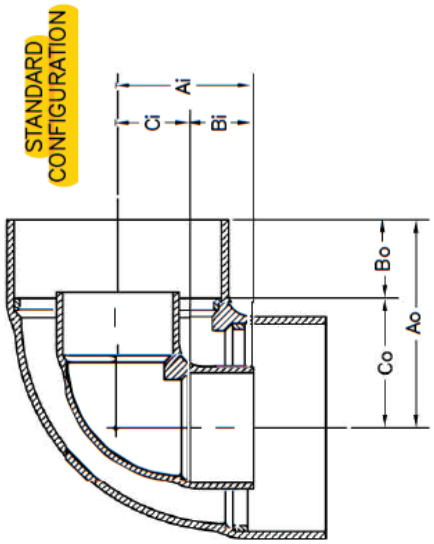

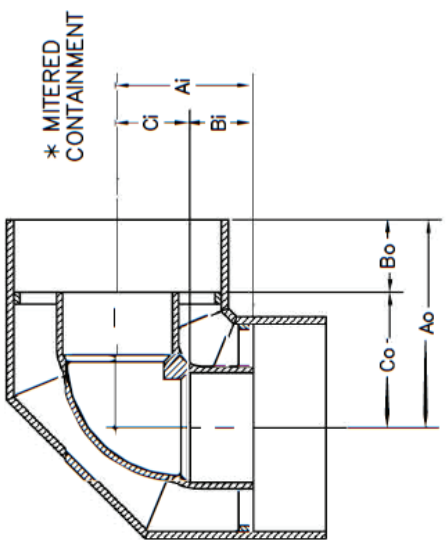

THIS FITTING IS PROTECTED UNDER U.S. PATENT NO. 5,449,204

Conley Composites
an ANDRONACO INDUSTRIES company

#200 DOUBLE CONTAINMENT 90° ELBOW

R5

200

Sargent & Lundy Engineering Services, Inc.

CALCULATION SHEET

Project No. S54413.024	**Calculation No.** S54413.024-M-001	**Rev.** 0	**Page No.** 159 of 192
Title: LERF Basin 41 Buried Piping Analysis			
Prepared By: JD Williams	**Date:** 5/13/20	**Checked By:** JS Huisingh	**Date:** 5/13/20

	CR = CARRIER			CT = CONTAINMENT		
CR DIA	CT DIA	Ai	Ao	Bi	Bo	Ci	Co
1 1/2	3	2 5/16	3 1/8	1 5/16	1 1/2	1	1 5/8
2	4	2 9/16	4 1/2	1 1/2	2 1/8	1 1/16	2 3/8
3	6	3 5/8	5 1/2	2	3	1 5/8	2 1/2
4	8	4 1/2	6 7/16	2 5/8	3 1/4	1 7/8	3 3/16
6	10	5 1/2	7 9/16	3 1/2	3 1/2	2	4 1/16
8	12	6 7/16	8 7/8	3 3/4	4	2 11/16	4 7/8
10	14	7 9/16	9 3/4	4	4 1/4	3 9/16	5 1/2
12	16	8 7/8	11 1/4	4 1/2	4 7/8	4 3/8	6 3/8
14	18	9 3/4	11 7/8	4 3/4	4 7/8	5	7
16	20	11 1/4	12 1/4	5 3/8	4 7/8	5 7/8	7 3/8

CONTACT CONLEY FOR INFORMATION ON NON-STANDARD SIZES

THIS FITTING IS PROTECTED UNDER U.S. PATENT NO. 5,449,204

Conley Composites
an ANDRONACO INDUSTRIES company

#202 DOUBLE CONTAINMENT 45° ELBOW

R2

CALCULATION SHEET

Project No. S54413.024	**Calculation No.** S54413.024-M-001	**Rev.** 0	**Page No.** 160 of 192
Title: LERF Basin 41 Buried Piping Analysis			
Prepared By: JD Williams	**Date:** 5/13/20	**Checked By:** JS Huisingh	**Date:** 5/13/20

From: David Chaney <dchaney@andronaco.com>
Sent: Wednesday, January 22, 2020 11:52 AM
To: WILLIAMS, JACOB D <jacob.d.williams@sargentlundy.com>
Cc: Matt Burdick <mburdick@andronaco.com>; Niki Reyff <nreyff@andronaco.com>
Subject: Re: Tensile Strength Questions

Jacob,

The reinforcement thickness of Conley fittings is greater than their piping counter parts. Conley 4" series 40 pipe has a reinforcement thickness of .160" Conley 4" fittings have a reinforcement thickness .295".

Size.	Pipe reinforcement	Fitting reinforcement
3"	.135"	.295"
4"	.160"	.295"
6"	.205"	.410"
8"	.220"	.410"

Conley fittings from series 30, & 4 0 are wound with the same reinforcement thickness; the series 50 fittings have the inner liner thickness increased from .060" to 100" with the same reinforcement thickness. Conley series 90-150 over 14" have a heavier reinforcement thickness. Series 90-250 fittings over 10" have a heavier reinforcement thickness.

The fundamentals of anchoring, guiding, and supporting the FRP piping systems apply to both the carrier and the containment. Conley places 3 spiders on each 20' section of pipe placed at 5', 10', and 15' measured from the same end. This placement of spiders makes for a span of no more than 10' when piping sections are connected. Fittings are supplied fitting in fitting with spiders on each side of the fitting. These spiders serve as anchor the carrier and containment together ant each fitting. The containment will still require anchors at every change in direction, change in pipe size, change of material and or manufacturer, and every 300' on any straight of pipe.

Thank You,

David Chaney

Sargent & Lundy Engineering Services, Inc.

CALCULATION SHEET

Project No. S54413.024	**Calculation No.** S54413.024-M-001	**Rev.** 0	**Page No.** 161 of 192
Title: LERF Basin 41 Buried Piping Analysis			
Prepared By: JD Williams	**Date:** 5/13/20	**Checked By:** JS Huisingh	**Date:** 5/13/20

Explanation of Hydrostatic Design Basis & Qualified Stress Using ASTM D2992 & ISO 14692

From: Matt Burdick <mburdick@andronaco.com>
Sent: Thursday, February 6, 2020 1:46 PM
To: WILLIAMS, JACOB D <jacob.d.williams@sargentlundy.com>
Cc: Niki Reyff <nreyff@andronaco.com>; David Chaney <dchaney@andronaco.com>
Subject: RE: Hydrostatic Design Basis & Qualified Stress

Jacob,

As we discussed before, the difference in our published HDB and the ISO-14692 qualified stress are the differences between the ISO mythology and the ASTM methodology for these established ratings or allowable / design stresses. The main difference is the duration and if it is based on the mean data or the lower confidence level of the established data. The qualified stresses per ISO 14692 result in slightly more conservative numbers than directly following the ASTM methods.

ASTM D2992 has the manufacturer calculate the Long Term Hydrostatic Strength (LTHS) at 100,000 hrs (~11.5 yrs) and 438,000 hrs (50 yrs) and establishes the Hydrostatic Design Basis (HDB) or allowable hoop stress σ(2:1) based on the range these values fall in. Our calculated values for the LTHS at 100,000 and 438,000 hrs are 17802psi and 16719 psi respectively. Following Table 1 of ASTM D2992 our established and published HDB is therefore 16,000 psi with this method as ASTM D2992 correlates an HDB per a given range of calculated LTHS.

From ASTM D2992:

TABLE 1 Hydrostatic Design Basis Categories by Procedure A or Procedure B

Hydrostatic Design Basis Category		Range of Calculated Values	
psi[A]	(kPa)	psi	(kPa)
2 500	(17 200)	2 400 to 3 010	(16 500 to 20 700)
3 150	(21 700)	3 020 to 3 820	(20 800 to 26 300)
4 000	(27 600)	3 830 to 4 790	(26 400 to 33 000)
5 000	(34 500)	4 800 to 5 990	(33 100 to 40 900)
6 300	(43 400)	6 000 to 7 590	(41 000 to 52 900)
8 000	(55 200)	7 600 to 9 590	(53 000 to 65 900)
10 000	(68 900)	9 600 to 11 990	(66 000 to 82 900)
12 500	(86 200)	12 000 to 15 290	(83 000 to 105 900)
16 000	(110 000)	15 300 to 18 990	(106 000 to 130 900)
20 000	(138 000)	19 000 to 23 990	(131 000 to 169 900)
25 000	(172 000)	24 000 to 29 990	(170 000 to 209 900)
31 500	(217 000)	30 000 to 37 990	(210 000 to 259 900)
40 000	(276 000)	38 000 to 47 000	(260 000 to 320 000)

[A] Standard stress levels chosen in accordance with ISO 3, Series R10

As we discussed, the ISO-14692 allows the use of ASTM D2992 to establish the qualified pressure as called out in ISO 14692-2 Table 1 and 6.2.3.1. The difference is that when establishing the qualified stress or pressure, which are relatable through product geometry (diameter and wall thickness), the time interval that is considered is 20 years or 175,200 hrs. ISO 14692 also takes the lower confidence level at this time instead of the mean value or the value established by the regression line. Since ASTM D2992 is establishing a hoop stress and our testing methodology was per ASTM D2992 Procedure B (static pressure) with unrestrained ends, the stress we are evaluating is σ(2:1) for the Lower confidence level at a 20 year time. So when considering ISO 14692 the 20 year lower confidence level hoop stress or $\sigma(2:1)_{20yrLCL}$ is σ_{qs}. This is the IS 14692 version of HDB, evaluated at the 20 year time with the conservancy that the lower confidence level brings. The other stresses in the envelope are relatable to the short term failure stresses or ultimate stresses in the different orientations through the F_{scale} factor.

I did have a typo in the design envelope that was originally sent, as you pointed out the qualified stress should have been 14,546 psi, not 14,544 psi, but this should be negligible in your analysis.

ISO 14692-3 Figure 2 shows the design envelope as shown below and describes the relationships between short term and qualified stresses rather well. Please note that σ_{qs} is a the hoop stress shown on the x-axis and that boundary of the long term design envelope.

CALCULATION SHEET

Project No. S54413.024	**Calculation No.** S54413.024-M-001	**Rev.** 0	**Page No.** 162 of 192
Title: LERF Basin 41 Buried Piping Analysis			
Prepared By: JD Williams	**Date:** 5/13/20	**Checked By:** JS Huisingh	**Date:** 5/13/20

From: WILLIAMS, JACOB D [mailto:jacob.d.williams@sargentlundy.com]
Sent: Thursday, February 6, 2020 3:06 PM
To: Matt Burdick
Cc: Niki Reyff; David Chaney
Subject: Hydrostatic Design Basis & Qualified Stress

Matt,

Thank you for the information you provided to me on the phone on Tuesday. I could still use your help in correlating what I understand to be the Conley-published design data we are to use in our design and analysis (hydrostatic design basis [HDB], etc.) with some of the numbers presented in the ISO-14692 design envelope data you provided. You told me that the hydrostatic design basis value that was determined by following Procedure B of ASTM D2992 is the same thing as the qualified stress, which I understand is the long-term hoop stress at 2:1 stress ratio, $\sigma_{hl}(2:1)$.

The $\sigma_{hl}(2:1)$ value shown on the design envelope is 14,544 psi. Was the idealized long-term envelope based on the 20-year testing? When I see the ASTM D2992-01 calculations you sent me, the lower confidence limit stress (LCL) for 20 years is 14,546 psi (nearly identical to 14,544 psi). Does this value represent the $\sigma_{hl}(2:1)$, which is (as I understand it) the qualified stress? If so, should the value that is reported in the published pipe typical properties data sheet for the HDB at 75° F be something less than 16,000 psi? Or are we to rely on the published data for these values (for reasons you can help me understand)?

I welcome your insight to help reconcile the published Conley HDB data with the test data, so I can ensure I am using the appropriate data in our design and analysis.

Thank you,

Jacob Williams, P.E.
Senior Mechanical/Structural Engineer
Sargent & Lundy
1-509-946-3300
Licensed in WA
www.sargentlundy.com

CALCULATION SHEET

Project No. S54413.024	**Calculation No.** S54413.024-M-001	**Rev.** 0	**Page No.** 163 of 192
Title: LERF Basin 41 Buried Piping Analysis			
Prepared By: JD Williams	**Date:** 5/13/20	**Checked By:** JS Huisingh	**Date:** 5/13/20

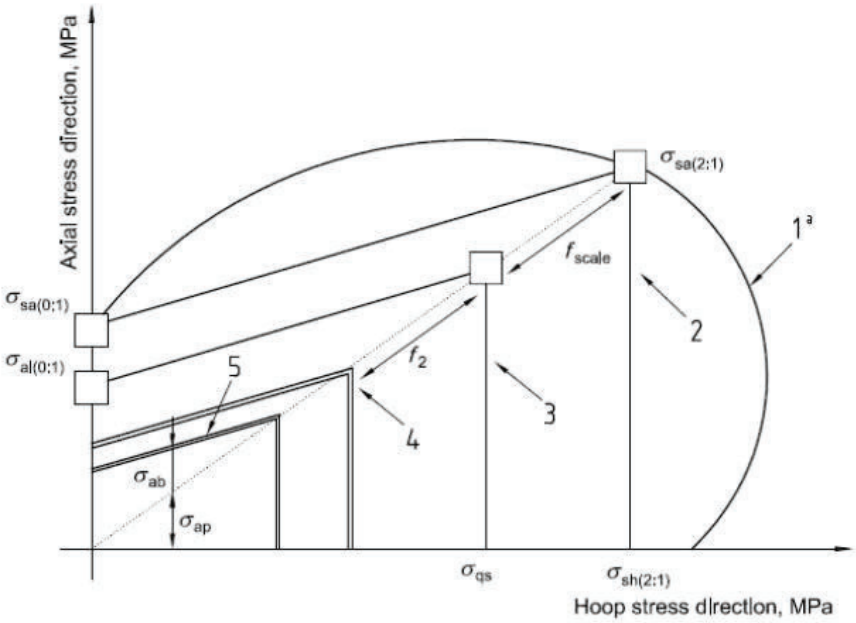

σ_{qs} is the qualified stress, in megapascals;

$\sigma_{al(0:1)}$ is the long-term axial (longitudinal) strength at 0:1 stress ratio, in megapascals;

$\sigma_{sa(0:1)}$ is the short-term axial strength at 0:1 stress ratio, in megapascals;

$\sigma_{sh(2:1)}$ is the short-term hoop strength at 2:1 stress ratio, in megapascals;

r is derived according to Equation (12).

$$f_{scale} = \frac{\sigma_{qs}}{\sigma_{sh(2:1)}} \qquad \sigma_{al(0:1)} = r \times \frac{\sigma_{qs}}{2} \qquad \text{and} \qquad r = 2 \cdot \frac{\sigma_{sa(0:1)}}{\sigma_{sh(2:1)}}$$

Per ISO 14692 the qualified pressure is basically the calculated $\sigma_{hl}(2:1)$ at a 20 year time considering the established statistical lower confidence level from logarithmic regression testing data, which capture various failure pressures at various time intervals.

$\sigma_{hl}(2:1)$

Thank you,
Matt Burdick
Senior Mechanical and Piping Engineer | Andronaco Industries
PureFlex | Nil-Cor | Ethylene | Hills-McCanna | RamParts Pumps | Polyvalve | Conley Composites
4855 Broadmoor Ave. SE | Kentwood, MI 49512
P: (616)554-4600 x174 | F: (616)554-9889
E: mburdick@andronaco.com

Sargent & Lundy Engineering Services, Inc.

CALCULATION SHEET

Project No. S54413.024	**Calculation No.** S54413.024-M-001	**Rev.** 0	**Page No.** 164 of 192
Title: LERF Basin 41 Buried Piping Analysis			
Prepared By: JD Williams	**Date:** 5/13/20	**Checked By:** JS Huisingh	**Date:** 5/13/20

Conley Composites
an ANDRONACO INDUSTRIES company

ASTM D2992-01 Calculations

01/17/20
Calculations by MJB

Specimen Identification

Material Type: Glass Fiber Reinforced Epoxy Resin Pipe with liner
Manufacturer: Conley Corporation, Kentwood, MI
Manufacturer's Code: Schedule 40
Nominal Size Tested: 2"

Test Conditions

Test Method: ASTM D2992-01 Procedure B per ASTM D1598-97
End Closure: Free-End, 4-Bolt Steel Flange w/ Backer Rings
Test Temperature: 75°F
Environment: Interior-Water; Exterior-Air
Test Dates: 10/03/2001 to 07/14/2004

Long Term Hydrostatic Strength (100,000 hr Stress and 150,000 hr Stress)

$LTHS_{100k}$: 17,802 psi *122.7 Mpa* $LTHS_{150k}$: 17,498 psi *120.6 Mpa*

20 Year Stress (175,200 hrs)

20yr: 17,383 psi *119.8 Mpa*

50 Year Stress (438,000 hrs)

50yr: 16718.8 psi *115.3 Mpa*

Lower Confidence Limits

LCL_{100k}: 15,118 psi *104.2 Mpa* LCL_{150k}: 14,703 psi *101.4 Mpa* LCL_{20yr}: 14,546 psi *100.3 Mpa* LCL_{50yr}: 13,653 psi *94.1 Mpa*

Lower Prediction Limits

LPL_{100k}: 13,100 psi *90.3 Mpa* LPL_{150k}: 12,802 psi *88.3 Mpa* LPL_{20yr}: 12,688 psi *87.5 Mpa* LPL_{50yr}: 12,029 psi *82.9 Mpa*

Coefficient of Correlation

r: 0.6186

Hydrostatic Design Basis

$HDB_{100k\ (ASTM\ D2992\ Table\ 1)}$ ***16000*** psi *110.3 Mpa*

Regression Equation

log(stress)= 4.4631 -0.0425 * log(time)

CALCULATION SHEET

Project No. S54413.024	**Calculation No.** S54413.024-M-001	**Rev.** 0	**Page No.** 165 of 192
Title: LERF Basin 41 Buried Piping Analysis			
Prepared By: JD Williams	**Date:** 5/13/20	**Checked By:** JS Huisingh	**Date:** 5/13/20

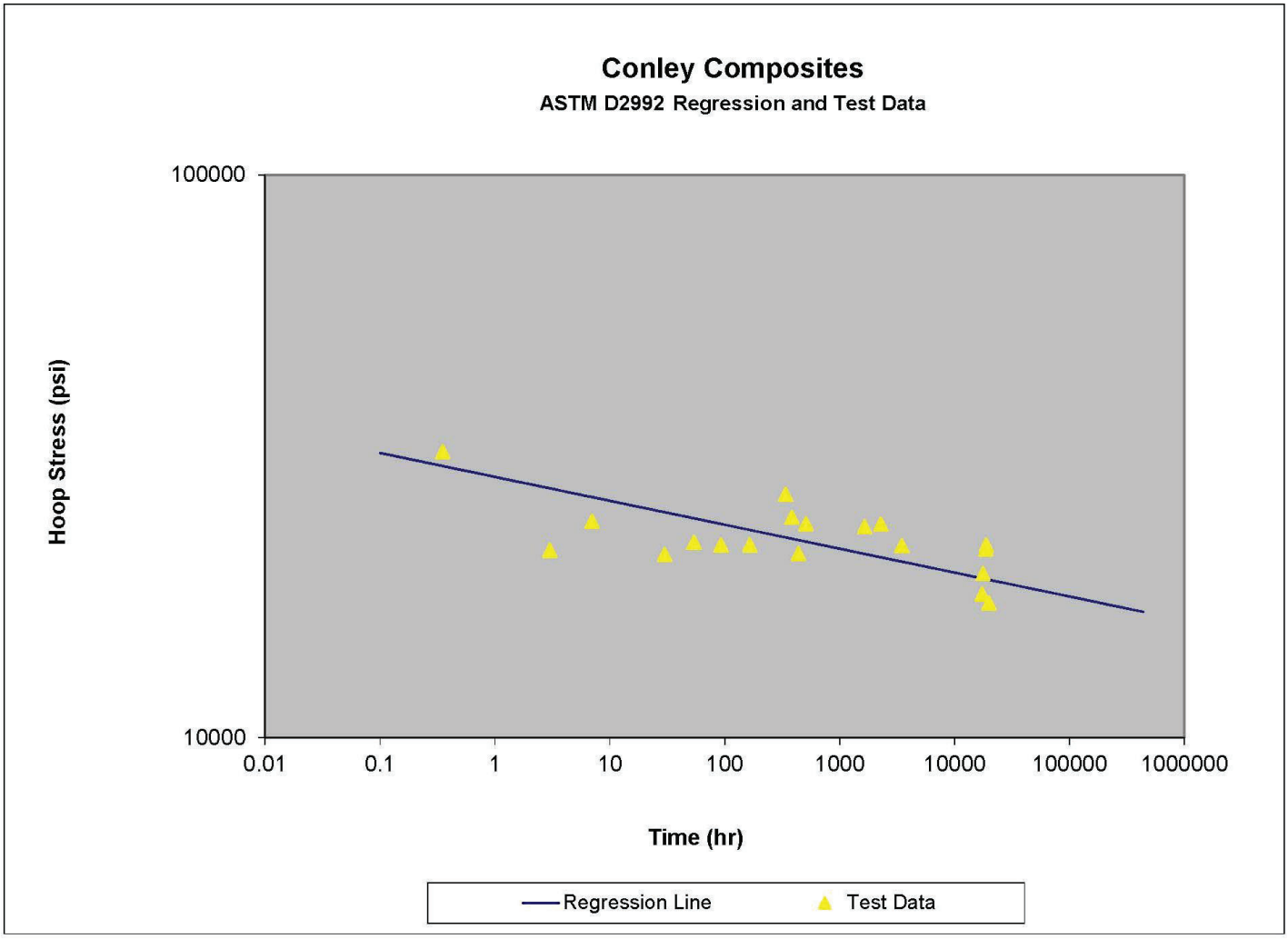

CALCULATION SHEET

Project No. S54413.024	**Calculation No.** S54413.024-M-001	**Rev.** 0	**Page No.** 166 of 192
Title: LERF Basin 41 Buried Piping Analysis			
Prepared By: JD Williams	**Date:** 5/13/20	**Checked By:** JS Huisingh	**Date:** 5/13/20

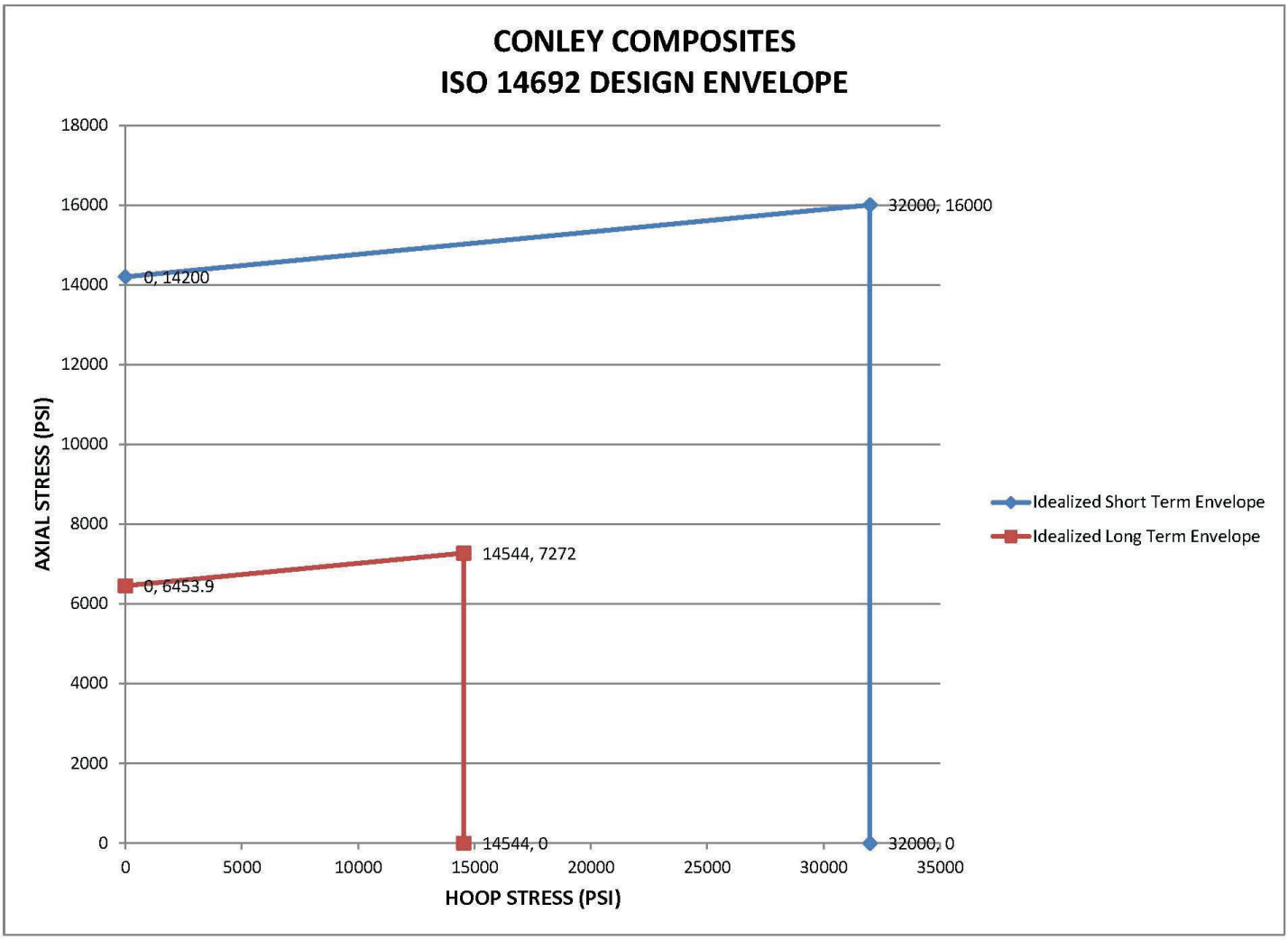

CALCULATION SHEET

Project No. S54413.024	**Calculation No.** S54413.024-M-001	**Rev.** 0	**Page No.** 167 of 192
Title: LERF Basin 41 Buried Piping Analysis			
Prepared By: JD Williams	**Date:** 5/13/20	**Checked By:** JS Huisingh	**Date:** 5/13/20

From: David Chaney <dchaney@andronaco.com>
Sent: Thursday, February 6, 2020 4:51 AM
To: WILLIAMS, JACOB D <jacob.d.williams@sargentlundy.com>; Niki Reyff <nreyff@andronaco.com>
Subject: Re: Connecting to Existing Pipe

Jacob,

(1.) When connecting Conley FRP pipe with FRP pipe from a different manufacture Conley will manufacture an adapter fitting to make the connection if difference in diameter greater than 0.040".

(2.) Bonding of FRP pipe is a mechanical bond that relies on good preparation and cleanliness. Epoxy will bond to Epoxy as well as Vinyl FRP pipe.

(3.) Generally, it is recommended that an anchor be installed when mating to piping from a different manufacture. In this case the anchor will not be required. As stated, the buried pipe will see low temperature fluctuations.

Thank You,
David Chaney

On Wed, Feb 5, 2020 at 4:23 PM WILLIAMS, JACOB D <jacob.d.williams@sargentlundy.com> wrote:

Dave,

I just wanted to have you confirm some of the details that we discussed on our phone call this morning. Please let me know if you agree with the following; or if you do not, or if something needs clarification, can you please change it to read differently as you deem appropriate:

1. Mating up with the same nominally-sized pipe (e.g. 4") is achieved using repair couplings even if the actual ODs of the existing and new pipes differ slightly (~1/16" difference in *OD* is acceptable). If the discrepancy between ODs is much larger than that, Conley Composites will simply fabricate custom couplings that match the ODs of the existing and new pipe.
2. Since the existing and new pipes are made with epoxy-type resins, there will not be any adhesion issues between the glue and the pipes for both the existing and new pipes.
3. The difference in pipe strengths and flexibility between the existing and new pipes will not pose a large issue since the system is double-contained, buried, and the 3" or 4" carrier pipe is internally guided at lengths not to exceed 10'. Also, the buried pipe will not see large ambient fluctuations in temperature.

Thank you,

Jacob Williams, P.E.
Senior Mechanical/Structural Engineer
Sargent & Lundy
1-509-946-3300
Licensed in WA
www.sargentlundy.com

CALCULATION SHEET

Project No. S54413.024	**Calculation No.** S54413.024-M-001	**Rev.** 0	**Page No.** 168 of 192
Title: LERF Basin 41 Buried Piping Analysis			
Prepared By: JD Williams	**Date:** 5/13/20	**Checked By:** JS Huisingh	**Date:** 5/13/20

ATTACHMENT 3

EXISTING FRP PIPE DATA

- Fibercast FRP Pipe Data
- Bondstrand FRP Pipe Data

Sargent & Lundy Engineering Services, Inc.

CALCULATION SHEET

Project No. S54413.024	**Calculation No.** S54413.024-M-001	**Rev.** 0	**Page No.** 169 of 192
Title: LERF Basin 41 Buried Piping Analysis			
Prepared By: JD Williams	**Date:** 5/13/20	**Checked By:** JS Huisingh	**Date:** 5/13/20

Fibercast®
World Leader In Composite Piping Systems

CENTRICAST III™ EP

Third Generation Composites

CENTRICAST III EP offers the benefits and advantages of our heavy-duty centrifugally cast pipe grades with the economics of less expensive filament wound epoxy piping. CENTRICAST III EP is manufactured from high-strength glass fabrics and our highly resilient formulation of epoxy resin. This pipe grade is available either plain end x plain end or bell x plain end.

Fluid Temperatures up to 225° F.

CENTRICAST III EP is manufactured in standard iron pipe sizes 1½"–14" in nominal 20-foot lengths. This quality piping system is rated at 150 psi up to 225° F. Higher pressures with special fittings are available on request. It is lightweight, easy to fabricate and has excellent flow capabilities. Also, CENTRICAST III EP has excellent corrosion and abrasion resistance, making it ideal for many industrial applications.

Superior to Filament Wound Pipe

CENTRICAST III EP is stronger and more corrosion resistant than filament wound pipe. Our unique glass reinforcements have continuous glass fibers oriented in both hoop and axial directions for maximum resistance to piping stresses. The hoop fibers provide excellent internal pressure capabilities, while the axial fibers provide much higher axial tensile and beam bending strength capabilities for unsupported span situations.

100% Pure Resin Corrosion Barrier

CENTRICAST III EP has a corrosion barrier of 50 mils of 100% pure resin. This 100% pure resin barrier provides much better corrosion and abrasion resistance than common glass-filled liners in filament wound pipe. Also, CENTRICAST III EP is easier and less expensive to fabricate than competitive filament wound piping and welded metallic systems.

Sargent & Lundy Engineering Services, Inc.

CALCULATION SHEET

Project No. S54413.024	**Calculation No.** S54413.024-M-001	**Rev.** 0	**Page No.** 170 of 192
Title: LERF Basin 41 Buried Piping Analysis			
Prepared By: JD Williams	**Date:** 5/13/20	**Checked By:** JS Huisingh	**Date:** 5/13/20

Pipe Classification

For general industrial corrosive applications of pipe sizes 1½" – 14", the pipe shall be manufactured by the centrifugal casting process in accordance with ASTM D 2997 classification of RTRP, Type II, Grade 1, Class C, and have a nominal 50 mil pure resin corrosion barrier and a constant smooth IPS OD. The pipe, fittings and adhesive shall be made using the same type epoxy resin and be suitable for at least 150 psi at 225°F. using adhesive socket joints made in accordance with the manufacturer's recommendations. Higher pressures with special fittings are available on request. Field tapering or machining of pipe ends for joining with adhesive socket joints shall not be allowed.

Joining Systems

FIBERCAST®adhesive joints are assembled with our patented, high-strength adhesives. Our fittings are equipped with consistent, predetermined socket dimensions and positive landing areas for the mating pipe ends. Thorough sanding of the pipe OD and the mating fitting's socket is required prior to applying the adhesive for assembly.

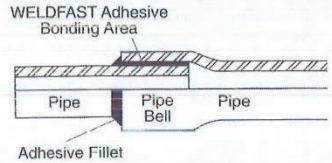

High-strength fabrications to close tolerances are easily accomplished with a minimum amount of time and tools. Order WELDFAST®440 epoxy adhesive for joining CENTRICAST III EP epoxy piping.

CENTRICAST III™EP Pipe

3"/6" (Evap.)

	Nominal Dimensions					Recommended Operating Data			
I.D.	Nominal Pipe Size (Inches)	OD	Total Wall Thickness (Inches)		Reinforcement Thickness (Inches)	Weight Per Foot (lbs.)	Internal Pressure at 225° F. (psi)	External Pressure at 75° F. (psi)	Axial Load at 75° F. (lbs.)	Capacity Gallons Per Foot
	1½	1.900	.140		.090	.45	1,045	865	4,008	.107
	2	2.375	.120		.070	.49	640	265	3,830	.186
3.26	3	3.500	.120	0.03"	.070	.73	430	120	5,695	.434
	4	4.500	.120		.070	.95	330	43	7,355	.740
6.345	6	6.625	.140	0.055"	.090	1.64	290	21	14,455	1.643
	8	8.625	.170		.120	2.60	295	14	23,540	2.801
	10	10.750	.190		.140	3.63	275	11	29,415	4.387
	12	12.750	.190		.140	4.32	235	7	41,860	6.243
	14	14.000	.220		.170	5.49	255	7	59,090	7.502

Unsupported Span (Feet) at Various Temperatures

Nominal Pipe Size (Inches)	75° F.	150° F.	175° F.	200° F.	225° F.
1½	11.8	11.2	11.0	10.7	10.4
2	12.0	11.3	11.1	10.8	10.6
3	13.4	12.7	12.4	12.1	11.8
4	14.3	13.5	13.3	12.9	12.6
6	16.9	15.9	15.6	15.2	14.8
8	19.4	18.3	17.9	17.5	17.0
10	20.0	20.0	19.7	19.2	18.7
12	20.0	20.0	20.0	20.0	19.6
14	20.0	20.0	20.0	20.0	20.0

The above spans are based on a 3-span continuous beam with maximum rated internal pressure and deflection considerations with pipe full of fluid, specific gravity 1.00 and 1/2" maximum deflection. For specific gravities other than 1, the following multipliers may be used:

Specific Gravity	Multipliers
1.25	.95
1.50	.90
2.00	.84
3.00	.76
Air	1.40

Values shown are based on long-term, elevated temperature test data.

Operating External Pressure at Various Temperatures (psi)

Nominal Pipe Size (Inches)	75° F.	150° F.	175° F.	200° F.	225° F.
1½	865	753	718	692	649
2	265	231	220	212	199
3	120	104	100	96	90
4	43	37	35	34	32
6	21	18	17	17	18
8	14	12	12	11	11
10	11	10	9	9	8
12	7	6	6	6	5
14	7	6	6	6	5

Ratings shown are 50% of ultimate.

14.7 psi external pressure is equal to full vacuum.

2

Sargent & Lundy Engineering Services, Inc.

CALCULATION SHEET

Project No. S54413.024	**Calculation No.** S54413.024-M-001	**Rev.** 0	**Page No.** 171 of 192
Title: LERF Basin 41 Buried Piping Analysis			
Prepared By: JD Williams	**Date:** 5/13/20	**Checked By:** JS Huisingh	**Date:** 5/13/20

AMERON

Bondstrand Product Data

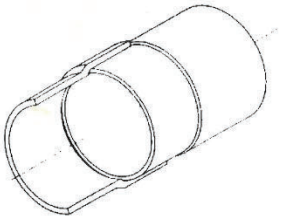

Series 4000 Fiberglass Pipe and Fittings

4"/8" WTP

for corrosive industrial service

Uses and applications	Acid drains Chemical process piping Corrosive slurries Food processing Geothermal Nonoxidizing acids
Listings	Meets USDA requirements for food processing piping under Federal Regulations 21CFR 175.105 and 21CFR 177.2420.
Performance	Working pressure from 150 to 450 psig (1 to 3.1 MPa) depending on pipe size. Withstands full vacuum in most sizes when properly bedded and backfilled. Operating temperatures to 300ºF (150ºC) and continuous service to 250ºF (121ºC) based on media. Subzero temperatures will not adversely affect mechanical properties. For temperatures above 250 to 300ºF contact your Ameron representative. Excellent corrosion resistance over a wide temperature range. See Bondstrand Corrosion Guide FP132 for specific applications. Does, not require thrust blocks at ambient temperatures when properly installed in most soils. Smooth inner liner provides Hazen-Williams coefficient of 150 for lower friction losses and reduced pumping costs.
Joining systems	Quick-Lock® straight/taper adhesive-bonded joint featuring integral pipe stop in bell for predictable, precise laying lengths. Flanges and flanged fittings. Mechanical couplings (temperature and chemical resistance properties of system may be reduced).

© Ameron 1986 FP215 0 04/94 Printed in Holland

Sargent & Lundy Engineering Services, Inc.

CALCULATION SHEET

Project No. S54413.024	**Calculation No.** S54413.024-M-001	**Rev.** 0	**Page No.** 172 of 192
Title: LERF Basin 41 Buried Piping Analysis			
Prepared By: JD Williams	**Date:** 5/13/20	**Checked By:** JS Huisingh	**Date:** 5/13/20

Composition

Pipe
Filament-wound fiberglass reinforced epoxy resin pipe with integral 0.050-inch (1.3 mm) resin-rich reinforced liner.

Nominal Pipe Size (in)	(mm)	ASTM Designation (D2996)
1	25	RTRP-11FE-1112
1½	40	RTRP-11FE-1114
2-6	50-150	RTRP-11FE-1112
8-16	200-400	RTRP-11FE-1113

Epoxy fittings
Filament-wound fittings furnished with reinforced liner using same materials as pipe.
Tees
90° and 45° elbows
Crosses
45° laterals
Nipples and couplings
Tapered body reducers
Molded
Reducing flanges
Plugs and end caps
Epoxy flanges
Filament-wound 1 - 16 inches (25 - 400 mm)
Compression molded 2 - 12 inches (50 - 300 mm)
Blind flanges
Compression molded 2 - 12 inches (50 - 300 mm)
Reducer bushings and plugs
Compression molded 2 - 12 inches (50 - 300 mm)
Metallic saddle reductions
316SS - ¼ - 1½ inches (6 - 40 mm)
Thermosetting adhesives
RP-34 two-part epoxy for field fabrication

Fittings

In all sizes
Elbows
Tees
Flanges and blind flanges Reducers
Nipples and couplings

In 2- to 12-inch (50-300 mm) sizes Compression-molded plugs, reducers and reducing flanges End caps
Crosses
Laterals
Laying lengths of fittings with Quick-Lock ends in 2-to 12-inch sizes match those of ANSI B16.9 steel buttwelding fittings.
Flanged ends match ANSI B16.1 and B16.5 bolt hole pattern and face-to-face dimensions for 150-lb flanges.

2

Sargent & Lundy Engineering Services, Inc.

CALCULATION SHEET

Project No. S54413.024	**Calculation No.** S54413.024-M-001	**Rev.** 0	**Page No.** 173 of 192
Title: LERF Basin 41 Buried Piping Analysis			
Prepared By: JD Williams	**Date:** 5/13/20	**Checked By:** JS Huisingh	**Date:** 5/13/20

Bondstrand 4"/8" (WTP)

Pipe length

Nominal Pipe Size (in)	Nominal Pipe Size (mm)	Random Length (ft)	Random Length (m)
1-11/2	25-40	10	3
2-8	50-200	20,30,40	6,9,12
10-16	250-400	20,40	6,12

Typical pipe dimensions and weights

Nominal Pipe Size (in)	Nominal Pipe Size (mm)	Pipe ID (in)	Pipe ID (mm)	Nominal Wall Thickness* (in)	Nominal Wall Thickness* (mm)	Average** Sectional Area (in)	Average** Sectional Area (mm)	Pipe Wt (lb/ft)	Pipe Wt (kg/m)
1	25	.98	25	.169	4.3	.60	390	.4	.6
11/2	40	1.50	38	.214	5.4	1.11	730	.8	1.2
2	50	2.10	53	.160	4.1	1.13	730	.8	1.2
3	80	3.22	82	.160	4.1	1.70	1100	1.1	1.7
4	100	4.14	105	.206	5.2	2.73	1760	1.9	2.8
6	150	6.20	159	.206	5.2	4.06	2620	2.8	4.2
8	200	8.22	209	.229	5.8	5.83	3760	4.1	6.1
10	250	10.35	263	.229	5.8	7.31	4710	5.1	7.7
12	300	12.35	314	.229	5.8	8.69	5610	6.1	9.1
14	350	13.56	344	.250	6.3	10.40	6680	7.4	11.0
16	400	15.50	394	.286	7.3	13.40	8630	9.6	14.0

Conley OD	Δ	OD (in)
4.48"	0.072	4.552
8.60"	0.078	8.678

<

* Minimum wall thickness shall be not less than 87.5% of nominal wall thickness in accordance with ASTM D2996.

** Use these values for calculating longitudinal thrust.

Typical pipe performance

Nominal Pipe Size (in)	Nominal Pipe Size (mm)	Internal Pressure Rating (psig)	Internal Pressure Rating (MPa)	Ultimate Collapse Pressure * (psig)	Ultimate Collapse Pressure * (MPa)
1	25	600	4.12	7612	52.5
11/2	40	550	3.79	6103	42.1
2	50	450	3.10	635	4.38
3	80	320	2.21	174	1.20
4	100	350	2.41	246	1.70
6	150	250	1.72	71	0.49
8	200	220	1.52	48	0.33
10	250	175	1.21	24	0.17
12	300	150	1.03	14	0.10
14	350	150	1.03	15	0.10
16	400	150	1.03	17	0.12

* At 200ºF (93ºC) using RP-34 epoxy adhesive. For sustained service above 200ºF reduce ratings linearly to 50% of values shown at 250º(121 ºC). Above 250ºF reduce linearly to 0 at 300ºF (149ºC).

* At 70ºF (21ºc) Reduce linearly to 90% at 150ºF (66ºC) and 85% at 250ºF (121ºc).

3

CALCULATION SHEET

Project No. S54413.024	**Calculation No.** S54413.024-M-001	**Rev.** 0	**Page No.** 174 of 192
Title: LERF Basin 41 Buried Piping Analysis			
Prepared By: JD Williams	**Date:** 5/13/20	**Checked By:** JS Huisingh	**Date:** 5/13/20

ATTACHMENT 4

AWWA M54 FIBERGLASS PIPE DESIGN DATA

Sargent & Lundy Engineering Services, Inc.	CALCULATION SHEET		
Project No. S54413.024	**Calculation No.** S54413.024-M-001	**Rev.** 0	**Page No.** 175 of 192
Title: LERF Basin 41 Buried Piping Analysis			
Prepared By: JD Williams	**Date:** 5/13/20	**Checked By:** JS Huisingh	**Date:** 5/13/20

Manual of Water Supply Practices

M45

Fiberglass Pipe Design

Third Edition

American Water Works Association

Copyright American Water Works Association
Provided by IHS Markit under license with AWWA
No reproduction or networking permitted without license from IHS

Copyright © 2014 American Water Works Association. All Rights Reserved.

Licensee=Sargent & Lundy/5911830001, User=williams,jacob
Not for Resale, 01/22/2020 12:28:21 MST

Sargent & Lundy Engineering Services, Inc.

CALCULATION SHEET

Project No. S54413.024	**Calculation No.** S54413.024-M-001	**Rev.** 0	**Page No.** 176 of 192
Title: LERF Basin 41 Buried Piping Analysis			
Prepared By: JD Williams	**Date:** 5/13/20	**Checked By:** JS Huisingh	**Date:** 5/13/20

Manual of Water Supply Practices—M45, Third Edition

Fiberglass Pipe Design

Copyright © 1996, 2005, 2014 American Water Works Association

All rights reserved. No part of this publication may be reproduced or transmitted in any form or by any means, electronic or mechanical, including photocopy, recording, or any information or retrieval system, except in the form of brief excerpts or quotations for review purposes, without the written permission of the publisher.

Disclaimer
The authors, contributors, editors, and publisher do not assume responsibility for the validity of the content or any consequences of their use. In no event will AWWA be liable for direct, indirect, special, incidental, or consequential damages arising out of the use of information presented in this book. In particular, AWWA will not be responsible for any costs, including, but not limited to, those incurred as a result of lost revenue. In no event shall AWWA's liability exceed the amount paid for the purchase of this book.

Project Manager/Senior Technical Editor: Melissa Valentine
Manuals Specialist: Molly Beach
Production Editor: Cheryl Armstrong

Library of Congress Cataloging-in-Publication Data

Fiberglass pipe design manual.
Fiberglass pipe design. -- Third edition / Richard C. Turkopp, Phillip Sharff.
pages cm -- (Manual of water supply practices ; M45)
Developed by the American Water Works Association, Fiberglass Pipe Design Manual Subcommittee chaired by Richard C. Turkopp and the Standards Committee on Thermosetting Fiberglass Reinforced Plastic Pipe chaired by Phillip Sharff.
Originally edition published as: Fiberglass pipe design manual. 1996.
Includes bibliographical references and index.
ISBN 978-1-58123-967-6 -- ISBN 978-1-61300-246-9 (eISBN) 1. Fiberglass pipe--Design and construction. 2. Water-pipes--Design and construction. I. Turkopp, Richard C. II. Sharff, Phillip. III. American Water Works Association. IV. Title.
TA448.F53 2013
628.1'5--dc23
2013028156

ISBN: 978-1-58321-967-6
eISBN: 978-1-61300-246-9

Printed in the United States of America

American Water Works Association
6666 West Quincy Avenue
Denver, CO 80235-3098
awwa.org

Printed on recycled paper

Copyright American Water Works Association
Provided by IHS Markit under license with AWWA
No reproduction or networking permitted without license from IHS

Copyright © 2014 American Water Works Association. All Rights Reserved.

Licensee=Sargent & Lundy/5911579001, User=Williams, Jacob
Not for Resale, 01/22/2020 12:28:21 MST

Sargent & Lundy Engineering Services, Inc.

CALCULATION SHEET

Project No. S54413.024	**Calculation No.** S54413.024-M-001	**Rev.** 0	**Page No.** 177 of 192
Title: LERF Basin 41 Buried Piping Analysis			
Prepared By: JD Williams	**Date:** 5/13/20	**Checked By:** JS Huisingh	**Date:** 5/13/20

6.4 IN SITU SOILS

Content Hidden for Copyright Purposes

6.5 EMBEDMENT MATERIALS

Content Hidden for Copyright Purposes

6.5.1 Soil Stiffness Classes

Class I. Use of Class I materials provides maximum pipe support for a given percent compaction due to low content of sand and fines. With minimum effort these materials

Content Hidden for Copyright Purposes

AWWA Manual M45
Copyright American Water Works Association
Provided by IHS Markit under license with AWWA
No reproduction or networking permitted without license from IHS
Copyright © 2014 American Water Works Association. All Rights Reserved.
Not for Resale, 01/22/2020 12:28:21 MST

Sargent & Lundy Engineering Services, Inc.

CALCULATION SHEET

Project No. S54413.024	**Calculation No.** S54413.024-M-001	**Rev.** 0	**Page No.** 178 of 192
Title: LERF Basin 41 Buried Piping Analysis			
Prepared By: JD Williams	**Date:** 5/13/20	**Checked By:** JS Huisingh	**Date:** 5/13/20

Table 6-1 Soil classes

Soil Classes	Unified Soil Classification System Soil Groups*	American Association of State Highway and Transportation Officials (AASHTO) Soil Groups†
Class I	Crushed rock: ≤ 15% sand, maximum 25% passing the ⅜-in. sieve and maximum 5% passing No. 200 sieve‡	

Content Hidden for Copyright Purposes

NOTES:

* ASTM D2487, Standard Classification of Soils for Engineering Purposes (Unified Soil Classification System).

† AASHTO M145, Classification of Soils and Soil Aggregate Mixtures.

‡ Class I soils have higher stiffness than Class II soils, but data on specific soil stiffness values are not available at the current time. Until such data are available, the soil stiffness of placed, uncompacted Class I soils can be taken to be equivalent to Class II soils compacted to 95% of maximum Standard Proctor Density (SPD 95), and the soil stiffness of compacted Class I soils can be taken to be equivalent to Class II soils compacted to 100% of maximum Standard Proctor Density (SPD 100). Even if placed, uncompacted (i.e., dumped), Class I materials should always be worked into the haunch zone to assure complete placement, see Sec. 6.7.3.

Crushed rock is defined as angular and subangular per ASTM D2488 and D5821.

Content Hidden for Copyright Purposes

Copyright American Water Works Association
hosted by IHS Markit under license with AWWA.
No reproduction or networking permitted without license from IHS

Copyright © 2014 American Water Works Association. All Rights Reserved.
Not for Resale, 01/22/2020 12:28:21 MST

CALCULATION SHEET

Project No. S54413.024	**Calculation No.** S54413.024-M-001	**Rev.** 0	**Page No.** 179 of 192
Title: LERF Basin 41 Buried Piping Analysis			
Prepared By: JD Williams	**Date:** 5/13/20	**Checked By:** JS Huisingh	**Date:** 5/13/20

ATTACHMENT 5

67246-024-RFI-002 – FLUID SPECIFIC GRAVITY

Sargent & Lundy Engineering Services, Inc.

CALCULATION SHEET

Project No. S54413.024	**Calculation No.** S54413.024-M-001	**Rev.** 0	**Page No.** 180 of 192
Title: LERF Basin 41 Buried Piping Analysis			
Prepared By: JD Williams	**Date:** 5/13/20	**Checked By:** JS Huisingh	**Date:** 5/13/20

REQUEST FOR INFORMATION

Section 1 ***(Subcontractor)***

Subcontract No.: 67246 Rel No.: 024 RFI No. *(Subcontract No.-Rel. No.-RFI-Seq. No.-Rev. No.)*: 67246-024-RFI-002-R0

Subcontract Title: LERF Basin 41 Engineering Design

Project Title: LERF Basin 41 Design Project No.: T1P226

RFI Title/Description: Basin 41 pump design criteria

RFI Initiated By: Paul Dorsh Phone: 946-3300 Date of Request: 12/2/2019

E-Mailed To: Phone: Response Requested By: 12/9/2019

Section 2 ***(Subcontractor)***

Reference Drawing or Document:

N/A

Proposed Change to Document(s)? ☐ Yes ☒ No

Description of Request/Recommendation:

The currently installed LERF Basin pumps consist of a Berkeley submersible pump mounted a 6" Franklin submersible motor. The design requires the motor to be mounted below the pump to ensure proper motor cooling has occurred. This inherently locates the pump suction approximately 31" above the basin floor. To perform a full basin pump down this configuration requires Operations to remove the pump assembly and replace with a temporary pump that has a lower suction elevation.

As a part of the Basin 41 design, a new pump assembly will be designed to facilitate a full basin pump down. To aid in the pump selection a few pump design requirements need to be determined:

1. What is the target flow rate of the new pump?
2. What is the maximum operating design temperature?
3. What is the orifice size of FO-60A-001 on H-2-88974? Where is this located on H-2-89183?
4. What is the maximum and minimum differential pressure of Influent Filter(s) 60B-FL-1A? Where are they located on H-2-89183?
5. What is the fluid density to be used in the flow calculation?
6. What is the fluid viscosity to be used in the flow calculation?

Recommendation:

It appears that previous LERF pump designs target flow rates were nominally 140gpm. Industry standard process fluid temperatures are nominally 100F. Flow rates and temperatures above these values are achievable but will reduce the pump options available.

For the 30% submittal 40psid, 1SpG, and 1cP was used for questions #4, #5, and #6 respectively. All values need to be confirmed and/or updated for the 60% design submittal.

Requestor: Paul Dorsh Date: 12/2/2019

Page 1 of 2 A-6003-417 (REV 10)

Sargent & Lundy Engineering Services, Inc.

CALCULATION SHEET

Project No. S54413.024	**Calculation No.** S54413.024-M-001	**Rev.** 0	**Page No.** 181 of 192
Title: LERF Basin 41 Buried Piping Analysis			
Prepared By: JD Williams	**Date:** 5/13/20	**Checked By:** JS Huisingh	**Date:** 5/13/20

REQUEST FOR INFORMATION (Continued)

Page 2 of 2

Section 1 *(Subcontractor)*

Subcontract No.: 67246 Rel No.: 024 RFI No. *(Subcontract No.-Rel. No.-RFI-Seq. No.-Rev. No.)*: 67246-024-RFI-002-R0

Subcontract Title: LERF Basin 41 Engineering Design

Project Title: LERF Basin 41 Design Project No.: T1P226

RFI Title/Description: Basin 41 pump design criteria

Section 3 (WRPS)

Response to Request:

Basin pump design criteria is as follows:

1. Target flow rate for basin pump is 75 gpm (normal) and 150 gpm (max).

2. Nominal process liquid temperature at the LERF basins is 60 deg. F.

3. Orifice size of FO-60A-001 is 1.361" (ref. FO-60A-001 tag details in SmartPlant Foundation (SPF), ECN-642756, and H-2-88974, Sheet 1, Rev 19, Zone F6; see attached). This flow-restricting orifice is located on H-2-89183, Sheet 1, Rev 7 in Zone C3 and on Sheet 2, Rev 1 in Zone C4 (see attached).

4. Maximum differential pressure across influent filters is 60 psid, but filters are normally changed when they reach 40 psid. Assume a differential pressure across clean filters of 2 psid.

5. Use 1.0 specific gravity for fluid density.

6. Use 1.0 cP for fluid viscosity.

Engineer/Position *(if applicable)*: Nathaniel Wilson (PRJ DA) Date:

Contract Change Required?	☐ Yes ☒ No	Contract Change Request/CAL No.:	
Engineering Review Necessary?	☒ Yes ☐ No	Date Sent to Engineering:	12/6/2019
DCN/ECN/EDT Required?	☐ Yes ☒ No	DCN/ECN/EDT No.:	
Applicable TOC-MT Required?	☒ Yes ☐ No	TOC-MT No.:	MT-50497
Clarification Only?	☒ Yes ☐ No		

Responder:

Nathaniel Wilson (PRJ DA) — *Print First and Last Name* — *Signature* — 12/16/19 *Date*

Buyer's Technical Representative (BTR):

Steven Shepherd — *Print First and Last Name* — *Signature* — 12/16/19 *Date*

Page 2 of 2 A-6003-417 (REV 10)

Sargent & Lundy Engineering Services, Inc.

CALCULATION SHEET

Project No. S54413.024	**Calculation No.** S54413.024-M-001	**Rev.** 0	**Page No.** 182 of 192
Title: LERF Basin 41 Buried Piping Analysis			
Prepared By: JD Williams	**Date:** 5/13/20	**Checked By:** JS Huisingh	**Date:** 5/13/20

ATTACHMENT 6

PIPE INSULATION DATA

Sargent & Lundy Engineering Services, Inc.

CALCULATION SHEET

Project No. S54413.024	**Calculation No.** S54413.024-M-001	**Rev.** 0	**Page No.** 183 of 192
Title: LERF Basin 41 Buried Piping Analysis			
Prepared By: JD Williams	**Date:** 5/13/20	**Checked By:** JS Huisingh	**Date:** 5/13/20

PHYSICAL AND THERMAL PROPERTIES OF FOAMGLAS® ONE™ INSULATION

PHYSICAL PROPERTIES	ASTM			EN ISO
	SI	ENGLISH	Method	Method
Absorption of Moisture (Water % by Volume)	0.2%	0.2%	C 240	EN 1609 EN 12087
	Only moisture retained is that adhering to surface cells after immersion			
Water-Vapor Permeability	0.00 perm-cm	0.00 perm-in	E96 Water Method Procedure B	EN 12086 EN ISO 10456
Acid Resistance	Impervious to common acids and their fumes except hydrofluoric acid			
Capillarity	None			
Combustibility & Reaction to Fire	Noncombustible - will not burn Flame Spread 0 Smoke Development 0		E 136 E84	EN ISO 1182 (Class A1)
Composition	Soda-lime silicate glass – inorganic with no fibers or binders			
Compressive Strength, Block	620 kPa	90 psi	C 165 C 240 C 552	EN 826 Method A
	Strength for flat surfaces capped with hot asphalt			
Density	120 kg/m^3	7.5 lb/ft^3	C 303	EN 1602
Dimensional Stability	Excellent—does not shrink, swell or warp			EN 1604 (DS 70/90)
Flexural Strength, Block	480 kPa	70 psi	C 203 C 240	EN 12089 (BS450)
Hygroscopicity	No increase in weight at 90% relative humidity			
Coefficient of Linear Thermal Expansion	9.0 x 10^{-6}/K 25°C to 300°C	5.0 x 10^{-6}/°F 75°F to 575°F	E 228	EN 13471
Maximum Service Temperature	482° C	900° F		
Modulus of Elasticity, Approx.	900 MPa	1.3 x 10^5 psi	C 623	EN 826 Method A1
Thermal Conductivity	W/mK 0.040 @ 10°C 0.042 @ 24°C	Btu-in/hr.ft^2.°F 0.28 @ 50°F 0.29 @ 75°F	C 177 C 518	EN 12667 EN 12939 ($\lambda_{D\ (90/90)}$ ≤ 0.041 W/mK @ 10° C)
Specific Heat	0.84 kJ/kg.K	0.18 Btu/lb.°F		
Thermal Diffusivity	4.2 x 10^{-7} m^2/sec	0.016 ft^2/hr		

Note: FOAMGLAS® ONE™ is manufactured to meet or exceed the minimum requirements of *ASTM C552 Standard Specification for Cellular Glass Insulation* (or most recent revision). Unless otherwise specified, measurements were collected using ASTM guidelines at 24°C (75°F) and are average or typical values recommended for design purposes and not intended as specification or limit values. Values under EN ISO are declared as limit values under the specific set of standard test conditions. Properties may vary with temperature. Where testing method or reporting values differ between ASTM and EN ISO methodologies, values are denoted within parentheses in the EN ISO column.

CALCULATION SHEET

Project No. S54413.024	**Calculation No.** S54413.024-M-001	**Rev.** 0	**Page No.** 184 of 192
Title: LERF Basin 41 Buried Piping Analysis			
Prepared By: JD Williams	**Date:** 5/13/20	**Checked By:** JS Huisingh	**Date:** 5/13/20

ATTACHMENT 7

CONLEY COMPOSITES AWWA M45 EXTERNAL LOADING CALCULATIONS

Sargent & Lundy Engineering Services, Inc.

CALCULATION SHEET

Project No. S54413.024	**Calculation No.** S54413.024-M-001	**Rev.** 0	**Page No.** 185 of 192
Title: LERF Basin 41 Buried Piping Analysis			
Prepared By: JD Williams	**Date:** 5/13/20	**Checked By:** JS Huisingh	**Date:** 5/13/20

```
AWWA Manual M45              Project: 6" Series 30                          <INPUT
Pipe Burial Design          Customer: Sargent & Lundy                       <INPUT
Date:    05/12/20            Contact: Jacob Williams                        <INPUT
       Nominal Pipe Diameter,                    D =      6  in
                                        REINF WALL =   0.11  in
Step 1 - DESIGN CONDITIONS              Total Wall =  0.190  in
       Nominal Pipe Diameter,                    D =      6  in        <INPUT
       Working Pressure,                        Pw =      0  psi       <INPUT
       Surge Pressure, (Est per Sec. 5.7.1.3)   Ps =      0  psi       <INPUT
       Internal Vacuum Pressure,                Pv =      0  psi       <INPUT
       Minimum Burial Depth,                H min =      2  ft        <INPUT
       Maximum Burial Depth,                H max =     12  ft        <INPUT
       Wheel Load, (AASHTO HS-20, Page 55)       P =      0  lb        <INPUT
       Overburden Spec. Wght (at 95% Pr. Dens), Gs =    120  lb/cu ft
       Average Service Temp =                          80  deg F     <INPUT
       Soil Conditions at Depth =
       Hgt of water table above top of pipe @ H Min      0  ft        <INPUT
       Hgt of water table above top of pipe @ H Max      0  ft        <INPUT
       Service Type:      NUCLEAR WASTE WATER DUAL CONTAINMENT HOUSING PIPE <INPUT

Step 2 - PIPE PROPERTIES
       Pressure Class                           Pc =    247  psi
       Cover Thickness                          tc =   0.04  in
       Reinf. Wall Thick.                       tr =   0.11  in
       Liner Thickness                          tl =   0.06  in
       Stiffness Factor                         EI =   1429  lb-in
       Pipe Stiffness                        F/Dy =  323.00  lb/in^2
       HDB (Stress Basis)                          14000  psi
       HDB (Strain Basis)                          0.003  in/in
       Sb (Strain Basis)                        Sb =  0.003  in/in
       Hoop Tensile Modulus                     Eh = 2500000  psi
       Hoop Circumferential Modulus              E = 2500000  psi
       Diameter, mean reinforcement,             D =   6.23  in
Step 3 - INSTALLATION PARAMETERS
       Modulus of soil reaction, Table A.5      E' =   1500  psi
       Deflection coefficient, Table A.2        Kx =  0.103
       From Table A.1                           Kb =  0.189
       Deflection lag factor, (Sec A.3.4.2.1)   D1 =    1.5
****** ********** ******** ******** ******** ** **** ******** ********  *******
Pw   Design Check OK            Pw+Ps   Design Check OK
Str bnd @ Max Defl Design Check OK  Min Cmb Str @ Max Defl Design Check OK

                          --- @ 2.0 ft --        -- @ 12.0 ft ---
Deflection:               0.0%  Design Check OK  0.0%  Design Check OK
BUCKLING - WITHOUT Vacuum, Design Check OK       Design Check OK
Ground Water, WITH Live Loads
BUCKLING - WITH Vacuum,   Design Check OK        Design Check OK
Ground Water, NO Live Loads
```

5/12/2020 p. 1

CALCULATION SHEET

Project No. S54413.024	**Calculation No.** S54413.024-M-001	**Rev.** 0	**Page No.** 186 of 192
Title: LERF Basin 41 Buried Piping Analysis			
Prepared By: JD Williams	**Date:** 5/13/20	**Checked By:** JS Huisingh	**Date:** 5/13/20

AWWA Manual M45 **Project:** 6" Series 30 <INPUT
Pipe Burial Design **Customer:** Sargent & Lundy <INPUT
Date: 05/12/20 **Contact:** Jacob Williams <INPUT
Nominal Pipe Diameter, D = 6 in

Step 4 CHECK DESIGN REQUIREMENTS

1. **Calculate Pressure Class, Pc:** Where Pc <= (HDB/2)(2t/d)

   Pc = 247 (HDB/FS)(2t/d) = 247.2 psi (Eq 5-2)

   Design Check OK

   Note: Pressure is calculated on a stress basis only, since calculations based on strain give equal results.

2. **Check Working Pressure:** Pw<=Pc is the requirement

   Pw =0 <= Pc = 247.2 (Eq 5-3)
   Design Check OK

3. **Check Surge Pressure:** Pw+Ps<=Pc is the requirement

   Pw+Ps = 0 <= Pc = 247.2 (Eq 5-4)
   Design Check OK

4. **Calculate External Loads:** Wc, Wl, If, and Cl

   Wc = (Gs)(H)(D+t)/144 If = 0.766-0.133(H) (Eq 5-9 and 5-11)

   Wc = 10.6 Lb/in at 2.0 ft If = 0.500 at 2.0 ft

   Wc = 63.4 Lb/in at 12.0 ft If = 0.000 at 12.0 ft

   Wl = Cl(P)(1+If)/12 Cl is from ***Table A.3*** (Eq 5-10)

   Wl = 0.00 lb/in at 2.0 ft Cl = 0.056 at 2.0 ft

   Wl = 0.00 lb/in at 12.0 ft Cl = 0.003 at 12.0 ft

CALCULATION SHEET

Project No. S54413.024	**Calculation No.** S54413.024-M-001	**Rev.** 0	**Page No.** 187 of 192
Title: LERF Basin 41 Buried Piping Analysis			
Prepared By: JD Williams	**Date:** 5/13/20	**Checked By:** JS Huisingh	**Date:** 5/13/20

```
AWWA Manual M45            Project: 6" Series 30                <INPUT
Pipe Burial Design        Customer: Sargent & Lundy             <INPUT
Date:    05/12/20          Contact: Jacob Williams              <INPUT
       Nominal Pipe Diameter,                    D =      6  in

    5. Check Deflection, Dy <= .05D is the requirement.

       Dy=(Dl)(Wc+Wl)(Kx)(R^3)/EI+0.061(Ka)(E')(R^3)+Da              (Eq 5-8)

       Using procedure A of Sec A3.4.2.6 Ka =0.75 and Da = 0.00

       Dy at 2.0 ft = 0.000 in      0.000 <= 0.312

                   Design Check OK

       Dy at 12.0 ft = 0.000 in     0.000 <= 0.312

                   Design Check OK

    6. Check Ring Bending Strain at maximum Deflection, Dy.

       Strain ben(6(Dy/D)(t/D)      Str Bnd <= Sb/1.5 is the requireme(Eq 5-6)

       Str Bnd = 0.000002 at 12.0 ft         0.000002 <= 0.002000
                                             Design Check OK

    7. Check Combined Load Strain, Str Comb <= Sb/1.5 is the requirement

       Str Comb = (Pw+Ps)(D)/2(Eh)(t) + Str Bnd                      (Eq 5-22)

       Str Comb = 0.000002 at 12.0 ft        Design Check OK

OR  Str Comb = (Pw+Ps)(D)/2(Eh)(t)+3(Kb)(D)(t)/3(Kx)(Pw+Ps)(D^3+(E)(t^3)

       Str Comb = 0.000117 at 12.0 ft        Design Check OK

       0.000002 is the lower of the two values and < 0.002000
                                             Design Check OK

5/12/2020                                                          p. 3
```

Sargent & Lundy Engineering Services, Inc.

CALCULATION SHEET

Project No. S54413.024	**Calculation No.** S54413.024-M-001	**Rev.** 0	**Page No.** 188 of 192
Title: LERF Basin 41 Buried Piping Analysis			
Prepared By: JD Williams	**Date:** 5/13/20	**Checked By:** JS Huisingh	**Date:** 5/13/20

```
AWWA Manual M45            Project: 6" Series 30          <INPUT
Pipe Burial Design        Customer: Sargent & Lundy       <INPUT
Date:   05/12/20           Contact: Jacob Williams        <INPUT
      Nominal Pipe Diameter,                  D =      6  in

   8. Check Buckling  (Wc+Wl)/D<=qa is the requirement

      NOTE: Without Ground Water or Vacuum


      qa = 1/FS((32)(Rw)(B')(E')(EI/D^3))^.5                    (Eq 5-24b)

      FS =2.0 at 2.0 ft   Rw = 1.000 at 2.0 ft     B' = 0.222 at 2.0 ft
      FS =2.0 at 12.0 ft  Rw = 1.000 at 12.0 ft    B' = 0.353 at 12.0 ft

      Wc+Wl/D = 1.70 psi at 2.0 ft      qa = 125.36 psi at 2.0 ft
      Wc+Wl/D = 10.18 psi at 12.0       qa = 158.20 psi at 12.0 ft

                 Buckling  Design Check OK    2.0 ft
                 Buckling  Design Check OK    12.0 ft



   8a. Check Buckling With Ground Water and with Vacuum

          (Gw)(hw)+Rw(Wc/D)+Pv <= qa is the requirement            (Eq 5-25)

      NOTE:  Without Live Loads

      (Gw)(hw)+Rw(Wc/D)+Pv = 1.696 at 2.0 ft       qa = 125.36 at 2.0 ft
      (Gw)(hw)+Rw(Wc/D)+Pv = 10.177 at 12.0 ft     qa = 158.20 at 12.0 ft

      Buckling    Design Check OK                  2.0 ft
      Buckling    Design Check OK                  12.0 ft

5/12/2020                                                        p. 4
```

Sargent & Lundy Engineering Services, Inc.

CALCULATION SHEET

Project No. S54413.024	**Calculation No.** S54413.024-M-001	**Rev.** 0	**Page No.** 189 of 192
Title: LERF Basin 41 Buried Piping Analysis			
Prepared By: JD Williams	**Date:** 5/13/20	**Checked By:** JS Huisingh	**Date:** 5/13/20

```
AWWA Manual M45              Project: 8" Series 30 Dual Containment Housing   <INPUT
Pipe Burial Design          Customer: Sargent & Lundy                         <INPUT
Date:    05/07/20            Contact: Jacob Williams                          <INPUT
       Nominal Pipe Diameter,                    D =      8  in
                                       REINF WALL =   0.11  in
Step 1 - DESIGN CONDITIONS             Total Wall =  0.190  in
       Nominal Pipe Diameter,                    D =      8  in        <INPUT
       Working Pressure,                        Pw =      0  psi       <INPUT
       Surge Pressure, (Est per Sec. 5.7.1.3)   Ps =      0  psi       <INPUT
       Internal Vacuum Pressure,                Pv =      0  psi       <INPUT
       Minimum Burial Depth,                H min =      2  ft        <INPUT
       Maximum Burial Depth,                H max =     12  ft        <INPUT
       Wheel Load, (AASHTO HS-20, Page 55)       P =      0  lb        <INPUT
       Overburden Spec. Wght (at 95% Pr. Dens), Gs =    120  lb/cu ft
       Average Service Temp =                            80  deg F    <INPUT
       Soil Conditions at Depth =
       Hgt of water table above top of pipe @ H Min      0  ft        <INPUT
       Hgt of water table above top of pipe @ H Max      0  ft        <INPUT
       Service Type:      NUCLEAR WASTE WATER DUAL CONTAINMENT HOUSING PIPE  <INPUT

Step 2 - PIPE PROPERTIES
       Pressure Class                           Pc =    187  psi
       Cover Thickness                          tc =   0.04  in
       Reinf. Wall Thick.                       tr =   0.11  in
       Liner Thickness                          tl =   0.06  in
       Stiffness Factor                         EI =   1429  lb-in
       Pipe Stiffness                        F/Dy =  137.63  lb/in^2
       HDB (Stress Basis)                          14000  psi
       HDB (Strain Basis)                          0.003  in/in
       Sb (Strain Basis)                        Sb =  0.003  in/in
       Hoop Tensile Modulus                     Eh = 2500000  psi
       Hoop Circumferential Modulus              E = 2500000  psi
       Diameter, mean reinforcement,             D =   8.23  in
Step 3 - INSTALLATION PARAMETERS
       Modulus of soil reaction, Table A.5      E' =   1500  psi
       Deflection coefficient, Table A.2        Kx =  0.103
       From Table A.1                           Kb =  0.189
       Deflection lag factor, (Sec A.3.4.2.1)   D1 =    1.5
****** ********** ******** ******** ******** ** **** ******** ********  *******
Pw   Design Check OK          Pw+Ps   Design Check OK
Str bnd @ Max Defl Design Check OK  Min Cmb Str @ Max Defl Design Check OK

                          --- @ 2.0 ft --        -- @ 12.0 ft ---
Deflection:               0.0%  Design Check OK   0.0%  Design Check OK
BUCKLING - WITHOUT Vacuum, Design Check OK        Design Check OK
Ground Water, WITH Live Loads
BUCKLING - WITH Vacuum,    Design Check OK        Design Check OK
Ground Water, NO Live Loads
```

5/7/2020 p. 1

CALCULATION SHEET

Project No. S54413.024	**Calculation No.** S54413.024-M-001	**Rev.** 0	**Page No.** 190 of 192
Title: LERF Basin 41 Buried Piping Analysis			
Prepared By: JD Williams	**Date:** 5/13/20	**Checked By:** JS Huisingh	**Date:** 5/13/20

AWWA Manual M45 **Project:** 8" Series 30 Dual Containment Housing <INPUT
Pipe Burial Design **Customer:** Sargent & Lundy <INPUT
Date: 05/07/20 **Contact:** Jacob Williams <INPUT
Nominal Pipe Diameter, D = 8 in

Step 4 CHECK DESIGN REQUIREMENTS

1. **Calculate Pressure Class, Pc:** Where Pc <= (HDB/2)(2t/d)

   Pc = 187 (HDB/FS)(2t/d) = 187.1 psi (Eq 5-2)

   Design Check OK

   Note: Pressure is calculated on a stress basis only, since calculations based on strain give equal results.

2. **Check Working Pressure:** Pw<=Pc is the requirement

   Pw =0 <= Pc = 187.1 (Eq 5-3)
   Design Check OK

3. **Check Surge Pressure:** Pw+Ps<=Pc is the requirement

   Pw+Ps = 0 <= Pc = 187.1 (Eq 5-4)
   Design Check OK

4. **Calculate External Loads:** Wc, Wl, If, and Cl

   Wc = (Gs)(H)(D+t)/144 If = 0.766-0.133(H) (Eq 5-9 and 5-11)

   Wc = 13.9 Lb/in at 2.0 ft If = 0.500 at 2.0 ft

   Wc = 83.4 Lb/in at 12.0 ft If = 0.000 at 12.0 ft

   Wl = Cl(P)(1+If)/12 Cl is from ***Table A.3*** (Eq 5-10)

   Wl = 0.00 lb/in at 2.0 ft Cl = 0.056 at 2.0 ft

   Wl = 0.00 lb/in at 12.0 ft Cl = 0.003 at 12.0 ft

5/7/2020 p. 2

CALCULATION SHEET

Project No. S54413.024	**Calculation No.** S54413.024-M-001	**Rev.** 0	**Page No.** 191 of 192
Title: LERF Basin 41 Buried Piping Analysis			
Prepared By: JD Williams	**Date:** 5/13/20	**Checked By:** JS Huisingh	**Date:** 5/13/20

```
AWWA Manual M45            Project: 8" Series 30 Dual Containment Housing   <INPUT
Pipe Burial Design        Customer: Sargent & Lundy                         <INPUT
Date:    05/07/20          Contact: Jacob Williams                          <INPUT
       Nominal Pipe Diameter,                    D =        8  in

    5. Check Deflection, Dy <= .05D is the requirement.

       Dy=(Dl)(Wc+Wl)(Kx)(R^3)/EI+0.061(Ka)(E')(R^3)+Da              (Eq 5-8)

       Using procedure A of Sec A3.4.2.6 Ka =0.75 and Da = 0.00

       Dy at 2.0 ft = 0.000 in      0.000 <= 0.412

                   Design Check OK

       Dy at 12.0 ft = 0.000 in     0.000 <= 0.412

                   Design Check OK

    6. Check Ring Bending Strain at maximum Deflection, Dy.

       Strain ben(6(Dy/D)(t/D)      Str Bnd <= Sb/1.5 is the requireme(Eq 5-6)

       Str Bnd = 0.000004 at 12.0 ft        0.000004 <= 0.002000
                                            Design Check OK

    7. Check Combined Load Strain, Str Comb <= Sb/1.5 is the requirement

       Str Comb = (Pw+Ps)(D)/2(Eh)(t) + Str Bnd                      (Eq 5-22)

       Str Comb = 0.000004 at 12.0 ft       Design Check OK

OR  Str Comb = (Pw+Ps)(D)/2(Eh)(t)+3(Kb)(D)(t)/3(Kx)(Pw+Ps)(D^3+(E)(t^3)

       Str Comb = 0.000154 at 12.0 ft       Design Check OK

       0.000004 is the lower of the two values and < 0.002000
                                            Design Check OK

5/7/2020                                                          p. 3
```

Sargent & Lundy Engineering Services, Inc.

CALCULATION SHEET

Project No. S54413.024	**Calculation No.** S54413.024-M-001	**Rev.** 0	**Page No.** 192 of 192
Title: LERF Basin 41 Buried Piping Analysis			
Prepared By: JD Williams	**Date:** 5/13/20	**Checked By:** JS Huisingh	**Date:** 5/13/20

```
AWWA Manual M45            Project: 8" Series 30 Dual Containment Housing  <INPUT
Pipe Burial Design        Customer: Sargent & Lundy                        <INPUT
Date:   05/07/20           Contact: Jacob Williams                         <INPUT
      Nominal Pipe Diameter,                    D =      8  in

   8. Check Buckling  (Wc+Wl)/D<=qa is the requirement

      NOTE: Without Ground Water or Vacuum


      qa = 1/FS((32)(Rw)(B')(E')(EI/D^3))^.5                        (Eq 5-24b)

      FS =2.0 at 2.0 ft   Rw = 1.000 at 2.0 ft     B' = 0.222 at 2.0 ft
      FS =2.0 at 12.0 ft  Rw = 1.000 at 12.0 ft    B' = 0.353 at 12.0 ft

      Wc+Wl/D = 1.69 psi at 2.0 ft      qa = 82.57 psi at 2.0 ft
      Wc+Wl/D = 10.13 psi at 12.0       qa = 104.19 psi at 12.0 ft

                 Buckling  Design Check OK    2.0 ft
                 Buckling  Design Check OK    12.0 ft



   8a. Check Buckling With Ground Water and with Vacuum

          (Gw)(hw)+Rw(Wc/D)+Pv <= qa is the requirement            (Eq 5-25)

      NOTE:  Without Live Loads

      (Gw)(hw)+Rw(Wc/D)+Pv = 1.689 at 2.0 ft       qa = 82.57 at 2.0 ft
      (Gw)(hw)+Rw(Wc/D)+Pv = 10.134 at 12.0 ft     qa = 104.19 at 12.0 ft

      Buckling    Design Check OK                  2.0 ft
      Buckling    Design Check OK                  12.0 ft


5/7/2020                                                          p. 4
```

DOCUMENT RELEASE AND CHANGE FORM

Prepared For the U.S. Department of Energy, Assistant Secretary for Environmental Management
By Washington River Protection Solutions, LLC., PO Box 850, Richland, WA 99352
Contractor For U.S. Department of Energy, Office of River Protection, under Contract DE-AC27-08RV14800

TRADEMARK DISCLAIMER: Reference herein to any specific commercial product, process, or service by trade name, trademark, manufacturer, or otherwise, does not necessarily constitute or imply its endorsement, recommendation, or favoring by the United States government or any agency thereof or its contractors or subcontractors. Printed in the United States of America.

Release Stamp

DATE: May 26,2020

HANFORD RELEASE

1. **Doc No:** RPP-CALC-63782 **Rev.** 00

2. **Title:**
LERF Basin 41 Sample Port Riser Anchor Wall design

3. **Project Number:** T1P226 ☐N/A

4. **Design Verification Required:** ☐Yes ☒No

5. **USQ Number:** ☒ N/A RPP-27195

6. **PrHA Number** **Rev.** ☒ N/A

Clearance Review Restriction Type: public

7. **Approvals**

Title	Name	Signature	Date
Clearance Review	Harrison, Sarah E	*Harrison, Sarah E*	05/26/2020
Design Authority	Wilson, Nathaniel W	*Wilson, Nathaniel W*	04/24/2020
Checker	Santos, Peter P	*Davidson, Ronald W for Santos, Peter P per email*	04/08/2020
Document Control Approval	Meinecke, Kathryn R	*Meinecke, Kathryn R*	05/26/2020
Environmental Protection	Wall, Jeremy M	*Wall, Jeremy M*	04/30/2020
Originator	Davidson, Ronald W	*Davidson, Ronald W*	04/08/2020
Other Approver	McShane, Michael P	*McShane, Michael P*	04/28/2020
Responsible Engineering Manager	Huntington, Matthew R	*Huntington, Matthew R*	05/04/2020

8. **Description of Change and Justification**

Initial Release.

9. **TBDs or Holds** ☒N/A

10. **Related Structures, Systems, and Components**

a. **Related Building/Facilities** ☐N/A	b. **Related Systems** ☐N/A	c. **Related Equipment ID Nos. (EIN)** ☒N/A
ETF FACILITIES LERF FACILITIES	ETF LERF	

11. **Impacted Documents – Engineering** ☒N/A

Document Number	Rev.	Title

12. **Impacted Documents (Outside SPF):**

N/A

13. **Related Documents** ☐N/A

Document Number	Rev.	Title
MT-50497	00	Liquid Effluent Retention Facility (LERF) Basin 41

14. **Distribution**

Name	Organization
Angevine, Brennan T	MISSION ANALYSIS ENGINEERING
Blaak, Whitney S	COGNIZANT SYSTEM ENGINEERING
Demiter, Scott M	ETF OPERATIONS
Foster, Jim	242-A/AW/ETF OPERATIONS
Goessmann, Glen E	ENGINEERING PROGRAMS
Greenhalgh, Aaron M	TANK FARM PROJECTS ENGINEERING
Halgren, Dale L	ETF ENGINEERING
Harris, John W	SAFETY PROGRAM SERVICES RC/P
Joslyn, Cameron C	ETF ENGINEERING
McFerran, Brandon E	242-A/AW/ETF OPERATIONS
McShane, Michael P	ENGINEERING PROGRAMS
Nelson, Richard L	
Omberg Carro, Susan K	NUCLEAR SAFETY
Powers, Daniel J	ETF ENGINEERING
Roosendaal, Gene D	TFP PROJECT MANAGEMENT
Rutherford, Wally	ETF ENGINEERING
Sackett, Tom E	TANK FARM PROJECTS
Samoska, Jerry A	INSTRUMENT & CNTRL ENGINEERING
Shultz, Milton V	NUCLEAR SAFETY
Smith, Gregory E	TANK FARM PROJECTS ENGINEERING

DOCUMENT RELEASE AND CHANGE FORM	**Doc No:** RPP-CALC-63782 **Rev.** 00

14. **Distribution**

Name	**Organization**
Smoot, Bill R	TFP RADCON
Swanson, Brad L	242-A/AW/ETF OPERATIONS
Wall, Jeremy M	RETRVL & CLOSURE/PROJ ENV CMPL
Wilson, Nathaniel W	ETF PROJECTS ENGINEERING

RPP-CALC-63782
Revision 0

LERF Basin 41 Sample Port Riser Anchor Wall Design

Prepared by

RW Davidson
Sargent & Lundy for Washington River Protection Solutions, LLC

Date Published
April 2020

Prepared for the U.S. Department of Energy
Office of River Protection

Contract No. DE-AC27-08RV14800

Approved for Public Release;
Further Dissemination Unlimited

Sargent & Lundy Engineering Services, Inc.	**RPP-CALC-63782, Rev. 0** **CALCULATION COVER SHEET**	**Page No.** 1 of 29 **Date** 4/5/2020 **Rev. No.** 0 **Calculation No:** S54413.024-S-004

Project No.	**Project Title:**	**Client:**
S54413.024	LERF Basin 41 Design	Washington River Protection Solutions, LLC

Title:

LERF Basin 41 Sample Port Riser Anchor Wall Design

Purpose and Objective:

The purpose of this calculation is to analyze the concrete anchor wall for the LERF Basin 41 Sample Port Riser.

Rev. No.	Total Pages		Prepared By	Checked By	PM/TL
0	29	Print Name/ Sign:	RW Davidson, P.E.	PP Santos, P.E.	PM Dorsh, P.E.
		Date:	4/5/2020	4/7/2020	4/7/2020

Revision Description (Revision Description/Affected Pages):

Initial Release.

		Print Name/ Sign:			
		Date:			

Revision Description (Revision Description/Affected Pages):

Sargent & Lundy Engineering Services, Inc.

RPP-CALC-63782, Rev. 0

CALCULATION REVIEW CHECKLIST

Project No.	Calculation No.	Rev.	Page No.
S54413.024	S54413.024-S-004	0	2 of 29

Items Checked	Accept Y	Accept N	Accept N/A	Description of Resolution for Unacceptable Items
1. Cover sheets properly completed.	√			
2. Calculation sheet headers complete with calculation number, revision number, etc.	√			
3. Calculation sheet contents are legible, accurate, and complete per format.	√			
4. Listed attachments included.	√			
5. Calculation objective clearly described.	√			
6. Criteria are suitable and properly referenced to task specific documents.	√			
7. Assumptions and input data selected, described, reasonable, and attached or referenced to task documents.	√			
8. Calculation method identified and appropriate for the design activity.	√			
9. Calculation results reasonable and correctly described in results and conclusions.	√			
10. Physical property calculations generated by CAD software verified via hand calculations.			√	
11. Computer program identified with version and revision.			√	
12. Computer input/output provided or referenced and reasonable.			√	
13. Computer run traceable to calculation (file #, etc.).			√	
14. Computer input/output data and problem type within validation/verification range of use.			√	
15. Computer program validation/verification addressed.			√	
16. Computer operating system in use for calculation preparation is the same as when the software was verified on machine.			√	

Calculation Checking Method	√	Applicable Pages
1. Direct Step-by-Step Check	√	All Pages
2. Reference Chart(s) or Book(s) Comparison (Append Documentation)		
3. Alternate Calculation (Append Documentation)		

Comments:

Preparer (Print Name and Sign):	Date:
RW Davidson, P.E.	4/5/2020
Checker (Print Name and Sign):	**Date:**
PP Santos, P.E.	4/7/2020

Signatures obtained only after discrepancies are corrected and comments are resolved.

Sargent & Lundy Engineering Services, Inc.	RPP-CALC-63782, Rev. 0 **CALCULATION SHEET**		
Project No. S54413.024	**Calculation No.** S54413.024-S-004	**Rev.** 0	**Page No.** 3 of 29
Title: LERF Basin 41 Sample Port Riser Anchor Wall Design			
Prepared By: RW Davidson	**Date:** 4/5/2020	**Checked By:** PP Santos	**Date:** 4/5/2020

TABLE OF CONTENTS

1.0 PURPOSE 4
2.0 METHODOLOGY 4
3.0 DESIGN INPUTS 4
4.0 ASSUMPTIONS 4
5.0 COMPUTER SOFTWARE 4
6.0 RESULTS 4
7.0 REFERENCES 5
8.0 CALCULATIONS 6

Attachments

Attachment 1- HDPE Pipe Data Sheet

Acronyms

ACI	American Concrete Institute
ADH	Adhesive Anchor
AHR	Anchor
ASCE	American Society of Civil Engineers
DCR	Demand-to-Capacity Ratio
HDPE	High-Density Polyethylene
IBC	International Building Code
NDC	Natural Phenomena Design Category
SDR	Standard Dimension Ratio
SPR	Sample Port Riser
WDC	Wind Design Category

1.0 PURPOSE

The purpose of this calculation is to analyze the concrete anchor wall for the LERF Basin 41 Sample Port Riser (SPR).

2.0 METHODOLOGY

Wind, seismic and live loads on the SPR anchor wall are calculated using ASCE 7-10, *Minimum Design Loads on Buildings and Other Structures* and TFC-ENG-STD-06, *Design Loads for Tank Farm Facilities*.

The concrete adhesive eye anchors are analyzed using Chapter 17 of ACI 318, *Building Code Requirements for Structural Concrete and Commentary* and ESR-3187 for Hilti *HIT-HY 200 Adhesive Anchors and Post Installed Reinforcing Bar Connections in Concrete*.

3.0 DESIGN INPUTS

1. The SPR anchor wall is General Service per MT-50497.
2. The minimum concrete compressive strength is 4500 psi, per RPP-SPEC-63632, Section 03 30 00.
3. The anchor eyes are based on fractional stainless steel threaded rods using ASTM F593 material per ESR-3187, Table 3 & 11 and RPP-SPEC-63632, Section 05 0538.
4. Dimension for the SPR anchor wall are based on Drawings H-2-838753 and H-2-838750.
5. The HDPE piping weight and dimensions are based on SDR 11 (160 psi) pipe pressure rating per RPP-SPEC-63632, Section 31 9052 Table 1.

4.0 ASSUMPTIONS

None.

5.0 COMPUTER SOFTWARE

No unverified computer software was used in this analysis. Mathcad®[1] 15.0 was used for the hand calculations. Calculations are checked using a handheld calculator.

6.0 RESULTS

The Hilti®[2] HIT-HY 200 adhesive anchors are adequate using a 5/8” stainless steel anchor eye threaded rods with a 3 1/8” minimum effective embedment depth and maximum embedment of 3 7/8”. The SPR anchor wall is adequate with one layer of #4 rebar spaced 10” on-center horizontally and 6” on-center vertically.

1 Mathcad is a registered trademark of PTC, Inc., Needham, Massachusetts.
2 Hilti and HIT-HY are registered trademarks of Hilti Aktiengesellschaft, Schaan, Liechtenstein

TABLE: Results Summary

Anchor Wall	**DCR**
DCR flexure	0.1
DCR shear	0.05
Eye Bolt Adhesive Anchors	**DCR**
DCR tension	0.03
DCR shear	0.01
DCR per ACI 318, Equation 17.6.3	0.01

7.0 REFERENCES

ACI 318-14, *Building Code Requirements for Structural Concrete and Commentary*, 2014, American Concrete Institute, Farmington Hills, MI.

ACI SP-17 (14), "*The Reinforced Concrete Design Handbook, A Companion to ACI 318-14"* , Volume 1, American Concrete Institute, Farmington Hills, MI.

ASCE 7-2010, *Minimum Design Loads for Buildings and Other Structures*, 2010, American Society of Civil Engineers, Reston, VA.

ESR-3187, Hilti *HIT-HY 200 Adhesive Anchors and Post Installed Reinforcing Bar Connections in Concrete*, (Tables 3, 11, 12 & 14), Issued March 2018, Revised April 2019, ICC Evaluation Services, Whittier, CA.

H-2-838750, SH. 1-2, Rev. 0, *LERF Basin 41 Civil Top Liner, Details*, U.S. Department of Energy, Richland, WA.

H-2-838753, Rev. 0, *LERF Basin 41 Civil Sample Port Riser Details*, U.S. Department of Energy, Richland, WA.

IBC 2015*, International Building Code*, International Code Council, 2015, Country Club Hills, IL.

MT-50497, Rev. 00, Liquid Effluent Retention Facility (LERF) Basin 41, U.S. Department of Energy, Richland, WA.

RPP-SPEC-63632, Rev. 0, *Construction Specification For: LERF Basin 41 Design*, U.S. Department of Energy, Richland, WA.

TFC-ENG-STD-06, Rev. D-2, *Design Loads for Tank Farm Facilities*, U.S. Department of Energy, Richland, WA.

8.0 CALCULATIONS

8.1 Determine Wind Loads

$V := 110mph$ — Wind Speed (TFC-ENG-STD-06, Table 3, WDC-1/NDC-1).

$K_d := 0.90$ — Wind Direction factor (ASCE 7-10, Section 26.6 and Table 26.6-1 for Chimneys, Tanks and Similar Structures).

$K_z := 0.85$ — Velocity Pressure coefficient for Design Exposure C. (ASCE 7-10, Table 29.3-1 for 0-15 ft)

$K_{zt} := 1.0$ — Topographic factor. (ASCE 7-10, Section 26.8.2)

$G := 0.85$ — Gust Effect factor. (ASCE 7-10, Section 26.9.1)

$h := 2 \cdot ft + 11 \cdot in = 2.9\,ft$ $\quad s := h$ — Height of the SPR anchor wall.

$B_{top} := 1 \cdot ft$ — Width at top of the SPR anchor wall.

$B_{bot} := B_{top} + 2(2 \cdot ft + 10 \cdot in) = 6.7\,ft$ — Width at bottom of the SPR anchor wall.

$B_{mean} := \frac{B_{top} + B_{bot}}{2} = 3.8\,ft$ — Mean width of wall.

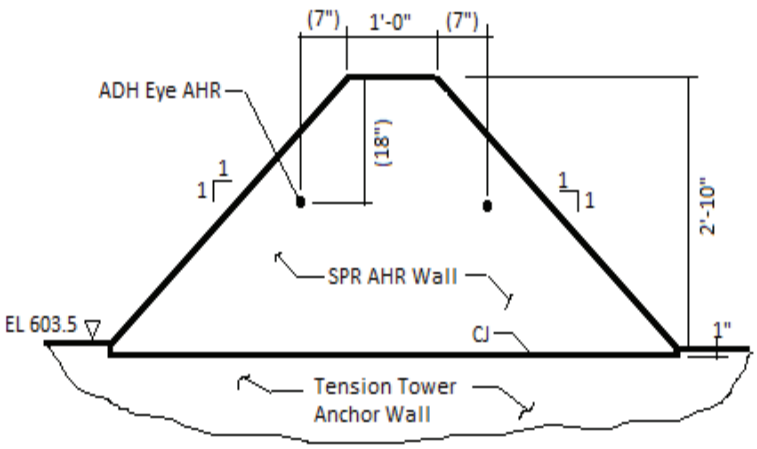

SPR AHR Wall-Inside Face Elevation

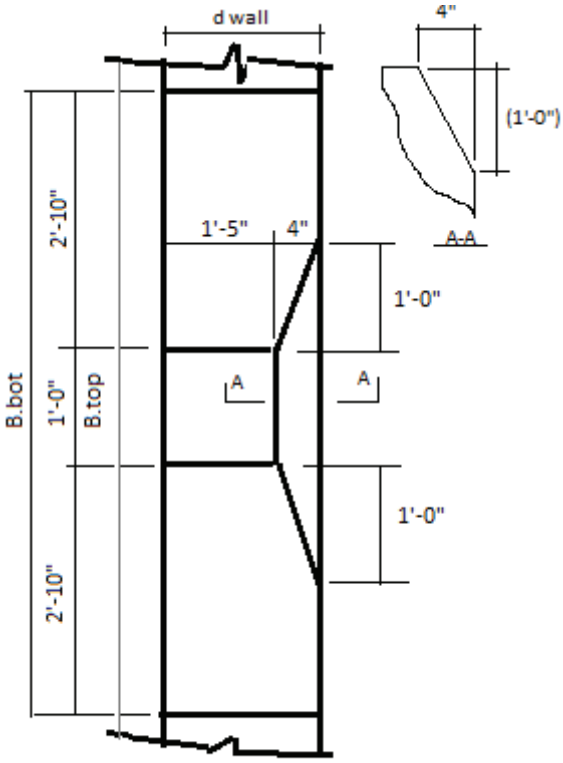

SPR AHR Wall - Plan

$q_z := 0.00256 \cdot K_z \cdot K_{zt} \cdot K_d \cdot \left(\frac{V}{mph}\right)^2 \cdot psf = 23.7 \cdot psf$ — Velocity pressure calculated at mean height h. (ASCE 7-10, Equation 29.3-1)

$Aspect_{ratio} := \frac{B_{mean}}{s} = 1.3$ — Aspect ratio of the SPR anchor wall.

$C_f := 1.45 - 0.3 \cdot 0.05 = 1.44$ — Net force coefficient (interpolated) for case A, wind normal to face, (ASCE 7-10, Figure 29.4-1)

$A_f := B_{mean} \cdot s = 11.2 \cdot ft^2$ — Projected area normal to the wind.

$F_w := q_z \cdot G \cdot C_f \cdot A_f = 323.2\ lbf$ — Design wind load on freestanding wall. (ASCE 7-10, Equation 29.4-1 acting at 0.05*h above geometric center of wall)

8.2 Determine Seismic Loads

$d_{wall} := 1 \cdot ft + 9 \cdot in = 1.8\ ft$ — Thickness of the SPR anchor wall.

$Wt_{wall} := \left[\left[B_{bot} \cdot h - \left(2.75 \cdot ft^2\right)\right] \cdot d_{wall} - \left[\left(\frac{4 \cdot in}{2} \cdot 1 \cdot ft\right) \cdot 1 \cdot ft\right] \cdot 2\right] \cdot 150 \cdot \frac{lbf}{ft^3} = 4.3 \cdot kip$ — Weight of the SPR anchor wall reduced by sloped face area.

$S_{DS} := 0.588$ — Horizontal five-percent damped design spectral response acceleration at short periods. (TFC-ENG-STD-06)

$z_h := 0.0$ — Ratio of the height in structure of point of attachment of component to the average roof height of structure.

$I_p := 1.0$ — Component importance factor for SDC-1 loading. (TFC-ENG-STD-06)

$a_p := 1.0$ — Component amplification factor for other rigid components, limited deformability. (ASCE 7-10, Table 13.5-1)

$R_p := 2.5$ — Component response modification factor for other rigid components, limited deformability.. (ASCE 7-10, Table 13.5-1)

$F_{pnom} := \frac{0.4 \cdot a_p \cdot S_{DS} \cdot \left(Wt_{wall}\right)}{\frac{R_p}{I_p}} [1 + 2(z_h)] = 407.6 \cdot lbf$ — The horizontal seismic force. (ASCE 7-10, Equation 13.3-1)

$F_{pmax} := 1.6 S_{DS} \cdot I_p \cdot \left(Wt_{wall}\right) = 4075.8\ lbf$ — The maximum lateral seismic force. (ASCE 7-10, Equation 13.3-2)

$F_{pmin} := 0.3 S_{DS} \cdot I_p \cdot \left(Wt_{wall}\right) = 764.2\ lbf$ — The minimum lateral seismic force. (ASCE 7-10, Equation 13.3-3)

$F_p := \begin{cases} F_{pmin} & \text{if } F_{pnom} < F_{pmin} \\ F_{pmax} & \text{if } F_{pnom} > F_{pmax} \\ F_{pnom} & \text{otherwise} \end{cases}$ — The minimum lateral force to use for design purposes.

$F_p = 764.2\ lbf$

$F_v := 0.2 S_{DS} \cdot Wt_{wall} = 509.5\ lbf$ — The design vertical seismic force. (ASCE 7-10, Section 13.3.1)

8.3 Determine Flexural Moment on SPR Anchor Wall

The following section determines the flexural moment to withstand the worst case loading.

$ID_{3_pipe} := 2.826 \cdot in$ $\quad Wt_{3_pipe} := 1.39 \cdot plf$ — Weight and dimensions of 3" HDPE pipe based on SDR 11 (160 psi) pressure rating, (See Attachment 1).

$ID_{6_pipe} := 5.349 \cdot in$ $\quad Wt_{6_pipe} := 4.97 \cdot plf$ — Weight and dimensions of 6" HDPE pipe based on SDR 11 (160 psi) pressure rating, (See Attachment 1).

$Wt_{filled} := \frac{\pi \cdot ID_{3_pipe}^2}{4} \cdot 150 \cdot \frac{lbf}{ft^3} + Wt_{3_pipe} = 7.9 \cdot plf$ — Weight of 3" grout filled pipe per foot length.

$Invert_{top} := 603.5 \cdot ft + \frac{(2 \cdot ft + 10 \cdot in)}{2} = 604.9\ ft$ — Estimated invert elevation of sample port riser at inside face of anchor wall.

$Invert_{bot} := 580 \cdot ft$ — Invert elevation of sample port riser at bottom of liner, (See H-2-838750, Section B).

$L_{riser} := (Invert_{top} - Invert_{bot}) \cdot 3 = 74.7\ ft$ — Based on 3:1 slope of top liner.

$Wt_{tot_3} := (L_{riser} \cdot Wt_{filled} \cdot 2 \cdot pipes) = 1184.6\ lbf$ — Total weight of 3" HDPE grout filled pipes.

$Wt_{tot_6} := L_{riser} \cdot Wt_{6_pipe} = 371.5\ lbf$ — Weight of 6" HDPE pipe without weight deduction for slots, conservative.

$angle := \tanh\left(\frac{1}{3}\right) = 18.4 \cdot deg$ — Sample port riser slope angle with respect to horizontal plane.

$F_{h_3pipes} := Wt_{tot_3} \cdot \sin(angle) = 374.3\ lbf$ — Down drag component along length of the 3" HDPE grout filled pipes. Neglect friction between pipes and liner bed, conservative.

$F_{h_6pipe} := Wt_{tot_6} \cdot \sin(angle) = 117.4\ lbf$ — Down drag component along length of the 6" HDPE pipe. Neglect friction between pipe and liner bed, conservative.

$F_{h_pipes} := F_{h_3pipes} + F_{h_6pipe} = 491.7\ lbf$ — Total down drag component.

$F_h := \max(1.6F_{h_pipes}, 1.0F_w + 1.0 \cdot F_{h_pipes}, 1.0 \cdot F_p + 1.0 \cdot F_{h_pipes}) = 1256.0 \cdot lbf$ — LRFD horizontal load combinations per ASCE 7-10, Section 2.3.2.

$F_{v_comb} := \max(1.4 \cdot Wt_{wall}, 1.2 \cdot Wt_{wall} + 1.0 \cdot F_v) = 6065.2\ lbf$ — LRFD vertical load combinations per ASCE 7-10, Section 2.3.2.

$M_{max_wall} := 1.0 \cdot F_p \cdot \frac{2}{3} \cdot h + 1.0 \cdot F_{h_pipes} \cdot \frac{h}{2} = 26437.1 \cdot in \cdot lbf$ — Use LRFD seismic horizontal load combination, previously defined.

NOTE: Per ACI 318, Section 14.4.2.1, walls shall be designed for an eccentricity corresponding to the maximum moment that can accompany the axial load but not less than 0.10 h, where h is the wall thickness. Hence, the moment due to axial load eccentricity is added to the required moment.

$M_{u_wall} := M_{max_wall} + F_{v_comb} \cdot 0.1 \cdot d_{wall} = 3.3 \cdot ft \cdot kip$

8.4 Determine Required Flexural Reinforcement for the SPR Anchor Wall

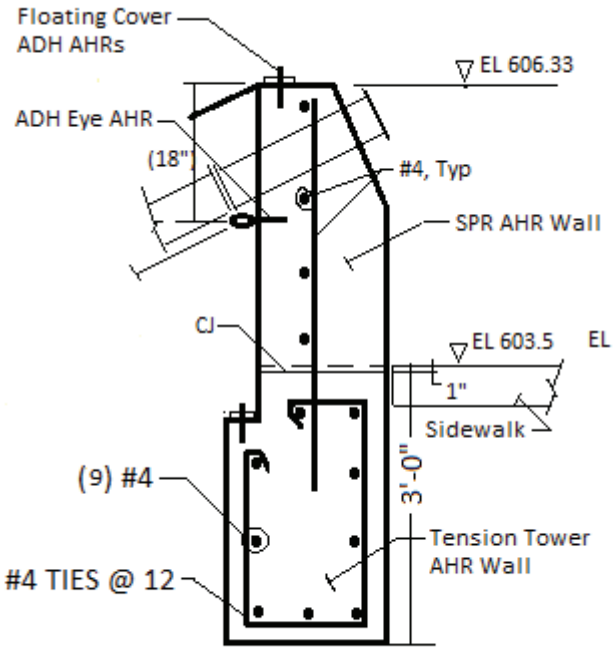

SPR AHR Wall Rebar Section

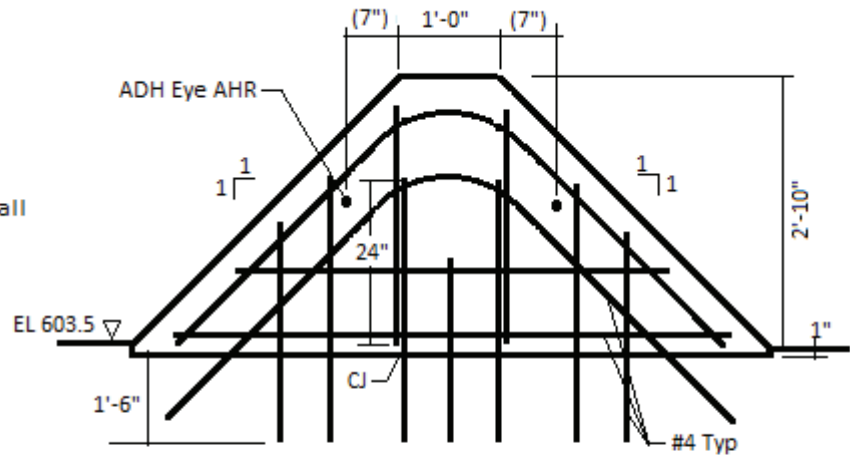

SPR AHR Wall Rebar Elevation

4-#4 @ 10" spg, Horiz
7-#4 @ 6" spg, Vert

$f_c := 4500 \cdot psi$ $f_y := 60000 \cdot psi$ $E_s := 29000 \cdot ksi$ SPR anchor wall material properties.

$h := d_{wall} = 21.0 \cdot in$ Width of the SRP AHR wall.

$d := \frac{h}{3} = 7.0 \cdot in$ Distance from extreme compression fiber to centroid of vertical reinforcing bars, assuming vertical bars are located 1/3 from compression fiber (conservative).

$No := (1\ \ 2\ \ 3\ \ 4\ \ 5\ \ 6\ \ 7\ \ 8\ \ 9\ \ 10\ \ 11\ \ 12\ \ 13\ \ 14\ \ 15\ \ 16\ \ 17\ \ 18)^T$

$d'_{bar} := (0\ \ 0\ \ 0.375\ \ 0.5\ \ 0.625\ \ 0.75\ \ 0.875\ \ 1\ \ 1.128\ \ 1.27\ \ 1.41\ \ 0\ \ 0\ \ 1.693\ \ 0\ \ 0\ \ 0\ \ 2.257)^T \cdot in$

$A'_{bar} := (0\ \ 0\ \ 0.11\ \ 0.20\ \ 0.31\ \ 0.44\ \ 0.6\ \ 0.79\ \ 1\ \ 1.27\ \ 1.56\ \ 0\ \ 0\ \ 2.25\ \ 0\ \ 0\ \ 0\ \ 4)^T \cdot in^2$

Bar size number (bar number, BarNo):

$BarNo := 4$

$x := BarNo$

$A'_{bar_x} = 0.2 \cdot in^2$ $A_{bar} := A'_{bar_x} = 0.2 \cdot in^2$ $d'_{bar_x} = 0.5 \cdot in$

ACI 318-14, 9.6.1.2 A_s minimum shall be the greater of (a) and (b), except as provided in 9.6.1.3.

$$\rho_{min} := \max\left(\frac{3\cdot\sqrt{\frac{f_c}{psi}}\cdot psi}{f_y}, \frac{200\cdot psi}{f_y}\right) = 0.0034$$

ACI 318-14, 9.6.1.3 If A_s provided at every section is at least one-third greater than A_s required by analysis, 9.6.1.1 and 9.6.1.2 need not be satisfied.

Try #4 bar @ 6 in $\quad spa := 6\cdot in$ $\quad$ #4 bars at 6" spacing, in vertical direction.

$b_w := 36\cdot in$ $\quad$ width of wall section considered.

$A_s := \frac{A_{bar}\cdot b_w}{spa} + A_{bar} = 1.4\cdot in^2$ $\quad$ Area of rebar provided at minimum cross section of the wall considered.

$C = 0.85\cdot f_c\cdot b_w\cdot a \qquad 0.85\cdot f_c\cdot b_w = 137.70\cdot\frac{kip}{in}$

$T := A_s\cdot f_y \qquad T = 84\cdot kip$

From the equilibrium equation:

$T = C \qquad T = 0.85\cdot f_c\cdot b_u\cdot a \quad$ or $\quad a := \frac{T}{0.85\cdot f_c\cdot b_w} \qquad a = 0.6\cdot in$

$M_n := T\cdot\left(d - \frac{a}{2}\right) \qquad M_n = 46.9\cdot ft\cdot kip$

$\phi := 0.9$ - for flexure $\qquad \phi M_n := \phi\cdot M_n$

$\phi M_n = 42\cdot ft\cdot kip$ $\quad$ Flexural strength of the wall in vertical direction.

$DCR := \frac{M_{u_wall}}{\phi M_n} = 0.1$ $\quad$ The Demand to Capacity Ratio for the flexural strength of the wall. The DCR is less than 1.0; therefore, **OK**.

<u>Use - (7) #4 @ 6" vertically</u>

$A_{min} := \rho_{min}\cdot h\cdot b_w \qquad A_{min} = 2.5\cdot in^2 \quad > \quad A_s = 1.4\cdot in^2$ $\quad$ The minimum area of steel required for flexure. (ACI 318-14, Section 9.6.1.2)

From the proportion of the factored moment to the nominal strength of the section it can be concluded, that the nominal strength is more than one-third above factored moment, thus the alternative minimum reinforcement requirement is satisfied per ACI 318-14 Section 9.6.1.3

$\frac{4}{3}\cdot M_{u_wall} = 4.4\cdot ft\cdot kip \quad < \quad \phi\cdot M_n = 42.2\cdot ft\cdot kip$ $\quad$ OK

8.5 Development Length of Reinforcement

$\lambda := 1.0$ — Lightweight modification factor for normal weight concrete. (ACI 318-14, Table 25.4.2.4)

$\psi_t := 1.0$ — Casting position modification factor for other. (ACI 318-14, Table 25.4.2.4)

$\psi_e := 1.0$ — Epoxy modification factor. (Lindeburg, pg 55-5 and ACI 318-14, Table 25.4.2.4)

$no_{bar_wall} := 4$ — For development of #4 rebar for SPR AHR wall.

$dia_{bar} := \frac{no_{bar_wall}}{8} in = 0.5 \cdot in$ — Diameter of #4 rebar.

$spa = 6.0 \cdot in \quad > \quad 2 \cdot dia_{bar} = 1.0 \cdot in$ — Clear spacing of bars being developed.

$clr_{cover} := \frac{2}{3} d_{wall} - \frac{dia_{bar}}{2} = 13.7 \cdot in \quad > \quad dia_{bar} = 0.5 \cdot in$ — Clear cover of bars being developed.

$$l_d := \max\left(\frac{\frac{f_y}{psi} \cdot \psi_t \cdot \psi_e}{25 \cdot \lambda \sqrt{\frac{f_c}{psi}}} dia_{bar}, 12in\right) = 17.9 \cdot in$$

Development length of the reinforcement is based on a clear spacing of bars being developed that is greater than 2*dia.bar and a clear cover that is greater than dia.bar, per (ACI-318, Table 25.4.2.2).

NOTE: Round up development length to be a minimum of 18 inches for design

Table 25.5.2.1—Lap splice lengths of deformed bars and deformed wires in tension

$A_{s,provided}/A_{s,required}$[1] over length of splice	Maximum percent of A_s spliced within required lap length	Splice type	ℓ_{st}	
≥ 2.0	50	Class A	Greater of:	$1.0\ell_d$ and 12 in.
	100	Class B	Greater of:	$1.3\ell_d$ and 12 in.
< 2.0	All cases	Class B		

[1]Ratio of area of reinforcement provided to area of reinforcement required by analysis at splice location.

$l_{st} := 1.3 \cdot l_d = 23.3 \cdot in$ — Lap splice length for walls. (ACI 318-14, Section 25.5.2.1)

NOTE: Round up splice length to be a minimum of 24 inches for design.

8.6 Check Temperature and Shrinkage Reinforcement (based on ACI 318-14, Section 24.4.3.2)

Table 24.4.3.2—Minimum ratios of deformed shrinkage and temperature reinforcement area to gross concrete area

Reinforcement type	f_y, psi	Minimum reinforcement ratio	
Deformed bars	< 60,000	0.0020	
Deformed bars or welded wire reinforcement	≥ 60,000	Greater of:	$\frac{0.0018 \times 60,000}{f_y}$
			0.0014

$h_c := \frac{h}{2} = 10.5 \cdot in$ Mean height of the anchor wall.

$b := d_{wall} = 21.0 \cdot in$ Thickness of the anchor wall for rebar design.

$A_{steel} := 0.0018 \cdot b \cdot h_c = 0.40 \cdot in^2$ Area of steel required by temperature and shrinkage. (ACI 318-14, Table 7.6.1.1)

$A_4 := 0.20 in^2$ $n := 4$ Area and number of horizontal #4 bars. (ACI 318-14, Appendix A)

$A_{s_provided} := A_4 \cdot n = 0.8 \cdot in^2 > A_{steel} = 0.40 \cdot in^2$ The current design is adequate as designed with 4-#4 bars horiz & 7-#4 bars vert.

24.4.3.3 The spacing of deformed shrinkage and temperature reinforcement shall not exceed the lesser of ***5h*** and 18 in.

$s_{long} := 10 \cdot in$ < $18 \cdot in$ OK

$s_{trans} := 6 \cdot in$ < $18 \cdot in$ OK

8.7 Check Out-of-Plane Shear Capacity of SPR Anchor Wall

Per ACI-318-14, Section 11.5.5;

11.5.5 *Out-of-plane shear*

11.5.5.1 V_n shall be calculated in accordance with 22.5.

$d = 7.0 \cdot in$

Previously defined distance from extreme compression fiber to centroid of vertical reinforcing bars, assuming vertical bars are located 1/3 from compression fiber (conservative).

$b_w = 36.0 \cdot in$

Previously defined width of wall considered.

$\phi_{shear} := 0.75$

Shear reduction factor. (ACI 318-14, Table 21.2.1)

$\lambda = 1.0$

Modification factor for normalweight concrete. (ACI 318-14, Section 19.2.4.2)

$\phi V_c := \phi_{shear} \cdot 2\lambda \cdot psi \cdot \sqrt{\frac{f_c}{psi}} \cdot b_w \cdot d = 25 \cdot kip$

Out-of-plane concrete shear strength of the evaluated wall section. (per ACI 318-14, Section 22.5.5.1)

$V_u := F_h = 1256.0\ lbf$

Out-of-plane shear demand on SPR AHR wall.

$DCR_{shear} := \frac{V_u}{\phi V_c} = 0.05$

The Demand to Capacity Ratio for the out-of-plane shear strength of the wall. The DCR is less than 1.0; therefore, **OK**.

8.8 Check Anchor Eye Bolts in Accordance with ACI 318-14, Chapter 17

$T_{eye_bolt} := \frac{F_{h_3pipes}}{2 \cdot pipes} \cdot \cos(angle) = 177.6\ lbf$ Tension load on SPR anchor wall eye bolt.

$V_{eye_bolt} := \frac{F_{h_3pipes}}{2 \cdot pipes} \cdot \sin(angle) = 59.1\ lbf$ Shear load on SPR anchor wall eye bolt.

Define Constants

Based on 5/8" diameter ASTM F593 stainless steel threaded rods with 3 7/8" maximum embedment depth

$n_a := 2$ The number of eye bolts per anchor wall.

$s_a := 26 \cdot in$ Minimum spacing of the eye bolts.

$h_{ef} := 3.125\,in$ The effective minimum embedment. (ESR-3187, Table 12 & 14)

$n_{a_t} := 2$ Number of eye bolts resisting tension.

$n_{a_v} := 2$ Number of eye bolts resisting shear.

$f'_c := 4500psi$ Compressive strength of concrete. (See Inputs)

$k_c := 17$ Effectiveness factor for cracked concrete. (ESR-3187, Table 12)

$\psi_{c_N} := 1.0$ Cracked concrete factor for post-installed anchor in cracked concrete. (ACI 318-14, Section 17.4.2.6)

$\phi_{t_s} := 0.65$ Strength reduction factor for steel failure in tension. (ESR-3187, Table 11)

$\phi_{t_c} := 0.65$ Strength reduction factor for concrete breakout failure in tension. (ESR-3187, Table 12)

$\phi_{v_s} := 0.60$ Strength reduction factor for steel failure in shear. (ESR-3187, Table 11).

$\phi_{v_c} := 0.70$ Strength reduction factor for concrete breakout failure in shear. (ESR-3187, Table 12)

$\phi_e := 0.75$ Tensile strength reduction factor for anchors in moderate or high seismic risk zones. (ACI 318-14 Section 17.2.3.4.4)

$\alpha_{v_seis} := 0.70$ Seismic shear reduction factor, (ESR-3187, Table 11).

$\phi_d := 0.65$ Bond strength reduction factor, (ESR-3187, Table 14 for dry & water saturated concrete installation conditions).

$c_{ac} := 2 \cdot h_{ef} = 6.3 \cdot in$ Critical edge distance for adhesive anchors. (ACI 318-14, Section 17.7.6)

$c_{a1} := c_{ac} = 6.3 \cdot in$ Limiting distance from center of anchor to edge of concrete in the direction of applied load. (See ACI 318-14, Figures R17.4.2.1 and R17.5.2.1 for illustration)

$c_{a2} := c_{a1} = 6.3 \cdot in$ Limiting distance from center of anchor to edge of concrete in the direction perpendicular to applied load. (See ACI 318-14, Figures R17.4.2.1 and R17.5.2.1 for illustration)

$c_{a_min} := \min(c_{a1}, c_{a2}) = 6.3 \cdot in$ — The minimum edge distance between the edge of the concrete and the nearest anchor. (Note: Envelopes actual edges distance)

$h_{min} := h_{ef} + 1.25 \cdot in = 4.4 \cdot in$ — The minimum member thickness. (ESR-3187, Table 12)

$h_a := 21in$ — Actual concrete thickness. (H-2-838753)

$d := 0.625in$ — The anchor diameter. (ESR-3187, Table 11)

Determine Steel Strength of Anchor in Tension

$$Individual_Group := \begin{cases} \text{"Analyze anchors individually according to ACI 318-14, Chapter 17"} & \text{if } 3 \cdot h_{ef} \le s_a \\ \text{"Analyze anchors as a group according to ACI 318-14, Section 17.2.1.1"} & \text{otherwise} \end{cases}$$

Individual_Group = "Analyze anchors individually according to ACI 318-14, Chapter 17"

$N_{sa} := 22600lbf$ — The tensile capacity of the anchor is based on ICC-ES Evaluation Report ESR-3187, Table 11, for ASTM F593, stainless steel threaded eye anchor rods.

$\phi N_{sa} := \phi_{t_s} \cdot N_{sa} = 14690.0\ lbf$ — Tensile steel strength incorporating strength reduction factors.

Determine Concrete Breakout Strength of Anchorage in Tension

$$\psi_{ed_N} := \begin{cases} 1 & \text{if } c_{a_min} \ge 1.5 \cdot h_{ef} \\ 0.7 + 0.3 \cdot \dfrac{c_{a_min}}{1.5 \cdot h_{ef}} & \text{otherwise} \end{cases} = 1.0$$

The modification factor for edge effects. (ACI 318-14, Section 17.4.2.5)

$$\psi_{cp_N} := \begin{cases} 1 & \text{if } c_{a_min} \ge c_{ac} \\ \dfrac{\max(c_{a_min}, 1.5 \cdot h_{ef})}{c_{ac}} & \text{otherwise} \end{cases} = 1.0$$

Uncracked concrete pullout factor for post-installed anchors. (ACI 318-14, Section 17.4.2.7)

$\lambda := 1.0$ — Modification factor for normalweight concrete. (ACI 318-14, Section 19.2.4.2)

$N_b := k_c \cdot \lambda \cdot \sqrt{\dfrac{f'_c}{psi}} \cdot \left(\dfrac{h_{ef}}{in}\right)^{1.5} lbf = 6299.9\ lbf$ — Basic concrete breakout strength of a single anchor in tension in cracked concrete. (ACI 318-14, Equation 17.4.2.2a)

$A_{Nco} := 9 \cdot h_{ef}^2 = 87.9 \cdot in^2$ — Projected concrete failure area of a single anchor with an edge distance equal to or greater than 1.5 x h_{ef}. (ACI 318-14, Equation 17.4.2.1c)

$A_{Nc} := (\min(1.5 \cdot h_{ef}, c_{a1}) + s_a + 1.5 \cdot h_{ef}) \cdot (\min(1.5 \cdot h_{ef}, c_{a2}) + 1.5 \cdot h_{ef}) = 331.6 \cdot in^2$

$A_{Nc} := \min(n_a \cdot A_{Nco}, A_{Nc}) = 175.8 \cdot in^2$

Projected concrete failure area of the anchorage group. (ACI 318-14, Section 17.4.2.1 and Figure R17.4.2.1(b))

$e'_N := 0 \cdot in$ — No eccentricity of the anchors in tension. (See ACI 318-14, Fig R17.4.2.4 for illustration)

$\psi_{ec_N} := \dfrac{1}{\left(1 + \dfrac{2 \cdot e'_N}{3 \cdot h_{ef}}\right)} = 1.0$

Modification factor for anchor groups loaded eccentrically in tension. (ACI 318-14, Section 17.4.2.4, Equation 17.4.2.4)

$N_{cbg} := \dfrac{A_{Nc}}{A_{Nco}} \cdot \psi_{ec_N} \cdot \psi_{ed_N} \cdot \psi_{c_N} \cdot \psi_{cp_N} \cdot N_b = 12599.7 \cdot lbf$

Concrete breakout strength of the anchorage in tension. (ACI 318-14, Equation 17.4.2.1b)

$\phi N_{cb} := \phi_e \cdot \phi_{t_c} \cdot N_{cbg} = 6142.4\ lbf$

Tensile breakout strength incorporating strength reduction factors.

Determine Bond Strength of Adhesive Anchors in Tension

$\lambda_a := \lambda = 1.0$

ACI 318-14, Section 17.2.6 and modification factor for normalweight concrete. (ACI 318-14, Section 19.2.4.2)

$\tau_{cr} := 1170 \cdot psi$

Characteristic bond stress in cracked concrete, temperature range A, (ESR-3187, Table 14).

$\tau_{uncr} := 2220 \cdot psi$

Characteristic bond stress in uncracked concrete, temperature range A, (ESR-3187, Table 14).

$d_a := d = 0.6 \cdot in$

Anchor diameter, previously defined.

$N_{ba} := \lambda_a \cdot \tau_{cr} \cdot \pi \cdot d_a \cdot h_{ef} = 7179.0\ lbf$

Basic bond strength of adhesive anchor, (ACI 318-14, Section 17.4.5.2)

$c_{Na} := 10 \cdot d_a \cdot \sqrt{\dfrac{\tau_{uncr}}{1100 \cdot psi}} = 8.9 \cdot in$

Critical edge distance, (ACI 318-14, Equation 17.4.5.1d).

$A_{Nao} := \left(2 \cdot c_{Na}\right)^2 = 315.3 \cdot in^2$

Projected influence area for a single anchor, (ACI 318-14, Equation 17.4.5.1c).

$A_{Na} := \left(2 \cdot c_{Na}\right) \cdot \left(c_{Na} + c_{a_min} + s_a\right) = 730.4 \cdot in^2$

Projected influence area for a group of anchors, (ACI 318-14, Figure R17.4.5.1).

$A_{Na} := n_a \cdot A_{Nao} = 630.7 \cdot in^2$

Limiting value of A.Na per ACI 318-14, Section 17.4.5.1).

$\psi_{ed_Na} := 1.0 \qquad c_{a_min} = 6.3 \cdot in \quad > \quad c_{Na} = 8.9 \cdot in$

Modification factor for edge effects, (ACI 318-14, Equation 17.4.5.4a).

$\psi_{cp_Na} := \dfrac{c_{a_min}}{c_{ac}} \qquad c_{a_min} = 6.3 \cdot in \quad < \quad c_{ac} = 6.3 \cdot in$

Modification factor for adhesive anchors designed for uncracked concrete, (ACI 318-14, Equation 17.4.5.5a).

$e'_N := 0 \cdot in$

Previously defined.

$\psi_{ec_Na} := \dfrac{1}{\left(1 + \dfrac{e'_N}{c_{Na}}\right)} = 1.0$

Modification factor for adhesive anchor group loaded eccentrically in tension. (ACI 318-14, Equation 17.4.5.3)

$N_{ag} := \dfrac{A_{Na}}{A_{Nao}} \cdot \psi_{ec_Na} \cdot \psi_{ed_Na} \cdot \psi_{cp_Na} \cdot N_{ba} = 14358.1\ lbf$

Nominal bond strength of group of adhesive anchors in tension, (ACI 318-14, Equation 17.4.5.1b).

$\phi N_{ag} := \phi_e \cdot \phi_d \cdot N_{ag} = 6999.6\ lbf$

Nominal bond strength in tension for a group of adhesive anchors in tension incorporating strength reduction factors, (ACI 318-14, Equation 17.4.5.1b).

Determine Steel Strength of the Anchorage in Shear

$$\text{Individual_Group} := \begin{cases} \text{"Analyze anchors individually in shear according to ACI 318-14, Chapter 17"} & \text{if } 3\cdot c_{a1} \le s_a \\ \text{"Analyze anchors as a group in shear according to ACI 318-14, Section 17.2.1.1"} & \text{otherwise} \end{cases}$$

Individual_Group = "Analyze anchors individually in shear according to ACI 318-14, Chapter 17"

$V_{sa} := 13560\cdot lbf$ — The steel strength in shear. (ESR-3187, Table 11, ASTM F593)

$\phi V_{sa} := \alpha_{v_seis}\cdot\phi_{v_s}\cdot V_{sa} = 5695.2\ lbf$ — Steel shear strength incorporating strength reduction factors.

Determine Concrete Breakout Strength of the Anchorage in Shear

$$\psi_{ed_V} := \begin{cases} 1.0 & \text{if } c_{a2} \ge 1.5\cdot c_{a1} \\ 0.7 + 0.3\cdot\dfrac{c_{a2}}{1.5\cdot c_{a1}} & \text{otherwise} \end{cases} = 0.9$$

Edge distance factor (Anchors not on a corner). (ACI 318-14, Section 17.5.2.6)

$\psi_{c_V} := 1.0$ — Cracked concrete factor without supplementary reinforcement, (ACI 318-14, Section 17.5.2.7)

$$\psi_{h_V} := \begin{cases} \sqrt{\dfrac{1.5\cdot c_{a1}}{h_a}} & \text{if } h_a < 1.5\cdot c_{a1} \\ 1 & \text{otherwise} \end{cases} = 1.00$$

Thickness modification factor. (ACI 318-14, Section 17.5.2.8)

$d_a := d = 0.6\cdot in$ — The outside diameter of the anchor.

$l_e := \min(8\cdot d_a, h_{ef}) = 3.1\cdot in$ — The load bearing length of anchor for shear. (ACI 318-14, Section 17.5.2.2)

$$V_b := \min\left[7\cdot\left(\frac{l_e}{d_a}\right)^{0.2}\cdot\sqrt{\frac{d_a}{in}}\cdot\lambda\cdot\sqrt{\frac{f'_c}{psi}}\cdot\left(\frac{c_{a1}}{in}\right)^{1.5}\cdot lbf,\ 9\cdot\lambda\cdot\sqrt{\frac{f'_c}{psi}}\cdot\left(\frac{c_{a1}}{in}\right)^{1.5}\cdot lbf\right] = 8003.1\cdot lbf$$

Basic concrete breakout strength of a single anchor in shear in cracked concrete. (ACI 318-14, Section 17.5.2.2)

$A_{Vco} := 4.5\cdot c_{a1}^2 = 175.8\cdot in^2$ — The projected area for a single anchor in a deep member with a distance from edges equal or greater than 1.5 x c_{a1}. (ACI 318-14, Equation 17.5.2.1c)

$A_{Vc} := [(2\cdot 1.5\cdot c_{a1}) + s_a]\cdot\min(1.5\cdot c_{a1}, h_a) = 419.5\cdot in^2$ — Projected concrete failure area of the anchorage. (ACI 318-14, Section 17.5.2.1 and Figure R17.5.2.1b)

$e'_V := 0\cdot in$ — No eccentricity of anchor group in shear.

$$\psi_{ec_V} := \frac{1}{\left(1 + \dfrac{2\cdot e'_V}{3\cdot c_{a1}}\right)} = 1.0$$

Modification factor for anchor group loaded eccentrically in shear. (ACI 318-14, Equation 17.5.2.5)

$$V_{cbg} := \frac{A_{Vc}}{A_{Vco}}\cdot\psi_{ec_V}\cdot\psi_{ed_V}\cdot\psi_{c_V}\cdot\psi_{h_V}\cdot V_b = 17190.7\cdot lbf$$

Nominal concrete breakout strength of anchorage in shear. (ACI 318-14, Equation 17.5.2.1a)

$\phi V_{cb} := \phi_{v_c}\cdot V_{cbg} = 12033.5\ lbf$ — Shear breakout strength incorporating strength reduction factors.

Determine Pryout Strength of the Anchorage in Shear

$k_{cp} := \begin{cases} 1 & \text{if } h_{ef} < 2.5\text{in} \\ 2 & \text{otherwise} \end{cases} = 2.0$

Coefficient for pryout strength. (ACI 318-14, Section 17.5.3.1)

$N_{cbg} = 12599.7\ \text{lbf}$ $N_{ag} = 14358.1\ \text{lbf}$

Use the lesser of N.cbg from Equation 17.4.2.1b or Nag from 17.4.5.1b per ACI 318-14, Section 17.5.3.1).

$V_{cp} := k_{cp} \cdot N_{cbg} = 25199.4\ \text{lbf}$

The nominal pryout strength of the anchorage in shear per ACI 318-14, Equation 17.5.3.1a.

$\phi V_{cp} := \phi_{v_c} \cdot V_{cp} = 17639.6\ \text{lbf}$

Shear pryout strength incorporating strength reduction factors.

Determine Governing Failure Strength

$\text{Govern}_t := \begin{cases} \text{"Steel failure governs (Ductile Failure)."} & \text{if } \phi N_{sa} \le \min(\phi N_{cb}, \phi N_{ag}) \\ \text{"Concrete breakout governs (Brittle Failure)."} & \text{if } \phi N_{cb} \le \min(\phi N_{sa}, \phi N_{ag}) \\ \text{"Bond strength governs (Brittle Failure)."} & \text{otherwise} \end{cases}$

$\text{Govern}_t = \text{"Concrete breakout governs (Brittle Failure)."}$

$\text{Tensile}_{govern} := \begin{cases} \phi N_{sa} & \text{if } \phi N_{sa} \le \min(\phi N_{cb}, \phi N_{ag}) \\ \phi N_{cb} & \text{if } \phi N_{cb} \le \min(\phi N_{sa}, \phi N_{ag}) \\ \phi N_{ag} & \text{otherwise} \end{cases}$

The governing allowable tensile capacity of the anchorage.

$\text{Tensile}_{govern} = 6142\ \text{lbf}$

$T_{eye_bolt} = 177.6\ \text{lbf}$

$\text{Tension_Check} := \begin{cases} \text{"Anchor capacity in tension is OK."} & \text{if } \text{Tensile}_{govern} > T_{eye_bolt} \\ \text{"Anchor capacity in tension is NOT OK"} & \text{otherwise} \end{cases}$

$\text{Tension_Check} = \text{"Anchor capacity in tension is OK."}$

Check to determine the adequacy of the anchors in tension.

$$DCR_{tens} := \frac{T_{eye_bolt}}{\text{Tensile}_{govern}} = 0.03$$

$$Govern_v := \begin{cases} \text{"Steel failure governs (Ductile Failure)."} & \text{if } \phi V_{sa} \le \min(\phi V_{cb}, \phi V_{cp}) \\ \text{"Concrete breakout governs (Brittle Failure)."} & \text{if } \phi V_{cb} < \min(\phi V_{sa}, \phi V_{cp}) \\ \text{"Concrete pryout governs (Brittle Failure)."} & \text{otherwise} \end{cases}$$

$Govern_v$ = "Steel failure governs (Ductile Failure)."

$$Shear_{govern} := \begin{cases} \phi V_{sa} & \text{if } \phi V_{sa} \le \min(\phi V_{cb}, \phi V_{cp}) \\ \phi V_{cb} & \text{if } \phi V_{cb} < \min(\phi V_{sa}, \phi V_{cp}) \\ \phi V_{cp} & \text{otherwise} \end{cases}$$

The governing allowable shear capacity of the anchorage.

$Shear_{govern} = 5695\,lbf$

$V_{eye_bolt} = 59.1\,lbf$

$$Shear_Check := \begin{cases} \text{"Anchor capacity in shear is OK."} & \text{if } Shear_{govern} > V_{eye_bolt} \\ \text{"Anchor capacity in shear is NOT OK"} & \text{otherwise} \end{cases}$$

Shear_Check = "Anchor capacity in shear is OK."

Check to determine the adequacy of the anchors in shear.

$$DCR_{shear} := \frac{V_{eye_bolt}}{Shear_{govern}} = 0.01$$

$$DCR := \begin{cases} DCR_{tens} & \text{if } DCR_{shear} \le 0.2 \\ DCR_{shear} & \text{if } DCR_{tens} \le 0.2 \\ \frac{1}{1.2} \cdot (DCR_{tens} + DCR_{shear}) & \text{otherwise} \end{cases} = 0.01$$

The DCR ratio is less than 1.0; Therefore, **OK** ACI 318-14, Section 17.6.

ATTACHMENT 1

HDPE PIPE DATA SHEET

Sargent & Lundy Engineering Services, Inc.

RPP-CALC-63782, Rev. 0

CALCULATION SHEET

Project No. S54413.024	**Calculation No.** S54413.024-S-004	**Rev.** 0	**Page No.** 21 of 29
Title: LERF Basin 41 Sample Port Riser Anchor Wall Design			
Prepared By: RW Davidson	**Date:** 4/5/2020	**Checked By:** PP Santos	**Date:** 4/5/2020

PE 3408 Industrial Piping System
Pipe Data and Pressure Ratings

PRESSURE RATING		255 PSI SDR 7.3		200 PSI SDR 9		160 PSI SDR 11		130 PSI SDR 13.5		100 PSI SDR 17		50 PSI SDR 32.5	
IPS PIPE SIZE	O.D. SIZE (IN.)	MIN. WALL (in) AVG. ID (in)	WEIGHT LB/FT	MIN. WALL (in) AVG. ID (in)	WEIGHT LB/FT	MIN. WALL (in) AVG. ID (in)	WEIGHT LB/FT	MIN. WALL (in) AVG. ID (in)	WEIGHT LB/FT	MIN. WALL (in) AVG. ID (in)	WEIGHT LB/FT	MIN. WALL (in) AVG. ID (in)	WEIGHT LB/FT
2"	2.375	.325 1.686	.91	.264 1.815	.76	.216 1.917	.64	—	—	—	—	—	—
3"	3.500	.479 2.485	1.98	.389 2.675	1.65	.318 2.826	1.39	.259 2.951	1.15	.206 3.063	.93	—	—
4"	4.500	.616 3.194	3.27	.500 3.440	2.74	.409 3.633	2.30	.333 3.794	1.90	.265 3.938	1.54	—	—
†5"	5.563	.762 3.948	5.00	.618 4.253	4.18	.506 4.490	3.50	.412 4.690	2.91	.327 4.870	2.35	—	—
6"	6.625	.908 4.700	7.09	.736 5.065	59.3	.602 5.349	4.97	.491 5.584	4.13	.390 5.798	3.34	.204 6.193	1.80
7"	7.125	—	—	—	—	—	—	—	—	.420 6.237	3.87	.220 6.661	2.09
8"	8.625	1.182 6.119	12.01	.958)6.594	10.05	.785 6.963	8.43	.639 7.270	7.00	.508 7.550	5.66	.265 8.063	3.05
10"	10.75	1.473 7.627	18.66	1.194 8.219	15.62	.978 8.679	13.10	.797 9.062	10.89	.633 9.410	8.80	.331 10.048	4.75
12"	12.75	1.747 9.046	26.25	1.417 9.746	21.97	1.160 10.293	18.43	.945 10.749	15.31	.750 11.160	12.36	.392 11.919	6.67
14"	14.00	1.918 9.046	31.64	1.556 10.701	26.49	1.273 11.301	22.20	1.037 11.802	18.44	.824 12.253	14.91	.431 13.086	8.05
16"	16.00	2.192 11.353	41.34	1.778 12.231	34.61	1.455 12.915	29.00	1.185 13.488	24.09	.941 14.005	19.46	.492 14.957	10.51
18"	18.00	2.466 12.772	52.31	2.000 13.760	43.79	1.636 14.532	36.69	1.333 15.174	30.48	1.059 15.755	24.65	.554 16.826	13.29
20"	20.00	2.740 14.191	64.57	2.222 15.289	54.05	1.818 16.146	45.30	1.481 16.860	37.64	1.176 17.507	30.42	.615 18.696	16.41
22"	22.00	—	—	2.444 16.819	65.41	2.000 17.760	54.82	1.630 18.544	45.56	1.294 19.257	36.81	.677 20.565	19.87
24"	24.00	—	—	2.667 18.346	77.85	2.182 19.374	65.24	1.778 20.231	54.22	1.412 21.007	43.82	.738 22.435	23.62
†26"	26.00	—	—	2.889 19.875	—	2.364 20.988	76.58	1.926 21.917	63.63	1.529 22.759	51.40	.800 24.304	27.74
†28"	28.00	—	—	—	—	2.545 22.605	88.79	2.074 23.603	73.76	1.647 25.508	59.62	.862 26.173	32.20
†30"	30.00	—	—	—	—	2.727 24.219	101.94	2.222 25.289	84.68	1.765 26.528	68.45	.923 28.043	36.92
†32"	32.00	—	—	—	—	2.909 25.833	115.99	2.370 26.976	96.35	1.882 28.010	77.86	.985 29.912	42.04
†34"	34.00	—	—	—	—	3.090 27.450	130.92	2.519 28.660	108.80	2.000 29.760	87.91	1.046 31.782	47.44
†36"	36.00	—	—	—	—	—	—	—	—	2.118 31.510	98.56	1.108 33.651	53.18

NOTES:

- Additional SDR's and pressure ratings available, including sizes through 54".
- See Section B for Polyethylene Pipe Fittings.
- Industrial PE (polyethylene) pipe sizes are identified by IPS (steel pipe size) diameters which designate the nominal inside diameter for 12" IPS AND SMALLER PIPE, AND O.D. (outside diameter) for 14" IPS and larger pipe.
- The ID on IPS PE 3408 can be significantly smaller than the nominal pipe size.
- Coefficient of thermal expansion is over 10 times that of DI and steel and 3 times that of PVC. In practical terms, this means HDPE pipe shrinks 10 times as much as DI and 3 times as much as PVC when it gets cold. This can loosen any fittings installed on it. Also, it's length shrinks 1 inch per 100 feet of pipe length with a 10° F temperature drop, making it likely to pull out of unrestrained couplings.

†Subject to minimum order quantities and availability of tooling.

www.ejprescott.com A-27

ATTACHMENT 2

ICC-ES EVALUATION REPORT

ESR -3187

HILTI HIT-HY 200 ADHESIVE ANCHORS AND POST INSTALLED REINFORCING BAR CONNECTIONS IN CONCRETE

(EXCERPT)

Sargent & Lundy Engineering Services, Inc.	RPP-CALC-63782, Rev. 0 **CALCULATION SHEET**		
Project No. S54413.024	**Calculation No.** S54413.024-S-004	**Rev.** 0	**Page No.** 23 of 29
Title: LERF Basin 41 Sample Port Riser Anchor Wall Design			
Prepared By: RW Davidson	**Date:** 4/5/2020	**Checked By:** PP Santos	**Date:** 4/5/2020

ICC EVALUATION SERVICE

In Cooperation with Innovation RESEARCH LABS

Most Widely Accepted and Trusted

ICC-ES Evaluation Report

ICC-ES | (800) 423-6587 | (562) 699-0543 | www.icc-es.org

ESR-3187

Issued 03/2018
Revised 04/2019
This report is subject to renewal 03/2020.

DIVISION: 03 00 00—CONCRETE
SECTION: 03 16 00—CONCRETE ANCHORS
DIVISION: 05 00 00—METALS
SECTION: 05 05 19—POST-INSTALLED CONCRETE ANCHORS

REPORT HOLDER:

HILTI, INC.

EVALUATION SUBJECT:

HILTI HIT-HY 200 ADHESIVE ANCHORS AND POST INSTALLED REINFORCING BAR CONNECTIONS IN CONCRETE

ICC ES ICC ES PMG ICC ES LISTED

"2014 Recipient of Prestigious Western States Seismic Policy Council (WSSPC) Award in Excellence"

A Subsidiary of ICC INTERNATIONAL CODE COUNCIL

ICC-ES Evaluation Reports are not to be construed as representing aesthetics or any other attributes not specifically addressed, nor are they to be construed as an endorsement of the subject of the report or a recommendation for its use. There is no warranty by ICC Evaluation Service, LLC, express or implied, as to any finding or other matter in this report, or as to any product covered by the report.

ANSI ACCREDITED ISO/IEC 17065 Product Certification Body #1000

Copyright © 2019 ICC Evaluation Service, LLC. All rights reserved.

Sargent & Lundy Engineering Services, Inc.	RPP-CALC-63782, Rev. 0 CALCULATION SHEET		
Project No. S54413.024	**Calculation No.** S54413.024-S-004	**Rev.** 0	**Page No.** 24 of 29
Title: LERF Basin 41 Sample Port Riser Anchor Wall Design			
Prepared By: RW Davidson	**Date:** 4/5/2020	**Checked By:** PP Santos	**Date:** 4/5/2020

ICC EVALUATION SERVICE — Most Widely Accepted and Trusted

ICC-ES Evaluation Report

ESR-3187

Reissued March 2018
Revised April 2019
This report is subject to renewal March 2020.

www.icc-es.org | (800) 423-6587 | (562) 699-0543 — *A Subsidiary of the International Code Council®*

DIVISION: 03 00 00—CONCRETE
Section: 03 16 00—Concrete Anchors

DIVISION: 05 00 00—METALS
Section: 05 05 19—Post-installed Concrete Anchors

REPORT HOLDER:

HILTI, INC.

EVALUATION SUBJECT:

HILTI HIT-HY 200 ADHESIVE ANCHORS AND POST INSTALLED REINFORCING BAR CONNECTIONS IN CONCRETE

1.0 EVALUATION SCOPE

Compliance with the following codes:

- 2018, 2015, 2012, and 2009 *International Building Code®* (IBC)
- 2018, 2015, 2012, and 2009 *International Residential Code®* (IRC)
- 2013 *Abu Dhabi International Building Code* (ADIBC)†

†The ADIBC is based on the 2009 IBC. 2009 IBC code sections referenced in this report are the same sections in the ADIBC.

For evaluation for compliance with codes adopted by the Los Angeles Department of Building and Safety (LADBS), see ESR-3187 LABC and LARC Supplement.

For evaluation for compliance with the *National Building Code of Canada®* (NBCC), see listing report ELC-3187.

Property evaluated:

Structural

2.0 USES

Adhesive anchors and reinforcing bars installed using the Hilti HIT-HY 200 Adhesive Anchoring System and Post-Installed Reinforcing Bar System are used to resist static, wind and earthquake (Seismic Design Categories A through F) tension and shear loads in cracked and uncracked normal-weight concrete having a specified compressive strength, f'_c, of 2,500 psi to 8,500 psi (17.2 MPa to 58.6 MPa) [minimum of 24 MPa is required under ADIBC Appendix L, Section 5.1.1].

The anchor system complies with anchors as described in Section 1901.3 of the 2018 and 2015 IBC, Section 1909 of the 2012 IBC and is an alternative to cast-in-place anchors described in Section 1908 of the 2012 IBC, and Sections 1911 and 1912 of the 2009 IBC. The anchor systems may also be used where an engineered design is submitted in accordance with Section R301.1.3 of the IRC.

The post-installed reinforcing bar system is an alternative to cast-in-place reinforcing bars governed by ACI 318 and IBC Chapter 19.

3.0 DESCRIPTION

3.1 General:

The Hilti HIT-HY 200 Adhesive Anchoring System and Post-Installed Reinforcing Bar System are comprised of the following components:

- Hilti HIT-HY 200 adhesive packaged in foil packs (either Hilti HIT-HY 200-A or Hilti HIT-HY 200-R)
- Adhesive mixing and dispensing equipment
- Equipment for hole cleaning and adhesive injection

The Hilti HIT-HY 200 Adhesive Anchoring System may be used with continuously threaded rod, Hilti HIT-Z(-R) anchor rods, Hilti HIS-(R)N internally threaded inserts or deformed steel reinforcing bars as depicted in Figure 1. The Hilti HIT-HY 200 Post-Installed Reinforcing Bar System may only be used with deformed steel reinforcing bars as depicted in Figure 2. The primary components of the Hilti Adhesive Anchoring and Post-Installed Reinforcing Bar Systems, including the Hilti HIT-HY 200 Adhesive, HIT-RE-M static mixing nozzle and steel anchoring elements, are shown in Figure 6 of this report.

The manufacturer's printed Installation instructions (MPII), as included with each adhesive unit package, are replicated as Figure 9.

3.2 Materials:

3.2.1 Hilti HIT-HY 200 Adhesive: Hilti HIT-HY 200 Adhesive is an injectable, two-component hybrid adhesive. The two components are separated by means of a dual-cylinder foil pack attached to a manifold. The two components combine and react when dispensed through a static mixing nozzle attached to the manifold. Hilti HIT-HY 200 is available in 11.1-ounce (330 mL) and 16.9-ounce (500 mL) foil packs. The manifold attached to each foil pack is stamped with the adhesive expiration date. The shelf life, as indicated by the expiration date, applies to an unopened foil pack stored in a dry, dark environment and in accordance with Figure 9.

Hilti HIT-HY 200 Adhesive is available in two options, Hilti HIT-HY 200-A and Hilti HIT-HY 200-R. Both options are subject to the same technical data as set forth in this report. Hilti HIT-HY 200-A will have shorter working times

ICC-ES Evaluation Reports are not to be construed as representing aesthetics or any other attributes not specifically addressed, nor are they to be construed as an endorsement of the subject of the report or a recommendation for its use. There is no warranty by ICC Evaluation Service, LLC, express or implied, as to any finding or other matter in this report, or as to any product covered by the report.

Copyright © 2019 ICC Evaluation Service, LLC. All rights reserved.

and curing times than Hilti HIT-HY 200-R. The packaging for each option employs a different color, which helps the user distinguish between the two adhesives.

3.2.2 Hole Cleaning Equipment:

3.2.2.1 Standard Equipment: Standard hole cleaning equipment, comprised of steel wire brushes and air nozzles, is described in Figure 9 of this report.

3.2.2.2 Hilti Safe-Set™ System: The Hilti Safe-Set™ with Hilti HIT-HY 200 consists of one of the following:

- For the Hilti HIT-Z and HIT-Z-R anchor rods, hole cleaning is not required after drilling the hole, except if the hole is drilled with a diamond core drill bit.
- For the elements described in Sections 3.2.4.2 through 3.2.4.4 and Section 3.2.5, the Hilti TE-CD or TE-YD hollow carbide drill bit with a carbide drilling head conforming to ANSI B212.15. Used in conjunction with a Hilti vacuum with a minimum value for the maximum volumetric flow rate of 129 CFM (61 ℓ/s), the Hilti TE-CD or TE-YD drill bit will remove the drilling dust, automatically cleaning the hole.

3.2.3 Hole Preparation Equipment:

3.2.3.1 Hilti Safe-Set™ System: TE-YRT Roughening Tool: For the elements described in Sections 3.2.5.2 through 3.2.5.4 and Tables 12, 13, 16, 17, 21, and 23, the Hilti TE-YRT roughening tool with a carbide roughening head is used for hole preparation in conjunction with holes core drilled with a diamond core bit as illustrated in Figure 4.

3.2.4 Dispensers: Hilti HIT-HY 200 must be dispensed with manual or electric dispensers provided by Hilti.

3.2.5 Anchor Elements:

3.2.5.1 Hilti HIT-Z and HIT-Z-R Anchor Rods: Hilti HIT-Z and HIT-Z-R anchor rods have a conical shape on the embedded section and a threaded section above the concrete surface. Mechanical properties for the Hilti HIT-Z and HIT-Z-R anchor rods are provided in Table 2. The rods are available in diameters as shown in Table 7 and Figure 1. Hilti HIT-Z anchor rods are produced from carbon steel and furnished with a 0.005-millimeter-thick (5 μm) zinc electroplated coating. Hilti HIT-Z-R anchor rods are fabricated from grade 316 stainless steel.

3.2.5.2 Threaded Steel Rods: Threaded steel rods must be clean, continuously threaded rods (all-thread) in diameters as described in Tables 11 and 15 and Figure 1 of this report. Steel design information for common grades of threaded rods is provided in Table 3. Carbon steel threaded rods must be furnished with a 0.0002-inch-thick (0.005 mm) zinc electroplated coating complying with ASTM B633 SC 1 or must be hot-dipped galvanized complying with ASTM A153, Class C or D. Stainless steel threaded rods must comply with ASTM F593 or ISO 3506 A4. Threaded steel rods must be straight and free of indentations or other defects along their length. The ends may be stamped with identifying marks and the embedded end may be blunt cut or cut on the bias to a chisel point.

3.2.5.3 Steel Reinforcing Bars for use in Post-Installed Anchor Applications: Steel reinforcing bars are deformed bars as described in Table 4 of this report. Tables 11, 15, and 19 and Figure 1 summarize reinforcing bar size ranges. The embedded portions of reinforcing bars must be straight, and free of mill scale, rust, mud, oil and other coatings (other than zinc) that may impair the bond with the adhesive. Reinforcing bars must not be bent after installation except as set forth in ACI 318-14 26.6.3.1(b) or ACI 318-11 7.3.2, as applicable, with the additional condition that the bars must be bent cold, and heating of reinforcing bars to facilitate field bending is not permitted.

3.2.5.4 Hilti HIS-N and HIS-RN Inserts: Hilti HIS-N and HIS-RN inserts have a profile on the external surface and are internally threaded. Mechanical properties for Hilti HIS-N and HIS-RN inserts are provided in Table 5. The inserts are available in diameters and lengths as shown in Table 22 and Figure 1. Hilti HIS-N inserts are produced from carbon steel and furnished with a 0.005-millimeter-thick (5 μm) zinc electroplated coating complying with ASTM B633 SC 1. The stainless steel Hilti HIS-RN inserts are fabricated from X5CrNiMo17122 K700 steel conforming to DIN 17440. Specifications for common bolt types that may be used in conjunction with Hilti HIS-N and HIS-RN inserts are provided in Table 6. Bolt grade and material type (carbon, stainless) must be matched to the insert. Strength reduction factors, ϕ, corresponding to brittle steel elements must be used for Hilti HIS-N and HIS-RN inserts.

3.2.5.5 Ductility: In accordance with ACI 318-14 2.3 or ACI 318-11 D.1, as applicable, in order for a steel element to be considered ductile, the tested elongation must be at least 14 percent and reduction of area must be at least 30 percent. Steel elements with a tested elongation of less than 14 percent or a reduction of area of less than 30 percent, or both, are considered brittle. Values for various steel materials are provided in Tables 2, 3, and 6 of this report. Where values are nonconforming or unstated, the steel must be considered brittle.

3.2.6 Steel Reinforcing Bars for Use in Post-Installed Reinforcing Bar Connections: Steel reinforcing bars used in post-installed reinforcing bar connections are deformed bars (rebar) as depicted in Figures 2 and 3. Tables 25, 26, 27, and Figure 9 summarize reinforcing bar size ranges. The embedded portions of reinforcing bars must be straight, and free of mill scale, rust and other coatings that may impair the bond with the adhesive. Reinforcing bars must not be bent after installation, except as set forth in Section 26.6.3.1(a) of ACI 318-14 or Section 7.3.2 of ACI 318-11, as applicable, with the additional condition that the bars must be bent cold, and heating of reinforcing bars to facilitate field bending is not permitted.

3.3 Concrete:

Normal-weight concrete must comply with Sections 1903 and 1905 of the IBC, as applicable. The specified compressive strength of the concrete must be from 2,500 psi to 8,500 psi (17.2 MPa to 58.6 MPa) [minimum of 24 MPa is required under ADIBC Appendix L, Section 5.1.1].

4.0 DESIGN AND INSTALLATION

4.1 Strength Design of Post-Installed Anchors:

Refer to Table 1 for the design parameters for specific installed elements, and refer to Figure 4 and Section 4.1.4 for a flowchart to determine the applicable design bond strength or pullout strength.

4.1.1 General: The design strength of anchors under the 2018 and 2015 IBC and 2018 and 2015 IRC must be determined in accordance with ACI 318-14 and this report. The design strength of anchors under the 2012 and 2009 IBC, as well as the 2012 and 2009 IRC must be determined in accordance with ACI 318-11 and this report.

A design example according to the 2012 and 2009 IBC based on ACI 318-11 is given in Figure 7 of this report.

Design parameters are based on ACI 318-14 for use with the 2018 and 2015 IBC, and ACI 318-11 for use with the 2012 and 2009 IBC unless noted otherwise in Sections 4.1.1 through 4.1.11 of this report.

Sargent & Lundy Engineering Services, Inc.	RPP-CALC-63782, Rev. 0 **CALCULATION SHEET**		
Project No. S54413.024	**Calculation No.** S54413.024-S-004	**Rev.** 0	**Page No.** 26 of 29
Title: LERF Basin 41 Sample Port Riser Anchor Wall Design			
Prepared By: RW Davidson	**Date:** 4/5/2020	**Checked By:** PP Santos	**Date:** 4/5/2020

TABLE 1—DESIGN TABLE INDEX

Design Table		Fractional		Metric	
		Table	Page	Table	Page
Hilti HIT-Z and HIT-Z-R Anchor Rod	Steel Strength - N_{sa}, V_{sa}	7	14	7	14
	Concrete Breakout - N_{cb}, N_{cbg}, V_{cb}, V_{cbg}, V_{cp}, V_{cpg}	8	15	8	15
	Pullout Strength – N_p	10	19	10	19
Standard Threaded Rod	Steel Strength - N_{sa}, V_{sa}	11	20	15	25
	Concrete Breakout - N_{cb}, N_{cbg}, V_{cb}, V_{cbg}, V_{cp}, V_{cpg}	12	22	16	26
	Bond Strength - N_a, N_{ag}	14	24	18	28
Hilti HIS-N and HIS-RN Internally Threaded Insert	Steel Strength - N_{sa}, V_{sa}	22	32	22	32
	Concrete Breakout - N_{cb}, N_{cbg}, V_{cb}, V_{cbg}, V_{cp}, V_{cpg}	23	33	23	33
	Bond Strength - N_a, N_{ag}	24	34	24	34

Design Table		Fractional		EU Metric		Canadian	
		Table	Page	Table	Page	Table	Page
Steel Reinforcing Bars	Steel Strength - N_{sa}, V_{sa}	11A	21	15	25	19	29
	Concrete Breakout - N_{cb}, N_{cbg}, V_{cb}, V_{cbg}, V_{cp}, V_{cpg}	12	22	16	26	20	30
	Bond Strength - N_a, N_{ag}	13	23	17	27	21	31
	Determination of development length for post-installed reinforcing bar connections	25	35	26	36	27	36

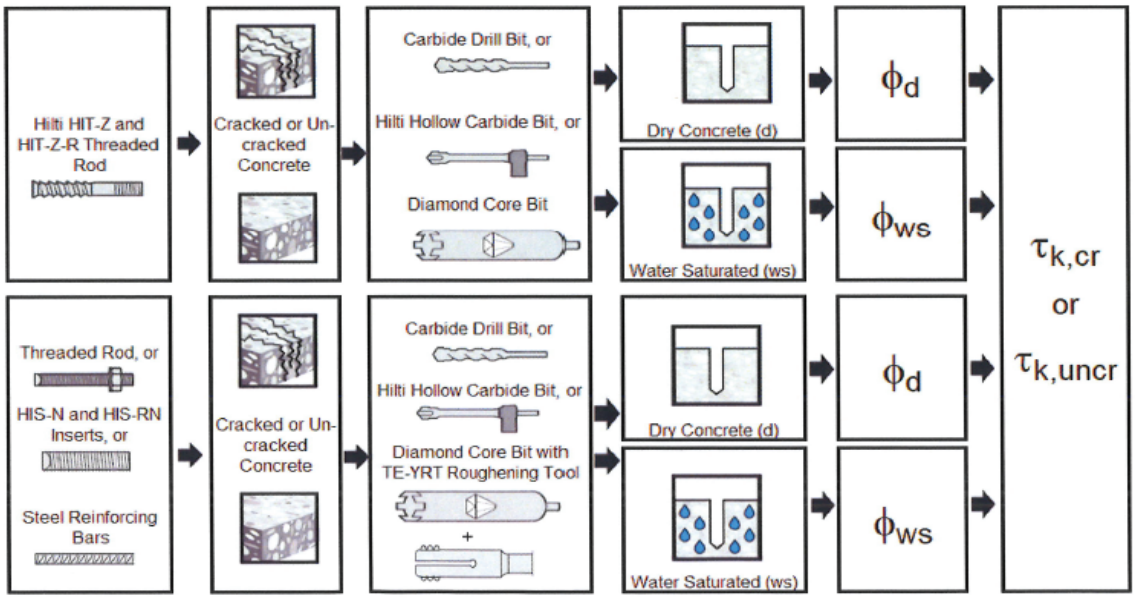

FIGURE 4—FLOWCHART FOR THE ESTABLISHMENT OF DESIGN BOND OR PULLOUT STRENGTH FOR POST-INSTALLED ADHESIVE ANCHORS

Sargent & Lundy Engineering Services, Inc.	RPP-CALC-63782, Rev. 0 **CALCULATION SHEET**		
Project No. S54413.024	**Calculation No.** S54413.024-S-004	**Rev.** 0	**Page No.** 27 of 29
Title: LERF Basin 41 Sample Port Riser Anchor Wall Design			
Prepared By: RW Davidson	**Date:** 4/5/2020	**Checked By:** PP Santos	**Date:** 4/5/2020

Fractional Threaded Rod

Steel Strength

TABLE 11—STEEL DESIGN INFORMATION FOR FRACTIONAL THREADED ROD

DESIGN INFORMATION		Symbol	Units	Nominal rod diameter (in.)[1]						
				3/8	1/2	5/8	3/4	7/8	1	1 1/4
Rod O.D.		d	in. (mm)	0.375 (9.5)	0.5 (12.7)	0.625 (15.9)	0.75 (19.1)	0.875 (22.2)	1 (25.4)	1.25 (31.8)
Rod effective cross-sectional area		A_{se}	in.^{2} (mm^2)	0.0775 (50)	0.1419 (92)	0.2260 (146)	0.3345 (216)	0.4617 (298)	0.6057 (391)	0.9691 (625)
ISO 898-1 Class 5.8	Nominal strength as governed by steel strength	N_{sa}	lb (kN)	5,620 (25.0)	10,290 (45.8)	16,385 (72.9)	24,250 (107.9)	33,470 (148.9)	43,910 (195.3)	70,260 (312.5)
		V_{sa}	lb (kN)	3,370 (15.0)	6,175 (27.5)	9,830 (43.7)	14,550 (64.7)	20,085 (89.3)	26,345 (117.2)	42,155 (187.5)
	Reduction for seismic shear	$\alpha_{V,seis}$	-	0.70						
	Strength reduction factor ϕ for tension[2]	ϕ	-	0.65						
	Strength reduction factor ϕ for shear[2]	ϕ	-	0.60						
ASTM A193 B7	Nominal strength as governed by steel strength	N_{sa}	lb (kN)	9,685 (43.1)	17,735 (78.9)	28,250 (125.7)	41,810 (186.0)	57,710 (256.7)	75,710 (336.8)	121,135 (538.8)
		V_{sa}	lb (kN)	5,810 (25.9)	10,640 (47.3)	16,950 (75.4)	25,085 (111.6)	34,625 (154.0)	45,425 (202.1)	72,680 (323.3)
	Reduction for seismic shear	$\alpha_{V,seis}$	-	0.70						
	Strength reduction factor ϕ for tension[3]	ϕ	-	0.75						
	Strength reduction factor ϕ for shear[3]	ϕ	-	0.65						
ASTM F1554 Gr. 36	Nominal strength as governed by steel strength	N_{sa}	lb (kN)	- -	8,230 (36.6)	13,110 (58.3)	19,400 (86.3)	26,780 (119.1)	35,130 (156.3)	56,210 (250.0)
		V_{sa}	lb (kN)	- -	4,940 (22.0)	7,865 (35.0)	11,640 (51.8)	16,070 (71.5)	21,080 (93.8)	33,725 (150.0)
	Reduction factor, seismic shear	$\alpha_{V,seis}$	-	0.6						
	Strength reduction factor ϕ for tension[3]	ϕ	-	0.75						
	Strength reduction factor ϕ for shear[3]	ϕ	-	0.65						
ASTM F1554 Gr. 55	Nominal strength as governed by steel strength	N_{sa}	lb (kN)	- -	10,645 (47.4)	16,950 (75.4)	25,090 (111.6)	34,630 (154.0)	45,430 (202.1)	72,685 (323.3)
		V_{sa}	lb (kN)	- -	6,385 (28.4)	10,170 (45.2)	15,055 (67.0)	20,780 (92.4)	27,260 (121.3)	43,610 (194.0)
	Reduction factor, seismic shear	$\alpha_{V,seis}$	-	0.7						
	Strength reduction factor ϕ for tension[3]	ϕ	-	0.75						
	Strength reduction factor ϕ for shear[3]	ϕ	-	0.65						
ASTM F1554 Gr. 105	Nominal strength as governed by steel strength	N_{sa}	lb (kN)	- -	17,740 (78.9)	28,250 (125.7)	41,815 (186.0)	57,715 (256.7)	75,715 (336.8)	121,135 (538.8)
		V_{sa}	lb (kN)	- -	10,645 (47.4)	16,950 (75.4)	25,090 (111.6)	34,630 (154.0)	45,430 (202.1)	72,680 (323.3)
	Reduction factor, seismic shear	$\alpha_{V,seis}$	-	0.7						
	Strength reduction factor ϕ for tension[3]	ϕ	-	0.75						
	Strength reduction factor ϕ for shear[3]	ϕ	-	0.65						
ASTM F593, CW Stainless	Nominal strength as governed by steel strength	N_{sa}	lb (kN)	7,750 (34.5)	14,190 (63.1)	22,600 (100.5)	28,435 (126.5)	39,245 (174.6)	51,485 (229.0)	- -
		V_{sa}	lb (kN)	4,650 (20.7)	8,515 (37.9)	13,560 (60.3)	17,060 (75.9)	23,545 (104.7)	30,890 (137.4)	- -
	Reduction factor, seismic shear	$\alpha_{V,seis}$	-	0.7						-
	Strength reduction factor ϕ for tension[2]	ϕ	-	0.65						-
	Strength reduction factor ϕ for shear[2]	ϕ	-	0.60						-
ASTM A193, Gr. 8(M), Class 1 Stainless	Nominal strength as governed by steel strength	N_{sa}	lb (kN)	-						55,240 (245.7)
		V_{sa}	lb (kN)	-						33,145 (147.4)
	Reduction factor, seismic shear	$\alpha_{V,seis}$	-	-						0.6
	Strength reduction factor ϕ for tension[2]	ϕ	-	-						0.75
	Strength reduction factor ϕ for shear[2]	ϕ	-	-						0.65

For **SI**: 1 inch = 25.4 mm, 1 lbf = 4.448 N. For **pound-inch** units: 1 mm = 0.03937 inches, 1 N = 0.2248 lbf

[1] Values provided for common rod material types are based on specified strengths and calculated in accordance with ACI 318-14 Eq. (17.4.1.2) and Eq (17.5.1.2b) or ACI 318-11 Eq. (D-2) and Eq. (D-29). Nuts and washers must be appropriate for the rod.

[2] For use with the load combinations of IBC Section 1605.2, ACI 318-14 5.3 or ACI 318-11 9.2, as set forth in ACI 318-14 17.3.3 or ACI 318-11 D.4.3. If the load combinations of ACI 318-11 Appendix C are used, the appropriate value of ϕ must be determined in accordance with ACI 318-11 D.4.4. Values correspond to a brittle steel element.

[3] For use with the load combinations of IBC Section 1605.2, ACI 318-14 5.3 or ACI 318-11 9.2, as set forth in ACI 318-14 17.3.3 or ACI 318-11 D.4.3. If the load combinations of ACI 318-11 Appendix C are used, the appropriate value of ϕ must be determined in accordance with ACI 318-11 D.4.4. Values correspond to a ductile steel element.

Sargent & Lundy Engineering Services, Inc.	RPP-CALC-63782, Rev. 0 **CALCULATION SHEET**		
Project No. S54413.024	**Calculation No.** S54413.024-S-004	**Rev.** 0	**Page No.** 28 of 29
Title: LERF Basin 41 Sample Port Riser Anchor Wall Design			
Prepared By: RW Davidson	**Date:** 4/5/2020	**Checked By:** PP Santos	**Date:** 4/5/2020

Fractional Threaded Rod and Reinforcing Bars

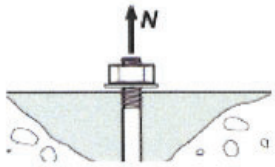

Concrete Breakout Strength

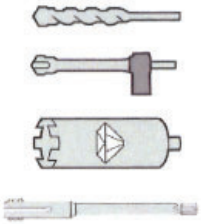

Carbide Bit or Hilti Hollow Carbide Bit or Diamond Core Bit + Roughening Tool

TABLE 12—CONCRETE BREAKOUT DESIGN INFORMATION FOR FRACTIONAL THREADED ROD AND REINFORCING BARS IN HOLES DRILLED WITH A HAMMER DRILL AND CARBIDE BIT (OR HILTI HOLLOW CARBIDE DRILL BIT) OR CORE DRILLED WITH A DIAMOND CORE BIT AND ROUGHENED WITH A HILTI ROUGHENING TOOL[1]

DESIGN INFORMATION	Symbol	Units	Nominal rod diameter (in.) / Reinforcing bar size							
			3/8 or #3	1/2 or #4	5/8 or #5	3/4 or #6	7/8 or #7	1 or #8	#9	1 1/4 or #10
Effectiveness factor for cracked concrete	$k_{c,cr}$	in-lb (SI)	17 (7.1)							
Effectiveness factor for uncracked concrete	$k_{c,uncr}$	in-lb (SI)	24 (10)							
Minimum Embedment	$h_{ef,min}$	in. (mm)	2 3/8 (60)	2 3/4 (70)	3 1/8 (79)	3 1/2 (89)	3 1/2 (89)	4 (102)	4 1/2 (114)	5 (127)
Maximum Embedment	$h_{ef,max}$	in. (mm)	7 1/2 (191)	10 (254)	12 1/2 (318)	15 (381)	17 1/2 (445)	20 (508)	22 1/2 (572)	25 (635)
Min. anchor spacing[3]	s_{min}	in. (mm)	1 7/8 (48)	2 1/2 (64)	3 1/8 (79)	3 3/4 (95)	4 3/8 (111)	5 (127)	5 5/8 (143)	6 1/4 (159)
Min. edge distance (Threaded rods)	c_{min}	in. (mm)	1¾ (45)	1¾ (45)	2 (3) (50) (3)	2 1/8 (3) (55) (3)	2¼ (3) (60) (3)	2¾ (3) (70) (3)	n/a	3 1/8 (3) (80) (3)
Min. edge distance (Reinforcing bars)[3]	c_{min}	-	5d; or see Section 4.1.9.2 of this report for design with reduced minimum edge distances							
Minimum concrete thickness	h_{min}	in. (mm)	h_{ef} + 1 1/4 (h_{ef} + 30)		$h_{ef} + 2d_0$ (4)					
Critical edge distance – splitting (for uncracked concrete)	c_{ac}	-	See Section 4.1.10.2 of this report.							
Strength reduction factor for tension, concrete failure modes, Condition B[2]	ϕ	-	0.65							
Strength reduction factor for shear, concrete failure modes, Condition B[2]	ϕ	-	0.70							

For **SI**: 1 inch ≅ 25.4 mm, 1 lbf = 4.448 N, 1 psi = 0.006897 MPa.
For pound-inch units: 1 mm = 0.03937 inches, 1 N = 0.2248 lbf, 1 MPa = 145.0 psi

[1] Additional setting information is described in Figure 9, Manufacturers Printed Installation Instructions (MPII).
[2] Values provided for post-installed anchors under Condition B without supplementary reinforcement as defined in ACI 318-14 17.3.3 or ACI 318-11 D.4.3.
[3] For installations with 1 3/4-inch edge distance, refer to Section 4.1.9.2 for spacing and maximum torque requirements.
[4] d_0 = hole diameter.

Sargent & Lundy Engineering Services, Inc.	RPP-CALC-63782, Rev. 0 **CALCULATION SHEET**		
Project No. S54413.024	**Calculation No.** S54413.024-S-004	**Rev.** 0	**Page No.** 29 of 29
Title: LERF Basin 41 Sample Port Riser Anchor Wall Design			
Prepared By: RW Davidson	**Date:** 4/5/2020	**Checked By:** PP Santos	**Date:** 4/5/2020

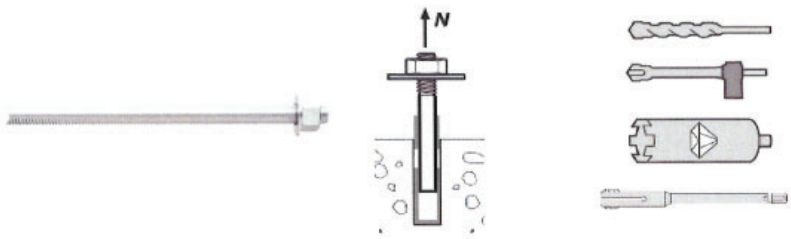

Fractional Threaded Rod | Bond Strength | Carbide Bit or Hilti Hollow Carbide Bit or Diamond Core Bit + Roughening Tool

TABLE 14—BOND STRENGTH DESIGN INFORMATION FOR FRACTIONAL THREADED ROD IN HOLES DRILLED WITH A HAMMER DRILL AND CARBIDE BIT (OR HILTI HOLLOW CARBIDE DRILL BIT) OR CORE DRILLED WITH A DIAMOND CORE BIT AND ROUGHENED WITH A HILTI ROUGHENING TOOL[1]

DESIGN INFORMATION		Symbol	Units	Nominal rod diameter (in.)						
				3/8	1/2	5/8	3/4	7/8	1	1 1/4
Minimum Embedment		$h_{ef,min}$	in. (mm)	2 3/8 (60)	2 3/4 (70)	3 1/8 (79)	3 1/2 (89)	3 1/2 (89)	4 (102)	5 (127)
Maximum Embedment		$h_{ef,max}$	in. (mm)	7 1/2 (191)	10 (254)	12 1/2 (318)	15 (381)	17 1/2 (445)	20 (508)	25 (635)
Temperature range A[2]	Characteristic bond strength in cracked concrete	$\tau_{k,cr}$	psi (MPa)	1,045 (7.2)	1,135 (7.8)	1,170 (8.1)	1,260 (8.7)	1,290 (8.9)	1,325 (9.1)	1,380 (9.5)
	Characteristic bond strength in uncracked concrete	$\tau_{k,uncr}$	psi (MPa)	2,220 (15.3)	2,220 (15.3)	2,220 (15.3)	2,220 (15.3)	2,220 (15.3)	2,220 (15.3)	2,220 (15.3)
Temperature range B[2]	Characteristic bond strength in cracked concrete	$\tau_{k,cr}$	psi (MPa)	1,045 (7.2)	1,135 (7.8)	1,170 (8.1)	1,260 (8.7)	1,290 (8.9)	1,325 (9.1)	1,380 (9.5)
	Characteristic bond strength in uncracked concrete	$\tau_{k,uncr}$	psi (MPa)	2,220 (15.3)	2,220 (15.3)	2,220 (15.3)	2,220 (15.3)	2,220 (15.3)	2,220 (15.3)	2,220 (15.3)
Temperature range C[2]	Characteristic bond strength in cracked concrete	$\tau_{k,cr}$	psi (MPa)	855 (5.9)	930 (6.4)	960 (6.6)	1,035 (7.1)	1,055 (7.3)	1,085 (7.5)	1,130 (7.8)
	Characteristic bond strength in uncracked concrete	$\tau_{k,uncr}$	psi (MPa)	1,820 (12.6)	1,820 (12.6)	1,820 (12.6)	1,820 (12.6)	1,820 (12.6)	1,820 (12.6)	1,820 (12.6)
Permissible installation conditions	Dry and water saturated concrete	Anchor Category	-	1						
		ϕ_d, ϕ_{ws}	-	0.65						
Reduction for seismic tension	Hammer drilled	$\alpha_{N,seis}$	-	0.88	0.99	0.99	1.0	1.0	0.95	0.99
	Core drilled + roughening	$\alpha_{N,seis}$	-	N/A		0.88	0.96	0.96	1.0	0.82

For **SI**: 1 inch ≡ 25.4 mm, 1 lbf = 4.448 N, 1 psi = 0.006897 MPa.
For pound-inch units: 1 mm = 0.03937 inches, 1 N = 0.2248 lbf, 1 MPa = 145.0 psi

[1] Bond strength values correspond to concrete compressive strength f'_c = 2,500 psi (17.2 MPa). For concrete compressive strength, f'_c, between 2,500 psi (17.2 MPa) and 8,000 psi (55.2 MPa) [minimum of 24 MPa is required under ADIBC Appendix L, Section 5.1.1], the tabulated characteristic bond strength may be increased by a factor of $(f'_c / 2{,}500)^{0.1}$ [For SI: $(f'_c / 17.2)^{0.1}$]. See Section 4.1.4 of this report for bond strength determination.
[2] Temperature range A: Maximum short term temperature = 130°F (55°C), Maximum long term temperature = 110°F (43°C).
Temperature range B: Maximum short term temperature = 176°F (80°C), Maximum long term temperature = 110°F (43°C).
Temperature range C: Maximum short term temperature = 248°F (120°C), Maximum long term temperature = 162°F (72°C).
Short term elevated concrete temperatures are those that occur over brief intervals, e.g., as a result of diurnal cycling. Long term concrete temperatures are roughly constant over significant periods of time.

ENGINEERING CHANGE NOTICE

Prepared For the U.S. Department of Energy, Assistant Secretary for Environmental Management
By Washington River Protection Solutions, LLC., PO Box 850, Richland, WA 99352
Contractor For U.S. Department of Energy, Office of River Protection, under Contract DE-AC27-08RV14800

TRADEMARK DISCLAIMER: Reference herein to any specific commercial product, process, or service by trade name, trademark, manufacturer, or otherwise, does not necessarily constitute or imply its endorsement, recommendation, or favoring by the United States government or any agency thereof or its contractors or subcontractors. Printed in the United States of America.

Release Stamp

DATE: May 27,2020 HANFORD RELEASE

1a. **ECN No:** ECN-715507 **Rev.** 00	1b. **Project Number:** T1P226 ☐N/A
2. **Title:** LERF Basin 41 Installation - Mechanical	
3. **WA or Redline ECN:** ☐ WA ☐ REDLINE ☒ N/A	4. **Temporary Modification:** ☐ Yes ☒ No
5. **Design Type:** II	6. **Design Verification Required:** ☐Yes ☒No
7. **Safety Classification:** ☐SC ☐SS ☒GS ☐N/A	
8. **USQ Number:** ☒ N/A RPP-27195	9. **PrHA Number** **Rev.** ☒ N/A

Workflow Approval Status: For Approval
Clearance Review Restriction Type: undefined

10. **Trend Codes**

Cause	Commodity	Discipline Driver
Initial Design Release	Mechanical Equipment	Mechanical

11. **Design Authority Designator**

PRJ - LERF BASIN 41

12. **Approvals**

Title	Name	Signature	Date
Design Authority	Wilson, Nathaniel W	*Wilson, Nathaniel W*	04/14/2020
Checker	Dorsh, Paul M	*Dorsh, Paul M*	03/18/2020
Document Control Approval	Meinecke, Kathryn R	*Meinecke, Kathryn R*	05/27/2020
Environmental Protection	Wall, Jeremy M	*Wall, Jeremy M*	02/28/2020
Originator	Hall, Richard B	*Hall, Richard B*	03/18/2020
Other Approver	Greenhalgh, Aaron M	*Greenhalgh, Aaron M*	04/13/2020
Responsible Engineering Manager	Huntington, Matthew R	*Huntington, Matthew R*	04/15/2020

13. **Problem**

LERF currently consists of three main retention basins. The future mission of various Hanford clean-up projects requires additional volume capacity from LERF for liquid retention. Consequently, LERF cannot handle the increased liquid volume as currently designed and is undersized.

14. **Solution**

Design and install a new LERF liquid retention basin. The new basin (Basin 242AL-41, Basin 41) will reside in the space previously excavated west of Basin 242AL-42 (Basin 42). Install the new basin utilizing T1P226 project drawings as referenced within H-2-838745 drawing list. The installation shall adhere to construction specification RPP-SPEC-63632.

As the project drawings indicate Basin 41 will be installed. The Basin 41 design will include excavation details to achieve the proper profile with a soil/bentonite layer. The basin's bottom liner is installed followed by the basin's top liner with the top cover as the final layer. The catch basin will be located in the northwest corner as typical with other basins. Mechanical risers extending into the primary basin and the leachate system will be installed from the catch basin while the smaller sample risers are located around the basin perimeter.

15. **Analysis**

Project calculations validate the new Basin 41 design, see H-2-838745 for reference. The scope of this ECN is to install the basin, the liners, the catch basin and mechanical equipment depicted within the Block 14 Solution. ECN-715508 will perform the mechanical piping connection of the 4"-WTP-001-M17 and 3"-EVAP COND-PC5000-M17 transfer lines. ECN-715509 will install and perform the mechanical piping connection of the new transfer lines to Basin 42 Catch Basin.

Design checks were performed in accordance with ARES ESD (Sargent & Lundy) Quality Assurance Procedure (QAP) 3.2 and 3.6.

16. **Description of Change**

H-2-79582 Sheet 1:
-Update drawing to depict the installation of 242AL-41 basin and catch basin. Add a reference to point to project drawing list, H-2-838745.

H-2-79583 Sheet 1:
-Update drawing to depict the installation of 242AL-41 basin and catch basin. Add a reference to point to project drawing list, H-2-838745.

H-2-79583 Sheet 2:
-Update drawing to depict the installation of 242AL-41 basin and catch basin. Add a reference to point to project drawing list, H-2-838745.

H-2-79586 Sheet 1:
-Update drawing to depict the installation of 242AL-41 basin and catch basin. Add a reference to point to project drawing list, H-2-838745.

H-2-79604 Sheet 1:
-Update drawing to depict the installation of 242AL-41 basin.

H-2-79610 Sheet 1:

RICHARD B. HALL STATE OF WASHINGTON 55535 REGISTERED PROFESSIONAL ENGINEER 5/27/2020

ENGINEERING CHANGE NOTICE

ECN No: ECN-715507 **Rev.** 00

16. **Description of Change**

-Update drawing to depict the installation of 242AL-41 basin and catch basin. Add a reference to point to project drawing list, H-2-838745, and the catch basin design, H-2-838766. Update a drawing error pertaining to the PC5000 transfer line.

H-2-830097 Sheet 1:
-Update drawing to depict the installation of 242AL-41 basin and catch basin. Add a reference to point to project drawing list, H-2-838745.

H-2-830098 Sheet 1:
-Update drawing to depict the installation of 242AL-41 basin and catch basin. Add a reference to point to the appropriate project drawings. Update labels throughout drawing to remove "new" in multiple locations as the referenced piping is now installed and existing.

17. **Work Package Number(s)**

TBD

18. **TBDs or Holds** ☒N/A

19. **Related Structures, Systems, and Components**

a. **Related Building/Facilities** ☐N/A	b. **Related Systems** ☐N/A	c. **Related Equipment ID Nos. (EIN)** ☒N/A
LERF FACILITIES	LERF	

20. **Engineering Drawings to be Changed** Does change affect the Electronic Routing Board? ☐

Drawing Number	Rev.	Title
H-2-79582 SH 001	01	CIVIL LOCATION PLAN
H-2-79583 SH 001	01	CIVIL SITE PREPARATION EXCAVATION PLAN & DETAILS
H-2-79583 SH 002	01	CIVIL SITE PREPARATION FILL PLAN & DET
H-2-79586 SH 001	02	CIVIL SITE PLAN & FENCE DET
H-2-79604 SH 001	03	PIPING PLOT & KEY PLANS 242-A EVAP COND STREAM
H-2-79610 SH 001	03	PIPING PLAN RETENTION BASINS
H-2-830097 SH 001	01	W-519 SITE/UTILITY SYSTEMS PLAN AND PROFILE STA 2+000 TO STA 2+333.0
H-2-830098 SH 001	01	W-519 SITE/UTILITY SYSTEMS PLAN & PROFILE LERF BASINS

21. **Related Modification Traveler** ☐N/A

MT-50497

22. **Related Documents** ☐N/A

Document Number	Rev.	Title
DCN-715392	00	Delete Basin 41 from Drawings
ECN-715508	00	LERF Basin 41 Existing Piping Connections - Mechanical
ECN-715509	00	LERF Basin 41 New Piping Connections - Mechanical
H-2-838745 SH 001	00	LERF BASIN 41 DRAWING LIST / TITLE SHEET
H-2-838766 SH 001	00	LERF BASIN 41 BASIN 41 GENERAL ARRANGEMENT
H-2-88766 SH 006	00	P&ID LERF BASIN & ETF INFLUENT EVAPORATOR
RPP-SPEC-63632	00	LERF Basin 41 Construction Specification

23. **Distribution**

Name	Organization
Angevine, Brennan T	MISSION ANALYSIS ENGINEERING
Blaak, Whitney S	COGNIZANT SYSTEM ENGINEERING
Demiter, Scott M	ETF OPERATIONS
Foster, Jim	242-A/AW/ETF OPERATIONS
Goessmann, Glen E	ENGINEERING PROGRAMS
Greenhalgh, Aaron M	TANK FARM PROJECTS ENGINEERING
Harris, John W	SAFETY PROGRAM SERVICES RC/P
Joslyn, Cameron C	ETF ENGINEERING
McFerran, Brandon E	242-A/AW/ETF OPERATIONS
McShane, Michael P	ENGINEERING PROGRAMS
Omberg Carro, Susan K	NUCLEAR SAFETY
Powers, Daniel J	ETF ENGINEERING
Roosendaal, Gene D	TFP PROJECT MANAGEMENT
Rutherford, Wally	ETF ENGINEERING
Sackett, Tom E	TANK FARM PROJECTS
Samoska, Jerry A	INSTRUMENT & CNTRL ENGINEERING
Shultz, Milton V	NUCLEAR SAFETY
Smith, Gregory E	TANK FARM PROJECTS ENGINEERING
Smoot, Bill R	TFP RADCON
Stamper, Lavonne J	ETF ENGINEERING
Swanson, Brad L	242-A/AW/ETF OPERATIONS
Wall, Jeremy M	RETRVL & CLOSURE/PROJ ENV CMPL
Wilson, Nathaniel W	ETF PROJECTS ENGINEERING

ENGINEERING CHANGE NOTICE	**ECN No:** ECN-715507 **Rev.** 00

ENGINEERING CHANGE NOTICE CONTINUATION SHEET	ECN NO.: 715507

Document/Drawing No. H-2-79582 Sheet 1 Revision 1

CONSTRUCTION NOTE: (DO NOT INCORPORATE)

THIS "WAS" CONDITION REFLECTS THE "IS" CONDITION OF DCN-715392.

WAS:

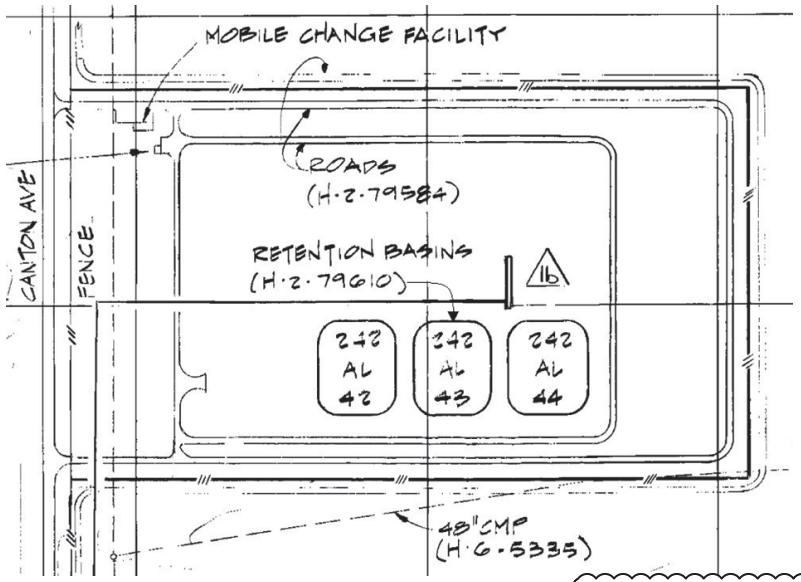

IS:

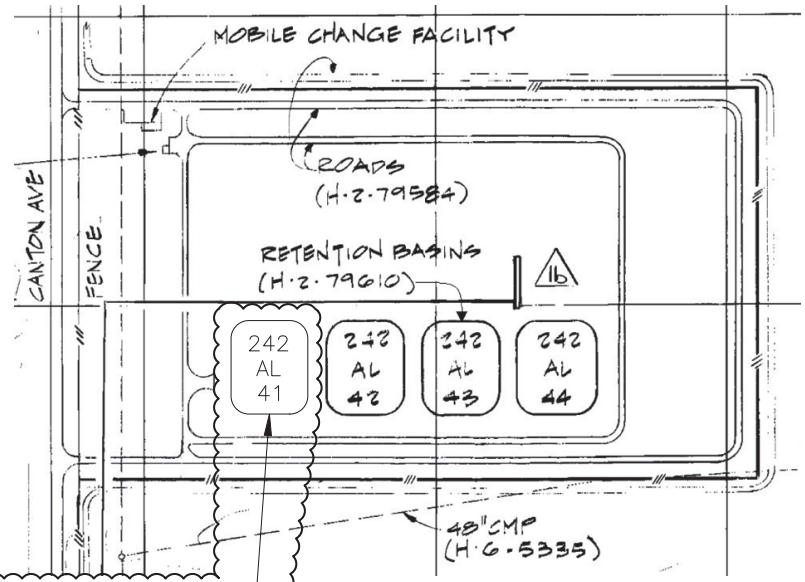

FOR PROJECT T1P226 DESIGN AND INSTALLATION OF BASIN 242AL-41, SEE PROJECT DRAWING LIST H-2-838745

ENGINEERING CHANGE NOTICE CONTINUATION SHEET	ECN NO.: 715507

Document/Drawing No. H-2-79583 Sheet 1 Revision 1

CONSTRUCTION NOTE: (DO NOT INCORPORATE)

THIS "WAS" CONDITION REFLECTS THE "IS" CONDITION OF DCN-715392.

WAS:

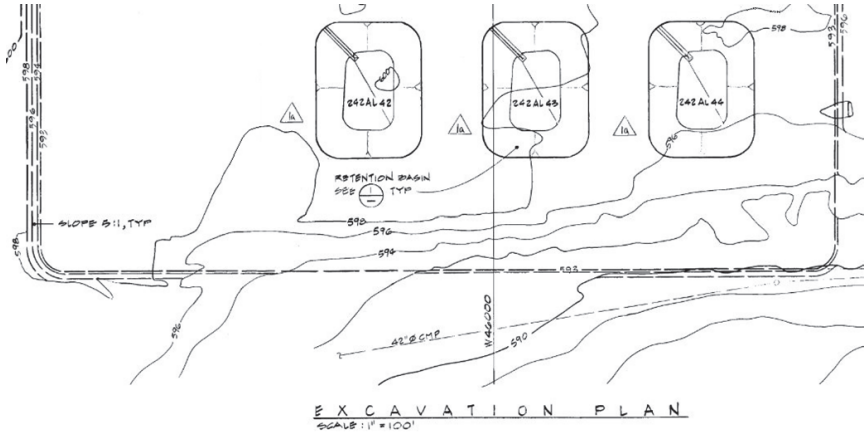

EXCAVATION PLAN
SCALE: 1" = 100'

IS:

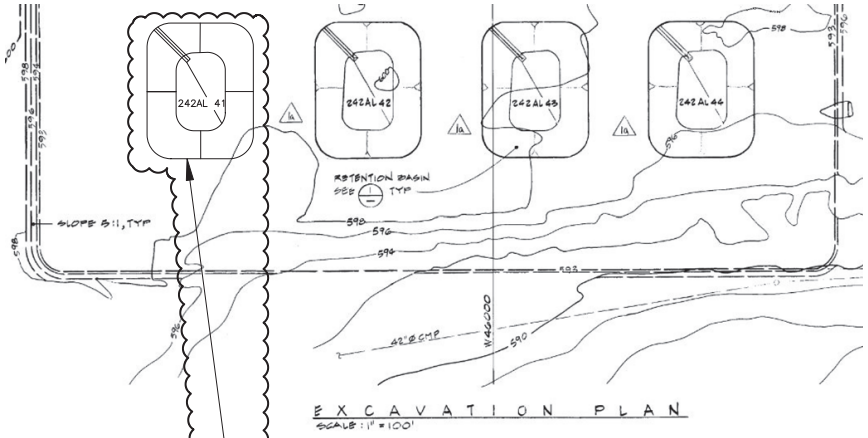

EXCAVATION PLAN
SCALE: 1" = 100'

FOR PROJECT T1P226 DESIGN AND INSTALLATION OF BASIN 242AL-41, SEE PROJECT DRAWING LIST H-2-838745

ENGINEERING CHANGE NOTICE CONTINUATION SHEET	ECN NO.: 715507

Document/Drawing No. H-2-79583 Sheet 2 Revision 1

CONSTRUCTION NOTE: (DO NOT INCORPORATE)

THIS "WAS" CONDITION REFLECTS THE "IS" CONDITION OF DCN-715392.

WAS:

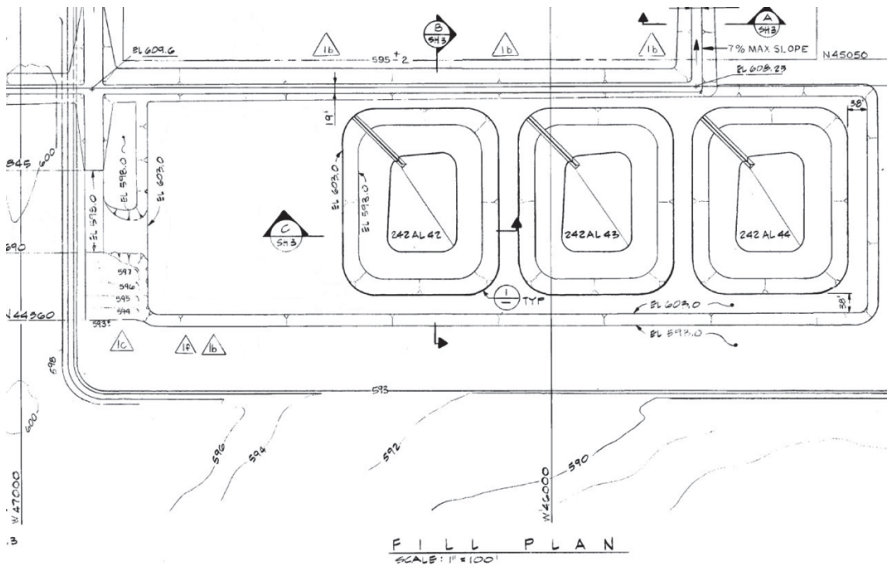

IS:

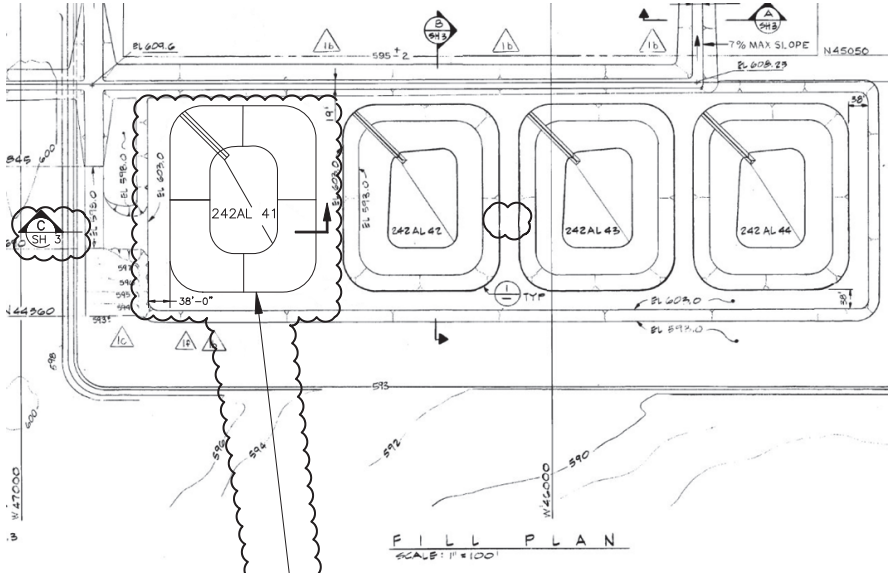

FOR PROJECT T1P226 DESIGN AND INSTALLATION OF BASIN 242AL-41, SEE PROJECT DRAWING LIST H-2-838745

ENGINEERING CHANGE NOTICE CONTINUATION SHEET	ECN NO.: 715507

Document/Drawing No. H-2-79586 Sheet 1 Revision 2

CONSTRUCTION NOTE: (DO NOT INCORPORATE)

THIS "WAS" CONDITION REFLECTS THE "IS" CONDITION OF DCN-715392.

WAS:

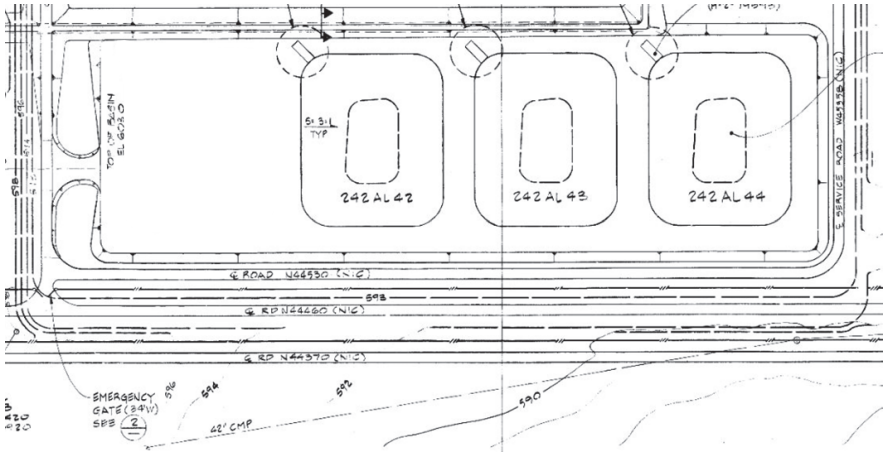

IS:

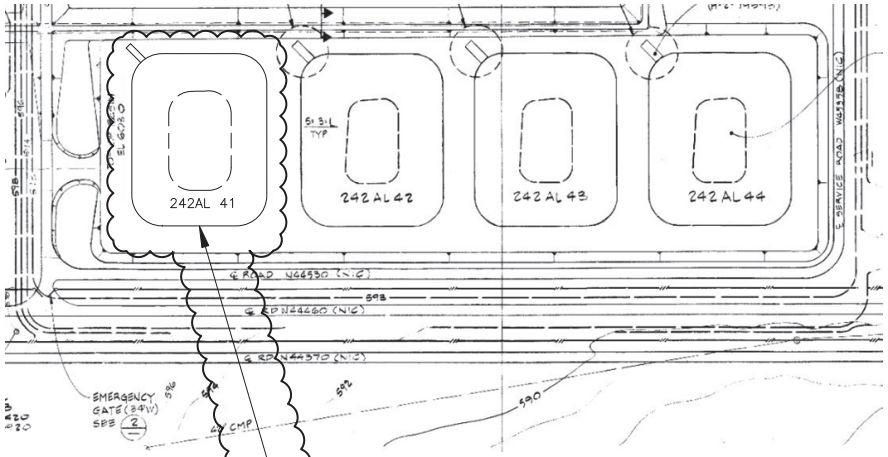

FOR PROJECT T1P226 DESIGN AND INSTALLATION OF BASIN 242AL-41, SEE PROJECT DRAWING LIST H-2-838745

ENGINEERING CHANGE NOTICE CONTINUATION SHEET	ECN NO.: 715507

Document/Drawing No. H-2-79604 Sheet 1 Revision 3

WAS:

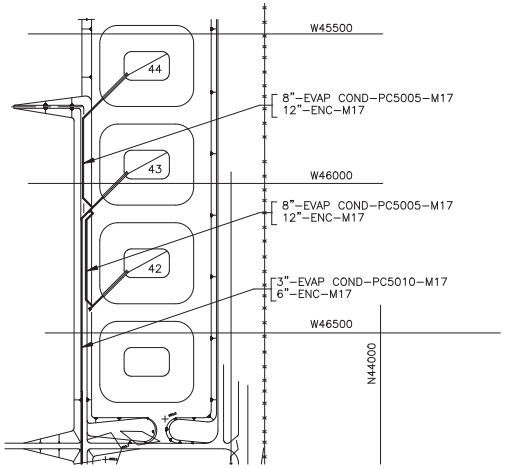

IS:

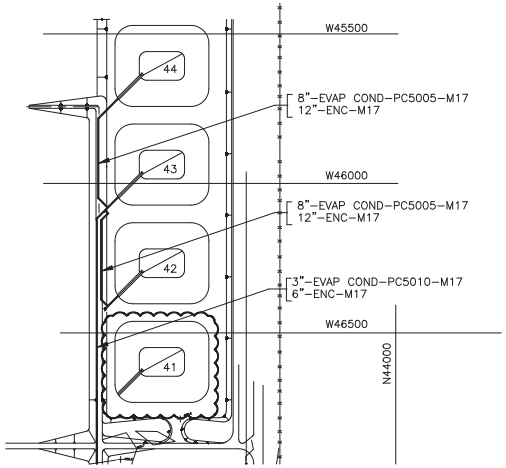

CONSTRUCTION NOTE: (DO NOT INCORPORATE)

THIS "WAS" CONDITION REFLECTS THE "IS" CONDITION OF DCN-715392.

ENGINEERING CHANGE NOTICE CONTINUATION SHEET	ECN NO.: 715507

Document/Drawing No. H-2-79610 Sheet 1 Revision 3

WAS:

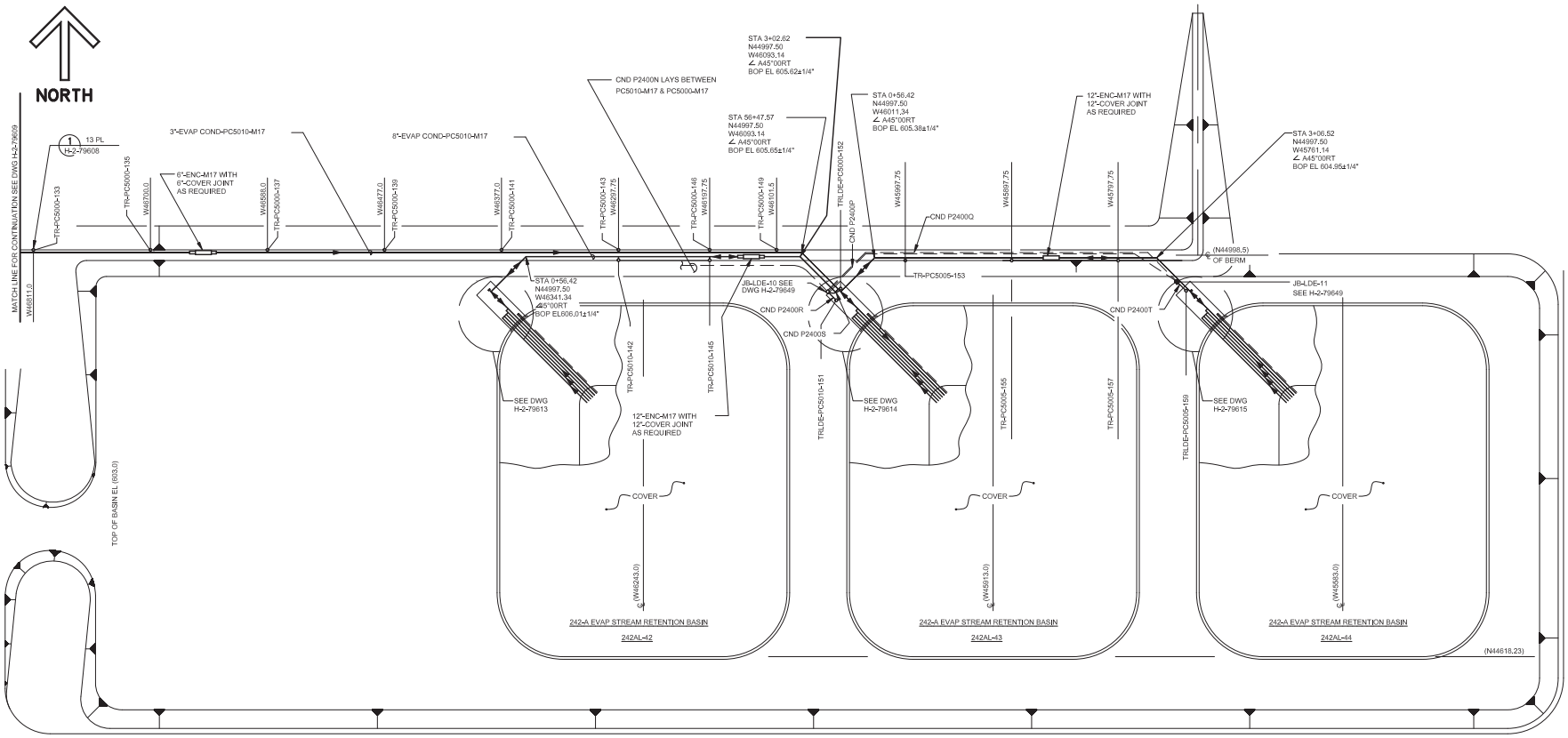

PLAN
SCALE: 1"=40'-0"

NOTE:

1. FOR GENERAL NOTES SEE DWG H-2-79605

ENGINEERING CHANGE NOTICE CONTINUATION SHEET	ECN NO.: 715507

Document/Drawing No. H-2-79610 Sheet 1 Revision 3

IS:

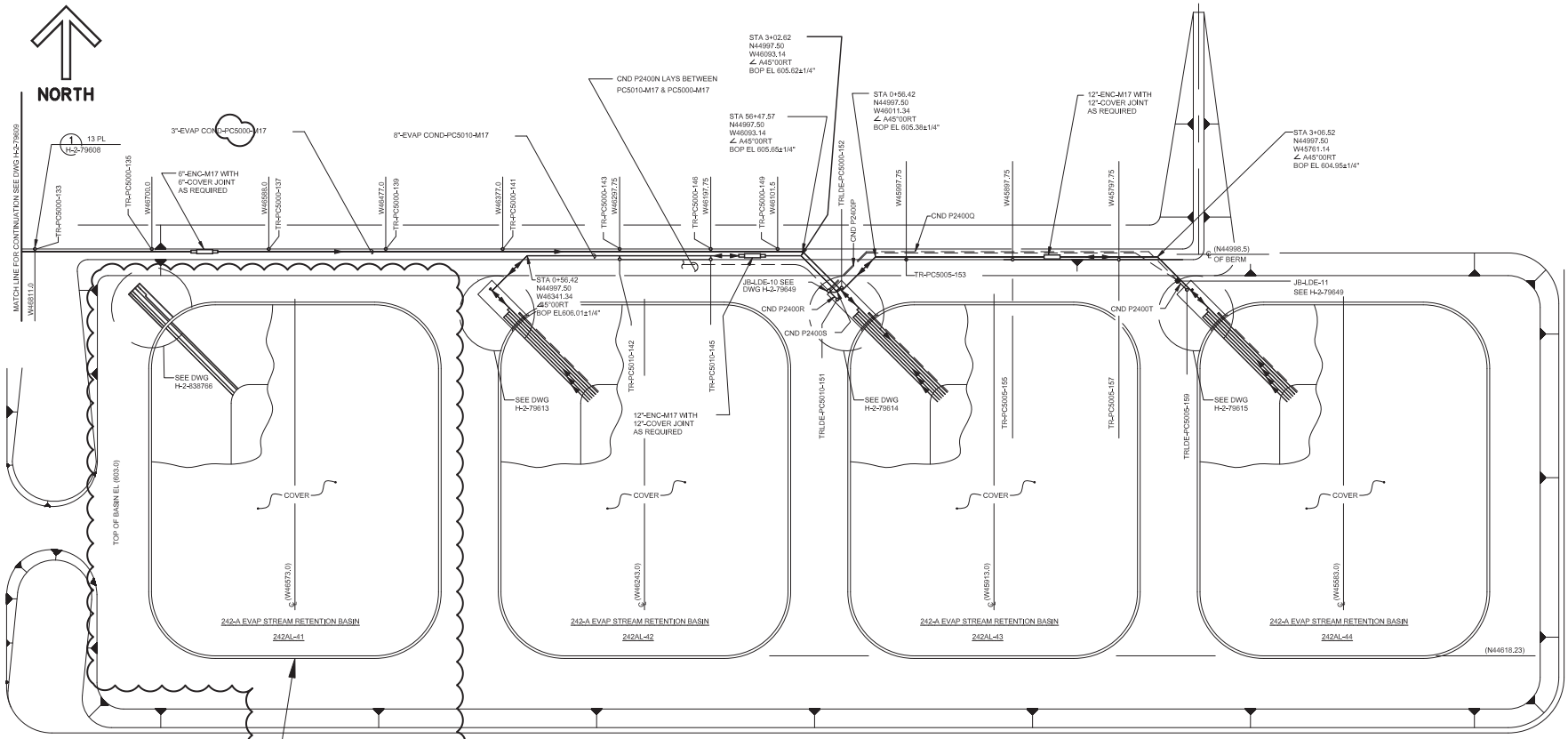

FOR PROJECT T1P226 DESIGN AND
INSTALLATION OF BASIN 242AL-41,
SEE PROJECT DRAWING LIST H-2-838745

PLAN
SCALE: 1"=40'-0"

NOTE:

1. FOR GENERAL NOTES SEE DWG H-2-79605

ENGINEERING CHANGE NOTICE CONTINUATION SHEET	ECN NO.: 715507

Document/Drawing No. H-2-830097 Sheet 1 Revision 1

WAS:

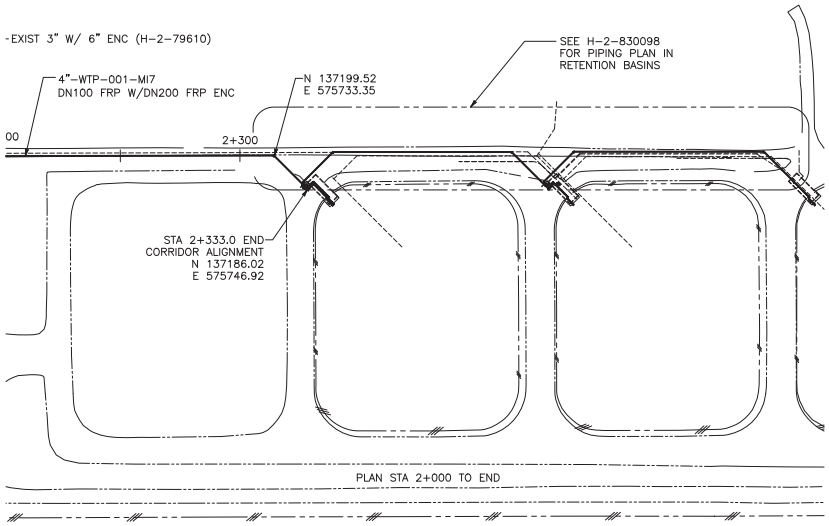

IS:

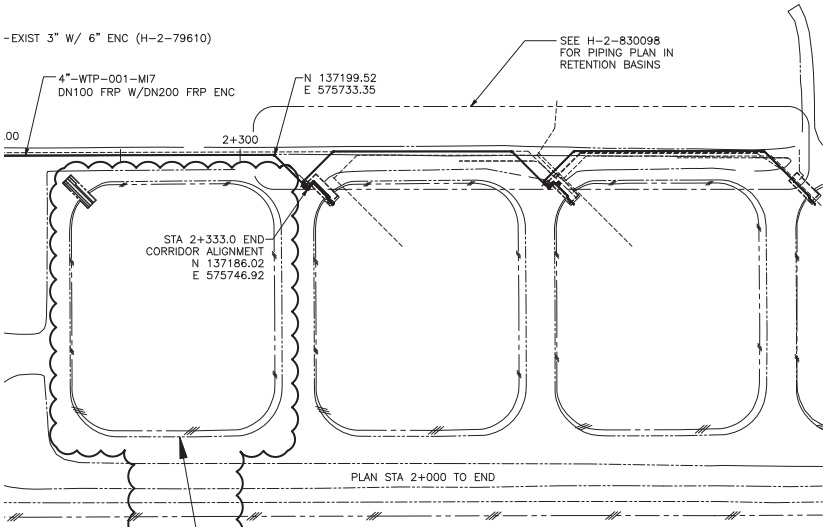

FOR PROJECT T1P226 DESIGN AND INSTALLATION OF BASIN 242AL-41, SEE PROJECT DRAWING LIST H-2-838745

ENGINEERING CHANGE NOTICE CONTINUATION SHEET	ECN NO.: 715507

Document/Drawing No. H-2-830098 Sheet 1 Revision 1

WAS:

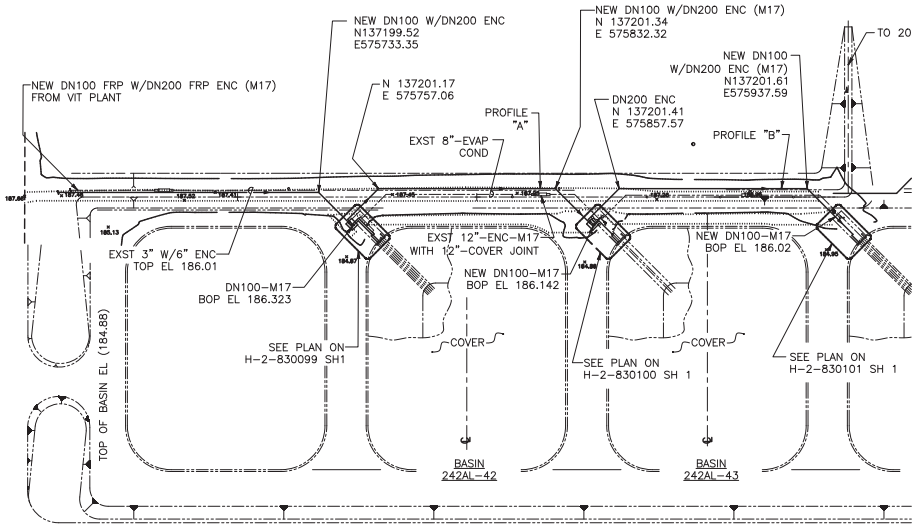

IS:

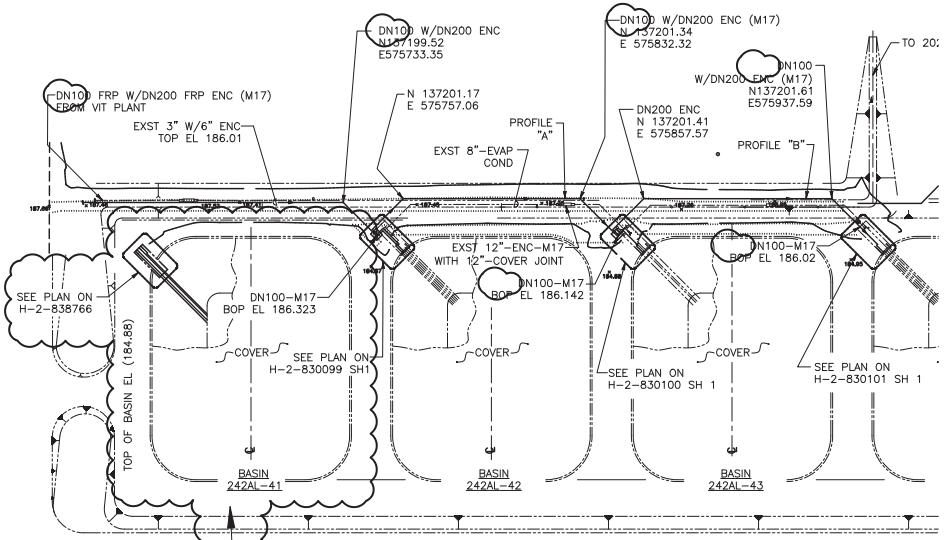

FOR PROJECT T1P226 DESIGN AND INSTALLATION OF BASIN 242AL-41, SEE PROJECT DRAWING LIST H-2-838745

ENGINEERING CHANGE NOTICE

Prepared For the U.S. Department of Energy, Assistant Secretary for Environmental Management
By Washington River Protection Solutions, LLC., PO Box 850, Richland, WA 99352
Contractor For U.S. Department of Energy, Office of River Protection, under Contract DE-AC27-08RV14800

TRADEMARK DISCLAIMER: Reference herein to any specific commercial product, process, or service by trade name, trademark, manufacturer, or otherwise, does not necessarily constitute or imply its endorsement, recommendation, or favoring by the United States government or any agency thereof or its contractors or subcontractors. Printed in the United States of America.

Release Stamp

DATE: May 27,2020

HANFORD RELEASE

1a. **ECN No:** ECN-715508 **Rev.** 00	1b. **Project Number:** T1P226 ☐N/A
2. **Title:** LERF Basin 41 Existing Piping Connections - Mechanical	
3. **WA or Redline ECN:** ☐ WA ☐ REDLINE ☒ N/A	4. **Temporary Modification:** ☐ Yes ☒ No
5. **Design Type:** II	6. **Design Verification Required:** ☐Yes ☒No
7. **Safety Classification:** ☐SC ☐SS ☒GS ☐N/A	
8. **USQ Number:** ☒ N/A RPP-27195	9. **PrHA Number** **Rev.** ☒ N/A

Workflow Approval Status: For Approval
Clearance Review Restriction Type: undefined

10. **Trend Codes**

Cause	Commodity	Discipline Driver
Initial Design Release	Piping, Tubing	Mechanical

11. **Design Authority Designator**

PRJ - LERF BASIN 41

12. **Approvals**

Title	Name	Signature	Date
Design Authority	Wilson, Nathaniel W	*Wilson, Nathaniel W*	04/21/2020
Checker	Dorsh, Paul M	*Dorsh, Paul M*	03/18/2020
Document Control Approval	Alvarez, Efren	*Alvarez, Efren*	05/27/2020
Environmental Protection	Wall, Jeremy M	*Wall, Jeremy M*	04/30/2020
Originator	Hall, Richard B	*Hall, Richard B*	03/18/2020
Other Approver	Joslyn, Cameron C	*Joslyn, Cameron C*	05/07/2020
Responsible Engineering Manager	Huntington, Matthew R	*Huntington, Matthew R*	05/07/2020

13. **Problem**

The new LERF Basin 41, associated catch basin, and ancillary equipment was installed by ECN-715507. The 242-A Process Condensate and the EMF Effluent lines do not route to the new basin. Without a direct route for these two process lines to drain into Basin 41 the future liquid volume sent to LERF will overwhelm the other LERF basins.

14. **Solution**

Install a tie-in point within the existing 242-A Process Condensate (3"-EVAP COND-PC5000-M17) and EMF Effluent (4"-WTP-001-M17) lines and route new pipe to Basin 41. Install the new tie-in point in each transfer line utilizing an FRP carrier pipe and encasement pipe as identified on the design media, reference H-2-838765. Excavate into the south LERF transfer line berm to access the transfer line tie-in points as shown on the project design media. Cut and install the transfer line tie-in connections as described in the construction specification RPP-SPEC-63632 and the manufacturer's recommendations. Install the new transfer lines 4"-60M-008-M18 and 3"-60M-009-M18 up to the appropriate connection in Basin 41 with the proper piping insulation, heat trace, and pipe supports. Coordinate backfill of the transfer line berm with the installation of new transfer lines in ECN-715509.

15. **Analysis**

Perform the tie-in point into the 3"-EVAP COND-PC5000-M17 and the 4"-WTP-001-M17 at the coordinate location identified on drawing H-2-838765. Route the new pipe lines to Catch Basin 41 for connection with the catch basin piping as detailed within the design media and installed via ECN-715507. Perform all field work in accordance with the project construction specification RPP-SPEC-63632.

Design checks were performed in accordance with ARES ESD (Sargent & Lundy) Quality Assurance Procedure (QAP) 3.2 and 3.6.

16. **Description of Change**

H-2-79604 Sheet 1:
-Update drawing to depict the installation of new line 3"-60M-009-M18.

H-2-79610 Sheet 1:
-Update drawing to depict the installation of new line 3"-60M-009-M18. The installation includes the FRP tie-in into the existing transfer lines as depicted on H-2-838765.

H-2-88766 Sheet 1:
-Update the sheet and zone reference for the 3"-EVAP COND-PC5000-M17 transfer line.

H-2-88766 Sheet 2:
-Update the sheet and zone reference for the 4"-WTP-001-M17 transfer line.

H-2-88766 Sheet 3:
-Update the sheet and zone reference for the 3"-EVAP COND-PC5000-M17 transfer line

H-2-88766 Sheet 5:
-Update the sheet and zone reference for the 4"-WTP-001-M17 transfer line.

RICHARD B. HALL
STATE OF WASHINGTON
53333
REGISTERED
PROFESSIONAL ENGINEER
5/27/2020

ENGINEERING CHANGE NOTICE

ECN No: ECN-715508 **Rev.** 00

16. **Description of Change**

H-2-830097 Sheet 1:
-Update drawing to depict the installation of new line 3"-60M-009-M18 and the new line 4"-60M-008-M18. The installation includes the FRP tie-in into the existing transfer lines as depicted on H-2-838765.

H-2-830098 Sheet 1:
-Update drawing to depict the installation of new line 3"-60M-009-M18 and the new line 4"-60M-008-M18. The installation includes the FRP tie-in into the existing transfer lines as depicted on H-2-838765.

17. **Work Package Number(s)**

TBD

18. **TBDs or Holds** ☒N/A

19. **Related Structures, Systems, and Components**

a. **Related Building/Facilities** ☐N/A	b. **Related Systems** ☐N/A	c. **Related Equipment ID Nos. (EIN)** ☐N/A
LERF FACILITIES	LERF	3"-EVAP COND-PC5000-M17 4"-WTP-001-M17

20. **Engineering Drawings to be Changed** Does change affect the Electronic Routing Board? ☐

Drawing Number	Rev.	Title
H-2-79604 SH 001	03	PIPING PLOT & KEY PLANS 242-A EVAP COND STREAM
H-2-79610 SH 001	03	PIPING PLAN RETENTION BASINS
H-2-830097 SH 001	01	W-519 SITE/UTILITY SYSTEMS PLAN AND PROFILE STA 2+000 TO STA 2+333.0
H-2-830098 SH 001	01	W-519 SITE/UTILITY SYSTEMS PLAN & PROFILE LERF BASINS
H-2-88766 SH 001	14	P & ID LERF BASIN & ETF INFLUENT EVAPORATOR
H-2-88766 SH 002	16	P&ID LERF BASIN & ETF INFLUENT EVAPORATOR
H-2-88766 SH 003	20	P&ID LERF BASIN & ETF INFLUENT EVAPORATOR
H-2-88766 SH 005	02	P & ID LERF-WTP INTERFACE

21. **Related Modification Traveler** ☐N/A

MT-50497

22. **Related Documents** ☐N/A

Document Number	Rev.	Title
ECN-715507	00	LERF Basin 41 Installation - Mechanical
ECN-715509	00	LERF Basin 41 New Piping Connections - Mechanical
H-2-838765 SH 001	00	LERF BASIN 41 MECHANICAL GENERAL ARRANGEMENT
H-2-88766 SH 006	00	P&ID LERF BASIN & ETF INFLUENT EVAPORATOR
RPP-SPEC-63632	00	LERF Basin 41 Construction Specification

23. **Distribution**

Name	Organization
Angevine, Brennan T	MISSION ANALYSIS ENGINEERING
Blaak, Whitney S	COGNIZANT SYSTEM ENGINEERING
Demiter, Scott M	ETF OPERATIONS
Foster, Jim	242-A/AW/ETF OPERATIONS
Goessmann, Glen E	ENGINEERING PROGRAMS
Greenhalgh, Aaron M	TANK FARM PROJECTS ENGINEERING
Halgren, Dale L	ETF ENGINEERING
Harris, John W	SAFETY PROGRAM SERVICES RC/P
Joslyn, Cameron C	ETF ENGINEERING
McFerran, Brandon E	242-A/AW/ETF OPERATIONS
McShane, Michael P	ENGINEERING PROGRAMS
Omberg Carro, Susan K	NUCLEAR SAFETY
Powers, Daniel J	ETF ENGINEERING
Roosendaal, Gene D	TFP PROJECT MANAGEMENT
Rutherford, Wally	ETF ENGINEERING
Sackett, Tom E	TANK FARM PROJECTS
Samoska, Jerry A	INSTRUMENT & CNTRL ENGINEERING
Shultz, Milton V	NUCLEAR SAFETY
Smith, Gregory E	TANK FARM PROJECTS ENGINEERING
Smoot, Bill R	TFP RADCON
Swanson, Brad L	242-A/AW/ETF OPERATIONS
Wall, Jeremy M	RETRVL & CLOSURE/PROJ ENV CMPL
Wilson, Nathaniel W	ETF PROJECTS ENGINEERING

ENGINEERING CHANGE NOTICE
CONTINUATION SHEET

ECN NO.: 715508

Document/Drawing No. H-2-79604 Sheet 1 Revision 3

CONSTRUCTION NOTE: (DO NOT INCORPORATE)

THIS "WAS" CONDITION REFLECTS THE "IS" CONDITION OF ECN-715507 WHEN WORK COMPLETE.

WAS:

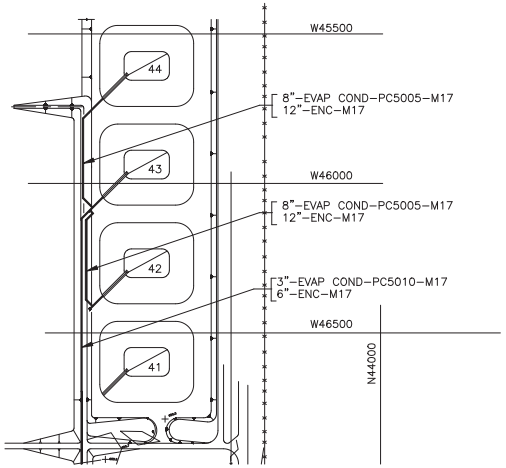

IS:

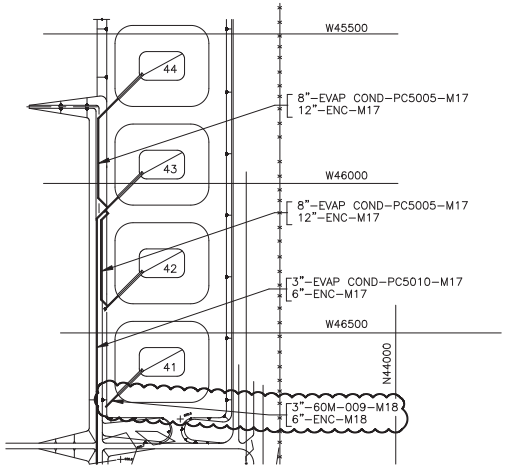

ENGINEERING CHANGE NOTICE
CONTINUATION SHEET

ECN NO.: 715508

Document/Drawing No. H-2-79610 Sheet 1 Revision 3

CONSTRUCTION NOTE: (DO NOT INCORPORATE)

THIS "WAS" CONDITION REFLECTS THE "IS" CONDITION OF ECN-715507 WHEN WORK COMPLETE.

WAS: (ZONE E/8)

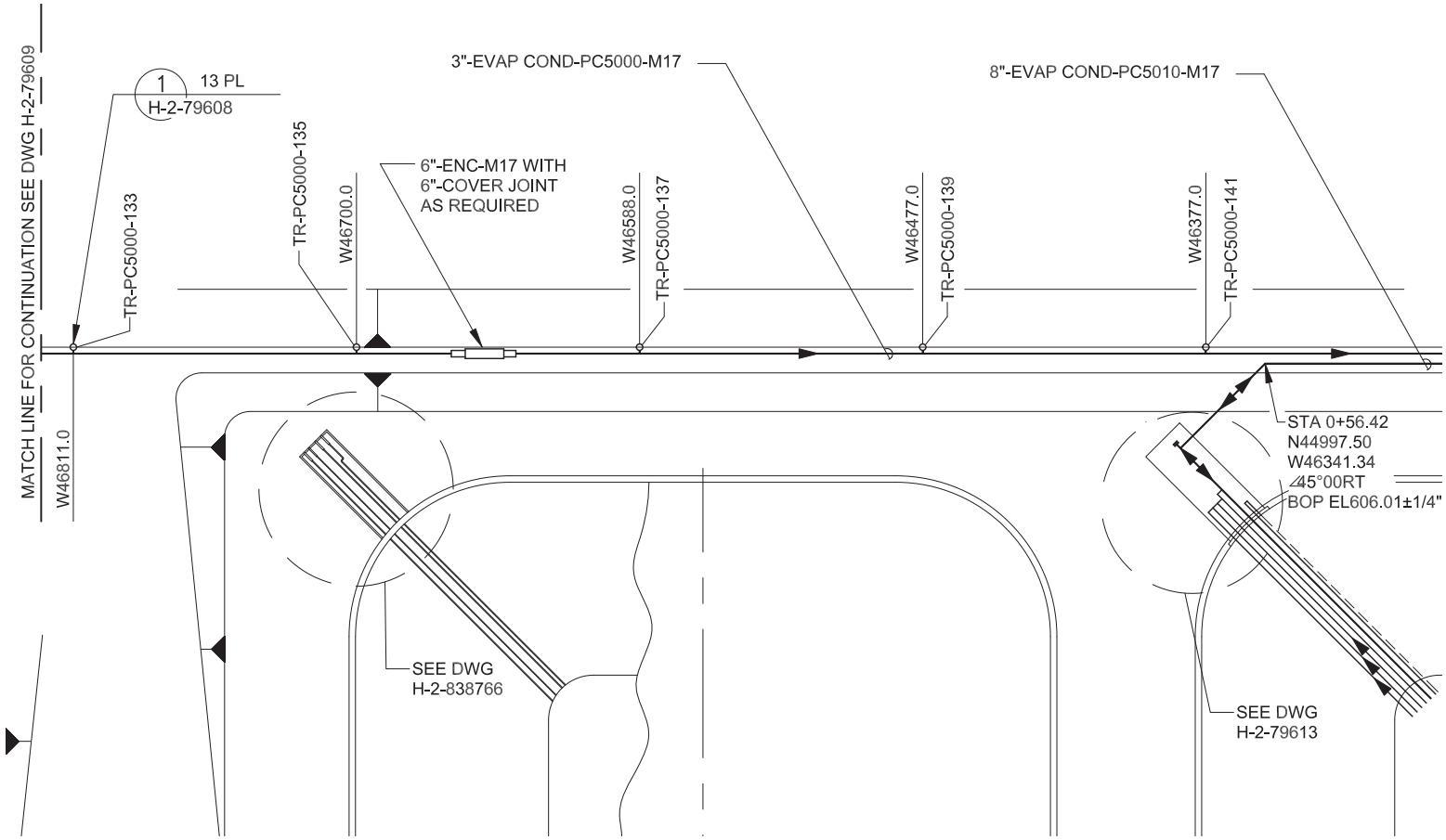

ENGINEERING CHANGE NOTICE
CONTINUATION SHEET

ECN NO.: 715508

Document/Drawing No. H-2-79610 Sheet 1 Revision 3

IS: (ZONE E/8)

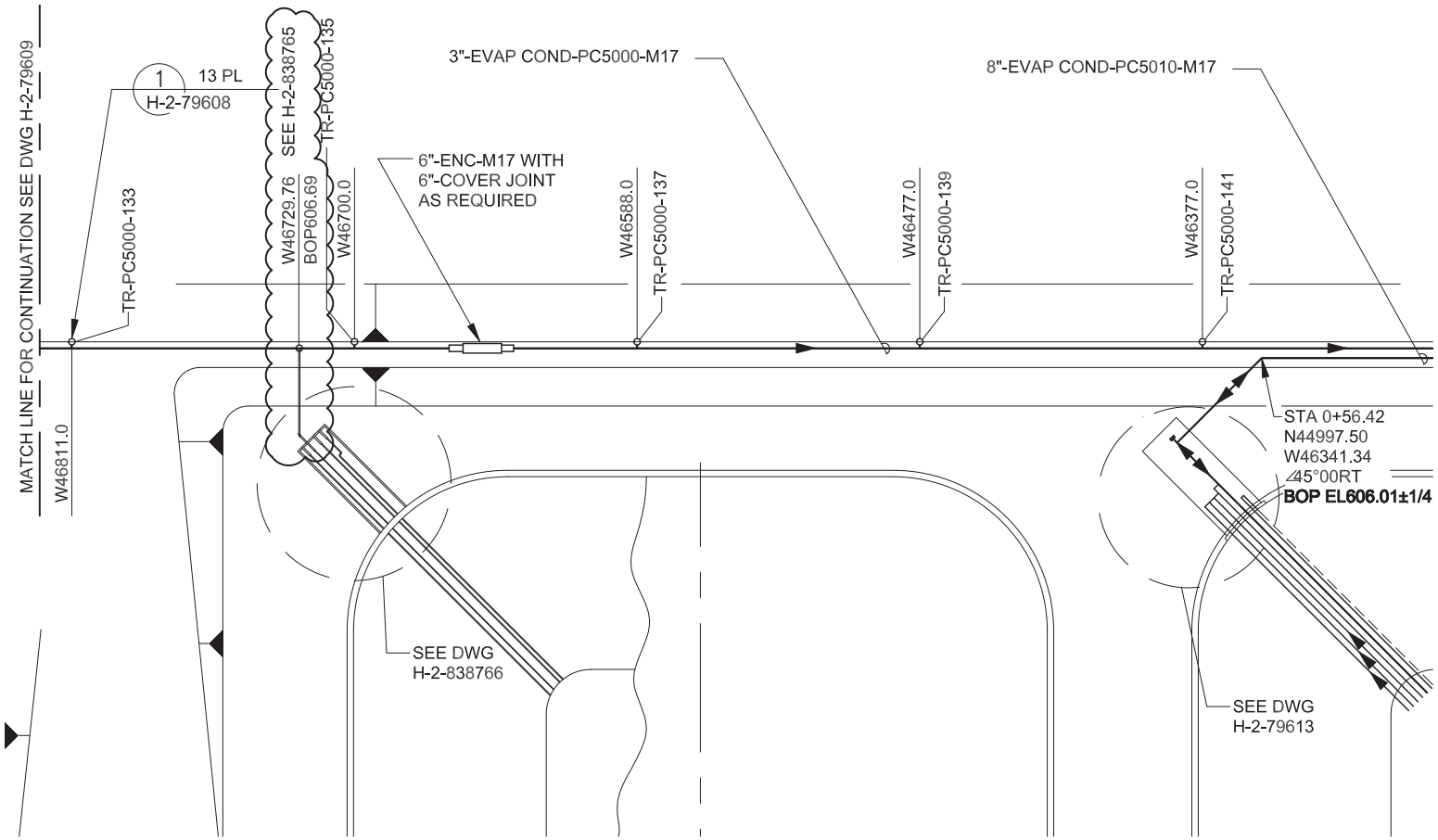

ENGINEERING CHANGE NOTICE CONTINUATION SHEET	ECN NO.: 715508

Document/Drawing No. H-2-88766 Sheet 1 Revision 14

WAS: (ZONE B/2)

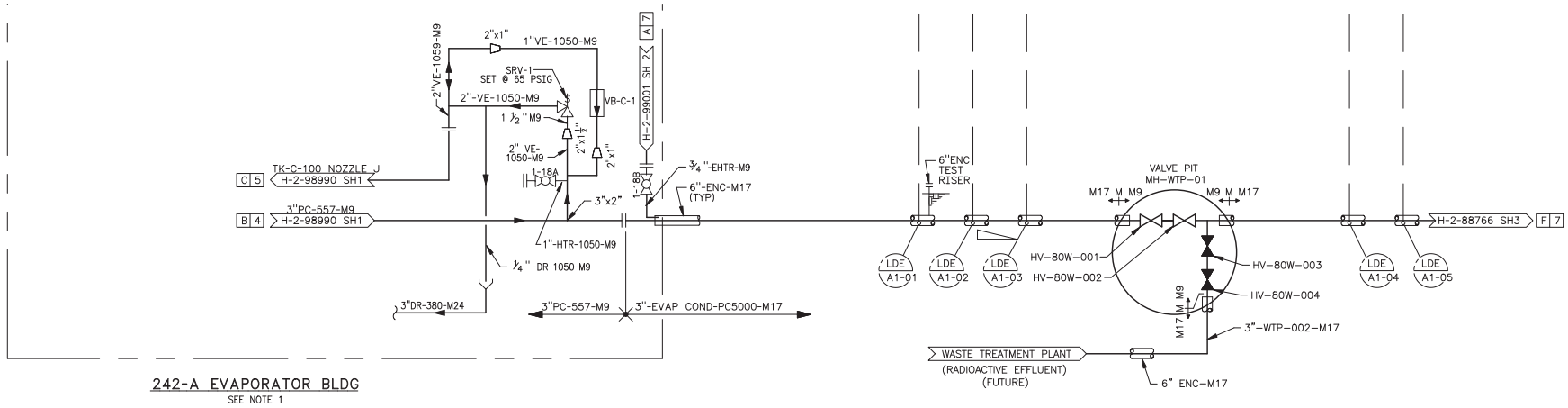

242-A EVAPORATOR BLDG
SEE NOTE 1

IS: (ZONE B/2)

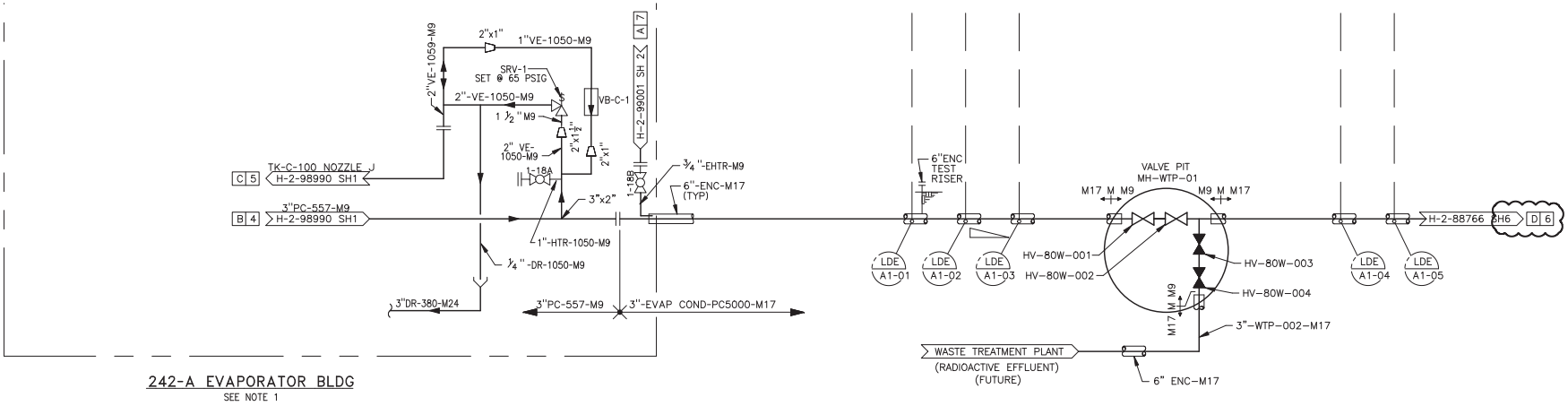

242-A EVAPORATOR BLDG
SEE NOTE 1

ENGINEERING CHANGE NOTICE CONTINUATION SHEET	ECN NO.: 715508

Document/Drawing No. H-2-88766 Sheet 2 Revision 16

WAS: (ZONE D/8)

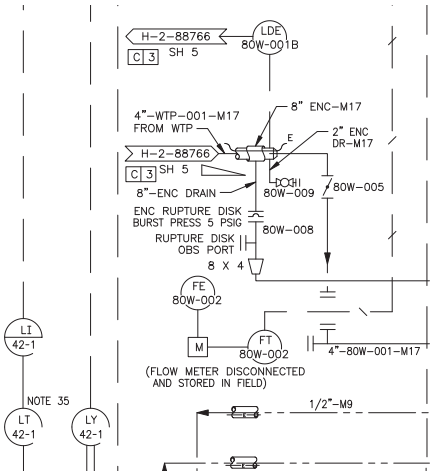

IS: (ZONE D/8)

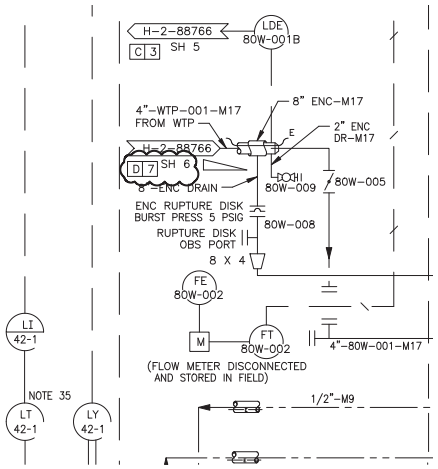

ENGINEERING CHANGE NOTICE CONTINUATION SHEET	ECN NO.: 715508

Document/Drawing No. H-2-88766 Sheet 3 Revision 20

WAS: (ZONE F/7)

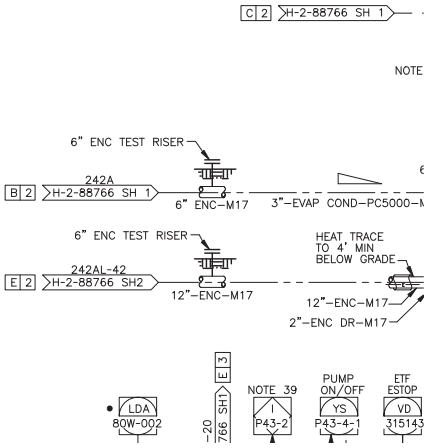

IS: (ZONE F/7)

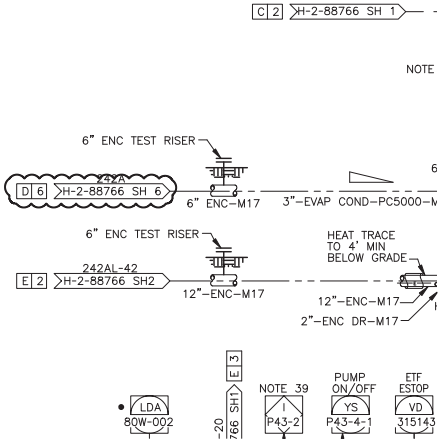

ENGINEERING CHANGE NOTICE
CONTINUATION SHEET

ECN NO.: 715508

Document/Drawing No. H-2-88766 Sheet 5 Revision 2

WAS: (ZONE C/2)

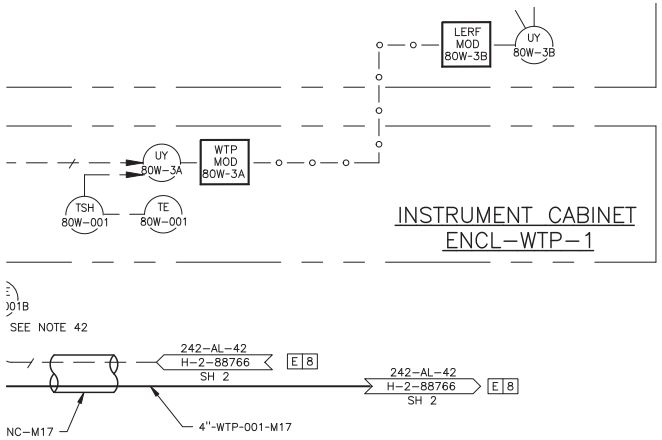

INUOUS LEAK DETECTION
E TO MH-WTP-01

3" EVAP COND-PC5000-M17 TIE-IN
H-2-88766
SH 1

NOTE:

1. FOR NOTES AND SYMBOL LEGEND, SEE SH 1.

SYMBOL LEGEND

FROM TEDF LINE J

LCU 55M17 (H-2-88836)

IS: (ZONE C/2)

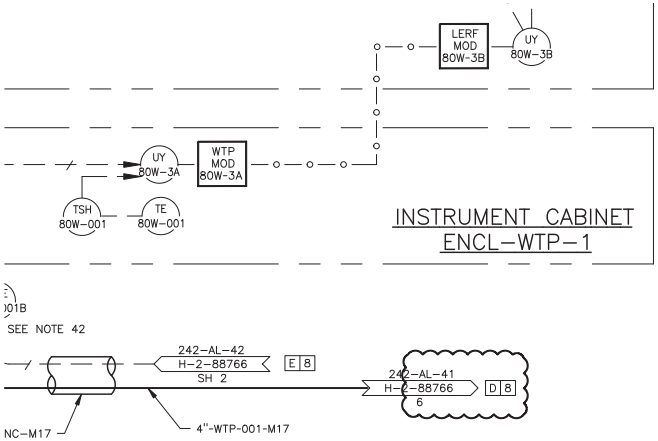

INUOUS LEAK DETECTION
E TO MH-WTP-01

3" EVAP COND-PC5000-M17 TIE-IN
H-2-88766
SH 1

NOTE:

1. FOR NOTES AND SYMBOL LEGEND, SEE SH 1.

SYMBOL LEGEND

FROM TEDF LINE J

LCU 55M17 (H-2-88836)

CONSTRUCTION NOTE: (DO NOT INCORPORATE)

THIS "WAS" CONDITION REFLECTS THE "IS" CONDITION OF ECN-715507 WHEN WORK COMPLETE.

ENGINEERING CHANGE NOTICE CONTINUATION SHEET	ECN NO.: 715508

Document/Drawing No. H-2-830097 Sheet 1 Revision 1

WAS: (ZONE E/5)

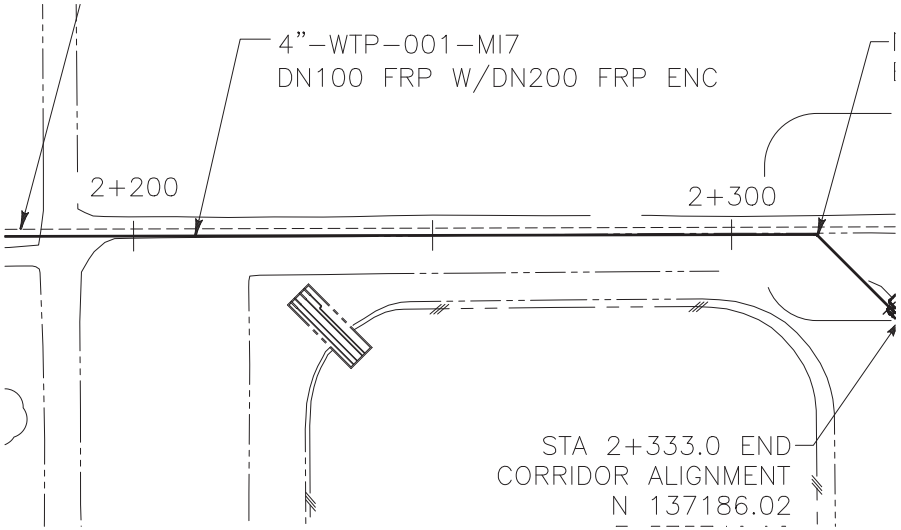

IS: (ZONE E/5)

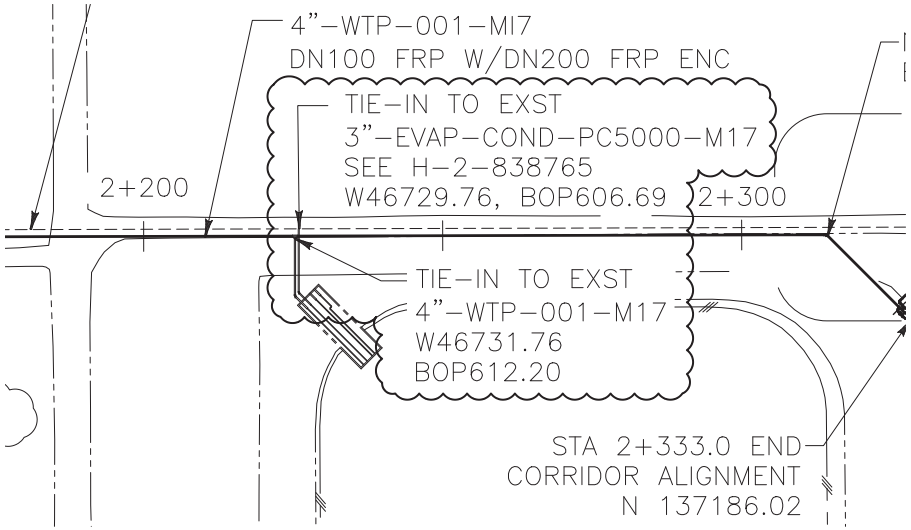

CONSTRUCTION NOTE: (DO NOT INCORPORATE)

THIS "WAS" CONDITION REFLECTS THE "IS" CONDITION OF ECN-715507 WHEN WORK COMPLETE.

ENGINEERING CHANGE NOTICE CONTINUATION SHEET	ECN NO.: 715508

Document/Drawing No. H-2-830098 Sheet 1 Revision 1

WAS: (ZONE E-F/7)

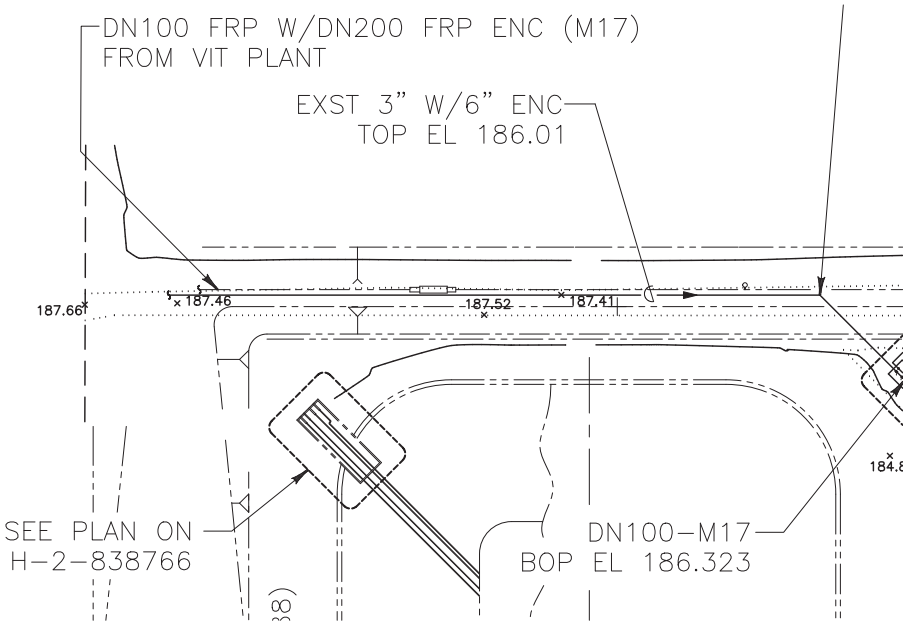

IS: (ZONE E-F/7)

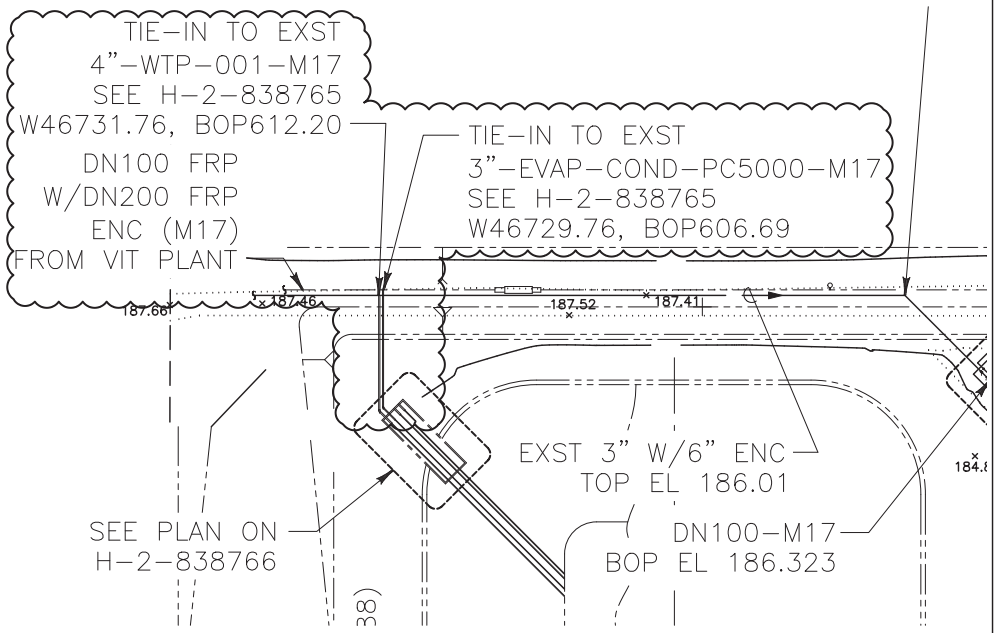

ENGINEERING CHANGE NOTICE

Prepared For the U.S. Department of Energy, Assistant Secretary for Environmental Management
By Washington River Protection Solutions, LLC., PO Box 850, Richland, WA 99352
Contractor For U.S. Department of Energy, Office of River Protection, under Contract DE-AC27-08RV14800

TRADEMARK DISCLAIMER: Reference herein to any specific commercial product, process, or service by trade name, trademark, manufacturer, or otherwise, does not necessarily constitute or imply its endorsement, recommendation, or favoring by the United States government or any agency thereof or its contractors or subcontractors. Printed in the United States of America.

Release Stamp

DATE: May 27,2020

HANFORD RELEASE

1a. **ECN No:** ECN-715509 **Rev.** 00	1b. **Project Number:** T1P226 ☐N/A
2. **Title:** LERF Basin 41 New Piping Connections - Mechanical	
3. **WA or Redline ECN:** ☐ WA ☐ REDLINE ☒ N/A	4. **Temporary Modification:** ☐ Yes ☒ No
5. **Design Type:** II	6. **Design Verification Required:** ☐Yes ☒No
7. **Safety Classification:** ☐SC ☐SS ☒GS ☐N/A	
8. **USQ Number:** ☒ N/A RPP-27195	9. **PrHA Number** **Rev.** ☒ N/A

Workflow Approval Status: For Approval
Clearance Review Restriction Type: undefined

10. **Trend Codes**

Cause	Commodity	Discipline Driver
Initial Design Release	Piping, Tubing	Mechanical

11. **Design Authority Designator**

PRJ - LERF BASIN 41

12. **Approvals**

Title	Name	Signature	Date
Design Authority	Wilson, Nathaniel W	*Wilson, Nathaniel W*	04/21/2020
Checker	Dorsh, Paul M	*Dorsh, Paul M*	04/07/2020
Document Control Approval	Meinecke, Kathryn R	*Meinecke, Kathryn R*	05/27/2020
Environmental Protection	Wall, Jeremy M	*Wall, Jeremy M*	04/30/2020
Originator	Hall, Richard B	*Hall, Richard B*	03/18/2020
Other Approver	Greenhalgh, Aaron M	*Greenhalgh, Aaron M*	04/15/2020
Other Approver	Joslyn, Cameron C	*Joslyn, Cameron C*	05/07/2020
Responsible Engineering Manager	Huntington, Matthew R	*Huntington, Matthew R*	05/11/2020

13. **Problem**

The new LERF Basin 41, associated catch basin, and ancillary equipment was installed by ECN-715507. However, this installation did not mechanically connect Basin 41 with the other LERF piping network. As such, no liquid can be transferred from Basin 41 to the other LERF basins and/or ETF, or subsequently the other LERF basins and/or ETF can not transfer feed to Basin 41.

14. **Solution**

Install two new transfer lines (4"-60M-010-M18 and 4"-60M-011-M18) from Catch Basin 41 to a tie-in point within Catch Basin 42. The installation of these two new transfer lines will allow Basin 41 to be connected with the existing LERF piping network. The installed transfer lines will utilize an FRP carrier pipe and encasement pipe as identified on the new design media, reference H-2-838765. Perform the tie-in connection to Catch Basin 42 piping as shown in H-2-838765. Excavate into the south LERF transfer line berm as necessary for installation of the new transfer lines as shown on the project design media. Install the transfer line as described in the construction specification RPP-SPEC-63632 and the manufacturer's recommendations. Ensure proper piping insulation, heat trace, and pipe supports are utilized per the project design media. Coordinate backfill of the transfer line berm with the installation of other the new transfer lines in ECN-715508. Remove the existing bling flange and install valve 60M-42-8 (see H-2-838765) as shown on this ECN.

15. **Analysis**

Perform the installation of new transfer line 4"-60M-010-M18 and new transfer line 4"-60M-011-M18 at the coordinate location identified on drawing H-2-838765. Route the new pipe lines from Catch Basin 41 to Catch Basin 42 for connection with the existing LERF piping. The Catch Basin 41 piping installation is detailed within ECN-715507. Perform all field work in accordance with the project construction specification RPP-SPEC-63632.

Design checks were performed in accordance with S&L Quality Assurance Procedure (QAP) 3.2 and 3.6.

16. **Description of Change**

H-2-79610 Sheet 1:
-Update drawing to depict the installation of transfer lines 4"-60M-010-M18 and 4"-60M-011-M18.

H-2-79613 Sheet 1:
-Update drawing sheet to show the installation of transfer lines 4"-60M-010-M18 and 4"-60M-011-M18 as they interface with the existing Catch Basin 42 piping. Install new valves within the existing Catch Basin 42 piping to facilitate necessary operations functionality.

H-2-88766 Sheet 2:
-Update the Catch Basin 42 P&ID drawing sheet to depict the interface connection of transfer lines 4"-60M-010-M18 and 4"-60M-011-M18.

H-2-830097 Sheet 1:
-Update this sheet to for installation of transfer lines 4"-60M-010-M18 and 4"-60M-011-M18.

H-2-830098 Sheet 1:
-Update this sheet to for installation of transfer lines 4"-60M-010-M18 and 4"-60M-011-M18.

RICHARD B. HALL
STATE OF WASHINGTON
53000
REGISTERED
PROFESSIONAL ENGINEER
5/27/2020

ENGINEERING CHANGE NOTICE

ECN No: ECN-715509 **Rev.** 00

16. **Description of Change**

H-2-830099 Sheet 1:
-Update plan view indicating the installation of transfer line 4"-60M-011-M18 and it's interface with the existing Catch Basin 42 piping.

H-2-830099 Sheet 2:
-Update plan view and section views as appropriate to identify the interface of transfer line 4"-60M-011-M18 following installation.

17. **Work Package Number(s)**

TBD

18. **TBDs or Holds** ☒N/A

19. **Related Structures, Systems, and Components**

a. **Related Building/Facilities** ☐N/A	b. **Related Systems** ☐N/A	c. **Related Equipment ID Nos. (EIN)** ☐N/A
LERF FACILITIES	LERF	242AL-42

20. **Engineering Drawings to be Changed** Does change affect the Electronic Routing Board? ☐

Drawing Number	Rev.	Title
H-2-79610 SH 001	03	PIPING PLAN RETENTION BASINS
H-2-79613 SH 001	05	PIPING PLAN CATCH BASIN 242AL-42
H-2-830097 SH 001	01	W-519 SITE/UTILITY SYSTEMS PLAN AND PROFILE STA 2+000 TO STA 2+333.0
H-2-830098 SH 001	01	W-519 SITE/UTILITY SYSTEMS PLAN & PROFILE LERF BASINS
H-2-830099 SH 001	02	W-519 SITE/UTILITY SYSTEMS BASIN 242AL-42 PIPE LAYOUT
H-2-830099 SH 002	01	W-519 SITE/UTILITY SYSTEMS BASIN 243AL-42 PIPE LAYOUT
H-2-88766 SH 002	16	P&ID LERF BASIN & ETF INFLUENT EVAPORATOR

21. **Related Modification Traveler** ☐N/A

MT-50497

22. **Related Documents** ☐N/A

Document Number	Rev.	Title
ECN-715507	00	LERF Basin 41 Installation - Mechanical
ECN-715508	00	LERF Basin 41 Existing Piping Connections - Mechanical
H-2-838765 SH 001	00	LERF BASIN 41 MECHANICAL GENERAL ARRANGEMENT
H-2-88766 SH 006	00	P&ID LERF BASIN & ETF INFLUENT EVAPORATOR
RPP-SPEC-63632	00	LERF Basin 41 Construction Specification

23. **Distribution**

Name	Organization
Angevine, Brennan T	MISSION ANALYSIS ENGINEERING
Blaak, Whitney S	COGNIZANT SYSTEM ENGINEERING
Demiter, Scott M	ETF OPERATIONS
Foster, Jim	242-A/AW/ETF OPERATIONS
Goessmann, Glen E	ENGINEERING PROGRAMS
Greenhalgh, Aaron M	TANK FARM PROJECTS ENGINEERING
Harris, John W	SAFETY PROGRAM SERVICES RC/P
Joslyn, Cameron C	ETF ENGINEERING
McFerran, Brandon E	242-A/AW/ETF OPERATIONS
McShane, Michael P	ENGINEERING PROGRAMS
Omberg Carro, Susan K	NUCLEAR SAFETY
Powers, Daniel J	ETF ENGINEERING
Roosendaal, Gene D	TFP PROJECT MANAGEMENT
Rutherford, Wally	ETF ENGINEERING
Sackett, Tom E	TANK FARM PROJECTS
Samoska, Jerry A	INSTRUMENT & CNTRL ENGINEERING
Shultz, Milton V	NUCLEAR SAFETY
Smith, Gregory E	TANK FARM PROJECTS ENGINEERING
Smoot, Bill R	TFP RADCON
Stamper, Lavonne J	ETF ENGINEERING
Swanson, Brad L	242-A/AW/ETF OPERATIONS
Wall, Jeremy M	RETRVL & CLOSURE/PROJ ENV CMPL
Wilson, Nathaniel W	ETF PROJECTS ENGINEERING

ENGINEERING CHANGE NOTICE CONTINUATION SHEET	ECN NO.: 715509

Document/Drawing No. H-2-79610 Sheet 1 Revision 3

CONSTRUCTION NOTE: (DO NOT INCORPORATE)

THIS "WAS" CONDITION REFLECTS THE "IS" CONDITION OF ECN-715507 AND ECN-715508 WHEN WORK COMPLETE.

WAS: (ZONE E/6-8)

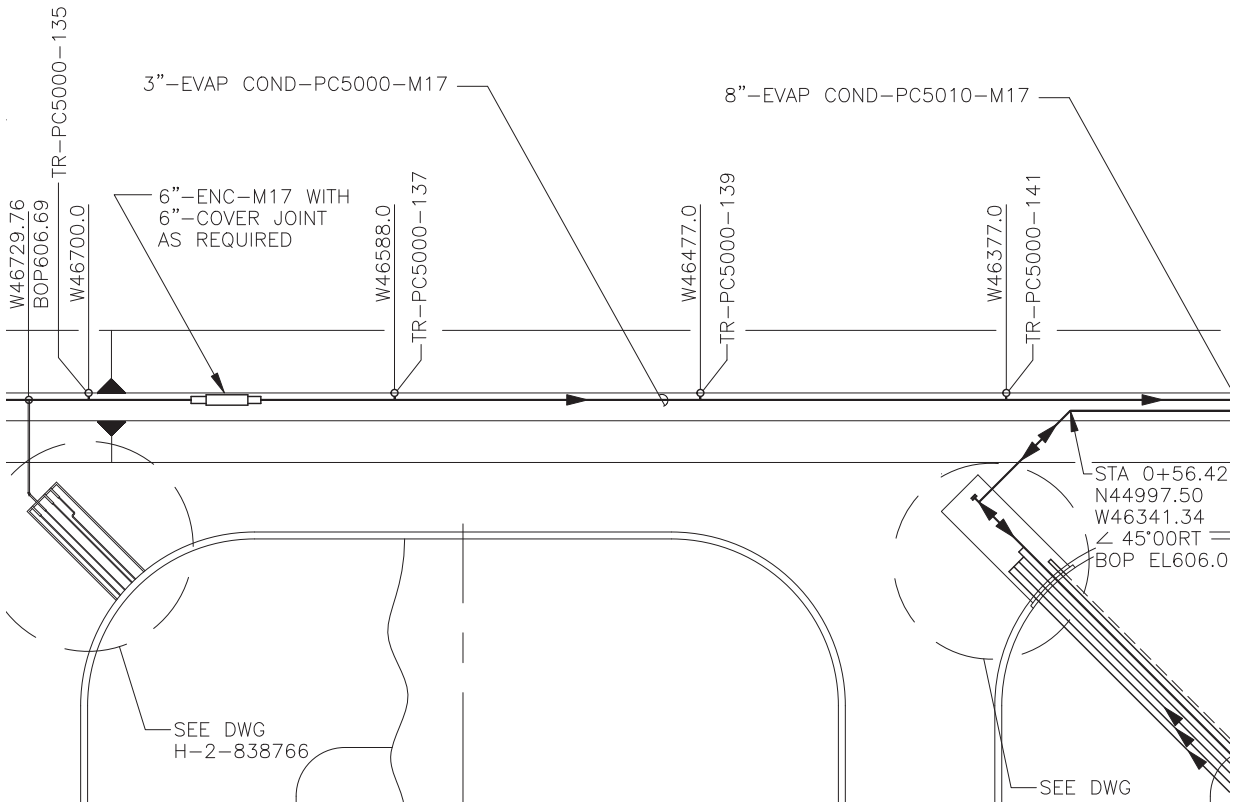

ENGINEERING CHANGE NOTICE CONTINUATION SHEET	ECN NO.: 715509

Document/Drawing No. H-2-79610 Sheet 1 Revision 3

IS: (ZONE E/6-8)

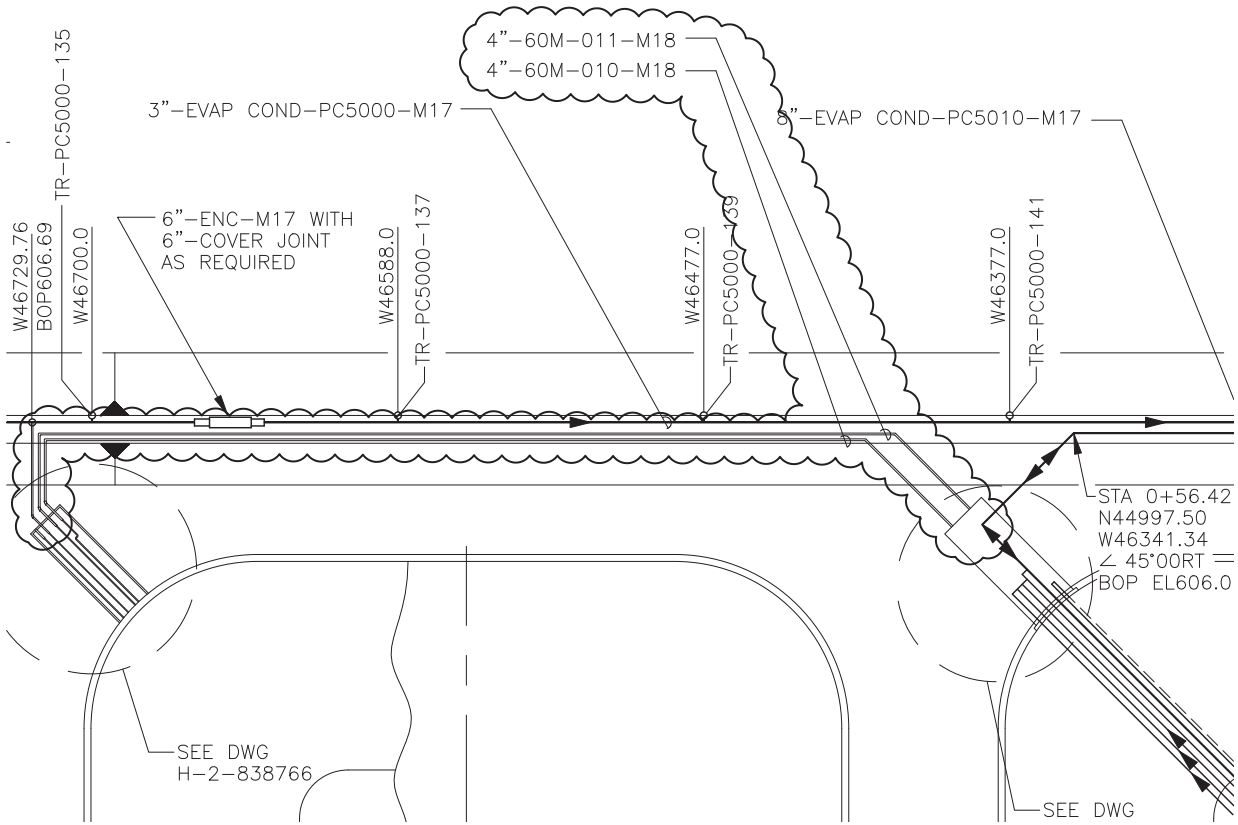

ENGINEERING CHANGE NOTICE CONTINUATION SHEET	ECN NO.: 715509

Document/Drawing No. H-2-79613 Sheet 1 Revision 5

WAS: (ZONE B-D/6-8)

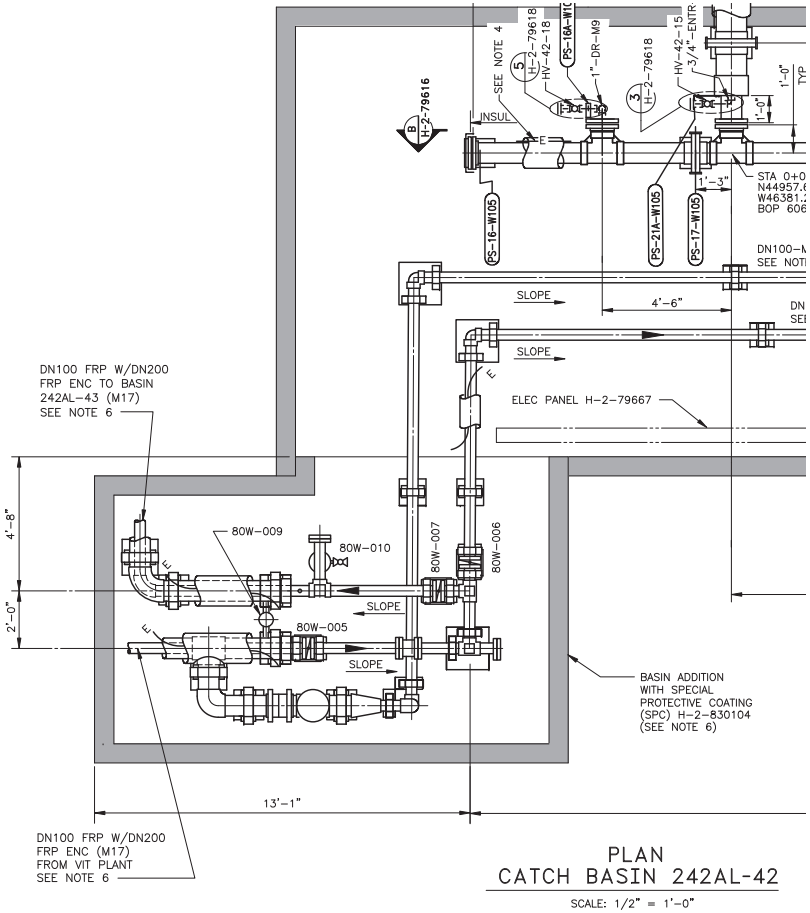

PLAN
CATCH BASIN 242AL-42
SCALE: 1/2" = 1'-0"

IS: (ZONE B-D/6-8)

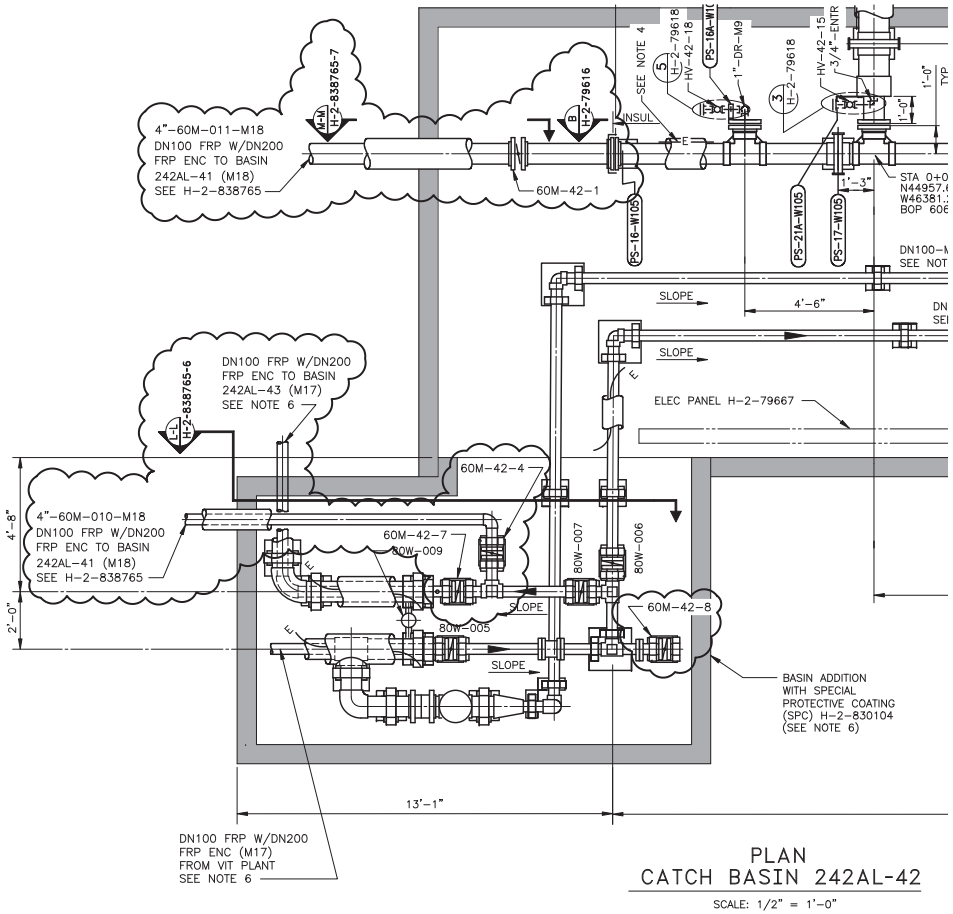

PLAN
CATCH BASIN 242AL-42
SCALE: 1/2" = 1'-0"

ENGINEERING CHANGE NOTICE
CONTINUATION SHEET

ECN NO.: 715509

Document/Drawing No. H-2-88766 Sheet 2 Revision 16

WAS: (ZONE E/3-4)

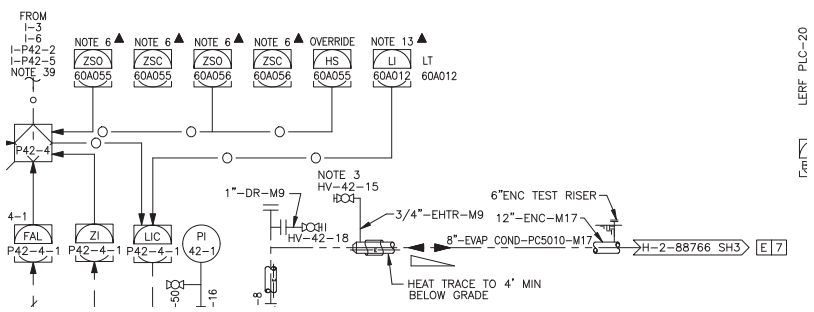

WAS: (ZONE E/6)

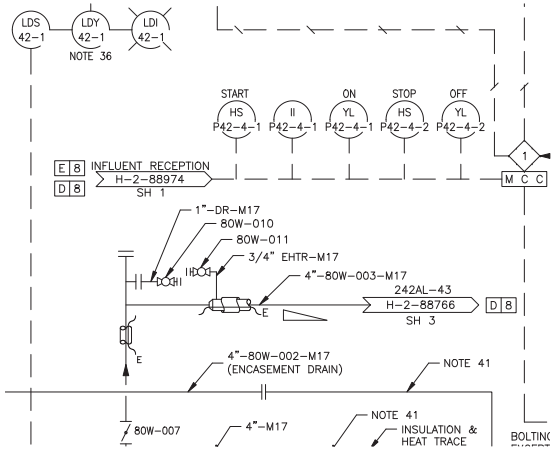

WAS: (ZONE D/7)

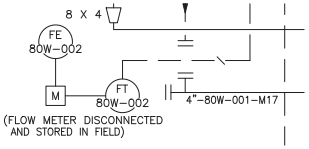

IS: (ZONE E/3-4)

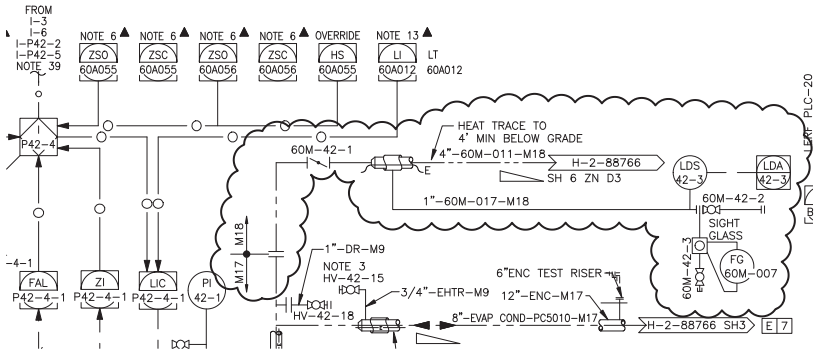

IS: (ZONE E/6)

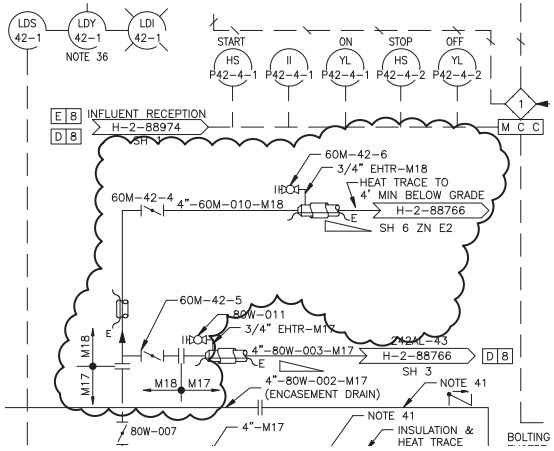

IS: (ZONE D/7)

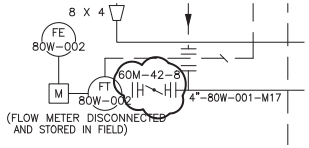

ENGINEERING CHANGE NOTICE CONTINUATION SHEET	ECN NO.: 715509

Document/Drawing No. H-2-830097 Sheet 1 Revision 1

CONSTRUCTION NOTE: (DO NOT INCORPORATE)

THIS "WAS" CONDITION REFLECTS THE "IS" CONDITION OF ECN-715507 AND ECN-715508 WHEN WORK COMPLETE.

WAS: (ZONE E/5)

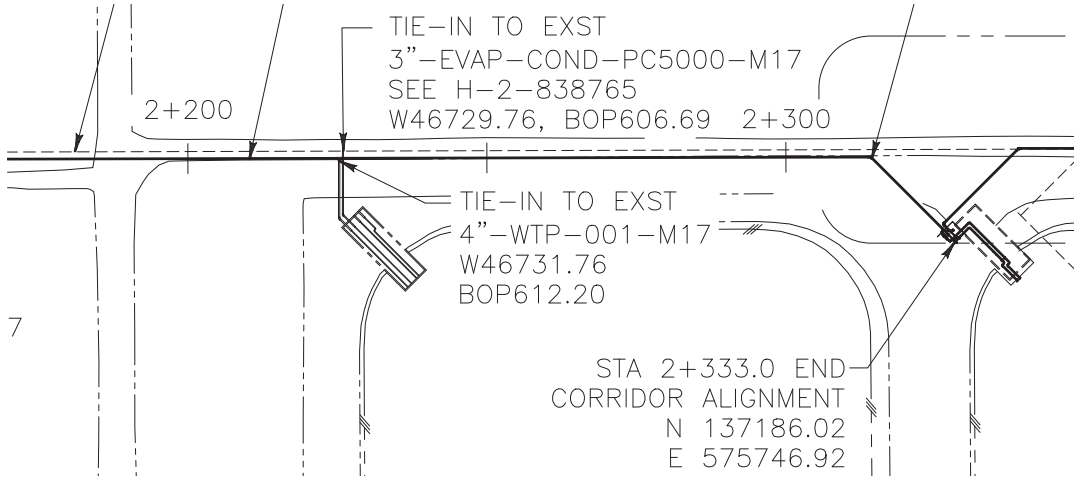

IS: (ZONE E/5)

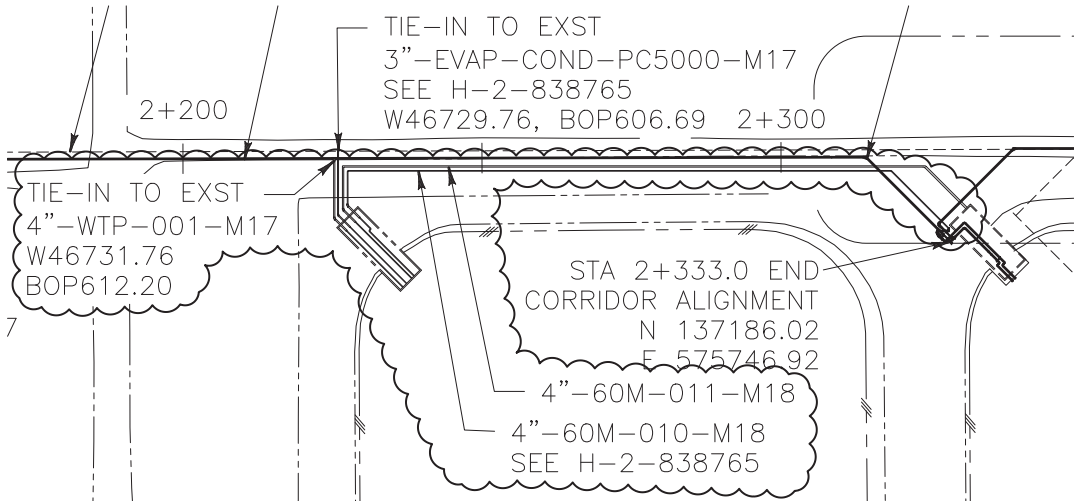

CONSTRUCTION NOTE: (DO NOT INCORPORATE)

THIS "WAS" CONDITION REFLECTS THE "IS" CONDITION OF ECN-715507 AND ECN-715508 WHEN WORK COMPLETE.

ENGINEERING CHANGE NOTICE CONTINUATION SHEET	ECN NO.: 715509

Document/Drawing No. H-2-830098 Sheet 1 Revision 1

WAS: (ZONE E-F/7)

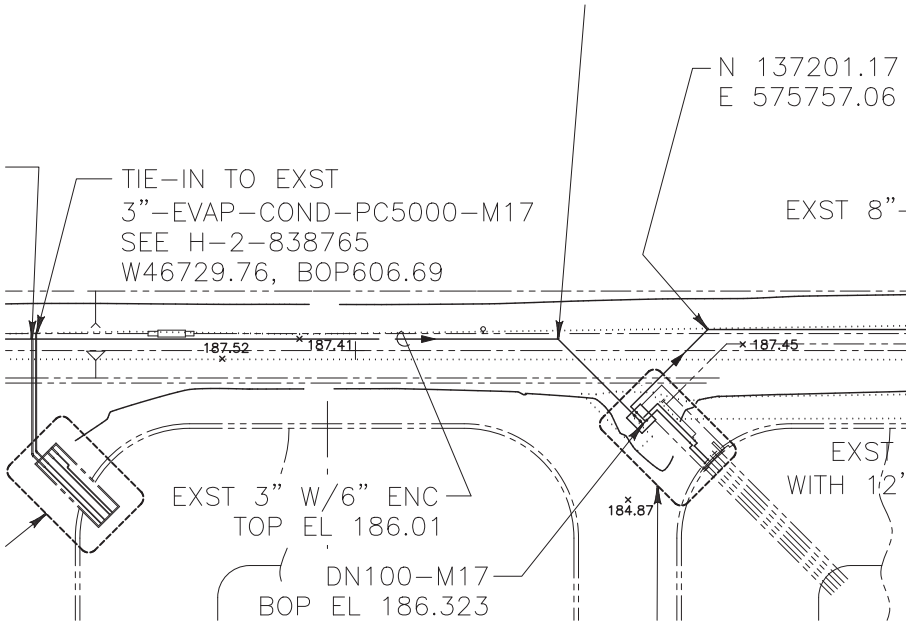

IS: (ZONE E-F/7)

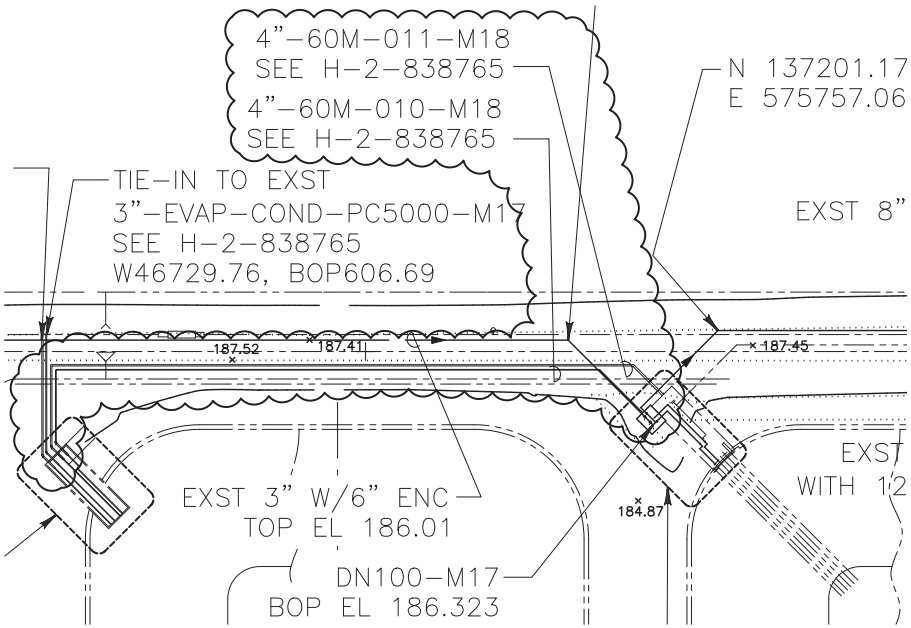

ENGINEERING CHANGE NOTICE CONTINUATION SHEET	ECN NO.: 715509

Document/Drawing No. H-2-830099 Sheet 1 Revision 2

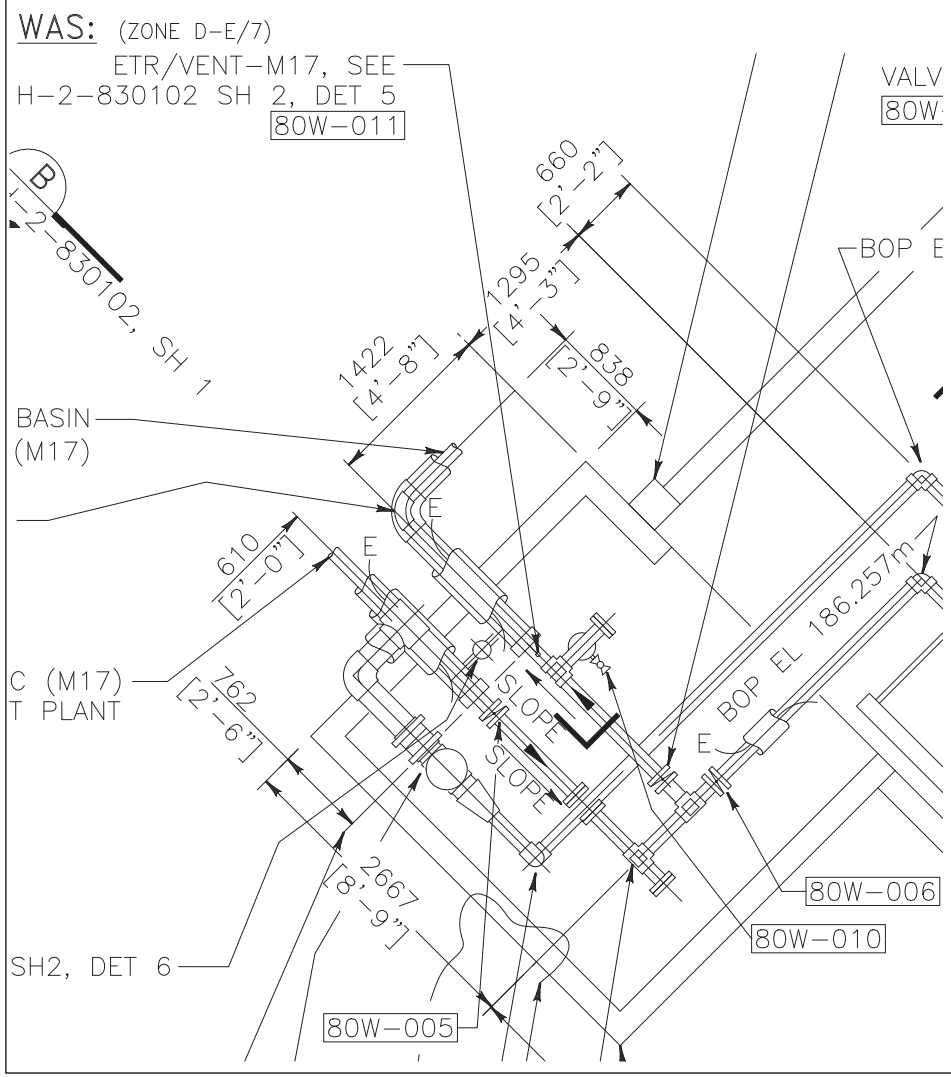

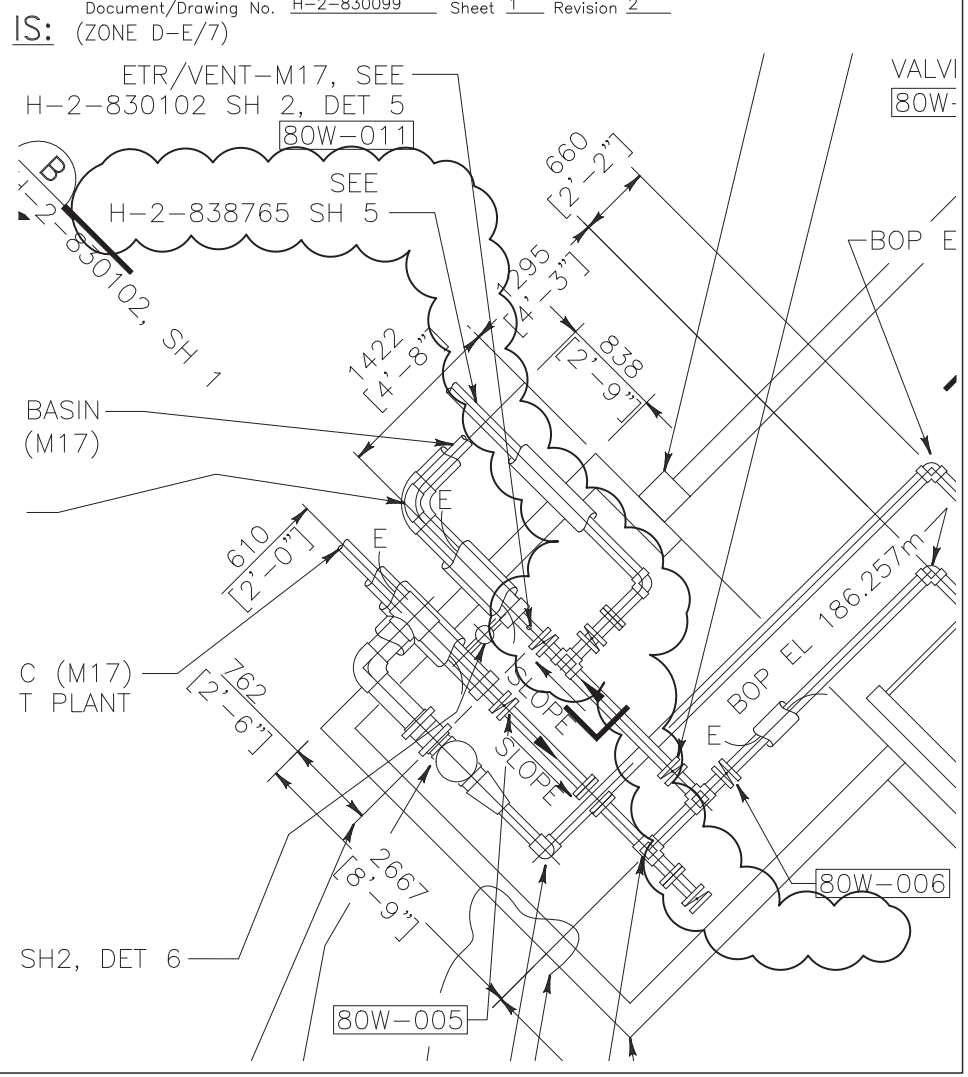

ENGINEERING CHANGE NOTICE CONTINUATION SHEET	ECN NO.: 715509

Document/Drawing No. H-2-830099 Sheet 2 Revision 1

WAS: (ZONE E/7)

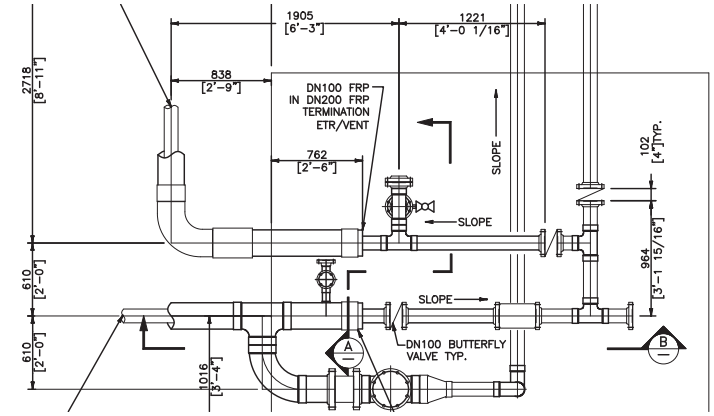

WAS: (ZONE B/6)

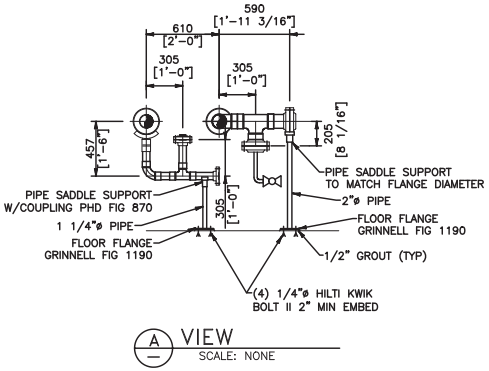

WAS: (ZONE D/1)

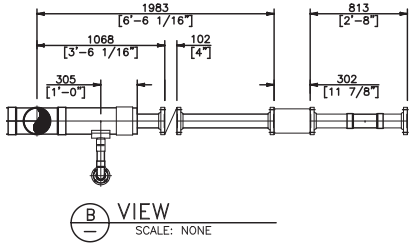

IS: (ZONE E/7)

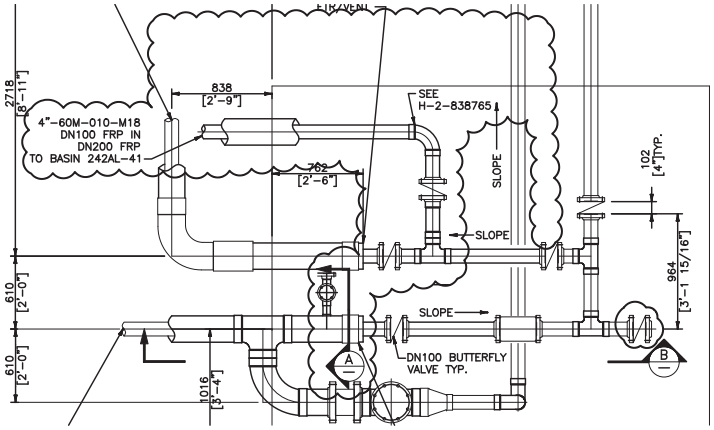

IS: (ZONE B/6)

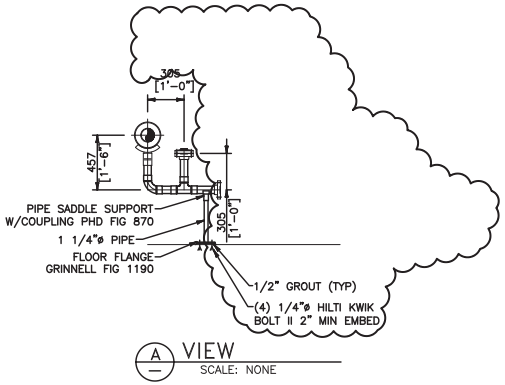

IS: (ZONE D/1)

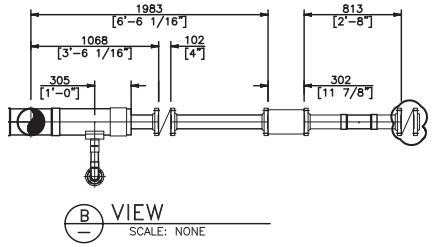

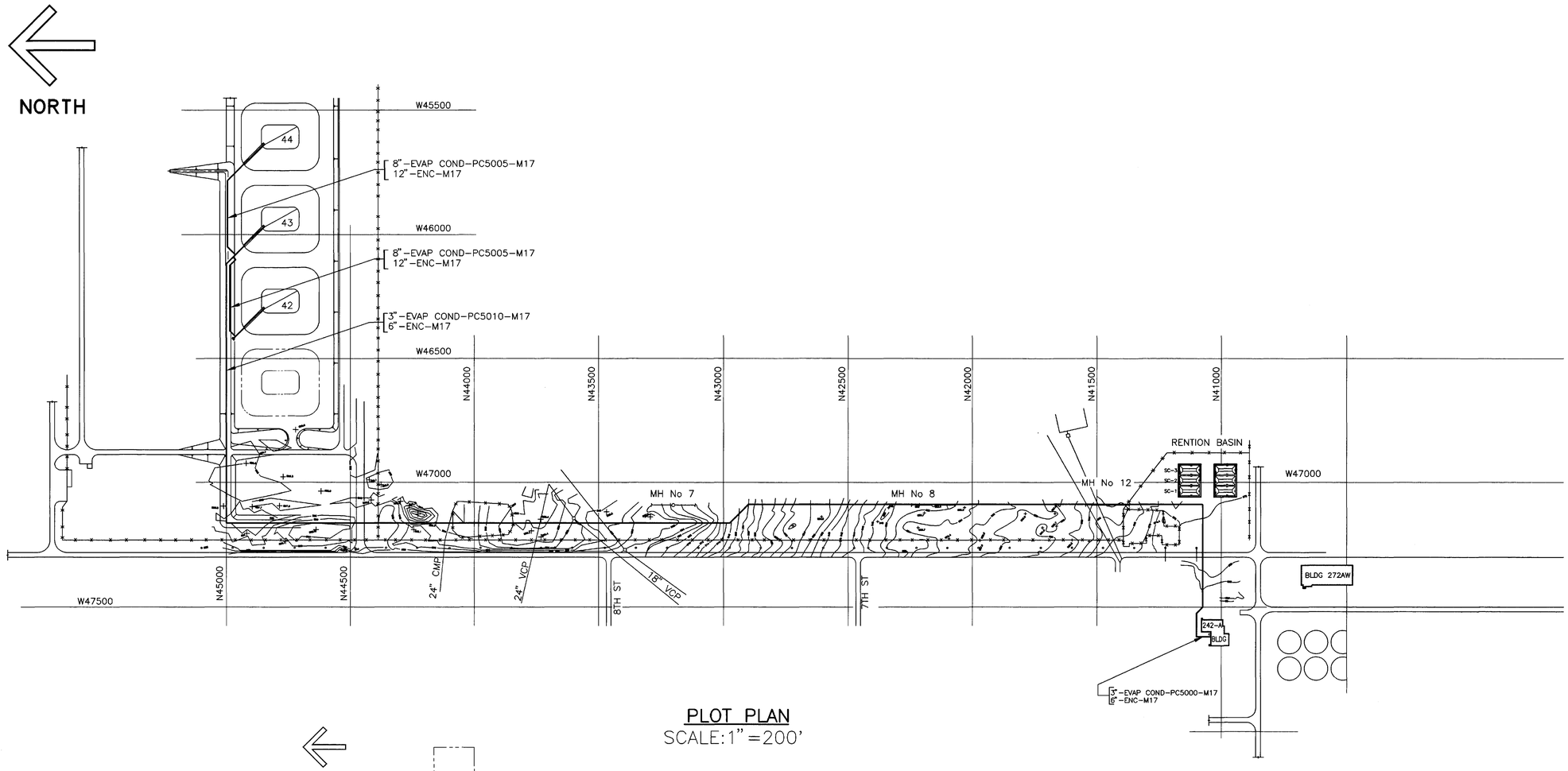

PLOT PLAN
SCALE: 1" = 200'

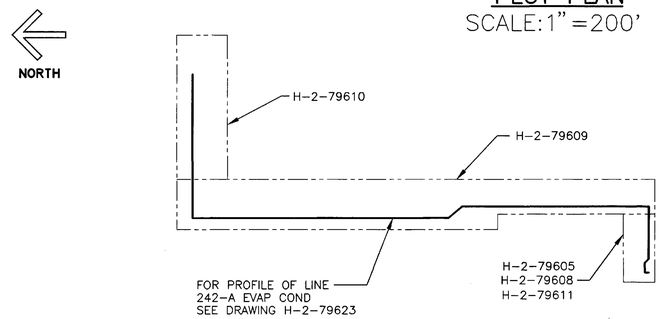

DRAWING KEY PLAN
SCALE: NONE

DWG NO	TITLE	REF NUMBER	TITLE
		H-2-79581	DWG LIST
DRAWING TRACEABILITY LIST		REFERENCES	

REV NO	DESCRIPTION	REV BY DATE	CHK BY DATE	DFTG APVD DATE	COG ENGR / COMPANY
3	REV ECN 646829 REDRAWN TO AUTOCAD PER DIR	PRW 7/22/98	9/9/98	9/11/98	9-29-98

REVISIONS

NEXT USED ON

CADFILE B079604A CADCODE WIN95:ACD2:14.0:SS

CHK PRINT ☐ DATE COMMENT PRINT ☐ DATE

2 PLOT SCALE: 1=1

DRAWN BY
CHECKED
DFTG APVD
COG ENGR
APVD
APVD
APVD
APVD
APVD

SEE PREVIOUS REVISION

U.S. DEPARTMENT OF ENERGY
Richland Operations Office
WASTE MANAGEMENT FEDERAL SERVICES OF HANFORD

PIPING PLOT & KEY PLANS 242-A EVAP COND STREAM

SIZE	BLDG NO	INDEX NO	DWG NO	REV
F	0110/ 0304	209E/ 282AL	H-2-79604	3

SCALE SHOWN EDIT 123424 SHEET 1 OF 1

GTITLE.DWG (10-96)

SH 1 OF 1 REV 3
DWG NO H-2-79604

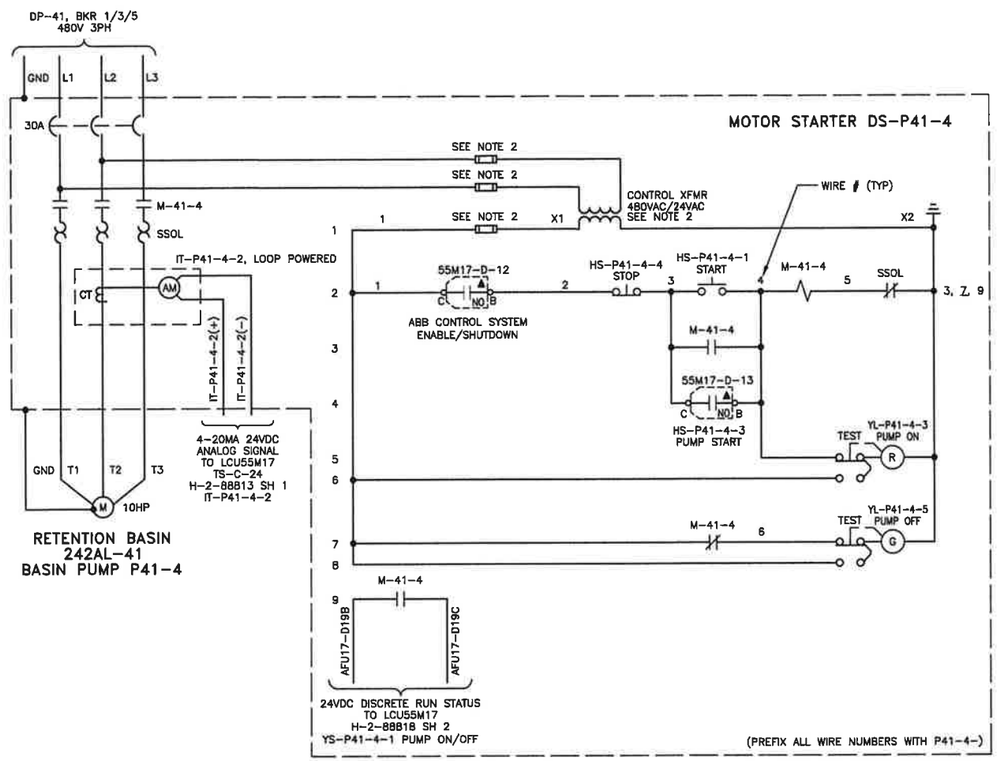

MOTOR STARTER DS-P41-4 ELEMENTARY DIAGRAM

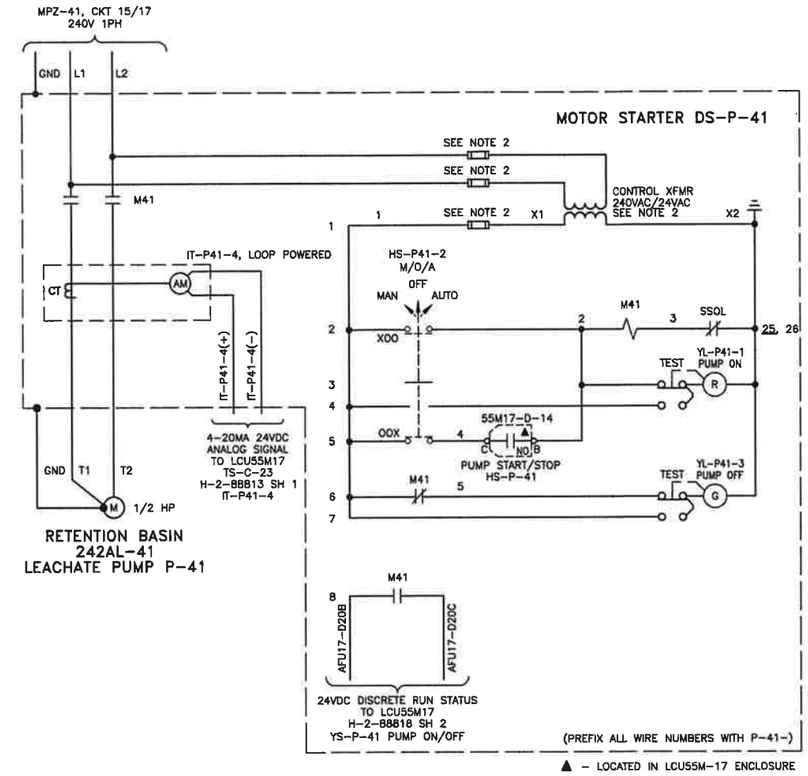

MOTOR STARTER DS-P-41 ELEMENTARY DIAGRAM

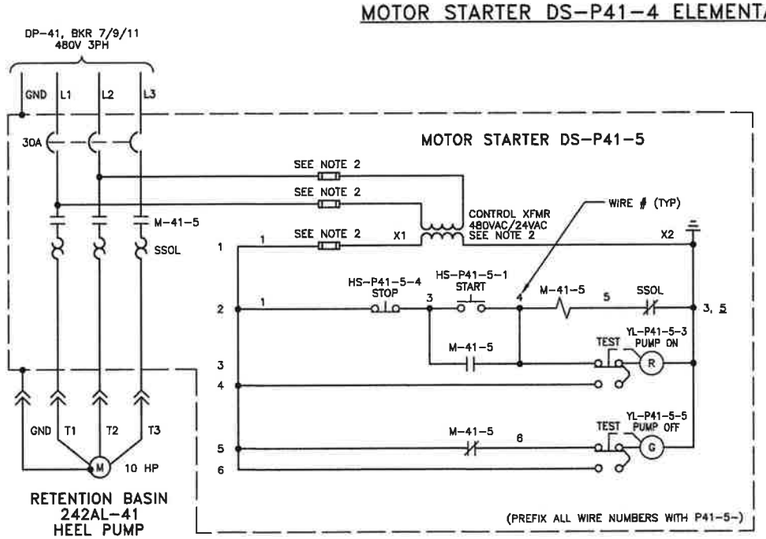

MOTOR STARTER DS-P41-5 ELEMENTARY DIAGRAM

NOTES:

1. SEE DRAWING H-2-838746 FOR ABBREVIATIONS, LEGEND, & GENERAL NOTES.
2. CONTROL TRANSFORMER AND FUSES SHALL BE SIZED BY MOTOR CONTROLLER MANUFACTURER, AND SIZES/RATINGS ADDED TO DRAWING DURING AS-BUILTING.

LORI B. WEIDNER
STATE OF WASHINGTON
38876
REGISTERED PROFESSIONAL ENGINEER
5/20/2020

DATE: May 20,2020
HANFORD RELEASE

DWG NUMBER	TITLE	NEXT USED ON
	DRAWING TRACEABILITY LIST	
H-2-838745	DRAWING LIST/TITLE SHEET	
REF NUMBER	TITLE	
	REFERENCES	

REV NO	DESCRIPTION
0	RELEASED PER EDT-882464

REVISIONS

BLDG NO: 242-AL, 242AL-41, 242AL-71
INDEX NO: 5903, 7302

CAUTION: NOT COMPLETE WITHOUT CURRENT CHANGE DOCUMENTS FROM DATABASE.

	NAME	DATE
DRAFTER	R CONLEY	05/20/20
DESIGN ENGINEER	D R CHAPMAN	05/20/20
ENGINEERING TECH REVIEWER	S P O'HARA	05/20/20
ENGINEER CHARGE	L B WEIDNER	05/20/20
DESIGN AUTHORITY	N W WILSON	05/20/20

U.S. DEPARTMENT OF ENERGY
Office of River Protection

ELECTRICAL
ELEMENTARY DIAGRAM
BASIN 41 PUMPS

SIZE F | DRAWING NUMBER H-2-79668 | SHEET 6 | REV 00
SCALE NONE
29788

ABBREVIATIONS

AP	ANGLE POINT
ASTM	AMERICAN SOCIETY FOR TESTING AND MATERIALS
AWG	AMERICAN WIRE GAUGE
BC	BOLTED CAP
BOM	BILL OF MATERIALS
BOP	BOTTOM OF PIPE
BOT	BOTTOM
BW	BUTT WELD
CDF	CONTROLLED DENSITY FILL
CF	CUBIC FOOT
C.I.	CAST IRON
CL	CENTERLINE
CO	COMPANY
CONC	CONCRETE
BOP EL.	BOTTOM OF PIPE ELEVATION
CJ	CONSTRUCTION JOINT
CKT	CIRCUIT BREAKER
CND	CONDUIT
CO	CLEAN OUT
CORP	CORPORATION
DB	DIRECT BURY
DIA	DIAMETER
DP	DISTRIBUTION PANELBOARD
DR-RBR-R	DRAIN-RETENTION BASIN RISER
DWG	DRAWING
E	ELECTRICAL
E. INV.	EAST INVERT
EL	ELEVATION
ELEV	ELEVATION
EP	EDGE OF PAVEMENT
EQ	EQUAL
EW	EACH WAY
EX	EXISTING
EXST	EXISTING
FF	FAR FACE
FLG	FLANGE
FNPT	FEMALE NATIONAL PIPE THREAD
FOF	FACE OF FLANGE
GALV	GALVANIZED
GDM	GEOSYNTHETIC DRAINAGE MATERIAL
GCL	GEOSYNTHETIC CLAY LINER
GND	GROUND
GR	GRADE
HDPE	HIGH DENSITY POLYETHYLENE
HH	HANDHOLE
HMA	HOT MIXED ASPHALT
HORIZ.	HORIZONTAL
IBC	INTERNATIONAL BUILDING CODE
I&C	INSTRUMENTATION & CONTROLS
ID	INNER DIAMETER
IE	INVERT ELEVATION
INC.	INCORPORATED
INV. EL	INVERT ELEVATION
KAIC	KILO AMPERE INTERRUPTING CAPACITY
LCH-R	LEACHATE RISER
LF	LINEAR FEET
LG	LONG
LT	LEFT
MAT'S	MATERIALS
MAX	MAXIMUM
MC	MOTOR CONTROLLER
MFG	MANUFACTURED
MH	MAN HOLE
MIL	0.001 INCH
MIN	MINIMUM
MK	MARK
MNPT	MALE NATIONAL PIPE THREAD
MO	MOBILE OFFICE
MPZ	MINI POWER CENTER, MINI POWER ZONE
NC	NORMALLY CLOSED
NEC	NATIONAL ELECTRICAL CODE
NF	NEAR FACE
N. INV.	NORTH INVERT
NO	NORMALLY OPEN
NST	NOT STEEPER THAN
NTS	NOT TO SCALE
OC	ON CENTER
OD	OUTSIDE DIAMETER
PBX	PULLBOX
PIV	POST INDICATOR VALVE
PH	PHASE
PL	PLACES
PSF	POUNDS PER SQUARE FOOT
PSI	POUNDS PER SQUARE INCH
P.T.	PRESSURE TREATED
PVC	POLYVINYL CHLORIDE
RAD	RADIUS
RB-SR	RETENTION BASIN SAMPLE PORT RISER
RB-R	RETENTION BASIN RISER
REQD	REQUIRED
RF	RAISED FACE
RGS	RIGID GALVANIZED STEEL (CONDUIT)
RMC	RIGID METAL CONDUIT
RT	RIGHT
RW	RAW WATER
S. INV.	SOUTH INVERT
SAN	SANITARY SEWER
SCH	SCHEDULE
SD	STORM DRAIN
SDR	STANDARD DIMENSIONAL RATIO
SF	SQUARE FOOT
SIM	SIMILAR
SNS	SANITARY SEWER
SP	SPACE
SSMH	SANITARY SEWER MANHOLE
SP	SPACING
SQ.	SQUARE
SQ.FT.	SQUARE FOOT
STA	STATION
STL	STEEL
SST	STAINLESS STEEL
SW	SANITARY WATER
SW	SOCKET WELD
THK	THICK
THRU	THROUGH
TOA	TOP OF ASPHALT
TOC	TOP OF CONCRETE
TYP	TYPICAL
UL	UNDERWRITERS LABORATORIES
VERT.	VERTICAL
VPI	VERTICAL POINT OF INFLECTION
W. INV.	WEST INVERT
WWF	WELDED WIRE FABRIC
XFMR	TRANSFORMER

LEGEND

SYMBOLS

702.0	CONTOURS
	SAWCUT LINE
S	SANITARY SEWER SERVICE
	GRID LINE
EP	EDGE OF PAVEMENT
X	FENCE
	BURIED UTILITIES
RW	RAW WATER LINE
W	SANITARY WATER LINE
E	ELECTRICAL LINE
T T	TELECOMMUNICATION LINE
SD	STORM DRAIN LINE
C C	13.8 KV OVERHEAD POWER
	SIGN
	THRUST BLOCK
	ELBOW
	GATE VALVE
	POST INDICATOR VALVE
	FIRE HYDRANT
	BOLLARD
	UTILITY POLE
UG	UNDERGROUND UTILITY MARKER
	SURVEY CONTROL MONUMENT
	TEE
	SANITARY SEWER CLEANOUT
	RISER
	STAIRWAY
	CAP
	CENTER LINE
	MAN HOLE
A H	DETAIL CALLOUT
A	DETAIL CALLOUT
	LIGHT POLE
	DUPLEX RECEPTACLE, NEMA STYLE AS NOTED
	SPECIALTY RECEPTACLE, STYLE AS NOTED
	SPECIALTY RECEPTACLE, STYLE AS NOTED
H	ELECTRICAL HANDHOLE
	GRAVEL/SLOPE STABILIZATION/AGGREGATE BASE COURSE/GRANULAR BASE COURSE CDF/PEA GRAVEL/CRUSHED ROCK/ DRAINAGE GRAVEL
	SAND/PIPE BEDDING MATERIAL
	CONCRETE AREA
	COMPACTED BACKFILL
	SUBGRADE
	SOIL/ BENTONITE
	GEOSYNTHETIC DRAINAGE MATERIAL (GDM)

GENERAL NOTES:

1. PRIOR TO STARTING WORK IN AN AREA, VERIFY REFERENCE ELEVATIONS, COORDINATES, AND DIMENSIONS (ALL SHOWN IN PARENTHESES) WITH SURVEY EQUIPMENT. CONTACT PROJECT ENGINEER BEFORE PROCEEDING WITH CONSTRUCTION IF REFERENCE ELEVATION SHOWN ON DRAWING DIFFERS FROM FIELD VERIFIED ELEVATION BY MORE THAN 0.10 FEET, OR IF A COORDINATE OR DIMENSION DIFFERS BY MORE THAN 0.5 FEET.

2. EXISTING UTILITIES, PIPING SIZES, MATERIALS, LOCATIONS, AND ELEVATIONS ARE SCHEMATICALLY SHOWN IN AN APPROXIMATE WAY ONLY AND MAY VARY FROM THAT SHOWN. THE CONTRACTOR SHALL DETERMINE THE EXACT LOCATION OF ALL EXISTING UTILITIES BEFORE COMMENCING WORK AND AGREES TO BE FULLY RESPONSIBLE FOR ANY AND ALL DAMAGES WHICH MIGHT BE OCCASIONED BY FAILURE TO EXACTLY LOCATE ANY AND ALL UTILITIES. QUANTITIES SHOWN ARE FOR BIDDING PURPOSES ONLY. THE CONTRACTOR IS RESPONSIBLE FOR CORRECT LENGTHS AND QUANTITIES. THE CONTRACTOR SHALL BE RESPONSIBLE FOR REPAIRING DAMAGED LINES AT CONTRACTOR'S EXPENSE.

3. THE EXACT LOCATION OF EXISTING UTILITIES AND MONUMENTS SHALL BE FIELD VERIFIED PRIOR TO BEGINNING CONSTRUCTION. TIE-IN LOCATIONS, ELEVATIONS, AND INVERTS ARE SHOWN USING THE BEST INFORMATION AVAILABLE AT THE TIME OF DESIGN AND MAY BE ADJUSTED IN THE FIELD AS NEEDED WITH THE APPROVAL OF THE ON-SITE CONSTRUCTION ENGINEER.

4. UNLESS NOTED OTHERWISE, RETAIN AND PROTECT EXISTING FENCES, ASPHALT, STRIPING, ETC. ADJACENT TO THE SITE. REPAIR DAMAGE BY CONTRACTOR'S OPERATIONS AT CONTRACTOR'S EXPENSE.

5. RECORD DRAWINGS: CONTRACTOR SHALL BE REQUIRED TO MARK AND KEEP RECORD OF ANY CHANGES TO CONTRACT DOCUMENTS WHICH ARE MADE DURING COURSE OF CONSTRUCTION. AFTER COMPLETION OF WORK AND BEFORE FINAL ACCEPTANCE, CONTRACTOR SHALL TURN OVER TO PROJECT ENGINEER ONE COMPLETE SET OF CONTRACT DOCUMENTS SHOWING ALL "AS-BUILT" CHANGES.

6. CLEARING AND GRUBBING SHALL CONSIST OF REMOVING ALL MATERIALS WITHIN PROJECT LIMITS THAT WILL INTERFERE WITH CONSTRUCTION.

7. ALL QUANTITIES AS SHOWN ARE APPROXIMATE AND SHALL BE VERIFIED BY THE CONTRACTOR.

8. FOR CONSTRUCTION SPECIFICATION SEE RPP-SPEC-63632.

9. DESIGN MATERIAL PROPERTY:

   CONCRETE Fc=4500 PSI @ 28 DAYS
   REN'F STL Fy=60,000 PSI

10. CONCRETE PROTECTION FOR REINFORCEMENT SHALL BE AS FOLLOWS UNLESS OTHERWISE NOTED:

    FOOTING & SLABS ON GROUND 3" CLR BOTTOM & SIDES
    FORMED SURFACES: 1 1/2" CLR

11. REBAR LAP SPLICES NOT OTHERWISE SHOWN SHALL BE 50 BAR DIAMETER.

12. TOLERANCES SHALL CONFORM TO ACI: 301 OR AS NOTED OTHERWISE.

13. PIPE LINE IDENTIFICATION:

    1 1/2" LCH-R-M36
    - M36 — PIPE CODE PER SPECIFICATION
    - LCH-R — SERVICE
    - 1 1/2" — LINE SIZE

    SERVICE LEGEND:

LCH-R	LEACHATE RISER
RB-R	RETENTION BASIN RISER
RB-SR	RETENTION BASIN SAMPLE PORT RISER
DR-RBR-R	DRAIN-RETENTION BASIN RISER

14. CHAMFER ALL SHARP CORNERS OF HDPE PIPE MATERIAL IN CONTACT WITH BASIN LINER MATERIAL.

15. HILTI HIT-HY 200 ADHESIVE WITH SST ANCHOR RODS, ASTM F593 TP 316. 1/2" DIAMETER WITH 3-1/2" EMBEDMENT, NUT AND WASHERS SHALL BE USED TO ATTACH GEOSYNTHETIC COMPONENTS TO CONCRETE. GASKETS SHALL BE USED UNDER BATTEN PLATES.

16. FINISH ELEVATIONS AND OUT OF PLANE TOLERANCE SHALL BE ± 0.10 FEET IN ALL LOCATIONS EXCEPT THE FOLLOWING: TOP OF THE BASIN FOR A PERIMETER STRIP OF 6 FEET FROM THE ANCHOR WALL; A STRIP OF 16 FEET (8 FEET EITHER SIDE OF THE CENTERLINE OF CATCH BASIN EXTENDING FROM THE CATCH BASIN TO THE TOE OF THE SLOPE INCLUDING THE SUMP; GRADIENTS FOR FLOW PATH TO THE LEACHATE CHANNEL IN THE BOTTOM OF THE BASIN AND SUMP SHALL BE CONTINUOUS AND UNOBSTRUCTED AS SHOWN IN THE DRAWINGS. AT THE EXCLUDED LOCATIONS FINISHED ELEVATIONS AND OUT OF PLANE TOLERANCE SHALL BE PLUS 0.20 FEET, MINUS 0.10 FEET. STRAIGHTNESS AT NORTHWEST BASIN CORNER SHALL NOT EXCEED 0.04 FEET PER FOOT OR 0.13 FEET PER 100 FEET OF LENGTH.

17. GASKET MATERIAL FOR SECTIONS D & E ON H-2-838751 SH 3 TO BE 3/16 INCH FULL FACE TEFLON BONDED EPDM WITH A HARDNESS OF 50 TO 70 DUROMETER SHORE A. SST STUDS 3-1/2 INCHES LONG, 300 SERIES. TORQUE NUTS TO 40 FT LBS.

18. NO CONSTRUCTION EQUIPMENT, NOR VEHICLE SHALL DRIVE OVER THE EFFLUENT PIPES AFTER INSTALLATION.

DANIEL E. NILSSON — STATE OF WASHINGTON — 28592 — REGISTERED PROFESSIONAL ENGINEER
5-20-2020

DATE: May 26,2020 — HANFORD RELEASE

DWG NUMBER	TITLE
H-2-838745	DRAWING LIST/TITLE SHEET

DRAWING TRACEABILITY LIST — REF NUMBER / TITLE — REFERENCES — NEXT USED ON

REV NO	DESCRIPTION
0	RELEASED PER EDT-882460

REVISIONS

BLDG NO: 242-AL, 242AL-41
INDEX NO: 0000

CAUTION: NOT COMPLETE WITHOUT CURRENT CHANGE DOCUMENTS FROM DATABASE

	NAME	DATE	COMPANY
DRAFTER	P. P. CULBERTSON	04/17/2020	AREA
DRAFTING SUPERVISOR	J. R. BYERS	04/17/2020	AREA
ENGINEERING PEER REVIEWER	C. C. JOSLYN	04/20/2020	WRPS
DESIGN ENGINEER	P. M. DORSH	04/20/2020	AREA
DESIGN AUTHORITY	N. W. WILSON	04/20/2020	WRPS

U.S. DEPARTMENT OF ENERGY
Office of River Protection

LERF BASIN 41 GENERAL NOTES

SIZE	DRAWING NUMBER	SHEET	REV
F	H-2-838746	1	00

SCALE: NONE

29694

DOE_TB_F.DWG (SEPTEMBER 2019)

SCAN DATA TABLE*														
NO.	REMARKS	DEPTH	NO.	REMARKS	DEPTH	NO.	REMARKS	DEPTH	NO.	REMARKS	DEPTH	NO.	REMARKS	DEPTH
1	UNDERGROUND ELECTRIC	2.2'	11	UNDERGROUND ELECTRIC	1.8' – 3.1'	21	UNKNOWN UTILITY	3.8' – 4.3'	31	WASTE TRANSFER	3.7' – 3.9'	41	UNDERGROUND ELECTRIC	0.6' & 2.9'
2	UNDERGROUND ELECTRIC	2.5' – 2.6'	12	UNDERGROUND ELECTRIC	1.6' – 3.1'	22	UNKNOWN UTILITY	3.8' – 4.8'	32	WASTE TRANSFER	1.9' – 2.7'	42	UNKNOWN UTILITY	1.6' – 1.9' & 3.1'
3	UNDERGROUND ELECTRIC	2.5' – 2.6'	13	UNKNOWN UTILITY	4.2' – 5.6'	23	UNKNOWN UTILITY	2.5' – 2.6'	33	WASTE TRANSFER	4.6' – 4.8'	43	UNDERGROUND ELECTRIC	2.4'
4	UNDERGROUND ELECTRIC	1.6' – 1.9'	14	UNDERGROUND ELECTRIC	0.8' – 2.5'	24	UNDERGROUND ELECTRIC	1.8'	34	WASTE TRANSFER	UNKNOWN	44	UNKNOWN UTILITY	1.5' – 3.2'
5	UNDERGROUND ELECTRIC	1.8' – 1.9'	15	UNKNOWN UTILITY	1.4' – 2.0'	25	UNDERGROUND ELECTRIC	1.7' – 1.8'	35	WASTE TRANSFER	UNKNOWN	45	UNDERGROUND ELECTRIC	1.8'
6	UNDERGROUND ELECTRIC	1.3' – 2.0'	16	WASTE TRANSFER	3.8' – 4.7'	26	WASTE TRANSFER	UNKNOWN	36	WASTE TRANSFER	4.6'	46	UNDERGROUND ELECTRIC	2.3' – 2.5'
7	UNDERGROUND ELECTRIC	2.2' – 3.2'	17	UNDERGROUND ELECTRIC	1.6' – 2.2'	27	UNDERGROUND ELECTRIC	0.3' – 1.9'	37	WASTE TRANSFER	4.0'	47	UNDERGROUND ELECTRIC	1.2'
8	UNDERGROUND ELECTRIC	2.3' – 3.2'	18	UNDERGROUND ELECTRIC	2.0' – 2.3'	28	UNDERGROUND ELECTRIC	1.0' – 2.7'	38	UNDERGROUND ELECTRIC	1.3'	48	UNDERGROUND ELECTRIC	1.6'
9	UNDERGROUND ELECTRIC	2.3' – 3.0'	19	UNDERGROUND ELECTRIC	4.1' – 4.2'	29	UNDERGROUND ELECTRIC	1.5' – 2.6'	39	UNDERGROUND ELECTRIC	1.2' – 1.7'	49	UNDERGROUND ELECTRIC	1.3'
10	UNDERGROUND ELECTRIC	2.7' – 3.2'	20	UNKNOWN UTILITY	1.5' – 1.9'	30	WASTE TRANSFER	5.0' – 5.1'	40	UNKNOWN UTILITY	UNKNOWN	50	XXXXX	XXX

* GPR SCAN PERFORMED BY BNLTECH ON 11/19/19 AND 12/19/19

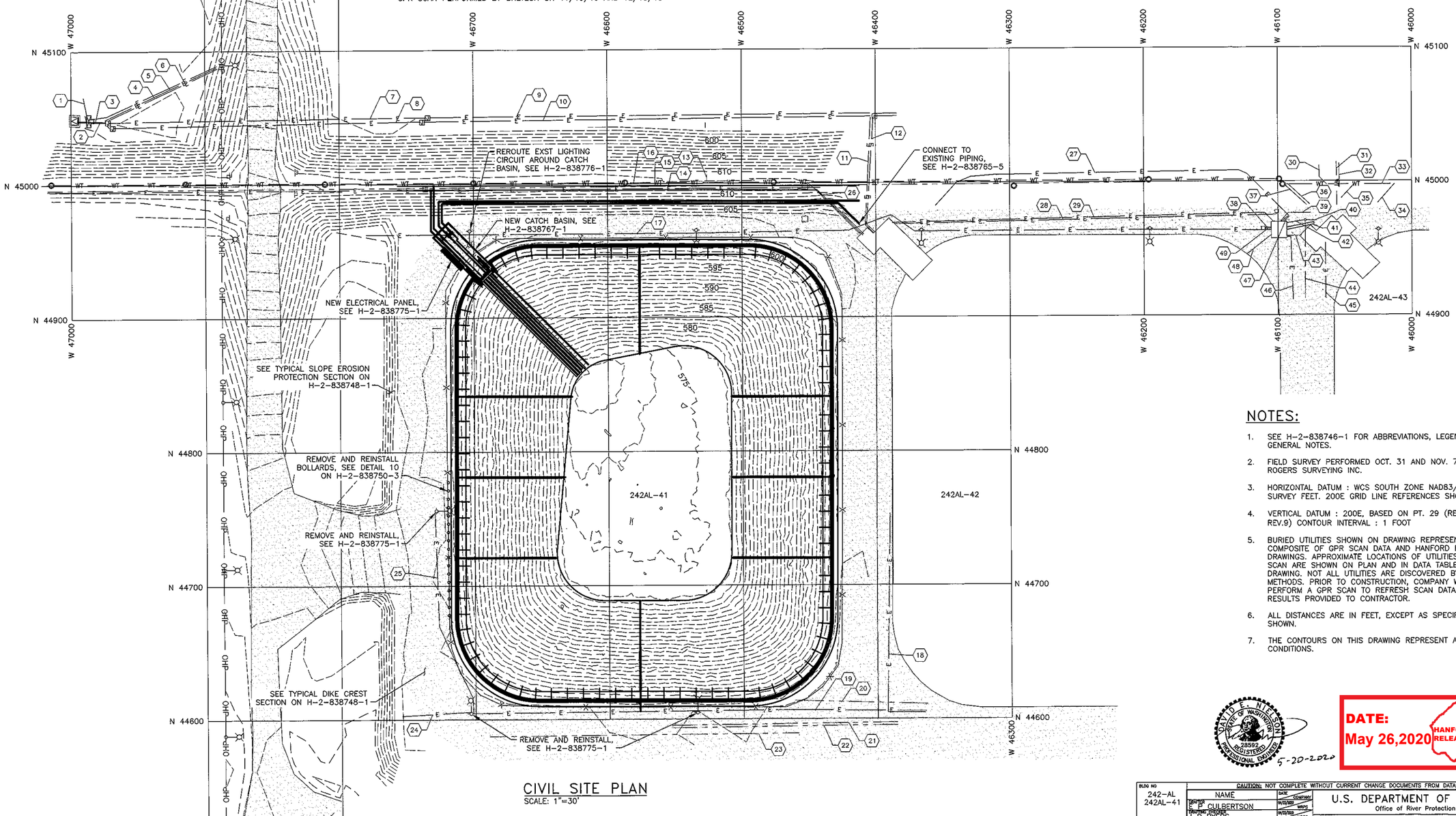

CIVIL SITE PLAN

SCALE: 1"=30'

NOTES:

1. SEE H-2-838746-1 FOR ABBREVIATIONS, LEGEND, AND GENERAL NOTES.
2. FIELD SURVEY PERFORMED OCT. 31 AND NOV. 7, 2019 BY ROGERS SURVEYING INC.
3. HORIZONTAL DATUM : WCS SOUTH ZONE NAD83/91 US SURVEY FEET. 200E GRID LINE REFERENCES SHOWN.
4. VERTICAL DATUM : 200E, BASED ON PT. 29 (REF H-2-2310 REV.9) CONTOUR INTERVAL : 1 FOOT
5. BURIED UTILITIES SHOWN ON DRAWING REPRESENT A COMPOSITE OF GPR SCAN DATA AND HANFORD REFERENCE DRAWINGS. APPROXIMATE LOCATIONS OF UTILITIES FROM GPR SCAN ARE SHOWN ON PLAN AND IN DATA TABLES ON SITE DRAWING. NOT ALL UTILITIES ARE DISCOVERED BY GPR METHODS. PRIOR TO CONSTRUCTION, COMPANY WILL PERFORM A GPR SCAN TO REFRESH SCAN DATA WITH RESULTS PROVIDED TO CONTRACTOR.
6. ALL DISTANCES ARE IN FEET, EXCEPT AS SPECIFICALLY SHOWN.
7. THE CONTOURS ON THIS DRAWING REPRESENT AS FOUND CONDITIONS.

DAVID W. WILSON STATE OF WASHINGTON 28592 REGISTERED PROFESSIONAL ENGINEER 5-20-2020

DATE: May 26,2020 HANFORD RELEASE

DWG NUMBER	TITLE
	DRAWING TRACEABILITY LIST

REF NUMBER	TITLE
H-2-838745	DRAWING LIST/TITLE SHEET
NEXT USED ON	REFERENCES

REV NO	DESCRIPTION
0	RELEASED PER EDT-882461
	REVISIONS

BLDG NO: 242-AL, 242AL-41

INDEX NO: 0110

CAUTION: NOT COMPLETE WITHOUT CURRENT CHANGE DOCUMENTS FROM DATABASE.

	NAME	DATE	COMPANY
DRAFTER	E P CULBERTSON	10/25/2020	WRPS
DRAFTING CHECKER	J R BYERS	10/25/2020	WRPS
TRANSCRIBING FIELD MEMBER	C C JOSLYN	10/27/2020	WRPS
DESIGN ENGINEER	P M CORSH	10/27/2020	WRPS
DESIGN AUTHORITY	N W WILSON	10/27/2020	WRPS

U.S. DEPARTMENT OF ENERGY
Office of River Protection

LERF BASIN 41
CIVIL
SITE PLAN

SIZE	DRAWING NUMBER	SHEET	REV
F	H-2-838747	1	00

SCALE SHOWN

29664

DOE_TB_F.DWG (SEPTEMBER 2019)

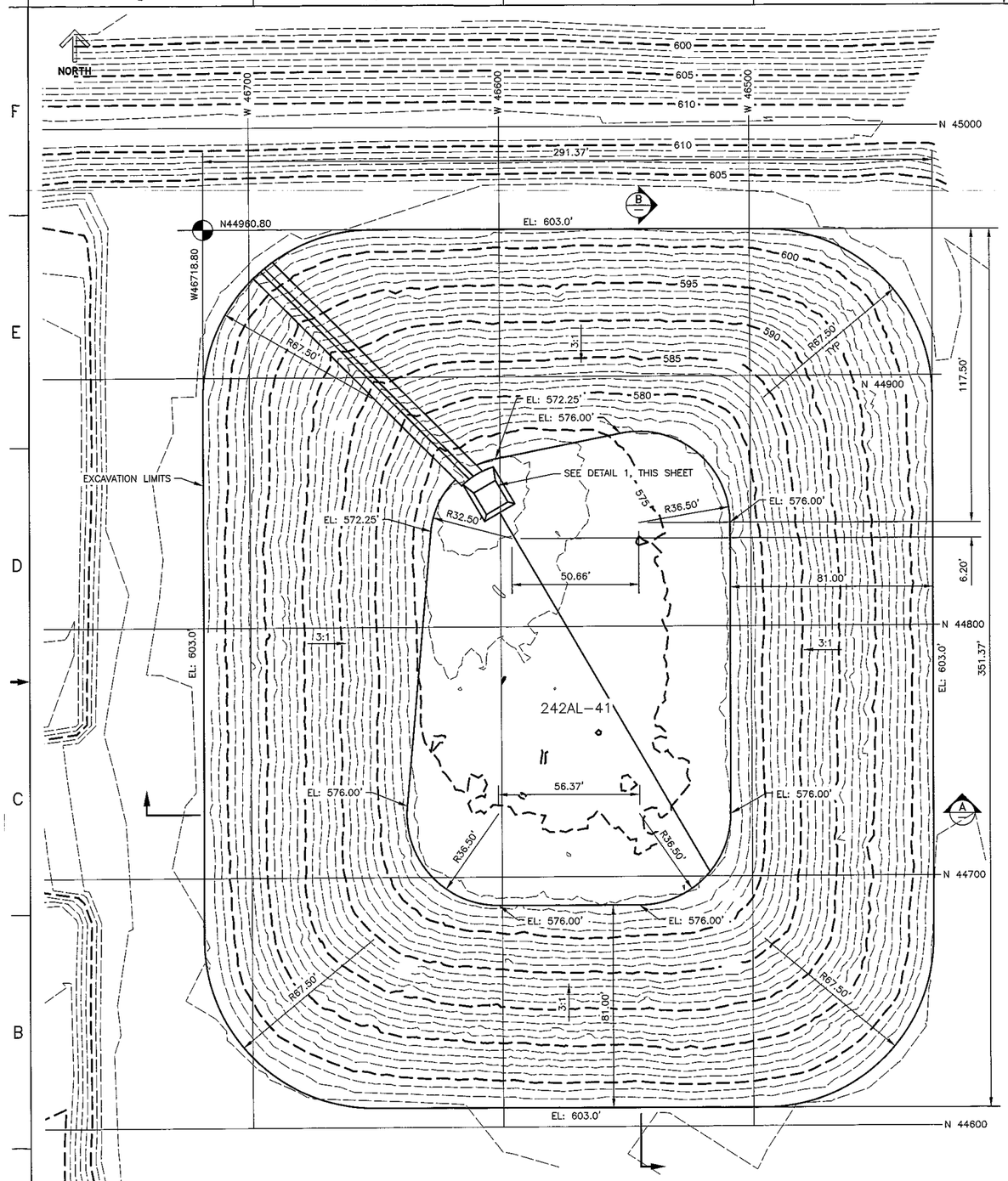

EXCAVATION PLAN
SCALE: 1"=20'

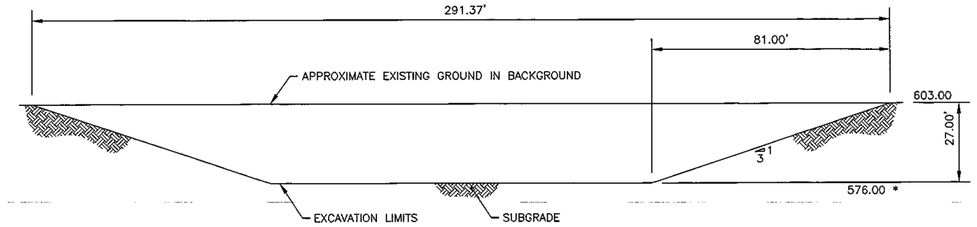

* NOTE: BOTTOM ELEVATION VARIES FOR DRAINAGE

A SECTION
SCALE: 1"=20'

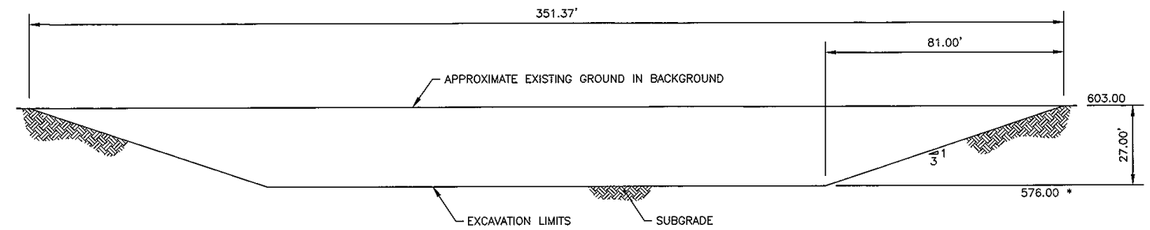

* NOTE: BOTTOM ELEVATION VARIES FOR DRAINAGE

B SECTION
SCALE: 1"=20'

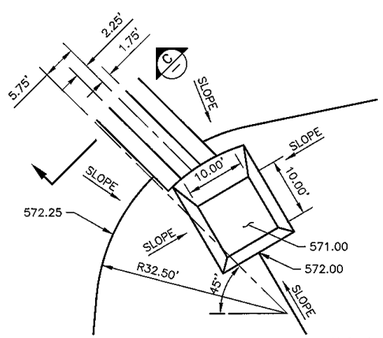

1 LEACHATE EXCAVATION
SCALE: 1"=10'

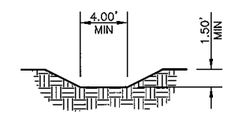

C SECTION
SCALE: 1"=5'

NOTES:

1. SEE H-2-838746-1 FOR ABBREVIATIONS, LEGEND, AND GENERAL NOTES.
2. ALL DISTANCES ARE IN FEET, EXCEPT AS SPECIFICALLY SHOWN.
3. OVERALL FILL = 320 CUBIC YARDS.
4. CONTRACTOR SHALL REMOVE EXISTING RIP-RAP AROMORING AS REQUIRED TO FACILITATE PLACEMENT OF BENTONITE.
5. THE CONTOURS ON THIS DRAWING REPRESENT AS FOUND CONDITIONS AND DESIGN ELEVATIONS SHOWN ARE SUBGRADE PRIOR TO SOIL/ BENTONITE MIX.
7. UNDERGROUND OR EMBEDDED UTILITIES ARE LOCATED WITHIN OR ADJACENT TO THE AREA.
8. THE LOCATION OR IDENTIFICATION OF SUCH UTILITIES HAS NOT BEEN VERIFIED. CONTRACTOR IS RESPONSIBLE FOR FIELD LOCATING AND IDENTIFYING UNDERGROUND OR EMBEDDED UTILITIES.
9. THE CONTRACTOR SHALL EXERCISE DUE CAUTION DURING ALL EXCAVATION WORK TO AVOID DAMAGE TO EXISTING SUBSURFACE FACILITIES AND TO PROTECT THE WORK CREW.
10. PLACE CRUSHED ROCK STABILIZATION PER TYPICAL DIKE CREST SECTION (H-2-838749-1) ON AREAS DISTURBED BY WORK UNLESS DIRECTED OTHERWISE BY COMPANY.

BRANDON E. ATKINSON, STATE OF WASHINGTON, 28592, REGISTERED PROFESSIONAL ENGINEER
5-20-2020

DATE: May 26,2020 HANFORD RELEASE

DWG NUMBER	TITLE
DRAWING TRACEABILITY LIST	

REF NUMBER	TITLE
H-2-838745	DRAWING LIST/TITLE SHEET
REFERENCES	

REV NO	DESCRIPTION
0	RELEASED PER EDT-882461
REVISIONS	

BLDG NO 242-AL 242AL-41

INDEX NO 0110

CAUTION: NOT COMPLETE WITHOUT CURRENT CHANGE DOCUMENTS FROM DATABASE

	NAME	DATE	COMPANY
DRAFTER	E P CULBERTSON	05/26/2020	WRPS
DRAFTING SUPVR	J R BYERS	05/26/2020	WRPS
TRANSLOCATING PROC REVIEWER	C C JOSLYN	05/26/2020	WRPS
DESIGN ENGINEER	P M DORSH	05/26/2020	WRPS
DESIGN AUTHORITY	N W WILSON	05/26/2020	WRPS

U.S. DEPARTMENT OF ENERGY
Office of River Protection

LERF BASIN 41
CIVIL
EXCAVATION PLAN

SIZE	DRAWING NUMBER	SHEET	REV
F	H-2-838748	1	00

SCALE SHOWN

29663

DOE_TB_F.DWG (SEPTEMBER 2018)

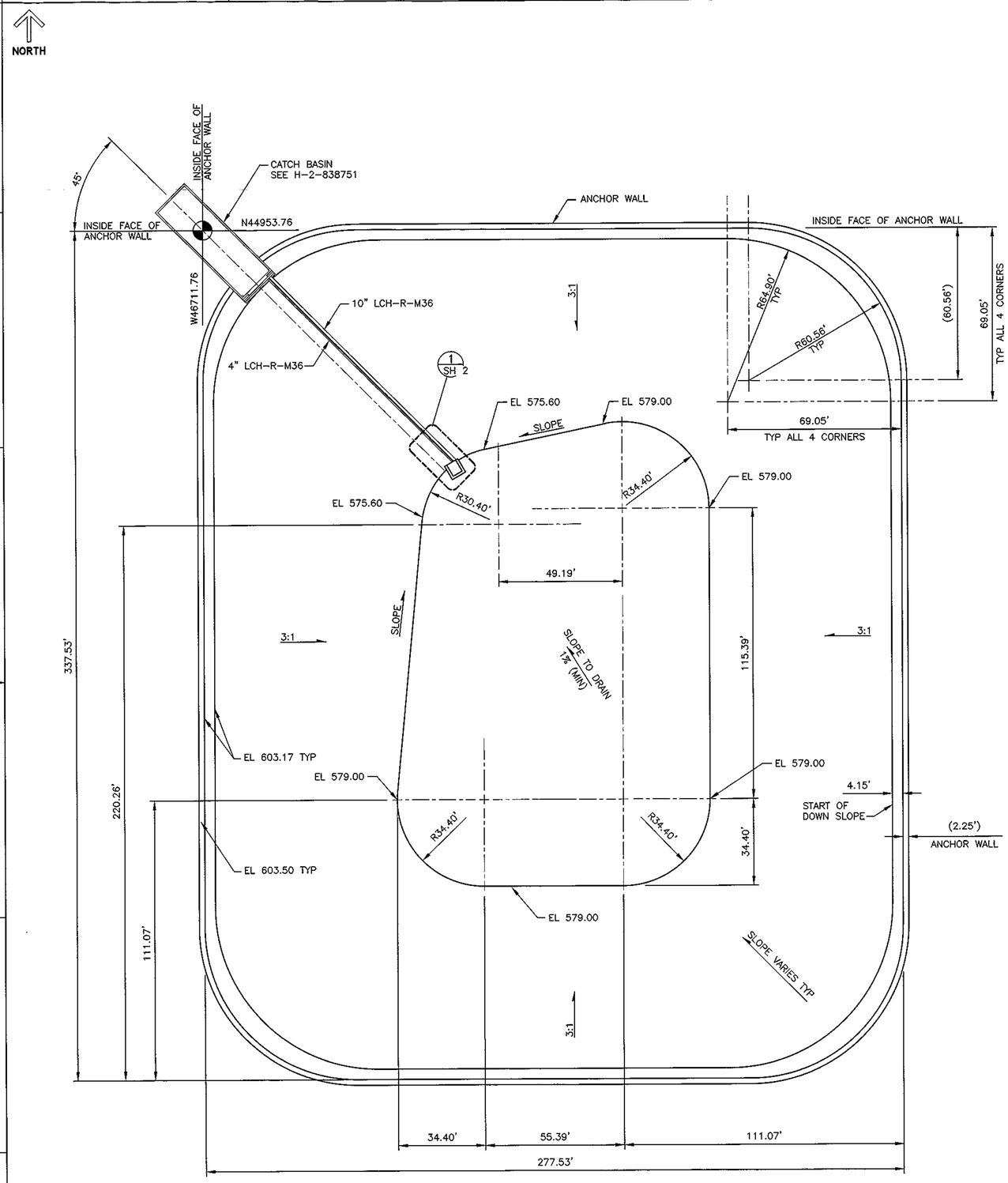

PLAN – TOP OF SECONDARY LINER

SCALE: 1"=20'

1" = 20' 0' 10' 20' 40' 60' SCALE FEET

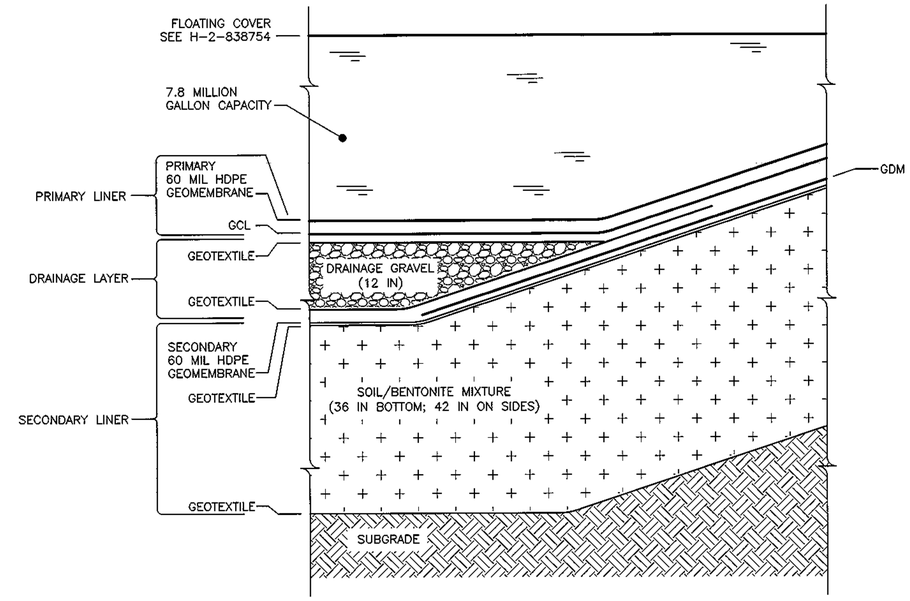

LINER SYSTEM SCHEMATIC

SCALE: 1"=1'-0"

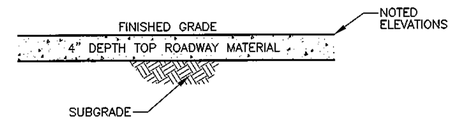

TYPICAL DIKE CREST SECTION

SCALE: NTS

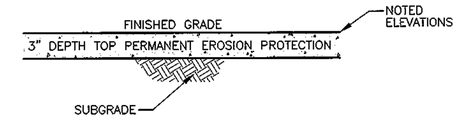

TYPICAL SLOPE EROSION PROTECTION SECTION

SCALE: NTS

NOTES:

1. SEE H-2-838746-1 FOR ABBREVIATIONS, LEGEND, AND GENERAL NOTES.
2. SLACK SHALL BE INCLUDED IN THE SECONDARY HDPE LINER TO ALLOW FOR SETTLEMENT AND THERMAL CONTRACTION AND DISTRIBUTED AS UNIFORMLY AS PRACTICABLE. MINIMUM SLACK SHALL BE DETERMINED ACCORDING TO THE FOLLOWING FORMULAS:
   A. $[(T+37.22) \times 190.21 \times (13\times10^{-5}) + 0.2]$ FEET ALONG THE BASIN FLOOR IN THE NORTH-SOUTH DIRECTION.
   B. $[(T+37.22) \times 130.21 \times (13\times10^{-5}) + 0.2]$ FEET ALONG THE BASIN FLOOR IN THE EAST-WEST DIRECTION.
   C. $[(T+37.22) \times 109.00 \times (13\times10^{-5}) + 0.2]$ FEET AROUND THE SLOPES IN THE DIRECTION OF THE DOWNSLOPE WHERE T IS THE TEMPERATURE OF THE HDPE LINER IN CELSIUS.

DAVID E. NELSON STATE OF WASHINGTON 28592 REGISTERED PROFESSIONAL ENGINEER 5-20-2020

DATE: May 26, 2020 HANFORD RELEASE

DWG NUMBER	TITLE
DRAWING TRACEABILITY LIST	

REF NUMBER	TITLE
H-2-838745	DRAWING LIST & TITLE SHEET
REFERENCES	
NEXT USED ON	

REV NO	DESCRIPTION
0	RELEASED PER EDT-882461
REVISIONS	

BLDG NO 242-AL 242AL-41

CAUTION: NOT COMPLETE WITHOUT CURRENT CHANGE DOCUMENTS FROM DATABASE

	NAME	DATE	COMPANY
DRAFTER	J R BYERS	05/05/2020	WRPS
DRAFTING SUPERVISOR	S A SNODGRASS	05/05/2020	WRPS
ENGINEERING PEER REVIEWER	C C JOSLYN	05/11/2020	WRPS
DESIGN ENGINEER	P M DORSH	05/12/2020	WRPS
DESIGN AUTHORITY	N W WILSON	05/01/2020	WRPS

U.S. DEPARTMENT OF ENERGY
Office of River Protection

LERF BASIN 41
CIVIL
BOTTOM LINER

0105 NO 0105

SIZE	DRAWING NUMBER	SHEET	REV
F	H-2-838749	1	00

SCALE SHOWN

29666

DOE_TB_F.DWG (SEPTEMBER 2018)

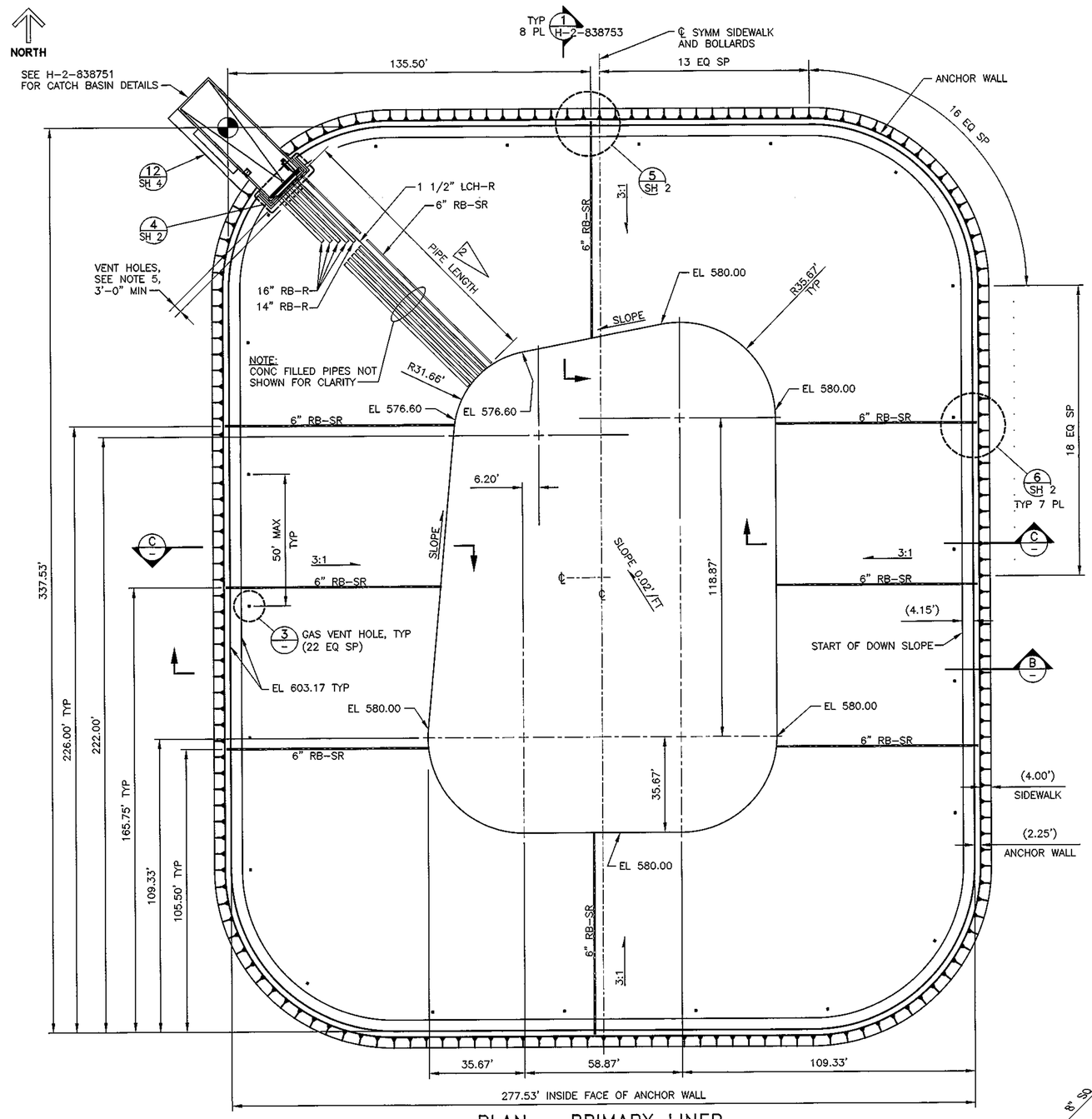

PLAN – PRIMARY LINER

SCALE: 1"=20'

1" = 20' 0' 10' 20' 40' 60' SCALE FEET

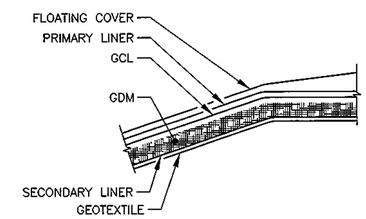

1 DETAIL

SCALE: NTS

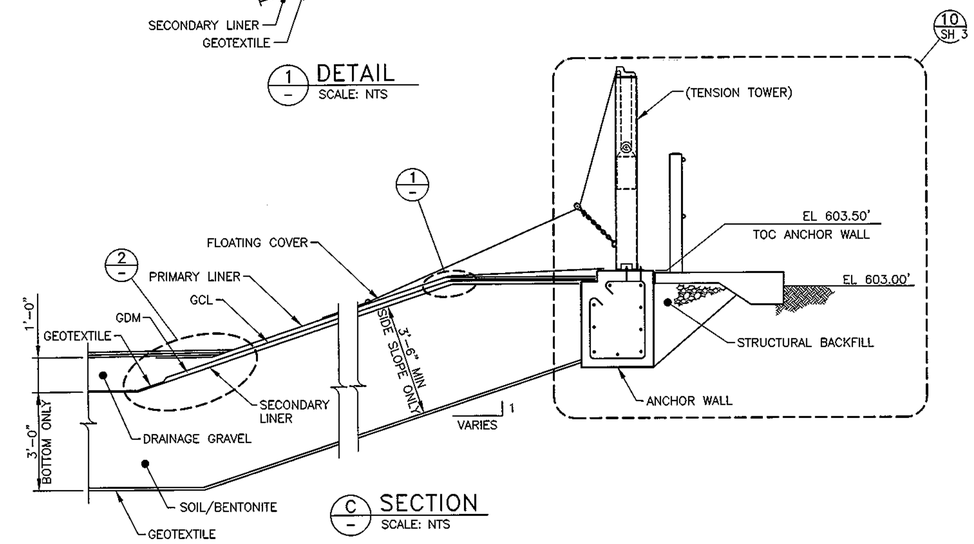

C SECTION

SCALE: NTS

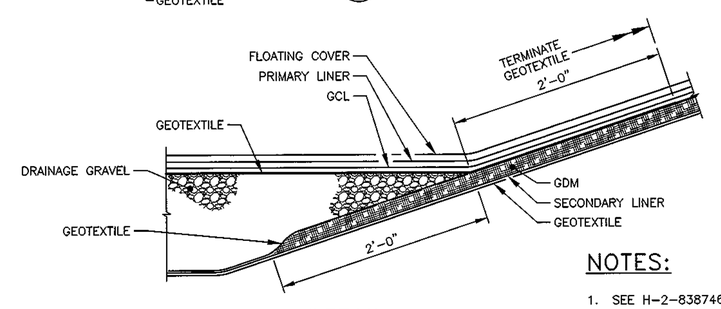

2 DETAIL

SCALE: NTS

NOTES:

1. SEE H-2-838746-1 FOR ABBREVIATIONS, LEGEND, AND GENERAL NOTES.

2. FORMULA FOR DETERMINING PIPE LENGTH. MEASURE PIPE TEMPERATURE AND LENGTH FOR SLOPE AT TIME OF CUTTING.
PIPE LENGTH = MEASURE LENGTH OF SLOPE X (1-(0.0012 X (160-PIPE TEMP °F))) AS-BUILT FINAL LENGTH AND AMBIENT TEMPERATURE.

3. WELD AND INSPECT STRUCTURAL WELDS IN ACCORDANCE WITH AWS D1.1. 2015, STATICALLY LOADED CRITERIA. ALL WELDS SHALL BE VT ON FINAL PASS UNLESS OTHERWISE SPECIFIED. WELD PROCEDURES AND QUALIFICATIONS PER ASME B&PV CODE, SECTION IX, 2017, ARE ACCEPTABLE.

4. SLACK SHALL BE INCLUDED IN THE PRIMARY HDPE LINER TO ALLOW FOR SETTLEMENT AND THERMAL CONTRACTION AND DISTRIBUTED AS UNIFORMLY AS PRACTICABLE. MINIMUM SLACK SHALL BE DETERMINED ACCORDING TO THE FOLLOWING FORMULAS:
   A. $[(T+37.22) \times 190.21 \times (13\times10^{-5}) + 0.2]$ FEET ALONG THE BASIN FLOOR IN THE NORTH-SOUTH DIRECTION.
   B. $[(T+37.22) \times 130.21 \times (13\times10^{-5}) + 0.2]$ FEET ALONG THE BASIN FLOOR IN THE EAST-WEST DIRECTION.
   C. $[(T+37.22) \times 109.00 \times (13\times10^{-5}) + 0.2]$ FEET AROUND THE SLOPES IN THE DIRECTION OF THE DOWNSLOPE WHERE T IS THE TEMPERATURE OF THE HDPE LINER IN CELSIUS.

5. DRILL 1/4" DIA VENT HOLE IN EACH PIPE, 6" RB-SR, 14" RB-R, AND 16" RB-R (VENT HOLE IN 2" DR-BR-R AND 1 1/2" LCH-R SHOWN ON PIPING DRAWINGS), 3'-0" MIN FROM CATCH BASIN FACE OF WALL.

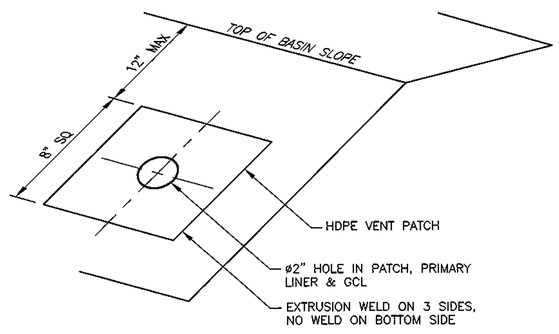

3 DETAIL-GAS VENT

SCALE: NTS

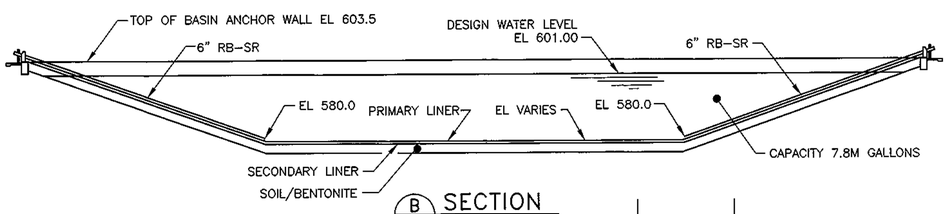

B SECTION

SCALE: 1"=20'

DATE: May 26, 2020

HANFORD RELEASE

DAVID E. NILSON, STATE OF WASHINGTON, 28592 REGISTERED PROFESSIONAL ENGINEER 5-20-2020

DWG NUMBER	TITLE
DRAWING TRACEABILITY LIST	

REF NUMBER	TITLE
H-2-838745	DRAWING LIST & TITLE SHEET
REFERENCES	

NEXT USED ON

REV NO	DESCRIPTION
0	RELEASED PER EDT-882461
REVISIONS	

DLDO NO 242-AL 242AL-41

DLDO NO 0105

CAUTION: NOT COMPLETE WITHOUT CURRENT CHANGE DOCUMENTS FROM DATABASE

	NAME	DATE	COMPANY
DRAWN BY	J R BYERS	04/30/2020	WRPS
CHECKED BY	S A SNODGRASS	04/30/2020	WRPS
ENGINEERING FIELD ENGINEER	C C JOSLYN	05/14/2020	WRPS
DESIGN ENGINEER	P M DORSH	05/20/2020	WRPS
DESIGN AUTHORITY	N W WILSON	05/01/2020	WRPS

U.S. DEPARTMENT OF ENERGY
Office of River Protection

LERF BASIN 41
CIVIL
TOP LINER

SIZE F | DRAWING NUMBER H-2-838750 | SHEET 1 | REV 00

SCALE SHOWN

29676

DOE_TB_F.DWG (SEPTEMBER 2019)

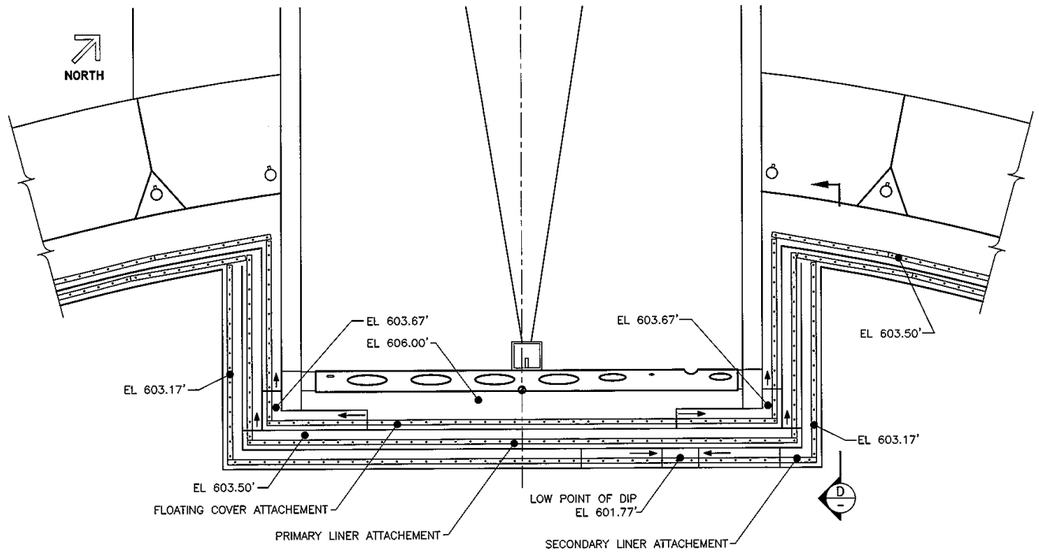

4 SH 1 DETAIL–LINER ANCHORAGE AT CATCH BASIN WALL
SCALE: 1/2"=1'–0"

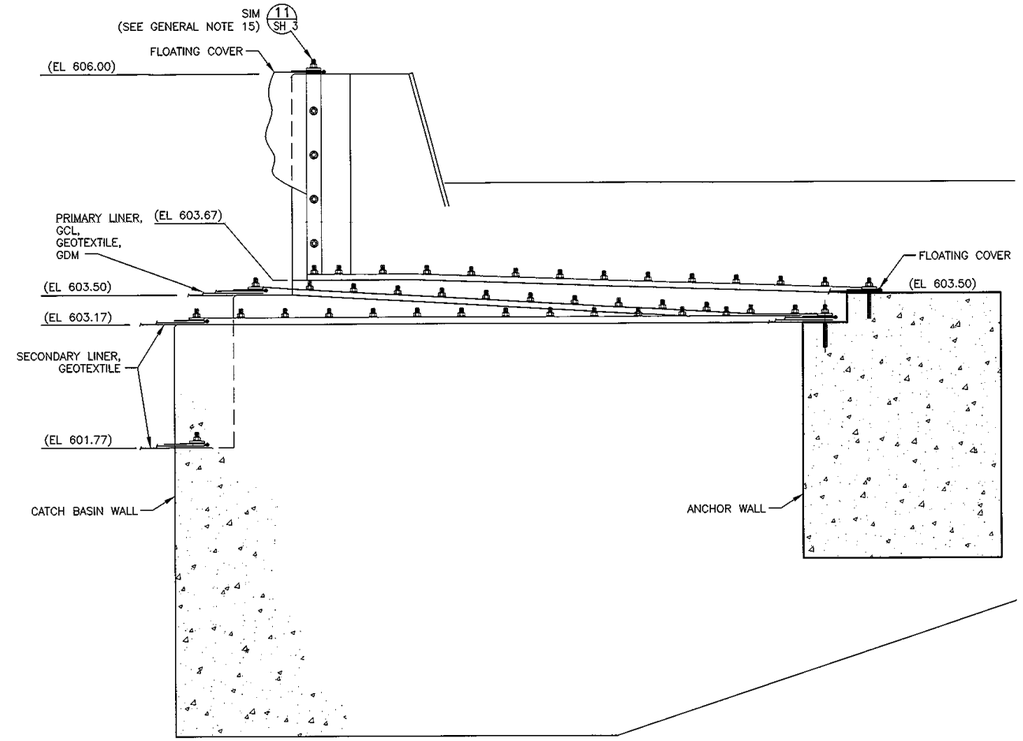

D – SECTION
SCALE: 1 1/2"=1'–0"

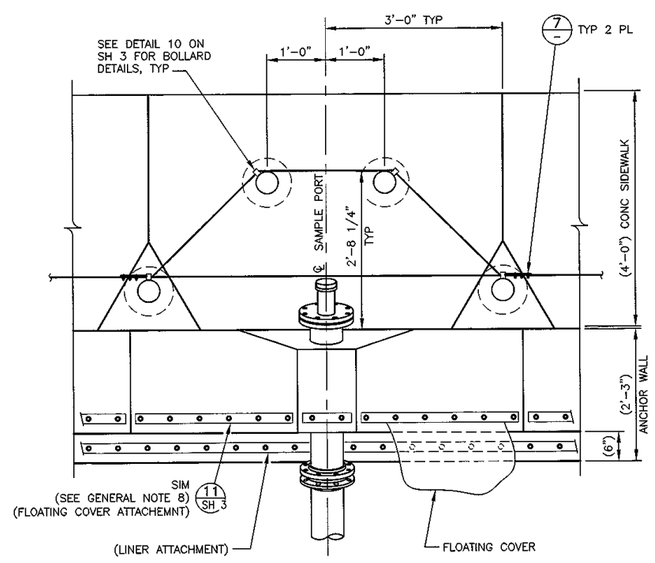

5 SH 1 DETAIL–NORTH SAMPLE PORT
SCALE: 1"=1'–0"

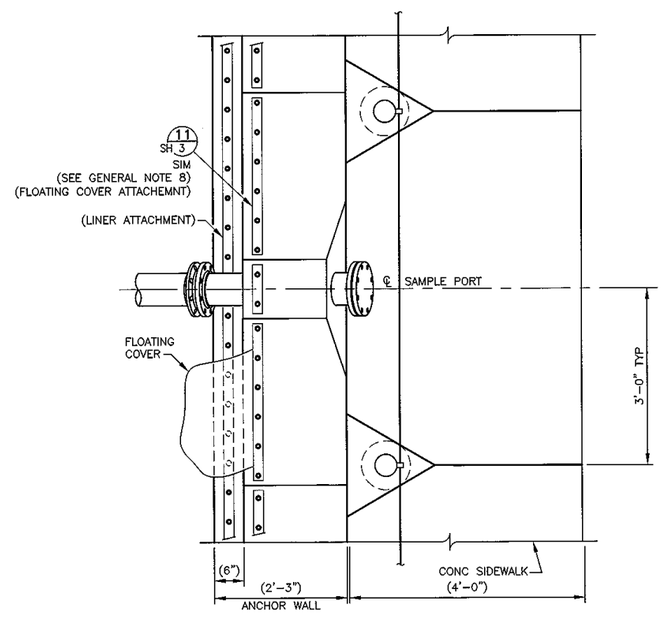

6 SH 1 DETAIL–SAMPLE PORTS
SCALE: 1"=1'–0"

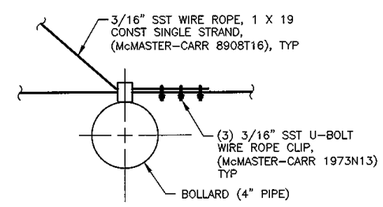

7 – DETAIL
SCALE: 3"=1'–0"

DATE: May 26,2020 HANFORD RELEASE

5-20-2020

DWG NUMBER	TITLE
DRAWING TRACEABILITY LIST	

REF NUMBER	TITLE
REFERENCES	
NEXT USED ON	

REV NO	DESCRIPTION
0	RELEASED PER EDT–882461
REVISIONS	

BLDG NO 242–AL 242AL–41

DWG NO 0105

CAUTION: NOT COMPLETE WITHOUT CURRENT CHANGE DOCUMENTS FROM DATABASE

	NAME	DATE	COMPANY
DRAFTER	J F BYERS	10/31/2005	WRPS
MANUFACTURING ENGINEER	S A SNODGRASS	10/31/2005	WRPS
ENGINEERING TECH REVIEWER	C C JOSLIN	10/31/2005	WRPS
DESIGN ENGINEER	F M DORSH	10/31/2005	WRPS
DESIGN AUTHORITY	N W WILSON	10/31/2005	WRPS

U.S. DEPARTMENT OF ENERGY
Office of River Protection

LERF BASIN 41
CIVIL
TOP LINER DETAILS

SIZE F | DRAWING NUMBER H–2–838750 | SHEET 2 | REV 00

SCALE SHOWN

29672

DOE_TB_F.DWG (SEPTEMBER 2019)

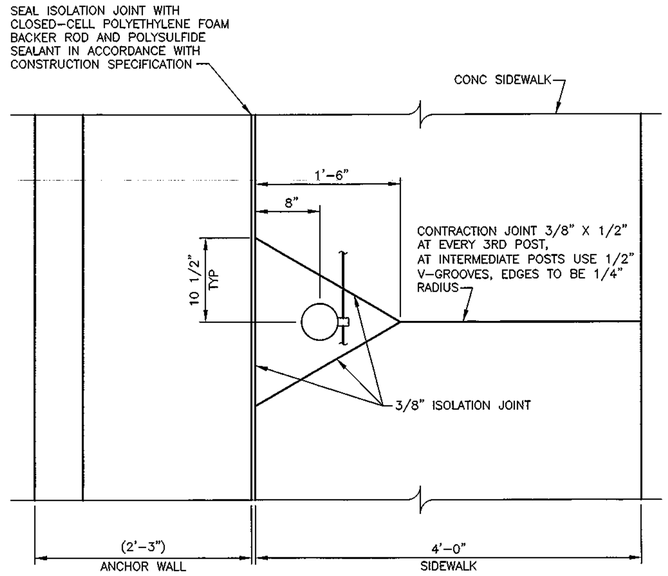

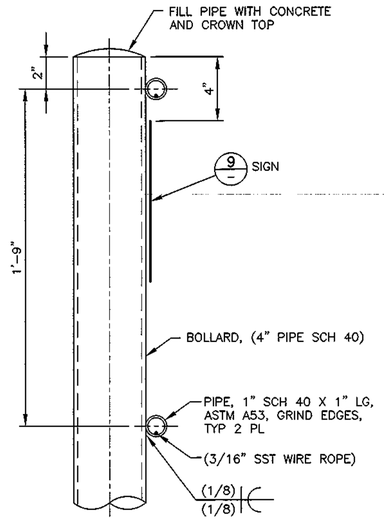

8 DETAIL
SCALE: 3"=1'-0"

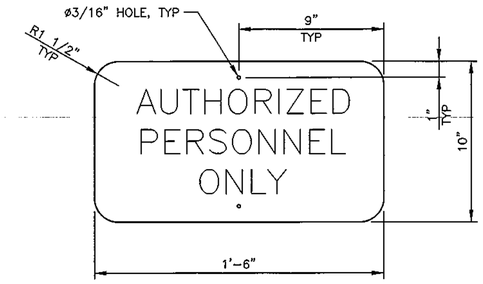

9 DETAIL-SIGN
SCALE: 3"=1'-0"

NOTES:

1. MATERIAL: ALUMINUM, 1/8" MINIMUM THICKNESS.
2. LETTERS IN ACCORDANCE WITH USDOT STANDARD HIGHWAY SIGNS MANUAL, STANDARD ALPHABET, ALL CAPS, CENTER ON SIGN, 1 1/2" CHARACTER HEIGHT.
3. ATTACH TO GUARD POSTS WITH NO 8-32 ZINC-PLATED STEEL THREAD CUTTING SCREWS (OR BOLTS) AND WASHER.
4. PLACE ONE SIGN ON EVERY 8TH GUARD POST BEGINNING APPROX 12FT E SIDE OF CENTER LINE OF CATCH BASIN FOR A TOTAL OF 24 SIGNS PER BASIN.

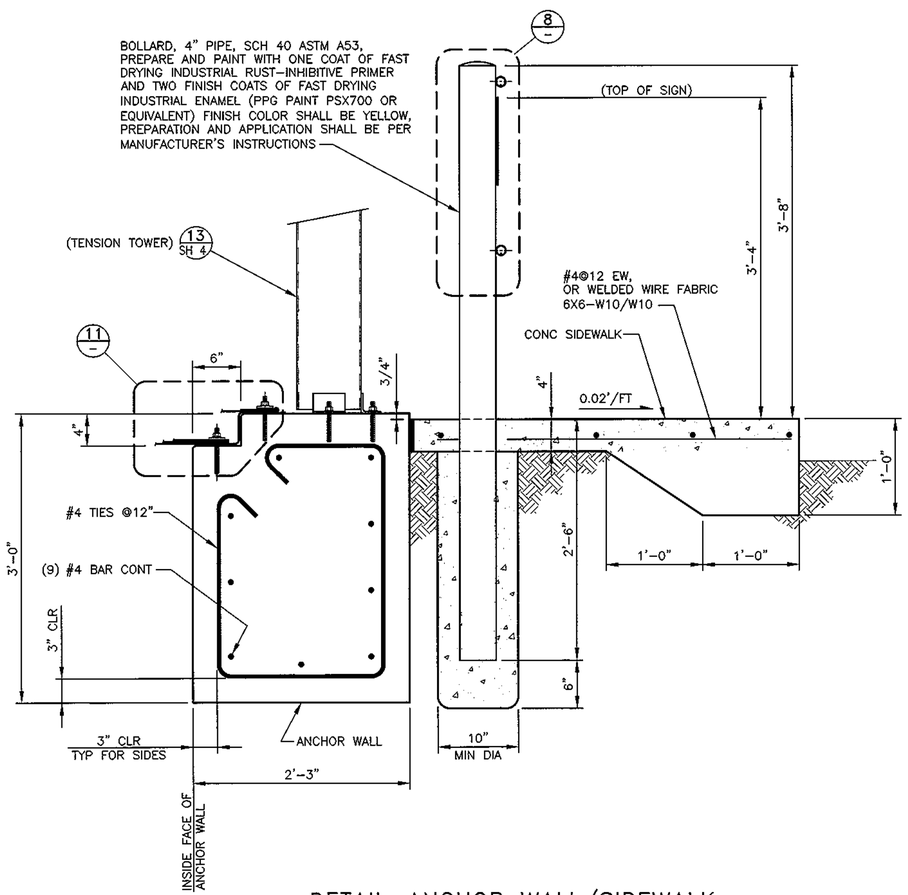

10 SH 1 DETAIL-ANCHOR WALL/SIDEWALK
SCALE: 1 1/2"=1'-0"

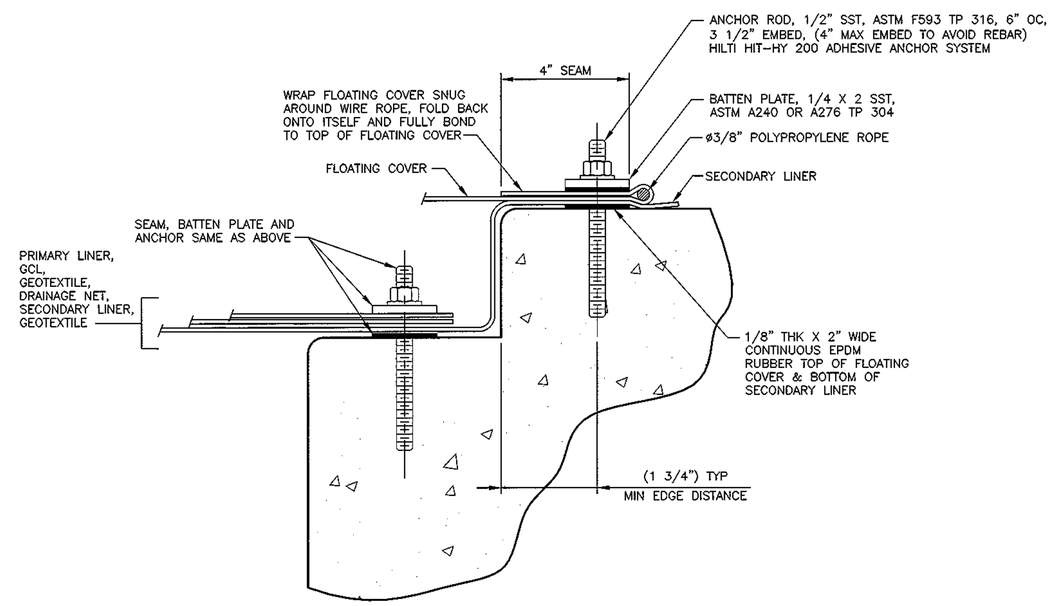

11 DETAIL
SCALE: 6"=1'-0"

DATE: May 26, 2020 HANFORD RELEASE

DWG NUMBER	TITLE	REF NUMBER	TITLE
DRAWING TRACEABILITY LIST		NEXT USED ON	REFERENCES

REV NO	DESCRIPTION
0	RELEASED PER EDT-882461

REVISIONS

BLDG NO 242-AL 242AL-41

0105 NO 0105

CAUTION: NOT COMPLETE WITHOUT CURRENT CHANGE DOCUMENTS FROM DATABASE

	NAME	DATE	COMPANY
DRAWER	J R BYERS	04/01/2020	WRPS
CHIEF ROAD SUPERVISOR	S A SNODGRASS	04/01/2020	WRPS
ENGINEERING PEER REVIEWER	C C JOSLYN	04/14/2020	WRPS
DESIGN ENGINEER	P M DORSH	04/01/2020	WRPS
DESIGN AUTHORITY	N W WILSON	04/01/2020	WRPS

U.S. DEPARTMENT OF ENERGY
Office of River Protection

LERF BASIN 41
CIVIL
TOP LINER DETAILS

SIZE F | DRAWING NUMBER H-2-838750 | SHEET 3 | REV 00

SCALE SHOWN

29671

DOE_TB_F.DWG (SEPTEMBER 2019)

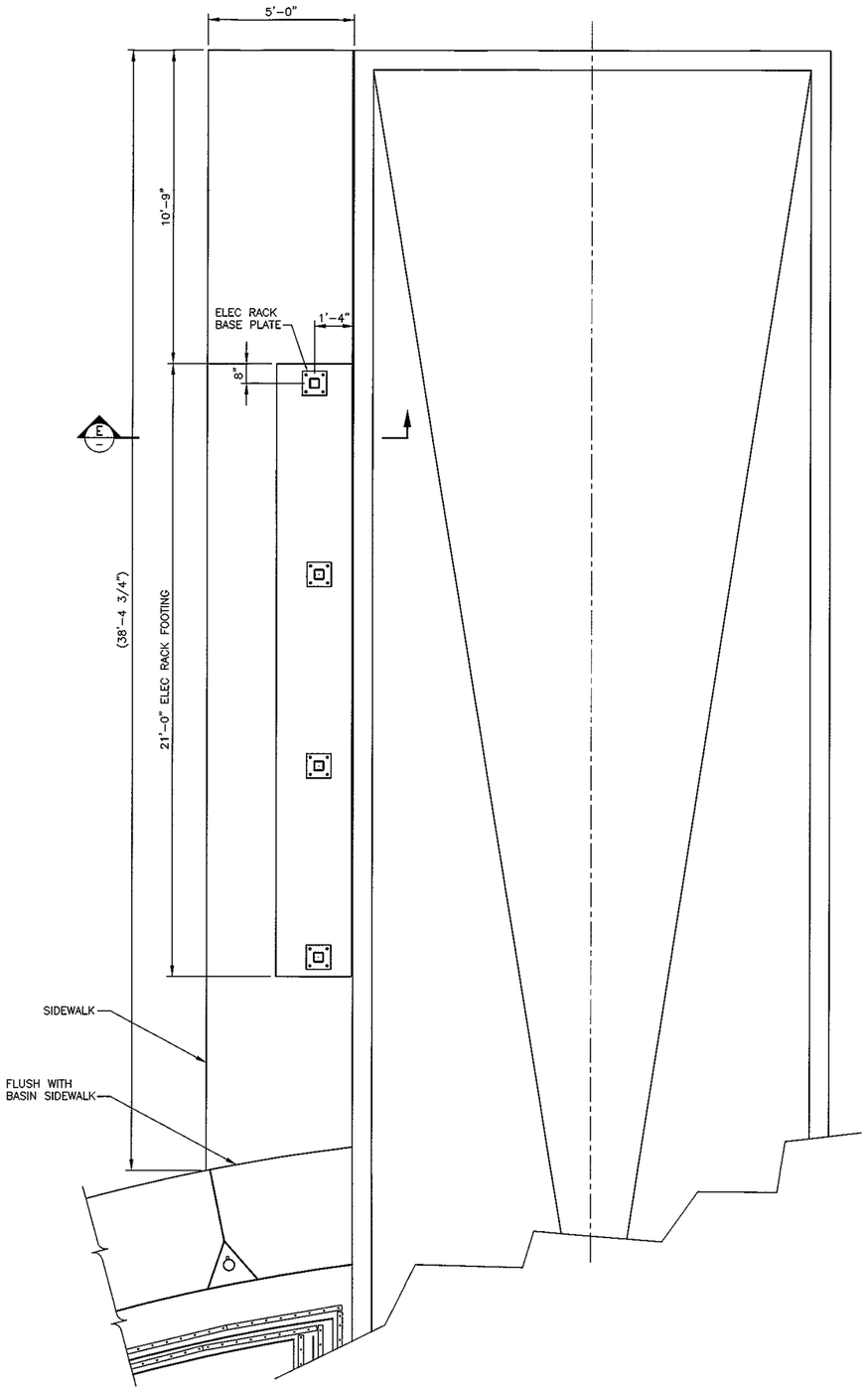

12 SH 1 DETAIL-SIDEWALK/RACK FOOTING AT CATCH BASIN
SCALE: 1/2"=1'-0"

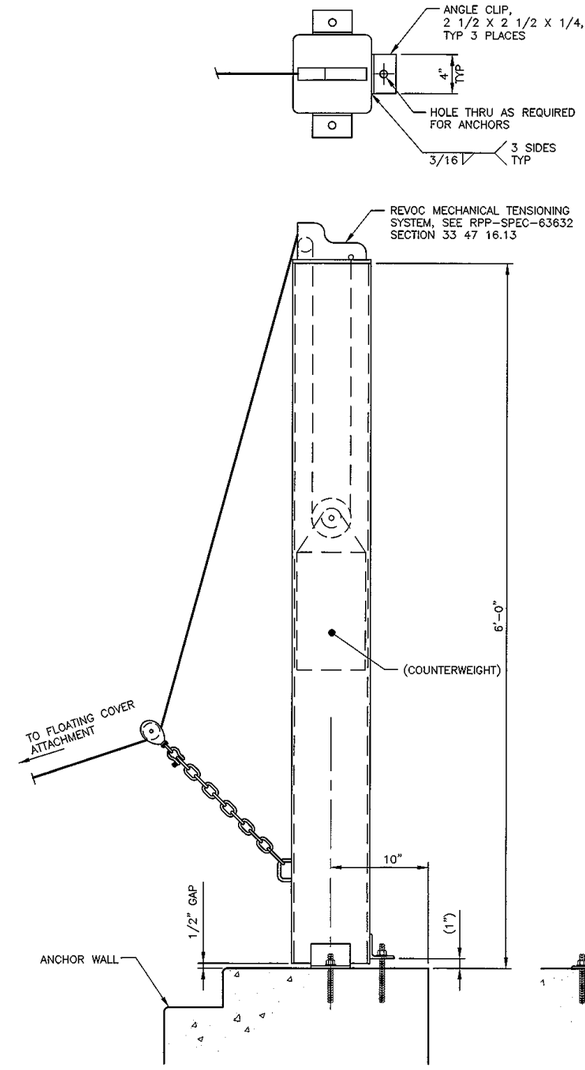

13 SH 3 DETAIL-TENSION TOWER
SCALE: NTS

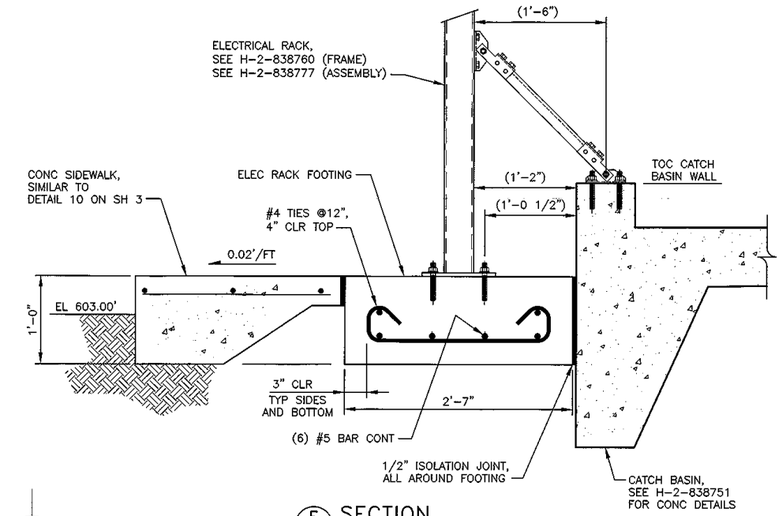

E SECTION
SCALE: 1 1/2"=1'-0"

DATE: May 26,2020 HANFORD RELEASE

DWG NUMBER	TITLE
DRAWING TRACEABILITY LIST	

REF NUMBER	TITLE
REFERENCES	
NEXT USED ON	

REV NO	DESCRIPTION
0	RELEASED PER EDT-882461
REVISIONS	

BLDG NO 242-AL 242AL-41

0105 NO 0105

CAUTION: NOT COMPLETE WITHOUT CURRENT CHANGE DOCUMENTS FROM DATABASE

	NAME	DATE	COMPANY
DRAWN BY	J. R. BYERS	04/01/2020	WSPS
DRAFTING SUPERVISOR	S. A. SNODGRASS	04/01/2020	WSPS
ENGINEERING DATA REVIEWER	C. C. JOSLYN	04/06/2020	WSPS
DESIGN ENGINEER	P. M. DORSH	04/07/2020	WSPS
DESIGN AUTHORITY	N. W. WILSON	04/08/2020	WSPS

U.S. DEPARTMENT OF ENERGY
Office of River Protection

LERF BASIN 41
CIVIL
TOP LINER DETAILS

SIZE	DRAWING NUMBER	SHEET	REV
F	H-2-838750	4	00

SCALE SHOWN

29674

DOE_TB_F.DWG (SEPTEMBER 2019)

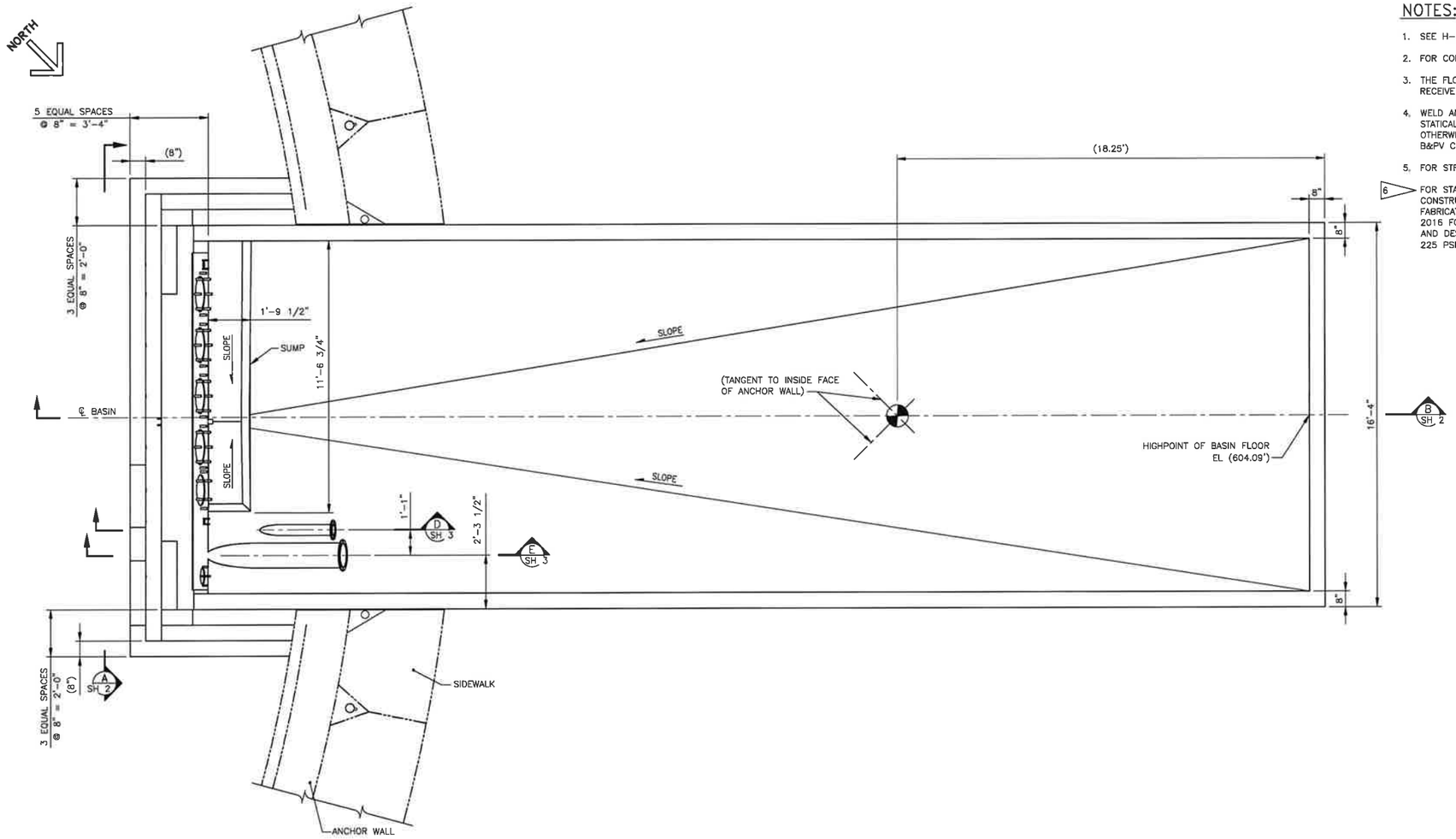

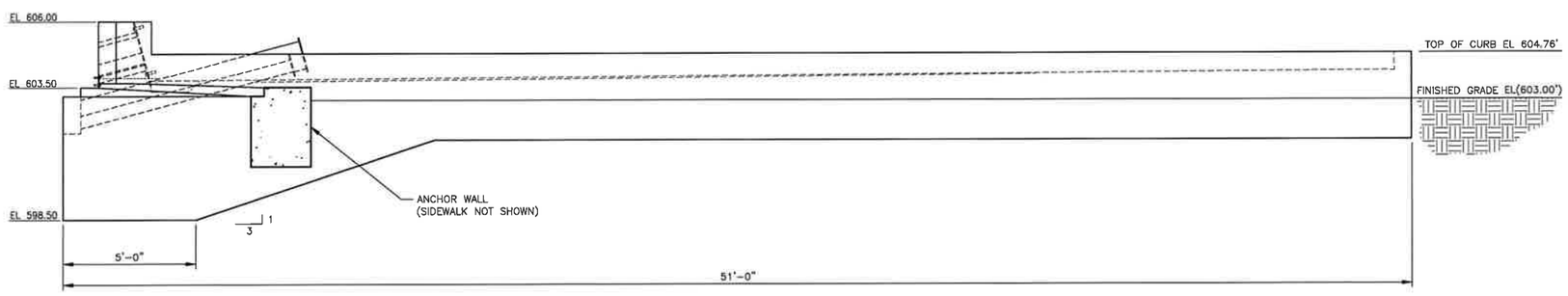

NOTES:

1. SEE H-2-838746-1 FOR ABBREVIATIONS, LEGEND, AND GENERAL NOTES.
2. FOR CONCRETE AND REBAR REQUIREMENTS SEE RPP-SPEC-63632.
3. THE FLOOR, INSIDE EDGE AND TOP OF CURB OF THE CATCH BASIN SHALL RECEIVE AN SF-3.0 FINISH.
4. WELD AND INSPECT STRUCTURAL WELDS IN ACCORDANCE WITH AWS D1.1. 2015, STATICALLY LOADED CRITERIA. ALL WELDS SHALL BE VT ON FINAL PASS UNLESS OTHERWISE SPECIFIED. WELD PROCEDURES AND QUALIFICATIONS PER ASME B&PV CODE, SECTION IX, 2017, ARE ACCEPTABLE.
5. FOR STRUCTURAL ANALYSIS SEE RPP-CALC-63664.
6. FOR STAINLESS STEEL PIPE USE CLASS M-10 PIPING CODE, SEE CONSTRUCTION SPECIFICATION RPP-SPEC-63632 SECTION 40 40 00. FABRICATE, WELD, INSPECT AND TEST PIPING IN ACCORDANCE WITH ASME B31.3, 2016 FOR CATEGORY NORMAL FLUID SERVICE. DESIGN PRESSURE IS 150 PSIG, AND DESIGN TEMPERATURE IS 150°F. HYDROSTATIC LEAK PRESSURE TEST TO 225 PSIG (-0/+25 PSIG). FABRICATION TEMPERATURE IS 50°F TO 120°F.

RONALD W. DAVIDSON STATE OF WASHINGTON 24180 REGISTERED PROFESSIONAL ENGINEER

5/21/2020

DATE: May 20, 2020 HANFORD RELEASE

CATCH BASIN

SCALE: 1/2"=1'-0"

DWG NUMBER	TITLE
	DRAWING TRACEABILITY LIST

REF NUMBER	TITLE
H-2-838745	DRAWING LIST/TITLE SHEET
NEXT USED ON END ITEM	REFERENCES

REV NO	DESCRIPTION
0	RELEASED PER EDT-882462
	REVISIONS

BLDG NO 242-AL 242AL-41

INDEX NO 0401

CAUTION: NOT COMPLETE WITHOUT CURRENT CHANGE DOCUMENTS FROM DATABASE

	NAME	DATE	COMPANY
DRAFTER	J. R. BYERS		
SENIOR DRAFTER	V. F. SALYERS		
CONTRACTING PLAN REVIEWER	C. C. JOSLYN		
DESIGN ENGINEER	R. W. DAVIDSON		
DESIGN AUTHORITY	N. W. WILSON		

U.S. DEPARTMENT OF ENERGY
Office of River Protection

LERF BASIN 41
STRUCTURAL
CATCH BASIN

SIZE F | DRAWING NUMBER H-2-838751 | SHEET 1 | REV 00

SCALE SHOWN

29751

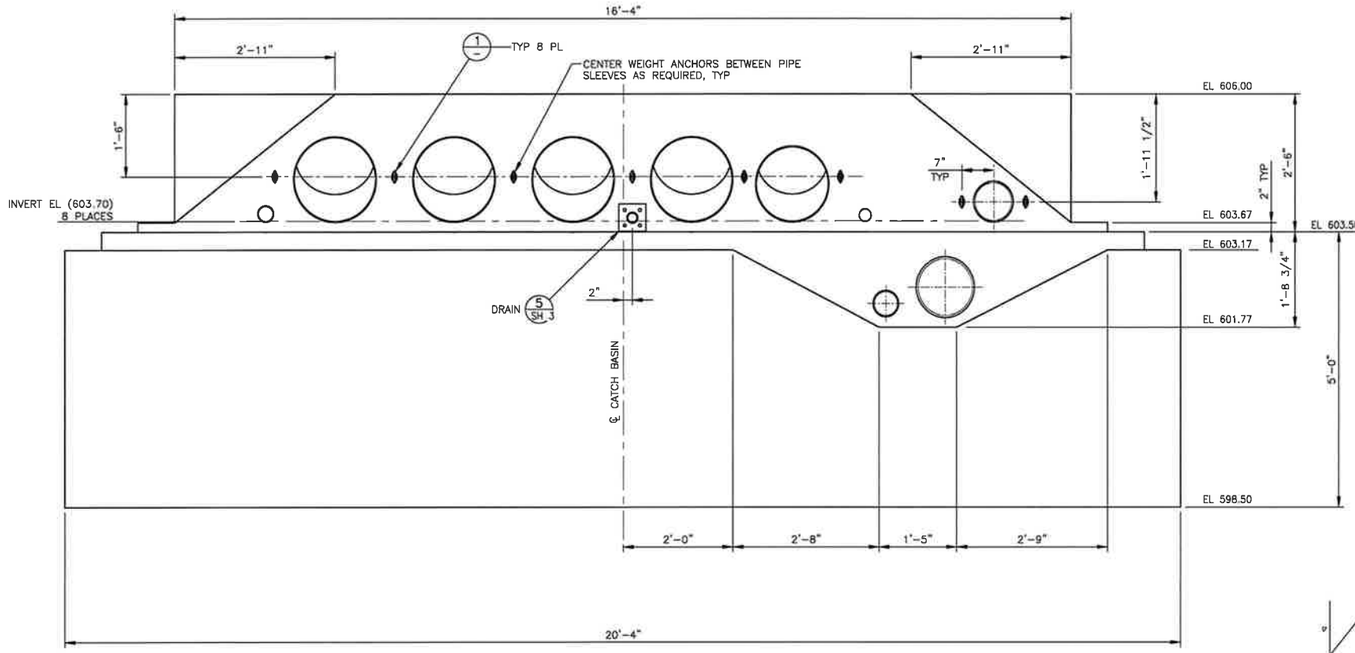

A VIEW
SCALE: 1"=1'-0"

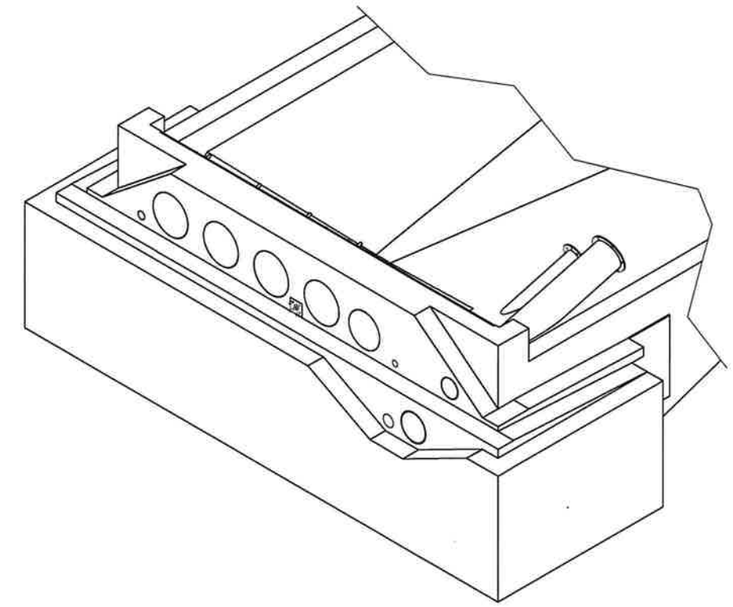

ISO VIEW OF CATCH BASIN WALL
SCALE: NTS

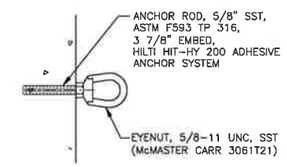

1 DETAIL-WEIGHT ANCHOR
SCALE: 3"=1'-0"

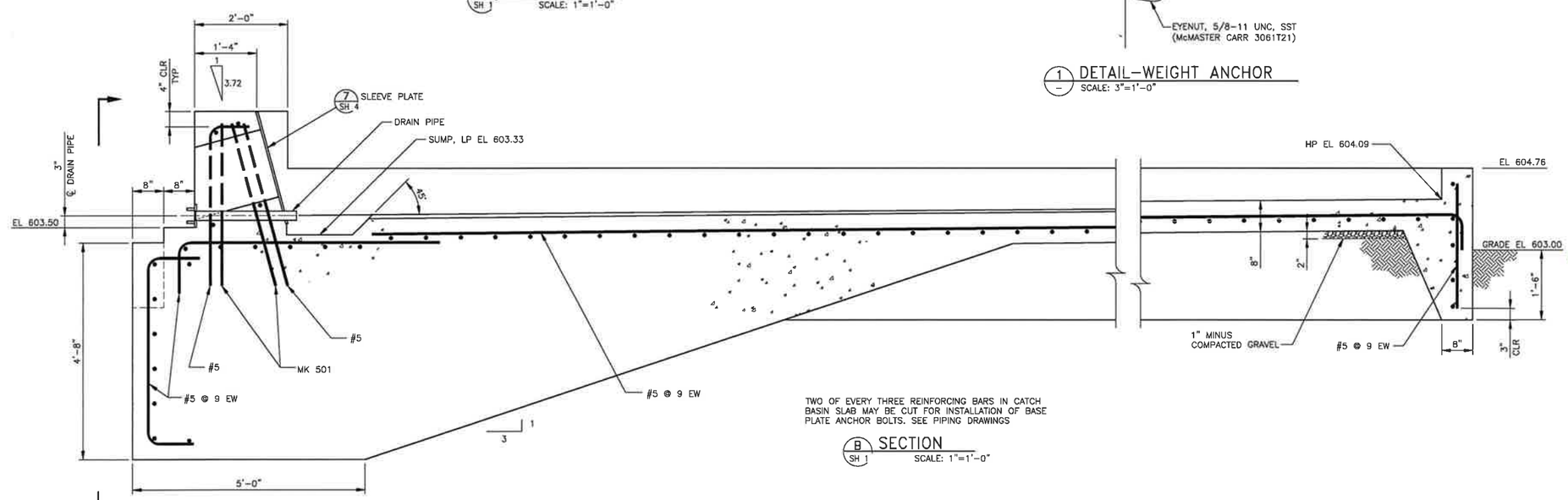

TWO OF EVERY THREE REINFORCING BARS IN CATCH BASIN SLAB MAY BE CUT FOR INSTALLATION OF BASE PLATE ANCHOR BOLTS. SEE PIPING DRAWINGS

B SECTION
SCALE: 1"=1'-0"

RONALD W. DAVIDSON
STATE OF WASHINGTON
24180
REGISTERED PROFESSIONAL ENGINEER
5/21/2020

DATE:
May 20, 2020
HANFORD RELEASE

DWG NUMBER	TITLE
H-2-838745	DRAWING LIST/TITLE SHEET

DRAWING TRACEABILITY LIST

REF NUMBER	TITLE
NEXT USED ON END ITEM	REFERENCES

REV NO	DESCRIPTION
0	RELEASED PER EDT-882462

REVISIONS

BLDG NO 242-AL 242AL-41
WBS NO 0401

CAUTION: NOT COMPLETE WITHOUT CURRENT CHANGE DOCUMENTS FROM DATABASE

	NAME	DATE	COMPANY
DRAWER	J R RYERS	10/15/99	ARES
DRAWING CHECKER	V F SALTERS	10/15/99	ARES
ENGINEERING PEER REVIEWER	C C JOSLYN	10/15/99	ARES
DESIGN ENGINEER	R W DAVIDSON	10/15/99	ARES
DESIGN AUTHORITY	N W WILSON	10/15/99	SWPS

U.S. DEPARTMENT OF ENERGY
Office of River Protection

LERF BASIN 41
STRUCTURAL
CATCH BASIN DETAILS

SIZE	DRAWING NUMBER	SHEET	REV
F	H-2-838751	2	00

SCALE SHOWN

27538 DOC_TBLF.DWG (SEPTEMBER 2001)

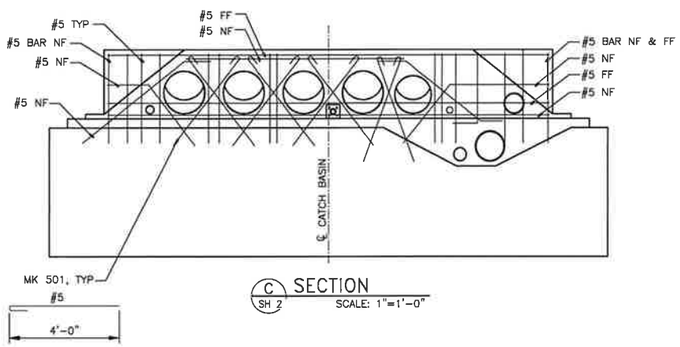

C SH 2 SECTION
SCALE: 1"=1'-0"

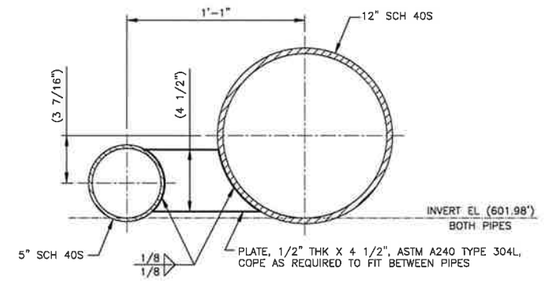

2 – DETAIL-SLEEVE SUPPORT
SCALE: 3"=1'-0"

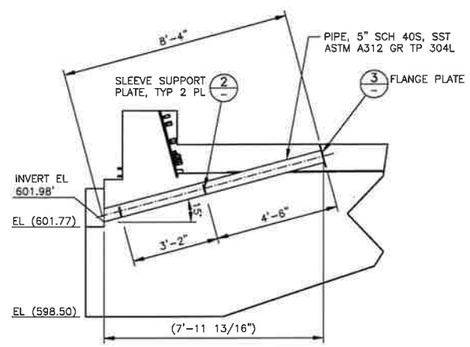

D SH 1 SECTION
SCALE: 1/2"=1'-0"

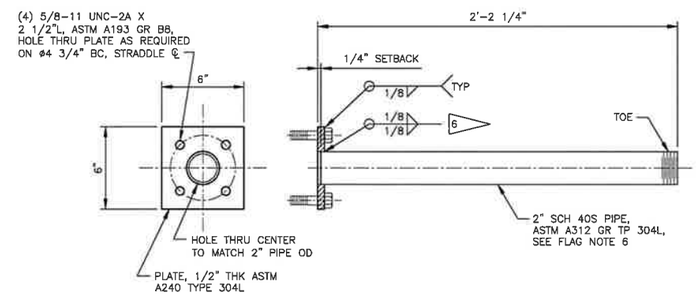

5 SH 2 DETAIL-DRAIN PIPE
SCALE: 3"=1'-0"

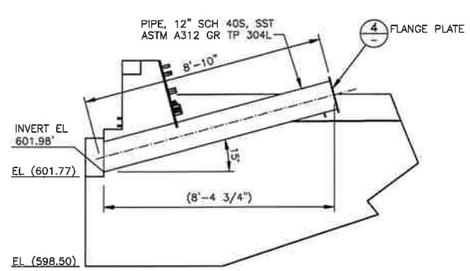

E SH 1 SECTION
SCALE: 1/2"=1'-0"

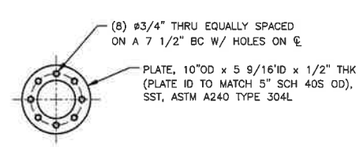

3 – FLANGE PLATE-10"
SCALE: 1 1/2"=1'-0"

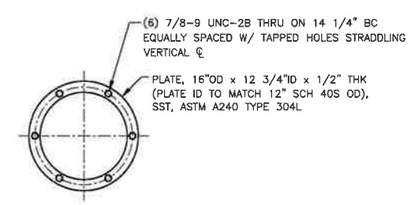

4 – FLANGE PLATE-16"
SCALE: 1 1/2"=1'-0"

DATE:
May 20, 2020
HANFORD RELEASE

DWG NUMBER	TITLE
DRAWING TRACEABILITY LIST	

REF NUMBER	TITLE
H-2-838745	DRAWING LIST/TITLE SHEET
REFERENCES	
NEXT USED ON SH 2	

REV	DESCRIPTION
0	RELEASED PER EDT-882462
REVISIONS	

BLDG NO 242-AL 242AL-41
ROOT NO 0401

CAUTION: NOT COMPLETE WITHOUT CURRENT CHANGE DOCUMENTS FROM DATABASE

	NAME	DATE / COMPANY
DRAWER	J A RYERS	05/19/2020 ARCS
DRAWING CHECKER	V F SALYERS	05/19/2020 ARCS
CONCERNING PLATE REVIEWER	C C JOSLYN	05/20/2020 ARCS
DEPUTY MANAGER	R W DAVIDSON	05/19/2020 ARCS
DESIGN AUTHORITY	N W WILSON	05/20/2020 WRPS

U.S. DEPARTMENT OF ENERGY
Office of River Protection

LERF BASIN 41
STRUCTURAL
CATCH BASIN DETAILS

SIZE F | DRAWING NUMBER H-2-838751 | SHEET 3 | REV 00
SCALE SHOWN

29350

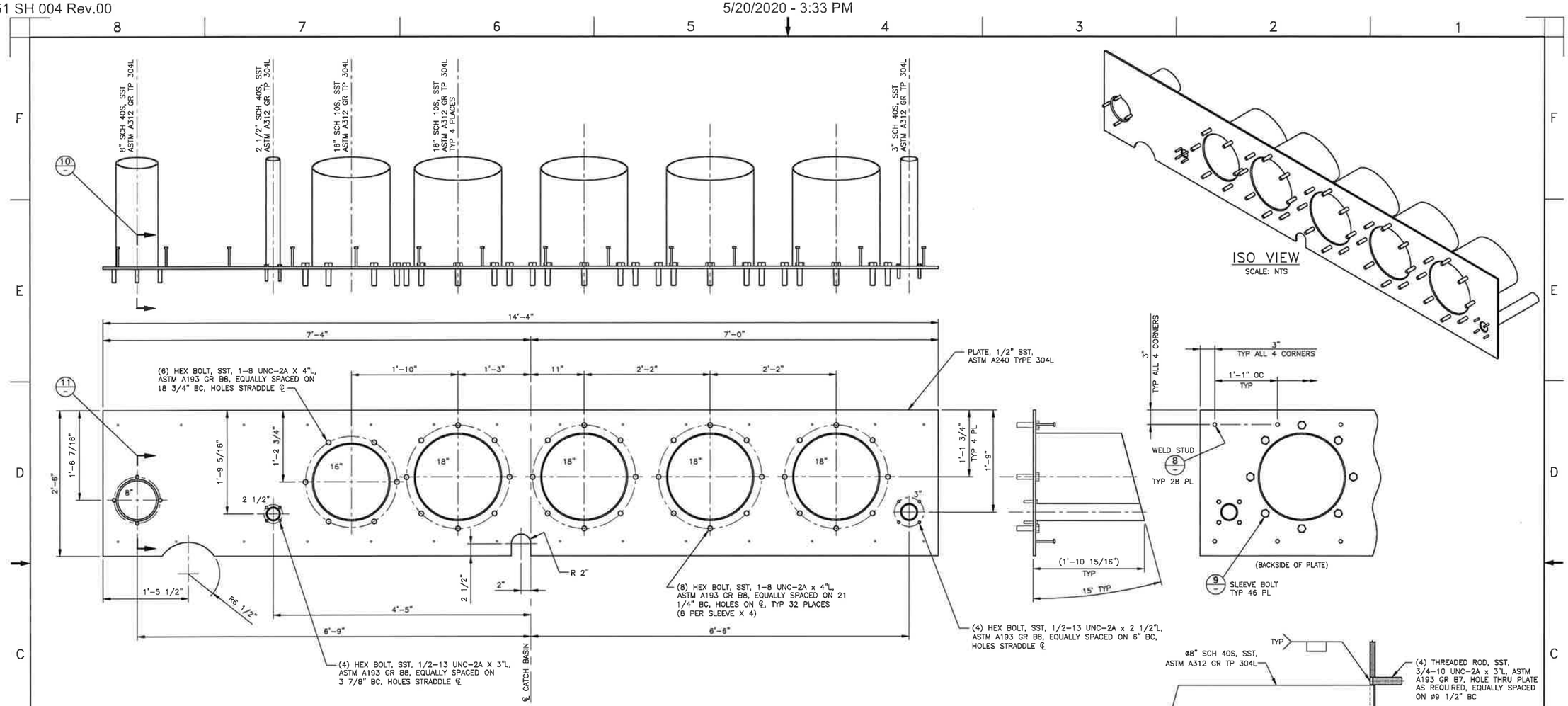

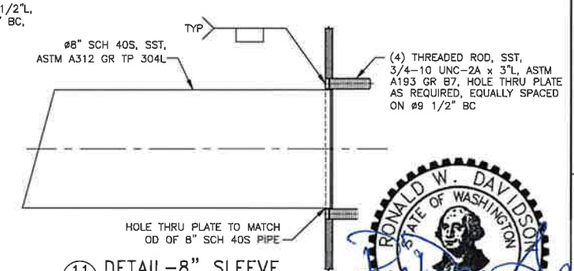

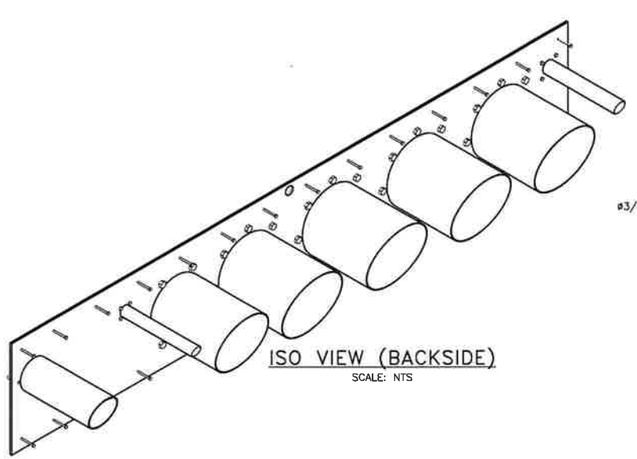

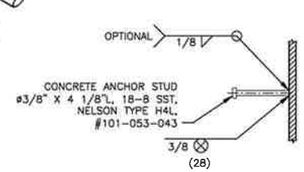

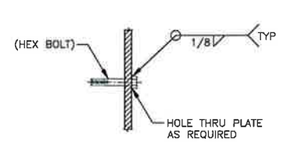

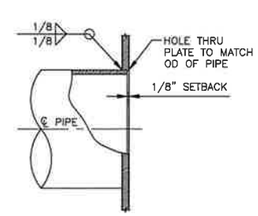

RONALD W. DAVIDSON STATE OF WASHINGTON 24304 REGISTERED PROFESSIONAL ENGINEER
5/21/2020

DATE: May 20, 2020 HANFORD RELEASE

DWG NUMBER	TITLE
DRAWING TRACEABILITY LIST	

REF NUMBER	TITLE
H-2-838745	DRAWING LIST/TITLE SHEET
NEXT USED ON SH 1	REFERENCES

REV	DESCRIPTION
0	RELEASED PER EDT-882462
	REVISIONS

BLDG NO 242-AL 242AL-41
INDEX NO 0401

CAUTION: NOT COMPLETE WITHOUT CURRENT CHANGE DOCUMENTS FROM DATABASE

	NAME	DATE	COMPANY
DRAWN	R BYERS	05/20/2020	ARES
DESIGN CHECKER	V F SALYERS	05/20/2020	ARES
ENGINEERING CHIEF REVIEWER	C C JOSLYN	05/20/2020	WRPS
DESIGN ENGINEER	R W DAVIDSON	05/20/2020	ARES
DESIGN AUTHORITY	N W WILSON	05/20/2020	WRPS

U.S. DEPARTMENT OF ENERGY
Office of River Protection

LERF BASIN 41
STRUCTURAL
CATCH BASIN DETAILS

SIZE F | DRAWING NUMBER H-2-838751 | SHEET 4 | REV 00
SCALE SHOWN

29752

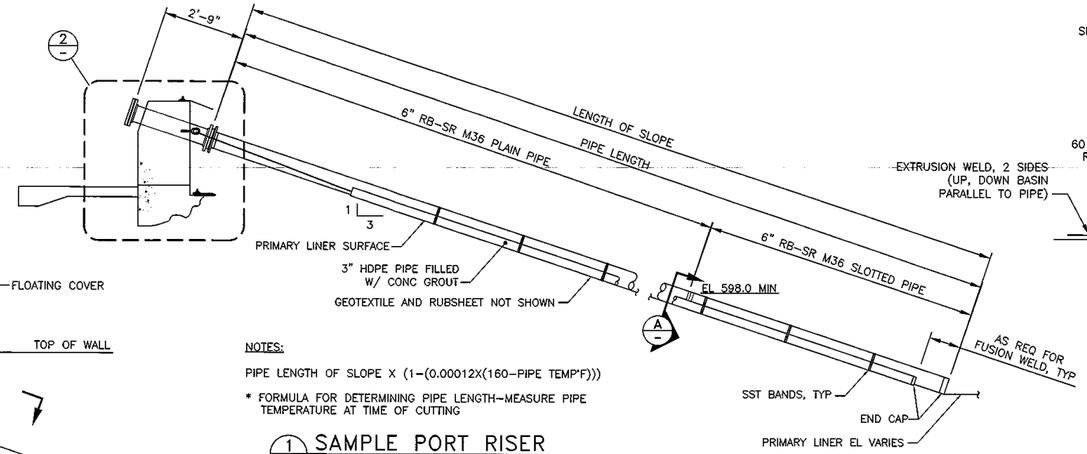

NOTES:

PIPE LENGTH OF SLOPE X (1-(0.00012X(160-PIPE TEMP°F)))

* FORMULA FOR DETERMINING PIPE LENGTH-MEASURE PIPE TEMPERATURE AT TIME OF CUTTING

1 SAMPLE PORT RISER
H-2-838750 SCALE: NTS

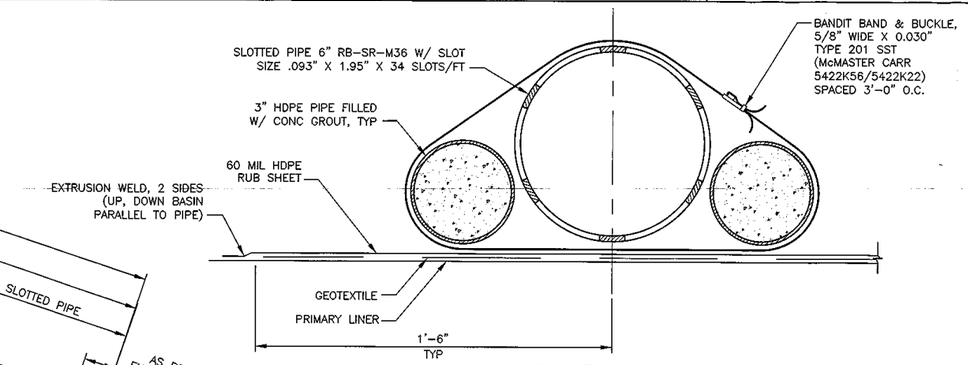

A SECTION
SCALE: 6"=1'-0"

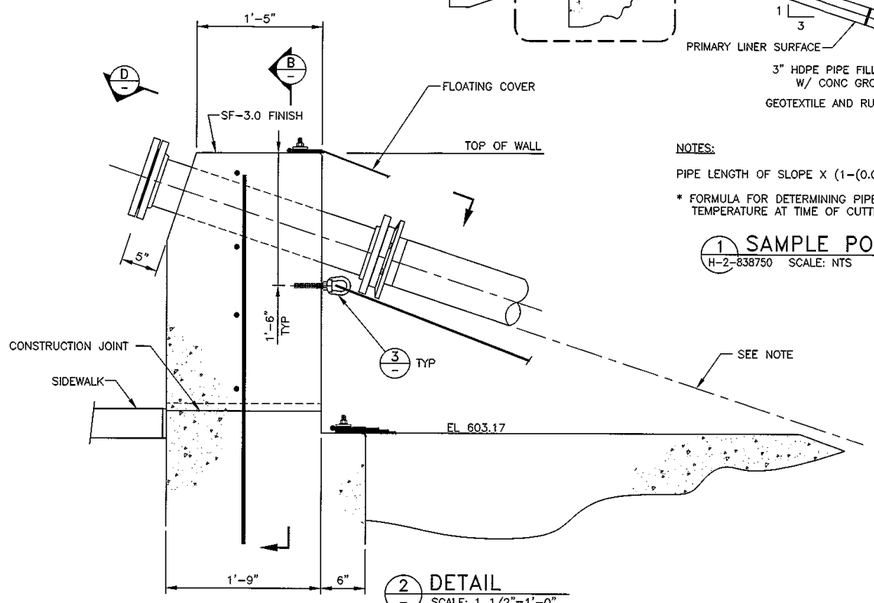

NOTES:

FIELD ADJUST ELEVATION SUCH THAT OUTSIDE BOTTOM OF 6 INCH PIPE ALIGNS 1 INCH ABOVE AND PARALLEL WITH THE SIDE SLOPE OF THE BASIN SOIL BENTONITE SURFACE.

2 DETAIL
SCALE: 1 1/2"=1'-0"

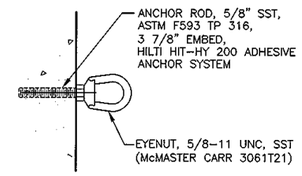

3 DETAIL-WEIGHT ANCHOR
SCALE: 3"=1'-0"

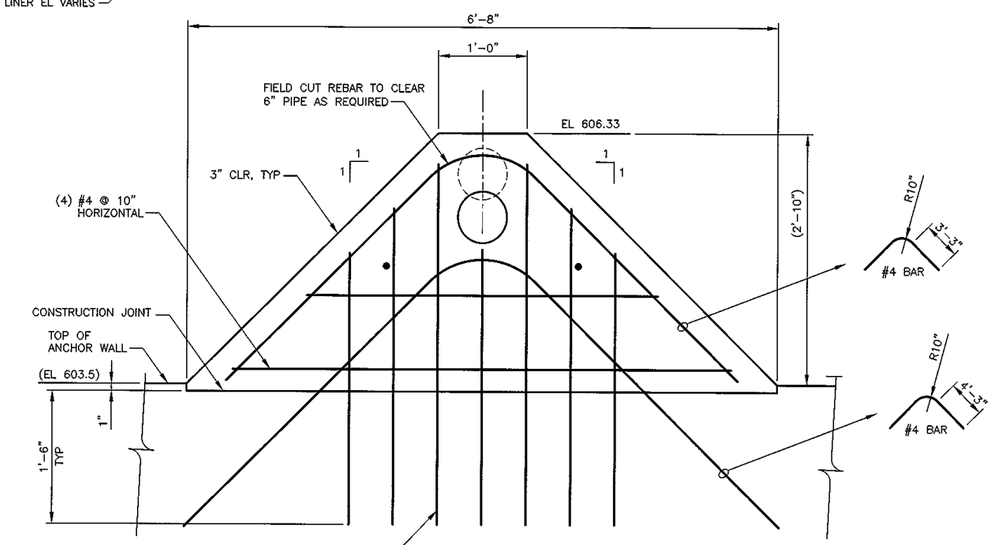

B SECTION
SCALE: NTS

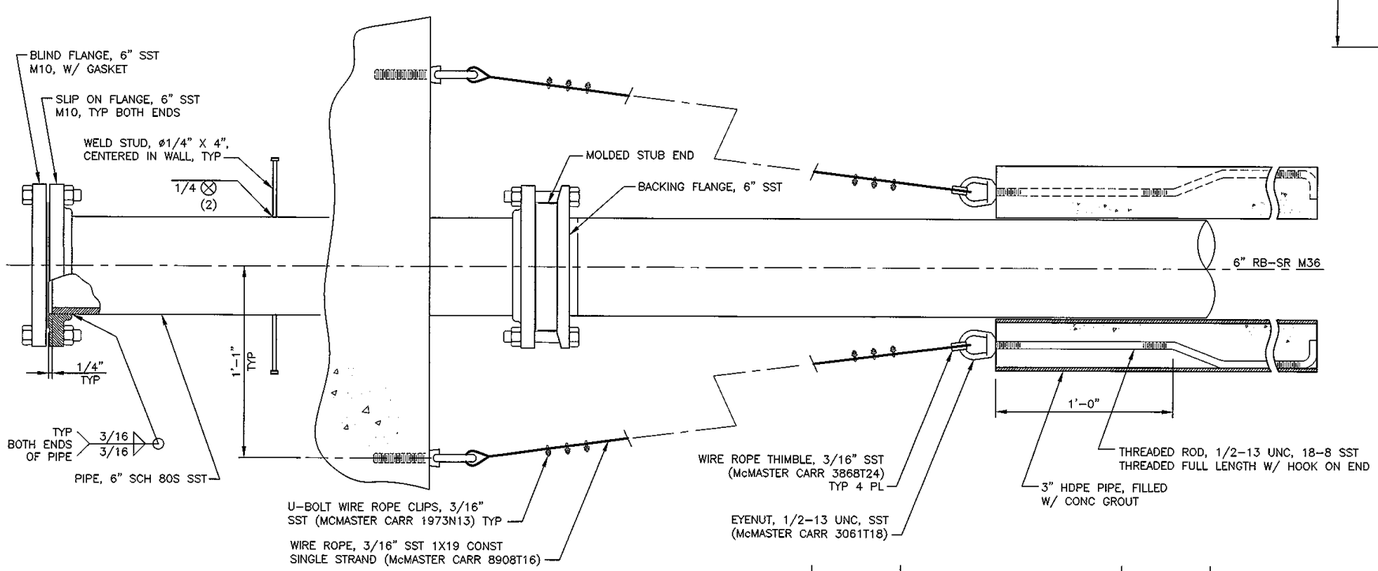

D SECTION
SCALE: 3"=1'-0"

NOTES:

1. SEE H-2-838746-1 FOR ABBREVIATIONS, LEGEND, AND GENERAL NOTES.
2. WELD AND INSPECT STRUCTURAL WELDS IN ACCORDANCE WITH AWS D1.1. 2015, STATICALLY LOADED CRITERIA. ALL WELDS SHALL BE VT ON FINAL PASS UNLESS OTHERWISE SPECIFIED. WELD PROCEDURES AND QUALIFICATIONS PER ASME B&PV CODE, SECTION IX, 2017, ARE ACCEPTABLE.
3. FOR STRUCTURAL ANALYSIS SEE RPP-CALC-63782.

DAVID A. WILSON, STATE OF WASHINGTON, 28592, REGISTERED PROFESSIONAL ENGINEER, 5-20-2020

DATE: May 26,2020 HANFORD RELEASE

DWG NUMBER	TITLE
DRAWING TRACEABILITY LIST	

REF NUMBER	TITLE
REFERENCES	
NEXT USED ON	

REV NO	DESCRIPTION
0	RELEASED PER EDT-882461
REVISIONS	

BLDG NO 242-AL 242AL-41

INDEX NO 0105

CAUTION: NOT COMPLETE WITHOUT CURRENT CHANGE DOCUMENTS FROM DATABASE

	NAME	DATE	COMPANY
DRAWN	J. R. BYERS	4/21/2020	WRPS
DRAWING CHECKER	S. A. SNODGRASS	4/21/2020	WRPS
ENGINEERING PEER REVIEWER	C. C. JOSLYN	4/21/2020	WRPS
DESIGN ENGINEER	R. W. DAVIDSON	4/21/2020	WRPS
DESIGN AUTHORITY	N. W. WILSON	4/21/2020	WRPS

U.S. DEPARTMENT OF ENERGY
Office of River Protection

LERF BASIN 41
CIVIL
SAMPLE PORT RISER DETAILS

SIZE F | DRAWING NUMBER H-2-838753 | SHEET 1 | REV 00

SCALE SHOWN

29675

DOE_TB_F.DWG (MARCH 2019)

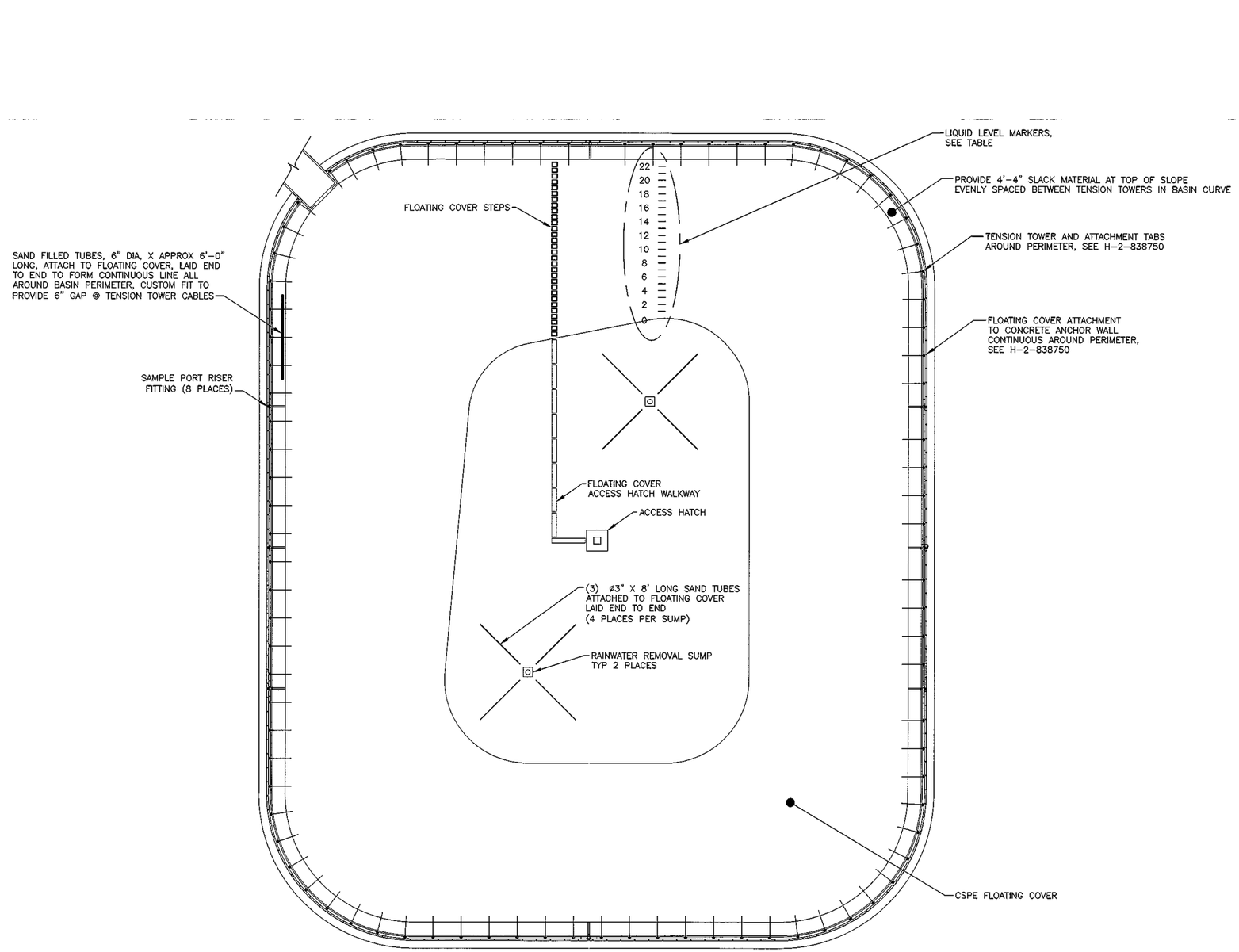

FLOATING COVER
SCALE: 1"=20'-0"

NOTES:

1. FLOATING COVER SHALL BE MECHANICALLY-TENSIONED TYPE, DESIGNED, FABRICATED, INSTALLED AND TESTED IN ACCORDANCE WITH RPP-SPEC-63632 SECTION 334716.13.
2. FOR BASIN 41 LAYOUT INFORMATION INCLUDING PRIMARY LINER, THE CATCH BASIN, ANCHOR WALL, SAMPLE RISERS, TENSION TOWERS, ATTACHMENT POINTS, ETC. SEE DRAWING H-2-838750.
3. LIQUID LEVEL ELEVATION MARKERS SHALL BE FULLY BONDED TO THE TOP OF THE FLOATING COVER. NUMBERED LIQUID LEVEL ELEVATION MARKERS SHALL BE PROVIDED AT EVEN 2 FOOT INTERVALS (0 THROUGH 22) ALONG BASIN SIDE SLOPE. NUMBERS SHALL BE 8" WIDE BY 16" HIGH. TICK MARKS SHALL BE 2" WIDE BY 12" LONG. LIQUID LEVEL MARKERS SHALL BE INSTALLED AT ELEVATIONS INDICATED IN LIQUID LEVEL MARKERS INSTALLATION TABLE BELOW. LIQUID LEVELS ARE APPROXIMATE AND BASED ON UNIFORM DEVELOPMENT OF FOLD AT TOP OF SLOPE.
4. LIQUID LEVEL ELEVATION MARKERS LOCATIONS SHALL BE ESTABLISHED BY LICENSED SURVEYOR.

LIQUID LEVEL MARKERS INSTALLATION TABLE	
LEVEL MARKER	MARKER ELEVATION (POND EMPTY)
---	601.82
22	600.87
---	599.92
20	598.98
---	598.02
18	597.08
---	596.13
16	595.18
---	594.23
14	593.28
---	592.33
12	591.38
---	590.44
10	589.49
---	588.54
8	587.59
---	586.64
6	585.69
---	584.74
4	583.79
---	582.85
2	581.90
---	580.95
0	580.00

DATE: May 26,2020 HANFORD RELEASE

STATE OF WASHINGTON 28592 REGISTERED PROFESSIONAL ENGINEER 5-20-2020

DWG NUMBER	TITLE
DRAWING TRACEABILITY LIST	

REF NUMBER	TITLE
H-2-838745	DRAWING LIST / TITLE SHEET
REFERENCES	
NEXT USED ON END ITEM	

REV NO	DESCRIPTION
0	RELEASED PER EDT-882461
REVISIONS	

BLDG NO 242-AL 242AL-41

INDEX NO 0105

CAUTION: NOT COMPLETE WITHOUT CURRENT CHANGE DOCUMENTS FROM DATABASE

	NAME	DATE	COMPANY
DRAWN	J. R. BYERS	05/20/2020	WRPS
DRAFTING CHECKER	S. A. SNODGRASS	05/20/2020	WRPS
DISCIPLINE HEAD REVIEWER	K. C. JOSLYN	05/20/2020	WRPS
DESIGN ENGINEER	P. M. DORSH	05/20/2020	WRPS
DESIGN AUTHORITY	N. W. WILSON	05/20/2020	WRPS

U.S. DEPARTMENT OF ENERGY
Office of River Protection

LERF BASIN 41
CIVIL
FLOATING COVER

SIZE	DRAWING NUMBER	SHEET	REV
F	H-2-838754	1	00

SCALE SHOWN

29673

DOE_TB_F.DWG (SEPTEMBER 2019)

GENERAL NOTES: (UNLESS OTHERWISE SPECIFIED)

1. DIMENSIONS ARE IN INCHES, TOLERANCES SHALL BE AS FOLLOWS: FRACTIONS = ±1/8" ANGLES = ±0.5° DECIMAL = .XX ±0.03 .XXX ±.010
2. REMOVE ALL BURRS AND BREAK SHARP EDGES.
3. VALVE PN: 990-0100W0A10010-I0S00S0E000KB FIGURE 990 SERIES VALVE, WAFER, 4", CAST IRON BODY, 316SS DISC, 316SS STEM, EPDM SEAT, ASME 150, BARE STEM VALVE.

   GEAR OPERATOR + STEM ADAPTER KIT PN'S: ISV-1103485 + ISV-1103450
   GEAR 24:1 WITH 6" HANDWEEL, BAC 1500 IN LBS + MTG KIT BAC
4. FOR BURIED PIPING ANALYSIS SEE RPP-CALC-63780.
5. USE CLASS M-18 PIPING CODE SEE CONSTRUCTION SPECIFICATION RPP-SPEC-63632 SECTION 40 40 00.
6. FOR PIPING INSULATION SEE CONSTRUCTION SPECIFICATION RPP-SPEC-63632 SECTION 40 42 13.
7. INSTALL FRP PIPING AND FITTINGS IN ACCORDANCE WITH MANUFACTURER INSTRUCTIONS AND/OR RECOMMENDATIONS.
8. WELD AND INSPECT STRUCTURAL WELDS IN ACCORDANCE WITH AWS D1.1, 2015 STATICALLY LOADED CRITERIA. ALL WELDS SHALL BE VT ON FINAL PASS UNLESS OTHERWISE SPECIFIED. WELD PROCEDURES AND QUALIFICATIONS PER ASME B&PV CODE SECTION IX, 2017 ARE ACCEPTABLE.
9. USE #251 DOUBLE CONTAINMENT INTERLOCKING UNION ON BOTH NEW M-18 LINES CENTERED ±20 FT BETWEEN BASIN 41 AND BASIN 42.
10. JOINT ADHESIVES AND BONDING MATERIAL SHALL BE OF THE SAME MANUFACTURER AS THE PIPE AND FITTINGS AND SHALL BE OF THE SAME RESIN SYSTEM. ADHESIVES SHALL BE APPLIED IN ACCORDANCE WITH MANUFACTURER RECOMMENDATIONS.

(NOTES CONTINUED)

11. PREPARE AND PAINT ALL EXPOSED CARBON STEEL SURFACES WITH PPG PSX700 OR EQUIVALENT. FINISH COLOR SHALL BE GRAY. APPLY PER MANUFACTURER'S SPECIFICATIONS. POWDER COATING IS AN ACCEPTABLE COATING SYSTEM.

NORTH

JACOB D WILLIAMS
STATE OF WASHINGTON
51722
REGISTERED
PROFESSIONAL ENGINEER
5/27/2020

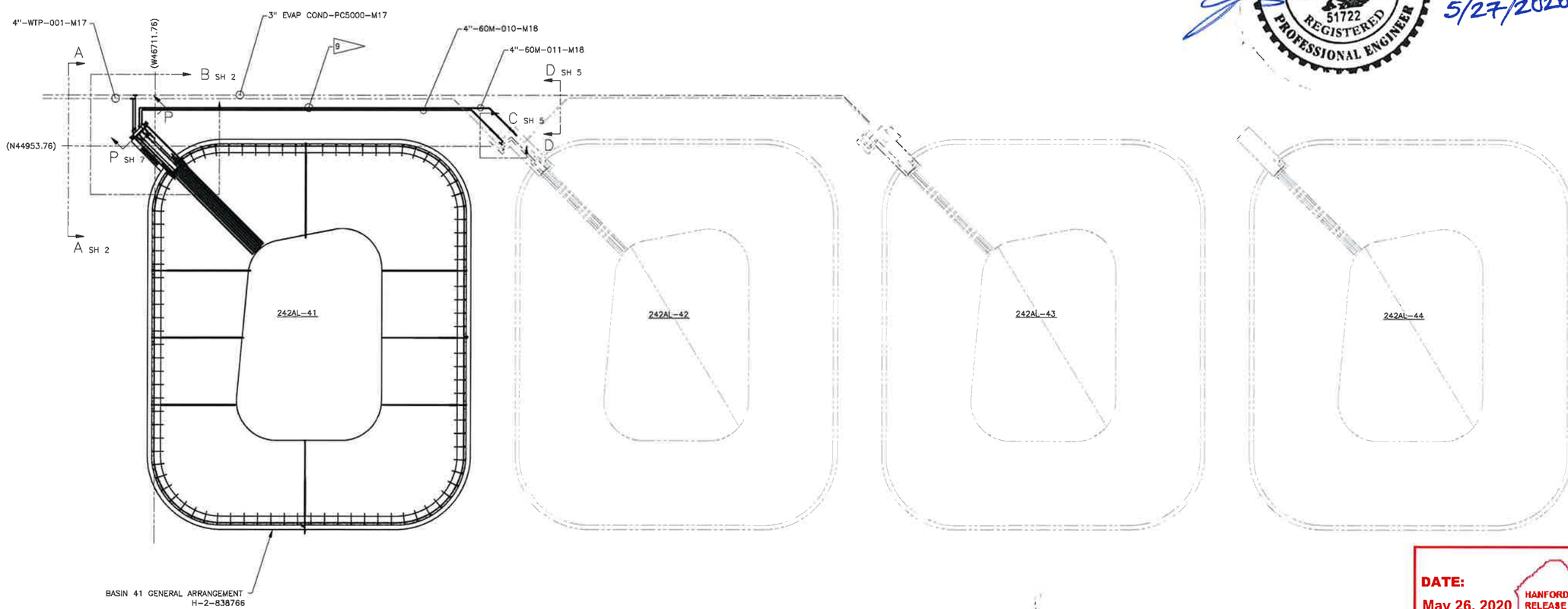

LERF BASIN 41 MECHANICAL GENERAL ARRANGEMENT

SCALE: NONE

DATE: May 26, 2020 HANFORD RELEASE

DWG NUMBER	TITLE
DRAWING TRACEABILITY LIST	

REF NUMBER	TITLE
H-15-38	LERF BASIN 41
H-2-838745	DRAWING LIST/TITLE SHEET
REFERENCES	
NEXT USED ON END ITEM	

REV NO	DESCRIPTION
0	RELEASED PER EDT-882463
REVISIONS	

INDEX NO 242-AL 242AL-41

INDEX NO 8407

CAUTION: NOT COMPLETE WITHOUT CURRENT CHANGE DOCUMENTS FROM DATABASE

	NAME	DATE
DRAFTER	W L ARNDT	05/19/2020
DRAFTING SUPERV	H A MENDEZ	05/19/2020
ENGINEERING TASK REVIEWER	G C JOSLYN	05/19/2020
DESIGN OWNER	J D WILLIAMS	05/19/2020
DESIGN AUTHORITY	N W WILSON	05/19/2020

U.S. DEPARTMENT OF ENERGY
Office of River Protection

LERF BASIN 41 MECHANICAL GENERAL ARRANGEMENT

SIZE F | DRAWING NUMBER H-2-838765 | SHEET 1 | REV 00

SCALE AS SHOWN

28472 DOC_TB_F.DWG (SEPTEMBER 2016)

NOTES:
FOR GENERAL NOTES SEE SHEET 1.

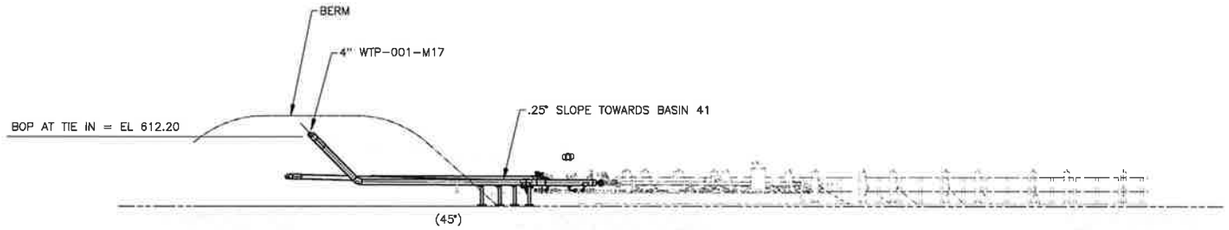

SECTION A-A
SCALE: 1/96
SHEET 1
(ROTATED AND SOME OBJECTS REMOVED FOR CLARITY)

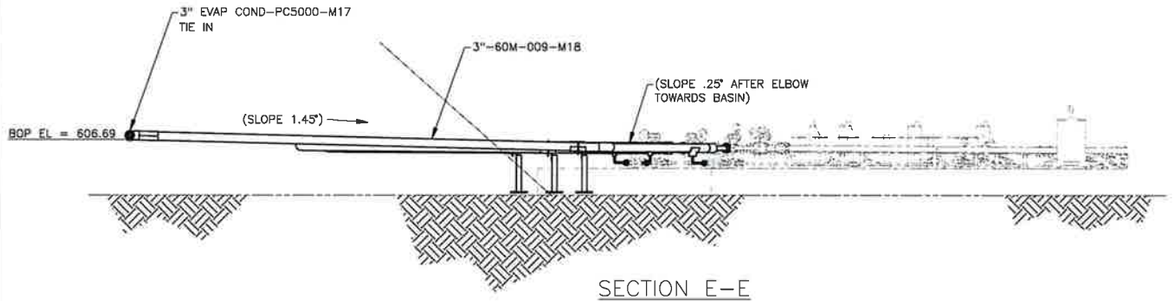

SECTION E-E
SCALE: 1/48
(ROTATED AND SOME OBJECTS REMOVED FOR CLARITY)

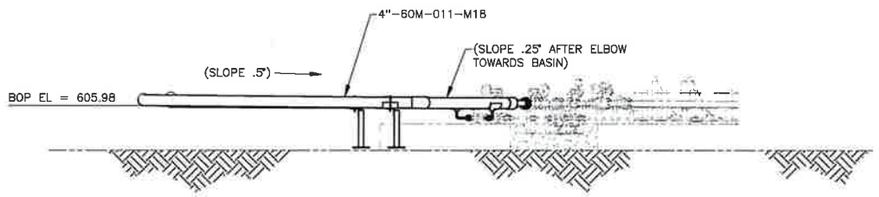

SECTION F-F
SCALE: 1/48
(ROTATED AND SOME OBJECTS REMOVED FOR CLARITY)

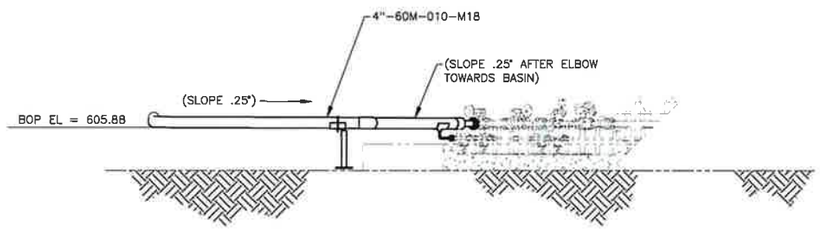

SECTION G-G
SCALE: 1/48
(ROTATED AND SOME OBJECTS REMOVED FOR CLARITY)

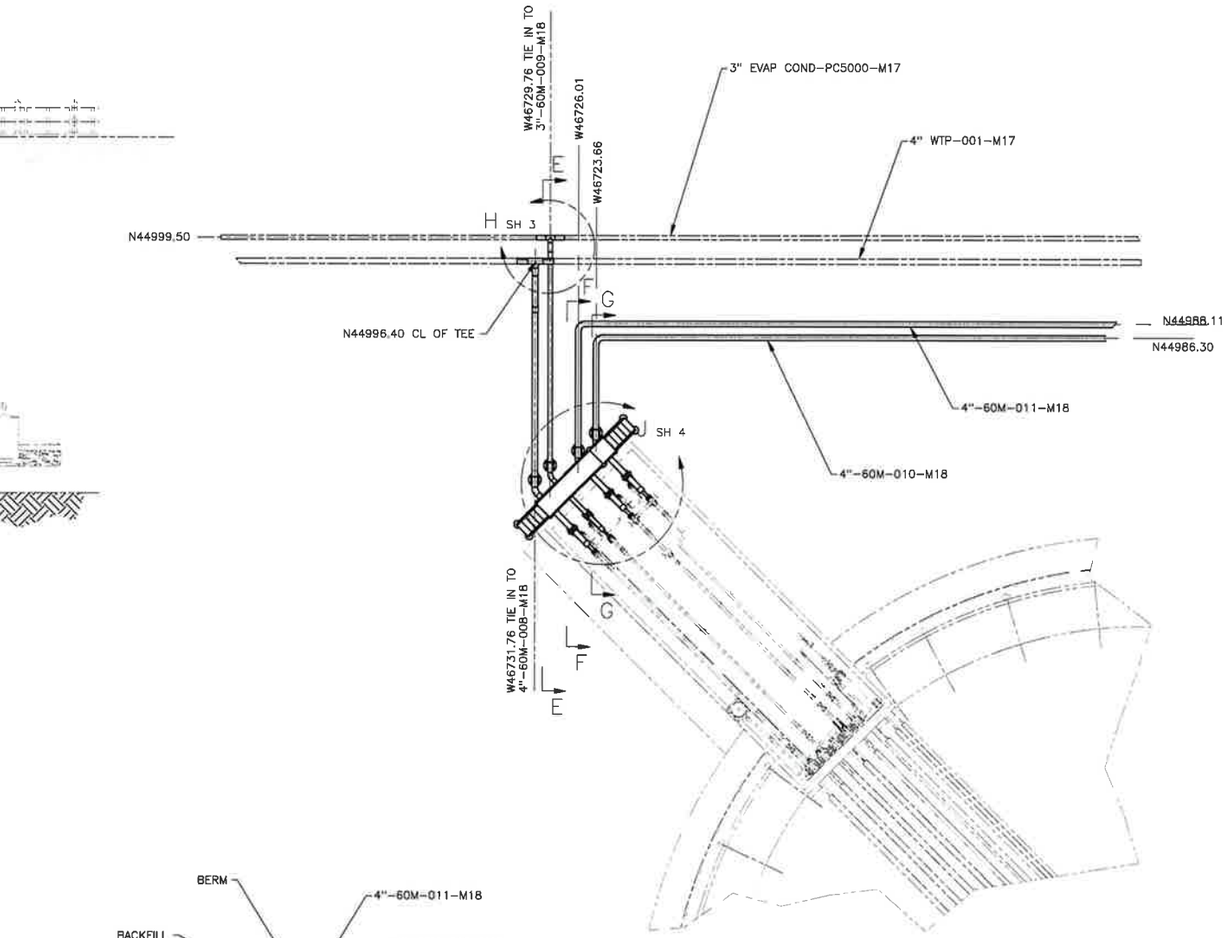

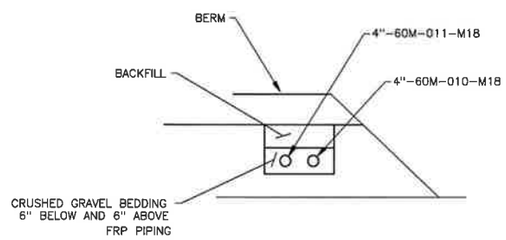

FRP PIPE BERM DETAIL
SCALE: NONE
(SEE RPP-SPEC-63632, SECTION 31 23 33)

DETAIL B
SCALE: 1/96
SHEET 1

JACOB D WILLIAMS
STATE OF WASHINGTON
51722
REGISTERED
PROFESSIONAL ENGINEER

5/27/2020

DATE:
May 26, 2020
HANFORD RELEASE

DWG NUMBER	TITLE
DRAWING TRACEABILITY LIST	

REF NUMBER	TITLE
REFERENCES	
NEXT USED ON SHEET 1	

REV NO	DESCRIPTION
0	RELEASED PER EDT-882463
REVISIONS	

BLDG NO 242-AL 242AL-41
INDEX NO 8407

CAUTION: NOT COMPLETE WITHOUT CURRENT CHANGE DOCUMENTS FROM DATABASE

	NAME	DATE	COMPANY
DRAWN BY	W T ARNDT		WRPS
DRAFTING SUPERVISOR	H A MENDEZ		WRPS
ENGINEERING WORK REVIEWER	C C JOSLYN		WRPS
DESIGN ENGINEER	J D WILLIAMS		WRPS
DESIGN AUTHORITY	N W WILSON		WRPS

U.S. DEPARTMENT OF ENERGY
Office of River Protection

LERF BASIN 41
MECHANICAL
SECTIONS AND DETAILS

SIZE F | DRAWING NUMBER H-2-838765 | SHEET 2 | REV 00
SCALE AS SHOWN

28475

CDC_TB_F.DWG (SEPTEMBER 2016)

NOTES:
FOR GENERAL NOTES SEE SHEET 1.

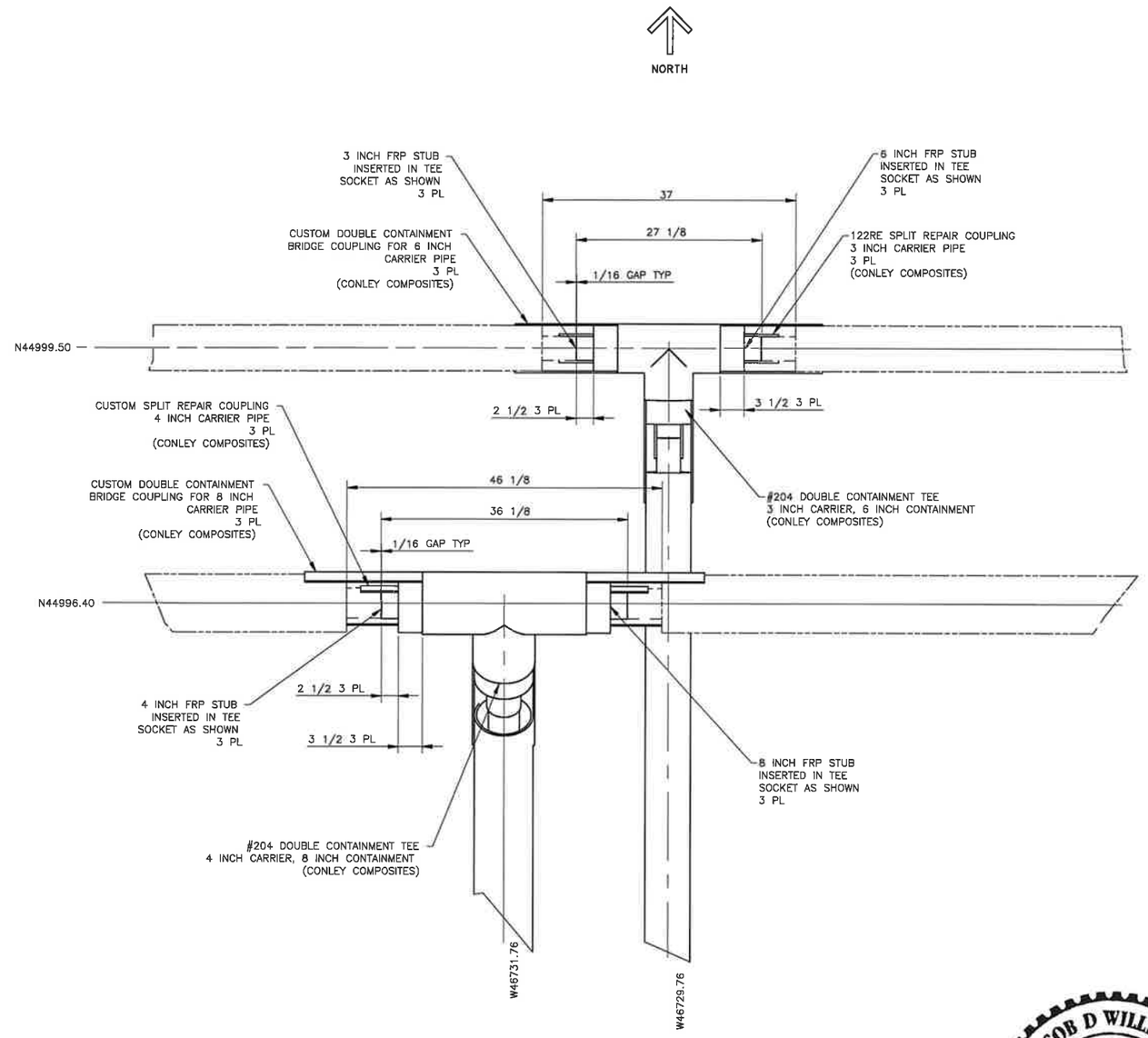

DETAIL H

SCALE: 1/8
SHEET 2
(TIE IN DETAILS, SOME ITEMS REMOVED FOR CLARITY)

JACOB D WILLIAMS
STATE OF WASHINGTON
51722
REGISTERED
PROFESSIONAL ENGINEER

5/27/2020

DATE:
May 26, 2020

HANFORD RELEASE

DWG NUMBER	TITLE
DRAWING TRACEABILITY LIST	

REF NUMBER	TITLE
REFERENCES	
NEXT USED ON SHEET 1	

REV NO	DESCRIPTION
0	RELEASED PER EDT-882463
REVISIONS	

BLDG NO 242-AL 242AL-41

INDEX NO 8407

CAUTION: NOT COMPLETE WITHOUT CURRENT CHANGE DOCUMENTS FROM DATABASE.

	NAME	DATE	COMPANY
DRAWN	W. T. ARNDT		
DRAFTING CHECKED	H. A. MENDEZ		
CONSULTING TASK REFERENCE	C. C. JOSLYN		
DESIGN CHECKED	J. D. WILLIAMS		
DESIGN AUTHORITY	N. W. WILSON		

U.S. DEPARTMENT OF ENERGY
Office of River Protection

LERF BASIN 41
MECHANICAL
DETAILS

SIZE F | DRAWING NUMBER H-2-838765 | SHEET 3 | REV 00

SCALE AS SHOWN

29761

DOE_TBLF.DWG (SEPTEMBER 2016)

NOTES:
FOR GENERAL NOTES SEE SHEET 1.

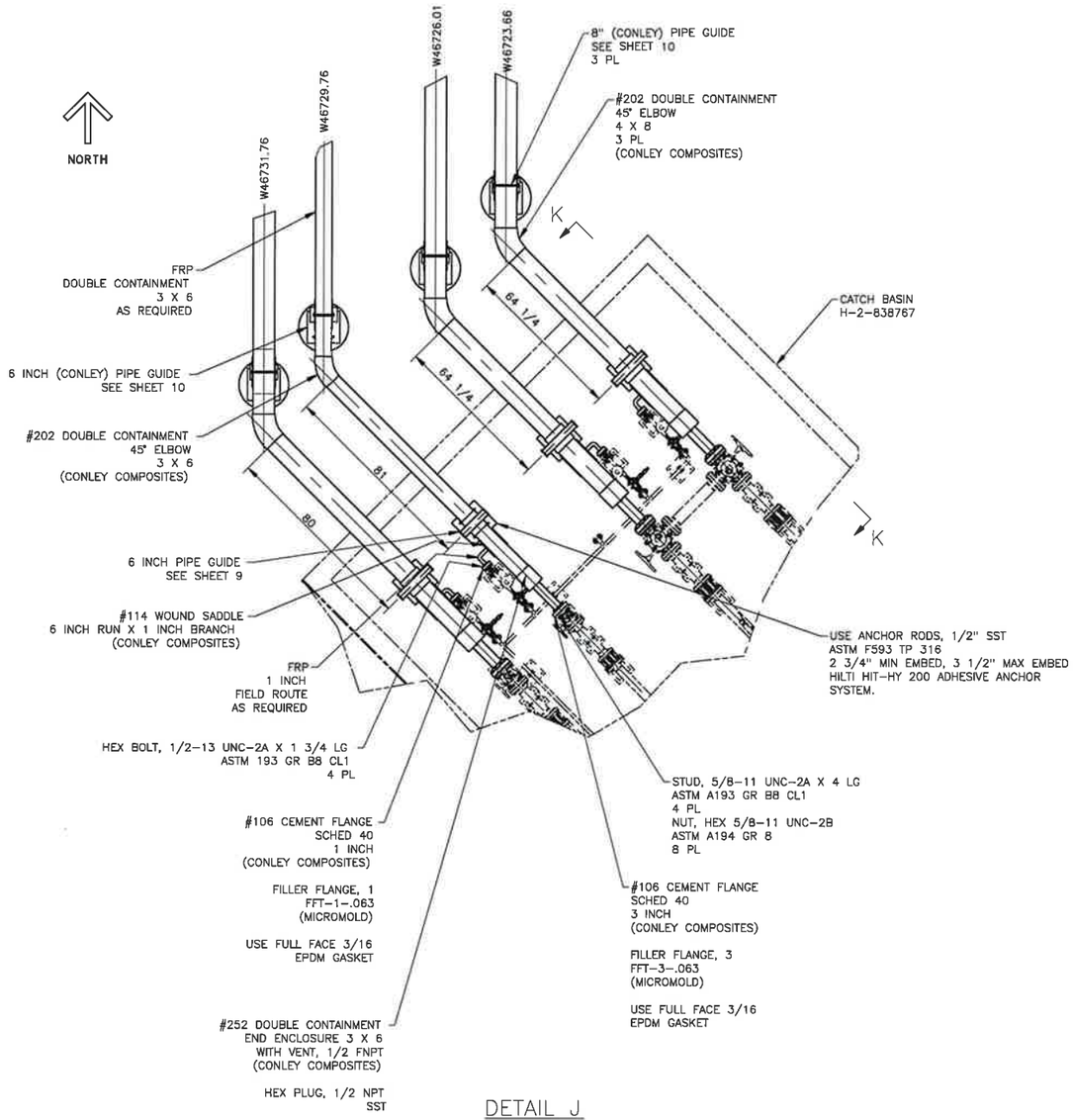

DETAIL J

SCALE: 1/24
SHEET 2
(SOME OBJECTS REMOVED FOR CLARITY)

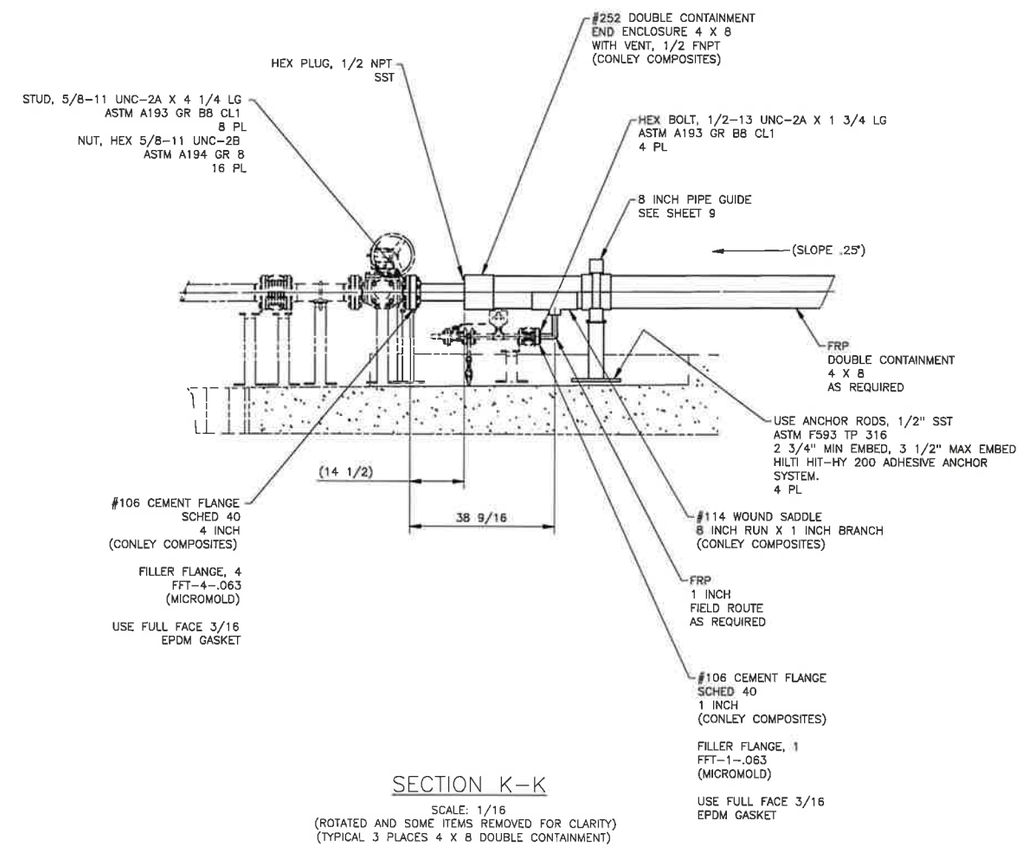

SECTION K-K

SCALE: 1/16
(ROTATED AND SOME ITEMS REMOVED FOR CLARITY)
(TYPICAL 3 PLACES 4 X 8 DOUBLE CONTAINMENT)

JACOB D WILLIAMS
STATE OF WASHINGTON
51722
REGISTERED
PROFESSIONAL ENGINEER

5/27/2020

DATE:
May 26, 2020
HANFORD RELEASE

DWG NUMBER	TITLE
DRAWING TRACEABILITY LIST	

REF NUMBER	TITLE
REFERENCES	
NEXT USED ON SHEET 1	

REV NO	DESCRIPTION
0	RELEASED PER EDT-882463
REVISIONS	

BLDG NO 242-AL 242AL-41

INDEX NO 8407

CAUTION: NOT COMPLETE WITHOUT CURRENT CHANGE DOCUMENTS FROM DATABASE

	NAME	DATE	COMPANY
DRAFTER	W T ARNOT	5/26/20	SSPS
ENGINEERING DESIGN	H A MENDEZ	5/26/20	SSPS
ENGINEERING TECH REVIEWER	G E JOSLYN	5/26/20	SSPS
DESIGN CHECKER	J D WILLIAMS	5/26/20	SSPS
DESIGN AUTHORITY	N W WILSON	5/26/20	SSPS

U.S. DEPARTMENT OF ENERGY
Office of River Protection

LERF BASIN 41
MECHANICAL
SECTIONS AND DETAILS

SIZE F | DRAWING NUMBER H-2-838765 | SHEET 4 | REV 00

SCALE AS SHOWN

28474

DOE_YB_F.DWG (SEPTEMBER 2016)

NOTES:
FOR GENERAL NOTES SEE SHEET 1.

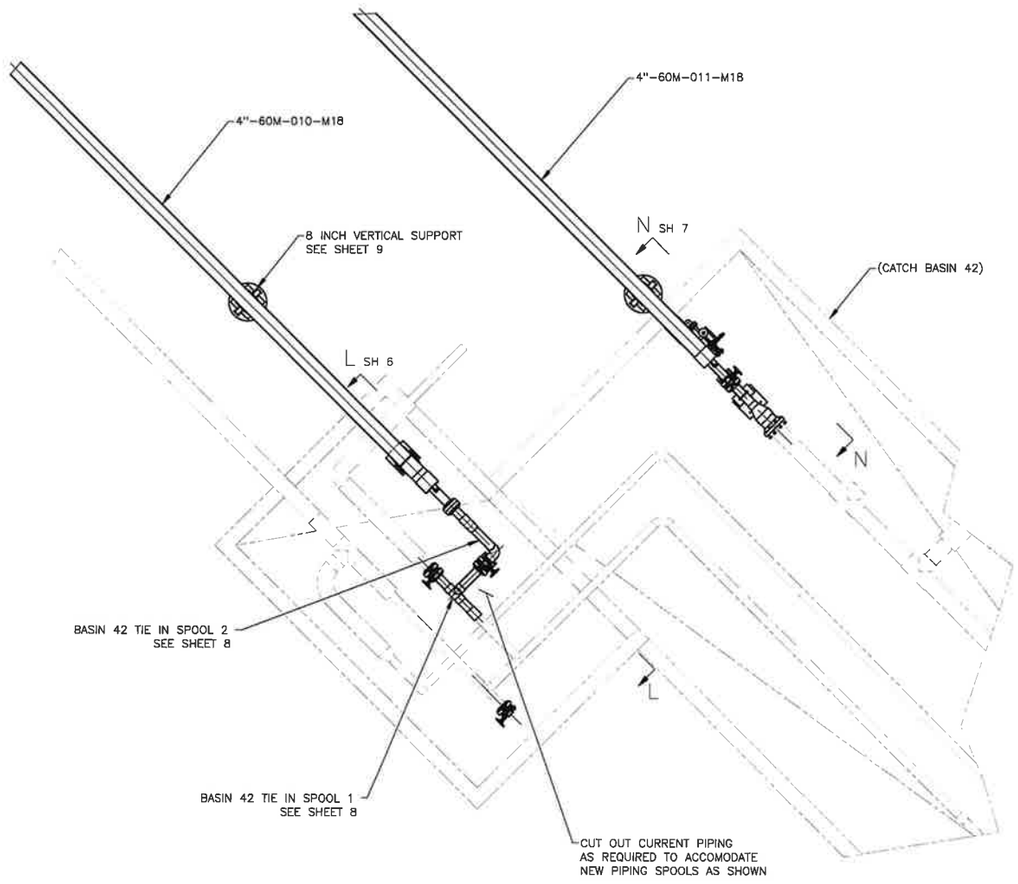

DETAIL C

SCALE: 1/32
SHEET 1

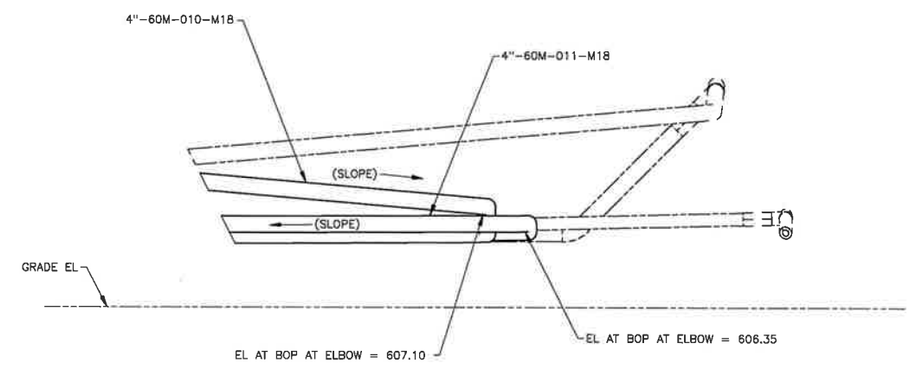

SECTION D-D

SCALE: 1/32
SHEET 1
(SOME OBJECTS REMOVED FOR CLARITY)

JACOB D WILLIAMS
STATE OF WASHINGTON
51722
REGISTERED
PROFESSIONAL ENGINEER

5/27/2020

DATE:
May 26, 2020

HANFORD RELEASE

DWG NUMBER	TITLE
DRAWING TRACEABILITY LIST	

REF NUMBER	TITLE
REFERENCES	
NEXT USED ON SHEET 1	

REV NO	DESCRIPTION
0	RELEASED PER EDT-882463
REVISIONS	

BLDG NO 242-AL 242AL-41

INDEX NO 8407

CAUTION: NOT COMPLETE WITHOUT CURRENT CHANGE DOCUMENTS FROM DATABASE

	NAME	DATE
DRAFTER	W T ARNDT	05/26/2020
DESIGN ENGINEER	H A MENDEZ	05/26/2020
ENGINEERING PEER REVIEWER	C C JOSLYN	05/26/2020
DESIGN ENGINEER	J D WILLIAMS	05/26/2020
DESIGN AUTHORITY	N W WILSON	05/26/2020

U.S. DEPARTMENT OF ENERGY
Office of River Protection

LERF BASIN 41
MECHANICAL
SECTIONS AND DETAILS

SIZE F | DRAWING NUMBER H-2-838765 | SHEET 5 | REV 00

SCALE AS SHOWN

29764

DOE_TIL_F.DWG (SEPTEMBER 2019)

NOTES:
FOR GENERAL NOTES SEE SHEET 1.

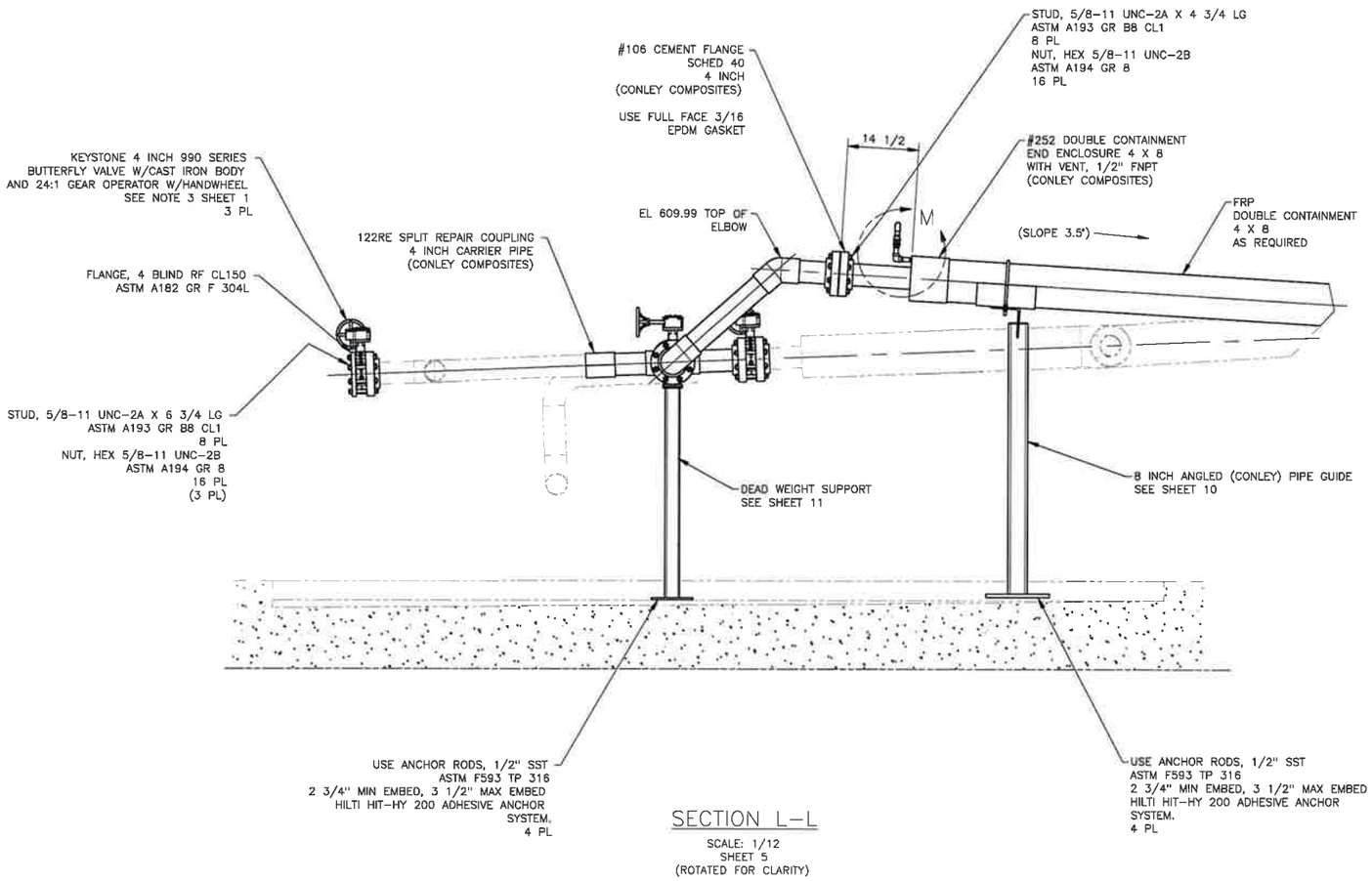

SECTION L-L
SCALE: 1/12
SHEET 5
(ROTATED FOR CLARITY)

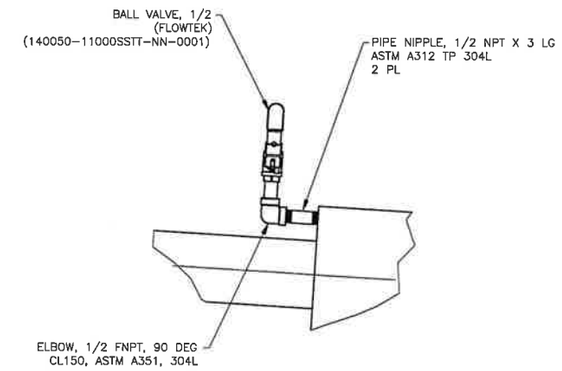

DETAIL M
SCALE: 1 / 4

JACOB D WILLIAMS
STATE OF WASHINGTON
51722
REGISTERED
PROFESSIONAL ENGINEER

5/27/2020

DATE:
May 26, 2020
HANFORD RELEASE

DWG NUMBER	TITLE
DRAWING TRACEABILITY LIST	

REF NUMBER	TITLE
REFERENCES	
NEXT USED ON SHEET 1	

REV NO	DESCRIPTION
0	RELEASED PER EDT-882463
REVISIONS	

BLDG NO: 242-AL, 242AL-41
INDEX NO: 8407

CAUTION: NOT COMPLETE WITHOUT CURRENT CHANGE DOCUMENTS FROM DATABASE

	NAME	DATE	COMPANY
DRAFTER	W T ARNDT	5/26/2020	KBPS
ENGINEERING DESIGNER	H A MENDEZ	5/26/2020	KBPS
ENGINEERING TECH. REVIEWER	G C JOSLYN	5/26/2020	KBPS
DESIGN ENGINEER	J D WILLIAMS	5/26/2020	KBPS
DESIGN AUTHORITY	N W WILSON	5/26/2020	KBPS

U.S. DEPARTMENT OF ENERGY
Office of River Protection

LERF BASIN 41
MECHANICAL
SECTIONS

SIZE	DRAWING NUMBER	SHEET	REV
F	H-2-838765	6	00

SCALE: AS SHOWN

29767

DOE_TBLF.DWG (SEPTEMBER 2016)

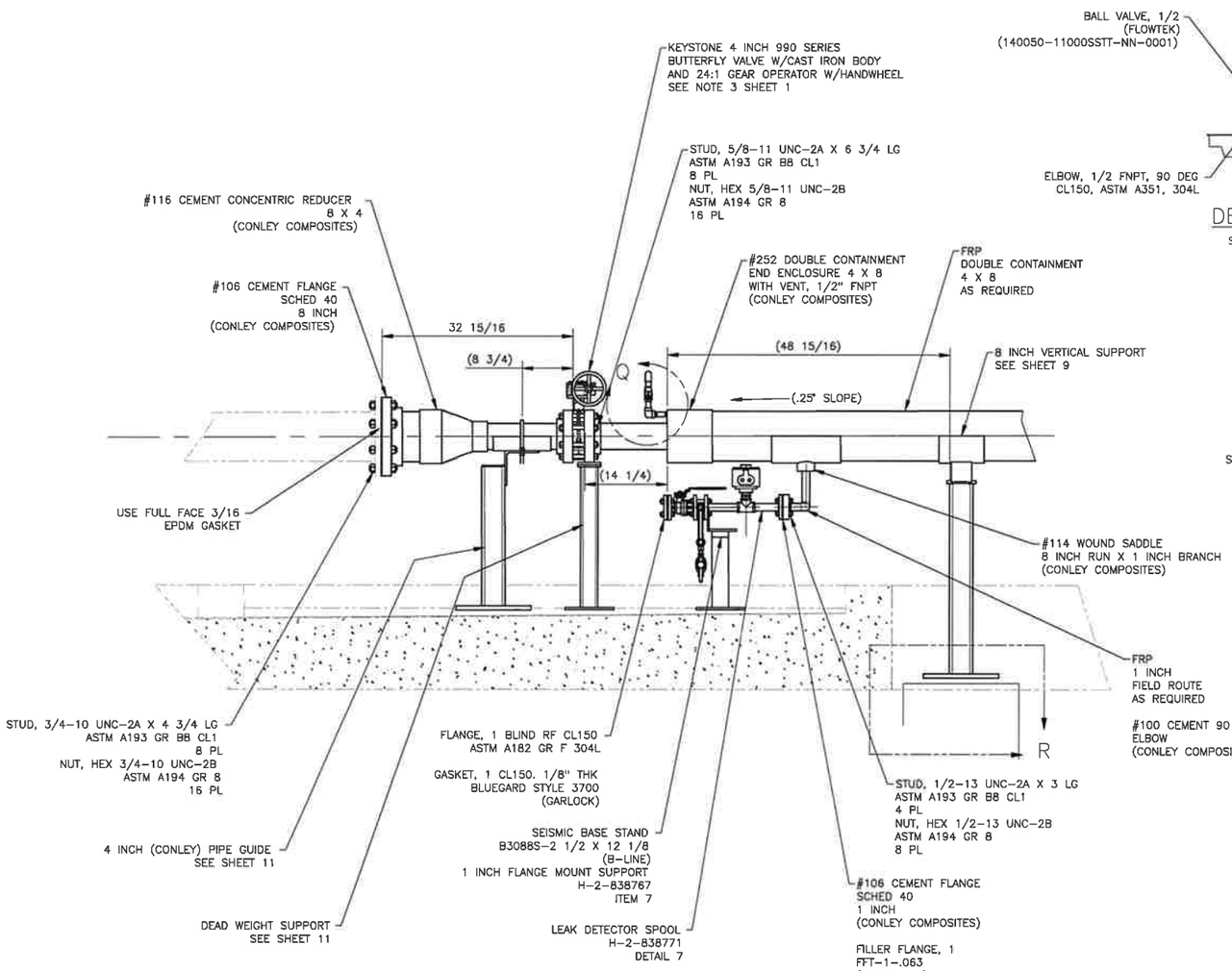

SECTION N-N

SCALE: NONE
SHEET 5
(BACK GROUND ITEMS REMOVED AND ROTATED FOR CLARITY)

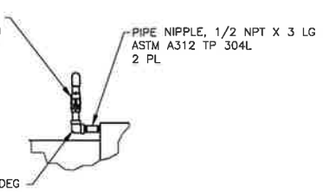

DETAIL Q

SCALE: 1/8

NOTES:

FOR GENERAL NOTES SEE SHEET 1.

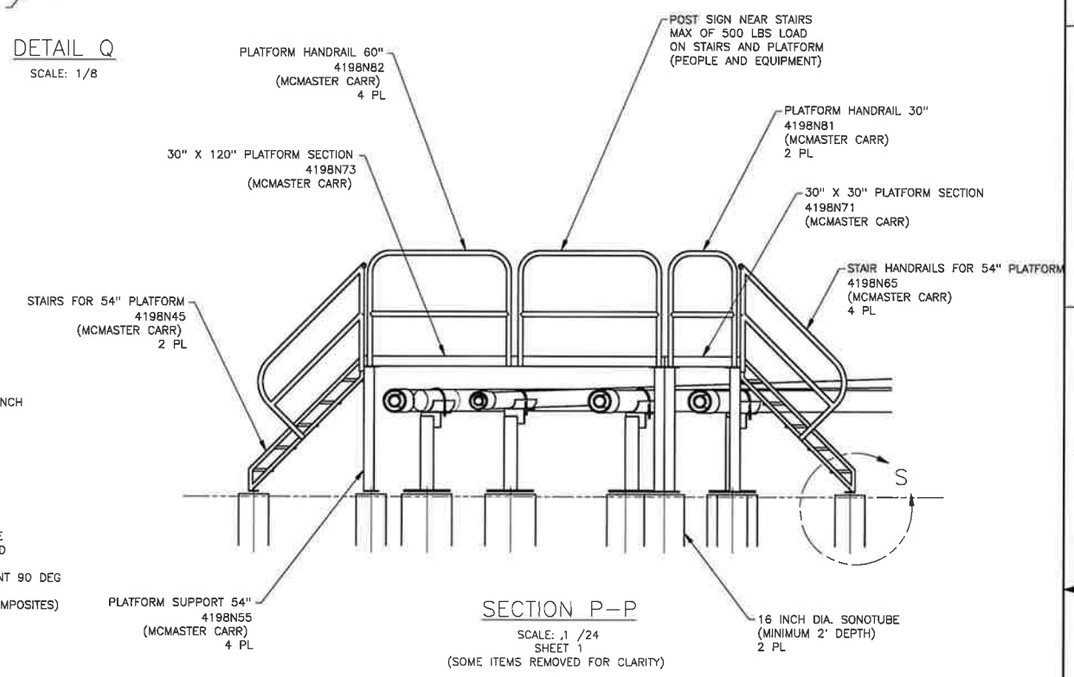

SECTION P-P

SCALE: ,1 /24
SHEET 1
(SOME ITEMS REMOVED FOR CLARITY)

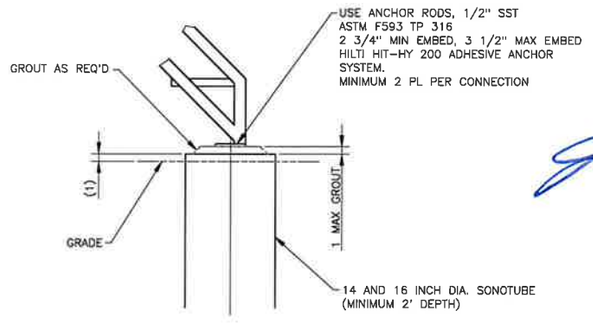

DETAIL S

SCALE: 1/8
(TYPICAL SONOTUBE MOUNTING FOR PLATFORM AND STAIRS)

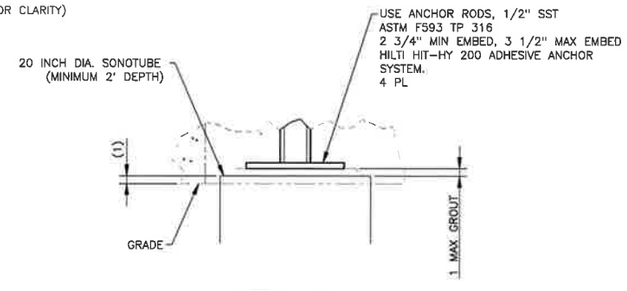

DETAIL R

SCALE: 1/8
(TYPICAL PIPE SUPPORT AND SONOTUBE)

JACOB D WILLIAMS
STATE OF WASHINGTON
51722
REGISTERED
PROFESSIONAL ENGINEER

5/27/2020

DATE:
May 26, 2020
HANFORD RELEASE

DWG NUMBER	TITLE
DRAWING TRACEABILITY LIST	

REF NUMBER	TITLE
REFERENCES	
NEXT USED ON SHEET 1	

REV NO	DESCRIPTION
0	RELEASED PER EDT-882463
REVISIONS	

BLDG NO 242-AL 242AL-41

INDEX NO 8407

CAUTION: NOT COMPLETE WITHOUT CURRENT CHANGE DOCUMENTS FROM DATABASE

	NAME	DATE
DRAFTER	W T ARNOT	5/5/2020
DRAFTING CHECKER	H A MENDEZ	5/5/2020
ENGINEERING TECH REVIEWER	C C JOSLYN	5/5/2020
DESIGN ENGINEER	J D WILLIAMS	5/5/2020
DESIGN AUTHORITY	N W WILSON	5/5/2020

U.S. DEPARTMENT OF ENERGY
Office of River Protection

LERF BASIN 41
MECHANICAL
SECTIONS

SIZE F | DRAWING NUMBER H-2-838765 | SHEET 7 | REV 00

SCALE AS SHOWN

29752

DOE_TB_F.DWG (SEPTEMBER 2018)

NOTES:
FOR GENERAL NOTES SEE SHEET 1.

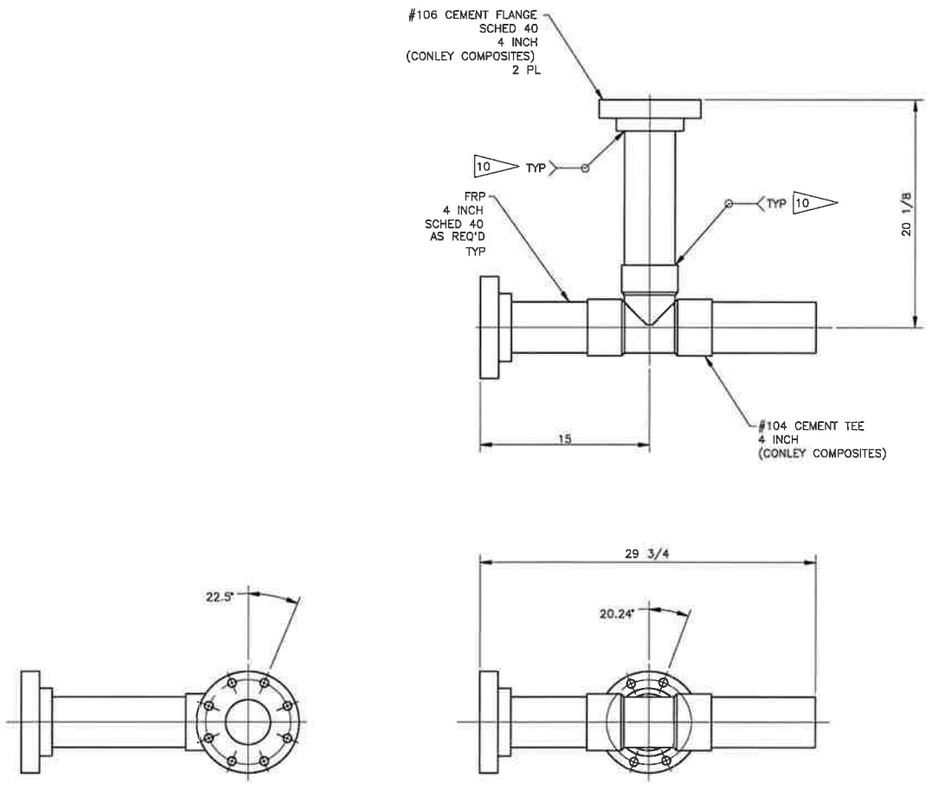

BASIN 42 TIE IN SPOOL 1

SCALE : 3/16

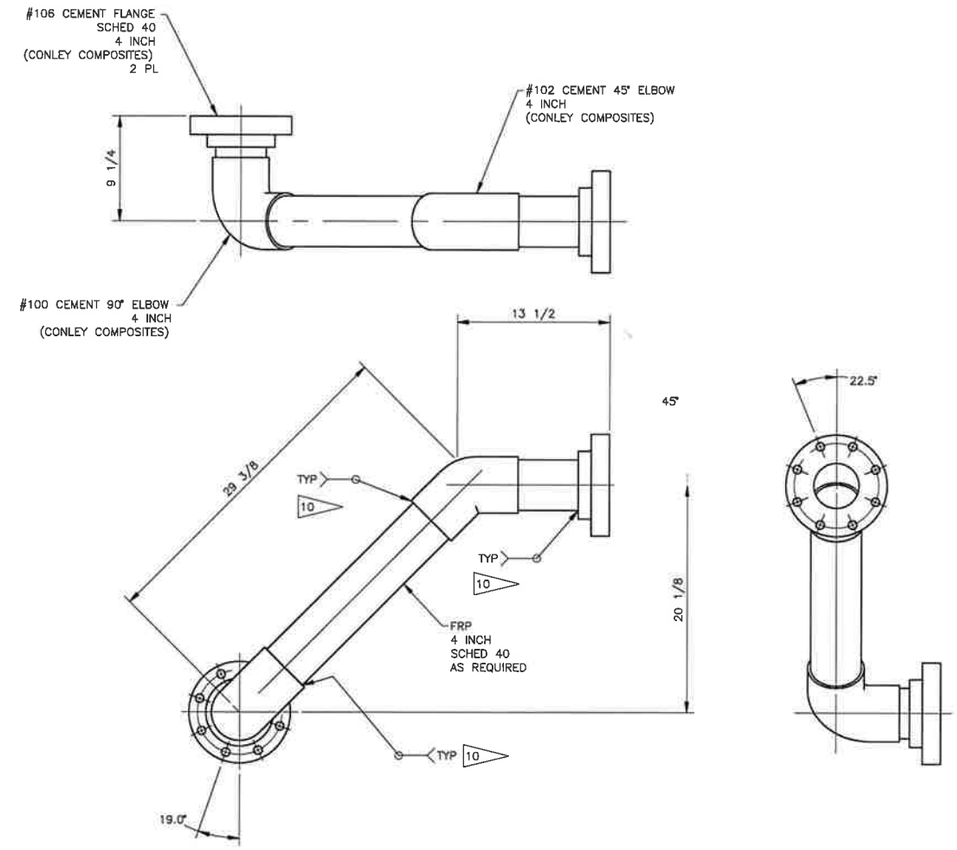

BASIN 42 TIE IN SPOOL 2

SCALE : 3/16

JACOB D WILLIAMS
STATE OF WASHINGTON
51722
REGISTERED
PROFESSIONAL ENGINEER

5/27/2020

DATE:
May 26, 2020

HANFORD RELEASE

DWG NUMBER	TITLE
DRAWING TRACEABILITY LIST	

REF NUMBER	TITLE
REFERENCES	
NEXT USED ON SHEET 1	

REV NO	DESCRIPTION
0	RELEASED PER EDT-882463
REVISIONS	

BLDG NO: 242-AL, 242AL-41

INDEX NO: 8407

CAUTION: NOT COMPLETE WITHOUT CURRENT CHANGE DOCUMENTS FROM DATABASE

	NAME	DATE	COMPANY
DRAFTER	W T ARNDT	05/26/2020	WRPS
DRAFTING SUPERV	H A MENDEZ	05/26/2020	WRPS
ENGINEERING PEER REVIEWER	C C JOSLYN	05/26/2020	WRPS
DESIGN ENGINEER	J D WILLIAMS	05/26/2020	WRPS
DESIGN AUTHORITY	N W WILSON	05/26/2020	WRPS

U.S. DEPARTMENT OF ENERGY
Office of River Protection

LERF BASIN 41
MECHANICAL
DETAILS

SIZE	DRAWING NUMBER	SHEET	REV
F	H-2-838765	8	00

SCALE: AS SHOWN

28459

DOE_TEL_F.DWG (SEPTEMBER 2019)

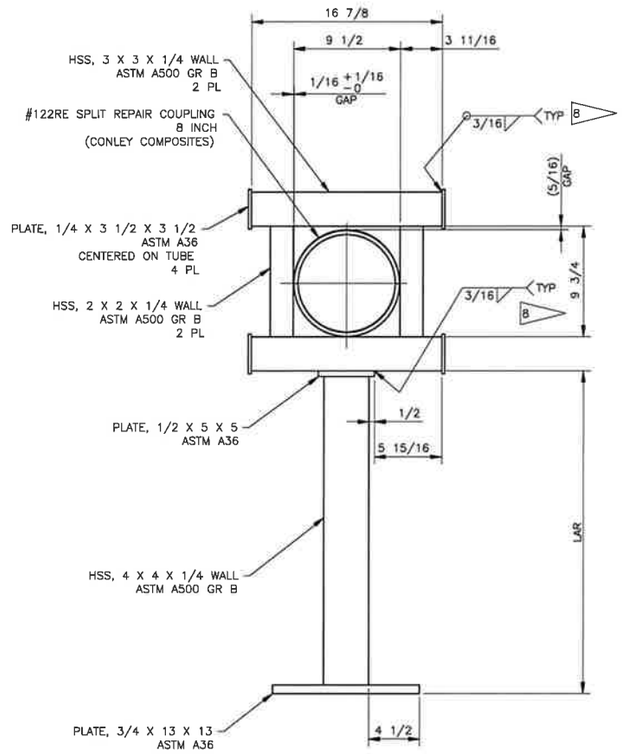

8 INCH PIPE GUIDE

SCALE: 3/16

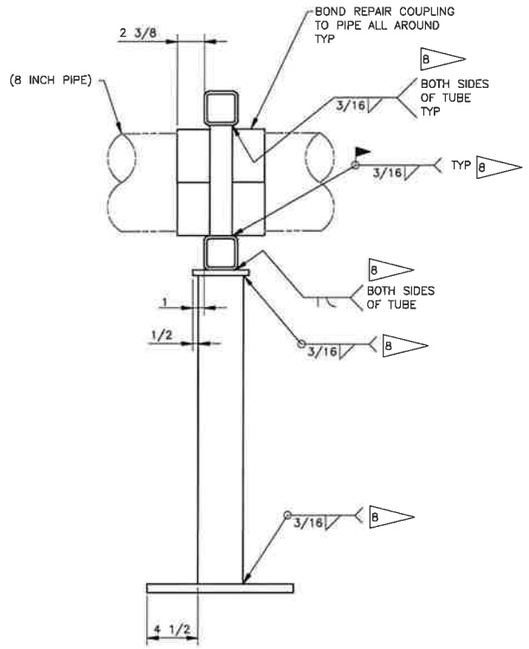

(SOME OBJECTS REMOVED FROM THIS VIEW FOR CLARITY)

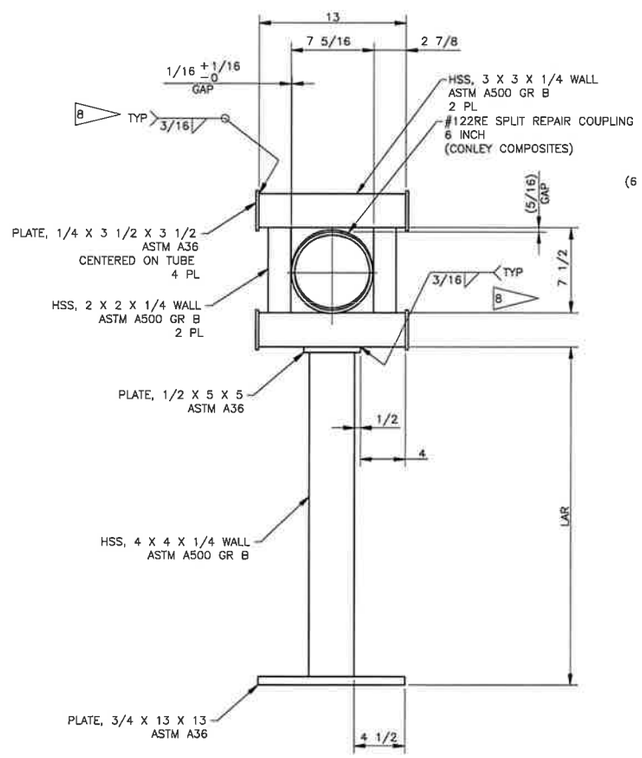

6 INCH PIPE GUIDE

SCALE: 3/16

NOTES:

FOR GENERAL NOTES SEE SHEET 1.

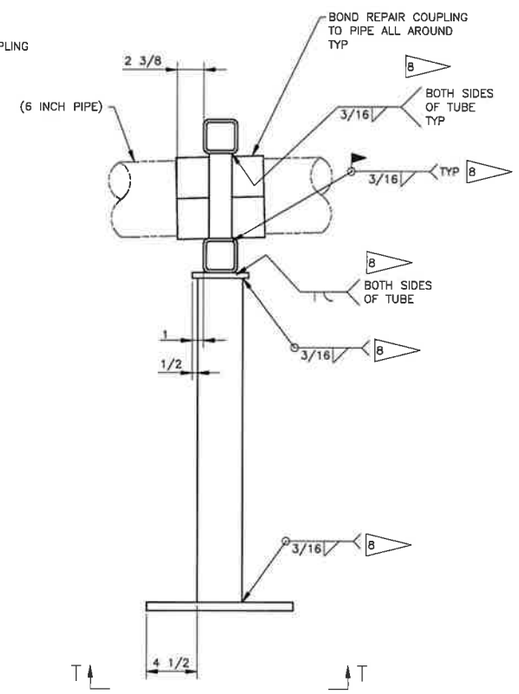

(SOME OBJECTS REMOVED FROM THIS VIEW FOR CLARITY)

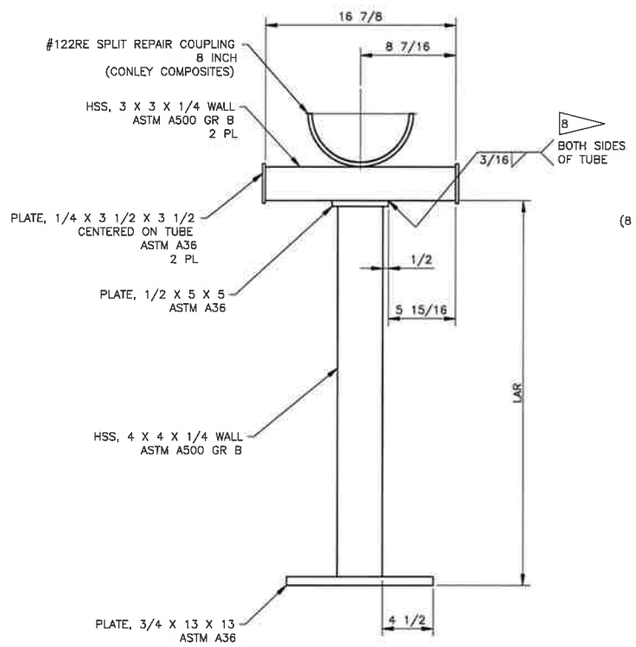

8 INCH VERTICAL PIPE SUPPORT

SCALE: 3/16

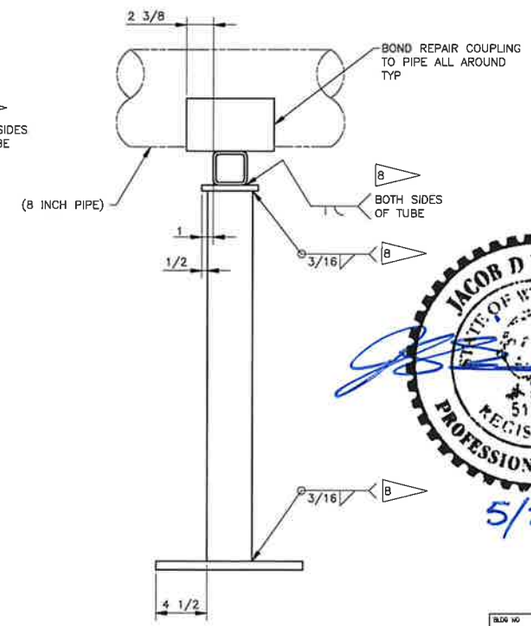

(SOME OBJECTS REMOVED FROM THIS VIEW FOR CLARITY)

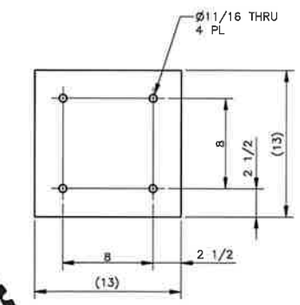

VIEW T-T

SCALE: 3/16

(TYPICAL ALL SUPPORTS)

JACOB D WILLIAMS
STATE OF WASHINGTON
51722
REGISTERED
PROFESSIONAL ENGINEER

5/27/2020

DATE:
May 26, 2020

HANFORD RELEASE

DWG NUMBER	TITLE
DRAWING TRACEABILITY LIST	

REF NUMBER	TITLE
REFERENCES	
NEXT USED ON SHEET 1	

REV NO	DESCRIPTION
0	RELEASED PER EDT-882463
REVISIONS	

BLDG NO 242-AL 242AL-41

INDEX NO 8407

CAUTION: NOT COMPLETE WITHOUT CURRENT CHANGE DOCUMENTS FROM DATABASE

	NAME	DATE	COMPANY
DRAWN BY	W T ARNDT	5/8/2020	WSPG
CHECKED DRAWN	H A MENDEZ	5/8/2020	WSPG
ENGINEERING PEER REVIEWER	C C JOSLYN	5/8/2020	WSPG
DESIGN ENGINEER	J D WILLIAMS	5/8/2020	WSPG
DESIGN AUTHORITY	N W WILSON	5/8/2020	WSPG

U.S. DEPARTMENT OF ENERGY
Office of River Protection

LERF BASIN 41
MECHANICAL
DETAILS

SIZE	DRAWING NUMBER	SHEET	REV
F	H-2-838765	9	00

SCALE AS SHOWN

28473

DOE_TILF.DWG (SEPTEMBER 2019)

NOTES:
FOR GENERAL NOTES SEE SHEET 1.

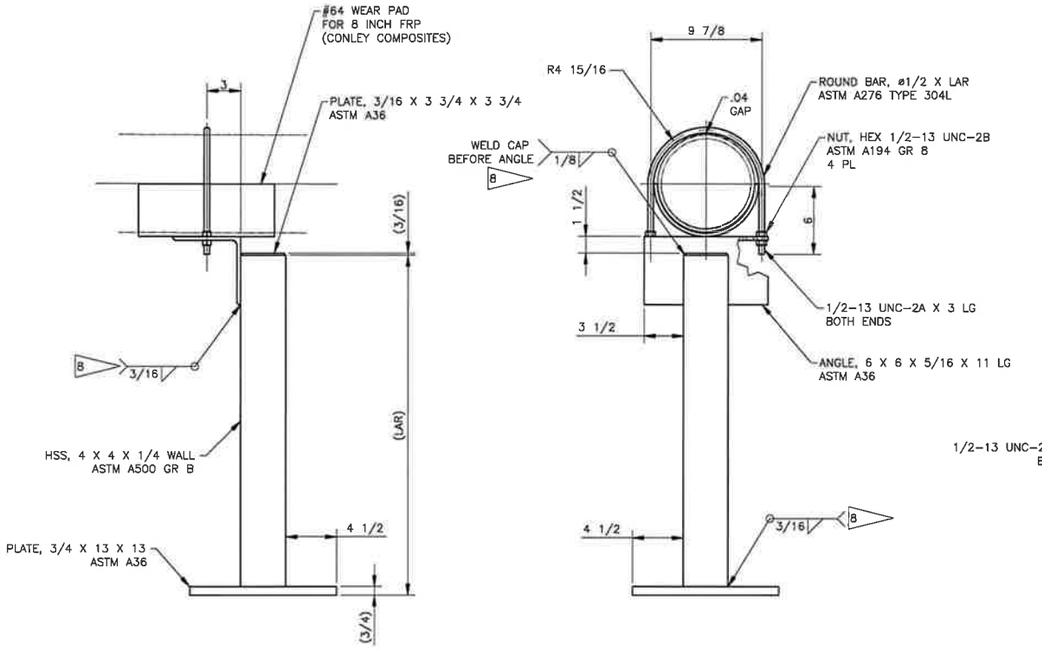

8 INCH (CONLEY) PIPE GUIDE

SCALE: 3/16

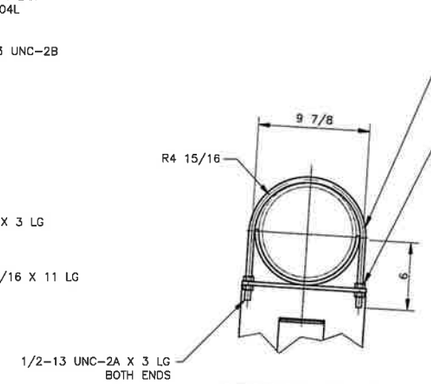

SECTION U-U

SCALE: 3/16

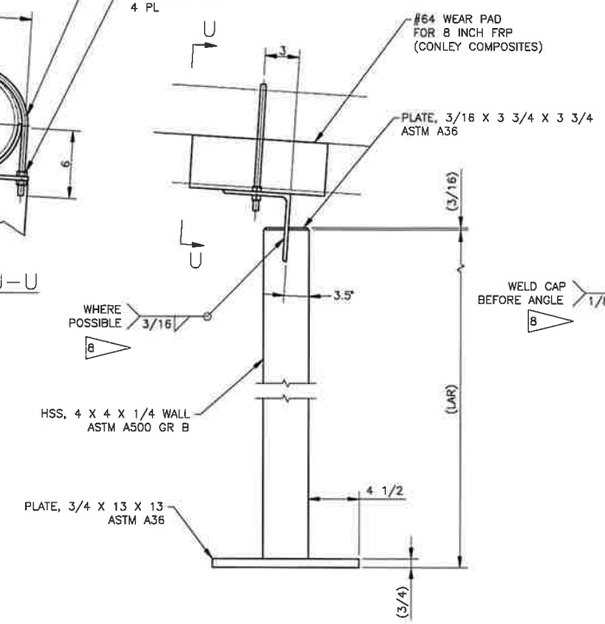

8 INCH ANGLED (CONLEY) PIPE GUIDE

SCALE: 3/16

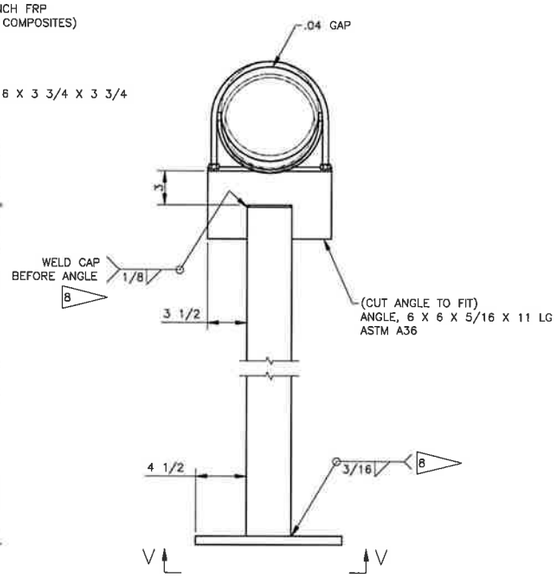

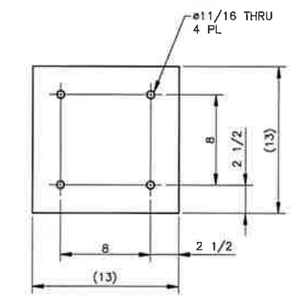

VIEW V-V

SCALE: 3/16
(TYPICAL ALL SUPPORTS)

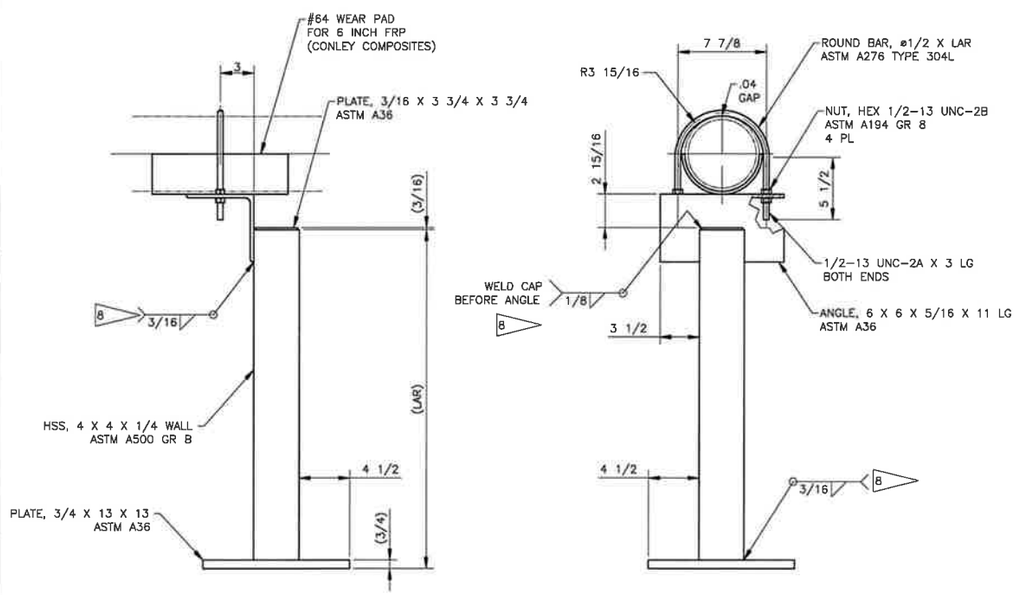

6 INCH (CONLEY) PIPE GUIDE

SCALE: 3/16

JACOB D WILLIAMS
STATE OF WASHINGTON
51722
REGISTERED
PROFESSIONAL ENGINEER

5/27/2020

DATE:
May 26, 2020

HANFORD RELEASE

DWG NUMBER	TITLE
DRAWING TRACEABILITY LIST	

REF NUMBER	TITLE
REFERENCES	
NEXT USED ON SHEET 1	

REV NO	DESCRIPTION
0	RELEASED PER EDT-882463
REVISIONS	

BLDG NO: 242-AL, 242AL-41

INDEX NO: 8407

CAUTION: NOT COMPLETE WITHOUT CURRENT CHANGE DOCUMENTS FROM DATABASE

	NAME	DATE	SIGNATURE
DRAFTER	W T ARNDT		
DRAFTING SUPERVISOR	H A MENDEZ		
ENGINEERING TECH REVIEWER	C C JOSLYN		
DESIGN ENGINEER	J D WILLIAMS		
DESIGN AUTHORITY	N W WILSON		

U.S. DEPARTMENT OF ENERGY
Office of River Protection

LERF BASIN 41
MECHANICAL
DETAILS

SIZE: F | DRAWING NUMBER: H-2-838765 | SHEET: 10 | REV: 00

SCALE: AS SHOWN

28470

SOC_TB_F.DWG (SEPTEMBER 2019)

NOTES:
FOR GENERAL NOTES SEE SHEET 1.

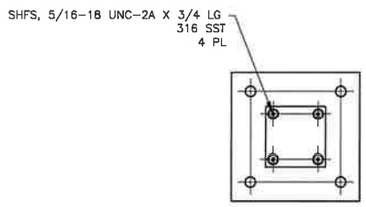

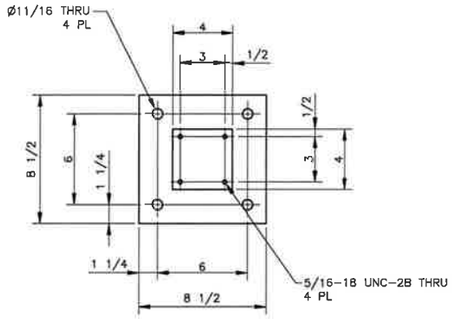

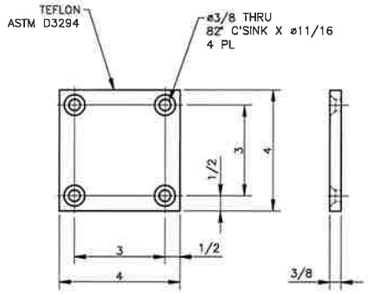

WEAR PLATE

SCALE: 1/2

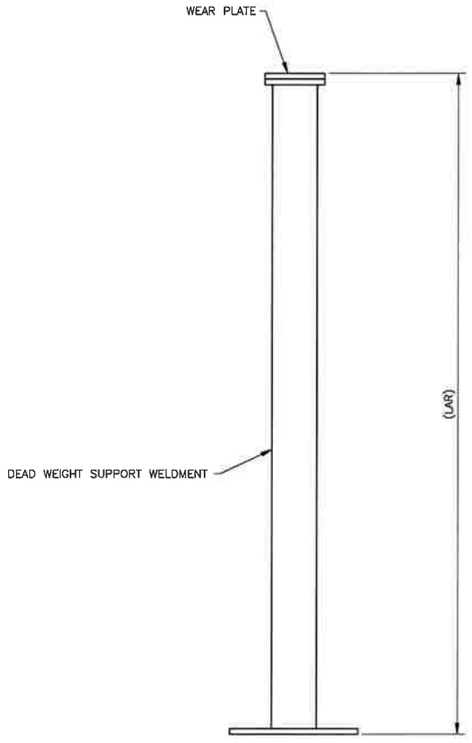

DEAD WEIGHT SUPPORT

SCALE: 1/4

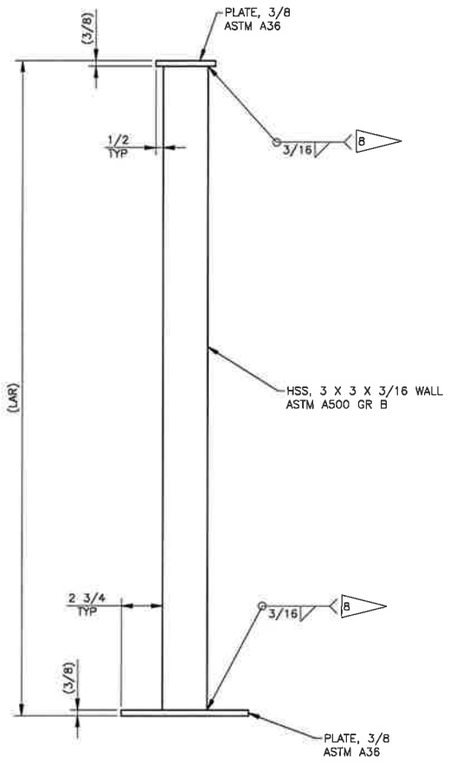

DEAD WEIGHT SUPPORT WELDMENT

SCALE: 1/4

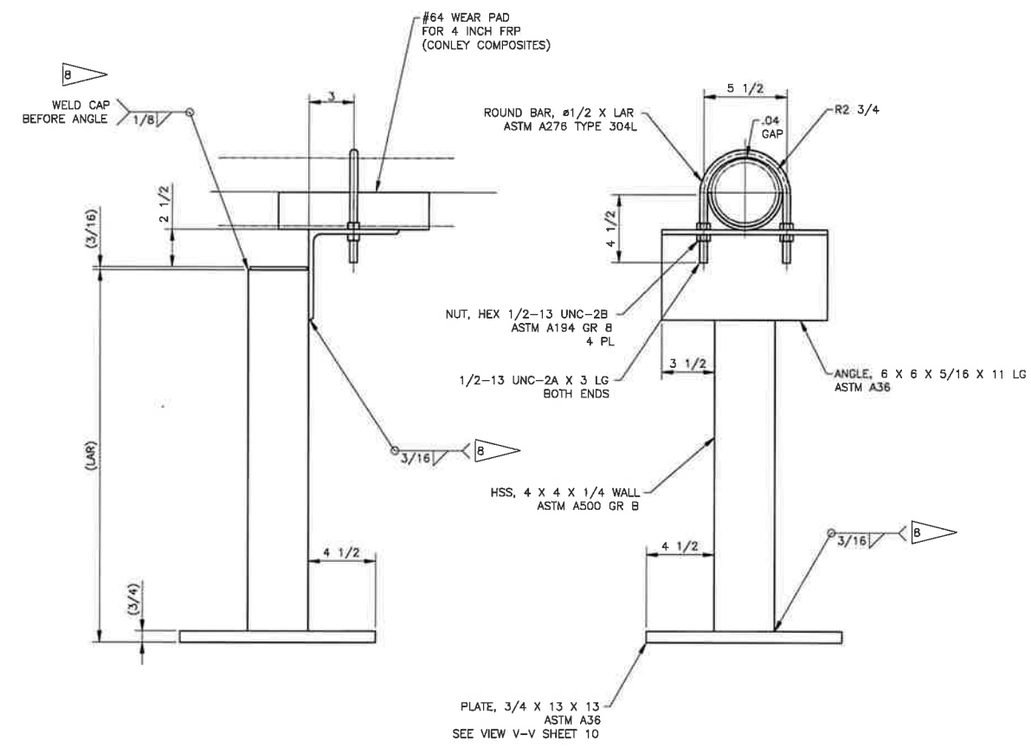

4 INCH (CONLEY) PIPE GUIDE

SCALE: 1 / 4

JACOB D WILLIAMS
STATE OF WASHINGTON
51722
REGISTERED
PROFESSIONAL ENGINEER

5/27/2020

DATE:
May 26, 2020
HANFORD RELEASE

DWG NUMBER	TITLE
DRAWING TRACEABILITY LIST	

REF NUMBER	TITLE
REFERENCES	
NEXT USED ON SHEET 1	

REV NO	DESCRIPTION
0	RELEASED PER EDT-882463
REVISIONS	

BLOCK NO 242-AL 242AL-41

BLOCK NO 8407

CAUTION: NOT COMPLETE WITHOUT CURRENT CHANGE DOCUMENTS FROM DATABASE

	NAME	DATE	SIGNATURE
DRAFTER	W Y ARNDT	05/26/20	
DRAFTING CHECKER	H A MENDEZ	05/26/20	
ENGINEERING TECH REVIEWER	C C JOSLYN	05/26/20	
DESIGN ENGINEER	J D WILLIAMS	05/26/20	
DESIGN AUTHORITY	N W WILSON	05/26/20	

U.S. DEPARTMENT OF ENERGY
Office of River Protection

LERF BASIN 41
MECHANICAL
DETAILS

SIZE F | DRAWING NUMBER H-2-838765 | SHEET 11 | REV 00

SCALE AS SHOWN

28477

OOC_TB_F.DWG (SEPTEMBER 2019)

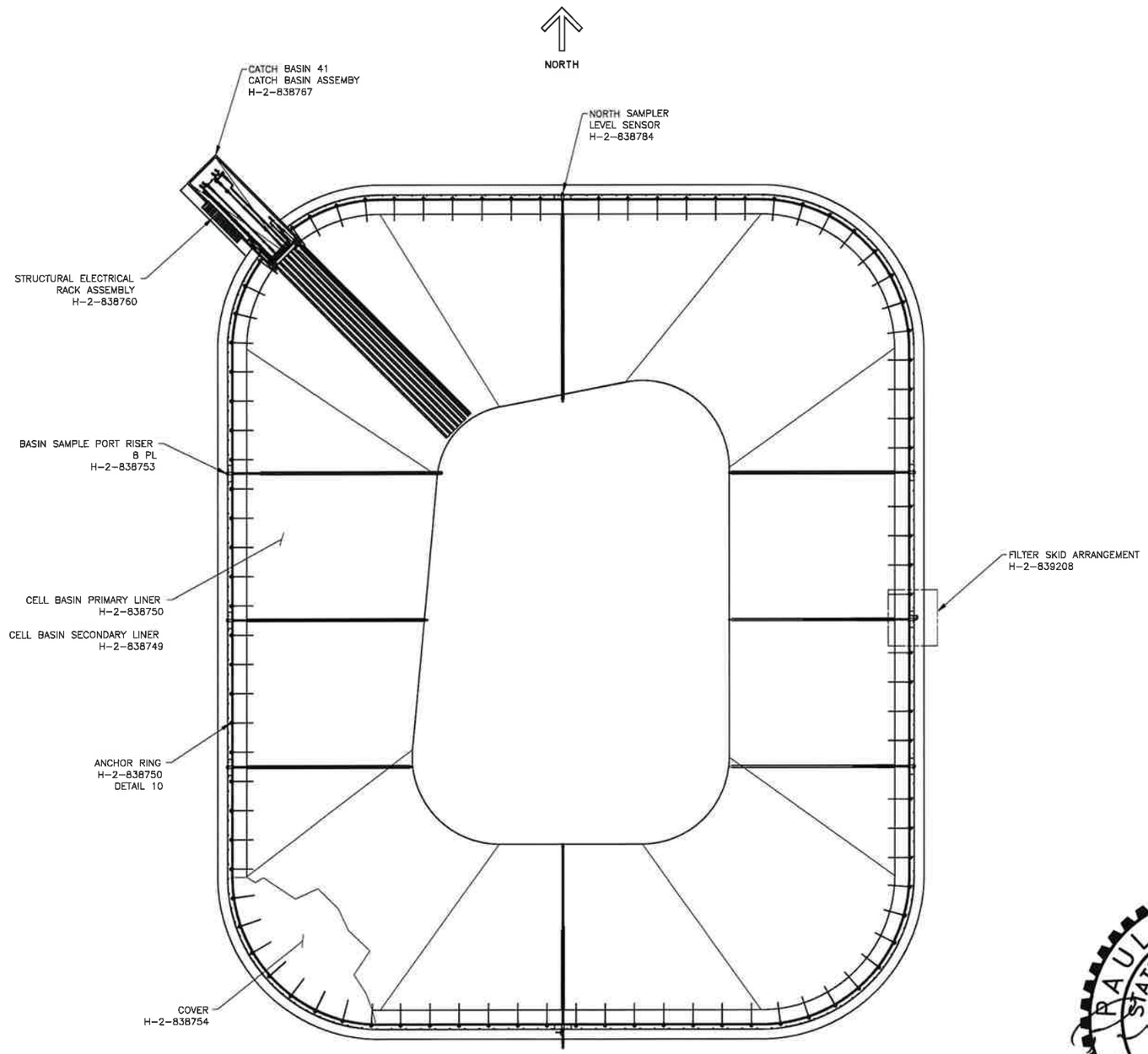

BASIN 41 GENERAL ARRANGEMENT

SCALE: NONE

5/26/2020

DATE:
May 26, 2020

HANFORD RELEASE

DWG NUMBER	TITLE
DRAWING TRACEABILITY LIST	

REF NUMBER	TITLE
H-15-38	LERF BASIN 41
H-2-838745	DRAWING LIST/TITLE SHEET
REFERENCES	
NEXT USED ON H-2-838765	

REV	DESCRIPTION
0	RELEASED PER EDT-882463
REVISIONS	

BLDG NO: 242-AL, 242AL-41

INDEX NO: 8407

CAUTION: NOT COMPLETE WITHOUT CURRENT CHANGE DOCUMENTS FROM DATABASE

	NAME	DATE	COMPANY
DRAWN BY	W T ARNDT	5/26/20	WRPS
DRAFTING DESIGNER	H A MENDEZ	5/26/20	WRPS
ENGINEERING TECH REVIEWER	C C JOSLYN	5/26/20	WRPS
DESIGN ENGINEER	P M DORSH	5/26/20	WRPS
DESIGN AUTHORITY	N W WILSON	5/26/20	WRPS

U.S. DEPARTMENT OF ENERGY
Office of River Protection

LERF BASIN 41
BASIN 41
GENERAL ARRANGEMENT

SIZE	DRAWING NUMBER	SHEET	REV
F	H-2-838766	1	00

SCALE: SHOWN

21272

DOC_TB_F.DWG (SEPTEMBER 2018)

GENERAL NOTES: (UNLESS OTHERWISE SPECIFIED)

1. DIMENSIONS ARE IN INCHES, TOLERANCES SHALL BE AS FOLLOWS:
   FRACTIONS = ±1/8" ANGLES = ±0.5° DECIMAL = .XX ±0.03 .XXX ±.010
2. REMOVE ALL BURRS AND BREAK SHARP EDGES.
3. GROUT PER CONSTRUCTION SPEC 63632, SECTION 03 30 00, MAX 1" THICK.
   ANCHOR ROD, 1/2" SST ASTM F593 TP 316, 2 3/4" MIN EMBED, 3 1/2" MAX EMBED. HILTI HIT-HY 200 ADHESIVE ANCHOR SYSTEM.
4. FABRICATE, WELD, INSPECT, AND TEST PIPING IN ACCORDANCE WITH ASME B31.3, 2016 FOR CATEGORY NORMAL FLUID SERVICE. DESIGN PRESSURE IS 150 PSIG, AND DESIGN TEMPERATURE IS 150°F. HYDROSTATIC LEAK PRESSURE TEST TO 225 PSIG (-0/+25 PSIG). FABRICATION TEMPERATURE IS 50°F TO 120°F.
5. ALL MACHINED SURFACES SHALL BE 125 √ IN ACCORDANCE WITH ASME B46.1, 2009, UNLESS OTHERWISE SPECIFIED.
6. WELD AND INSPECT STRUCTURAL WELDS IN ACCORDANCE WITH AWS D1.1, 2015 STATICALLY LOADED CRITERIA. ALL WELDS SHALL BE VT ON FINAL PASS UNLESS OTHERWISE SPECIFIED. WELD PROCEDURES AND QUALIFICATIONS PER ASME B&PV CODE SECTION IX, 2017 ARE ACCEPTABLE.
7. FOR HDPE PIPE USE CLASS M-36 PIPING CODE AND FOR STAINLESS STEEL PIPE USE CLASS M-10 PIPING CODE. SEE CONSTRUCTION SPECIFICATION RPP-SPEC-63632 SECTION 40 40 00.
8. HDPE WELD.
9. PREPARE AND PAINT ALL EXPOSED CARBON STEEL SURFACES WITH PPG PSX700 OR EQUIVALENT. FINISH COLOR SHALL BE GRAY. APPLY PER MANUFACTURER'S SPECIFICATIONS. POWDER COATING IS AN ACCEPTABLE COATING SYSTEM.
10. THESE THREADED COMPONENTS ARE DESIGNATED AS PIPING CODE M-10 PER CONSTRUCTION SPECIFICATION RPP-SPEC-63632 SECTION 40 40 00. PERFORM HYDROSTATIC LEAK PRESSURE TEST IN ACCORDANCE WITH FLAG NOTE 4.

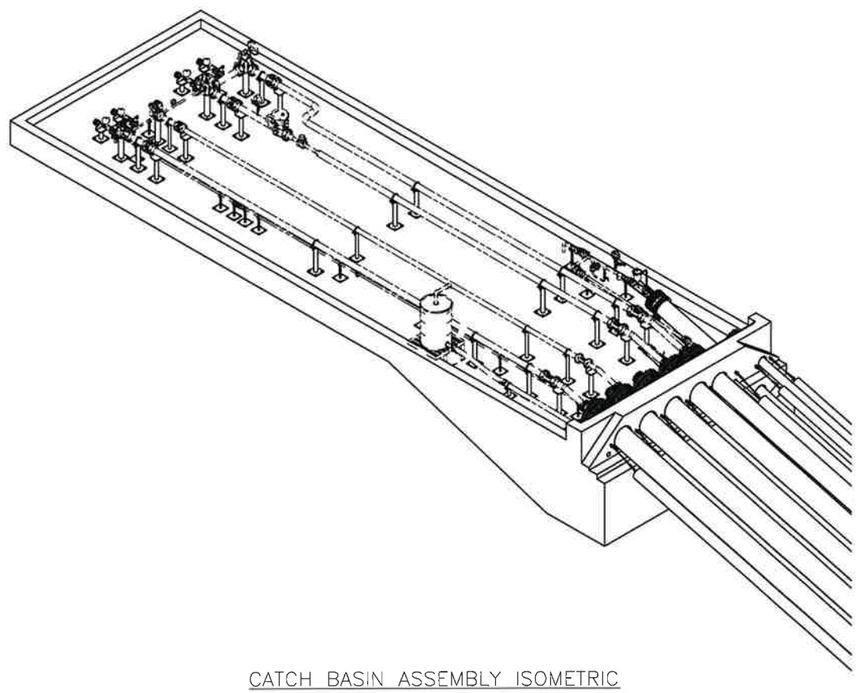

CATCH BASIN ASSEMBLY ISOMETRIC

SCALE: NONE

PARTS/MATERIAL LIST

QTY -090	QTY -080	QTY -070	QTY -060	QTY -050	QTY -040	QTY -030	QTY -020	QTY -010	PART/DASH NUMBER	NOMENCLATURE/DESCRIPTION	MATERIAL/REFERENCE	SHT	ITEM NO
									-010	CATCH BASIN ASSEMBLY		3	1
								1	-020	WTP/EMF EFFLUENT TIE IN WELDMENT		9	2
								1	-030	242A PROCESS CONDENSATE TIE IN WELDMENT		9	3
								1	-040	SPARE TIE IN WELDMENT		9	4
								1	-050	PUMP RECIRCULATION/TRANSFER TIE IN WELDMENT		9	5
								2	-060	3 INCH FLANGE MOUNT SUPPORT		10	6
								4	-070	1 INCH FLANGE MOUNT SUPPORT		10	7
								4	-080	VALVE SUPPORT ASSEMBLY		10	8
	1								-090	VALVE SUPPORT WELDMENT		10	9
								1	H-2-838771-010	CATCH BASIN PIPING			10
								1	H-2-838773-010	CATCH BASIN LEACHATE LEVEL PROBE			11
								1	H-2-838769-010	LEACHATE PUMP ASSEMBLY			12
								1	H-2-838768-010	BASIN PUMP ASSEMBLY			13
								1	H-2-838751-010	LERF CATCH BASIN 41			14
AR										PLATE, 3/8	ASTM A36		15
		AR	AR							PLATE, 1/4	ASTM A36		16
AR										HSS, 3 X 3 X 3/16 WALL	A500 GR B		17
								AR		ROUND BAR, 1/2 X LAR, TOE	ASTM A276 TP 304L		18
								AR		PIPE, 16 SDR 26	ASTM D3350 HDPE		19
								AR		PIPE, 14 SDR 26	ASTM D3350 HDPE		20
								AR		PIPE, 10 SDR 26	ASTM D3350 HDPE		21
								AR		PIPE, 8 SDR 26	ASTM D3350 HDPE		22
								AR		PIPE, 4 SDR 11	ASTM D3350 HDPE		23
								AR		PIPE, 6 SDR 26	ASTM D3350 HDPE		24
								AR		PIPE, 2 SDR 11	ASTM D3350 HDPE		25
								AR		PIPE, 1 1/2, SDR 11	ASTM D3350 HDPE		26
				AR	AR		AR			PIPE, 4 SCHED 40S	ASTM A312 GR TP 304L		27
						AR				PIPE, 3 SCHED 40S	ASTM A312 GR TP 304L		28
							AR			PIPE, 2 SCHED 40S	ASTM A312 GR TP 304L		29
						AR	AR			PIPE, 1 SCHED 40S	ASTM A312 GR TP 304L		30
								AR		PIPE, 1 SCHED 10S	ASTM A312 GR TP 304L		31
								2		END CAP, 3/4 THK	ASTM D3350 HDPE		32
								8		END STRIP, 1/2 THK	ASTM D3350 HDPE		33
								1	-001	FLANGE, 25 OD X 1 THK	ASTM D3350 HDPE	11	34
								3	-002	FLANGE, 25 OD X 1 THK	ASTM D3350 HDPE	11	35
								1	-003	FLANGE, 23 OD X 1 THK	ASTM D3350 HDPE	11	36
								1	-004	FLANGE, 18 OD X 1 THK	ASTM D3350 HDPE	11	37
								1	-005	FLANGE, 12 OD X 3/4 THK	ASTM D3350 HDPE	11	38
								1	-006	FLANGE, 6 OD X 3/4 THK	ASTM D3350 HDPE	11	39
	1								-007	WEAR PLATE, TEFLON, 3/8	ASTM D3294	11	40
								1		MOLDED FLANGE ADAPTER, 2 SDR 11	ASTM D3350 HDPE		41
								4		MOLDED STUB END, 16 SDR 26	ASTM D3350 HDPE		42
								1		MOLDED STUB END, 14 SDR 26	ASTM D3350 HDPE		43
								1		MOLDED STUB END, 10 SDR 26	ASTM D3350 HDPE		44
								1		MOLDED STUB END, 6 SDR 26	ASTM D3350 HDPE		45
								1		MOLDED STUB END, 4 SDR 11	ASTM D3350 HDPE		46
								1		MOLDED STUB END, 1 1/2 SDR 11	ASTM D3350 HDPE		47
								8		BACKING FLANGE, 16	ASTM A182 GR F 316L		48
								2		BACKING FLANGE, 14	ASTM A182 GR F 316L		49
								2		BACKING FLANGE, 10	ASTM A182 GR F 316L		50

(BOM CONTINUED ON SHEET 2)

PAUL M. DORSH — STATE OF WASHINGTON — 41918 — REGISTERED PROFESSIONAL ENGINEER

5/26/2020

DATE:
May 26, 2020
HANFORD RELEASE

DWG NUMBER	TITLE
DRAWING TRACEABILITY LIST	

REF NUMBER	TITLE
H-15-38	LERF BASIN 41
H-2-838745	DRAWING LIST/TITLE SHEET
REFERENCES	
NEXT USED ON H-2-838766	

REV	DESCRIPTION
0	RELEASED PER EDT-882463
REVISIONS	

BLOCK NO: 242-AL, 242AL-41
MODE NO: 8407

CAUTION: NOT COMPLETE WITHOUT CURRENT CHANGE DOCUMENTS FROM DATABASE

	NAME	DATE	COMPANY
DRAWN BY	W T ARNDT	05/26/2020	SGDS
PROJECT DESIGN	H A MENDEZ	05/26/2020	WRPS
CONSULTING TECH REVIEWER	C C JOSLYN	05/26/2020	WRPS
DESIGN VERIFIER	P M DORSH	05/26/2020	WRPS
DESIGN AUTHORITY	N W WILSON	05/26/2020	WRPS

U.S. DEPARTMENT OF ENERGY
Office of River Protection

LERF BASIN 41
CATCH BASIN
NOTES AND PARTS LIST

SIZE F | DRAWING NUMBER H-2-838767 | SHEET 1 | REV 00
SCALE SHOWN

29422 DOE_TB_F.DWG (SEPTEMBER 2016)

PARTS/MATERIAL LIST

QTY -090	QTY -080	QTY -070	QTY -060	QTY -050	QTY -040	QTY -030	QTY -020	QTY -010	PART/DASH NUMBER	NOMENCLATURE/DESCRIPTION	MATERIAL/REFERENCE	SHT	ITEM NO
								1	B3088S-1 1/2 X 22 3/8	SEISMIC BASE STAND	B-LINE		101
								1	B3088S-1 1/2 X 21 3/8	SEISMIC BASE STAND	B-LINE		102
								1	B3088S-1 1/2 X 5 7/8	SEISMIC BASE STAND	B-LINE		103
								2	B3088S-3/4 X 14 3/8	SEISMIC BASE STAND	B-LINE		104
								1	B3088S-3/4 X 13 3/8	SEISMIC BASE STAND	B-LINE		105
								1	B3088S-3/4 X 11 3/8	SEISMIC BASE STAND	B-LINE		106
								1	B3088S-3/4 X 10 7/8	SEISMIC BASE STAND	B-LINE		107
								1	B3088S-3/4 X 10 5/8	SEISMIC BASE STAND	B-LINE		108
								1	B3088S-3/4 X 10 1/4	SEISMIC BASE STAND	B-LINE		109
								1	B3088S-3/4 X 9 7/8	SEISMIC BASE STAND	B-LINE		110
								1	B3088S-3/4 X 8 1/2	SEISMIC BASE STAND	B-LINE		111
								1	P1000 HG	CHANNEL, 1 5/8 X 1 5/8 X 18 LG	UNISTRUT		112
								1	FLT93S-1B-1A201E-4CC00-00	FLEXSWITCH	FCI		113
								1	(9877K651)	SUCTION STRAINER, 2 MNPT	(MCMASTER-CARR)		114
								1	581-SS	STRAINER, 2 FNPT	MUELLER		115
								2	U3KSSMT.125SS	CHECK VALVE, 2 FNPT	CHECK -ALL VALVE		116
								2	P1566	PARALLEL PIPE CLAMP, 1	UNISTRUT		117
								AR	(8908T16)	WIRE ROPE, 3/16 DIA, 1 X 19, SST	MCMASTER-CARR		118
								8	(3061T18)	EYE NUT, 1/2-13 UNC-2B, SST	MCMASTER-CARR		119
								48	(1973N13)	ROPE CLAMP, 3/16, SST	MCMASTER-CARR		120
								16	(3868T24)	THIMBLE, 3/16, SST	MCMASTER-CARR		121
								20		STUD, 1-8 UNC-2A X 12 LG	ASTM A193 GR B8 CL2		122
								48		STUD, 1-8 UNC-2A X 7 1/4 LG	ASTM A193 GR B8 CL2		123
								8		STUD, 1-8 UNC-2A X 7 LG	ASTM A193 GR B8 CL2		124
								12		STUD, 7/8-9 UNC-2A X 6 LG	ASTM A193 GR B8 CL2		125
								4		STUD, 3/4-10 UNC-2A X 11 1/8 LG	ASTM A193 GR B8 CL2		126
								4		STUD, 3/4-10 UNC-2A X 5 3/8 LG	ASTM A193 GR B8 CL2		127
								12		STUD, 5/8-11 UNC-2A X 3 1/2 LG	ASTM A193 GR B8 CL2		128
								4		STUD, 5/8-11 UNC-2A X 3 1/4 LG	ASTM A193 GR B8 CL2		129
								8		STUD, 5/8-11 UNC-2A X 4 1/2 LG	ASTM A193 GR B8 CL2		130
								4		STUD, 1/2-13 UNC-2A X 2 1/2 LG	ASTM A193 GR B8 CL2		131
								6		HEX, BOLT 5/8-11 UNC-2A X 2 1/4 LG	ASTM A193 GR B8 CL2		132
								2		HEX BOLT, 5/8-11 UNC-2A X 2 LG	ASTM A193 GR B8 CL2		133
								8		HEX BOLT, 1/2-13 UNC-2A X 1 1/2 LG	ASTM A193 GR B8 CL2		134
								170		NUT, HEAVY HEX 1-8 UNC-2B	ASTM A194 GR 8		135
								80		NUT, HEX 1-8 UNC-2B	ASTM A194 GR 8		136
								24		NUT, HEAVY HEX 7/8-9 UNC-2B	ASTM A194 GR 8		137
								28		NUT, HEAVY HEX 3/4-10 UNC-2B	ASTM A194 GR 8		138
								40		NUT, HEX 5/8-11 UNC-2B	ASTM A194 GR 8		139
								16		NUT, HEX 1/2-13 UNC-2B	ASTM A194 GR 8		140
	4									SHFS, 5/16-18 UNC-2A X 3/4 LG	316 SST		141

PARTS/MATERIAL LIST

QTY -090	QTY -080	QTY -070	QTY -060	QTY -050	QTY -040	QTY -030	QTY -020	QTY -010	PART/DASH NUMBER	NOMENCLATURE/DESCRIPTION	MATERIAL/REFERENCE	SHT	ITEM NO
								2		BACKING FLANGE, 6	ASTM A182 GR F 316L		51
								1		BACKING FLANGE, 4	ASTM A182 GR F 316L		52
								1		BACKING FLANGE, 2	ASTM A182 GR F 304L		53
								2		BACKING FLANGE, 1 1/2	ASTM A182 GR F 316L		54
				1	1		1			FLANGE, 4 WN RF, CL150	ASTM A182 GR F 304L		55
						2				FLANGE, 3 WN RF, CL150	ASTM A182 GR F 304L		56
							1			FLANGE, 2 WN RF, CL150	ASTM A182 GR F 304L		57
						1	1			FLANGE, 1 WN RF CL150	ASTM A182 GR F 304L		58
					1	1	1			FLANGE, 16 BLIND RF CL150	ASTM A182 GR F 304L		59
				1						FLANGE, 14 BLIND RF CL150	ASTM A182 GR F 304L		60
								1		FLANGE, 6 BLIND RF CL150	ASTM A182 GR F 304L		61
								1		FLANGE, 4 BLIND RF CL150	ASTM A182 GR F 304L		62
								1		FLANGE, 3 BLIND RF CL150	ASTM A182 GR F 304L		63
								1		FLANGE, 2 BLIND RF CL150	ASTM A182 GR F 304L		64
								1		FLANGE, 1 BLIND RF CL150	ASTM A182 GR F 304L		65
								4		CLOSE NIPPLE, 2 NPT	ASTM A312 TP 304L		66
								1		COUPLING, 1 NPT, CL150	ASTM A351 304L		67
								1		TEE, 2 FNPT, CL150	ASTM A182 304L		68
								1		TEE, 1 NPT, CL150	ASTM A182 TP 304L		69
								1	3131 SERIES	UNION THREADPIECE, 2 FNPT	HART INDUSTRIES		70
								1	3131 SERIES	UNION TAILPIECE, 2 FNPT	HART INDUSTRIES		71
								1	(53015K45)	CAM AND GROOVE HOSE COUPLING, 2 MNPT	(MCMASTER CARR)		72
								1	(53015K850)	CAP, CAM AND GROOVE COUPLING, 2 INCH	(MCMASTER CARR)		73
								4		GASKET, 16 CL150, 3/16 THK	EPDM		74
								1		GASKET, 14 CL150, 3/16 THK	EPDM		75
								1		GASKET, 6 CL150, 3/16 THK	EPDM		76
								1		GASKET, 10 CL150, 3/16 THK	EPDM		77
								1		GASKET, 4 CL150, 1/8 THK	EPDM		78
								1		GASKET, 1/8 THK, 4 INCH, RF, CL150	GARLOCK		79
								1		GASKET, 1/8 THK, 3 INCH, RF, CL150	GARLOCK		80
								1		GASKET, 1/8 THK, 2 INCH RF, CL150	GARLOCK		81
								2		GASKET, 1/8 THK, 1 INCH, RF, CL150	GARLOCK		82
								3	B3094-4	FLANGE SUPPORT, 4 INCH	B-LINE		83
		4	2						B3094-4	FLANGE SUPPORT, 4 INCH (MODIFIED)	B-LINE		84
								9	B3090-4	PIPE SUPPORT, 4 INCH, W/ U-BOLT AND HEX NUTS	B-LINE		85
								4	B3090-3	PIPE SUPPORT, 3 INCH, W/ U-BOLT AND HEX NUTS	B-LINE		86
								4	B3090-1 1/2	PIPE SUPPORT, 1 1/2 INCH, W/ U-BOLT AND HEX NUTS	B-LINE		87
								3	B3090-1	PIPE SUPPORT, 1 INCH, W/ U-BOLT AND HEX NUTS	B-LINE		88
								2	B3088S-2 1/2 X 22 1/8	SEISMIC BASE STAND	B-LINE		89
								1	B3088S-2 1/2 X 21 5/8	SEISMIC BASE STAND	B-LINE		90
								1	B3088S-2 1/2 X 21 1/2	SEISMIC BASE STAND	B-LINE		91
								1	B3088S-2 1/2 X 21 3/16	SEISMIC BASE STAND	B-LINE		92
								1	B3088S-2 1/2 X 20 7/8	SEISMIC BASE STAND	B-LINE		93
								1	B3088S-2 1/2 X 20 5/8	SEISMIC BASE STAND	B-LINE		94
								3	B3088S-2 1/2 X 20 1/4	SEISMIC BASE STAND	B-LINE		95
								1	B3088S-2 1/2 X 18 3/4	SEISMIC BASE STAND	B-LINE		96
								3	B3088S-2 1/2 X 18 3/8	SEISMIC BASE STAND	B-LINE		97
								3	B3088S-2 1/2 X 17 3/8	SEISMIC BASE STAND	B-LINE		98
								4	B3088S-2 1/2 X 6 5/8	SEISMIC BASE STAND	B-LINE		99
								2	B3088S-1 1/2 X 23	SEISMIC BASE STAND	B-LINE		100

(BOM CONTINUED FROM SHEET 1)

PAUL M. DORSH
STATE OF WASHINGTON
41918
REGISTERED
PROFESSIONAL ENGINEER

5/26/2020

DATE:
May 26, 2020
HANFORD RELEASE

DWG NUMBER	TITLE
DRAWING TRACEABILITY LIST	

REF NUMBER	TITLE
REFERENCES	
NEXT USED ON SHEET 1	

REV NO	DESCRIPTION
0	RELEASED PER EDT-882463
REVISIONS	

BLDG NO: 242-AL, 242AL-41

INDEX NO: 8407

CAUTION: NOT COMPLETE WITHOUT CURRENT CHANGE DOCUMENTS FROM DATABASE

	NAME	DATE	COMPANY
DRAFTER	W T ARNOT	5/26/2020	WRPS
DRAFTING CHECK	H A MENDEZ	5/26/2020	WRPS
ENGINEERING CHECK REVIEWER	C C JOSLYN	5/26/2020	WRPS
DESIGN ENGINEER	P M DORSH	5/26/2020	WRPS
DESIGN AUTHORITY	N W WILSON	5/26/2020	WRPS

U.S. DEPARTMENT OF ENERGY
Office of River Protection

LERF BASIN 41
CATCH BASIN
ISOMETRIC AND PARTS LIST

SIZE: F | DRAWING NUMBER: H-2-838767 | SHEET: 2 | REV: 00

SCALE: SHOWN

28534

DOE_RL_F.DWG (SEPTEMBER 2019)

NOTES:
FOR GENERAL NOTES AND PARTS/MATERIAL SEE SHEET 1 AND 2.

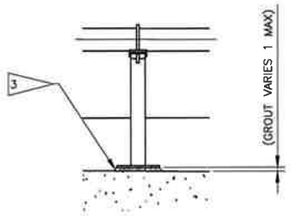

SECTION A–A
SCALE: 1 / 12
(TYPICAL SUPPORT GROUTING DETAIL)

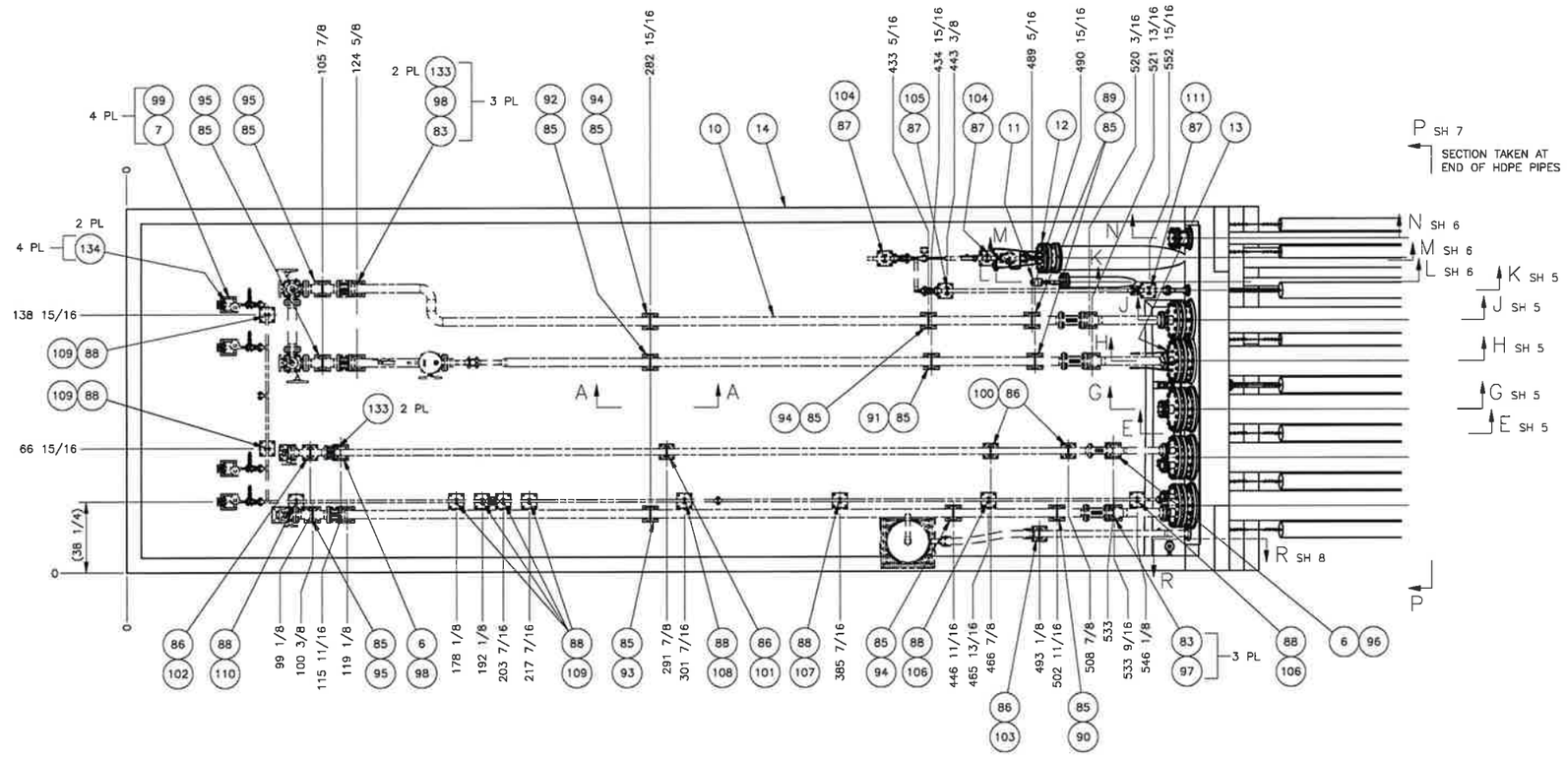

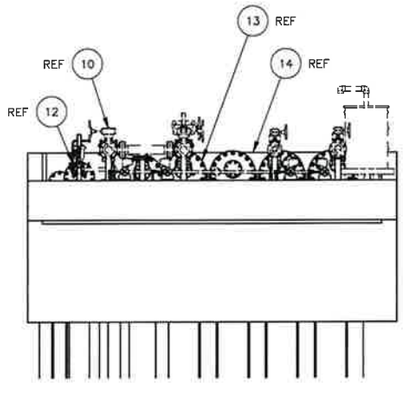

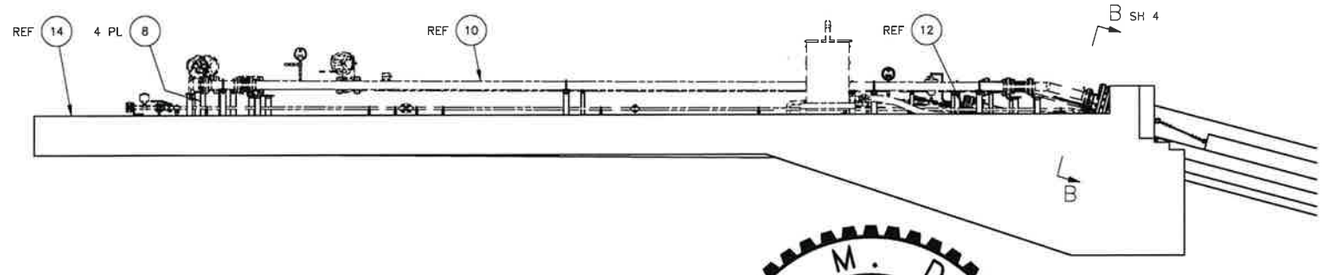

1 CATCH BASIN ASSEMBLY
SCALE: 1/32

STATE OF WASHINGTON
PAUL M. DORSH
41918
REGISTERED
PROFESSIONAL ENGINEER

5/26/2020

DATE:
May 26, 2020
HANFORD RELEASE

REV	DESCRIPTION
0	RELEASED PER EDT–882463

REVISIONS

DWG NUMBER	TITLE

DRAWING TRACEABILITY LIST

REF NUMBER	TITLE

REFERENCES
NEXT USED ON SHEET 1

CAUTION: NOT COMPLETE WITHOUT CURRENT CHANGE DOCUMENTS FROM DATABASE

BLDG NO 242–AL 242AL–41

INDEX NO 8407

	NAME	DATE	COMPANY
DRAWN BY	W T ARNDT		
DRAFTING CHECKER	H A MENDEZ		
ENGINEERING PEER REVIEWER	C C JOSLYN		
DESIGN ENGINEER	P M DORSH		
DESIGN AUTHORITY	N W WILSON		

U.S. DEPARTMENT OF ENERGY
Office of River Protection

LERF BASIN 41
CATCH BASIN
ASSEMBLY

SIZE	DRAWING NUMBER	SHEET	REV
F	H–2–838767	3	00

SCALE SHOWN

28547

DOC_TLE_F.DWG (SEPTEMBER 2018)

NOTES:
FOR GENERAL NOTES AND PARTS/MATERIAL SEE SHEET 1 AND 2.

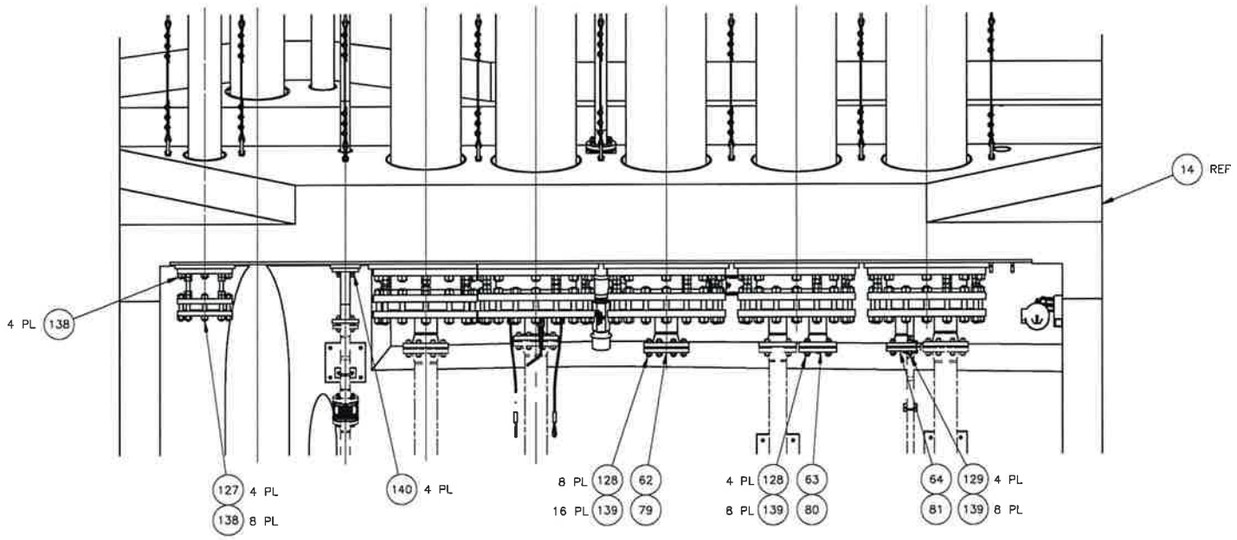

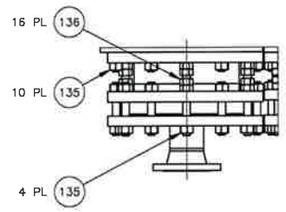

(SOME OBJECT FROM THIS VIEW REMOVED FOR CLARITY)

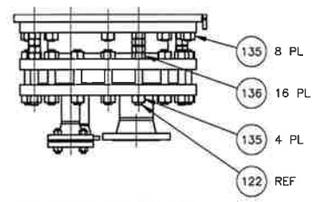

(SOME OBJECT FROM THIS VIEW REMOVED FOR CLARITY)

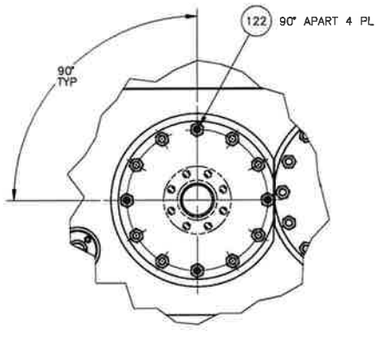

DETAIL C
SCALE: 1/8

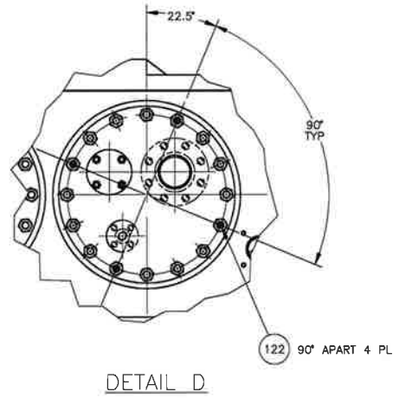

DETAIL D
SCALE: 1/8
(TYPICAL BOLTING 4 PLACES)

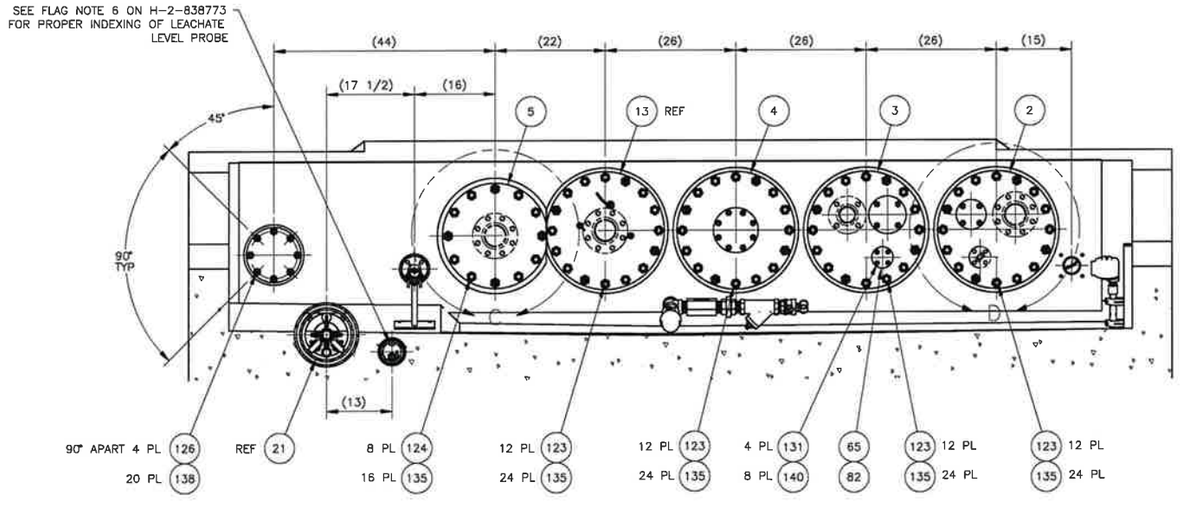

SECTION B–B
SCALE: 1/12
SHEET 3
(SOME ITEMS REMOVED FOR CLARITY)

PAUL M. DORSH
STATE OF WASHINGTON
41918
REGISTERED
PROFESSIONAL ENGINEER
5/26/2020

DATE:
May 26, 2020
HANFORD RELEASE

DWG NUMBER	TITLE
DRAWING TRACEABILITY LIST	

REF NUMBER	TITLE
REFERENCES	
NEXT USED ON SHEET 1	

REV NO	DESCRIPTION
0	RELEASED PER EDT-882463
REVISIONS	

BLDG NO 242-AL 242AL-41
INDEX NO 8407

CAUTION: NOT COMPLETE WITHOUT CURRENT CHANGE DOCUMENTS FROM DATABASE

	NAME	DATE	COMPANY
DRAWN	W T ARNDT	05/26/2020	WRPS
DRAFTING REVIEW	H A MENDEZ	05/26/2020	WRPS
ENGINEERING PEER REVIEWER	C C JOSLYN	05/26/2020	WRPS
DESIGN ENGINEER	P M DORSH	05/26/2020	WRPS
DESIGN AUTHORITY	N W WILSON	05/26/2020	WRPS

U.S. DEPARTMENT OF ENERGY
Office of River Protection

LERF BASIN 41
CATCH BASIN
SECTIONS AND DETAILS

SIZE F | DRAWING NUMBER H-2-838767 | SHEET 4 | REV 00
SCALE SHOWN

28555
DOE_TEL.F.DWG (SEPTEMBER 2016)

NOTES:

FOR GENERAL NOTES AND PARTS/MATERIAL SEE SHEET 1 AND 2.

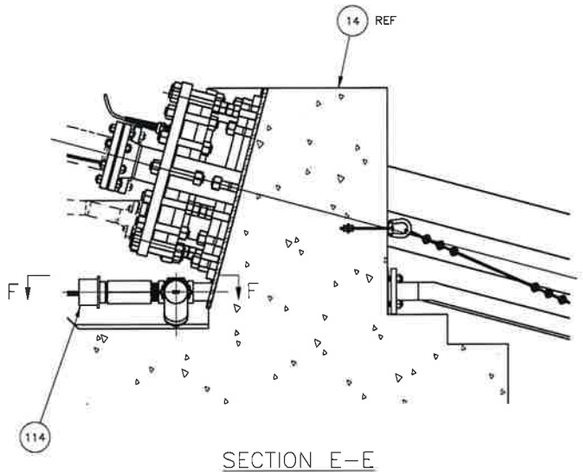

SECTION E–E

SCALE: 1/8
SHEET 3
(SOME OBJECTS REMOVED FOR CLARITY)

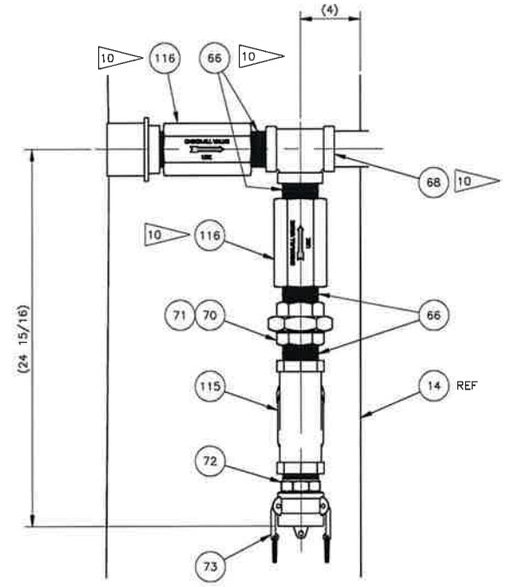

SECTION F–F

SCALE: 1/4
(SOME OBJECTS REMOVED FOR CLARITY)

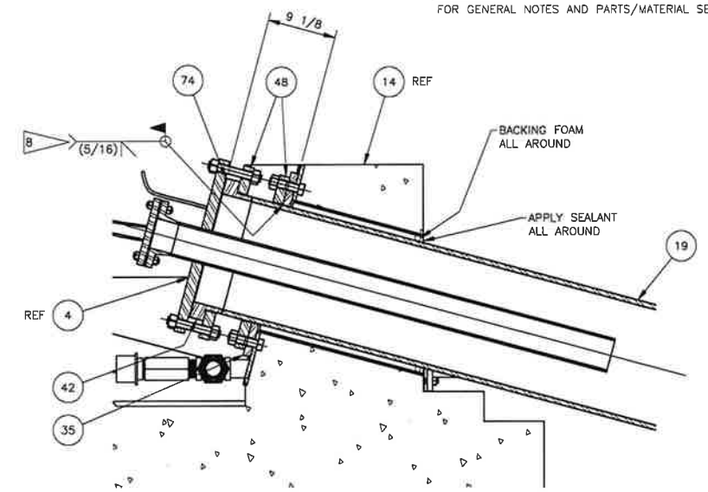

SECTION G–G

SCALE: 1/8
SHEET 3
(TYPICAL 16 INCH RISER 4 PL SOME OBJECTS
REMOVED FOR CLARITY)

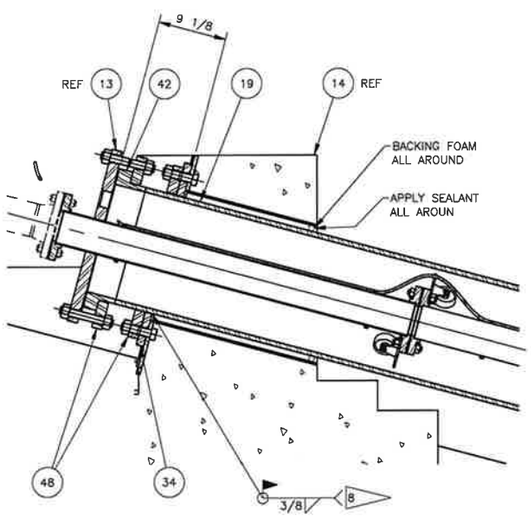

SECTION H–H

SCALE: 1/8
SHEET 3
(SOME OBJECTS REMOVED FOR CLARITY)

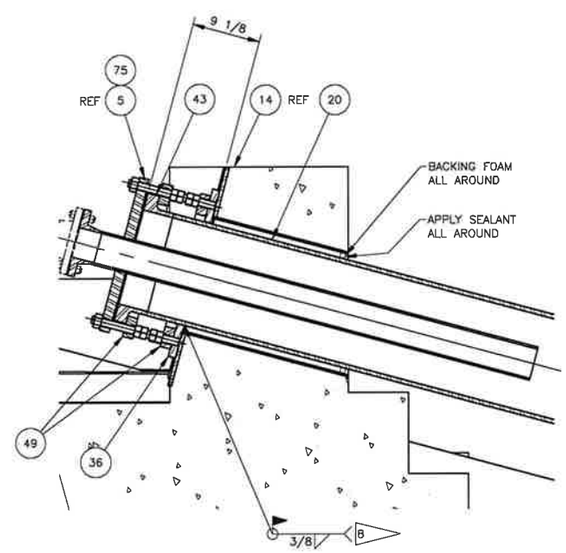

SECTION J–J

SCALE: 1/8
SHEET 3
(SOME OBJECTS REMOVED FOR CLARITY)

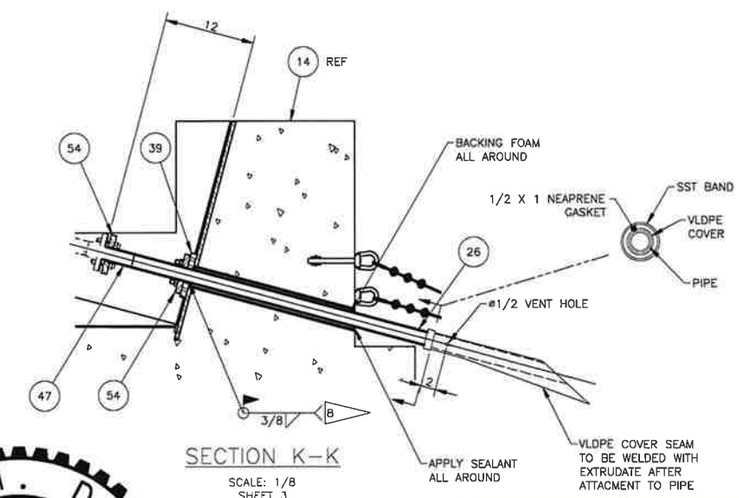

SECTION K–K

SCALE: 1/8
SHEET 3
(SOME OBJECTS REMOVED FOR CLARITY)

PAUL M. DORSH
STATE OF WASHINGTON
41918
REGISTERED
PROFESSIONAL ENGINEER

5/26/2020

DATE:
May 26, 2020
HANFORD RELEASE

DWG NUMBER	TITLE
DRAWING TRACEABILITY LIST	

REF NUMBER	TITLE
REFERENCES	
NEXT USED ON SHEET 1	

REV NO	DESCRIPTION
0	RELEASED PER EDT–882463
REVISIONS	

BLDG NO: 242–AL, 242AL–41

INDEX NO: 8407

CAUTION: NOT COMPLETE WITHOUT CURRENT CHANGE DOCUMENTS FROM DATABASE

	NAME	DATE	COMPANY
DRAWN BY	W J ARNOT	05/26/2020	WRPS
DRAFTING CHECKER	H A MENDEZ	05/26/2020	WRPS
ENGINEERING TECH REVIEWER	C C JOSLYN	05/26/2020	WRPS
DESIGN CHECKER	P M DORSH	05/26/2020	WRPS
DESIGN AUTHORITY	N W WILSON	05/26/2020	WRPS

U.S. DEPARTMENT OF ENERGY
Office of River Protection

LERF BASIN 41
CATCH BASIN
SECTIONS

SIZE F | DRAWING NUMBER H–2–838767 | SHEET 5 | REV 00

SCALE SHOWN

29421

DOE_TB_F.DWG (SEPTEMBER 2016)

NOTES:
FOR GENERAL NOTES AND PARTS/MATERIAL SEE SHEET 1 AND 2.

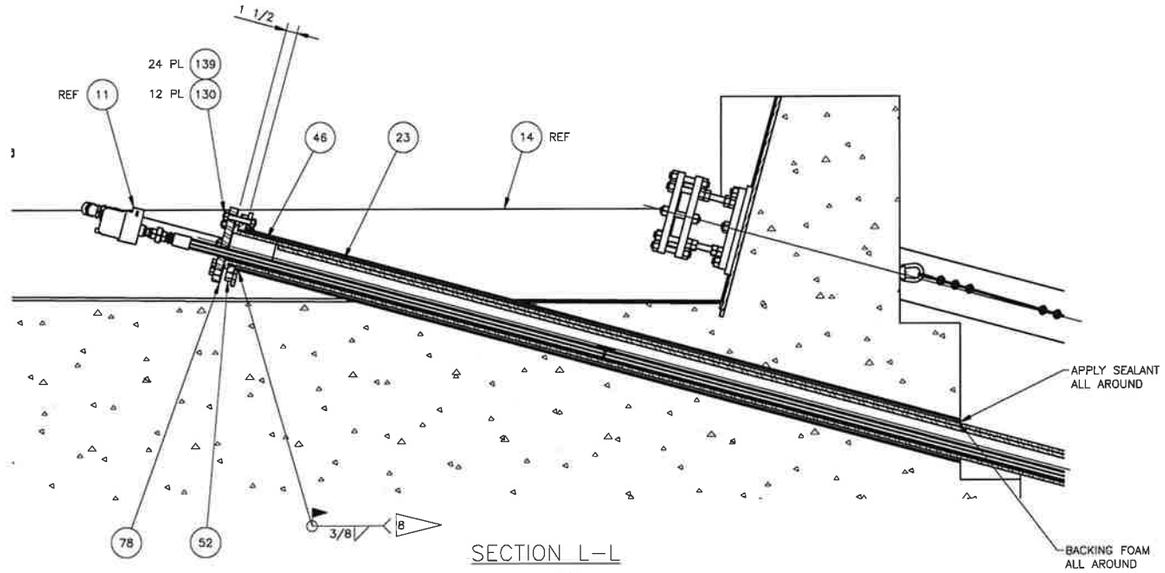

SECTION L–L
SCALE: 1/8
SHEET 3
(SOME OBJECTS REMOVED FOR CLARITY)

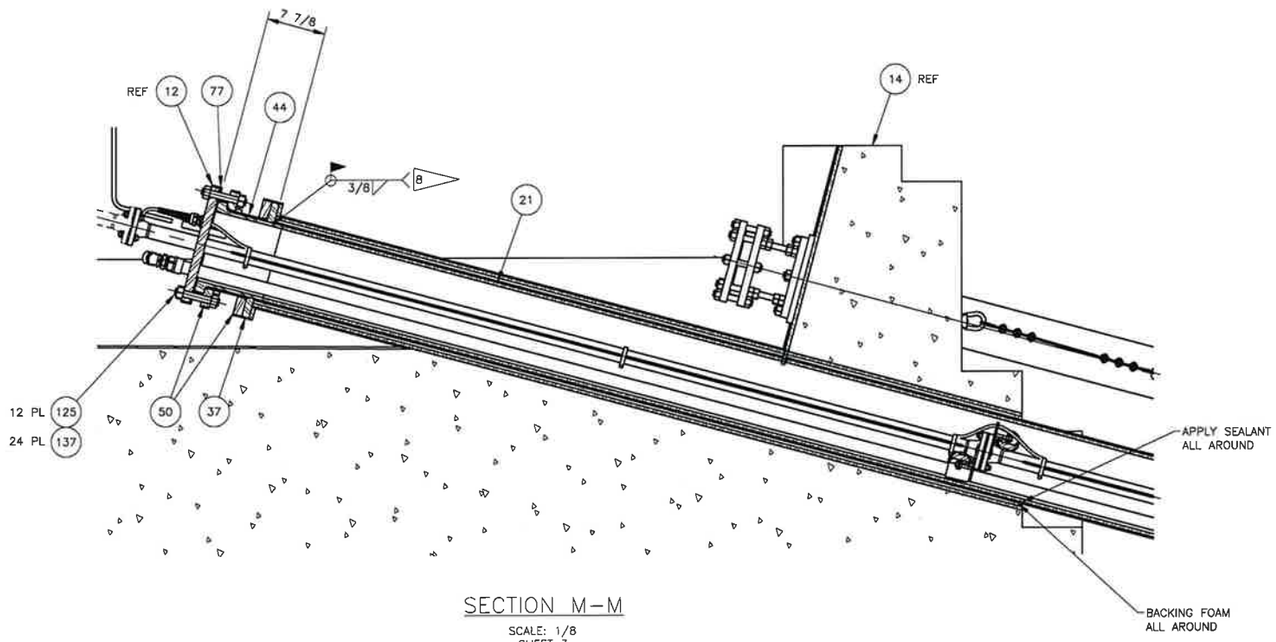

SECTION M–M
SCALE: 1/8
SHEET 3
(SOME OBJECT REMOVED FOR CLARITY)

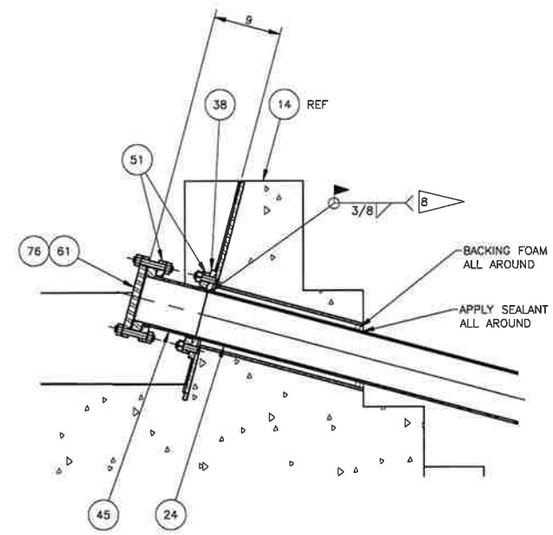

SECTION N–N
SCALE: 1/8
SHEET 3

PAUL M. DORSH
STATE OF WASHINGTON
41918
REGISTERED
PROFESSIONAL ENGINEER

5/26/2020

DATE:
May 26, 2020
HANFORD RELEASE

DWG NUMBER	TITLE
DRAWING TRACEABILITY LIST	

REF NUMBER	TITLE
REFERENCES	
NEXT USED ON SHEET 1	

REV NO	DESCRIPTION
0	RELEASED PER EDT–882463
REVISIONS	

BLDG NO: 242–AL, 242AL–41
INDEX NO: 8407

CAUTION: NOT COMPLETE WITHOUT CURRENT CHANGE DOCUMENTS FROM DATABASE

	NAME	DATE	COMPANY
DRAFTER	W L ARNDT	05/26/2020	WSPG
ENGINEERING DESIGNER	H A MENDEZ	05/26/2020	WSPG
ENGINEERING PEER REVIEWER	C C JOSLYN	05/26/2020	WSPG
DESIGN ENGINEER	P M DORSH	05/26/2020	WSPG
DESIGN AUTHORITY	N W WILSON	05/26/2020	WSPG

U.S. DEPARTMENT OF ENERGY
Office of River Protection

LERF BASIN 41
CATCH BASIN
SECTIONS

SIZE: F | DRAWING NUMBER: H–2–838767 | SHEET: 6 | REV: 00
SCALE: SHOWN

28552

DOC_TB_F.DWG (SEPTEMBER 2014)

NOTES:
FOR GENERAL NOTES AND PARTS/MATERIAL SEE SHEET 1 AND 2.

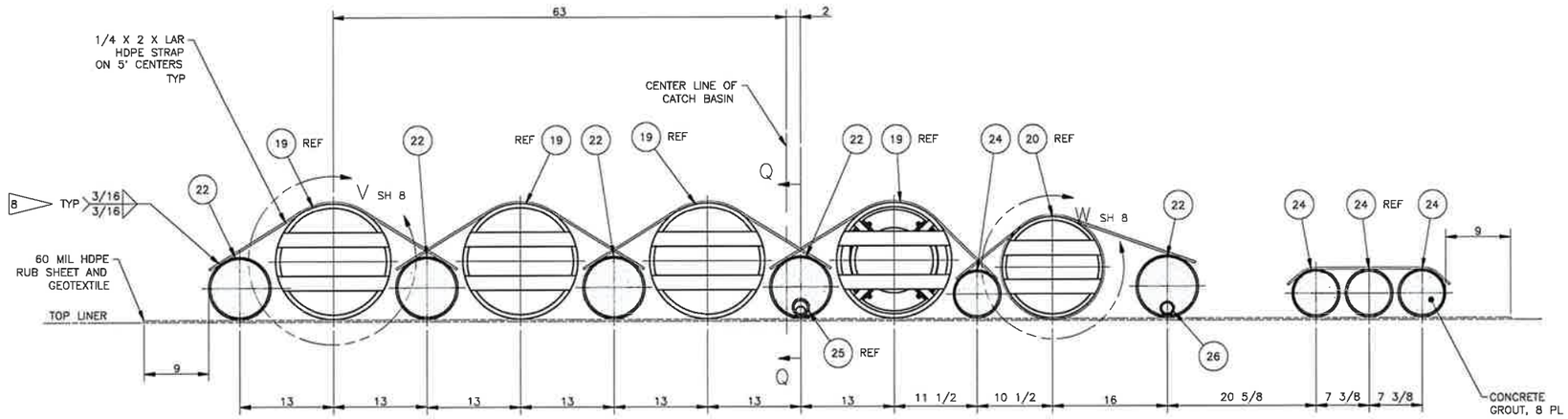

SECTION P–P

SCALE: 1/8
SHEET 3
(SOME OBJECTS REMOVED FOR CLARITY)

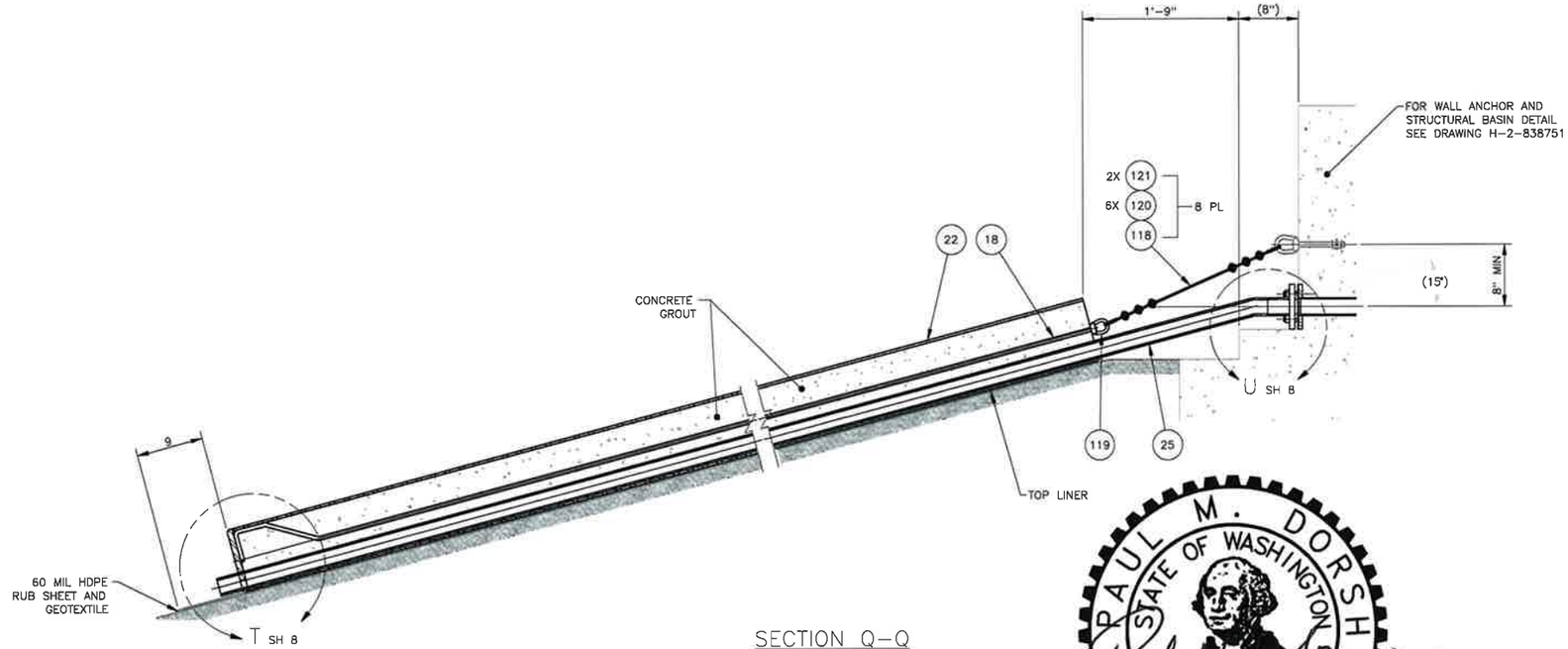

SECTION Q–Q

SCALE: 1/8

PAUL M. DORSH
STATE OF WASHINGTON
41918
REGISTERED
PROFESSIONAL ENGINEER

5/26/2020

DATE:
May 26, 2020
HANFORD RELEASE

DWG NUMBER	TITLE
DRAWING TRACEABILITY LIST	

REF NUMBER	TITLE
REFERENCES	
NEXT USED ON SHEET 1	

REV NO	DESCRIPTION
0	RELEASED PER EDT-882463
REVISIONS	

CAUTION: NOT COMPLETE WITHOUT CURRENT CHANGE DOCUMENTS FROM DATABASE

BLDG NO: 242-AL, 242AL-41

INDEX NO: 8407

	NAME	DATE	COMPANY
DRAFTER	W. T. ARNDT		
ENGINEERING DESIGN	H. A. MENDEZ		
ENGINEERING DESIGN REVIEWER	C. C. JOSLYN		
DESIGN ENGINEER	P. M. DORSH		
DESIGN AUTHORITY	N. W. WILSON		

U.S. DEPARTMENT OF ENERGY
Office of River Protection

LERF BASIN 41
CATCH BASIN
WELDMENTS

SIZE	DRAWING NUMBER	SHEET	REV
F	H-2-838767	7	00

SCALE SHOWN

2976B

DOE_RL_F.DWG (SEPTEMBER 2016)

NOTES:
FOR GENERAL NOTES AND PARTS/MATERIAL SEE SHEET 1 AND 2.

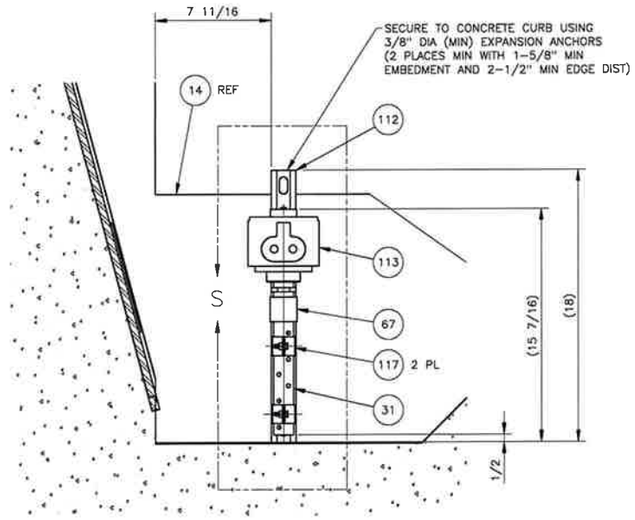

SECTION R-R
SCALE: 1 / 4
SHEET 3

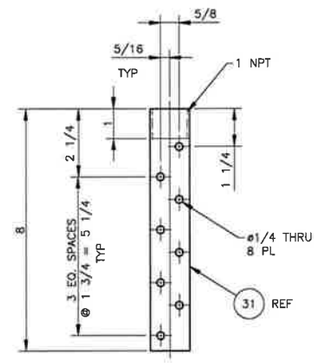

DETAIL S
SCALE: 1 / 2
(SOME OBJECTS REMOVED FOR CLARITY)

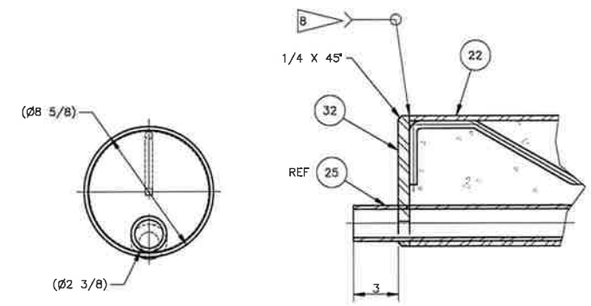

DETAIL T
SCALE: 1/4
SHEET 7

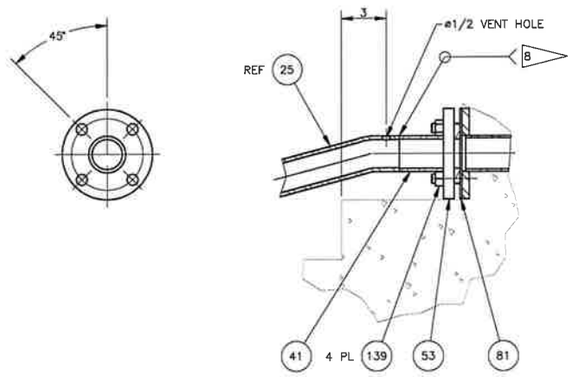

DETAIL U
SCALE: 1/4
SHEET 7

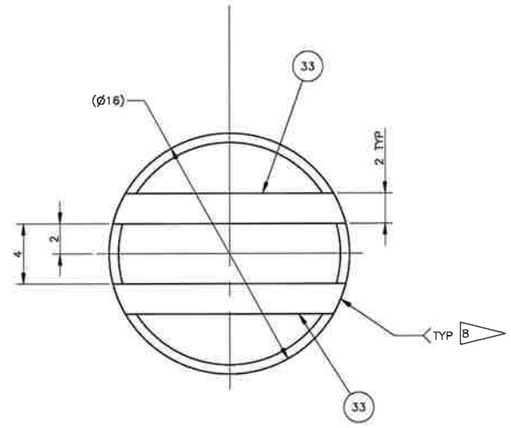

DETAIL V
SCALE: 1/4
SHEET 7
(TYPICAL 4 PLACES)
(SOME OBJECTS REMOVED FOR CLARITY)

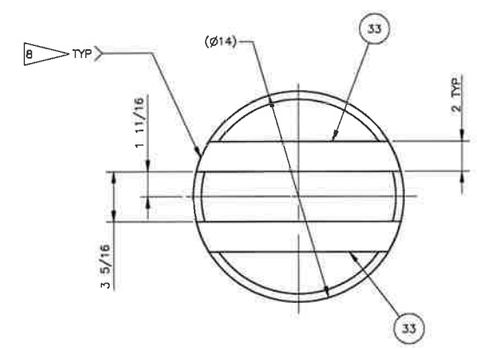

DETAIL W
SCALE: 1/4
SHEET 7
(SOME OBJECTS REMOVED FOR CLARITY)

PAUL M. DORSH
STATE OF WASHINGTON
41918
REGISTERED
PROFESSIONAL ENGINEER
5/26/2020

DATE:
May 26, 2020
HANFORD RELEASE

DWG NUMBER	TITLE
DRAWING TRACEABILITY LIST	

REF NUMBER	TITLE
REFERENCES	
NEXT USED ON SHEET 1	

REV NO	DESCRIPTION
0	RELEASED PER EDT-882463
REVISIONS	

BLDG NO 242-AL 242AL-41
INDEX NO 8407

CAUTION: NOT COMPLETE WITHOUT CURRENT CHANGE DOCUMENTS FROM DATABASE

	NAME	DATE	COMPANY
DRAFTER	W. T. ARNDT	05/26/2020	MSA
DRAFTING SUPVR	H. A. MENDEZ	05/26/2020	MSA
ENGINEERING PER REVIEWER	D. C. JOSLYN	05/26/2020	MSA
DESIGN ENGINEER	P. M. DORSH	05/26/2020	MSA
DESIGN AUTHORITY	N. W. WILSON	05/26/2020	MSA

U.S. DEPARTMENT OF ENERGY
Office of River Protection

LERF BASIN 41
CATCH BASIN
DETAILS

SIZE	DRAWING NUMBER	SHEET	REV
F	H-2-838767	8	00

SCALE SHOWN

28549

DOE_TB_F.DWG (SEPTEMBER 2016)

NOTES:
FOR GENERAL NOTES AND PARTS/MATERIAL SEE SHEET 1 AND 2.

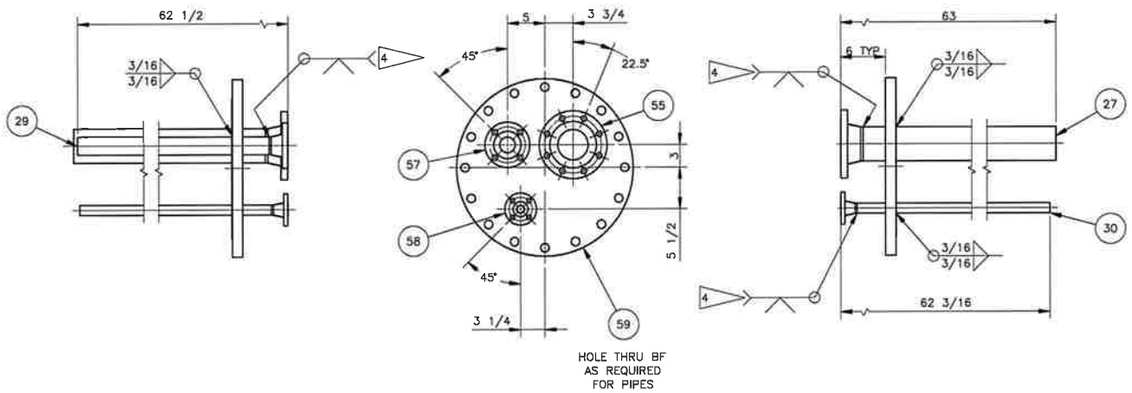

2 WTP/EMF EFFLUENT TIE IN WELDMENT
SCALE: 1/8

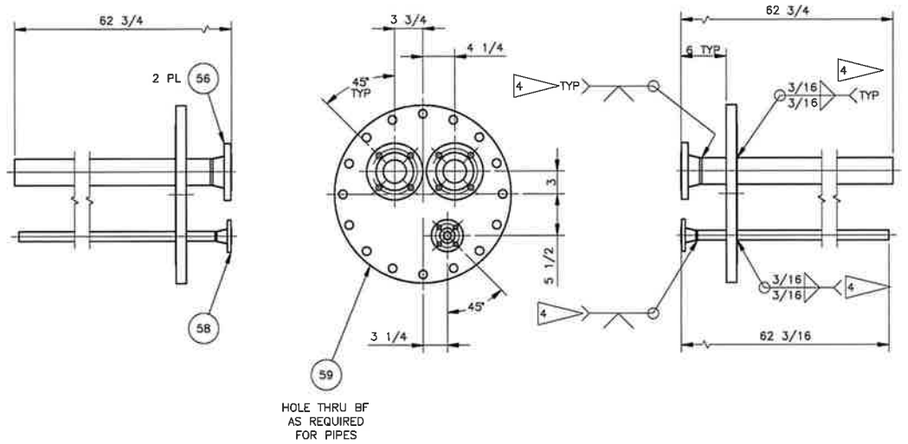

3 242A PROCESS CONDENSATE TIE IN WELDMENT
SCLAE: 1/8

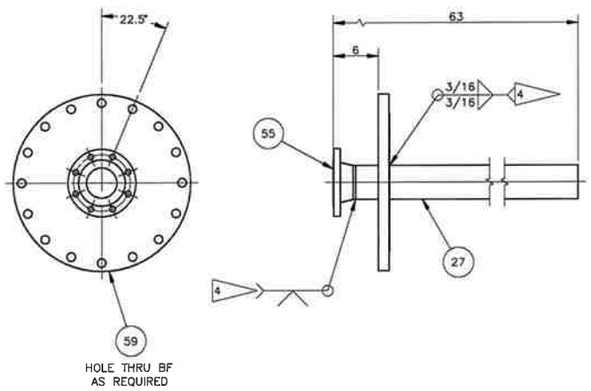

4 SPARE TIE IN WELDMENT
SCALE: 1/8

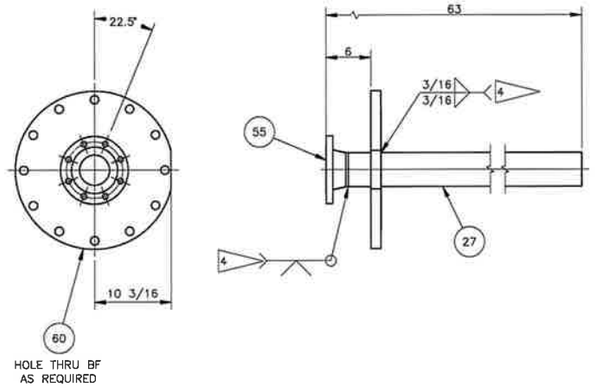

5 PUMP RECIRCULATION/TRANSFER TIE IN WELDMENT
SCALE: 1/8

DATE:
May 26, 2020
HANFORD RELEASE

DWG NUMBER	TITLE
DRAWING TRACEABILITY LIST	

REF NUMBER	TITLE
REFERENCES	
NEXT USED ON SHEET 1	

REV NO	DESCRIPTION
0	RELEASED PER EDT-882463
REVISIONS	

BLDG NO 242-AL 242AL-41
INDEX NO 8407

CAUTION: NOT COMPLETE WITHOUT CURRENT CHANGE DOCUMENTS FROM DATABASE

	NAME	DATE	COMPANY
DRAWN BY	D T ARNDT		
DRAFTING SUPERV	H A MENDEZ		
ENGINEERING PEER REVIEWER	C C JOSLYN		
DESIGN ENGINEER	P M DORSH		
DESIGN AUTHORITY	N W WILSON		

U.S. DEPARTMENT OF ENERGY
Office of River Protection

LERF BASIN 41
CATCH BASIN
DETAILS

SIZE	DRAWING NUMBER	SHEET	REV
F	H-2-838767	9	00

SCALE SHOWN

29757

DOE_TB_F.DWG (SEPTEMBER 2015)

NOTES:
FOR GENERAL NOTES AND PARTS/MATERIAL SEE SHEET 1 AND 2.

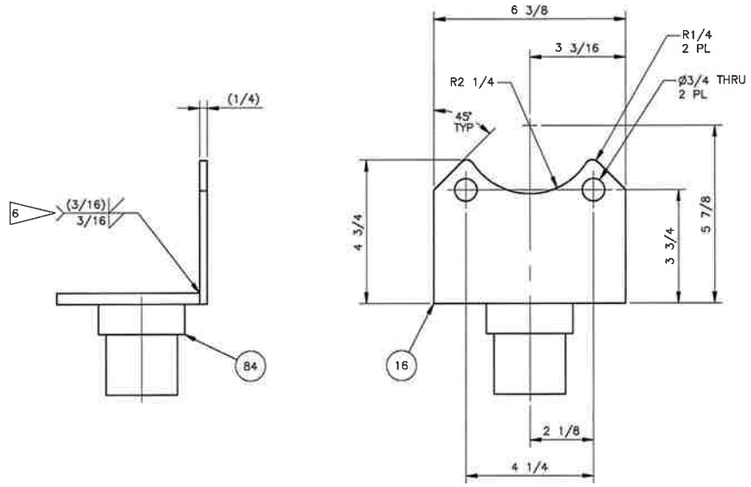

6 3 INCH FLANGE MOUNT SUPPORT
SCALE: 1/2

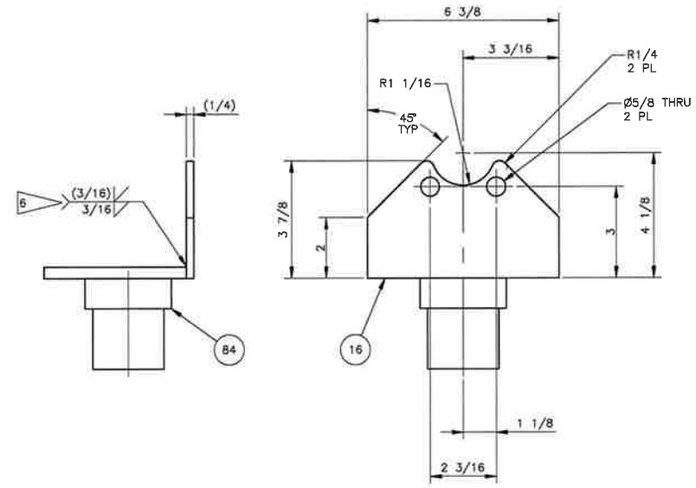

7 1 INCH FLANGE MOUNT SUPPORT
SCALE: 1/2

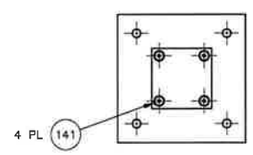

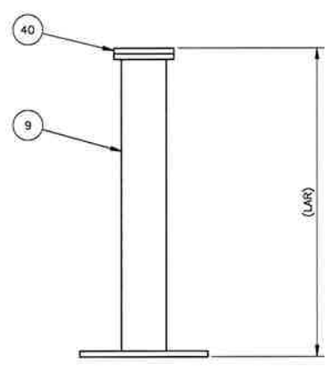

8 VALVE SUPPORT ASSEMBLY
SCALE: 1/4

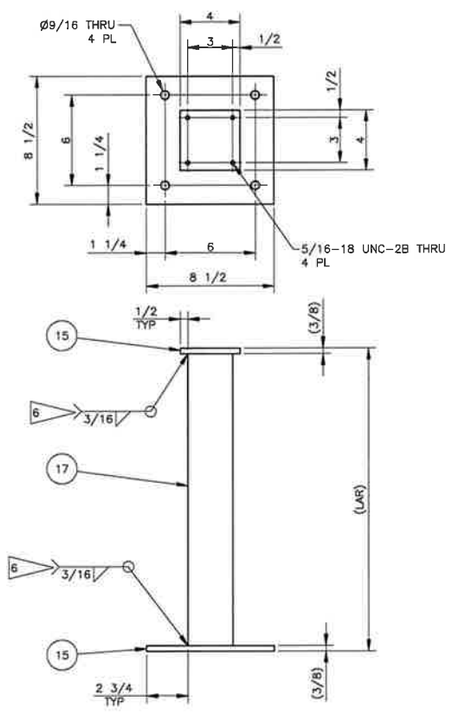

9 VALVE SUPPORT WELDMENT
SCALE: 1/4

PAUL M. DORSH
STATE OF WASHINGTON
41918
REGISTERED
PROFESSIONAL ENGINEER
5/26/2020

DATE:
May 26, 2020
HANFORD RELEASE

DWG NUMBER	TITLE
DRAWING TRACEABILITY LIST	

REF NUMBER	TITLE
REFERENCES	
NEXT USED ON SHEET 1	

REV NO	DESCRIPTION
0	RELEASED PER EDT-882463
REVISIONS	

BLDG NO 242-AL 242AL-41

INDEX NO 8407

CAUTION: NOT COMPLETE WITHOUT CURRENT CHANGE DOCUMENTS FROM DATABASE

	NAME	DATE	COMPANY
DRAWN BY	W. T. ARNDT	05/26/2020	WRPS
CRAFTSMAN CHECKER	H. A. MENDEZ	05/26/2020	WRPS
ENGINEERING PEER REVIEWER	C. C. JOSLYN	05/26/2020	WRPS
DESIGN ENGINEER	P. M. DORSH	05/26/2020	WRPS
DRAWN AUTHORITY	N. W. WILSON	05/26/2020	WRPS

U.S. DEPARTMENT OF ENERGY
Office of River Protection

LERF BASIN 41
CATCH BASIN
DETAILS

SIZE F | DRAWING NUMBER H-2-838767 | SHEET 10 | REV 00

SCALE: SHOWN

29758

DOE_RL_F.DWG (SEPTEMBER 2019)

NOTES:

FOR GENERAL NOTES AND PARTS/MATERIAL SEE SHEET 1 AND 2.

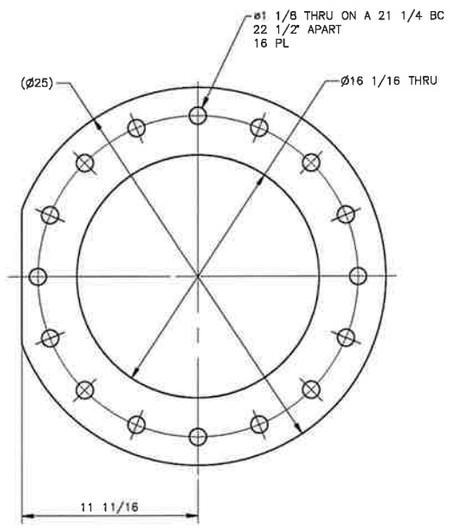

34 FLANGE
SCALE: 1/4

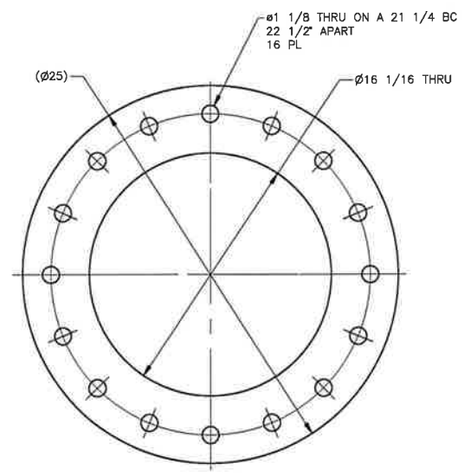

35 FLANGE
SCALE: 1/4

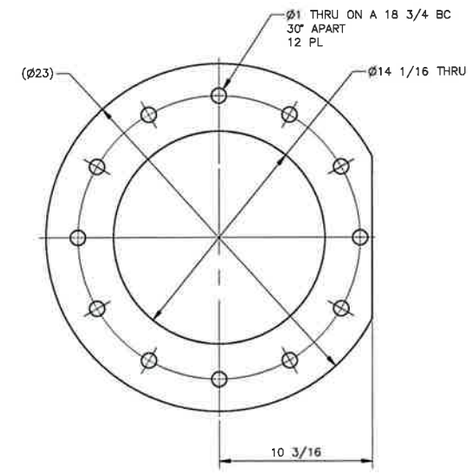

36 FLANGE
SCALE: 1/4

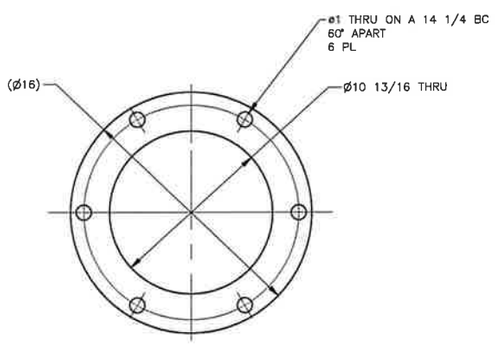

37 FLANGE
SCALE: 1/4

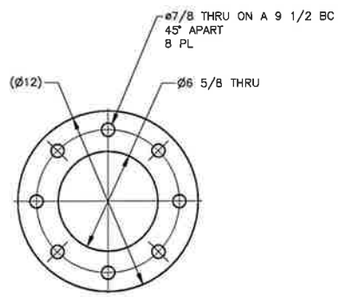

38 FLANGE
SCALE: 1/4

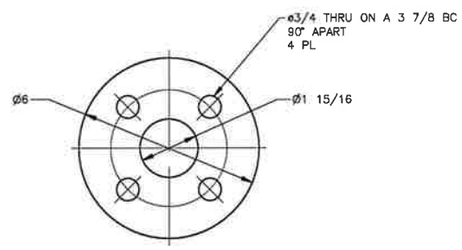

39 FLANGE
SCALE: 1/2

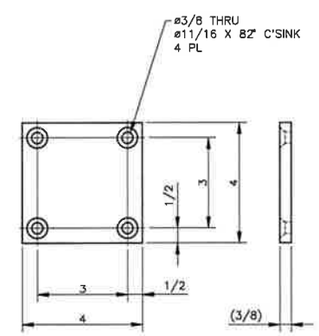

40 WEAR PLATE
SCALE: 1/2

PAUL M. DORSH
STATE OF WASHINGTON
41918
REGISTERED
PROFESSIONAL ENGINEER
5/26/2020

DATE:
May 26, 2020
HANFORD RELEASE

DWG NUMBER	TITLE
DRAWING TRACEABILITY LIST	

REF NUMBER	TITLE
REFERENCES	
NEXT USED ON SHEET 1	

REV NO	DESCRIPTION
0	RELEASED PER EDT-882463
REVISIONS	

BLDG NO 242-AL 242AL-41

INDEX NO 8407

CAUTION: NOT COMPLETE WITHOUT CURRENT CHANGE DOCUMENTS FROM DATABASE

	NAME	DATE	COMPANY
DRAWN BY	W T ARNDT	5/26/2020	WRPS
DRAFTING CHECKED	H A MENDEZ	5/26/2020	WRPS
ENGINEERING PEER REVIEWER	C C JOSLYN	5/26/2020	WRPS
DESIGN ENGINEER	P M DORSH	5/26/2020	WRPS
DESIGN AUTHORITY	N W WILSON	5/26/2020	WRPS

U.S. DEPARTMENT OF ENERGY
Office of River Protection

LERF BASIN 41
CATCH BASIN
DETAILS

SIZE	DRAWING NUMBER	SHEET	REV
F	H-2-838767	11	00

SCALE SHOWN

28541

DOE_TB_F.DWG (SEPTEMBER 2018)

GENERAL NOTES: (UNLESS OTHERWISE SPECIFIED)

1. DIMENSIONS ARE IN INCHES, TOLERANCES SHALL BE AS FOLLOWS:
   FRACTIONS = ±1/8" ANGLES = ±0.5° DECIMAL = .XX ±0.03 .XXX ±.010
2. REMOVE ALL BURRS AND BREAK SHARP EDGES.
3. FABRICATE, WELD, INSPECT, AND TEST PIPING IN ACCORDANCE WITH ASME B31.3, 2016 FOR CATEGORY NORMAL FLUID SERVICE. DESIGN PRESSURE IS 150 PSIG, AND DESIGN TEMPERATURE IS 150°F. HYDROSTATIC LEAK PRESSURE TEST TO 225 PSIG (-0/+25 PSIG). FABRICATION TEMPERATURE IS 50°F TO 120°F.
4. ALL MACHINED SURFACES SHALL BE 125√ IN ACCORDANCE WITH ASME B46.1, 2009, UNLESS OTHERWISE SPECIFIED.
5. WELD AND INSPECT STRUCTURAL WELDS IN ACCORDANCE WITH AWS D1.1, 2015 STATICALLY LOADED CRITERIA. ALL WELDS SHALL BE VT ON FINAL PASS UNLESS OTHERWISE SPECIFIED. WELD PROCEDURES AND QUALIFICATIONS PER ASME B&PV CODE SECTION IX, 2017 ARE ACCEPTABLE.
6. FOR B31.3 ANALYSIS SEE RPP-CALC-63779.
7. USE CLASS M-10 PIPING CODE SEE CONSTRUCTION SPECIFICATION RPP-SPEC-63632 SECTION 40 40 00.
8. DO NOT CABLE TIE WIRE ROPE. CABLE TIES ARE USED FOR POWER CABLE ONLY.

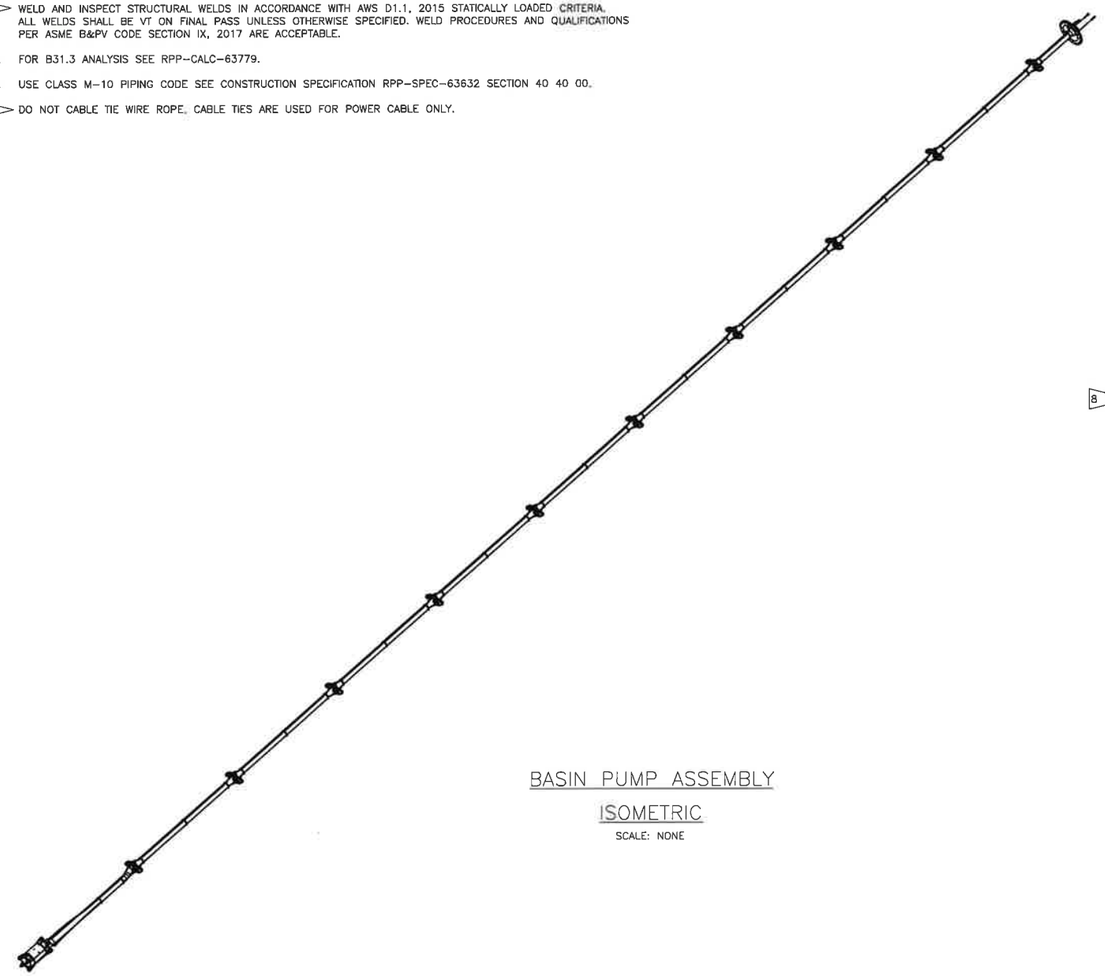

BASIN PUMP ASSEMBLY
ISOMETRIC
SCALE: NONE

PARTS/MATERIAL LIST

QTY -080	QTY -070	QTY -060	QTY -050	QTY -040	QTY -030	QTY -020	QTY -010	PART/DASH NUMBER	NOMENCLATURE/DESCRIPTION	MATERIAL/REFERENCE	SHT	ITEM NO
								-010	BASIN PUMP ASSEMBLY		2	1
							1	-020	PUMP ASSEMBLY		3	2
						1		-030	PIPE SPOOL		4	3
							1	-040	PIPE SPOOL		4	4
							9	-050	PIPE SPOOL		5	5
							1	-060	PIPE SPOOL		5	6
						2		-070	CARRIAGE WELDMENT		6	7
							20	-080	WHEEL SUPPORT WELDMENT		7	8
	1							-001	CARRIAGE BODY, 11 GA THK	ASTM A240 304L	10	9
	1							-002	CARRIAGE END PLATE, 1/4	ASTM A240 304L	9	10
	1							-003	CARRIAGE END PLATE, 1/4	ASTM A240 304L	9	11
	6							-004	SUPPORT PLATE, 1/4	ASTM A240 304L	11	12
4	8							-005	WHEEL BRACKET, 1/4 THK	ASTM A240 304L	11	13
					2			-006	LIFTING LUG, 3/8 THK	ASTM A240 TP 304L	11	14
						18		-007	SPACER, 1/2 THK	ASTM D3350 HDPE	11	15
					1			-008	COUPLING, 4 SW X FNPT	ASTM A182 F304L	10	16
		1						-009	FLANGE, 16 BLIND RF CL150	ASTM A182 F304L	8	17
		2	2	1					FLANGE, 4 SW RF CL150	ASTM A182 F304L		18
							10	BLUEGARD STYLE 3700	GASKET, 4 CL150, 1/8 THK	GARLOCK		19
				2					ELBOW, 4 45 DEG, LR, SCH 10S, BW	ASTM A403 WPS 304L		20
		AR	AR	AR	AR				PIPE, 4 SCH 10S	ASTM A312 TP 304L		21
1								-006	PLATE, 1/4	ASTM A240 304L	7	22
						1		SM4H65-X10	SUBMERSIBLE PUMP W/200 FT CABLE	GORMAN-RUPP		23
						2			BANDING, 3/4 X .033 THK W/ CLAMP, SST			24
							1	CGB398	CORD GRIP, 1 MNPT	EATON		25
							2	CGB116	CORD GRIP, 1/2 MNPT	EATON		26
							4	5128245	DUPLEX SLEEVE, 1/4	ESCO		27
							AR	TYS5442PX	LASHING CABLE TIE	THOMAS & BETTS		28
							2	S0116-SA10	SHACKLE, 3/8	SUNCOR STAINLESS		29
							4	1037292	STANDARD THIMBLE, WIRE ROPE	CROSBY		30
							AR	(3461T34)	WIRE ROPE, 1/4	(MCMASTER-CARR)		31
						8	40		WHEEL, 3 DIA	NYLON		32
						18			BOLT, HEX HEAD 1/4-20 UNC-2A X 1/2 LG	ASTM A193 GR B8 CL2		33
						8	40	(90298A63)	HEX SOCKET SHOULDER SCREW, 5/16-18 UNC-2A X 1 3/4 LG	(MCMASTER-CARR)		34
							80		STUD, 5/8-11 UNC-2A X 4 LG	ASTM A193 GR B8		35
						8	40		LOCKNUT, HEX 5/16-18 UNC 2-B	ASTM A194 GR 8		36
							160		NUT, HEAVY HEX 5/8-11 UNC-2B	ASTM A194 GR 8		37
						8	40		WASHER, FLAT 5/16	SS 304		38

PAUL M. DORSH — STATE OF WASHINGTON — 41918 — REGISTERED PROFESSIONAL ENGINEER
5/26/2020

DATE: May 26, 2020 — HANFORD RELEASE

DWG NUMBER	TITLE
DRAWING TRACEABILITY LIST	

REF NUMBER	TITLE
H-15-38	LERF BASIN 41
H-2-838745	DRAWING LIST/TITLE SHEET
REFERENCES	
NEXT USED ON H-2-838767	

REV	DESCRIPTION
0	RELEASED PER EDT-882463
REVISIONS	

BLDG NO: 242-AL, 242AL-41
INDEX NO: 2700

CAUTION: NOT COMPLETE WITHOUT CURRENT CHANGE DOCUMENTS FROM DATABASE

	NAME	DATE
DRAWN	F CHAVEZ	5/5/2020
DRAWING CHECK	W T ARNDT	5/5/2020
CALCULATING PEER REVIEWER	R E JOSLIN	5/5/2020
DESIGN ENGINEER	P M DORSH	5/5/2020
DESIGN AUTHORITY	N W WILSON	5/5/2020

U.S. DEPARTMENT OF ENERGY
Office of River Protection

LERF BASIN 41
BASIN PUMP
NOTES AND PARTS LIST

SIZE F | DRAWING NUMBER H-2-838768 | SHEET 1 | REV 00
SCALE SHOWN

29765 DOE_TB_F.DWG (SEPTEMBER 2014)

NOTES:
FOR GENERAL NOTES AND PARTS/MATERIAL SEE SHEET 1.

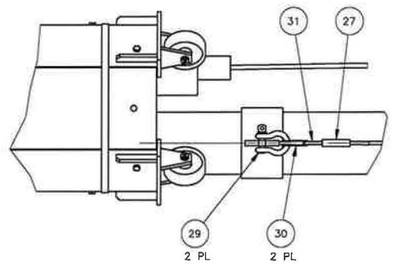

DETAIL A
SCALE: 1 / 4

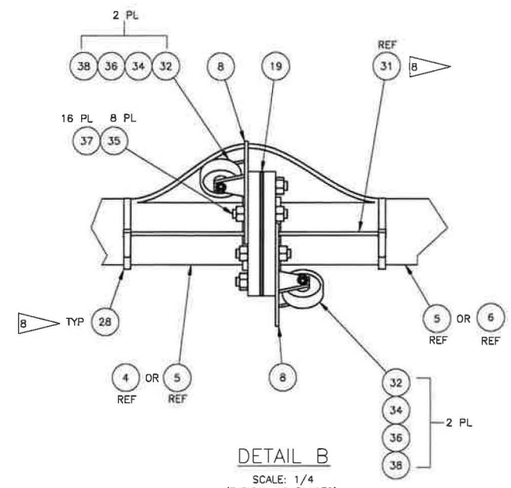

DETAIL B
SCALE: 1/4
(TYPICAL 10 PLACES)

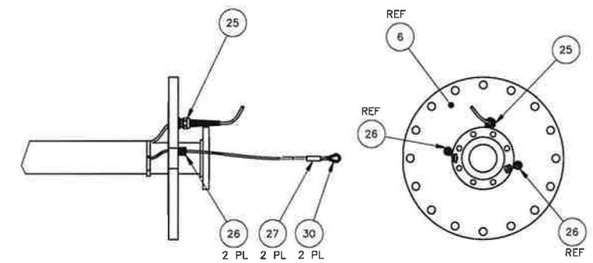

DETAIL C
SCALE: 1/8
(BOTH SIDES)
(ITEMS REMOVED FOR CLARITY)

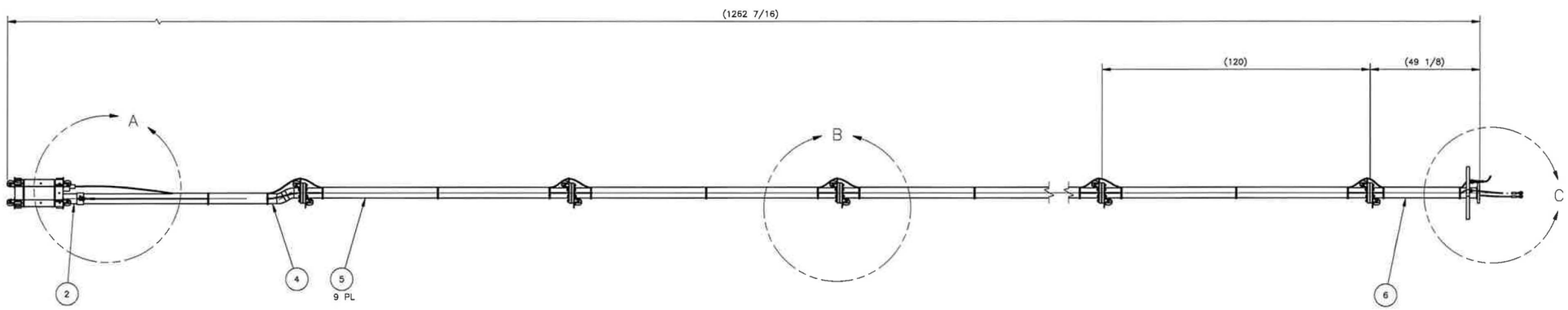

1 BASIN PUMP ASSEMBLY
SCALE: 1/12

DATE:
May 26, 2020
HANFORD RELEASE

PAUL M. DORSH
STATE OF WASHINGTON
41918
REGISTERED
PROFESSIONAL ENGINEER
5/26/2020

DWG NUMBER	TITLE
DRAWING TRACEABILITY LIST	

REF NUMBER	TITLE
REFERENCES	
NEXT USED ON SHEET 1	

REV NO	DESCRIPTION
0	RELEASED PER EDT-882463
REVISIONS	

BLDG NO 242-AL 242AL-41
INDEX NO 2800

CAUTION: NOT COMPLETE WITHOUT CURRENT CHANGE DOCUMENTS FROM DATABASE

	NAME	DATE	CONTRACT
DRAWN BY	F CHAVEZ	10/9/2020	MRPS
DESIGNER ENGINEER	W T ARNDT	10/9/2020	MRPS
CHECKED BY / DESIGN VERIFIER	G G JOSLYN	10/9/2020	MRPS
DESIGN AUTHORITY	N W WILSON	10/9/2020	MRPS

U.S. DEPARTMENT OF ENERGY
Office of River Protection

LERF BASIN 41
BASIN PUMP
ASSEMBLY

SIZE	DRAWING NUMBER	SHEET	REV
F	H-2-838768	2	00

SCALE SHOWN

28525 DOE_TB_F.DWG (SEPTEMBER 2016)

NOTES:
FOR GENERAL NOTES AND PARTS/MATERIAL SEE SHEET 1.

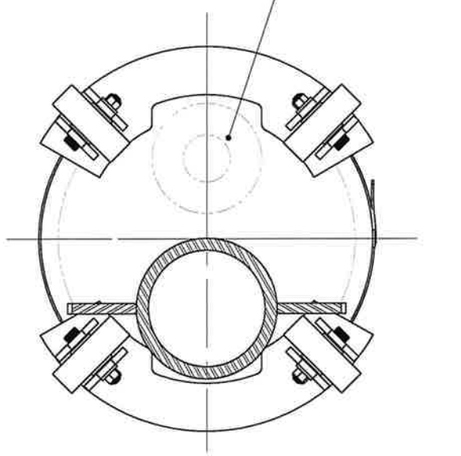

SECTION D–D
SCALE: 1 / 2

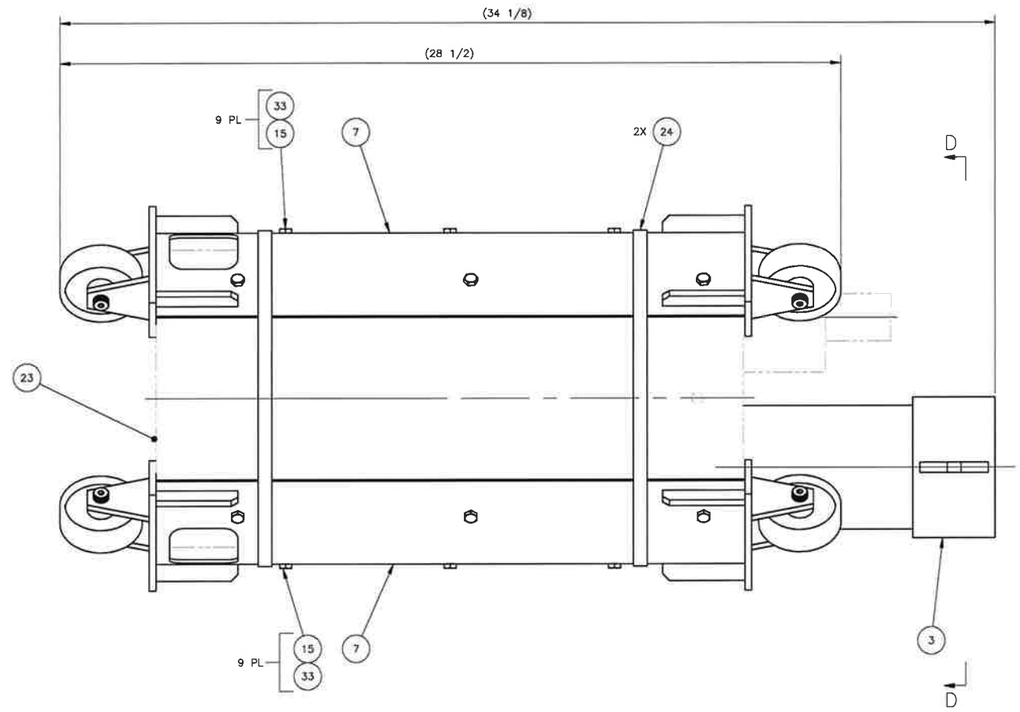

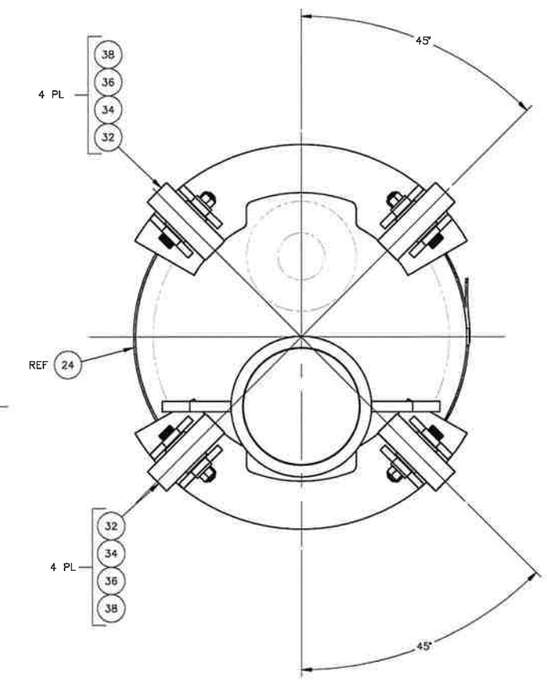

2 PUMP ASSEMBLY
SCALE: 1/4

PAUL M. DORSH
STATE OF WASHINGTON
41918
REGISTERED
PROFESSIONAL ENGINEER
5/26/2020

DATE:
May 26, 2020
HANFORD RELEASE

DWG NUMBER	TITLE
DRAWING TRACEABILITY LIST	

REF NUMBER	TITLE
REFERENCES	
NEXT USED ON SHEET 1	

REV	DESCRIPTION
0	RELEASED PER EDT–882463
REVISIONS	

BLDG NO: 242–AL, 242AL–41
INDEX NO: 2800

CAUTION: NOT COMPLETE WITHOUT CURRENT CHANGE DOCUMENTS FROM DATABASE

	NAME	DATE	COMPANY
DRAWN BY	F CHAVEZ	05/26/2020	MSPS
CHECKED BY	W T ARNDT	05/26/2020	MSPS
CHECKING PEER REVIEWER	C C JOSLYN	05/26/2020	MSPS
DESIGN ENGINEER	P M DORSH	05/26/2020	MSPS
DESIGN AUTHORITY	N W WILSON	05/26/2020	MSPS

U.S. DEPARTMENT OF ENERGY
Office of River Protection

LERF BASIN 41
BASIN PUMP
DETAILS

SIZE	DRAWING NUMBER	SHEET	REV
F	H–2–838768	3	00

SCALE SHOWN

29759 DOE_TBL.F.DWG (SEPTEMBER 2016)

NOTES:
FOR GENERAL NOTES AND PARTS/MATERIAL SEE SHEET 1.

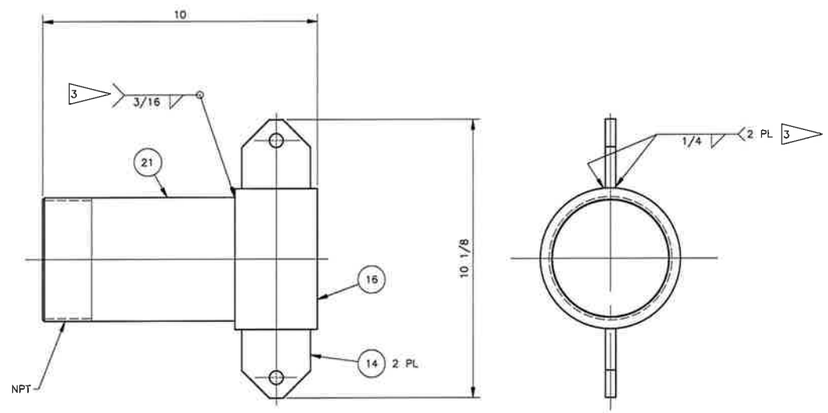

3 PIPE SPOOL
SCALE: 1/2

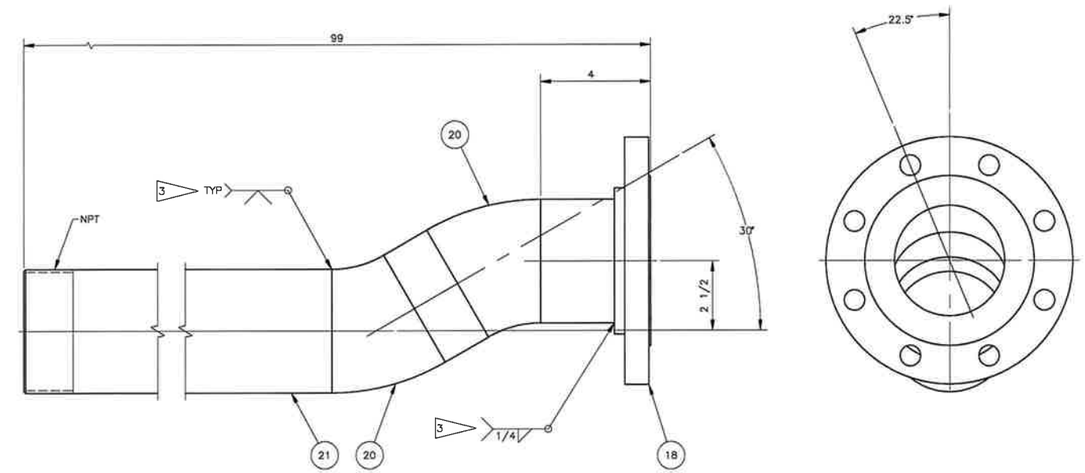

4 PIPE SPOOL
SCALE: 1/2

PAUL M. DORSH
STATE OF WASHINGTON
41918
REGISTERED
PROFESSIONAL ENGINEER
5/26/2020

DATE:
May 26, 2020
HANFORD RELEASE

DWG NUMBER	TITLE
DRAWING TRACEABILITY LIST	

REF NUMBER	TITLE
REFERENCES	
NEXT USED ON SHEET 1	

REV	DESCRIPTION
0	RELEASED PER EDT-882463
REVISIONS	

BLDG NO 242-AL 242AL-41
INDEX NO 2800

CAUTION: NOT COMPLETE WITHOUT CURRENT CHANGE DOCUMENTS FROM DATABASE

	NAME	DATE	COMPANY
DRAWN BY	F CHAVEZ	10/9/2019	WRPS
ENGINEERING REVIEW	W T ARNDT	10/9/2019	WRPS
CONSTRUCTION REVIEW	C C JOSLYN	10/11/2019	WRPS
DESIGN ENGINEER	P M DORSH	10/9/2019	WRPS
DESIGN AUTHORITY	N W WILSON	10/9/2019	WRPS

U.S. DEPARTMENT OF ENERGY
Office of River Protection

LERF BASIN 41
BASIN PUMP
ASSEMBLY AND SECTIONS

SIZE	DRAWING NUMBER	SHEET	REV
F	H-2-838768	4	00

SCALE SHOWN

29758 DOC_TB_F.DWG (SEPTEMBER 2019)

NOTES:
FOR GENERAL NOTES AND PARTS/MATERIAL SEE SHEET 1.

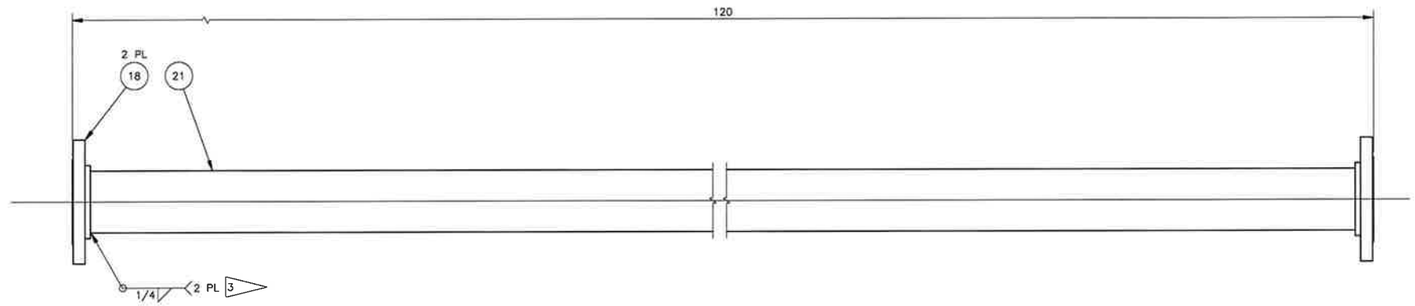

5 PIPE SPOOL
SCALE: 1/4

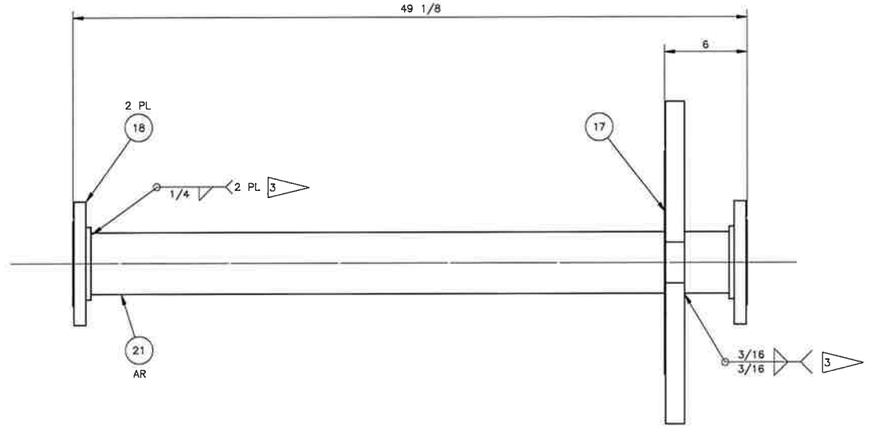

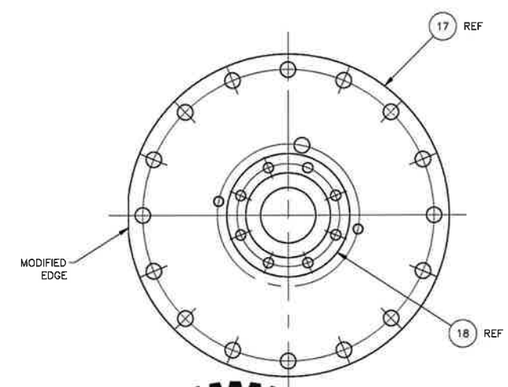

6 PIPE SPOOL
SCALE: 1/4

PAUL M. DORSH
STATE OF WASHINGTON
41918
REGISTERED
PROFESSIONAL ENGINEER
5/26/2020

DATE:
May 26, 2020
HANFORD RELEASE

DWG NUMBER	TITLE
DRAWING TRACEABILITY LIST	

REF NUMBER	TITLE
REFERENCES	
NEXT USED ON SHEET 1	

REV NO	DESCRIPTION
0	RELEASED PER EDT-882463

REVISIONS

BLDG NO 242-AL 242AL-41
INDEX NO 2700

CAUTION: NOT COMPLETE WITHOUT CURRENT CHANGE DOCUMENTS FROM DATABASE

	NAME	DATE	COMPANY
DRAFTER	F CHAVEZ	8/8/88	WRPS
DRAFTER CHECK	W T ARNDT	8/8/88	WRPS
ENGINEERING PEER REVIEWER	C C JOSLYN	8/8/88	WRPS
DESIGN ENGINEER	P M DORSH	8/8/88	WRPS
DESIGN AUTHORITY	N W WILSON	8/8/88	WRPS

U.S. DEPARTMENT OF ENERGY
Office of River Protection

LERF BASIN 41
BASIN PUMP
ASSEMBLY AND SECTIONS

SIZE	DRAWING NUMBER	SHEET	REV
F	H-2-838768	5	00

SCALE SHOWN

29760

NOTES:
FOR GENERAL NOTES AND PARTS/MATERIAL SEE SHEET 1.

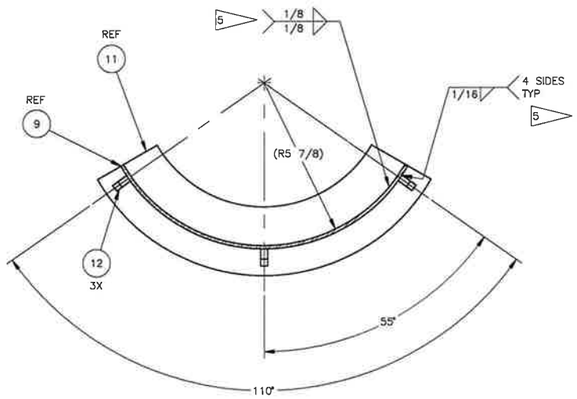

SECTION E–E
SCALE: 1 / 2

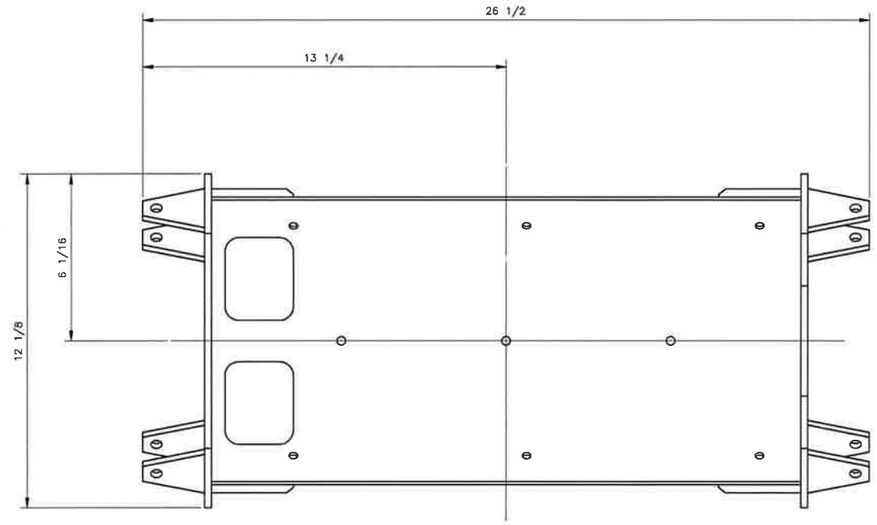

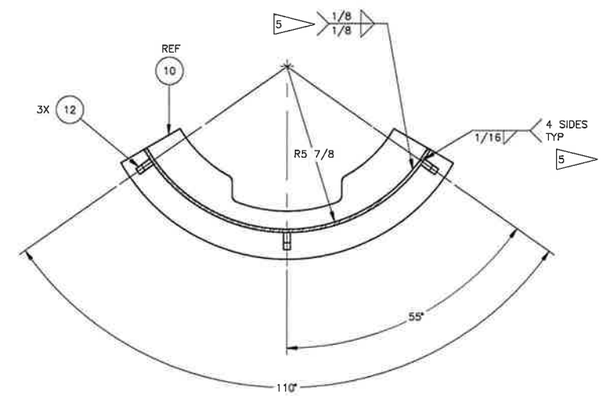

SECTION F–F
SCALE: 1 / 2

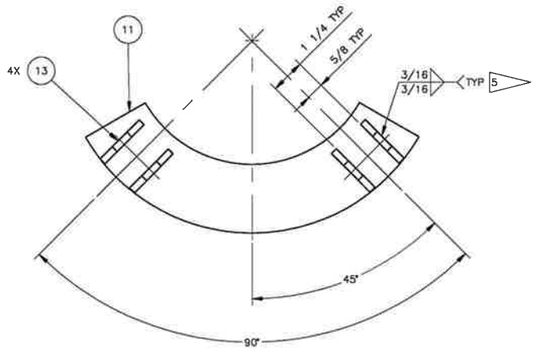

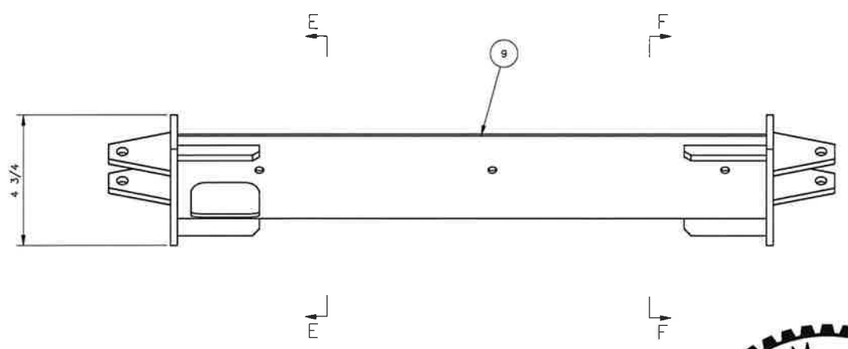

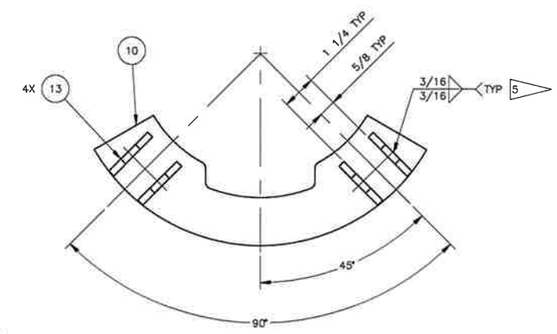

7 CARRIAGE WELDMENT
SCALE: 1/2

5/26/2020

DATE:
May 26, 2020
HANFORD RELEASE

DWG NUMBER	TITLE
DRAWING TRACEABILITY LIST	

REF NUMBER	TITLE
REFERENCES	
NEXT USED ON SHEET 1	

REV SYM	DESCRIPTION
0	RELEASED PER EDT–882463
REVISIONS	

BLDG NO 242–AL 242AL–41
INDEX NO 2800

CAUTION: NOT COMPLETE WITHOUT CURRENT CHANGE DOCUMENTS FROM DATABASE

	NAME	DATE	COMPANY
DRAFTER	F CHAVEZ	09/09/98	SDGN
DRAFTING CHECKER	W T ARNDT	09/09/98	WRPS
ENGINEERING DATA REVIEWER	C C JOSLYN	09/09/98	WRPS
DESIGN ENGINEER	P M DORSH	09/09/98	WRPS
DESIGN AUTHORITY	N W WILSON	09/09/98	WRPS

U.S. DEPARTMENT OF ENERGY
Office of River Protection

LERF BASIN 41
BASIN PUMP
ASSEMBLY AND SECTIONS

SIZE F | DRAWING NUMBER H–2–838768 | SHEET 6 | REV 00
SCALE SHOWN
28545
DOC_TEL_F.DWG (SEPTEMBER 2016)

NOTES:
FOR GENERAL NOTES AND PARTS/MATERIAL SEE SHEET 1.

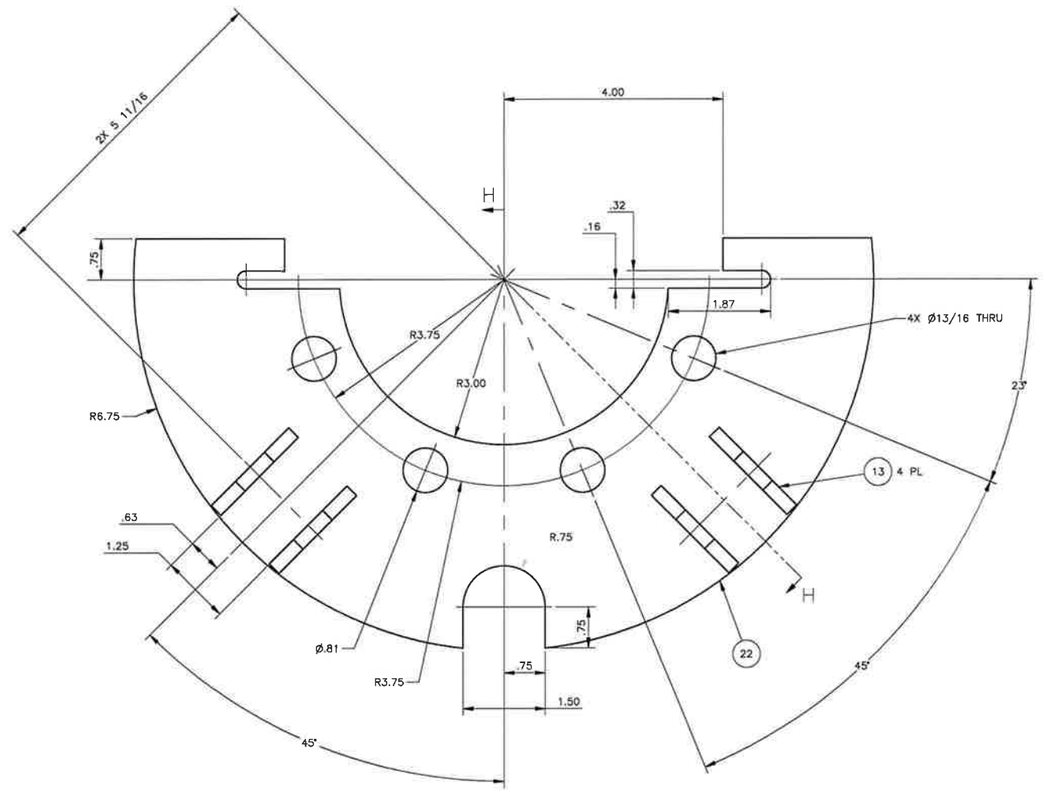

8 WHEEL SUPPORT WELDMENT
SCALE: 1/1

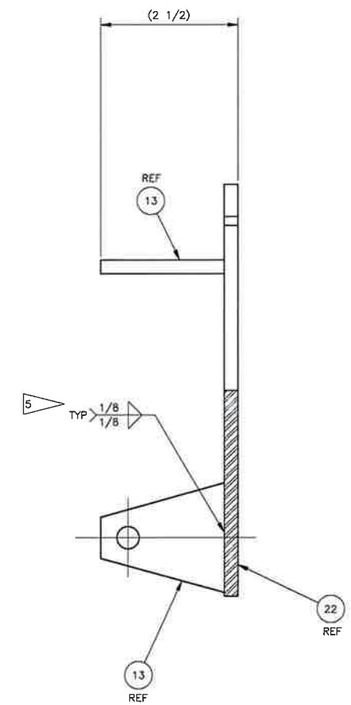

SECTION H–H
SCALE: 1/1

PAUL M. DORSH
STATE OF WASHINGTON
41918
REGISTERED
PROFESSIONAL ENGINEER
5/26/2020

DATE:
May 26, 2020
HANFORD RELEASE

DWG NUMBER	TITLE
DRAWING TRACEABILITY LIST	

REF NUMBER	TITLE
REFERENCES	
NEXT USED ON SHEET 1	

REV	DESCRIPTION
0	RELEASED PER EDT-882483
REVISIONS	

BLDG NO 242-AL 242AL-41
MODEL NO 2700

CAUTION: NOT COMPLETE WITHOUT CURRENT CHANGE DOCUMENTS FROM DATABASE

	NAME	DATE	COMPANY
DRAWN	C CHAVEZ	11/1/88	KBRS
DESIGN ENGR	W T ARNDT	11/1/88	KBRS
ENGINEERING PEER REVIEWER	C C JOSLYN	11/1/88	KBRS
TECHNICAL CHECKER	P M DORSH	11/1/88	KBRS
DESIGN AUTHORITY	N W WILSON	11/1/88	KBRS

U.S. DEPARTMENT OF ENERGY
Office of River Protection

LERF BASIN 41
BASIN PUMP
SECTIONS AND DETAILS

SIZE F | DRAWING NUMBER H-2-838768 | SHEET 7 | REV 00
SCALE SHOWN

28532 DOE_TILE.DWG (SEPTEMBER 2016)

NOTES:
FOR GENERAL NOTES AND PARTS/MATERIAL SEE SHEET 1.

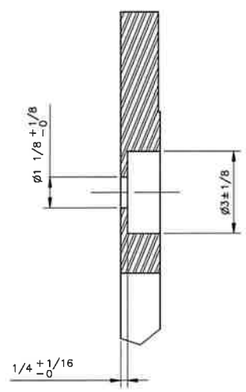

SECTION J–J
SCALE: 1/2

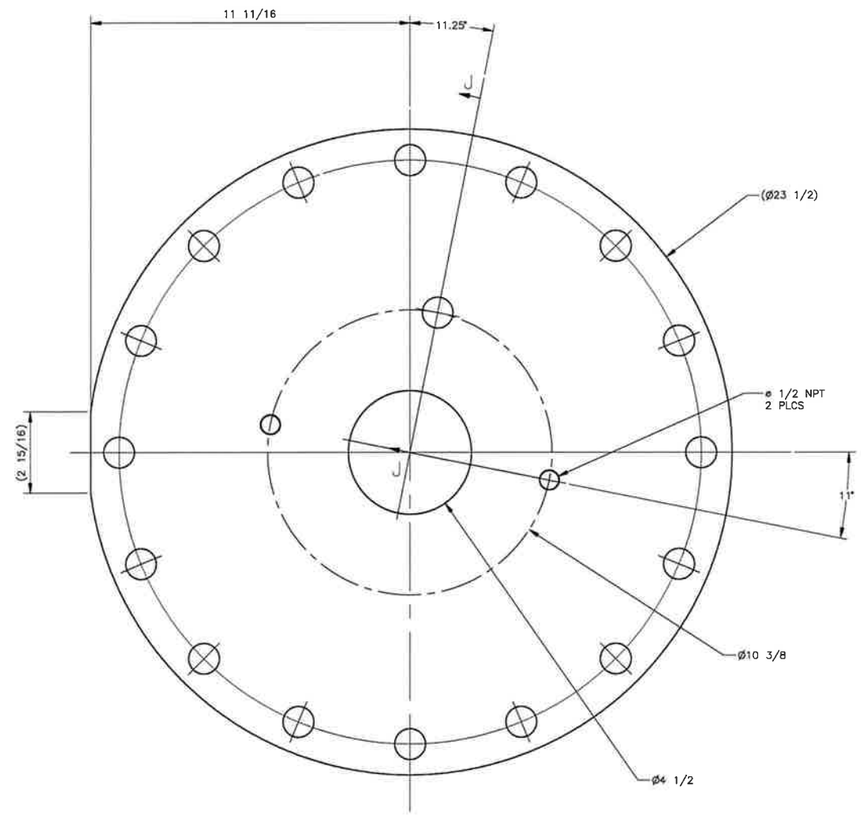

17 FLANGE
SCALE: 1/2

PAUL M. DORSH
STATE OF WASHINGTON
41918
REGISTERED
PROFESSIONAL ENGINEER
5/26/2020

DATE:
May 26, 2020
HANFORD RELEASE

DWG NUMBER	TITLE
DRAWING TRACEABILITY LIST	

REF NUMBER	TITLE
REFERENCES	
NEXT USED ON SHEET 1	

REV NO	DESCRIPTION
0	RELEASED PER EDT-882463
REVISIONS	

BLDG NO 242-AL 242AL-41
MODS NO 2800

CAUTION: NOT COMPLETE WITHOUT CURRENT CHANGE DOCUMENTS FROM DATABASE

	NAME	DATE	COMPANY
DRAWN	F CHAVEZ	5/5/20	SMPS
DWG CHK BY ENGR	W T ARNDT	5/5/20	SMPS
CHALLENGE TEAM REVIEWER	C C JOSLYN	5/5/20	SMPS
DESIGN OWNER	P M DORSH	5/5/20	SMPS
DESIGN AUTHORITY	N W WILSON	5/5/20	SMPS

U.S. DEPARTMENT OF ENERGY
Office of River Protection

LERF BASIN 41
BASIN PUMP
DETAILS AND SECTIONS

SIZE F | DRAWING NUMBER H-2-838768 | SHEET 8 | REV 00
SCALE SHOWN
28527
DOE_YB_F.DWG (SEPTEMBER 2016)

GENERAL NOTES: (UNLESS OTHERWISE SPECIFIED)

1. DIMENSIONS ARE IN INCHES, TOLERANCES SHALL BE AS FOLLOWS:
   FRACTIONS = ±1/8" ANGLES = ±0.5° DECIMAL = .XX ±0.03 .XXX ±.010
2. REMOVE ALL BURRS AND BREAK SHARP EDGES.
3. FABRICATE, WELD, INSPECT, AND TEST PIPING IN ACCORDANCE WITH ASME B31.3, 2016 FOR CATEGORY NORMAL FLUID SERVICE. DESIGN PRESSURE IS 100 PSIG, AND DESIGN TEMPERATURE IS 150°F. HYDROSTATIC LEAK PRESSURE TEST TO 150 PSIG (−0/+10 PSIG). FABRICATION TEMPERATURE IS 50°F TO 120°F.
4. ALL MACHINED SURFACES SHALL BE 125 $\sqrt{}$ IN ACCORDANCE WITH ASME B46.1, 2009, UNLESS OTHERWISE SPECIFIED.
5. WELD AND INSPECT STRUCTURAL WELDS IN ACCORDANCE WITH AWS D1.1, 2015 STATICALLY LOADED CRITERIA. ALL WELDS SHALL BE VT ON FINAL PASS UNLESS OTHERWISE SPECIFIED. WELD PROCEDURES AND QUALIFICATIONS PER ASME B&PV CODE SECTION IX, 2017 ARE ACCEPTABLE.
6. FOR B31.3 ANALYSIS SEE RPP-CALC-63779.
7. USE CLASS M-10 PIPING CODE. SEE CONSTRUCTION SPECIFICATION RPP-SPEC-63632 SECTION 40 40 00.
8. DO NOT CABLE TIE WIRE ROPE. CABLE TIES ARE USED FOR POWER CABLE ONLY.

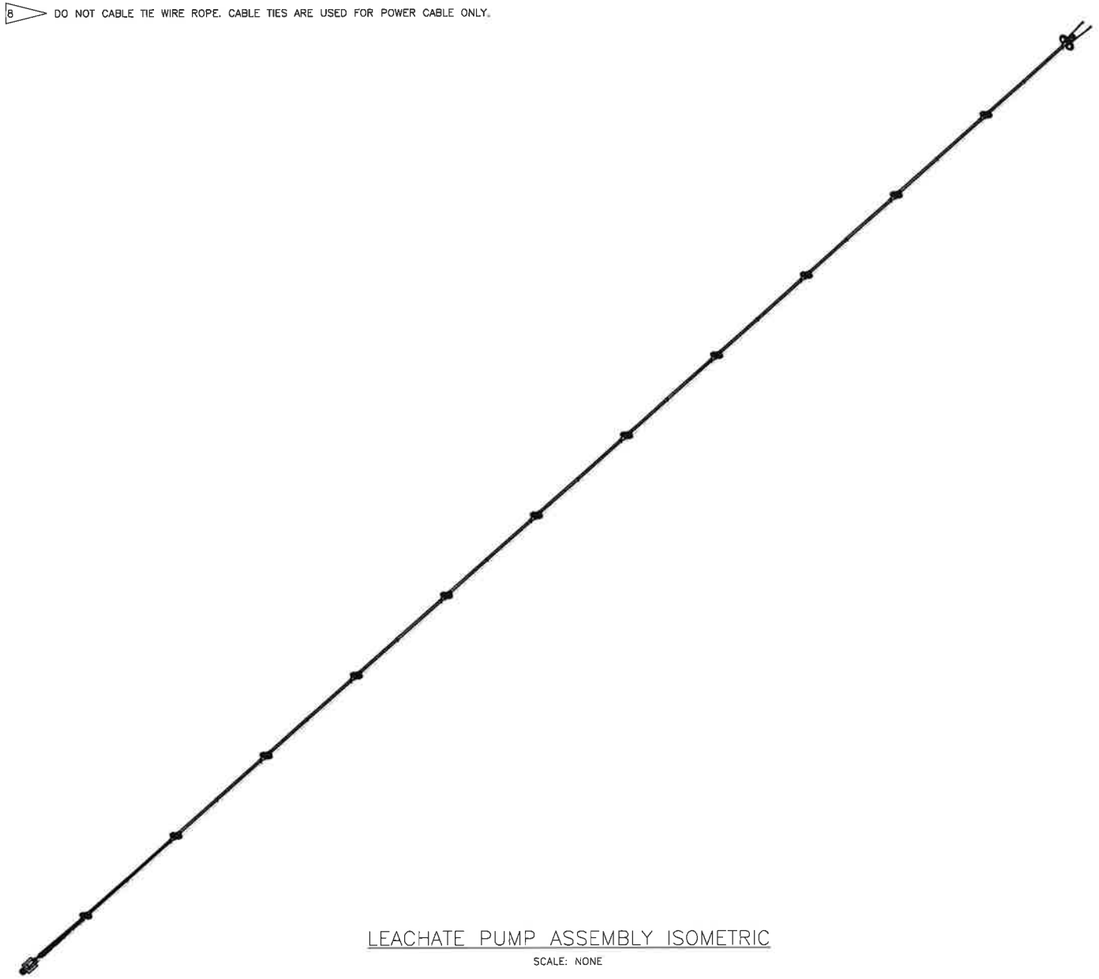

LEACHATE PUMP ASSEMBLY ISOMETRIC

SCALE: NONE

PARTS/MATERIAL LIST

QTY -080	QTY -070	QTY -060	QTY -050	QTY -040	QTY -030	QTY -020	QTY -010	PART/DASH NUMBER	NOMENCLATURE/DESCRIPTION	MATERIAL/REFERENCE	SHT	ITEM NO
								-010	LEACHATE PUMP ASSEMBLY		2	1
							1	-020	PUMP SUPPORT ASSEMBLY		4	2
							22	-030	WHEEL SUPPORT ASSEMBLY		4	3
						2		-040	PUMP SUPPORT WELDMENT		5	4
					1			-050	WHEEL SUPPORT WELDMENT		5	5
							1	-060	PIPE SPOOL 1		6	6
							10	-070	PIPE SPOOL 2		6	7
							1	-080	PIPE SPOOL 3		7	8
		1						-001	MODIFIED BLIND FLANGE, 10, RF CL150	ASTM A182 GR F304L	8	9
			1					-002	WHEEL SUPPORT 1, PLATE, 1/4 THK	ASTM A240 304L	8	10
			4					-003	WHEEL SUPPORT BRACKET, PLATE, 1/4 THK	ASTM A240 304L	8	11
				2				-004	PUMP SUPPORT, PLATE, 1/4 THK	ASTM A240 304L	8	12
				1				-005	PUMP SUPPORT, PIPE, 4 SCH 10S	ASTM A312 TP 304L	9	13
						2		-006	FLAT BAR, 3/8 X 3/4 X LAR	ASTM A276 304L	9	14
	AR	AR							PIPE, 1 1/2 SCH 10S	ASTM A312 TP 304L		15
AR									PIPE, 1 1/2 SCH 40S	ASTM A312 TP 304L		16
						AR			PIPE, 1 1/4 SCHED 40S	ASTM A312 TP 304L		17
		1							PIPE, 1/2 X 6 LG, SCHED 40	ASTM A312 TP 304L		18
1	2	2							FLANGE, 1 1/2 WN RF, CL150	ASTM A182 GR F304L		19
1									PIPE COUPLING, 1 1/2 SW X 1 1/4 FNPT, CL3000	PENN MACHINE		20
						1		1SC3/05/6 C L40	CLOSE-COUPLED SUBMERSIBLE ELECTRIC PUMP	LOWARA		21
							1	CGB396	CORD GRIP, 1 NPT	EATON		22
							2	CGB116	CORD GRIP, 1/2 NPT	EATON		23
					2				WHEEL, 3 DIA	NYLON		24
							11	BLUEGARD STYLE 3700	GASKET, 1 1/2 CL150, 1/8 THK	GARLOCK		25
							4	G411	THIMBLE	CROSBY		26
						AR			BANDING, 3/4 X .033 THK W/ CLAMP			27
							AR		CABLE TIE			28
								S0116-SA10	SHACKLE, 3/8	SUNCOR STAINLESS		29
					2			(90298A63)	HEX SOCKET SHOULDER SCREW, 5/16-18 UNC-2A X 1 3/4 LG	(MCMASTER-CARR)		30
							44		STUD, 1/2-13 UNC-2A X 3 1/4 LG	ASTM A193 GR B8 CL2		31
					2				LOCKNUT, HEX 5/16-18 UNC 2-B	ASTM A194 GR 8		32
							128		NUT, HEAVY HEX 1/2-13 UNC-2B	ASTM A194 GR 8		33
							66		WASHER, FLAT 1/2	SS 304		34
					2				WASHER, FLAT 5/16	SS 304		35
							4	5128245	DUPLEX SLEEVE, 1/4	ESCO		36
							AR	(3461T34)	WIRE ROPE, 1/4 DIA	(MCMASTER-CARR)		37
						2			ELBOW, 1 1/4, 90 DEG SR (MODIFIED) SCHED 40 BW	ASTM A403 WPS 304L		38

PAUL M. DORSH — STATE OF WASHINGTON — 41918 — REGISTERED PROFESSIONAL ENGINEER

5/26/2020

DATE: May 26, 2020 — HANFORD RELEASE

DWG NUMBER	TITLE
H-15-38	LERF BASIN 41
H-2-838745	DRAWING LIST/TITLE SHEET

DRAWING TRACEABILITY LIST

REF NUMBER	TITLE
NEXT USED ON H-2-838767	

REFERENCES

REV	DESCRIPTION
0	RELEASED PER EDT-882463

REVISIONS

BLDG NO: 242-AL, 242AL-41

INDEX NO: 2600

CAUTION: NOT COMPLETE WITHOUT CURRENT CHANGE DOCUMENTS FROM DATABASE

	NAME	DATE	COMPANY
DRAFTER	H A MENDEZ	10/9/2020	WRPS
CHK'D DRAFTER	W T ARNDT	10/9/2020	WRPS
ENGINEERING PEER REVIEWER	C C JOSLYN	10/9/2020	WRPS
SENIOR ENGINEER	P M DORSH	10/9/2020	WRPS
DESIGN AUTHORITY	N W WILSON	10/9/2020	WRPS

U.S. DEPARTMENT OF ENERGY
Office of River Protection

LERF BASIN 41
LEACHATE PUMP
NOTES AND PARTS LIST

SIZE F — DRAWING NUMBER H-2-838769 — SHEET 1 — REV 00

SCALE SHOWN

28545 — DOC_TEL_F.DWG (SEPTEMBER 2014)

NOTES:
FOR GENERAL NOTES AND PARTS/MATERIAL LIST SEE SHEET 1.

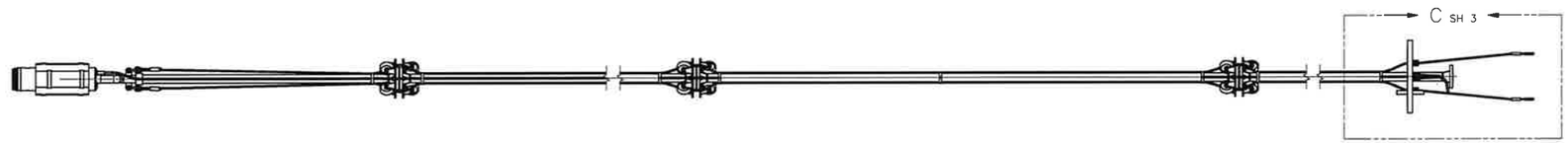

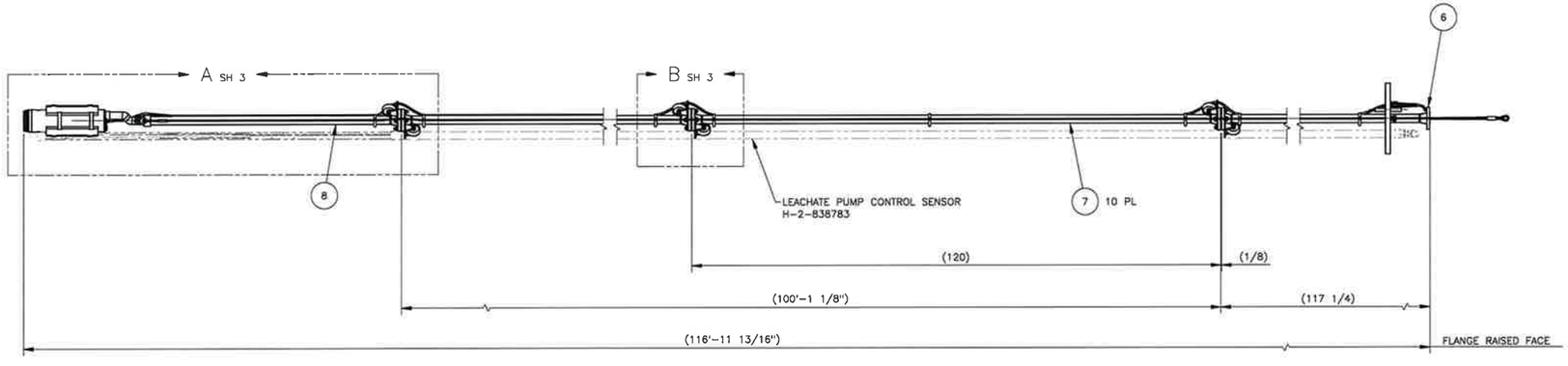

1 LEACHATE PUMP ASSEMBLY
SCALE: 1/12
(ROTATED 15° FOR CLARITY)

PAUL M. DORSH
STATE OF WASHINGTON
41918
REGISTERED
PROFESSIONAL ENGINEER
5/26/2020

DATE:
May 26, 2020
HANFORD RELEASE

DWG NUMBER	TITLE
DRAWING TRACEABILITY LIST	

REF NUMBER	TITLE
REFERENCES	
NEXT USED ON SEE SHEET 1	

REV NO	DESCRIPTION
0	RELEASED PER EDT-882463
REVISIONS	

BLDG NO 242-AL 242AL-41
INDEX NO 2600

CAUTION: NOT COMPLETE WITHOUT CURRENT CHANGE DOCUMENTS FROM DATABASE

	NAME	DATE	COMPANY
DRAFTER	H A MENDEZ	05/26/2020	WRPS
DRAFTING SUPERVISOR	W T ARNDT	05/26/2020	WRPS
ENGINEERING PEER REVIEWER	C C JOSLYN	05/26/2020	WRPS
DESIGN ENGINEER	P M DORSH	05/26/2020	WRPS
DESIGN AUTHORITY	N W WILSON	05/26/2020	WRPS

U.S. DEPARTMENT OF ENERGY
Office of River Protection

LERF BASIN 41
LEACHATE PUMP
ASSEMBLY

SIZE F | DRAWING NUMBER H-2-838769 | SHEET 2 | REV 00
SCALE SHOWN

29786

NOTES:
FOR GENERAL NOTES AND PARTS/MATERIAL LIST SEE SHEET 1.

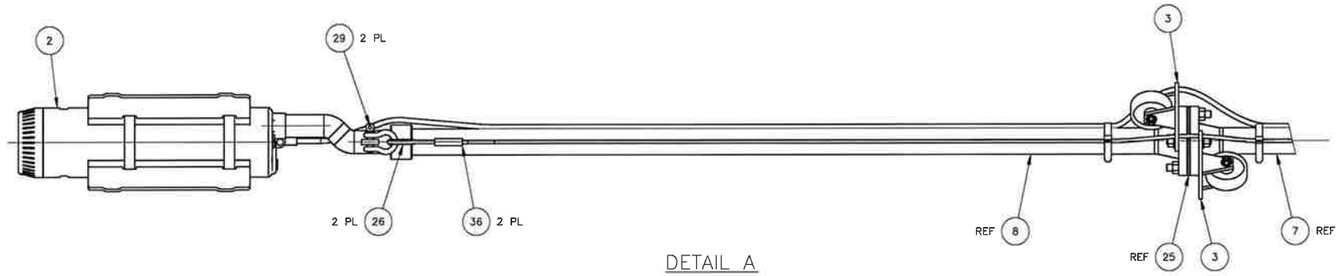

DETAIL A
SCALE: 1/4
SHEET 2

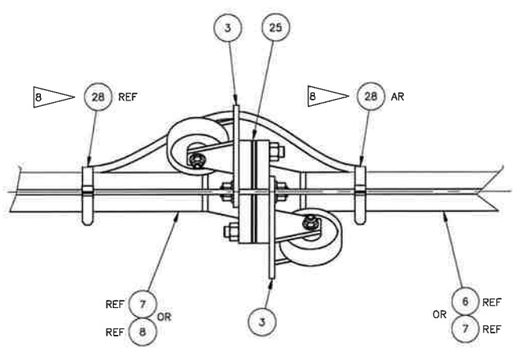

DETAIL B
SCALE: 3/8
SHEET 2
(TYPICAL 11 PL)

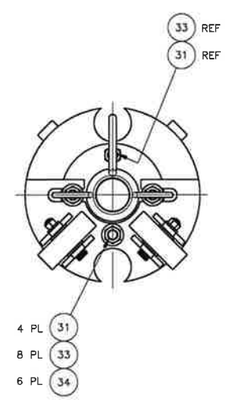

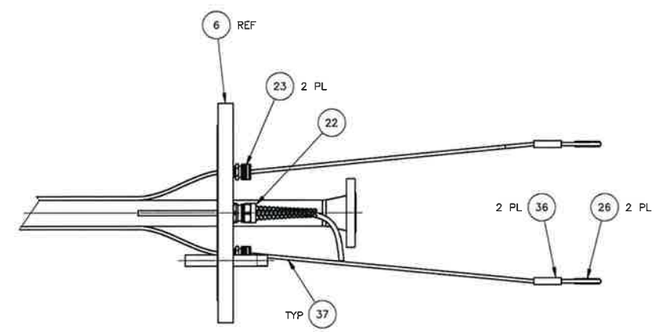

DETAIL C
SCALE: 1/4
SHEET 2

PAUL M. DORSH
STATE OF WASHINGTON
41918
REGISTERED
PROFESSIONAL ENGINEER
5/26/2020

DATE:
May 26, 2020
HANFORD RELEASE

DWG NUMBER	TITLE
DRAWING TRACEABILITY LIST	

REF NUMBER	TITLE
REFERENCES	
NEXT USED ON SEE SHEET 1	

REV NO	DESCRIPTION
0	RELEASED PER EDT-882463
REVISIONS	

CAUTION: NOT COMPLETE WITHOUT CURRENT CHANGE DOCUMENTS FROM DATABASE

BLDG NO 242-AL 242AL-41

INDEX NO 2600

	NAME	DATE	COMPANY
DRAFTER	H A MENDEZ	05/26/2020	MSPS
SNIOR DRAFTER	W T ARNDT	05/26/2020	MSPS
CONTRACTING PARTS REVIEWER	C C JOSLYN	05/26/2020	MSPS
DESIGN ENGINEER	P M DORSH	05/26/2020	MSPS
DESIGN AUTHORITY	N W WILSON	05/26/2020	MSPS

U.S. DEPARTMENT OF ENERGY
Office of River Protection

LERF BASIN 41
LEACHATE PUMP
DETAILS

SIZE F | DRAWING NUMBER H-2-838769 | SHEET 3 | REV 00

SCALE SHOWN

28533

DOE_TB_F.DWG (SEPTEMBER 2016)

NOTES:
FOR GENERAL NOTES AND PARTS/MATERIAL LIST SEE SHEET 1.

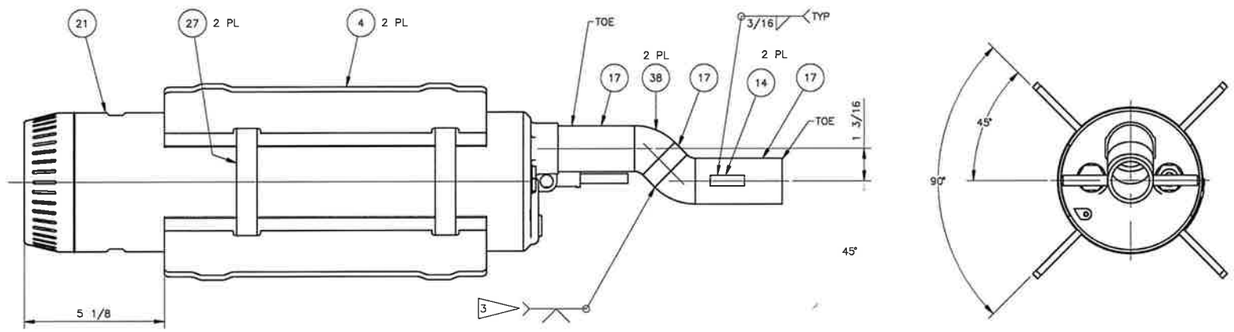

2 PUMP SUPPORT ASSEMBLY
SCALE: 1/2

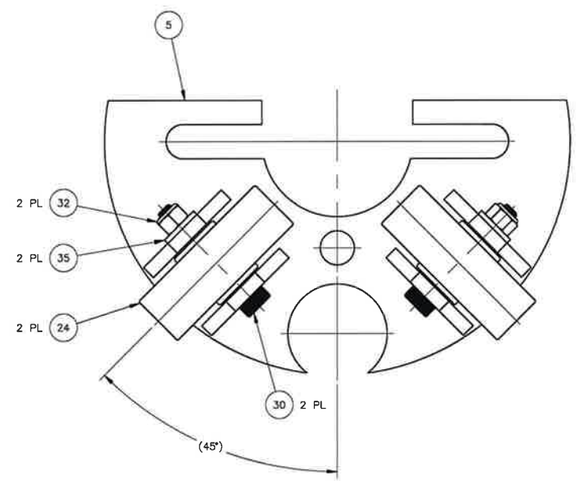

3 WHEEL SUPPORT ASSEMBLY
SCALE: 1/1

PAUL M. DORSH
STATE OF WASHINGTON
41918
REGISTERED
PROFESSIONAL ENGINEER
5/26/2020

DATE:
May 26, 2020
HANFORD RELEASE

DWG NUMBER	TITLE
DRAWING TRACEABILITY LIST	

REF NUMBER	TITLE
REFERENCES	
NEXT USED ON SEE SHEET 1	

REV	DESCRIPTION
0	RELEASED PER EDT-882463
REVISIONS	

BLDG NO 242-AL 242AL-41
WORK NO 2600

CAUTION: NOT COMPLETE WITHOUT CURRENT CHANGE DOCUMENTS FROM DATABASE

	NAME	DATE	COMPANY
DRAFTER	H. A. MENDEZ	05/26/2020	WRPS
CHIEF DRAFTER	W. T. ARNDT	05/26/2020	WRPS
ENGINEERING TECH. REVIEWER	C. C. JOSLYN	05/26/2020	WRPS
DESIGN ENGINEER	P. M. DORSH	05/26/2020	WRPS
DESIGN AUTHORITY	N. W. WILSON	05/26/2020	WRPS

U.S. DEPARTMENT OF ENERGY
Office of River Protection

LERF BASIN 41
LEACHATE PUMP
DETAILS

SIZE F | DRAWING NUMBER H-2-838769 | SHEET 4 | REV 00
SCALE SHOWN
28554
DOE_TBL_F.DWG (SEPTEMBER 2011)

NOTES:
FOR GENERAL NOTES AND PARTS/MATERIAL LIST SEE SHEET 1.

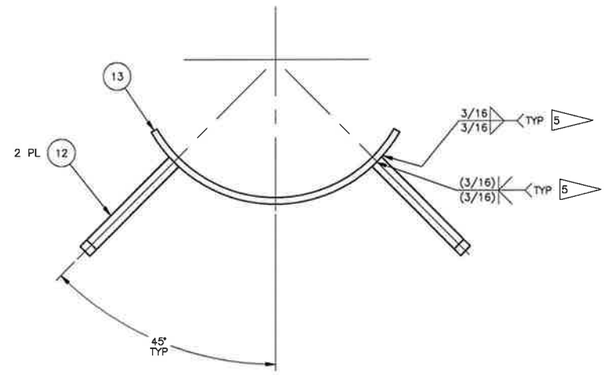

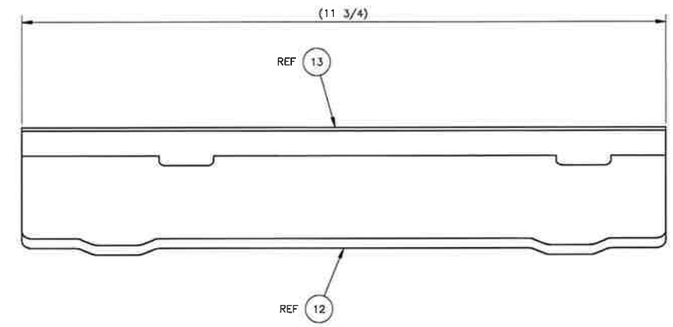

4 PUMP SUPPORT WELDMENT
SCALE: 1/1

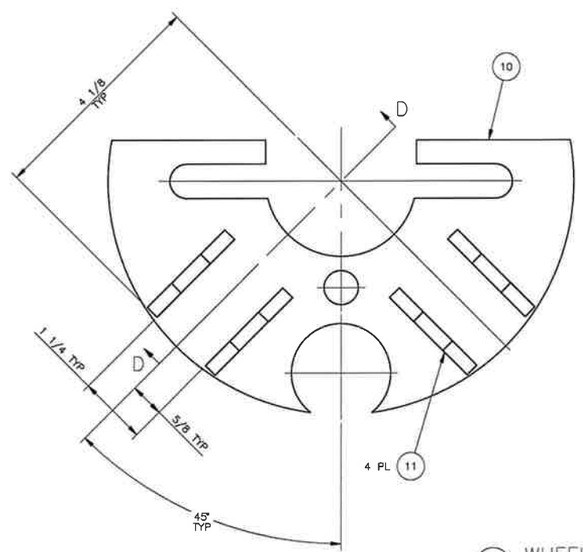

5 WHEEL SUPPORT WELDMENT
SCALE: 1/1

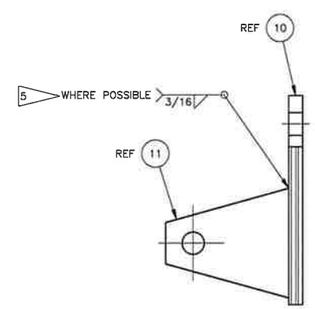

SECTION D–D
SCALE: 1/1

DATE:
May 26, 2020
HANFORD RELEASE

DWG NUMBER	TITLE
DRAWING TRACEABILITY LIST	

REF NUMBER	TITLE
REFERENCES	
NEXT USED ON SEE SHEET 1	

REV NO	DESCRIPTION
0	RELEASED PER EDT-882463
REVISIONS	

BLDG NO 242-AL 242AL-41
INDEX NO 2600

CAUTION: NOT COMPLETE WITHOUT CURRENT CHANGE DOCUMENTS FROM DATABASE

	NAME	DATE	COMPANY
DRAWN BY	H A MENDEZ	5/26/2020	WRPS
DRAFTING CHECK	W T ARNDT	5/26/2020	WRPS
ENGINEERING PEER REVIEWER	C C JOSLYN	5/26/2020	WRPS
DESIGN ENGINEER	P M DORSH	5/26/2020	WRPS
DESIGN AUTHORITY	N W WILSON	5/26/2020	WRPS

U.S. DEPARTMENT OF ENERGY
Office of River Protection

LERF BASIN 41
LEACHATE PUMP
WELDMENTS

SIZE F | DRAWING NUMBER H-2-838769 | SHEET 5 | REV 00
SCALE SHOWN

28537 DOE_TEL_F.DWG (SEPTEMBER 2016)

NOTES:
FOR GENERAL NOTES AND PARTS/MATERIAL LIST SEE SHEET 1.

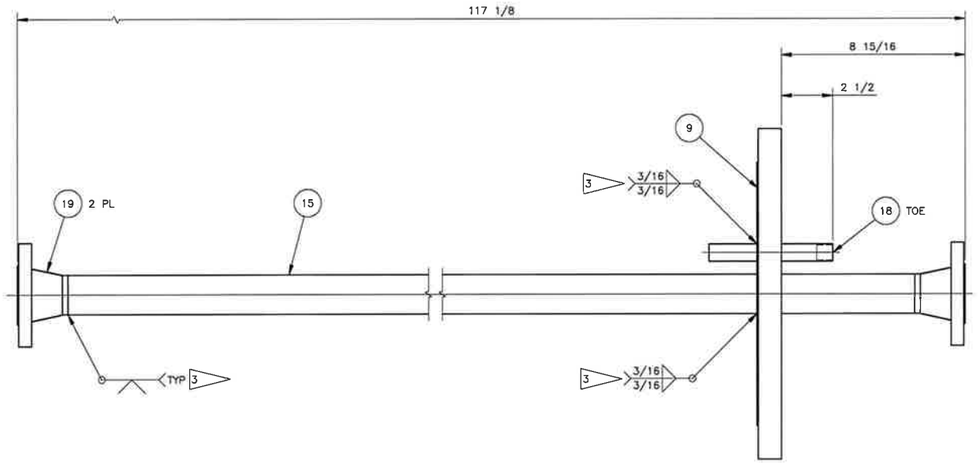

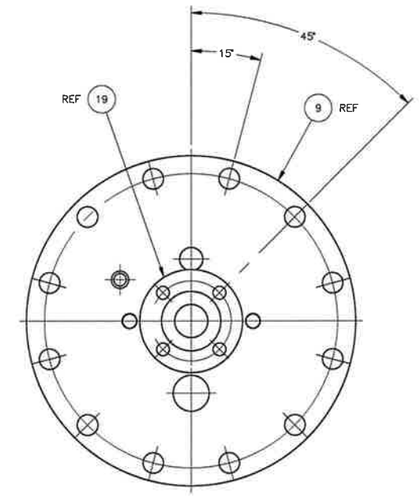

6 PIPE SPOOL 1
SCALE: 3/8

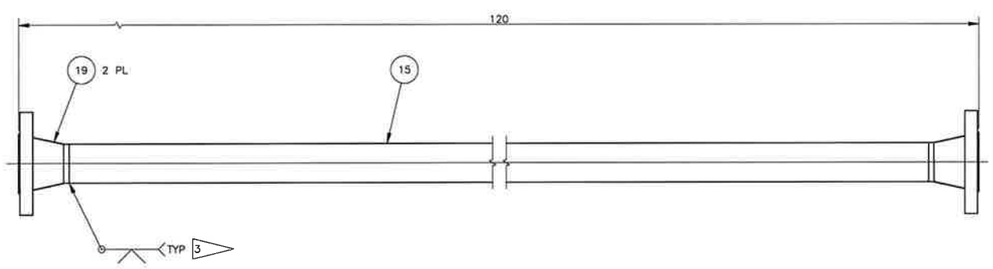

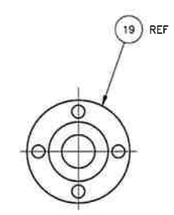

7 PIPE SPOOL 2
SCALE: 3/8

DATE:
May 26, 2020
HANFORD RELEASE

DWG NUMBER	TITLE
DRAWING TRACEABILITY LIST	

REF NUMBER	TITLE
REFERENCES	
NEXT USED ON SEE SHEET 1	

REV NO	DESCRIPTION
0	RELEASED PER EDT-882463
REVISIONS	

BLDG NO 242-AL 242AL-41
INDEX NO 2600

CAUTION: NOT COMPLETE WITHOUT CURRENT CHANGE DOCUMENTS FROM DATABASE

	NAME	DATE	CONTRACT
DRAFTER	H A MENDEZ	05/26/2020	83879
DRAFTER SUPERV	W T ARNDT	05/26/2020	83879
ENGINEERING REVIEW	C C JOSLYN	05/26/2020	83879
DESIGN ENGINEER	P M DORSH	05/26/2020	83879
DESIGN AUTHORITY	N W WILSON	05/26/2020	83879

U.S. DEPARTMENT OF ENERGY
Office of River Protection

LERF BASIN 41
LEACHATE PUMP
PIPE SPOOLS

SIZE	DRAWING NUMBER	SHEET	REV
F	H-2-838769	6	00

SCALE: SHOWN

28550 DOC_TEL_F.DWG (SEPTEMBER 2019)

NOTES:
FOR GENERAL NOTES AND PARTS/MATERIAL LIST SEE SHEET 1.

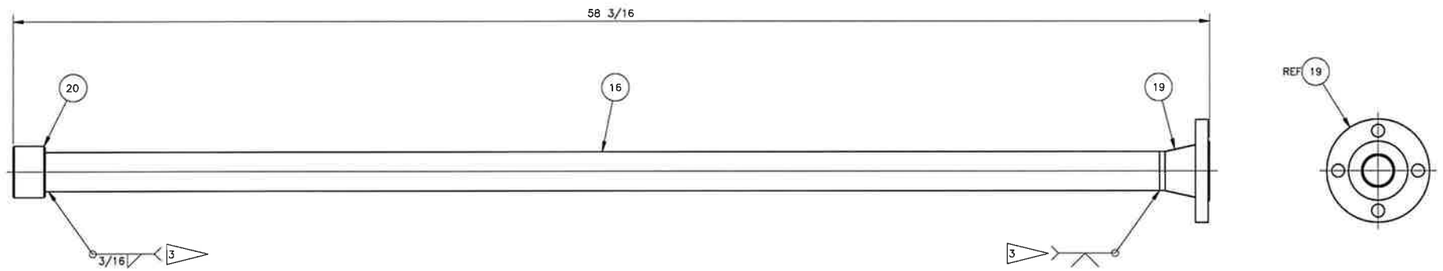

8 PIPE SPOOL 3
SCALE: 3/8

DATE:
May 26, 2020
HANFORD RELEASE

DWG NUMBER	TITLE
DRAWING TRACEABILITY LIST	

REF NUMBER	TITLE
REFERENCES	
NEXT USED ON SEE SHEET 1	

REV NO	DESCRIPTION
0	RELEASED PER EDT-882463
REVISIONS	

BLDG NO 242-AL 242AL-41
INDEX NO 2600

CAUTION: NOT COMPLETE WITHOUT CURRENT CHANGE DOCUMENTS FROM DATABASE

	NAME	DATE	COMPANY
DRAFTER	H A MENDEZ	10/9/2020	MRPS
CHIEF DESIGNER	W T ARNDT	10/9/2020	MRPS
ENGINEERING CHIEF REVIEWER	R C JOSLIN	10/9/2020	MRPS
DESIGN ENGINEER	P M DORSH	10/9/2020	MRPS
DESIGN AUTHORITY	N W WILSON	10/9/2020	MRPS

U.S. DEPARTMENT OF ENERGY
Office of River Protection

LERF BASIN 41
LEACHATE PUMP
PIPE SPOOLS

SIZE	DRAWING NUMBER	SHEET	REV
F	H-2-838769	7	00

SCALE SHOWN

28543 SOC_TB_F.DWG (SEPTEMBER 2016)

NOTES:
FOR GENERAL NOTES AND PARTS/MATERIAL LIST SEE SHEET 1.

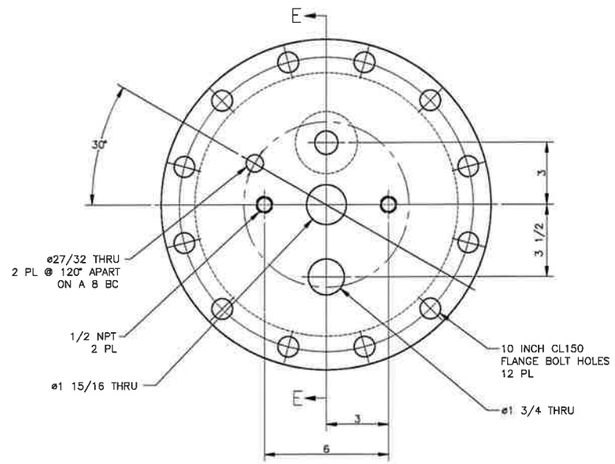

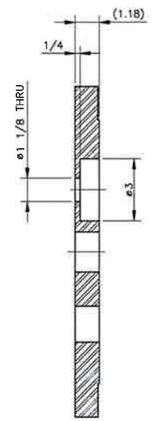

SECTION E–E
SCALE: 3/8

9 MODIFIED BLIND FLANGE
SCALE: 3/8

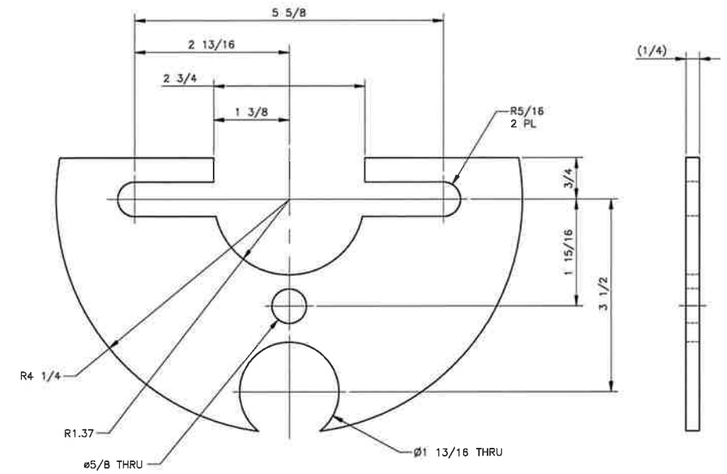

10 WHEEL SUPPORT 1
SCALE: 1/1

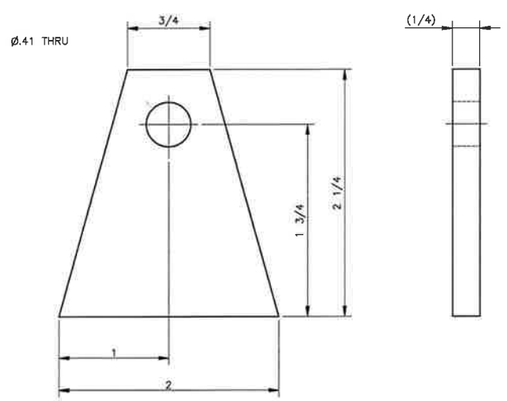

11 WHEEL SUPPORT BRACKET
SCALE: 2/1

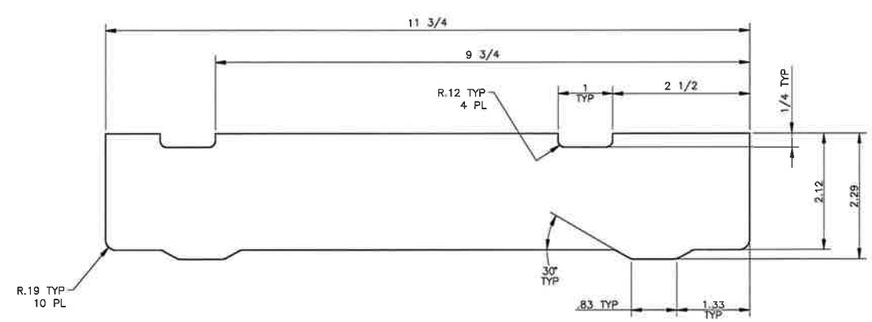

12 PUMP SUPPORT PLATE
SCALE: 1/1

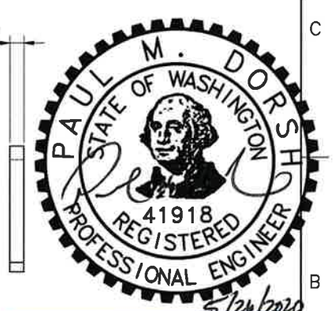

DATE:
May 26, 2020
HANFORD RELEASE

DWG NUMBER	TITLE
DRAWING TRACEABILITY LIST	

REF NUMBER	TITLE
REFERENCES	
NEXT USED ON SEE SHEET 1	

REV	DESCRIPTION
0	RELEASED PER EDT-882463
REVISIONS	

BLOCK NO 242-AL 242AL-41
BOOK NO 2600

CAUTION: NOT COMPLETE WITHOUT CURRENT CHANGE DOCUMENTS FROM DATABASE

	NAME	DATE
DRAFTER	H A MENDEZ	11/1/88
DRAFTER SUPVR	W T ARNDT	11/1/88
DESIGN/ENG DATA REVIEWER	C C JOSLYN	11/1/88
DESIGN ENGINEER	P M DORSH	11/1/88
DESIGN AUTHORITY	N W WILSON	11/1/88

U.S. DEPARTMENT OF ENERGY
Office of River Protection

LERF BASIN 41
LEACHATE PUMP
DETAILS

SIZE F | DRAWING NUMBER H-2-838769 | SHEET 8 | REV 00
SCALE SHOWN
28542
DOE_TB_F.DWG (SEPTEMBER 2019)

NOTES:
FOR GENERAL NOTES AND PARTS/MATERIAL LIST SEE SHEET 1.

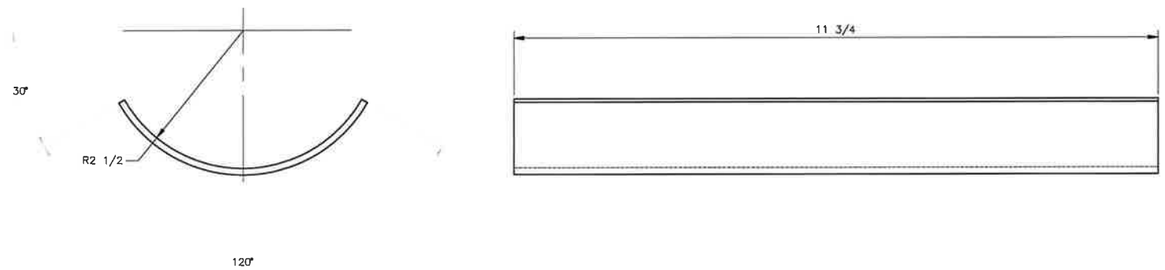

(13) PUMP SUPPORT PIPE
SCALE: 1/1

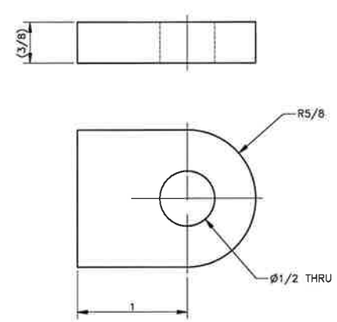

(14) FLAT BAR
SCALE: 2:1

PAUL M. DORSH
STATE OF WASHINGTON
41918
REGISTERED
PROFESSIONAL ENGINEER
5/26/2020

DATE:
May 26, 2020
HANFORD RELEASE

DWG NUMBER	TITLE
DRAWING TRACEABILITY LIST	

REF NUMBER	TITLE
REFERENCES	
NEXT USED ON SEE SHEET 1	

REV	DESCRIPTION
0	RELEASED PER EDT-882463
REVISIONS	

INDX NO 242-AL 242AL-41

INDX NO 2600

CAUTION: NOT COMPLETE WITHOUT CURRENT CHANGE DOCUMENTS FROM DATABASE

	NAME	DATE	COMPANY
DRAFTER	H A MENDEZ	5/26/20	WRPS
DRAFTING SUPERV	W T ARNDT	5/26/20	WRPS
ENGINEERING FIELD REVIEWER	C C JOSLYN	5/26/20	WRPS
DESIGN ENGINEER	P M DORSH	5/26/20	WRPS
DESIGN AUTHORITY	N W WILSON	5/26/20	WRPS

U.S. DEPARTMENT OF ENERGY
Office of River Protection

LERF BASIN 41
LEACHATE PUMP
DETAILS

SIZE F | DRAWING NUMBER H-2-838769 | SHEET 9 | REV 00
SCALE SHOWN

28530

DOE_RL_F.DWG (SEPTEMBER 2016)

GENERAL NOTES: (UNLESS OTHERWISE SPECIFIED)

1. DIMENSIONS ARE IN INCHES, TOLERANCES SHALL BE AS FOLLOWS:
   FRACTIONS = ±1/8" ANGLES = ±0.5° DECIMAL = .XX ±0.03 .XXX ±.010
2. REMOVE ALL BURRS AND BREAK SHARP EDGES.
3. FABRICATE, WELD, INSPECT, AND TEST PIPING IN ACCORDANCE WITH ASME B31.3, 2016 FOR CATEGORY NORMAL FLUID SERVICE, DESIGN PRESSURE IS 100 PSIG, AND DESIGN TEMPERATURE IS 150°F. HYDROSTATIC LEAK PRESSURE TEST TO 150 PSIG (-0/+10 PSIG). FABRICATION TEMPERATURE IS 50°F TO 120°F.
4. FOR B31.3 ANALYSIS SEE RPP-CALC-63779.
5. FOR PIPING USE CLASS M-10 PIPING CODE SEE CONSTRUCTION SPECIFICATION RPP-SPEC-63632 SECTION 40 40 00.
6. FOR TUBING USE CLASS 153T TUBING CODE SPEC HNF-27957.
7. FOR PIPING INSULATION SEE CONSTRUCTION SPECIFICATION RPP-SPEC-63632 SECTION 40 42 13.

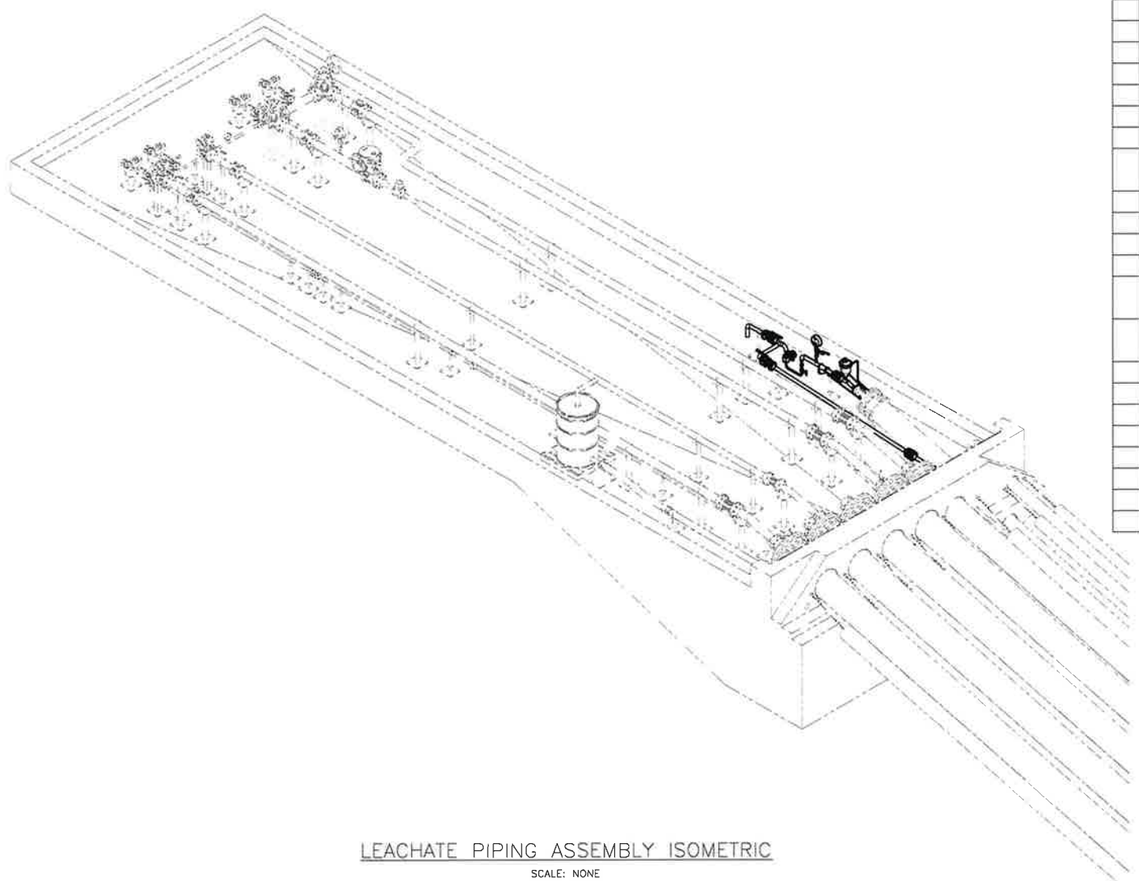

LEACHATE PIPING ASSEMBLY ISOMETRIC

SCALE: NONE

PARTS/MATERIAL LIST

QTY -080	QTY -070	QTY -060	QTY -050	QTY -040	QTY -030	QTY -020	QTY -010	PART/DASH NUMBER	NOMENCLATURE/DESCRIPTION	MATERIAL/REFERENCE	SHT	ITEM NO
							X	-010	LEACHATE PIPING ASSEMBLY		2	1
						X	1	-020	PIPE SPOOL 1		4	2
					X		1	-030	PIPE SPOOL 2		4	3
				X			1	-040	PIPE SPOOL 3		5	4
			X				1	-050	PIPE SPOOL 4		5	5
		X					1	-060	PIPE SPOOL 5		6	6
	X						1	-070	PIPE SPOOL 6		7	7
X							1	-080	PIPE SPOOL 7		7	8
												9
AR	AR	AR	AR		AR	AR			PIPE, 1 1/2 SCH 40S	ASTM A312 TP 304L		10
				AR	AR				PIPE, 1/2 SCH 40S	ASTM A312 TP 304L		11
							AR		TUBE, 1/2 X .065 WALL	ASTM A269 TP 316		12
2	2	2	1		1	2			FLANGE, 1 1/2 WN RF, CL150	ASTM A182 GR F304L		13
		1		1					FLANGE, 1/2 WN RF, CL150	ASTM A182 GR F304L		14
1							1		ELBOW, 1 1/2 45 DEG LR, SCH 40S, BW	ASTM A403 WPS 304L		15
		2	1		1				ELBOW, 1 1/2 90 DEG LR, SCH 40S, BW	ASTM A403 WPS 304L		16
				2					ELBOW, 1/2 90 DEG LR, SCH 40S, BW	ASTM A403 WPS 304L		17
							1		STREET ELBOW, 1/2 NPT	ASTM A351		18
		1			1				REDUCER CONCENTRIC, 1 1/2 X 1/2, SCH 40S, BW	ASTM A312 TP 304L		19
		1							TEE, 1 1/2, SCH 40S, BW	ASTM A403 WPS 304L		20
							1		TEE, 1/2 NPT, CL3000	ASTM A182		21
					1	1		(456T332)	THREDOLET, 1/2 FNPT	(McMASTER CARR)		22
							4		PIPE NIPPLE, SCHED 40S 1/2 NPT X 3 LG	ASTM A312 TP 304L		23
				1					PIPE NIPPLE, SCH 40S 1/2 NPT X 2 LG	ASTM A312 TP 304L		24
				1				3131-3	UNION TAILPIECE, 1/2 FNPT	HART INDUSTRIES		25
					1			3131-3	UNION THREADPIECE, 1/2 FNPT	HART INDUSTRIES		26
							1	141.6	AIRVACUUM VALVE, 1/2 FNPT INLET, 1/2 FNPT DISCHARGE	APCO		27
							2	150150-11000SSTT-NN-00 01	BALL VALVE, 1 1/2 FP	FLOWTEK		28
							2	(46495K210)	BALL VALVE, 1/2	(MCMASTER CARR)		29
				1				SS-18RF8	NEEDLE VALVE, 1/2 FNPT	SWAGELOK		30
							1	8711-TSA-005-R-5-N0-DT	FLOW METER, 1/2 CL 150, 8700 SERIES	ROSEMOUNT		31
					1			MODEL 582-SS	STRAINER, 1 1/2 SW	MUELLER		32
							1	351009 SW L 04 L XLLC4 100#	PRESSURE GAUGE, 1/2 NPT, 3 1/2 FACE, 0 TO 100 PSIG	ASHCROFT		33
							2		DURCOR FLANGED FLEXIJOINT, 1 1/2 INCH, 4 CONVOLUTIONS	ETHYLENE		34
							8		GASKET, 1/8 THK, 1 1/2 INCH RF, CL150	GARLOCK		35
							2		GASKET, 1/8 THK, 1/2 INCH RF, CL150	GARLOCK		36
							1	SS-810-7-8	FEMALE CONNECTOR, 1/2 FNPT	SWAGELOK		37
							1	SS-810-1-8	MALE CONNECTOR, 1/2 NPT	SWAGELOK		38
							16		STUD, 1/2-13 UNC-2A X 2 3/4 LG	ASTM A193 GR B8 CL2		39
							4		STUD, 1/2-13 UNC-2A X 5 LG	ASTM A193 GR B8 CL2		40
							16		HEX BOLT, 1/2-13 UNC-2A X 1 1/2 LG	ASTM A193 GR B8 CL2		41
							40		NUT, HEX 1/2-13 UNC-2B	ASTM A194 GR 8		42

PAUL M. DORSH — STATE OF WASHINGTON — 41918 — REGISTERED PROFESSIONAL ENGINEER

5/26/2020

DATE: May 26, 2020 — HANFORD RELEASE

DWG NUMBER	TITLE
H-15-38	LERF BASIN 41
H-2-838745	DRAWING LIST/TITLE SHEET

DRAWING TRACEABILITY LIST — REF NUMBER / TITLE — REFERENCES — NEXT USED ON H-2-838771

REV NO	DESCRIPTION
0	RELEASED PER EDT-882463

REVISIONS

BLDG NO: 242-AL, 242AL-41

INDEX NO: 8407

CAUTION: NOT COMPLETE WITHOUT CURRENT CHANGE DOCUMENTS FROM DATABASE

	NAME	DATE	COMPANY
DRAFTER	F CHAVEZ	10/9/200	MSPS
DESIGN OWNER	W T ARNDT	10/9/200	MSPS
CONCURRING PER REVIEWER	C C JOSLYN	10/9/200	MSPS
DESIGN ENGINEER	P M DORSH	10/9/200	MSPS
DESIGN AUTHORITY	N W WILSON	10/9/200	MSPS

U.S. DEPARTMENT OF ENERGY
Office of River Protection

LERF BASIN 41
LEACHATE PIPING
NOTES AND PARTS LIST

SIZE F — DRAWING NUMBER H-2-838770 — SHEET 1 — REV 00

SCALE SHOWN

29779

DOE_RL_F.DWG (SEPTEMBER 2019)

NOTES:
FOR GENERAL NOTES AND PARTS/MATERIAL LIST SEE SHEET 1.

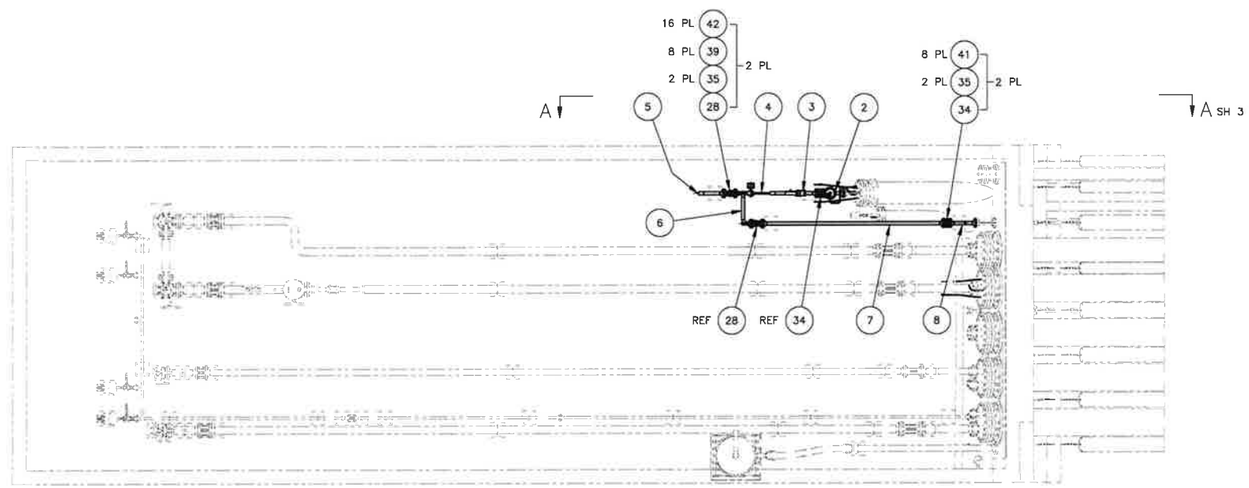

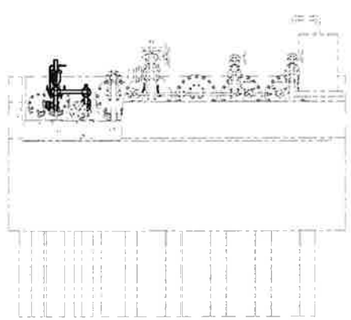

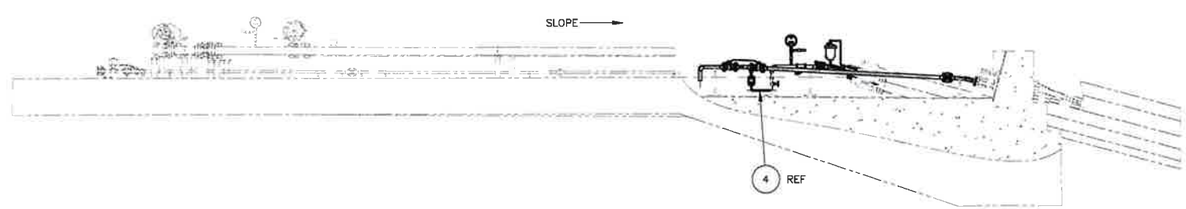

1 LEACHATE PIPING ASSEMBLY
SCALE: 1/32

PAUL M. DORSH
STATE OF WASHINGTON
41918
REGISTERED
PROFESSIONAL ENGINEER
5/26/2020

DATE:
May 26, 2020
HANFORD RELEASE

DWG NUMBER	TITLE
DRAWING TRACEABILITY LIST	

REF NUMBER	TITLE
REFERENCES	
NEXT USED ON SHEET 1	

REV NO	DESCRIPTION
0	RELEASED PER EDT-882463
REVISIONS	

BLDG NO 242-AL 242AL-41
INDEX NO 8407

CAUTION: NOT COMPLETE WITHOUT CURRENT CHANGE DOCUMENTS FROM DATABASE

	NAME	DATE	COMPANY
DRAFTER	J M CHAVEZ	5/26/20	SGPS
DESIGN REVIEWER	W T ARNDT	5/26/20	SGPS
ENGINEERING DATA REVIEWER	C C JOSLYN	5/26/20	SGPS
DESIGN ENGINEER	P M DORSH	5/26/20	SGPS
DESIGN AUTHORITY	N W WILSON	5/26/20	SGPS

U.S. DEPARTMENT OF ENERGY
Office of River Protection

LERF BASIN 41
LEACHATE PIPING
ASSEMBLY

SIZE F | DRAWING NUMBER H-2-838770 | SHEET 2 | REV 00
SCALE SHOWN

29771 DOE_TB_F.DWG (SEPTEMBER 2014)

NOTES:
FOR GENERAL NOTES AND PARTS/MATERIAL LIST SEE SHEET 1.

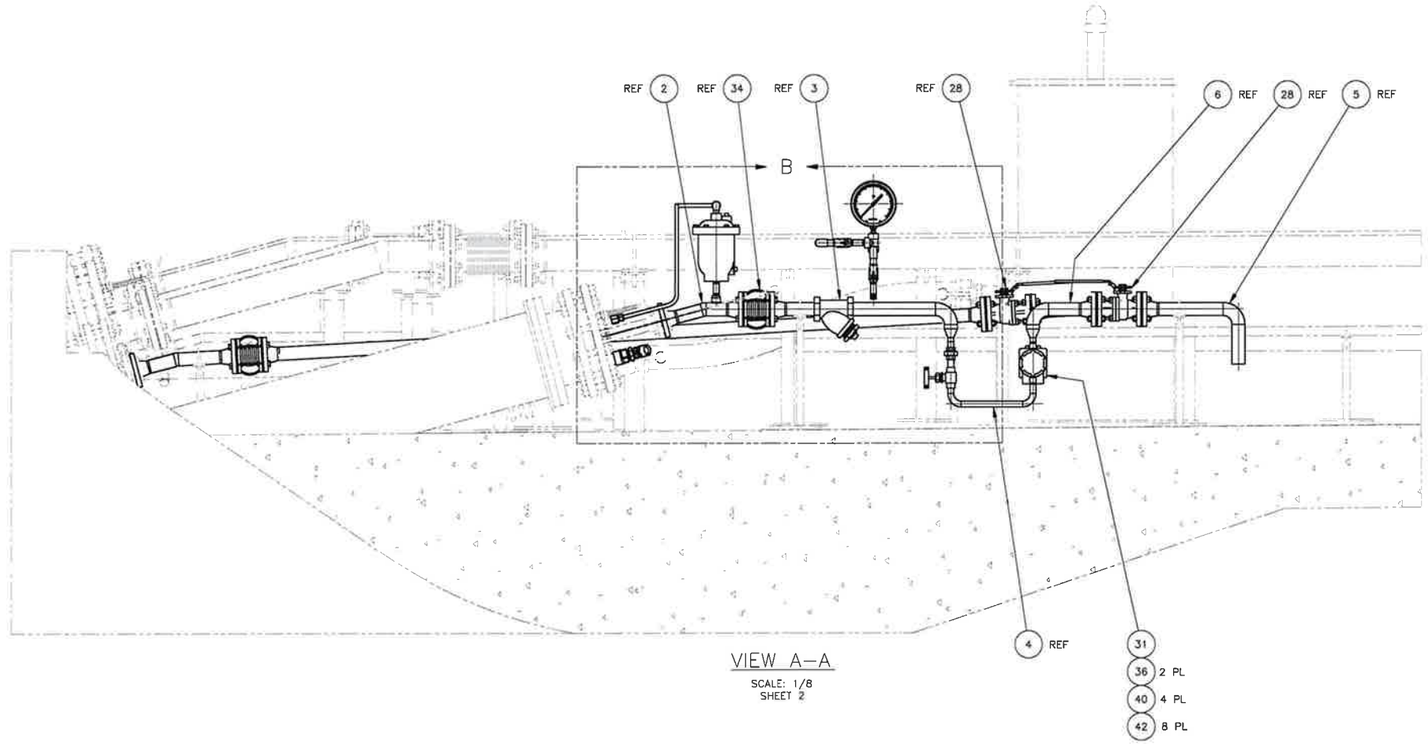

VIEW A–A
SCALE: 1/8
SHEET 2

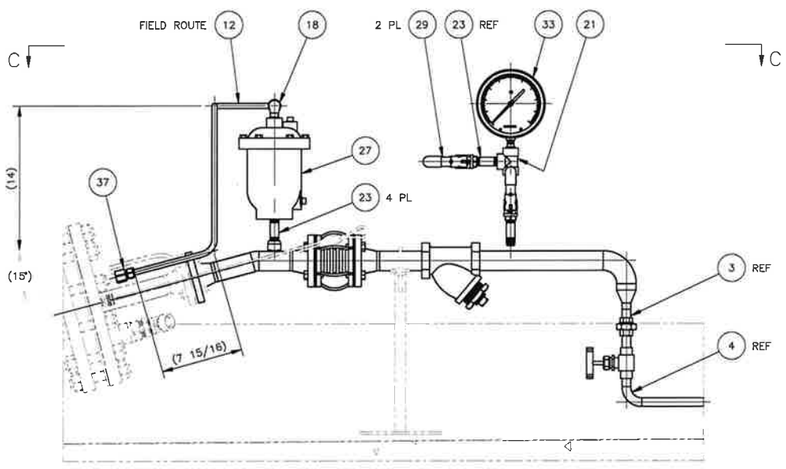

DETAIL B
SCALE: 3/16
(SOME OBJECTS REMOVED FOR CLARITY)

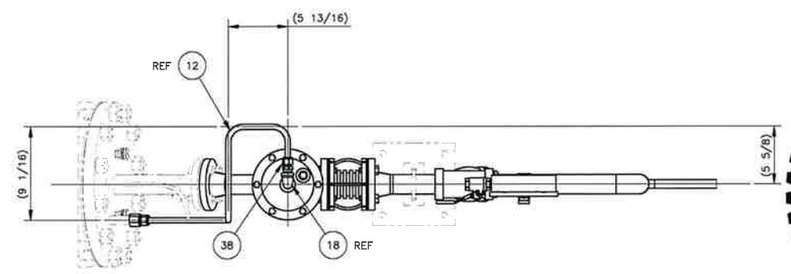

VIEW C–C
SCALE: 3/16
(SOME OBJECTS REMOVED FOR CLARITY)

PAUL M. DORSH
STATE OF WASHINGTON
41918
REGISTERED
PROFESSIONAL ENGINEER
5/26/2020

DATE:
May 26, 2020
HANFORD RELEASE

DWG NUMBER	TITLE
DRAWING TRACEABILITY LIST	

REF NUMBER	TITLE
REFERENCES	
NEXT USED ON SHEET 1	

REV	DESCRIPTION
0	RELEASED PER EDT–882463
REVISIONS	

SLDC NO 242–AL 242AL–41
INDEX NO 8407

CAUTION: NOT COMPLETE WITHOUT CURRENT CHANGE DOCUMENTS FROM DATABASE

	NAME	DATE	COMPANY
DRAFTER	F CHAVEZ	05/26/20	STEDS
DESIGN OWNER	W T ARNDT	05/26/20	STEDS
CONTRACTING FIELD REVIEWER	C C JOSLYN	05/26/20	STEDS
DESIGN ENGINEER	P M DORSH	05/26/20	STEDS
DESIGN AUTHORITY	N W WILSON	05/26/20	STEDS

U.S. DEPARTMENT OF ENERGY
Office of River Protection

LERF BASIN 41
LEACHATE PIPING
VIEW

SIZE	DRAWING NUMBER	SHEET	REV
F	H–2–838770	3	00

SCALE SHOWN

29732 DOE_TBLF.DWG (SEPTEMBER 2019)

NOTES:
FOR GENERAL NOTES AND PARTS/MATERIAL LIST SEE SHEET 1.

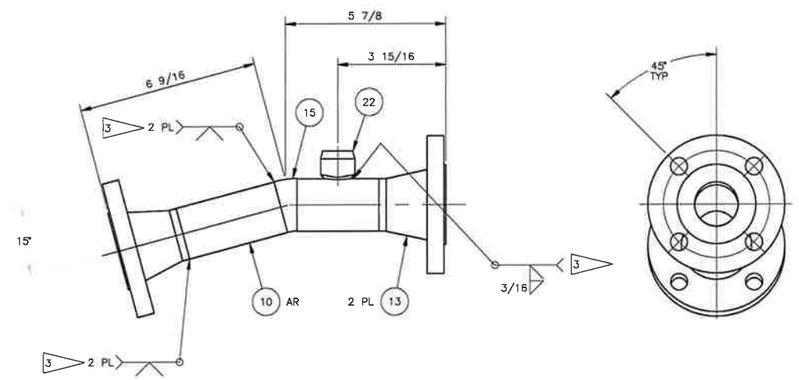

2 PIPE SPOOL 1
SCALE: 1/2

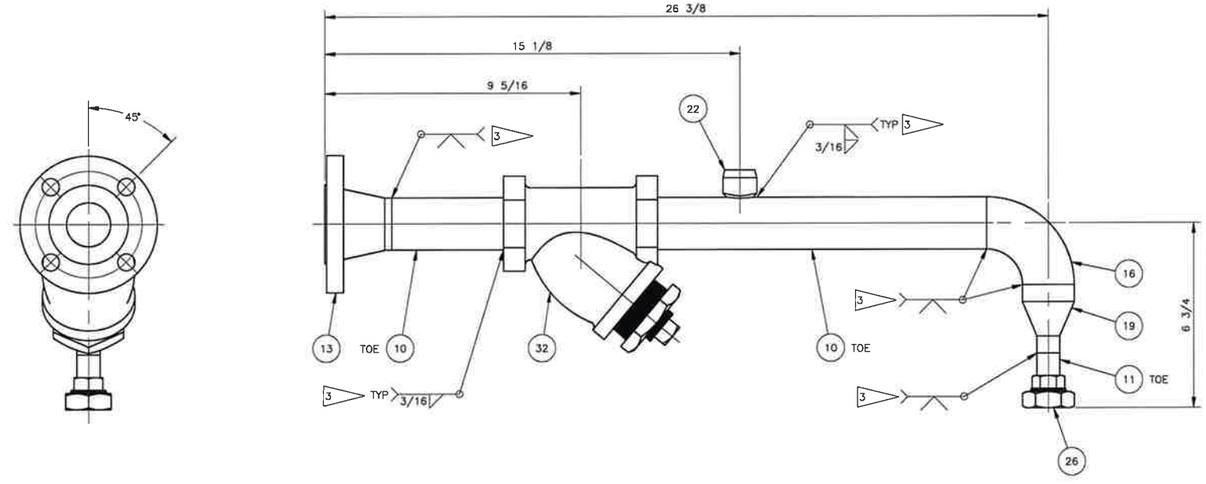

3 PIPE SPOOL 2
SCALE: 1/2

PAUL M. DORSH
STATE OF WASHINGTON
41918
REGISTERED
PROFESSIONAL ENGINEER
5/26/2020

DATE:
May 26, 2020
HANFORD RELEASE

DWG NUMBER	TITLE
DRAWING TRACEABILITY LIST	

REF NUMBER	TITLE
REFERENCES	
NEXT USED ON SHEET 1	

REV NO	DESCRIPTION
0	RELEASED PER EDT-882463
REVISIONS	

BLDG NO 242-AL 242AL-41
INDEX NO 8407

CAUTION: NOT COMPLETE WITHOUT CURRENT CHANGE DOCUMENTS FROM DATABASE

	NAME	DATE	COMPANY
DRAWN BY	R CHAVEZ	05/26/2020	MSPS
ENGINEERING DESIGNER	W T ARNDT	05/26/2020	MSPS
ENGINEERING PEER REVIEWER	C C JOSLYN	05/26/2020	MSPS
SCHED ENGINEER	P M DORSH	05/26/2020	MSPS
DESIGN AUTHORITY	N W WILSON	05/26/2020	MSPS

U.S. DEPARTMENT OF ENERGY
Office of River Protection

LERF BASIN 41
LEACHATE PIPING
DETAILS

SIZE F | DRAWING NUMBER H-2-838770 | SHEET 4 | REV 00
SCALE SHOWN
29782
CDC_TB_F.DWG (SEPTEMBER 2018)

NOTES:
FOR GENERAL NOTES AND PARTS/MATERIAL LIST SEE SHEET 1.

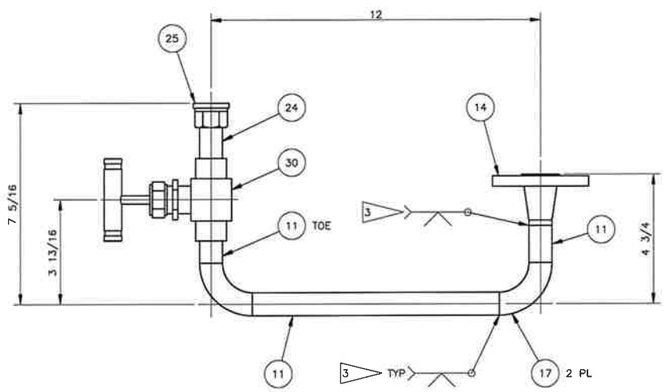

4 PIPE SPOOL 3
SCALE: 1/2

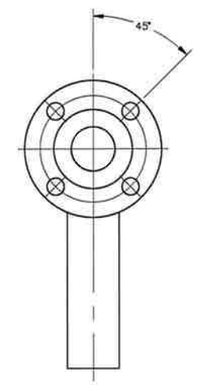

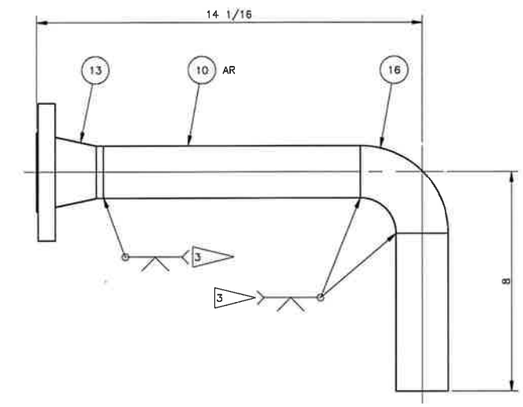

5 PIPE SPOOL 4
SCALE: 1/2

PAUL M. DORSH
STATE OF WASHINGTON
41918
REGISTERED
PROFESSIONAL ENGINEER
5/26/2020

DATE:
May 26, 2020
HANFORD RELEASE

DWG NUMBER	TITLE
DRAWING TRACEABILITY LIST	

REF NUMBER	TITLE
REFERENCES	
NEXT USED ON SHEET 1	

REV NO	DESCRIPTION
0	RELEASED PER EDT-882463
REVISIONS	

BLDG NO 242-AL 242AL-41
INDEX NO 8407

CAUTION: NOT COMPLETE WITHOUT CURRENT CHANGE DOCUMENTS FROM DATABASE

	NAME	DATE	COMPANY
DRAFTER	J. CHAVEZ	05/05/2020	WRPS
DRAFTER SUPERVISOR	W. T. ARNDT	05/05/2020	WRPS
CONCURRING REV. REVIEWER	C. E. JOSLYN	05/14/2020	WRPS
DESIGN ENGINEER	P. M. DORSH	05/26/2020	WRPS
DESIGN AUTHORITY	N. W. WILSON	05/26/2020	WRPS

U.S. DEPARTMENT OF ENERGY
Office of River Protection

LERF BASIN 41
LEACHATE PIPING
DETAILS

SIZE	DRAWING NUMBER	SHEET	REV
F	H-2-838770	5	00

SCALE SHOWN

29775 DOE_TB_F.DWG (SEPTEMBER 2015)

NOTES:
FOR GENERAL NOTES AND PARTS/MATERIAL LIST SEE SHEET 1.

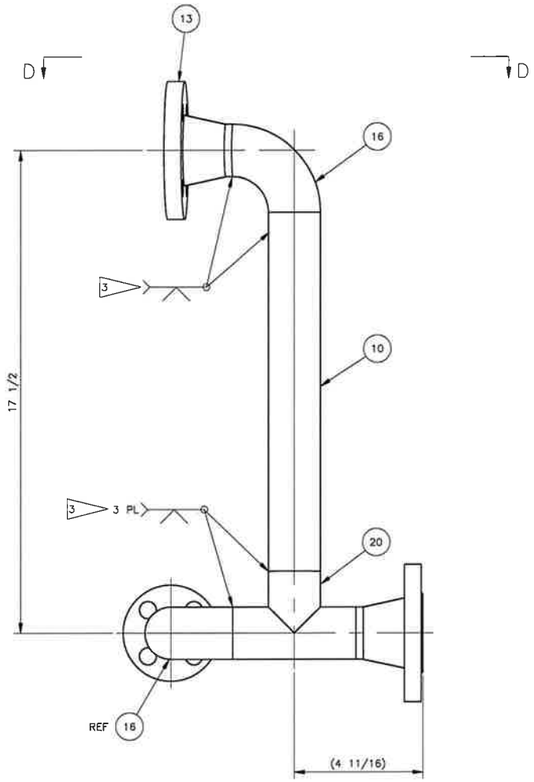

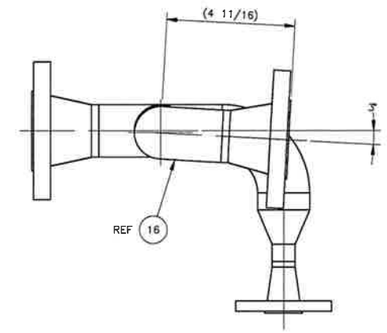

VIEW D–D
SCALE: 1/2

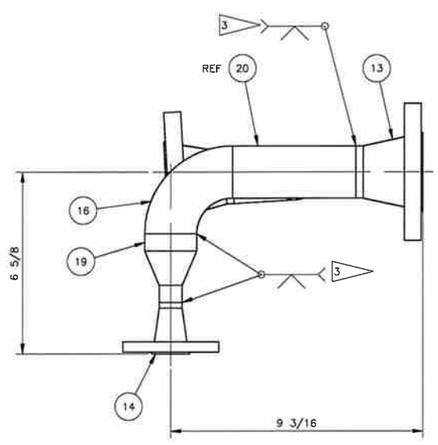

6 PIPE SPOOL 5
SCALE: 1/2

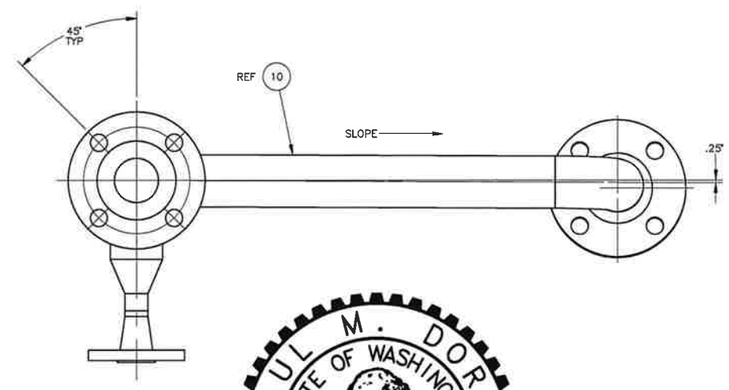

PAUL M. DORSH
STATE OF WASHINGTON
41918
REGISTERED
PROFESSIONAL ENGINEER
5/26/2020

DATE:
May 26, 2020
HANFORD RELEASE

DWG NUMBER	TITLE
DRAWING TRACEABILITY LIST	

REF NUMBER	TITLE
REFERENCES	
NEXT USED ON SHEET 1	

REV NO	DESCRIPTION
0	RELEASED PER EDT–882463
REVISIONS	

DWG NO 242–AL 242AL–41
INDEX NO 8407

CAUTION: NOT COMPLETE WITHOUT CURRENT CHANGE DOCUMENTS FROM DATABASE

	NAME	DATE	COMPANY
DRAFT	F CHAVEZ	05/26/2020	MRPS
DESIGN AGENT	W T ARNDT	05/26/2020	MRPS
INDEPENDENT TECH REVIEWER	K C JOSLYN	05/26/2020	MRPS
DESIGN ENGINEER	P M DORSH	05/26/2020	MRPS
DESIGN AUTHORITY	N W WILSON	05/26/2020	MRPS

U.S. DEPARTMENT OF ENERGY
Office of River Protection

LERF BASIN 41
LEACHATE PIPING
DETAILS

SIZE	DRAWING NUMBER	SHEET	REV
F	H–2–838770	6	00

SCALE SHOWN

29776 DOE_TB_F.DWG (SEPTEMBER 2016)

NOTES:
FOR GENERAL NOTES AND PARTS/MATERIAL LIST SEE SHEET 1.

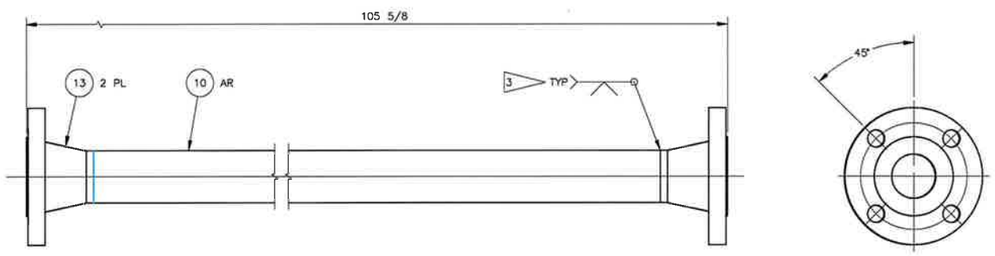

7 PIPE SPOOL 6
SCALE: 1/2

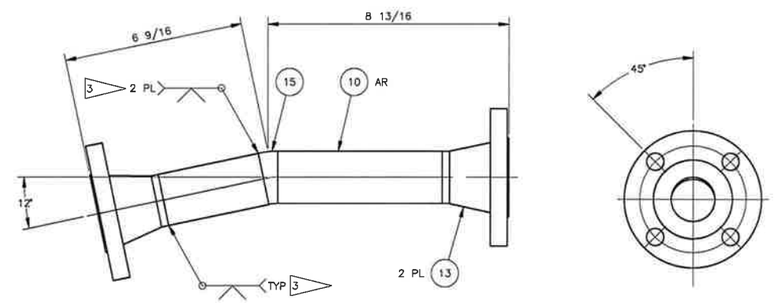

8 PIPE SPOOL 7
SCALE: 1/2

PAUL M. DORSH
STATE OF WASHINGTON
41918
REGISTERED
PROFESSIONAL ENGINEER
5/26/2020

DATE:
May 26, 2020
HANFORD RELEASE

DWG NUMBER	TITLE
DRAWING TRACEABILITY LIST	

REF NUMBER	TITLE
REFERENCES	
NEXT USED ON SHEET 1	

REV	DESCRIPTION
0	RELEASED PER EDT-882463
REVISIONS	

BLDG NO 242-AL 242AL-41
MODE NO 8407

CAUTION: NOT COMPLETE WITHOUT CURRENT CHANGE DOCUMENTS FROM DATABASE

	NAME	DATE	COMPANY
DRAWN	J CHAVEZ	5/26/2020	MSPS
DESIGN ENGR	W T ARNDT	5/26/2020	MSPS
CHANGE/CHK REVIEWER	C C JOSLYN	5/26/2020	MSPS
DESIGN ENGINEER	P M DORSH	5/26/2020	MSPS
DESIGN AUTHORITY	N W WILSON	5/26/2020	MSPS

U.S. DEPARTMENT OF ENERGY
Office of River Protection

LERF BASIN 41
LEACHATE PIPING
DETAILS

SIZE	DRAWING NUMBER	SHEET	REV
F	H-2-838770	7	00

SCALE SHOWN

29785

GENERAL NOTES: (UNLESS OTHERWISE SPECIFIED)

1. DIMENSIONS ARE IN INCHES, TOLERANCES SHALL BE AS FOLLOWS: FRACTIONS = ±1/8" ANGLES = ±0.5° DECIMAL = .XX ±0.03 .XXX ±.010
2. REMOVE ALL BURRS AND BREAK SHARP EDGES.
3. FABRICATE, WELD, INSPECT, AND TEST PIPING IN ACCORDANCE WITH ASME B31.3, 2016 FOR CATEGORY NORMAL FLUID SERVICE. DESIGN PRESSURE IS 150 PSIG, AND DESIGN TEMPERATURE IS 150°F. HYDROSTATIC LEAK PRESSURE TEST TO 225 PSIG (-0/+25 PSIG). FABRICATION TEMPERATURE IS 50°F TO 120°F.
4. ALL MACHINED SURFACES SHALL BE 125 IN ACCORDANCE WITH ASME B46.1, 2009, UNLESS OTHERWISE SPECIFIED.
5. WELD AND INSPECT STRUCTURAL WELDS IN ACCORDANCE WITH AWS D1.1, 2015 STATICALLY LOADED CRITERIA. ALL WELDS SHALL BE VT ON FINAL PASS UNLESS OTHERWISE SPECIFIED. WELD PROCEDURES AND QUALIFICATIONS PER ASME B&PV CODE SECTION IX, 2017 ARE ACCEPTABLE.
6. FOR B31.3 ANALYSIS SEE RPP-CALC-63779.
7. FOR STRUCTURAL ANALYSIS VENT FILTER FRAME SEE RPP-CALC-63787.
8. FOR PIPING HEAT TRACE SEE CONSTRUCTION SPECIFICATION RPP-SPEC-63632 SECTION 40 41 00. FOR HEAT TRACE LOCATION AND ORIENTATION SEE H-2-838780.
9. FOR PIPING INSULATION SEE CONSTRUCTION SPECIFICATION RPP-SPEC-63632 SECTION 40 42 13.
10. USE CLASS M-10 PIPING CODE SEE CONSTRUCTION SPECIFICATION RPP-SPEC-63632 SECTION 40 40 00.
11. GROUT PER CONSTRUCTION SPEC 63632, SECTION 03 30 00, MAX 1" THICK. ANCHOR ROD, 1/2" SST ASTM F593 TP 316, 2 3/4" MIN EMBED, 3 1/2" MAX EMBED. HILTI HIT-HY 200 ADHESIVE ANCHOR SYSTEM.
12. PREPARE AND PAINT ALL EXPOSED CARBON STEEL SURFACES WITH PPG PSX700 OR EQUIVALENT. FINISH COLOR SHALL BE GRAY. APPLY PER MANUFACTURER'S SPECIFICATIONS. POWDER COATING IS AN ACCEPTABLE COATING SYSTEM.

PARTS/MATERIAL LIST

QTY -120	QTY -110	QTY -100	QTY -090	QTY -080	QTY -070	QTY -060	QTY -050	QTY -040	QTY -030	QTY -020	QTY -010	PART/DASH NUMBER	NOMENCLATURE/DESCRIPTION	MATERIAL/REFERENCE	SHT	ITEM NO
												-010	CATCH BASIN PIPING ASSEMBLY		3	1
											1	-020	WTP/EMF EFFLUENT SPOOL		4	2
											1	-030	242A PROCESS CONDENSATE SPOOL		4	3
											1	-040	BASIN PUMP SPOOL		5	4
											1	-050	BASIN PUMP RECIRCULATION/TRANSFER SPOOL		6	5
											1	-060	DRAIN SPOOL		7	6
											4	-070	LEAK DETECTOR SPOOL		8	7
											1	-080	VENT SPOOL		8	8
											1	-090	3 WAY TIE IN SPOOL		8	9
											1	-100	VENT FILTER SUPPORT FRAME		9	10
											1	-110	VENT FILTER ASSEMBLY		10	11
											1	-120	VENT HOSE ASSEMBLY		10	12
																13
											1	H-2-838770	LEACHATE PIPING ASSEMBLY			14
		AR											PLATE, 1/4	ASTM A36		15
		4											ANGLE, 3 X 3 X 1/4 X 29 LG	ASTM A36		16
		4											ANGLE, 3 X 3 X 1/4 X 13 LG	ASTM A36		17
			AR				AR	AR		AR			PIPE, 4 SCHED 40S	ASTM A312 GR TP 304L		18
				AR					AR				PIPE, 3 SCHED 40S	ASTM A312 GR TP 304L		19
								AR					PIPE, 2 SCHED 40S	ASTM A312 TP 304L		20
					AR	AR							PIPE, 1 SCHED 40S	ASTM A312 TP 304L		21
					AR								TUBE, 1/2 OD X .049 WALL	ASTM A269 TP 316L		22
	1												PIPE NIPPLE, SCHED 40S 2 NPT X 10 LG	ASTM A312 TP 304L		23
	1												PIPE NIPPLE, SCHED 40S 2 NPT X 8 LG	ASTM A312 TP 304L		24
	1												PIPE NIPPLE, SCHED 40S 2 NPT X 6 LG	ASTM A312 TP 304L		25
								3					PIPE NIPPLE, SCHED 40S 1/2 NPT X 3 LG	ASTM A312 TP 304L		26
			2				6	8		6			FLANGE, 4 WN RF, CL150	ASTM A182 GR F 304L		27
				1					6				FLANGE, 3 WN RF, CL150	ASTM A182 GR F 304L		28
								2					FLANGE, 2 WN RF, CL150	ASTM A182 GR F 304L		29
						10							FLANGE, 1 WN RF, CL150	ASTM A182 304L		30
					2								FLANGE, 1 SO RF, CL150	ASTM A182 304L		31
						1							FLANGE, 1 BLIND RF, CL150	ASTM A182 304L		32
							2						ELBOW, 4 LR 90 DEG SCHED 40S BW	ASTM A403 WP-S 304L		33
						1							ELBOW, 1 LR 90 DEG SCHED 40S BW	ASTM A403 WP-S 304L		34
							1	1		1			ELBOW 4 LR 45 DEG SCHED 40S BW	ASTM A403 WP-S 304L		35
				1					1				ELBOW 3 LR 45 DEG SCHED 40S BW	ASTM A403 WP-S 304L		36
						1							ELBOW 1 LR 45 DEG SCHED 40S BW	ASTM A403 WP-S 304L		37
	2												ELBOW, 2 FNPT 90 DEG, CL2000	ASME B16.11		38
						4							TEE, 1 SCHED 40S BW	ASTM A403 WP-S 304L		39
					1								TEE, 1 NPT, CL150	ASTM A182 TP 304L		40
								1					TEE, 1/2 NPT, CL3000			41
								2					REDUCER CONCENTRIC, 4 X 2	ASTM A403 WP-S 304L		42
					1							SS-810-3	TEE, 1/2 TUBE OD	SWAGELOK		43
					1							SS-810-9	UNION ELBOW, 90 DEG, 1/2 TUBE OD	SWAGELOK		44
					2							SS-810-1-4	MALE CONNECTOR, 1/4 NPT X 1/2 TUBE OD	SWAGELOK		45
					2							SS-810-7-12	FEMALE CONNECTOR, 3/4 FNPT X 1/2 TUBE OD	SWAGELOK		46
					1							SS-810-P	PLUG, 1/2 FNPT	SWAGELOK		47
				1								(4565T342)	THREDOLET, 3/4 FNPT	(McMASTER CARR)		48
								1				(456T332)	THREDOLET, 1/2 FNPT	(McMASTER CARR)		49
				1								(4464K255)	HEX PLUG, 3/4 NPT	(McMASTER CARR)		50

(SEE CONTINUED ON SHEET 2)

PAUL M. DORSH — STATE OF WASHINGTON — 41918 — REGISTERED PROFESSIONAL ENGINEER

5/26/2020

DATE: May 26, 2020 — HANFORD RELEASE

DWG NUMBER	TITLE
DRAWING TRACEABILITY LIST	

REF NUMBER	TITLE
H-15-38	LERF BASIN 41
H-2-838745	DRAWING LIST/TITLE SHEET
REFERENCES	
NEXT USED ON H-2-838767	

REV	DESCRIPTION
0	RELEASED PER EDT-882463
REVISIONS	

BLDG NO 242-AL 242AL-41

INDEX NO 8407

CAUTION: NOT COMPLETE WITHOUT CURRENT CHANGE DOCUMENTS FROM DATABASE

	NAME	DATE	COMPANY
DRAFTER	W T ARNDT	05/26/20	MSPS
DRAFTING OVERSIGHT	H A MENDEZ	05/26/20	MSPS
ENGINEERING PEER REVIEWER	C C JOSLYN	05/26/20	MSPS
DESIGN ENGINEER	P M DORSH	05/26/20	MSPS
DESIGN AUTHORITY	N W WILSON	05/26/20	MSPS

U.S. DEPARTMENT OF ENERGY
Office of River Protection

LERF BASIN 41
CATCH BASIN PIPING
NOTES AND PARTS LIST

SIZE F — DRAWING NUMBER H-2-838771 — SHEET 1 — REV 00

SCALE SHOWN

29778 — DOE_RL_F.DWG (SEPTEMBER 2014)

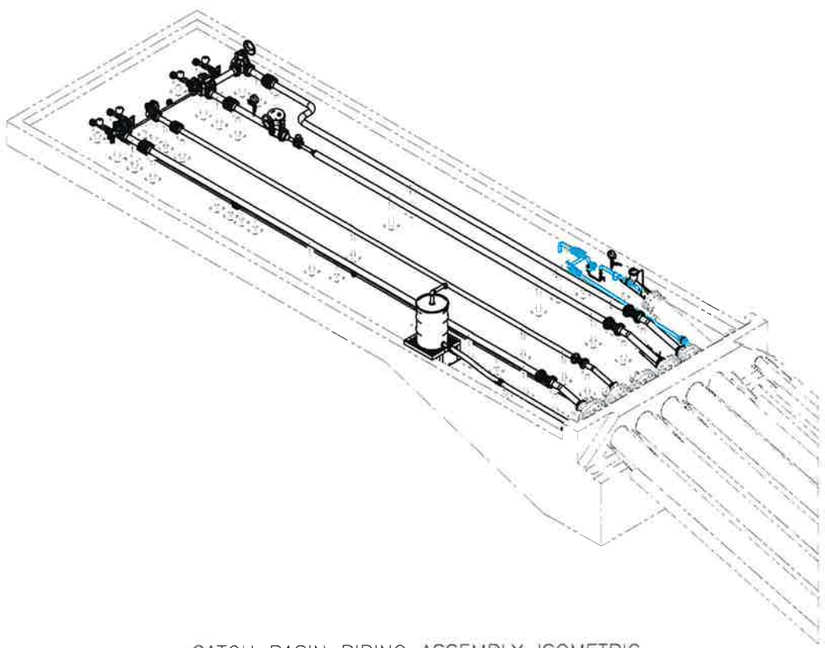

CATCH BASIN PIPING ASSEMBLY ISOMETRIC

SCALE: NO SCALE

PARTS/MATERIAL LIST

QTY -120	QTY -110	QTY -100	QTY -090	QTY -080	QTY -070	QTY -060	QTY -050	QTY -040	QTY -030	QTY -020	QTY -010	PART/DASH NUMBER	NOMENCLATURE/DESCRIPTION	MATERIAL/REFERENCE	SHT	ITEM NO
		1											GRATING, 1 1/2" X 3/16" RECTANGULAR BAR, GW SERIES, GALVANIZED, 28 X 28	MCNICHOLS		51
							1	1				170400-11A02-SSTT-ND-0024	BALL VALVE, 3 WAY, 4 INCH	FLOWTEK		52
								1				150400-11000SSUT-NB-0001	BALL VALVE, 2 WAY, 4 INCH, FP F15, 60 DEG V PORT	FLOWTEK		53
										1		150400-11000SSTT-NN-0001	BALL VALVE, 2 WAY, 4 INCH, FP F15	FLOWTEK		54
									1			140300-11000SSTT-NN-0001	BALL VALVE, 2 WAY, 3 INCH, FP F15	FLOWTEK		55
					1							150100-11000SSTT-NN-0001	BALL VALVE, 1 INCH, FP F15	FLOWTEK		56
								2				(46495K210)	BALL VALVE, 1/2	(MCMASTER CARR)		57
					1							SS-45S8-SH	VALVE, ON-OFF, 1/2 TUBE OD	SWAGELOK		58
								1				700501-113G0536/K	MOTOR OPERATED ACTUATOR	BRAY		59
							1	1				FTG33	MANUAL OPERATOR, 30:1	FLOWTEK		60
									1	1		FTG22	MANUAL OPERATOR, 22:1	BRAY		61
									1			EZ-011S	MOUNTING BRACKET	FLOWTEK		62
										1			MOUNTING BRACKET	FLOWTEK		63
								1				EZ-013S	MOUNTING BRACKET	FLOWTEK		64
							1	1				EZ-045S	MANUALY OPERATOR MOUNTING BRACKET	FLOWTEK		65
							1	1		1		MNLC150FL0400	EXPANSION JOINT, 4 INCH	METRAFLEX		66
									1			MNLC150FL0300	EXPANSION JOINT, 3 INCH	METRAFLEX		67
							1	1		1			DURCOR FLANGED FLEXIJOINT, 4 INCH, 5 CONVOLUTIONS	ETHYLENE		68
									1				DURCOR FLANGED FLEXIJOINT, 3 INCH, 4 CONVOLUTIONS	ETHYLENE		69
						1					4		DURCOR FLANGED FLEXIJOINT, 1 INCH, 4 CONVOLUTIONS	ETHYLENE		70
	1											(6795K54)	CAM AND GROOVE HOSE COUPLING, 2 FNPT, SSTL	(McMASTER CARR)		71
				1								(53015K570)	CAM AND GROOVE HOSE COUPLING, 3 NPT, SSTL	(McMASTER CARR)		72
2												(53015K167)	CAM AND GROOVE HOSE COUPLING FEMALE X BARBED, 3 INCH, SSTL	(McMASTER CARR)		73
							5	7		5	3		GASKET, 1/8 THK, 4 INCH, RF, CL150	GARLOCK		74
									5		2		GASKET, 1/8 THK, 3 INCH, RF, CL150	GARLOCK		75
								2					GASKET, 1/8 THK, 2 INCH RF, CL150	GARLOCK		76
											1		GASKET, 1/8 THK, 1 1/2 INCH RF, CL150	GARLOCK		77
						4					9		GASKET, 1/8 THK, 1 INCH, RF, CL150	GARLOCK		78
AR													HOSE, 3 INCH, PICORD EXTREMEFLEX FOOD GRADE X X FT LG	GOODYEAR		79
	1												VENTSORB, 2 FNPT INLET, 2 FNPT OUTLET	CALGON CARBON		80
					1							OP-C-3	ORIFICE PLATE FLOWMETER	DWYER		81
								1				8711-TSA-020-R-5-N0-DT	MAGNETIC FLOWMETER	ROSEMOUNT		82
					1							FLT93S-1B-1A201E-4CC00-00	FLEXSWITCH	FCI		83
								1				351009 SW L 04 L XLLC4 100#	PRESSURE GAUGE, 1/2 NPT, 3 1/2 FACE, 0 TO 100 PSIG	ASHCROFT		84
					1							B4762-10600BN4W	LIQUID LEVEL GAGE, 6 INCH CENTERLINE, 3/4 NPT ADAPTERS	OIL-RITE		85
							24	40	12	24	28		STUD, 5/8-11 UNC-2A X 3 1/2 LG	ASTM A193 GR B8 CL2		86
								4					STUD, 5/8-11 UNC-2A X 6 3/8 LG	ASTM A193 GR B8 CL2		87
						8					20		STUD, 1/2-13 UNC-2A X 2 1/2 LG	ASTM A193 GR B8 CL2		88
											4		STUD, 1/2-13 UNC-2A X 3 1/4 LG	ASTM A193 GR B8 CL2		89
					4								STUD, 1/2-13 UNC-2A X 3 3/4 LG	ASTM A193 GR B8 CL2		90
							14	14	6	14			HEX BOLT, 5/8-11 UNC-2A X 1 3/4 LG	ASTM A193 GR B8 CL2		91
											16		HEX BOLT, 1/2-13 UNC-2A X 1 1/4 LG	ASTM A193 GR B8 CL2		92
							48	88	24	48	56		NUT, HEX 5/8-11 UNC-2B	ASTM A194 GR 8		93
					8	16					52		NUT, HEX 1/2-13 UNC-2B	ASTM A194 GR 8		94

(BOM CONTINUED FROM SHEET 1)

PAUL M. DORSH — STATE OF WASHINGTON — 41918 — REGISTERED PROFESSIONAL ENGINEER

5/26/2020

DATE: May 26, 2020 — HANFORD RELEASE

DWG NUMBER	TITLE
DRAWING TRACEABILITY LIST	

REF NUMBER	TITLE
REFERENCES	
NEXT USED ON SHEET 1	

REV	DESCRIPTION
0	RELEASED PER EDT-882463
REVISIONS	

BLDG NO 242-AL 242AL-41

BLDG NO 8407

CAUTION: NOT COMPLETE WITHOUT CURRENT CHANGE DOCUMENTS FROM DATABASE

	NAME	DATE
DRAWN BY	W T ARNDT	10/9/2020
DRAFTING CHECKED	H A MENDEZ	10/9/2020
ENGINEERING PEER REVIEWER	C C JOSLYN	10/9/2020
SURVEY CHECKED	P M DORSH	10/9/2020
DESIGN APPROVER	N W WILSON	10/9/2020

U.S. DEPARTMENT OF ENERGY
Office of River Protection

LERF BASIN 41
CATCH BASIN PIPING
ISOMETRIC

SIZE F — DRAWING NUMBER H-2-838771 — SHEET 2 — REV 00

SCALE SHOWN

29769

DOE_TB_F.DWG (SEPTEMBER 2014)

NOTES:
FOR GENERAL NOTES AND PARTS/MATERIAL SEE SHEET 1 AND 2.

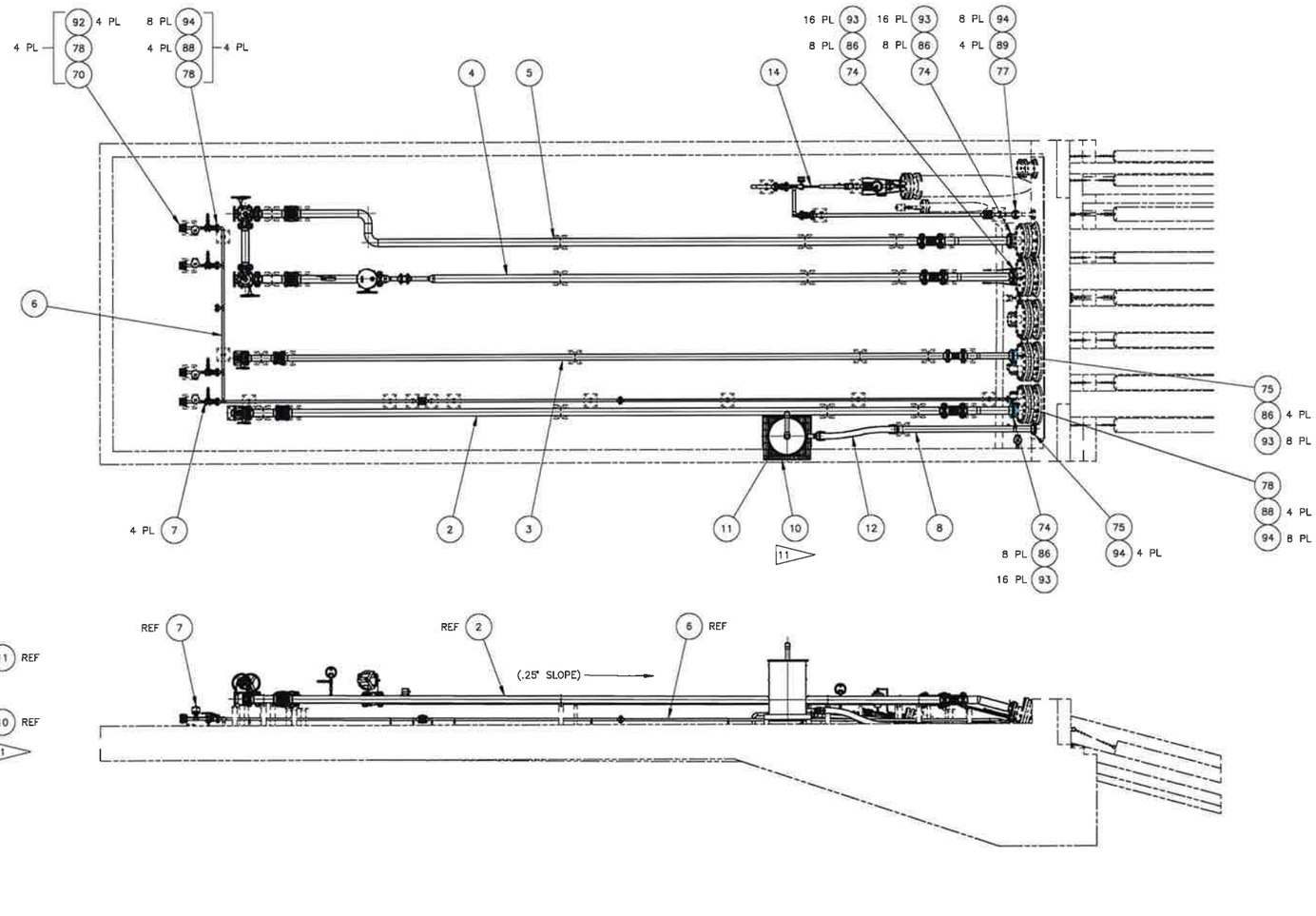

1 CATCH BASIN PIPING ASSEMBLY
SCALE: 1/32

PAUL M. DORSH
STATE OF WASHINGTON
41918
REGISTERED
PROFESSIONAL ENGINEER
5/26/2020

DATE:
May 26, 2020
HANFORD RELEASE

DWG NUMBER	TITLE
DRAWING TRACEABILITY LIST	

REF NUMBER	TITLE
REFERENCES	
NEXT USED ON SHEET 1	

REV NO	DESCRIPTION
0	RELEASED PER EDT-882463
REVISIONS	

BLDG NO 242-AL 242AL-41
INDEX NO 8407

CAUTION: NOT COMPLETE WITHOUT CURRENT CHANGE DOCUMENTS FROM DATABASE

	NAME	DATE	COMPANY
DRAFTER	W T ARNDT	04/16/20	WRPS
DRAFTING CHECKER	H A MENDEZ	04/16/20	WRPS
CONFIGURING FIELD REVIEWER	C C JOSLYN	04/16/20	WRPS
DESIGN ENGINEER	P M DORSH	04/16/20	WRPS
DESIGN AUTHORITY	N W WILSON	04/16/20	WRPS

U.S. DEPARTMENT OF ENERGY
Office of River Protection

LERF BASIN 41
CATCH BASIN PIPING
ASSEMBLY

SIZE F | DRAWING NUMBER H-2-838771 | SHEET 3 | REV 00
SCALE SHOWN

29786 DOE_TB_F.DWG (SEPTEMBER 2016)

NOTES:
FOR GENERAL NOTES AND PARTS/MATERIAL SEE SHEET 1 AND 2.

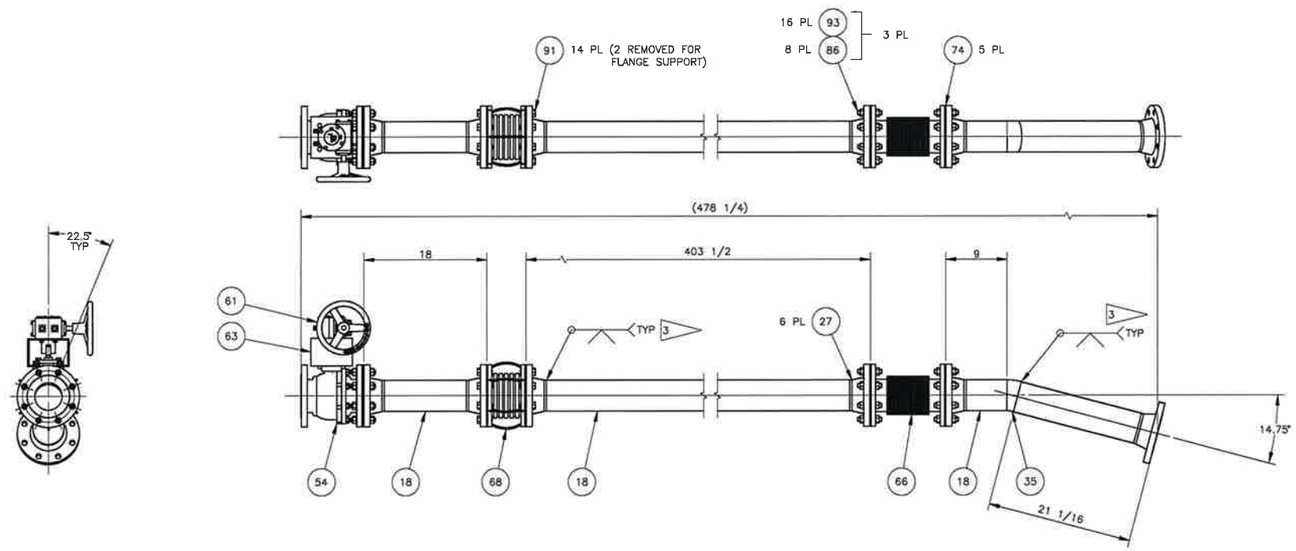

2 WTP/EMF EFFLUENT SPOOL
SCALE: 1/8

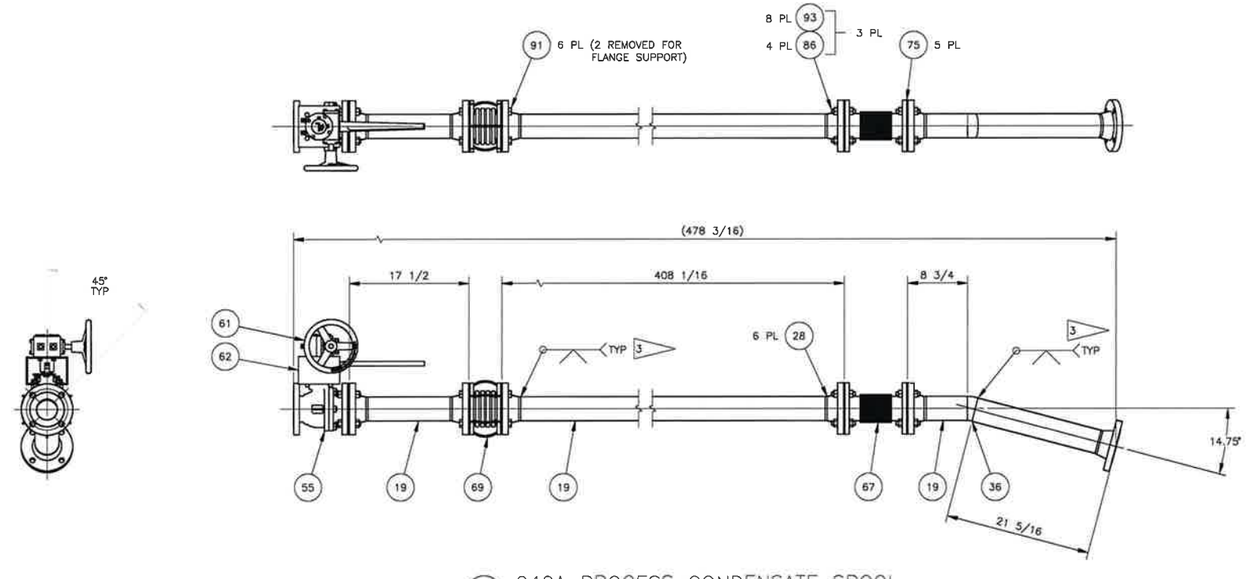

3 242A PROCESS CONDENSATE SPOOL
SCALE 1/8

PAUL M. DORSH
STATE OF WASHINGTON
41918
REGISTERED
PROFESSIONAL ENGINEER
5/26/2020

DATE:
May 26, 2020
HANFORD RELEASE

DWG NUMBER	TITLE	REF NUMBER	TITLE
DRAWING TRACEABILITY LIST		REFERENCES	
		NEXT USED ON SHEET 1	

REV	DESCRIPTION
0	RELEASED PER EDT-882463
REVISIONS	

BLDG NO 242-AL 242AL-41
INDEX NO 8407

CAUTION: NOT COMPLETE WITHOUT CURRENT CHANGE DOCUMENTS FROM DATABASE

	NAME	DATE	COMPANY
DRAFTER	W T ARNDT	05/26/2020	MSA
DRAFTING REVIEWER	H A MENDEZ	05/26/2020	MSA
ENGINEERING PEER REVIEWER	C C JOSLYN	05/26/2020	MSA
ENGINEERING CHANGES	P M DORSH	05/26/2020	MSA
DESIGN AUTHORITY	N W WILSON	05/26/2020	MSA

U.S. DEPARTMENT OF ENERGY
Office of River Protection

LERF BASIN 41
CATCH BASIN PIPING
DETAILS

SIZE F | DRAWING NUMBER H-2-838771 | SHEET 4 | REV 00
SCALE SHOWN

29774 CDC_TB_F.DWG (SEPTEMBER 2019)

NOTES:
FOR GENERAL NOTES AND PARTS/MATERIAL SEE SHEET 1 AND 2.

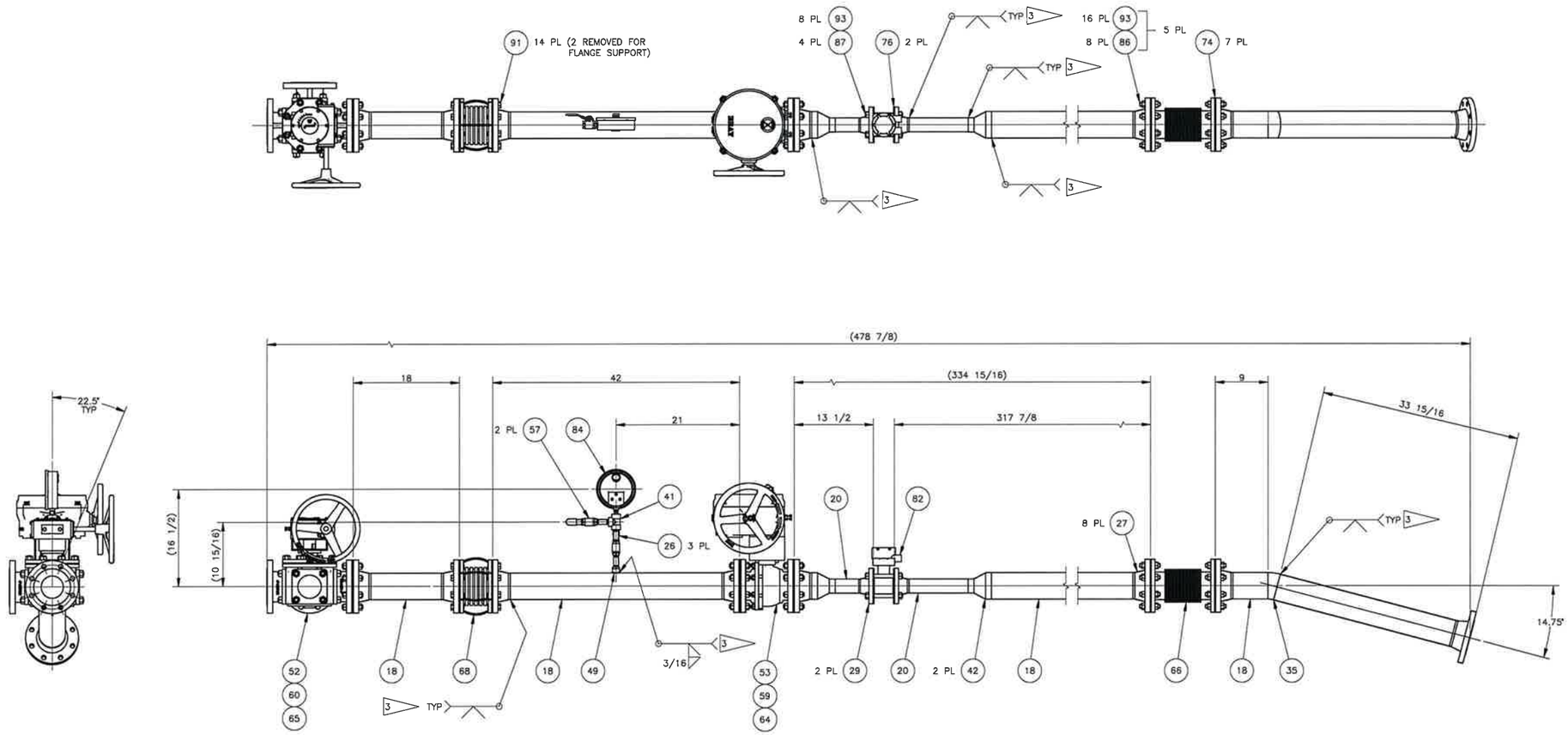

4 BASIN PUMP SPOOL
SCALE: 1/8

PAUL M. DORSH
STATE OF WASHINGTON
41918
REGISTERED
PROFESSIONAL ENGINEER
5/26/2020

DATE:
May 26, 2020
HANFORD RELEASE

DWG NUMBER	TITLE
DRAWING TRACEABILITY LIST	

REF NUMBER	TITLE
REFERENCES	
NEXT USED ON SHEET 1	

REV NO	DESCRIPTION
0	RELEASED PER EDT-882463
REVISIONS	

BLDG NO 242-AL 242AL-41
INDEX NO 8407

CAUTION: NOT COMPLETE, WITHOUT CURRENT CHANGE DOCUMENTS FROM DATABASE

	NAME	DATE	COMPANY
DRAWN BY	W T ARNDT	5/6/2020	WRPS
DESIGN ENGINEER	H A MENDEZ	5/6/2020	WRPS
ENGINEERING TECH REVIEWER	C C JOSLYN	5/6/2020	WRPS
DESIGN REVIEWER	P M DORSH	5/6/2020	WRPS
DESIGN AUTHORITY	N W WILSON	5/6/2020	WRPS

U.S. DEPARTMENT OF ENERGY
Office of River Protection

LERF BASIN 41
CATCH BASIN PIPING
ASSEMBLY

SIZE	DRAWING NUMBER	SHEET	REV
F	H-2-838771	5	00

SCALE SHOWN

29773

NOTES:
FOR GENERAL NOTES AND PARTS/MATERIAL SEE SHEET 1 AND 2.

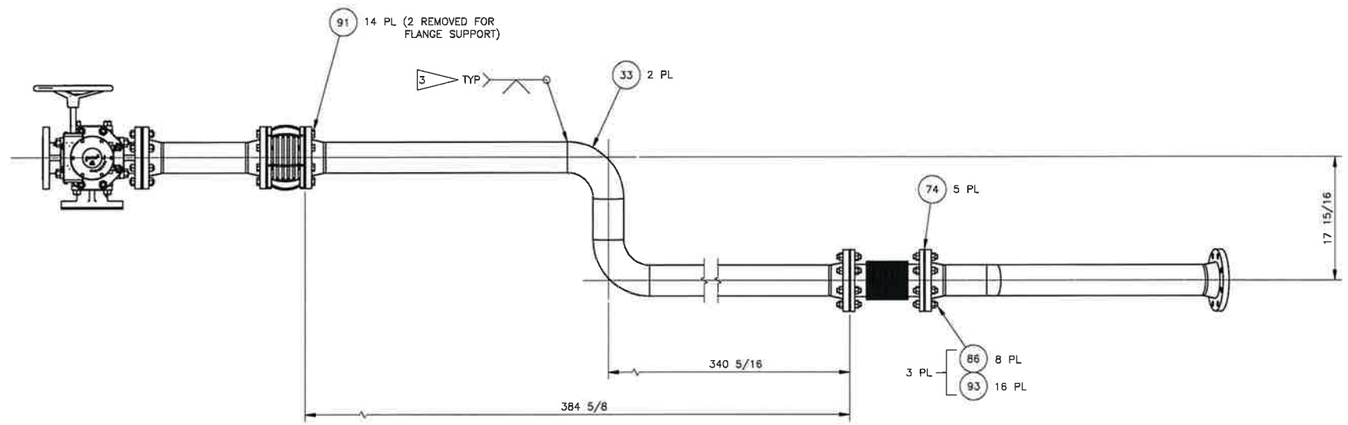

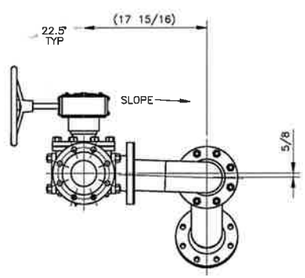

(VALVE AND ACTUATOR REMOVED FROM THIS VIEW FOR CLARITY)

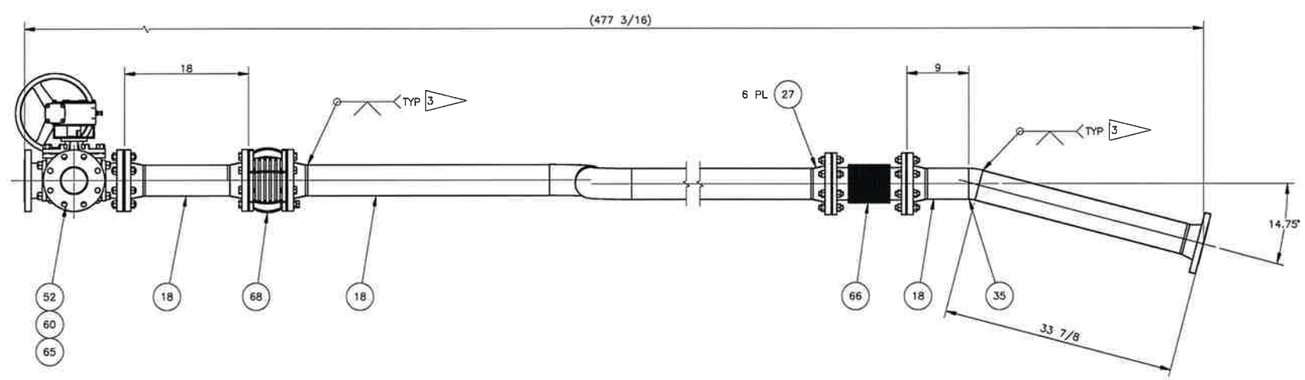

5 BASIN PUMP RECIRC/TRANSFER SPOOL
SCALE: 1/8

PAUL M. DORSH
STATE OF WASHINGTON
41918
REGISTERED
PROFESSIONAL ENGINEER
5/26/2020

DATE:
May 26, 2020
HANFORD RELEASE

DWG NUMBER	TITLE
DRAWING TRACEABILITY LIST	

REF NUMBER	TITLE
REFERENCES	
NEXT USED ON SHEET 1	

REV	DESCRIPTION
0	RELEASED PER EDT-882463
REVISIONS	

BLDG NO 242-AL 242AL-41
INDEX NO 8407

CAUTION: NOT COMPLETE WITHOUT CURRENT CHANGE DOCUMENTS FROM DATABASE

	NAME	DATE	COMPANY
DRAFTER	W L ARNOT		
DRAFTING CHECKER	H A MENDEZ		
CHALLENGE PEER REVIEWER	C C JOSLYN		
DESIGN ENGINEER	P M DORSH		
DESIGN AUTHORITY	N W WILSON		

U.S. DEPARTMENT OF ENERGY
Office of River Protection

LERF BASIN 41
CATCH BASIN PIPING
ASSEMBLY

SIZE F | DRAWING NUMBER H-2-838771 | SHEET 6 | REV 00
SCALE SHOWN
29777

NOTES:
FOR GENERAL NOTES AND PARTS/MATERIAL SEE SHEET 1 AND 2.

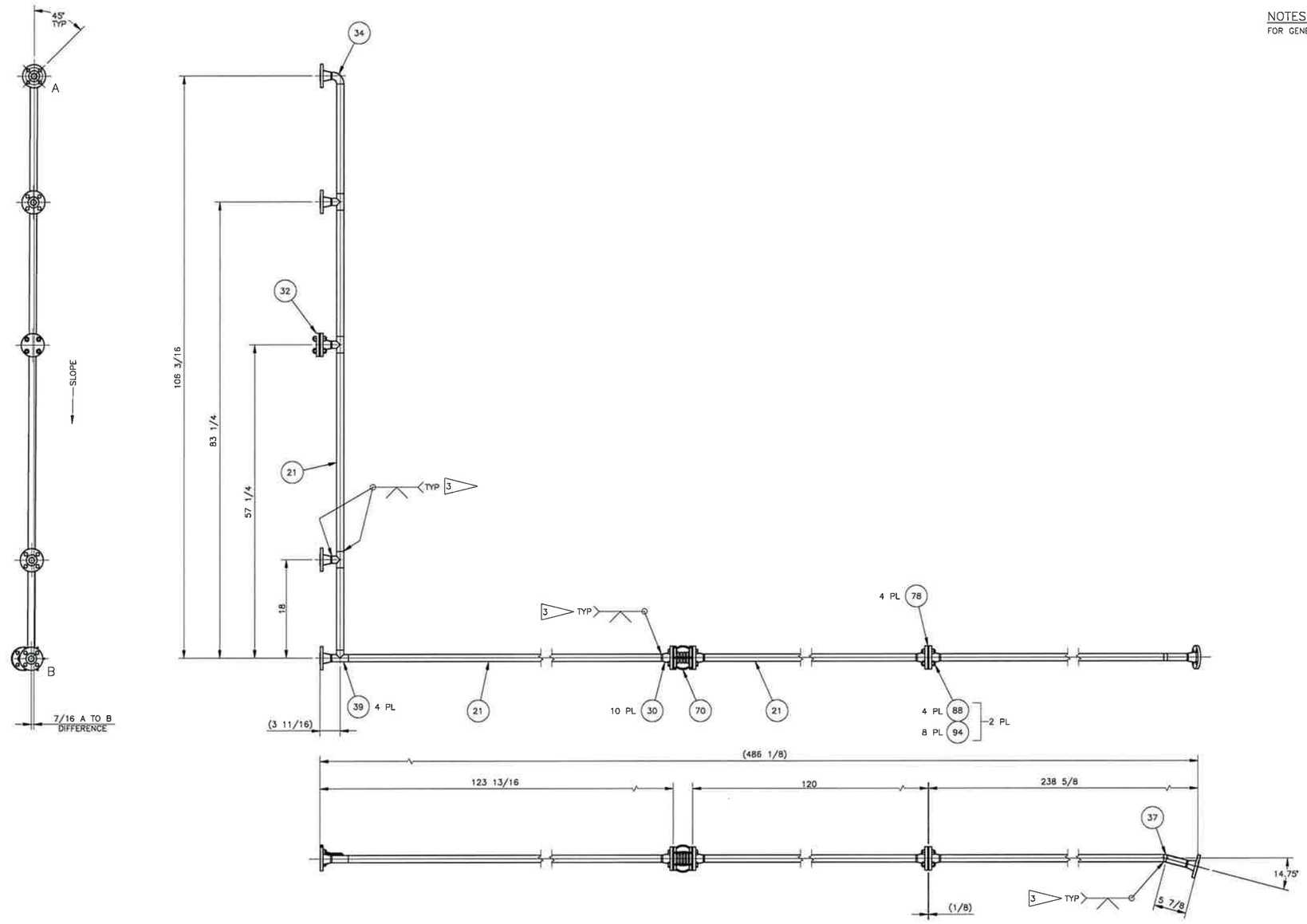

(SOME ITEMS IN THIS VIEW REMOVED FOR CLARITY)

6 DRAIN SPOOL
SCALE: 1/12

PAUL M. DORSH
STATE OF WASHINGTON
41918
REGISTERED
PROFESSIONAL ENGINEER
5/26/2020

DATE:
May 26, 2020
HANFORD RELEASE

DWG NUMBER	TITLE
DRAWING TRACEABILITY LIST	

REF NUMBER	TITLE
REFERENCES	
NEXT USED ON SHEET 1	

REV NO	DESCRIPTION
0	RELEASED PER EDT-882463
REVISIONS	

SLDC NO 242-AL 242AL-41
INDEX NO 8407

CAUTION: NOT COMPLETE WITHOUT CURRENT CHANGE DOCUMENTS FROM DATABASE

	NAME	DATE	COMPANY
DRAFTER	W T ARNDT	05/26/2020	WRPS
DRAFTING CHECKER	H A MENDEZ	05/26/2020	WRPS
CHANGE/PRE PEER REVIEWER	C C JOSLYN	05/26/2020	WRPS
CIVIL ENGINEER	P M DORSH	05/26/2020	WRPS
DESIGN AUTHORITY	N W WILSON	05/26/2020	WRPS

U.S. DEPARTMENT OF ENERGY
Office of River Protection

LERF BASIN 41
CATCH BASIN PIPING
ASSEMBLY

SIZE	DRAWING NUMBER	SHEET	REV
F	H-2-838771	7	00

SCALE SHOWN

29780

DOE_TB_F.DWG (SEPTEMBER 2019)

NOTES:
FOR GENERAL NOTES AND PARTS/MATERIAL SEE SHEET 1 AND 2.

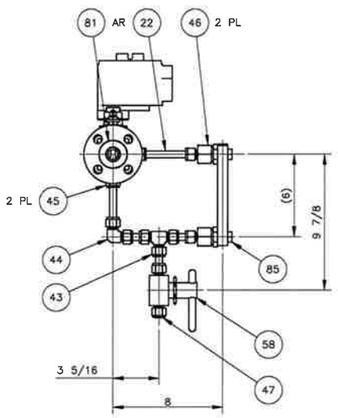

(SOME OBJECTS REMOVED FROM THIS VIEW)

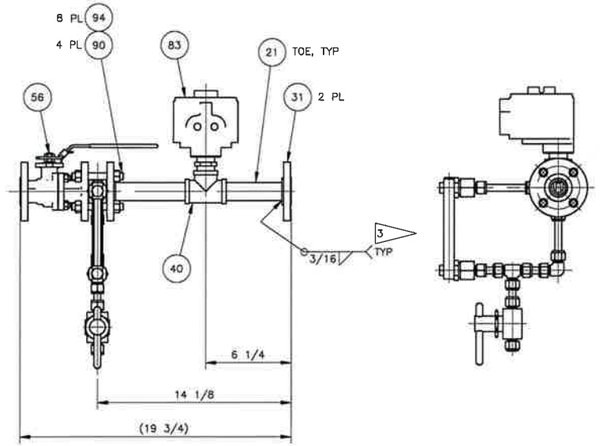

7 LEAK DETECTOR SPOOL
SCALE: 1/4

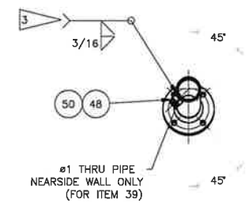

SECTION A–A
SCALE: 1/8

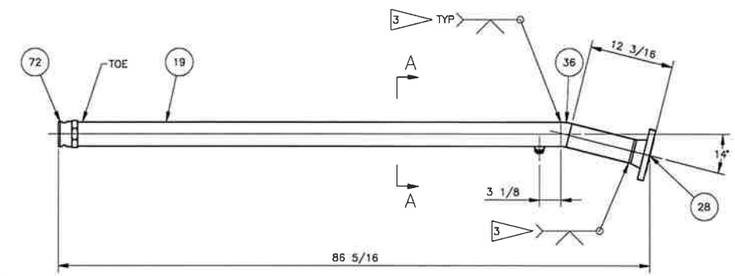

8 VENT SPOOL
SCALE: 1/8

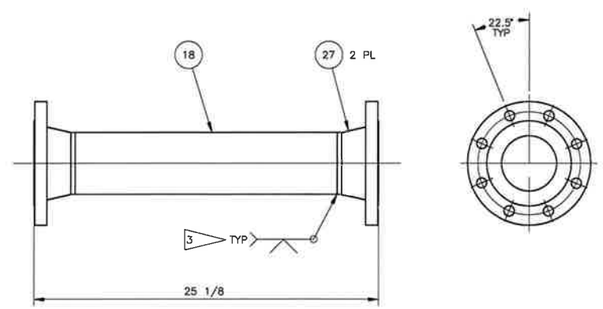

9 3-WAY TIE IN SPOOL
SCALE: 1/4

DATE:
May 26, 2020
HANFORD RELEASE

DWG NUMBER	TITLE	REF NUMBER	TITLE
DRAWING TRACEABILITY LIST		REFERENCES	
		NEXT USED ON SHEET 1	

REV	DESCRIPTION
0	RELEASED PER EDT-882463
REVISIONS	

BLDG NO 242-AL 242AL-41
INDEX NO 8407

CAUTION: NOT COMPLETE WITHOUT CURRENT CHANGE DOCUMENTS FROM DATABASE

	NAME	DATE	COMPANY
DRAFTER	W T ARNDT	05/26/20	CDPS
DRAFTING OVERSEE	H A MENDEZ	05/26/20	CDPS
ENGINEERING PEER REVIEWER	C C JOSLYN	05/26/20	CDPS
DESIGN ENGINEER	P M DORSH	05/26/20	CDPS
DESIGN AUTHORITY	N W WILSON	05/26/20	CDPS

U.S. DEPARTMENT OF ENERGY
Office of River Protection

LERF BASIN 41
CATCH BASIN PIPING
DETAILS

SIZE F | DRAWING NUMBER H-2-838771 | SHEET 8 | REV 00
SCALE SHOWN

29770

NOTES:
FOR GENERAL NOTES AND PARTS/MATERIAL SEE SHEET 1 AND 2.

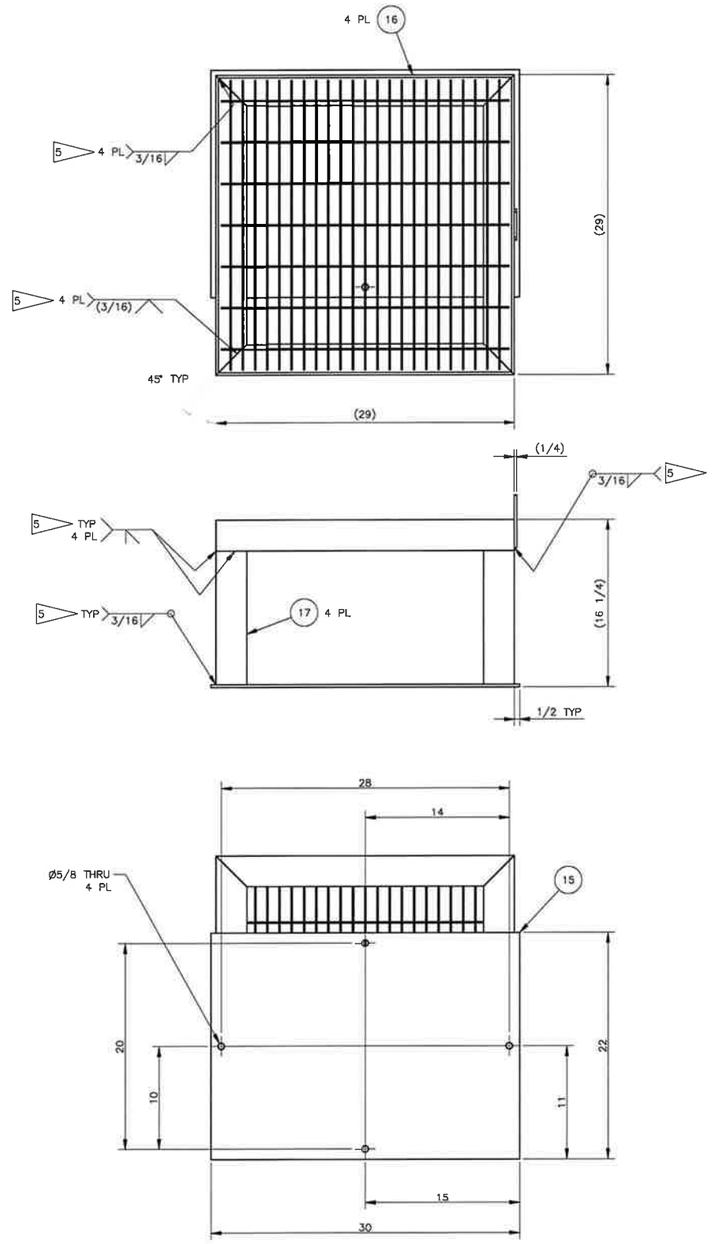

10 VENT FILTER FRAME
SCALE: 3/16
(GRATING REMOVED FOR CLARITY)

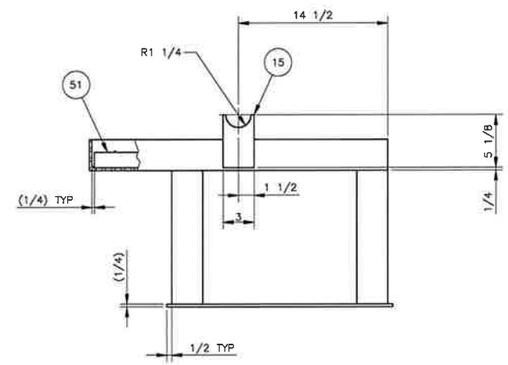

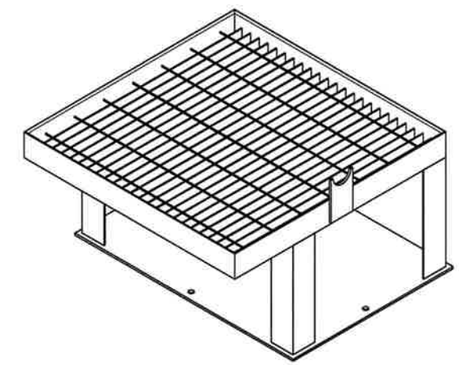

PAUL M. DORSH
STATE OF WASHINGTON
41918
REGISTERED
PROFESSIONAL ENGINEER
5/26/2020

DATE:
May 26, 2020
HANFORD RELEASE

DWG NUMBER	TITLE
DRAWING TRACEABILITY LIST	

REF NUMBER	TITLE
REFERENCES	
NEXT USED ON SHEET 1	

REV NO	DESCRIPTION
0	RELEASED PER EDT-882463
REVISIONS	

BLDG NO 242-AL 242AL-41
INDEX NO 8407

CAUTION: NOT COMPLETE WITHOUT CURRENT CHANGE DOCUMENTS FROM DATABASE

	NAME	DATE	COMPANY
DRAFTER	W T ARNDT	05/26/2020	MSA
DESIGN ENGINEER	H A MENDEZ	05/26/2020	MSA
CHANGE CONTROL REVIEWER	C C JOSLYN	05/26/2020	MSA
DESIGN REVIEWER	P M DORSH	05/26/2020	MSA
PROJECT ACCEPTANCE	N W WILSON	05/26/2020	MSA

U.S. DEPARTMENT OF ENERGY
Office of River Protection

LERF BASIN 41
CATCH BASIN PIPING
ASSEMBLY

SIZE	DRAWING NUMBER	SHEET	REV
F	H-2-838771	9	00

SCALE SHOWN

29781

NOTES:
FOR GENERAL NOTES AND PARTS/MATERIAL SEE SHEET 1 AND 2.

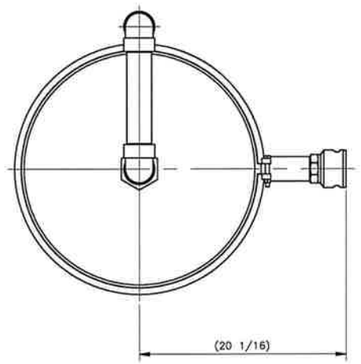

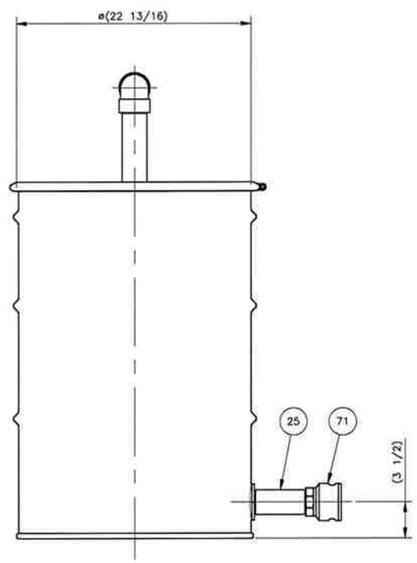

11 VENT FILTER ASSEMBLY
SCALE: 1/8

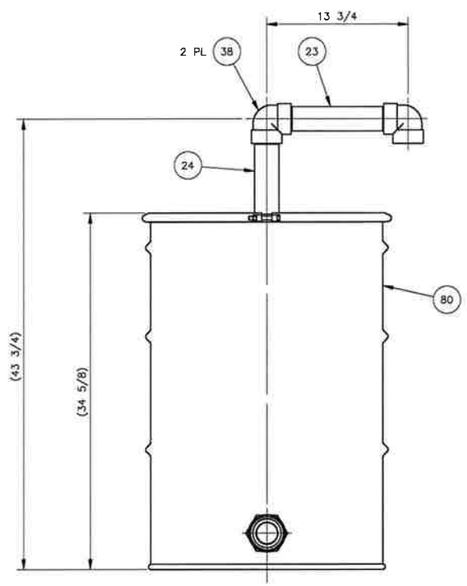

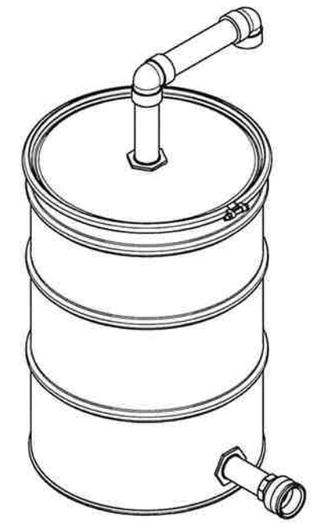

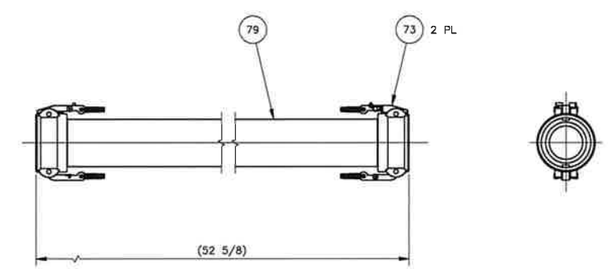

12 VENT HOSE ASSEMBLY
SCALE: 1/4

PAUL M. DORSH
STATE OF WASHINGTON
41918
REGISTERED
PROFESSIONAL ENGINEER
5/26/2020

DATE:
May 26, 2020
HANFORD RELEASE

DWG NUMBER	TITLE
DRAWING TRACEABILITY LIST	

REF NUMBER	TITLE
REFERENCES	
NEXT USED ON SHEET 1	

REV	DESCRIPTION
0	RELEASED PER EDT-882463
REVISIONS	

BLDG NO 242-AL 242AL-41
INDEX NO 8407

CAUTION: NOT COMPLETE WITHOUT CURRENT CHANGE DOCUMENTS FROM DATABASE

	NAME	DATE
DRAFTER	W T ARNDT	5/26/20
DESIGN CHECKER	H A MENDEZ	5/26/20
DOCUMENTING DES REVIEWER	C C JOSLYN	5/26/20
DESIGN ENGINEER	P M DORSH	5/26/20
DESIGN AUTHORITY	N W WILSON	5/26/20

U.S. DEPARTMENT OF ENERGY
Office of River Protection

LERF BASIN 41
CATCH BASIN PIPING
DETAILS

SIZE F | DRAWING NUMBER H-2-838771 | SHEET 10 | REV 00
SCALE SHOWN

29784

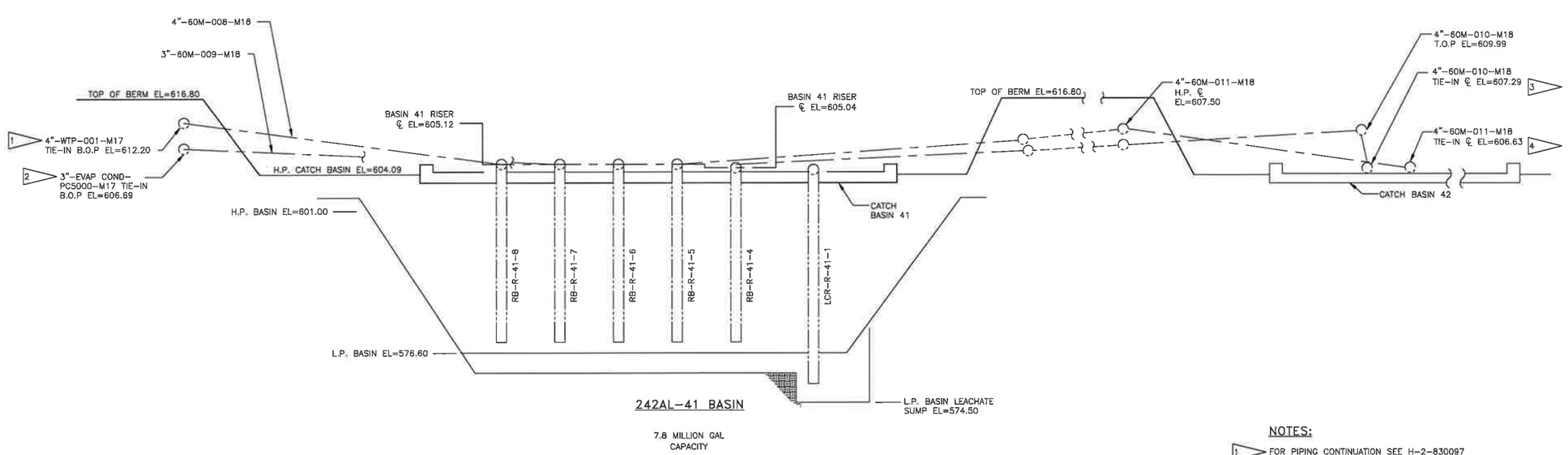

NOTES:

1. FOR PIPING CONTINUATION SEE H-2-830097
2. FOR PIPING CONTINUATION SEE H-2-79610
3. FOR PIPING CONTINUATION SEE H-2-830099 SH 1-2
4. FOR PIPING CONTINUATION SEE SECTION VIEW B ON H-2-79616

PAUL M. DORSH
STATE OF WASHINGTON
41918
REGISTERED
PROFESSIONAL ENGINEER
5/26/2020

DATE:
May 26, 2020
HANFORD RELEASE

DWG NUMBER	TITLE
H-2-838745	DRAWING LIST/TITLE SHEET

DRAWING TRACEABILITY LIST

REF NUMBER	TITLE
	REFERENCES

NEXT USED ON

REV NO	DESCRIPTION
0	RELEASED PER EDT-882463

REVISIONS

BLDG NO: 242-AL, 242AL-41

INDEX NO: 8512

CAUTION: NOT COMPLETE WITHOUT CURRENT CHANGE DOCUMENTS FROM DATABASE

	NAME	DATE	COMPANY
REVIEW	D. E. CHAPMAN	05/26/2020	WRPS
DESIGN LEAD	W. T. ARNDT	05/26/2020	WRPS
ENGINEERING PEER REVIEWER	C. C. JOSLYN	05/26/2020	WRPS
DESIGN ENGINEER	P. M. DORSH	05/26/2020	WRPS
DESIGN AUTHORITY	N. W. WILSON	05/26/2020	WRPS

U.S. DEPARTMENT OF ENERGY
Office of River Protection

LERF BASIN 41
MECHANICAL
HYDRAULIC DIAGRAM

SIZE F | DRAWING NUMBER H-2-838774 | SHEET 1 | REV 00

SCALE NONE

29783

DOC_TTL_F.DWG (SEPTEMBER 2016)

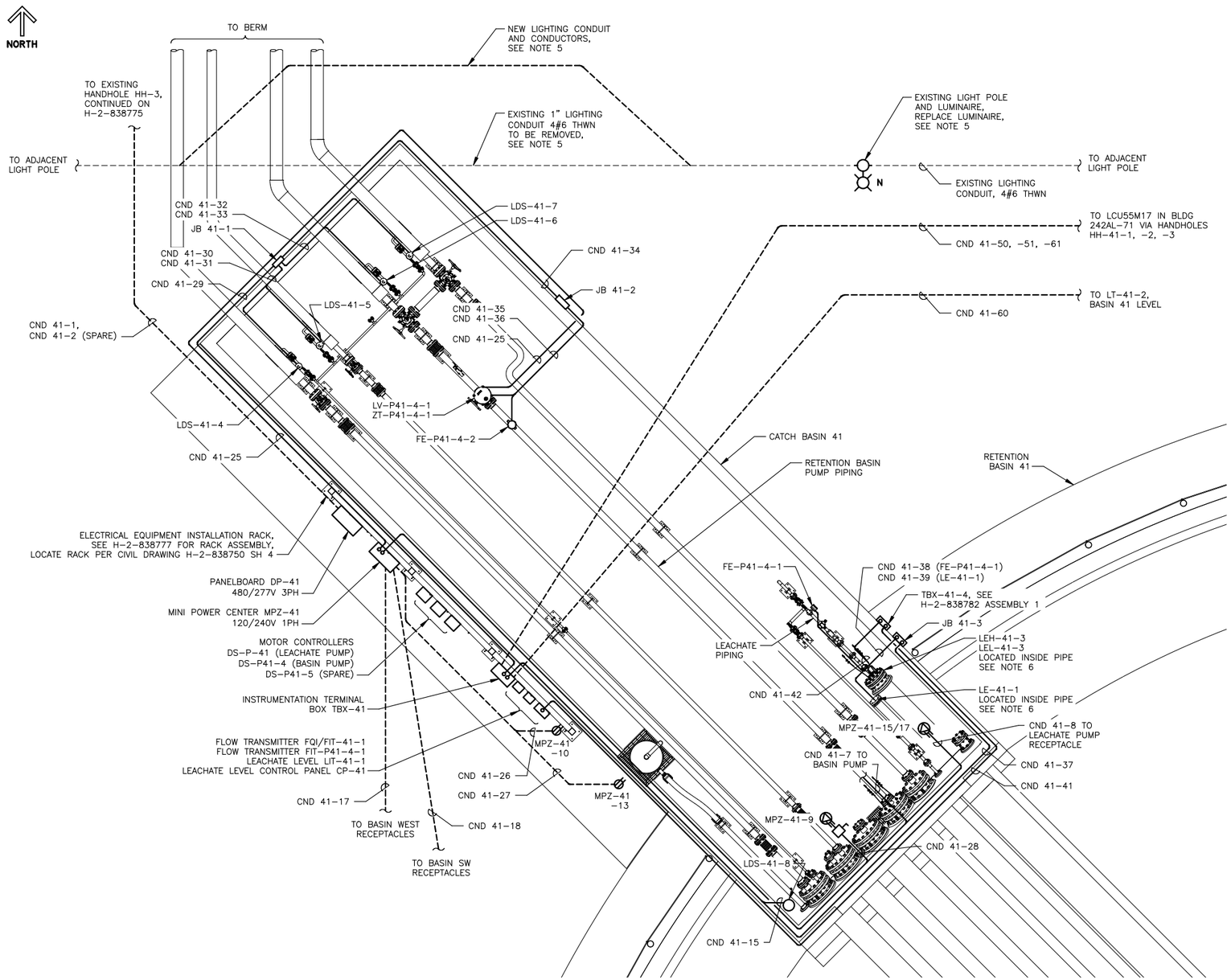

ENLARGED POWER AND INSTRUMENTATION PLAN

SCALE: 3/8"=1'-0"

SEE DWG: H-2-838775-1

NOTES:

1. SEE DRAWING H-2-838746 FOR ABBREVIATIONS, LEGEND & GENERAL NOTES.
2. INSTALLATION SHALL BE IN ACCORDANCE WITH 2017 NATIONAL ELECTRICAL CODE AND CONSTRUCTION SPECIFICATION RPP-SPEC-63632.
3. FOR CONDUIT SCHEDULE AND WIRE RUN LIST, SEE H-2-79687. FOR EXISTING CONDUIT AND ELECTRICAL EQUIPMENT, SEE H-2-79667.
4. CONDUIT INSTALLED BELOW GRADE SHALL BE PVC-COATED RIGID GALVANIZED STEEL. CONDUIT INSTALLED ABOVE GRADE SHALL BE RIGID GALVANIZED STEEL UNLESS OTHERWISE NOTED. CONDUIT AND GROUNDING CONDUCTORS ARE SHOWN DIAGRAMMATICALLY AND MAY BE FIELD ROUTED EXCEPT WHERE DIMENSIONS ARE SHOWN.
5. REMOVE AND REROUTE 1" LIGHTING CONDUIT AROUND 242AL-41 CATCH BASIN. INSTALL NEW 4#6 CONDUCTORS BETWEEN LIGHT POLES. REPLACE EXISTING POLE-MOUNT LIGHTING FIXTURE WITH BEACON PRODUCTS VIPER L SERIES VP-L-96L-395-4K7-5QM.
6. WIRE RUNS FROM DEVICE TO INSTRUMENT TERMINAL BOX TBX-41 NOT TO EXCEED 75 LINEAR FEET.

LEGEND:

- EXISTING BELOW GRADE CONDUIT
- NEW BELOW GRADE CONDUIT
- HC — HEAT TRACE CABLE
- N — EXISTING LIGHT POLE, NEW LUMINAIRE
- MPZ-41-X — RECEPTACLE, WEATHERPROOF, NEMA 5-20R 125V 20A, WEATHERPROOF BOX AND WHILE-IN-USE COVER
- MPZ-41-X — RECEPTACLE, WEATHERPROOF, 250V 20A 3P SPECIAL PURPOSE TO MATCH LEACHATE PUMP PLUG, WEATHERPROOF BOX AND WHILE-IN-USE COVER
- MPZ-41-X — RECEPTACLE AND SWITCH COMBO, WEATHERPROOF, NEMA 5-20R 125V 20A, WEATHERPROOF BOX AND WHILE-IN-USE COVER WITH LOCKABLE ON/OFF TOGGLE SWITCH

DATE: May 20,2020 HANFORD RELEASE

DWG NUMBER	TITLE
DRAWING TRACEABILITY LIST	

REF NUMBER	TITLE
H-2-838745	DRAWING LIST/TITLE SHEET
REFERENCES	
NEXT USED ON H-2-838775	

REV NO	DESCRIPTION
0	RELEASED PER EDT-882464
REVISIONS	

BLDG NO: 242-AL, 242AL-41

INDEX NO: 5901, 7301

CAUTION: NOT COMPLETE WITHOUT CURRENT CHANGE DOCUMENTS FROM DATABASE

	NAME	DATE	COMPANY
DRAFTER	L R CONLEY	05/04/2020	WRPS
DRAWING CHECKER	D R CHAPMAN	05/04/2020	WRPS
ENGINEERING PEER REVIEWER	S P O'MEARA	05/04/2020	WRPS
DESIGN ENGINEER	L B WEIDNER	05/04/2020	WRPS
DESIGN AUTHORITY	N W WILSON	05/13/2020	WRPS

U.S. DEPARTMENT OF ENERGY
Office of River Protection

LERF BASIN 41 ELECTRICAL POWER AND INSTM PLAN

SIZE	DRAWING NUMBER	SHEET	REV
F	H-2-838776	1	00

SCALE SHOWN

28657 1 DOE_TB_F.DWG (SEPTEMBER 2019)

NORTH

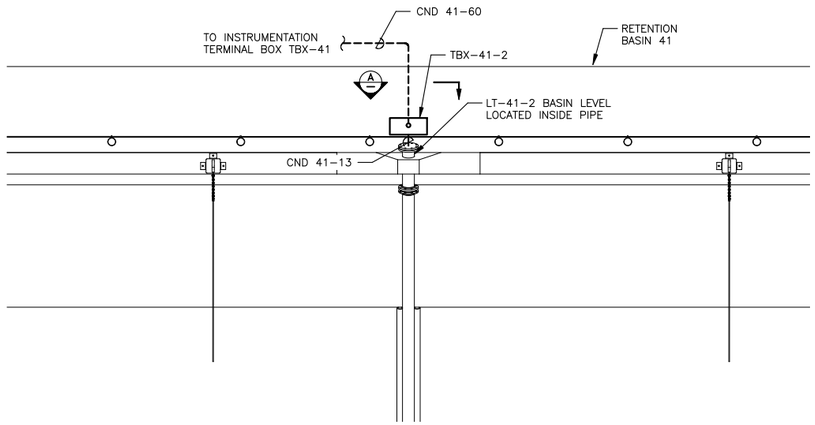

ENLARGED POWER AND INSTRUMENTATION PLAN

SCALE: 3/8"=1'-0" SEE DWG: H-2-838775-1

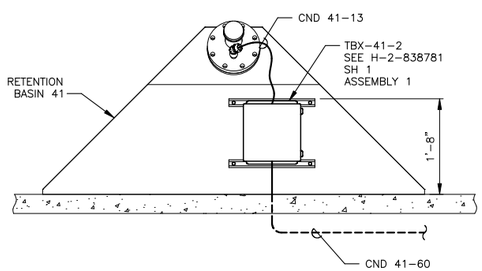

A ELEVATION TBX-41-2

SCALE: 1"=1'-0"

NOTES:

1. SEE DRAWING H-2-838746 FOR ABBREVIATIONS, LEGEND & GENERAL NOTES.
2. INSTALLATION SHALL BE IN ACCORDANCE WITH 2017 NATIONAL ELECTRICAL CODE AND CONSTRUCTION SPECIFICATION RPP-SPEC-63632.
3. FOR CONDUIT SCHEDULE AND WIRE RUN LIST, SEE H-2-79687. FOR EXISTING CONDUIT AND ELECTRICAL EQUIPMENT, SEE H-2-79667.
4. CONDUIT INSTALLED BELOW GRADE SHALL BE PVC-COATED RIGID GALVANIZED STEEL. CONDUIT INSTALLED ABOVE GRADE SHALL BE RIGID GALVANIZED STEEL UNLESS OTHERWISE NOTED. CONDUIT AND GROUNDING CONDUCTORS ARE SHOWN DIAGRAMMATICALLY AND MAY BE FIELD ROUTED EXCEPT WHERE DIMENSIONS ARE SHOWN.

LEGEND:

------ NEW BELOW GRADE CONDUIT

DATE: May 20,2020 HANFORD RELEASE

DWG NUMBER	TITLE
DRAWING TRACEABILITY LIST	

REF NUMBER	TITLE
H-2-838745	DRAWING LIST/TITLE SHEET
REFERENCES	
NEXT USED ON H-2-838775	

REV NO	DESCRIPTION
0	RELEASED PER EDT-882464
REVISIONS	

BLDG NO: 242-AL, 242AL-41

INDEX NO: 5901, 7301

CAUTION: NOT COMPLETE WITHOUT CURRENT CHANGE DOCUMENTS FROM DATABASE

	NAME	DATE	COMPANY
DRAWN	L R CONLEY	05/06/2020	WRPS
DRAWING CHECKER	V F SALYERS	05/06/2020	WRPS
ENGINEERING PEER REVIEWER	S P O'MEARA	05/14/2020	WRPS
DESIGN ENGINEER	T J LOZANO	05/04/2020	WRPS
DESIGN AUTHORITY	N W WILSON	05/13/2020	WRPS

U.S. DEPARTMENT OF ENERGY
Office of River Protection

LERF BASIN 41
ELECTRICAL
POWER AND INSTM PLAN

SIZE	DRAWING NUMBER	SHEET	REV
F	H-2-838776	2	00

SCALE SHOWN

28666

DOE_TB_F.DWG (SEPTEMBER 2019)

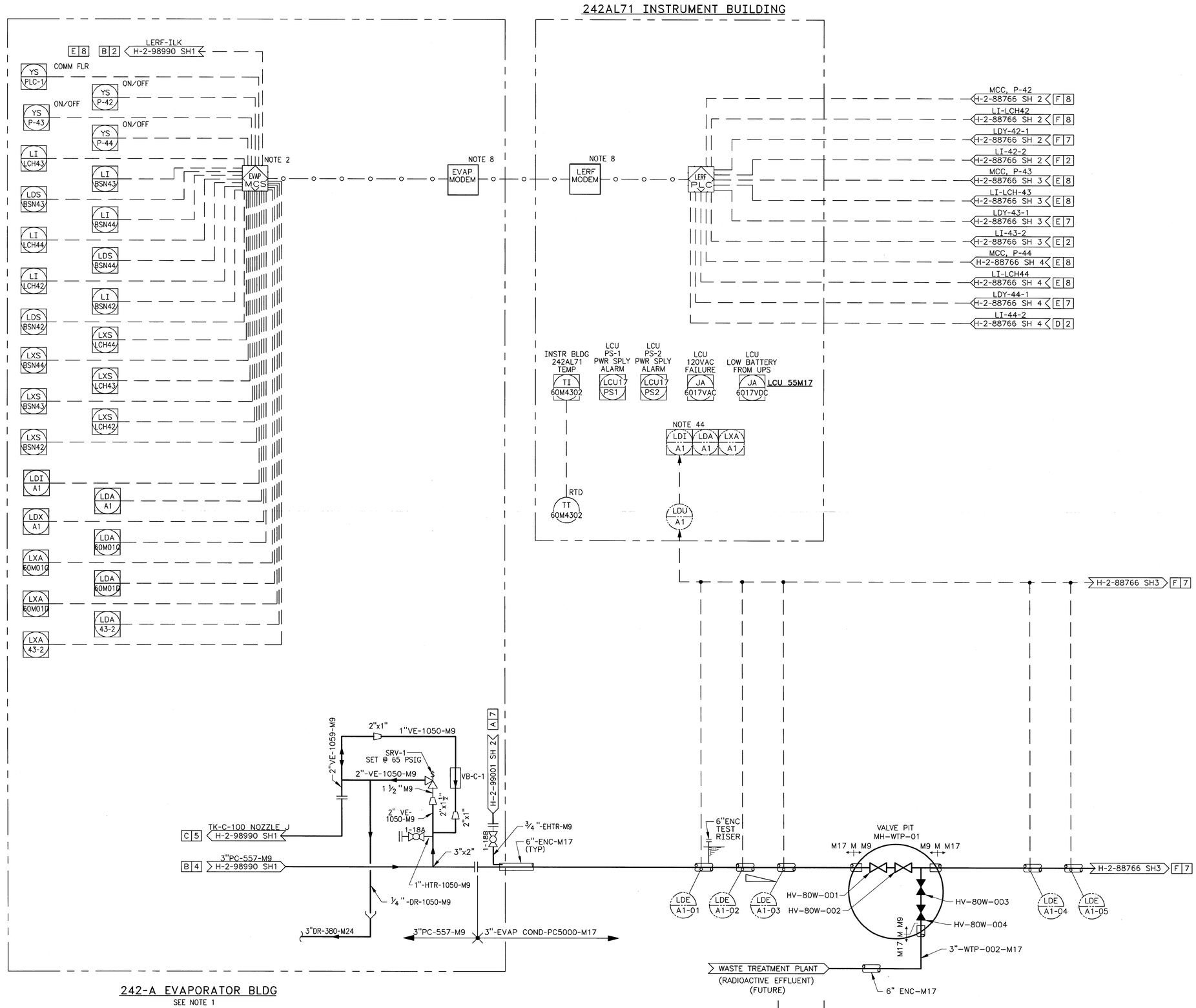

NOTES:

1. FOR ADDITIONAL NOTES AND SYMBOL LEGEND SEE DWG H-2-79601, SH 1.
2. OPERATING CONTRACTOR TO REPROGRAM EXISTING EVAP-MCS-10 AS REQUIRED. (EXISTING SIGNALS TO 242A MCS NOT SHOWN, SEE DWG H-2-79601, SH 2).
3. DELETED
4. AIR PRESSURE SHALL NOT EXCEED 15 PSIG PER M-17 PIPING MANUFACTURER RECOMMENDATION.
5. MODIFY ETF SURGE TANK 2925E-60A-TK-1 "HIGH" LEVEL FROM ETF MCS TO NEW MCS (REFERENCE DWG H-2-89337, SH 1).
6. MODIFY ETF SURGE TANK INLET VALVES AOV-60A055 AND AOV-60A056 POSITION FROM ETF MCS TO NEW MCS (REFERENCE DWG H-2-88974).
7. MODIFY EXISTING 242A MCS INTERLOCK PER DWG H-2-88816, SH 1.
8. RADIRECT ASMI-52 DSL MODEM.
9. RUPTURE DISKS TO BE OSECO 1.5" TYPE PLR NICKEL NONFRAGMENTING RUPTURE DISK IN 1.5" TYPE PRDI 316SS RUPTURE DISK HOLDER, 150 LB. ANSI OR ENGINEERING APPROVED EQUAL. RUPTURE DISK TO BE RATED FOR A BURST PRESSURE OF 7 PSIG @ 72 DEGREES F, 0% MANUFACTURING RANGE.
10. H-2-88815 CONTAINS SOFTWARE THAT PROVIDES SHUTDOWN TO LERF TRANSFER PUMPS IN THE EVENT OF LOW FLOW. THE FLOW SWITCH ON THE PUMP IS CAPABLE OF PROVIDING THE SAME PROTECTION TO THE PUMP. HOWEVER THE SWITCH IS NOT ADJUSTABLE AND MAY TRIP AT A FLOW HIGHER THAN NECESSARY. IN THE EVENT THAT A LOWER FLOW IS REQUIRED OR IF THE SWITCH BECOMES UNRELIABLE, THE SWITCH MAY BE JUMPERED OUT VIA THE CORRECTIVE MAINTENANCE PROGRAM.
11. DELETED
12. DELETED
13. MODIFY ETF SURGE TANK 2025E-60A-TK-1 CONTINUOUS LEVEL FROM ETF MCS TO NEW MCS (REFERENCE DWG H-2-89337, SH 1)
14. DELETED
15. DELETED
16. DELETED
17. DELETED
18. DELETED
19. DELETED
20. DELETED
21. PROVIDE ENCASEMENT TEST RISERS APPROXIMATELY EVERY 100 FEET.
22. INSTALL LDE 60M01D IN EXISTING RISER.
23. DELETED
24. DELETED
25. DELETED
26. DELETED
27. DELETED
28. DELETED
29. DELETED
30. PROVIDE LEAK DETECTION APPROXIMATELY EVERY 1000 FEET OF ENCASED PIPE.
31. DELETED
32. INSTALL LDE 60M01C IN EXISTING RISER.
33. DELETED
34. DELETED
35. MODIFY EXISTING BASIN AND LEACHATE LEVEL SIGNALS, SHARED WITH THE NEW MCS, FROM EXISTING LERF-PLC-20 TO EXISTING EVAP-PLC-10 TO EXISTING 242A MCS.
36. MODIFY EXISTING LEACHATE PUMP STATUS AND CATCH BASIN LEAK DETECTION SIGNALS, RETRANSMITTED FROM THE NEW MCS, FROM EXISTING LERF-PLC-20 TO EXISTING EVAP-PLC-10 TO EXISTING 242A MCS.
37. OPERATING CONTRACTOR TO REPROGRAM EXISTING 242A MCS AS REQUIRED.
38. OPERATING CONTRACTOR TO REPROGRAM ETF MCS AS REQUIRED.
39. FOR NEW MCS LOGIC SEE DRAWINGS H-2-88815, SH 1-6.
40. BLIND FLANGE CAN BE REMOVED AND LEFT OFF FOR INSPECTION OF CONTAINMENT PIPE.
41. REMOVEABLE SPOOL PIECE TO FACILITATE INSTALLATION OF PORTABLE PUMP AND PIPE MANIFOLD.
42. CONTINUOUS LEAK DETECTION CABLE.
43. SEND LERF PLC INPUTS LDA-60M01D, LXA-60M01D, LDA-60M01C, LXA-60M01C, LDA-43-2, & LXA-43-2 SIGNALS TO EVAPORATOR BLDG PLC VIA EXST MODEM.
44. SEND LERF PLC INPUT, LDU-A1, TO EVAPORATOR BLDG VIA EXST MODEM.
THE 4-20 ANALOG SIGNAL SHOULD BE INTERPRETED AS FOLLOWS:
0mA=Loss of Power;
2.0mA=Cable Break;
3.0mA=Cable Loop Impalance/Service Needed;
3.5mA=Service Required Alarm;
5.05mA=System Normal;
~6.45-8.75mA=LDE-A1-06 Leak;
~9.26-11.56mA=LDE-A1-05 Leak;
~11.85-14.15mA=LDE-A1-04 Leak;
~14.74-17.04mA=LDE-A1-03 Leak;
~17.45-19.75mA=LDE-A1-02 Leak;
~20.16-22.46mA=LDE-A1-01 Leak.

BLDG. NO.
2025E
242A
242AL71

INDEX NO.

THIS SPACE RESERVED FOR BUILDING AND INDEX NUMBERS

APR 20 2010
DATE: STA: 30
HANFORD RELEASE
ID: 25

H-2-79601,SH2	P & ID 242-A EVAP BLDG & XCY PIPING		
NUMBER	TITLE		
DRAWING TRACEABILITY LIST			
H-2-88737	SITE PLAN AND DRAWING LIST		
NUMBER	TITLE		
REFERENCES			
NEXT USED ON			

REV NO	DESCRIPTION	REV BY DATE	CHK BY DATE	DFTG APVD DATE	ENGR COMPANY
S RS 14	INCORPORATED ECN-726604-R2 AND ECN-726604-R3	KDJ 4/10			CHPRC

REVISIONS

		DATE
DESIGNED	CM NICKOLAUS	
DSGN ENGR	CM NICKOLAUS	10-1-1993
CHECKED	JA SHIPMAN	9-28-1993
SAFETY	J ARCHIBALD	10-14-1993
ENVIR	JD AXFORD	10-18-1993
QUAL ENGR	TD HAYS	10-14-1993
LEAD ENGR	RT HALLUM	10-12-1993

GR MEZGER 10-14-93
APPROVED FOR IMPLEMENTATION
BY JJ NOBLE
FOR WHC DATE 10-14-93

SAFETY CLASS 3 | EDT

U.S. DEPARTMENT OF ENERGY
RICHLAND FIELD OFFICE
KAISER ENGINEERS HANFORD COMPANY

P & ID
LERF BASIN & ETF INFLUENT EVAPORATOR

PROJECT C-018H 242-A EVAP PUREX PLANT CNDS TRTMT FACIL

SIZE	BLDG NO.	INDEX NO.	DWG NO.	REV NO.
F	SEE ABOVE	7004	H-2-88766	14

SCALE NONE | JOB NO. CR9583 | SHEET 1 OF 5

PLOT SCALE: 1=1 | 18466

KEH 0350.00 (04/92)

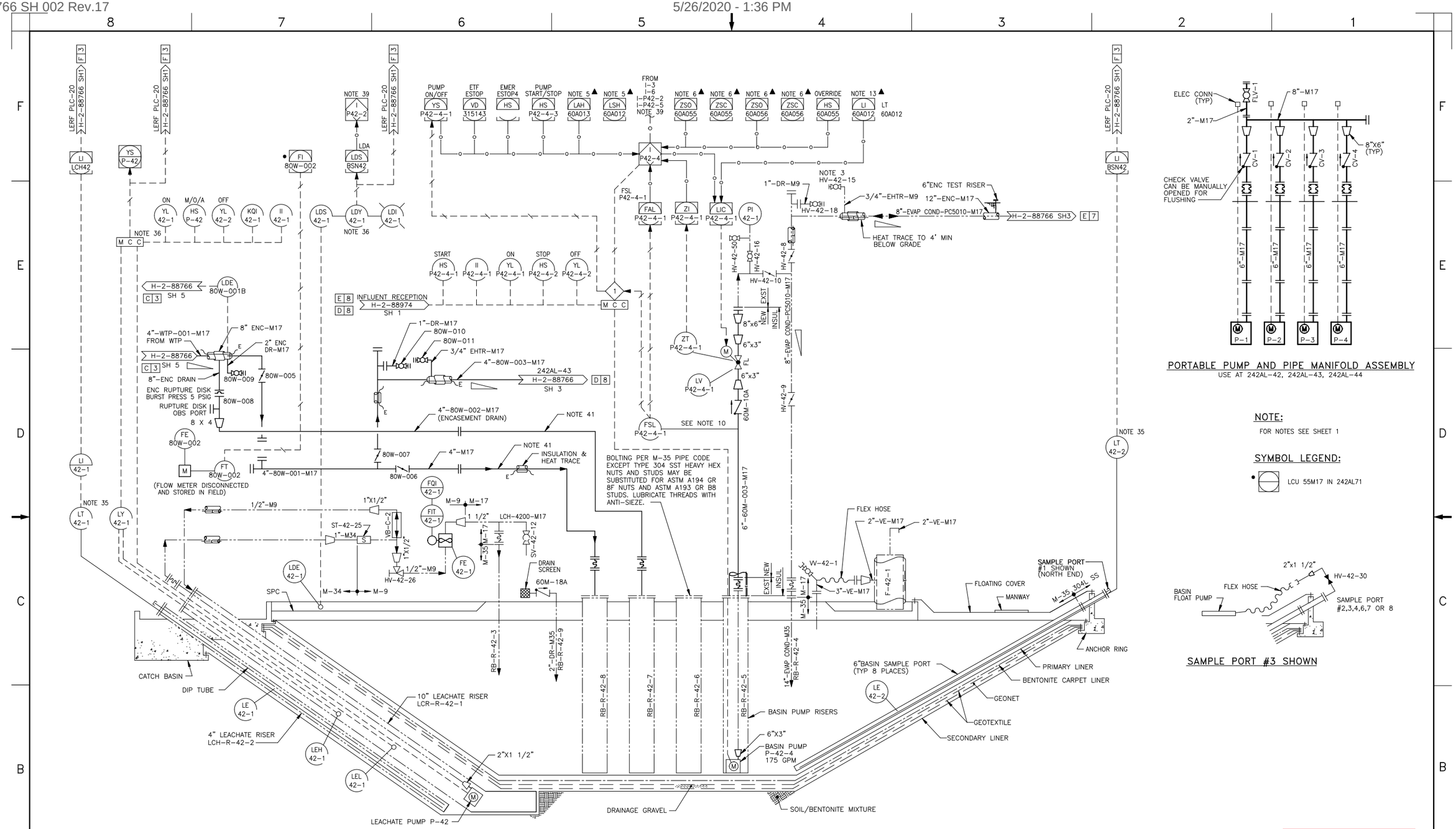

DWG NUMBER	TITLE	REF NUMBER	TITLE
DRAWING TRACEABILITY LIST		NEXT USED ON	REFERENCES

REV NO	DESCRIPTION
17	INC DCN-715849

REVISIONS

BLDG NO 242AL-42

INDEX NO 7004

CAUTION: NOT COMPLETE WITHOUT CURRENT CHANGE DOCUMENTS FROM DATABASE

	NAME	DATE	COMPANY
DRAFTER	A W KRONER	01/24/2005	WRPS
DRAFTING CHECKER	S T FRANKLIN	01/24/2005	WRPS
ENGR. ENG. GROUP LEAD	T M GREEN	01/24/2005	WRPS

U.S. DEPARTMENT OF ENERGY
Office of River Protection

P&ID
LERF BASIN & ETF INFLUENT EVAPORATOR

SIZE	DRAWING NUMBER	SHEET	REV
F	H-2-88766	2	17

SCALE NONE

30271 DOE_TB_F.DWG (SEPTEMBER 2019)

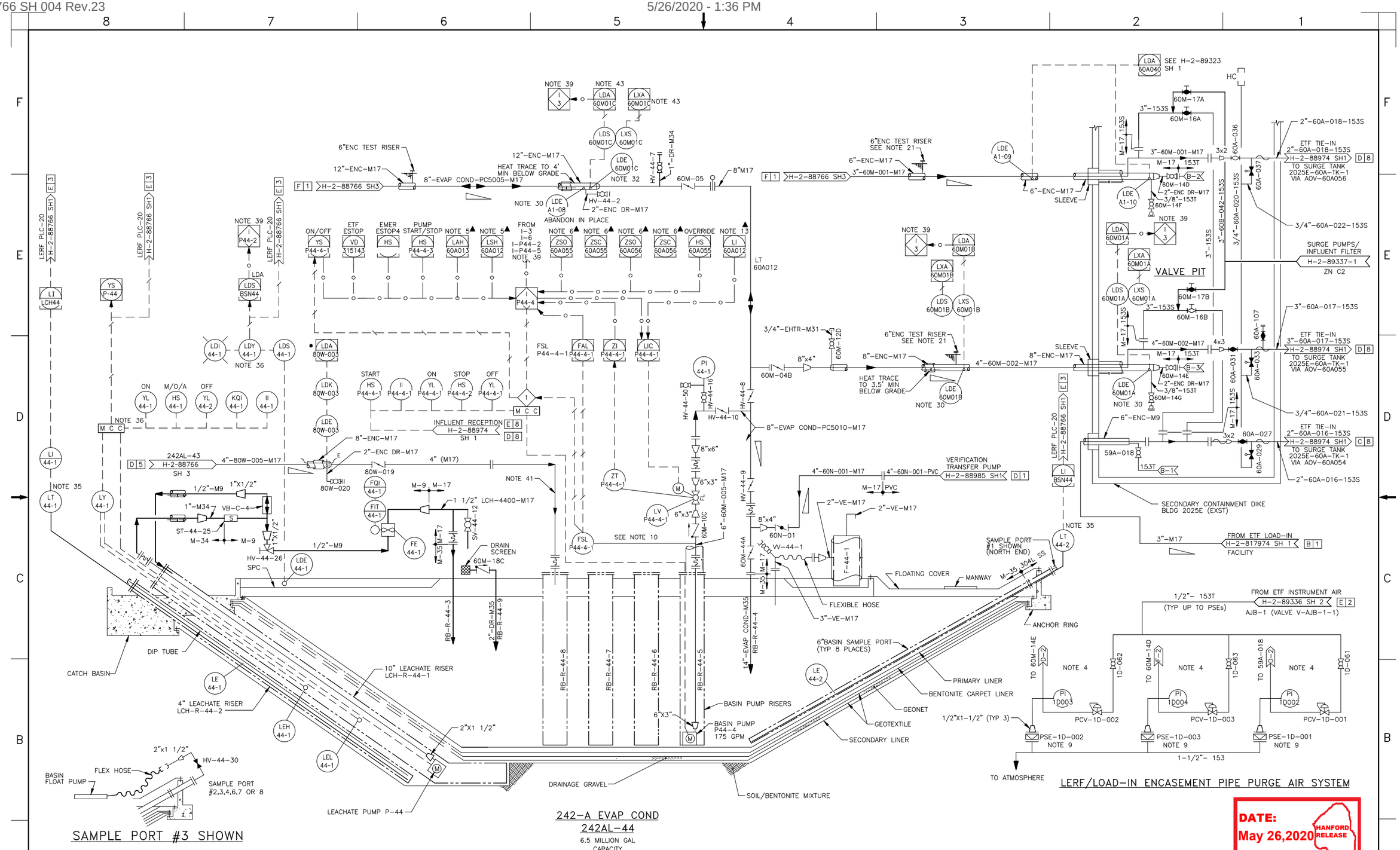

NOTES:

FOR NOTES SEE SHEET 1.

SYMBOL LEGEND:

LCU 55M17 IN 242AL71

DWG NUMBER	TITLE
DRAWING TRACEABILITY LIST	

REF NUMBER	TITLE
REFERENCES	
NEXT USED ON END ITEM	

REV NO	DESCRIPTION
23	INC DCN-715849
REVISIONS	

BLDG NO 242AL-44

INDEX NO 7004

CAUTION: NOT COMPLETE WITHOUT CURRENT CHANGE DOCUMENTS FROM DATABASE

	NAME	DATE	COMPANY
DRAFTER	A W KRONER	01/09/2020	WRPS
DRAFTING CHECKER	S T FRANKLIN	01/09/2020	WRPS
DISC. ENG. GROUP LEAD	T M GREEN	01/09/2020	WRPS

U.S. DEPARTMENT OF ENERGY
Office of River Protection

P&ID
LERF BASIN & ETF INFLUENT EVAPORATOR

SIZE F | DRAWING NUMBER H-2-88766 | SHEET 4 | REV 23

SCALE NONE

30273

DOE_TB_F.DWG (SEPTEMBER 2019)

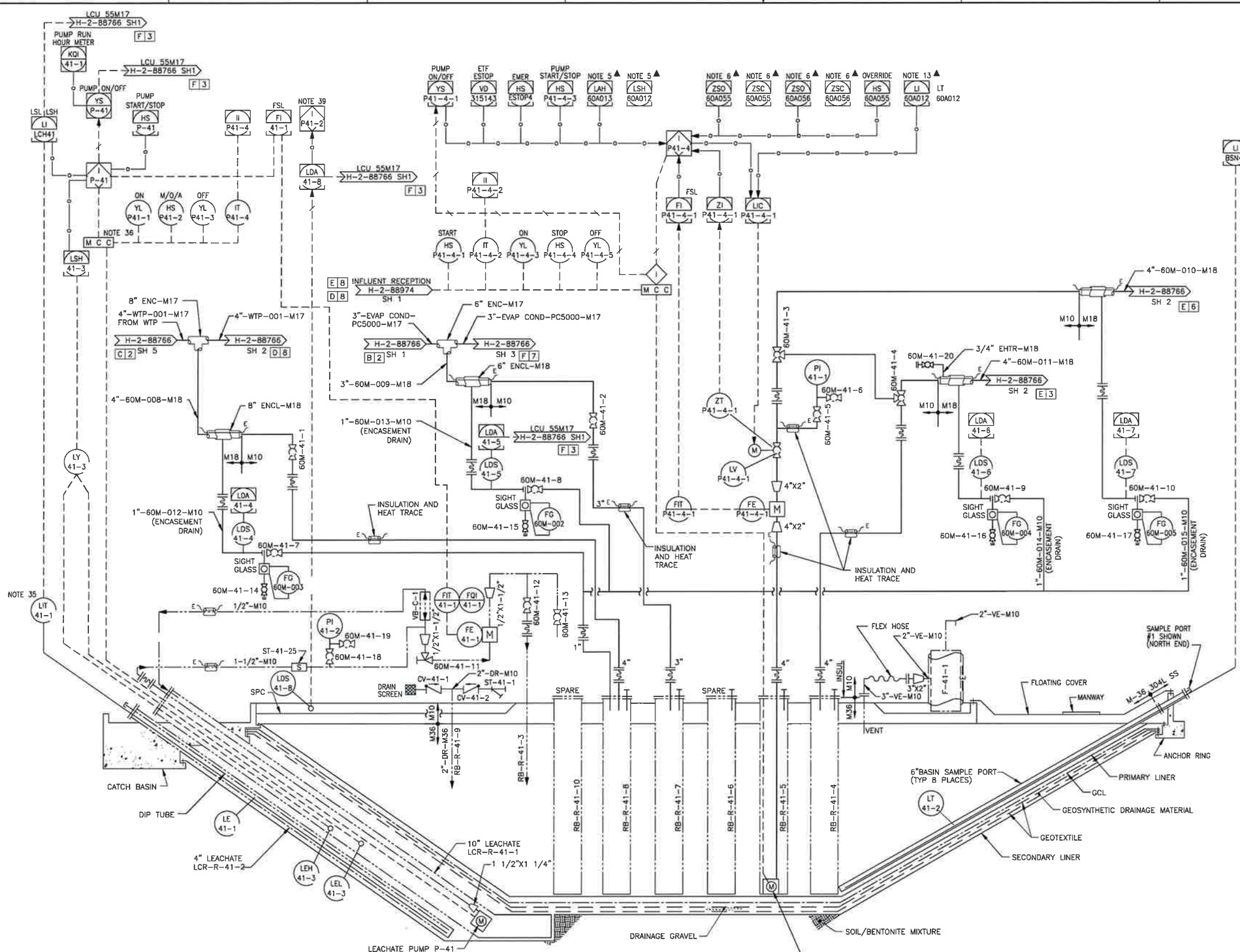

242-A EVAP COND
242AL-41
7.8 MILLION GAL CAPACITY

5/20/20

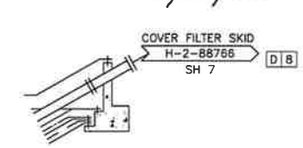

SAMPLE PORT #3

NOTES:

1. FOR DRAWINGS NOTES SEE SHEET 1.

DATE: May 20,2020 HANFORD RELEASE

DWG NUMBER	TITLE	REF NUMBER	TITLE
DRAWING TRACEABILITY LIST		NEXT USED ON	REFERENCES
		H-2-838745	DRAWING LIST/TITLE SHEET

REV	DESCRIPTION
0	RELEASED PER EDT-882459

REVISIONS

BLDG NO 242AL-41

INDEX NO 7004

CAUTION: NOT COMPLETE WITHOUT CURRENT CHANGE DOCUMENTS FROM DATABASE

	NAME	DATE
DRAWN BY	D R CHAPMAN	
DRAWING CHECKER	J R BYERS	
ENGINEERING PEER REVIEWER	C C JOSLYN	
DESIGN CHECKER	B M DORSH	
DESIGN AUTHORITY	N W WILSON	

U.S. DEPARTMENT OF ENERGY
Office of River Protection

P&ID
LERF BASIN & ETF INFLUENT EVAPORATOR

SIZE F | DRAWING NUMBER H-2-88766 | SHEET 6 | REV 00

SCALE NONE

28789

DOE_RL_F.DWG (SEPTEMBER 2018)

DOCUMENT RELEASE AND CHANGE FORM

Prepared For the U.S. Department of Energy, Assistant Secretary for Environmental Management
By Washington River Protection Solutions, LLC., PO Box 850, Richland, WA 99352
Contractor For U.S. Department of Energy, Office of River Protection, under Contract DE-AC27-08RV14800

TRADEMARK DISCLAIMER: Reference herein to any specific commercial product, process, or service by trade name, trademark, manufacturer, or otherwise, does not necessarily constitute or imply its endorsement, recommendation, or favoring by the United States government or any agency thereof or its contractors or subcontractors. Printed in the United States of America.

Release Stamp

DATE:
May 26,2020
HANFORD RELEASE

1. **Doc No:** RPP-RPT-62003 **Rev.** 00

2. **Title:**
Control System Strategy for Liquid Effluent Retention Facility Basin 41

3. **Project Number:** ☐N/A
T1P226

4. **Design Verification Required:**
☐Yes ☒No

5. **USQ Number:** ☒ N/A
RPP-27195

6. **PrHA Number** **Rev.** ☒ N/A

Clearance Review Restriction Type:
public

7. **Approvals**

Title	Name	Signature	Date
Checker	Garcia, Michael F	*Garcia, Michael F*	05/04/2020
Clearance Review	Ayers, Lynn M	*Ayers, Lynn M*	05/26/2020
Design Authority	Wilson, Nathaniel W	*Wilson, Nathaniel W*	05/04/2020
Document Control Approval	Meinecke, Kathryn R	*Meinecke, Kathryn R*	05/26/2020
Environmental Protection	Wall, Jeremy M	*Wall, Jeremy M*	05/12/2020
Originator	Veach, Kc J	*Veach, Kc J*	04/30/2020
Other Approver	Joslyn, Cameron C	*Joslyn, Cameron C*	05/19/2020
Other Approver	Samoska, Jerry A	*Samoska, Jerry A*	05/19/2020
Responsible Manager	Huntington, Matthew R	*Huntington, Matthew R*	05/19/2020

8. **Description of Change and Justification**

Incorporating new Basin 41 into Liquid effluent retention Facility Control System.

9. **TBDs or Holds** ☒N/A

10. **Related Structures, Systems, and Components**

a. **Related Building/Facilities** ☐N/A	b. **Related Systems** ☐N/A	c. **Related Equipment ID Nos. (EIN)** ☒N/A
ETF FACILITIES LERF FACILITIES	ETF LERF	

11. **Impacted Documents – Engineering** ☒N/A

Document Number	Rev.	Title

12. **Impacted Documents (Outside SPF):**

N/A

13. **Related Documents** ☐N/A

Document Number	Rev.	Title
MT-50497	00	Liquid Effluent Retention Facility (LERF) Basin 41

14. **Distribution**

Name	Organization
Angevine, Brennan T	MISSION ANALYSIS ENGINEERING
Blaak, Whitney S	COGNIZANT SYSTEM ENGINEERING
Demiter, Scott M	ETF OPERATIONS
Foster, Jim	242-A/AW/ETF OPERATIONS
Goessmann, Glen E	ENGINEERING PROGRAMS
Greenhalgh, Aaron M	TANK FARM PROJECTS ENGINEERING
Halgren, Dale L	ETF ENGINEERING
Harris, John W	SAFETY PROGRAM SERVICES RC/P
Joslyn, Cameron C	ETF ENGINEERING
McFerran, Brandon E	242-A/AW/ETF OPERATIONS
McShane, Michael P	ENGINEERING PROGRAMS
Nelson, Richard L	
Omberg Carro, Susan K	NUCLEAR SAFETY
O'Meara, Sean P	ETF ENGINEERING
Ozbas, Murat	PROC SYS & ENGINEERING SUPPORT
Powers, Daniel J	ETF ENGINEERING
Roosendaal, Gene D	TFP PROJECT MANAGEMENT
Rutherford, Wally	ETF ENGINEERING
Sackett, Tom E	TANK FARM PROJECTS
Samoska, Jerry A	INSTRUMENT & CNTRL ENGINEERING

DOCUMENT RELEASE AND CHANGE FORM	**Doc No:** RPP-RPT-62003 **Rev.** 00

14. **Distribution**

Name	**Organization**
Shultz, Milton V	NUCLEAR SAFETY
Smith, Gregory E	TANK FARM PROJECTS ENGINEERING
Smoot, Bill R	TFP RADCON
Swanson, Brad L	242-A/AW/ETF OPERATIONS
Wall, Jeremy M	RETRVL & CLOSURE/PROJ ENV CMPL
Wilson, Nathaniel W	ETF PROJECTS ENGINEERING

RPP-RPT-62003
Revision 0

Control System Strategy for Liquid Effluent Retention Facility Basin 41

Prepared by

K. J. Veach
Sargent & Lundy for Washington River Protection Solutions, LLC

Date Published
April 2020

washington river protection solutions

MICHAEL FREDERICK GARCIA II
STATE OF WASHINGTON
33963
REGISTERED
PROFESSIONAL ENGINEER
5/27/20

Prepared for the U.S. Department of Energy
Office of River Protection

Project No. T1P226

Approved for Public Release;
Further Dissemination Unlimited

CONTROL SYSTEM STRATEGY FOR LIQUID EFFLUENT RETENTION FACILITY BASIN 41

April 2020

prepared by

Sargent & Lundy
1100 Jadwin Avenue, Suite 400
Richland, Washington 99352
(509) 946-3300

prepared for

Washington River Protection Solutions, LLC

TABLE OF CONTENTS

1.0 INTRODUCTION 1
- 1.1 Background and Purpose 1
- 1.2 Project Scope 1

2.0 OVERALL DESCRIPTION 2
- 2.1 Receive Effluent 2
  - 2.1.1 Waste Treatment and Immobilization Plant 2
  - 2.1.2 242-A Evaporator 2
  - 2.1.3 Liquid Effluent Retention Facility Basins 2
  - 2.1.4 Tanker Truck/Purge Water 3
- 2.2 Transfer Effluent 3
  - 2.2.1 Effluent Treatment Facility 3
  - 2.2.2 Liquid Effluent Retention Facility Basins 3
- 2.3 Recirculation 3
  - 2.3.1 Recirculation 3

3.0 PROCESS CONTROL NARRATIVE 4
- 3.1 Basin Pump P-41-4 4
  - 3.1.1 Local Control 4
  - 3.1.2 Remote Mode 4
  - 3.1.3 Level Indicating Controller LIC-P41-4-1 (Auto Mode) 4
  - 3.1.4 Stop Pump Interlock I-P41-4 4
- 3.2 Leachate Pump P-41 5
  - 3.2.1 Local Control 5
  - 3.2.2 Auto Mode 5
  - 3.2.3 Remote Mode 5
- 3.3 Basin 41 Monitoring 6
  - 3.3.1 Main Basin Level 6
  - 3.3.2 Catch Basin Level Detector 6
  - 3.3.3 Leak Detection 6

4.0 SOFTWARE AND INTEGRATION 6
- 4.1 Interface to Other Systems 6
- 4.2 Programming and Software Development 6

5.0 REFERENCES 7

LIST OF APPENDICES

Appendix A – Input/Output List

Appendix B – Catch Basins 242AL-41, 242AL-42, 242AL-43, and 242AL-44 Piping and Equipment Layout Diagram

LIST OF TERMS

Abbreviations, Initialisms, and Acronyms

ABB	Asea Brown Boveri
ECN	Engineering Change Notice
EMF	Effluent Management Facility
ETF	Effluent Treatment Facility
I&C	Instrumentation and Control
I/O	Input/Output
LERF	Liquid Effluent Retention Facility
MCS	Monitor Control System
P&ID	Piping and Instrumentation Drawing
WTP	Waste Treatment and Immobilization Plant
RTRP	Reinforced Thermosetting Resin Pipe

Units

%	Percent
in.	inch
gpm	gallon per minute

1.0 INTRODUCTION

1.1 BACKGROUND AND PURPOSE

The Liquid Effluent Retention Facility (LERF) stores wastewater from several Hanford sources for eventual processing through the Effluent Treatment Facility (ETF). The original excavation of the LERF included four basins: 242AL-41 (Basin 41); 242AL-42 (Basin 42); 242AL-43 (Basin 43); and 242AL-44 (Basin 44). However, only Basins 42, 43, and 44 were designed and completed. Therefore, there are currently only three operating LERF basins. The operating basins are located just north of the 200 East Area tank farms and adjacent to the ETF. The basins store waste water from several Hanford Site sources, including condensate from the 242-A Evaporator, dilute waste streams from solid waste disposal facilities, and site cleanup activities.

Once the Waste Treatment and Immobilization Plant (WTP) begins processing waste, it will send wastewater from the WTP Effluent Management Facility (EMF) to the LERF. Due to the additional future planned wastewater sources, a fourth basin is needed to ensure sufficient storage capacity. Basin 41 is allocated for development and use for the additional wastewater capacity requirement.

This report provides the overall description for LERF Basin 41 and its integration with existing LERF Basins 42, 43, and 44. An Input/Output (I/O) list is included in Appendix A and a Catch Basin Equipment Layout Diagram is included in Appendix B. For a list of all project documents and drawings, see Drawing H-2-838745, *LERF Basin 41 Drawing List/Title sheet.*

1.2 PROJECT SCOPE

The scope of this project includes installation of field instrumentation and control (I&C) equipment and termination of field wiring at LCU55M17 (LCU-17). LCU-17 is located in instrumentation building 242AL71. The design scope does not include modification of LCU-17 hardware, or software development. The design to upgrade LCU-17 to an Asea Brown Boveri (ABB) 800xA platform is currently in scope for the ETF Monitor and Control System (MCS) upgrade project. These upgrades will include adequate spare capacity for future LERF Basin 41 inputs and outputs. See engineering change notice (ECN) ECN-715497, *ABB MCS Upgrade, LCU55M17 Modification*, and Drawing set H-2-838830, *ETF MCS ABB Upgrade Instrumentation LCU55M17 Wiring*, for details.

2.0 OVERALL DESCRIPTION

Project T1P226, "ETF Basin 41 Installation," includes the scope associated with the LERF Basin 41 activities. The LERF Basin 41 activities consist of design for the installation of a basin liner, cover, piping, and equipment including:

- a LERF basin;
- a catch basin;
- a basin pump;
- a leachate pump;
- piping between basins and the ETF;
- electrical modifications;
- lighting; and
- instrumentation and controls.

The key content of this document includes an overall description of LERF Basin 41 from an I&C field instrumentation perspective. For Basins 41, 42, 43, and 44 Piping and Instrumentation Diagram (P&ID), see Drawing H-2-88766, *P&ID LERF Basin & ETF Influent Evaporator*. For I/O List, see Appendix A. For Equipment Layout Diagram, see Appendix B.

2.1 RECEIVE EFFLUENT

Effluent is received into Basin 41 from multiple sources, but only from one source at a time. The source of the effluent is determined by the lineup of catch basin manual valves located at the northwest corner of each LERF basin.

2.1.1 Waste Treatment and Immobilization Plant

Basin 41 will be configured to receive effluent from WTP. The effluent from WTP is received through Riser RB-R-41-8. The scope of the ETF MCS upgrade project includes design and implementation for a new communications interface between the LCU-17 and the WTP MCS.

2.1.2 242-A Evaporator

Basin 41 will be configured to receive effluent from the 242-A Evaporator. The effluent from the 242-A Evaporator is received through Riser RB-R-41-7. The scope of the ETF MCS upgrade project includes design and implementation for a new interface between the LCU-17 and the 242-A Evaporator.

2.1.3 Liquid Effluent Retention Facility Basins

Basin 41 will be configured to receive effluent from Basins 42, 43, or 44. Received effluent is through Riser RB-R-41-4.

2.1.4 Tanker Truck/Purge Water

The LERF has the capability to receive tanker truck leachate shipments at the ETF Surge Tank sump piping area that can then be transferred to any of the basins. Basin 41 effluent is received through Riser RB-R-41-4 or Riser RB-R-41-8. When receiving effluent from ETF, valves AOV-60A056 and AOV-60A055 must be open, see Drawing H-2-88974, *Piping and Inst Diag Influent Reception System*. Following an ETF campaign, the processing equipment is purged and flushed to ensure proper cleanliness and to mitigate cross-contamination between waste streams. The flush water (verification water) is discharged back to LERF.

2.2 TRANSFER EFFLUENT

All effluent being transferred out of Basin 41 is accomplished via Pump P-41-4 through Riser RB-R-41-5. The route and final destination of the effluent is determined by the manual arrangement of catch basin valves located on the northwest corner of each LERF Basin. Valve LV-P41-4-1 is adjusted to control flow and does not determine the path of the effluent. When the logic status is in auto mode, the valve is modulated to control level. (**Note**: the existing level valves in Basins 42, 43, and 44 are positioned manually at the catch basins and auto mode, although available, are not used.)

2.2.1 Effluent Treatment Facility

The primary purpose of the LERF system is to store effluent that will eventually be transferred and processed by the ETF.

2.2.2 Liquid Effluent Retention Facility Basins

Basin 41 system can be configured to transfer effluent to Basin 42, Basin 43, or Basin 44.

2.3 RECIRCULATION

2.3.1 Recirculation

Basin Pump P-41-4 can be configured to recirculate Basin 41 contents by pumping effluent out of Riser RB-R-41-5 and routing the effluent back down riser RB-R-41-4. During recirculation, Valve LV-P41-4-1 must be kept between 31% and 61% open to prevent pump cavitation and pump run-out.

3.0 PROCESS CONTROL NARRATIVE

3.1 BASIN PUMP P-41-4

3.1.1 Local Control

When the ABB Control System Permissive/stop Contact 55M17-D-12 is closed, Basin Pump P-41-4 can be operated locally from Motor Starter DS-P41-4 (see Drawing H-2-79668, *Electrical Elementary Diagram Basin 41 Pumps*). The motor control panel provides indication of Pump Status ON (YL-P41-4-3), or Pump Status OFF (YL-P41-4-5).

3.1.2 Remote Mode

Basin Pump P-41-4 can be monitored and controlled remotely from the ETF MCS. With the ABB Control System permissive/stop contact 55M17-D-12 closed, the pump can be started from hand switch HS-P-41-3 (ABB Control System output 55M17-D-13). The pump is shut down remotely by opening the ABB Control System permissive/stop contact 55M17-D-12. YS-P41-4-1, provides indication of pump status.

3.1.3 Level Indicating Controller LIC-P41-4-1 (Auto Mode)

When transferring to the ETF Surge Tank Basin, Pump P-41-4 can be controlled automatically through Loop P41-4-1 and Loop 60A012 (see Drawings H-2-89337, *Piping and Inst Diagram Surge Tank System,* and H-2-88974). Level Transmitter LT-60A012 measures the surge tank level. The level information is used by Level Indication Controller LIC-P41-4-1 to adjust valve position (see Drawing H-2-88766, Sheet 6). Valve position is monitored by ZT-P41-4-1. As the level of the surge tank rises, the valve is slowly closed by Electric Actuator LV-P41-4-1. Process flow is monitored by FIT-P41-4-1 and pump current is monitored by II-P41-4-2.

3.1.4 Stop Pump Interlock I-P41-4

The following logic conditions will result in a Pump P-41-4 shut down.

- Any Catch Basin Leak Detector that detects a leak or high-level condition (LDS-41-8, LDE-42-1, LDE-43-1, LDE-44-1).
- The LERF Condensate Line leak detector detects a leak or high-level condition (LDS-60M01A, LDS-60M01B, LDS-60M01C, LDS-60M01D).
- Leak Detector LDS-42-3 detects a leak or high-level condition when transferring effluent to Basin 42.

- Surge tank level alarm High is energized (LAH-60A013, LAHL-60A012). The high-level condition results in a pump shut down and an alarm.
- Flow to the surge tank is less than 55 gpm (FI-P41-4-1) for longer than 40 seconds.
- Emergency Stops are activated by HS-ESTOP4 or ETF ESTOP VD-315143.
- Remote stop from the ETF MCS.

The ETF MCS upgrade project software requirement specification is replacing logic diagrams and will include the logic for Basin 41. For existing Basin Programmable Logic Controller logic, see Drawing H-2-88815, *Instrumentation Sequential Logic Diagram LERF Basin*, for details.

3.2 LEACHATE PUMP P-41

3.2.1 Local Control

Leachate Pump P-41 can be controlled locally from Motor Starter DS-P-41 (see Drawing H-2-79668). Manual, Off, or Auto mode is selected using local Hand Switch HS-P41-2. If switched to the manual position, Pump P-41 will start. Pump P-41 is shut down by moving Hand Switch HS-P41-2 into the OFF position. The motor control panel provides indication of Pump Status ON (YL-P41-1) or Pump Status OFF (YL-P41-3).

3.2.2 Auto Mode

The pump can be run two ways in auto mode. Hand switch HS-P41-2 needs to be in the auto position for either auto mode to work. The first option is Pump P-41 is controlled by the ETF MCS. The pump will turn on when LIT-41-1 detects a high-level condition of approximately 9 in. and turn off when a leachate low-level condition of approximately 6 in. is detected. With option two, the pump can be set to turn on when LSH-41-3 detects a high-level condition of approximately 9 in. and will turn off when the water level has been pumped down to approximately 6 in. Pump current is monitored by II-P-41-4.

3.2.3 Remote Mode

Leachate Pump P-41 can be controlled remotely through the ETF MCS. Hand Switch HS-P-41 starts and stops the pump. YS-P-41 provides indication of pump status.

3.3 BASIN 41 MONITORING

3.3.1 Main Basin Level

The Main Basin Level LI-BSN41 is displayed at the ETF MCS.

3.3.2 Catch Basin Level Detector

If Level Detector Switch LDS 41-8 detects a high-level condition, it will result in an alarm in the ETF MCS (LDA-41-8).

3.3.3 Leak Detection

Outside the catch basin, the primary and secondary pipes are Reinforced Thermosetting Resin Pipe (RTRP) (see RPP-SPEC-63632, *LERF Basin 41 Construction Specification*). The secondary RTRP has leak detectors LDS-41-4, LDS-41-5, LDS-41-6, and LDS-41-7. Leak Detector LD-42-3 was added to the Basin 42 catch basin to detect leaks during basin to basin transfers. Upon effluent detection, each leak detector will cause an alarm in the ETF MCS.

4.0 SOFTWARE AND INTEGRATION

4.1 INTERFACE TO OTHER SYSTEMS

Instrumentation and controls will be terminated at LCU-17, including field wiring. Integration into the ETF MCS will be implemented by the ETF MCS upgrade project. LDA-41-5, LDA-41-8, LI-LCH41, LI-BSN41 and YS-P-41 shall be shared with the 242-A control room. This allows the evaporator to detect leaks at Basin 41 during transfers (see the basin/leachate level) and know when the leachate pump is running. See ECN-715586, title, and Drawing H-2-88766, sheet 1, for details.

4.2 PROGRAMMING AND SOFTWARE DEVELOPMENT

Programing and software development is out of the scope of this project. It will be completed by the ETF MCS upgrade project.

5.0 REFERENCES

ECN-715497, 2020, *ABB MCS Upgrade, LCU55M17 Modification,* Revision 0, Washington River Protection Solution, LLC, Richland, Washington.

ECN-715586, 2020, *LERF Basin 41 - I&C Installation,* Revision 0, Washington River Protection Solution, LLC, Richland, Washington.

H-2-79668, Sheet 6, 2020, *Electrical Elementary Diagram Basin 41 Pumps*, Revision 0, Washington River Protection Solution, LLC, Richland, Washington.

H-2-838745, Sheet 1, 2020, *LERF Basin 41 Drawing List/Title Sheet,* Revision 0, Washington River Protection Solution, LLC, Richland, Washington.

H-2-838830, 2020, *ETF MCS ABB Upgrade Instrumentation LCU55M17 Wiring,* Revision 0, Washington River Protection Solution, LLC, Richland, Washington.

H-2-88766, Sheet 2, 2018, *P&ID LERF Basin & ETF Influent Evaporator*, Revision 16, Washington River Protection Solution, LLC, Richland, Washington.

H-2-88766, Sheet 3, 2018, *P&ID LERF Basin & ETF Influent Evaporator*, Revision 20, Washington River Protection Solution, LLC, Richland, Washington.

H-2-88766, Sheet 4, 2018, *P&ID LERF Basin & ETF Influent Evaporator*, Revision 22, Washington River Protection Solution, LLC, Richland, Washington.

H-2-88766, Sheet 6, 2020, *P&ID LERF Basin & ETF Influent Evaporator*, Revision 0, Washington River Protection Solution, LLC, Richland, Washington.

H-2-88815, 2008, *Instrumentation Sequential Logic Diagram LERF Basin*, Revision 7, Washington River Protection Solution, LLC, Richland, Washington.

H-2-88974, Sheet 1, 2018, *Piping & Inst Diag Influent Reception System*, Revision 19, Washington River Protection Solution, LLC, Richland, Washington.

H-2-89337, Sheet 1, 2019, *Piping and Inst Diagram Surge Tank System*, Revision 1, Washington River Protection Solution, LLC, Richland, Washington.

RPP-SPEC-63632, 2020, *LERF Basin 41 Construction Specification,* Revision 0, Washington River Protection Solution, LLC, Richland, Washington.

APPENDIX A

INPUT/OUTPUT LIST

LERF Basin 41 I/O list- 100%

Instrument Designator	Loop Numb	Inst Type	SERVICE	Description	Software tag only	I/O Conn.	Signal Type	Process Range min/max	Manufacturer	Model	Range	Calibrated @	HI HI ALM	HI ALM	LO ALM	LO LO ALM	LCU	Cluster	Slot	Channel	Data Sheet#	P&ID Dw	Loop / Elementary Dwg #	Detail Dwg	Notes
LDS-41-4	41-4	LDS	Water	Encasement Leak Detection		DI	24 VDC	N/A	FCI	see data sheet	N/A	N/A	N/A	5/16 inch	N/A	N/A	17	C2	7	12	LD-101	H-2-88766 SH 6	H-2-88818-001	H-2-88813-004	
LDS-41-5	41-5	LDS	Water	Encasement Leak Detection		DI	24 VDC	N/A	FCI	see data sheet	N/A	N/A	N/A	5/16 inch	N/A	N/A	17	C2	7	13	LD-101	H-2-88766 SH 6	H-2-88818-001	H-2-88813-004	
LDS-41-6	41-6	LDS	Water	Encasement Leak Detection		DI	24 VDC	N/A	FCI	see data sheet	N/A	N/A	N/A	5/16 inch	N/A	N/A	17	C2	7	14	LD-101	H-2-88766 SH 6	H-2-88818-001	H-2-88813-004	
LDS-41-7	41-7	LDS	Water	Encasement Leak Detection		DI	24 VDC	N/A	FCI	see data sheet	N/A	N/A	N/A	5/16 inch	N/A	N/A	17	C2	7	15	LD-101	H-2-88766 SH 6	H-2-88818-001	H-2-88813-004	
LDS-41-8	41-8	LDS	Water	Catch Basin Leak Detection		DI	24 VDC	N/A	FCI	see data sheet	N/A	N/A	N/A	9 inch	N/A	N/A	17	C2	7	16	LD-101	H-2-88766 SH 6	H-2-88818-001	H-2-88813-004	
LDS-42-3	42-3	LDS	Water	Encasement Leak Detection		DI	24 VDC	N/A	FCI	see data sheet	N/A	N/A	N/A	5/16 inch	N/A	N/A	17	C2	7	11	LD-101	H-2-88766 SH 2	H-2-88818-001	H-2-88813-004	
LY-41-3	41-3	LSH	Water	Leachate Switch High Level Point Detection		DI	24 VDC	N/A	B/W controls	see data sheet	N/A	N/A	N/A	10.5 inch	2 inch	N/A	17	C2	7	10	L-103	H-2-88766 SH 6	H-2-88818-001	H-2-88813-004	
YS-P41-4-1	P41-4-1	YS	Water	Basin Pump P-41-4 On/Off Status		DI	24 VDC	N/A	N/A	N/A	N/A	N/A	N/A	N/A	N/A	N/A	17	C2	7	8	N/A	H-2-88766 SH 6	H-2-88818-001	N/A	
YS-P-41	P-41	YS	Water	Leachate Pump P-41 On/Off status		DI	24 VDC	N/A	N/A	N/A	N/A	N/A	N/A	N/A	N/A	N/A	17	C2	7	9	N/A	H-2-88766 SH 6	H-2-88818-001	N/A	
HS-P41-4-3	P41-4-3	HS	Water	Basin Pump P-41-4 start Command		DO	120 VAC	N/A	N/A	N/A	N/A	N/A	N/A	N/A	N/A	N/A	17	C3	6	3	N/A	H-2-88766 SH 6	H-2-79668-006	N/A	
HS-P41-4-3	P41-4-3	HS	Water	Basin Pump P-41-4 Stop Command		DO	120 VAC	N/A	N/A	N/A	N/A	N/A	N/A	N/A	N/A	N/A	17	C3	6	2	N/A	H-2-88766 SH 6	H-2-79668-006	N/A	
HS-P-41	P-41	HS	Water	Leachate Pump P-41 Start/Stop Command		DO	120 VAC	N/A	N/A	N/A	N/A	N/A	N/A	N/A	N/A	N/A	17	C3	6	4	N/A	H-2-88766 SH 6	H-2-79668-006	N/A	
LIT-41-1	41-1	LIT	Water	Leachate Level Transmitter		AI	4-20 mA	0-27 inch	Viatran	see data sheet	0-27 inch	0-13 inch	N/A	N/A	N/A	N/A	17	C2	3	2	L-102	H-2-88766 SH 6	H-2-88813-001	H-2-88813-001	
FIT-41-1	41-1	FIT	Water	Leachate Pump P-41 supply Flow Transmitter		AI	4-20 mA	3.7-10.0 gpm	Rosemount	see data sheet	0.038-37 gpm	NA	N/A	N/A	N/A	N/A	17	C2	3	4	F-101	H-2-88766 SH 6	H-2-88813-001	H-2-88813-001	
IT-P41-4-2	P41-4-2	IT	Water	Pump P-41-4 Current Transmitter		AI	4-20 mA	0-20 amp	CR Magnetics	see data sheet	0-20 Amp	N/A	N/A	N/A	N/A	N/A	17	C2	3	8	N/A	H-2-88766 SH 6	H-2-88813-001	H-2-88813-001	
IT-P41-4	Pt1-4	IT	Water	Pump P-41 Current Transmitter		AI	4-20 mA	0-20 amp	CR Magnetics	see data sheet	0-20 Amp	N/A	N/A	N/A	N/A	N/A	17	C2	3	7	N/A	H-2-88766 SH 6	H-2-88813-001	H-2-88813-001	
LT-P41-4-1	P41-4-1	LIT	Water	Basin 41 Level Transmitter		AI	4-20 mA	0-27 ft	DrexelBrook	see data sheet	0-27 ft	0-27 ft	N/A	N/A	N/A	N/A	17	C2	3	3	L-102	H-2-88766 SH 6	H-2-88813-001	H-2-88813-001	
ZT-P41-4-1	P41-4-1	ZT	Water	Valve LV-P41-4-1 Position Transmitter		AI	4-20 mA	0-90 °	Bray	see data sheet	0-90 °	0-90 °	N/A	N/A	N/A	N/A	17	C2	3	6	LV-101	H-2-88766 SH 6	H-2-88813-001	H-2-88813-001	
FIT-P41-4-1	P41-4-1	FIT	Water	Basin Pump P-41-4 supply Flow Transmitter		AI	4-20 mA	75-150 gpm	Rosemount	see data sheet	0.418-408 gpm	0-180 gpm	N/A	N/A	N/A	N/A	17	C2	3	5	F-102	H-2-88766 SH 6	H-2-88813-001	H-2-88813-001	
LV-P41-4-1	P41-4-1	LV	Water	Level Valve Command		AO	4-20 mA	0-90 °	Bray	see data sheet	0-90 °	0-90 °	N/A	N/A	N/A	N/A	17	C2	5	4	LV-101	H-2-88766 SH 6	H-2-88813-001	H-2-88813-001	

APPENDIX B

CATCH BASINS 242AL-41, 242AL-42, 242AL-43, AND 242AL-44 PIPING AND EQUIPMENT LAYOUT DIAGRAM

Appendix B, Catch Basins 242AL-41, 242AL-42, 242AL-43, and 242AL-44 Piping and Equipment Layout Diagram

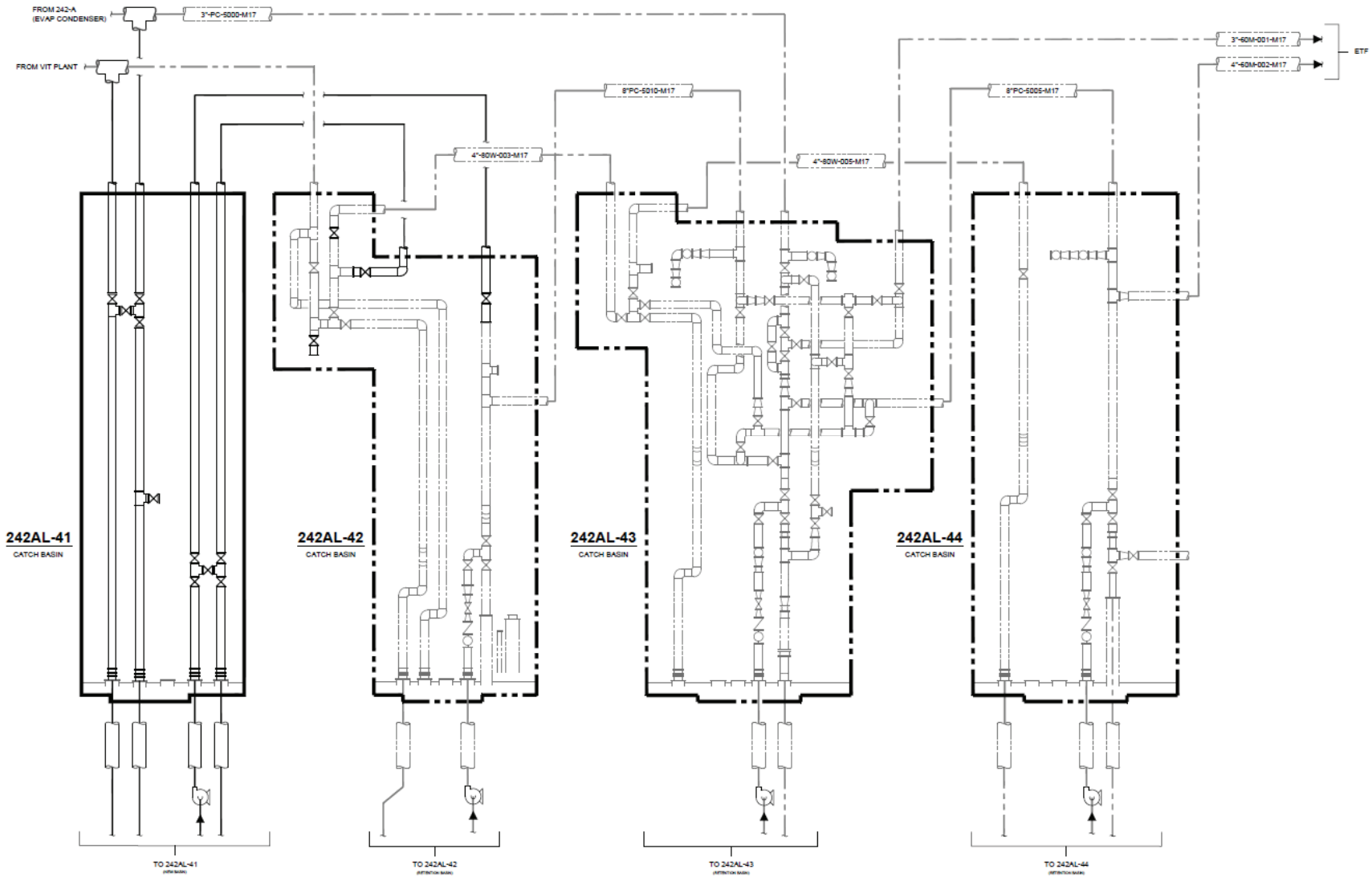

DOCUMENT RELEASE AND CHANGE FORM

Prepared For the U.S. Department of Energy, Assistant Secretary for Environmental Management
By Washington River Protection Solutions, LLC., PO Box 850, Richland, WA 99352
Contractor For U.S. Department of Energy, Office of River Protection, under Contract DE-AC27-08RV14800

TRADEMARK DISCLAIMER: Reference herein to any specific commercial product, process, or service by trade name, trademark, manufacturer, or otherwise, does not necessarily constitute or imply its endorsement, recommendation, or favoring by the United States government or any agency thereof or its contractors or subcontractors. Printed in the United States of America.

Release Stamp

DATE: May 26,2020

HANFORD RELEASE

1. **Doc No:** RPP-RPT-62215 **Rev.** 00

2. **Title:**
LERF Basin 41 Material Compatibility with Wastewater

3. **Project Number:** T1P226 ☐N/A

4. **Design Verification Required:** ☐Yes ☒No

5. **USQ Number:** ☒ N/A RPP-27195

6. **PrHA Number** **Rev.** ☒ N/A

Clearance Review Restriction Type: public

7. **Approvals**

Title	Name	Signature	Date
Checker	Anda, Vanessa S	*Anda, Vanessa S*	05/13/2020
Clearance Review	Aardal, Janis D	*Aardal, Janis D*	05/26/2020
Design Authority	Wilson, Nathaniel W	*Wilson, Nathaniel W*	05/14/2020
Document Control Approval	Meinecke, Kathryn R	*Meinecke, Kathryn R*	05/26/2020
Environmental Protection	Wall, Jeremy M	*Wall, Jeremy M*	05/18/2020
Originator	Dahl, Megan M	*Dahl, Megan M*	05/13/2020
Other Approver	Joslyn, Cameron C	*Joslyn, Cameron C*	05/13/2020
Other Approver	Greenhalgh, Aaron M	*Greenhalgh, Aaron M*	05/14/2020
Other Approver	Rice, Joseph P	*Rice, Joseph P*	05/18/2020
Other Approver	Roosendaal, Gene D	*Roosendaal, Gene D*	05/14/2020
Responsible Manager	Huntington, Matthew R	*Huntington, Matthew R*	05/19/2020

8. **Description of Change and Justification**

Once the Waste Treatment and Immobilization Plant (WTP) begins processing waste, it will send wastewater from the Effluent Management Facility (EMF) to the LERF, prompting the need for a fourth basin, 242AL-41, (Basin 41). This material compatibility assessment is necessary to demonstrate that the basin will be able to perform its function of retaining the wastewater.

Note, Section 5.0, Page A-7: MicroShield is a registered trademark of Grove Engineering, Inc., Lynchburg, Virginia.

9. **TBDs or Holds** ☒N/A

10. **Related Structures, Systems, and Components**

a. **Related Building/Facilities** ☐N/A	b. **Related Systems** ☐N/A	c. **Related Equipment ID Nos. (EIN)** ☒N/A
ETF FACILITIES LERF FACILITIES	ETF LERF	

11. **Impacted Documents – Engineering** ☒N/A

Document Number	Rev.	Title

12. **Impacted Documents (Outside SPF):**

N/A

13. **Related Documents** ☐N/A

Document Number	Rev.	Title
HNF-3172	09	Liquid Waste Processing Facilities Waste Acceptance Criteria
WHC-SD-W105-TD-001	00	9090 TEST RESULTS

14. **Distribution**

Name	Organization
Blaak, Whitney S	COGNIZANT SYSTEM ENGINEERING
Demiter, Scott M	ETF OPERATIONS
Dorsh, Paul M	
Greenhalgh, Aaron M	TANK FARM PROJECTS ENGINEERING
Halgren, Dale L	ETF ENGINEERING
Huntington, Matthew R	TANK FARM PROJECTS ENGINEERING
Joslyn, Cameron C	ETF ENGINEERING
Laurenz, Julian E	TANK FARM PROJECTS ENGINEERING
Rice, Joseph P	TANK & PIPELINE INTEGRITY
Roosendaal, Gene D	TFP PROJECT MANAGEMENT
Rutherford, Wally	ETF ENGINEERING
Wall, Jeremy M	RETRVL & CLOSURE/PROJ ENV CMPL
White, Michael A	

DOCUMENT RELEASE AND CHANGE FORM	**Doc No:** RPP-RPT-62215 **Rev.** 00

14. **Distribution**

Name	Organization
Wilson, Nathaniel W	ETF PROJECTS ENGINEERING

RPP-RPT-62215
Revision 0

LERF Basin 41 Material Compatibility with Wastewater

Prepared by

M.M. Dahl
Sargent & Lundy for Washington River Protection Solutions, LLC

Date Published
May 2020

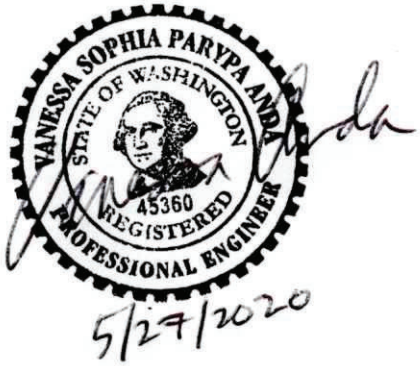

Prepared for the U.S. Department of Energy
Office of River Protection

Contract No. DE-AC27-08RV14800

Approved for Public Release;
Further Dissemination Unlimited

RPP-RPT-62215, Rev. 0

LERF BASIN 41 MATERIAL COMPATIBILITY WITH WASTEWATER

May 2020

prepared by

Sargent & Lundy
1100 Jadwin Avenue, Suite 400
Richland, Washington 99352-3425
(509) 946-3300

prepared for

Washington River Protection Solutions, LLC

TABLE OF CONTENTS

1.0 INTRODUCTION 1
2.0 BACKGROUND 1
2.1 Requirement Flowdown 2
3.0 SCOPE AND METHODOLOGY 4
3.1 Assessment Methodology 4
3.2 Inputs 5
3.3 Assessment Limitations 7
3.3.1 Radiation Resistance 7
3.3.2 Chemical Compatibility 9
4.0 EVALUATION 10
4.1 Radiation Resistance 10
4.2 Chemical Resistance 13
5.0 RECOMMENDATIONS 15
6.0 SUMMARY AND CONCLUSIONS 15
7.0 REFERENCES 15

LIST OF APPENDICES

Appendix A – S&L Calculation S54413.024-P-001, *LERF Basin 41 Radiological Dose Rate and Exposure*

LIST OF FIGURES

Figure 2-1. Basin 41 Liner System Schematic 3
Figure 2-2. Basin 41 Piping Regulation Interface View. 3

LIST OF TABLES

Table 2-1. Wastewater Compatibility Requirement Flowdown. 2
Table 3-1. Basin 41 Component for Evaluation List. 5
Table 3-2. Basin 41 Component Drawing List. 5
Table 3-3. LERF Liner Compatibility Limits. 6
Table 3-4. LERF Wastewater Estimated Bounding Dose Rates and Total Dose. 7
Table 4-1. Radiation Resistance of LERF Basin Wastewater Components. 11
Table 4-2. EPDM, CSPE, and Siloxane Compatibility with Liner Chemical Families. 13

LIST OF TERMS

Acronyms

CSPE	Chlorosulfonate polyethylene
EMF	Effluent Management Facility
EPDM	Ethylene Propylene Diene Monomer Rubber
EPRI	Electric Power Research Institute
ETF	Effluent Treatment Facility
FRP	Fiberglass-Reinforced Plastic
HDPE	High Density Polyethylene
LERF	Liquid Effluent Retention Facility
RCRA	Resource Conservation and Recovery Act
WAC	Washington Administrative Code
WTP	Waste Treatment and Immobilization Plant

Units

C	°degrees Celsius
in.	inch(es)
ft	Foot/feet
mil	1/1000 inch
lb	pound

1.0 INTRODUCTION

The Liquid Effluent Retention Facility (LERF) currently operates three basins adjacent to the Effluent Treatment Facility (ETF), located just north of the 200 East tank farms. The basins store wastewater from several Hanford sources, including condensate from the 242-A Evaporator, and dilute waste streams from solid waste disposal facilities, and site cleanup activities. The wastewater is eventually processed through ETF.

Once the Waste Treatment and Immobilization Plant (WTP) begins processing waste, it will send wastewater from the Effluent Management Facility (EMF) to the LERF, prompting the need for a fourth basin, 242AL-41, (Basin 41) to ensure sufficient storage capacity from the new source. Basin 41 will be sized the same as the other three basins, and will be able to hold approximately 7.8 million gallons of wastewater. Basin 41 was roughly dug out at the same time (1990) as the other active basins (242AL-42, 242AL-43, and 242AL-44), but further work has not been performed to complete the basin.

An assessment of certain materials of construction for Basin 41 and its ancillary equipment is necessary to demonstrate that the basin will be able to perform its function of retaining the wastewater. The materials will need to be compatible with all sources of wastewater - currently 242-A Evaporator condensate, dilute waste streams, groundwater, and EMF wastewater.

2.0 BACKGROUND

The construction of Basin 41 includes the construction of the following basin and ancillary equipment per the construction specification, RPP-SPEC-63632, *LERF Basin 41 Construction Specification*:

1. Basin 41 multipart liner system (Figure 2-1).
2. Basin 41 floating cover system.
3. Concrete catch basin including:
    a. Chemical resistant coatings
    b. Metallic and non-metallic piping and manifold systems, and
    c. Anchors for in-basin equipment.
4. The double containment reinforced thermosetting resin pipe (also known as Fiberglass reinforced pipe [FRP[1]]) extending into the catch basin.
    a. Two pipelines will be tied into existing lines, EVAP COND-PC5000 and WTP-001.
    b. Two additional intra-basin lines, 60M-010 and 60M-011.

[1] The manufacturer of the selected pipe refers to the product as FRP (Conley Composites). As a result, the pipe will be referred to as FRP for the remainder of this report.

5. Basin 41 equipment such as piping, risers, pumps, etc.

It is expected that Basin 41 will be a recipient of wastewater from several origins, including the new EMF wastewater stream. Prior to waste acceptance, the New Waste Stream Acceptance Checklist (HNF-3172, *Liquid Waste Processing Facilities Waste Acceptance Criteria*) must be completed and approved. Among other items, the checklist ensures that the constituents of the wastewater stream do not exceed the liner compatibility limits.

2.1 REQUIREMENT FLOWDOWN

The materials of construction are being evaluated to ensure that they are compatible with the wastewater in accordance with two Washington Administrative Codes (WACs). Waste transfer piping, up to the first valve in the catch basin, is regulated under WAC 173-303-640, *Tank Systems.* The basin liner is regulated under WAC 173-303-650, *Surface Impoundments.* The requirements from the WAC standards as they pertain to this material compatibility assessment are as described in Table 2-1. The WAC 173-303-640 regulation applicability is depicted in Figure 2-2.

Table 2-1. Wastewater Compatibility Requirement Flowdown.

Location	WAC Requirement	Part	Requirement (paraphrased for clarity)
Basin primary liner	173-303-650	(2)(a)(i)(A)	The impoundment liner will have the appropriate chemical properties to prevent failure due to physical contact with the wastewater to which they are exposed, climatic conditions, the stress of installation, and the stress of daily operation.
Up to first valve in manifold	173-303-640	(3)(a)	Owners or operators of new tank systems or components must obtain a written assessment, reviewed and certified by an independent, qualified registered professional engineer, attesting that the tank system has sufficient structural integrity and is acceptable for the storing and treating of dangerous waste. The assessment must show the tank system has sufficient structural strength, compatibility with the waste(s) to be stored or treated, and corrosion protection to ensure that it will not collapse, rupture, or fail.
		(3)(a)(iii)(A)(VIII)(B)(I)	The type and degree of external corrosion protection that are needed to ensure the integrity of the tank system during the use of the tank system or component, consisting of: Corrosion-resistant materials of construction such as special alloys, fiberglass reinforced plastic, etc.

Figure 2-1. Basin 41 Liner System Schematic.

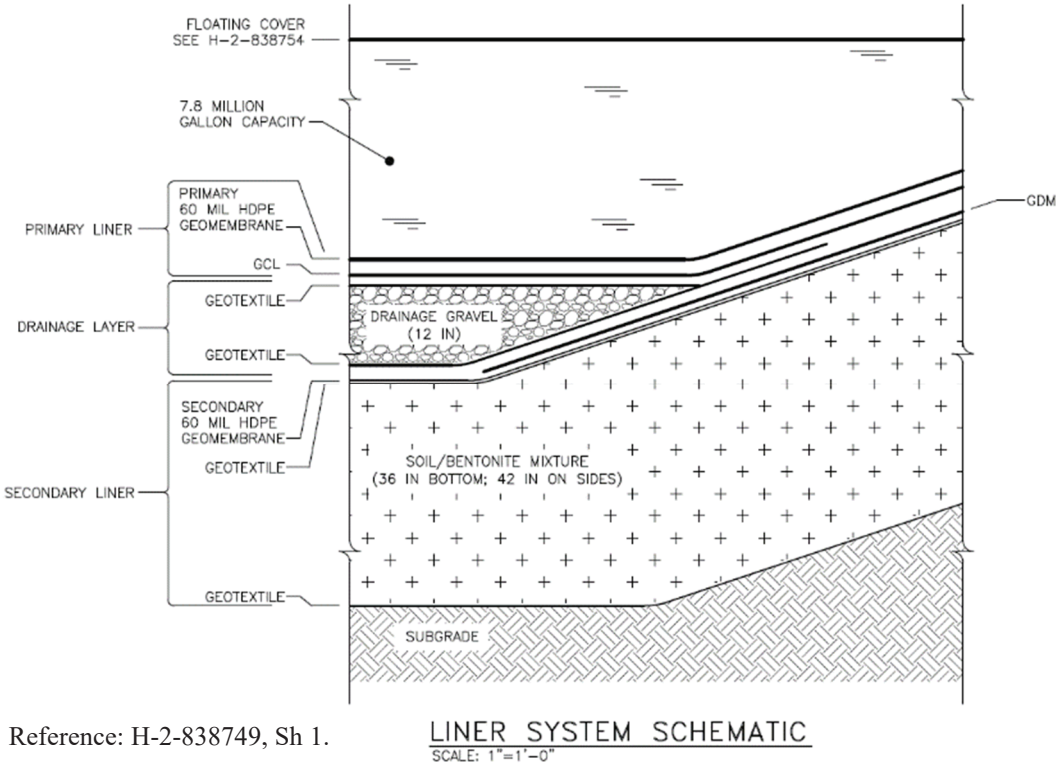

Reference: H-2-838749, Sh 1.

Figure 2-2. Basin 41 Piping Regulation Interface View.

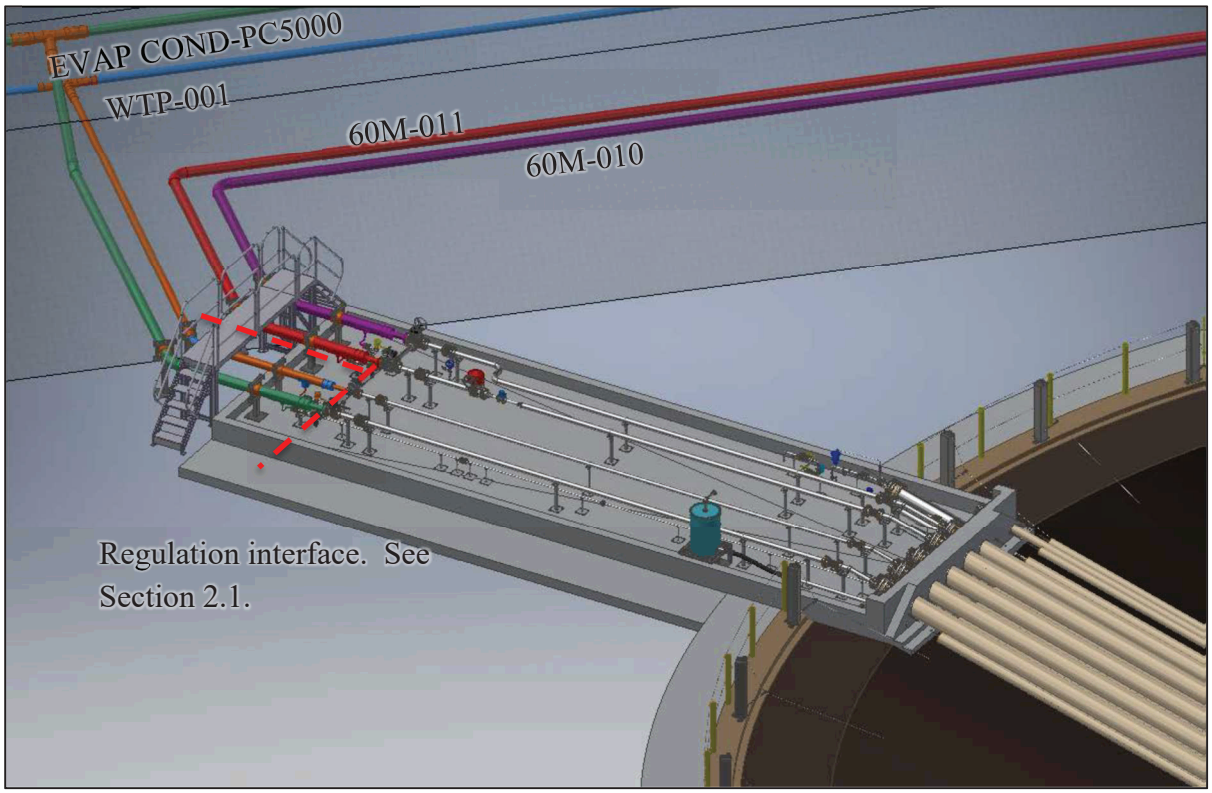

3.0 SCOPE AND METHODOLOGY

3.1 ASSESSMENT METHODOLOGY

This assessment evaluates the compatibility of applicable Basin 41 and ancillary equipment materials with the anticipated wastewater. Guidance contained in standard TFC-ENG-STD-34, *Standard for the Selection of Non-Metallic Materials in Contact with Tank Waste*, has been applied for this assessment. Based on the guidance in TFC-ENG-STD-34 and the WAC requirements, only the components listed below need to be assessed in this evaluation.

- Materials under WAC 173-303-640:
    1. FRP inner liner,
    2. Full Face gaskets, and
    3. Catch basin coating (secondary containment).
- Materials under WAC 173-303-650:
    1. Geomembrane liner, and
    2. Floating cover[2].

Radiation resistance, chemical resistance, temperature constraints, and application constraints will be considered in this evaluation. Materials used to construct the three operating basins were evaluated in WHC-SD-W105-TD-001, *9090 Test Results*. A follow-up compatibility assessment was performed by ETF personnel to expand on the wastewater simulant results to include the current chemical families and constituents now identified in HNF-3172. Where the materials used to construct Basin 41 are the same or similar to the original materials, operational experience in conjunction with previously documented evaluations will be used as input for this evaluation.

The following methodology was used to determine if the components are appropriate for use in Basin 41.

1. Calculate the expected dose rate and final dose of the LERF Basin wastewater sources (Appendix A) using The LERF Safety Basis Limits identified in Appendix D of HNF-3172.
2. Develop a component list (Table 3-1) derived from applicable drawings (Table 3-2).

[2] The floating cover is only mentioned as a part of the system to be inspected for integrity during and following installation. The requirement does not mandate that it be made out of a material that must be chemically resistant; however, since it is in direct contact with wastewater, it will be included to support discussion on maintenance.

3. Provide an evaluation of each material in the expected environment (Section 4.0).

4. Provide recommendations to facilitate component life (Section 5.0).

Table 3-1. Basin 41 Component for Evaluation List.

Component	Part	Material	Assembly and Environment
Basin Primary Liner	Geomembrane	HDPE	Basin 41
Full Face Gasket	Gasket	EPDM	FRP Pipe
Double Containment Primary (Inner) Piping and Fittings	Inner Liner	FRP - Liner Nexus (polyester veil with Epoxy resin)	FRP Buried and Above Grade Pipe
Basin Floating Cover	Bottom Layer Geomembrane	CSPE	Basin 41
Catch Basin Coating	Coating	Siloxane	Catch Basin

CSPE – Chlorosulfanated Polyethylene

Table 3-2. Basin 41 Component Drawing List.

Drawing and Sheet No	Title
H-2-838765, Sh 3-7	LERF Basin 41 Mechanical Sections
H-2-838767, Sh 1-2	LERF Basin 41 Catch Basin Isometric and Parts List

3.2 INPUTS

1. A design life for Basin 41 and ancillary equipment has not been established. For the purposes of this material evaluation, a design life of 30 years has been used to provide clarification and recommendations.

2. The LERF Liner Compatibility Limit table has been generated in HNF-3172. The table has been provided in Table 3-3.

Table 3-3. LERF Liner Compatibility Limits.

Chemical family	Constituent(s) or parameter(s)	Limit[1] (mg/L)
Alcohol/glycol	1-butanol	500,000
Alkanone[2]	acetone	200,000
Alkenone[3]	none targeted	N/A
Aromatic/cyclic hydrocarbon	acetophenone, benzene, carbozole, chrysene, cresol, di-n-octyl phthalate, diphenylamine, isophorone, pyridine, tetrahydrofuran	2,000
Halogenated hydrocarbon	Aroclors, carbon tetrachloride, chloroform, hexachlorobenzene, lindane (gamma-BHC), hexachlorocyclopentadiene, methylene chloride, p-chloroaniline, tetrachloroethylene, 2,4,6-trichlorophenol	2,000
Aliphatic hydrocarbon	none targeted	N/A
Ether	dichloroisopropyl ether	2,000
Other hydrocarbons	acetontrile, carbon disulfide, nnitrosodimethylamine, tributyl phosphate	2,000
Oxidizers	none targeted	N/A
Acids, bases, salts	ammonia, cyanide, anions, cations	100,000
pH	PH	0.5 < pH < 13.0

[1] Analytical data for a chemical family (as indicated) are summed using the following sum-of-fractions technique. The individual constituent concentrations, sum concentrations (for families), and pH values for a wastewater are then evaluated against the compatibility limit.

$$\sum_{n=1}^{i}\left(\frac{conc_n}{Limit_n}\right) \leq 1$$

where 'i' is the number of constituents in the chemical family that were detected.

[2] Ketone containing saturated alkyl group(s).

[3] Ketone containing unsaturated alkyl group(s).

Table Reference: HNF-3172

3. Dose rates were determined for the basin cover, liner, piping, and catch basin in Appendix A. The highest estimated dose rates for each system location were used for conservatism. Note that due to the configuration, the dose rate calculated for the basin wall is less than the dose rate calculated for the bottom of the liner. The wall dose rate will be neglected, and the bottom of the liner dose rate will be used for all of the liner. The dose rate and dose at 30 years for each component is presented in Table 3-4.

Table 3-4. LERF Wastewater Estimated Bounding Dose Rates and Total Dose.

Wastewater Dose Location	Dose Rate [rad/hr]	Total Exposure at 30 Years [rad]
Basin 41 Cover	2.84E-02	7,457
Basin 41 Liner		
Transfer Piping	8.58E-03	2,254
Catch Basin	3.43E-02	9,016

Reference: Appendix A

Note: The Basin 41 wall dose rate and total dose is less than the bottom of the basin, and will not be used in this evaluation.

4. Most literature data on the degradation of non-metallic materials, exposed to ionizing radiation, come from accelerated tests using high gamma radiation dose rates on free form specimens in air. Errors can arise in applying short-term, high-dose-rate test data to predict the effects of radiation on materials exposed to lower dose rates over long periods of time in liquid. For the purposes of this evaluation, it has been assumed that short-term, high-dose-rate test data can be reasonably applied to predict the performance of the basin non-metallic materials.

3.3 ASSESSMENT LIMITATIONS

3.3.1 Radiation Resistance

Radiation effects on materials are assumed to be the result of gamma radiation in this analysis. Beta radiation has been shown to affect waste transfer components over long periods of exposure in similar ways to gamma radiation (Wright 2006, Clegg 1991); however, due to beta's decreased ability to penetrate material, it is deemed conservative to consider the total dose delivered by the media in each stream to consist entirely of gamma. Gamma radiation, while less ionizing than beta, can better penetrate most substances and is therefore considered to have a much greater effect on the properties of polymeric materials (Wright 2006, Clegg 1991). It is for this reason that the overwhelming majority of data available for the effects of radiation on non-metallic materials pertains to the effects of gamma only; data related to the effects of beta on these compounds is limited. Any damage induced by beta radiation is likely to be conservatively bounded by the anticipated effects of gamma radiation.

Under irradiation, polymers generally undergo two types of reaction: cross-linking and/or chain scission. The cross-linking process increases the rigidity and hardness. Chain scission decreases the modulus of elasticity, reduces yield stress, increases elongation, and decreases hardness. Chain scission may also cause embrittlement or affect the release of hydrogen gas. Both cross-linking and chain scission can significantly alter the properties of a polymer; however, not all polymers are affected equally.

Radiation data for polymeric materials in the literature are difficult to apply directly to LERF Basin conditions. Nearly all radiation resistance data for polymers have been generated in short-term tests using high gamma radiation dose rates where the material under test is in air and not under tensile stress. Several important factors listed below must be considered when reviewing radiation test data generated in this manner.

1. Materials exposed to high dose rates will absorb more radiation dose before exhibiting a given loss in mechanical properties than materials irradiated at lower dose rates (Wright 2006). Thus, data generated with high dose rates and short exposure times cannot be reliably used to predict the service life of similar materials exposed to much lower dose rates for a longer period of time given the same total dose exposure. Dose rates for the evaluated components are much lower than typical dose rates used in accelerated materials testing.

2. Many radiation degradation products produced in polymers require oxygen to form (Wright 2006). Thus, the rate of radiation-induced degradation is often faster for materials irradiated in oxygen-containing environments than for materials irradiated in deoxygenated environments. Results from tests on materials irradiated in oxygenated environments cannot be reliably used to predict the service life of similar materials used in deoxygenated or reduced-oxygen environments.

3. Degradation rates also increase with temperature, largely due to the increase in oxygen permeability with temperatures (Wright 2006, Clegg 1991). Depending on test temperature, test data may not accurately reflect field conditions.

4. Degradation of materials due to irradiation continues after removal from the radiation source (Wright 2006). Thus, test data may not reflect service conditions, depending on how soon mechanical testing is performed following irradiation.

5. The rate of degradation increases when stress and radiation are concurrently applied (Wright 2006). Because almost no testing is performed with the polymer under stress, test results tend to overestimate the useful life of an irradiated polymer in service.

6. Radiation testing is most often performed on thin samples of materials (Wright 2006). Thin samples degrade more rapidly than thick samples. Depending on how close test specimen thicknesses are to installed material thicknesses, data may again be skewed.

7. The performance of gaskets is strongly dependent on the compressive properties of the elastomer (Wright 2006). Under irradiation, radiation-induced cross-linking may increase the modulus of elasticity of the material only slightly, but if this occurs while the material is in compression, there will be a significant loss of “elastic memory” and an associated loss in sealing capability (Wright 2006). Tests performed on relaxed elastomers, not under compression, will not likely be representative of materials to be used in service under compression to prevent leakage.

These traits of polymer irradiation data must be considered in the material analysis (as applicable) for the LERF Basin components. Unless test conditions match service conditions,

the estimated useful life analyses for polymers presented herein can only be considered a rough estimate of expected field performance.

It should be noted that these results are based only on a literature review of compatibility data and do not take into account possible synergistic effects of radiation plus chemical exposure, process upsets creating environments outside the bounds of this assessment, temperature differences, or other errors associated with applying short-term test data prediction of long-term performance.

3.3.2 Chemical Compatibility

The LERF can accept Hanford Site generated mixed, low-level, dangerous, or non-regulated wastewater, provided the wastewater meets the facilities' waste acceptance criteria as described in HNF-3172. Laboratory testing was performed on the initial wastewater simulant for compatibility with the High Density Polyethylene (HDPE) geomembrane liner and FRP prior to the construction of the original three basins (WHC-SD-W105-TD-001). As discussed in Design Input 2, the constituents in the original simulant were expanded in HNF-3172 to encompass chemical families, based on the testing and vendor compatibility data, to ensure the integrity of the basin liner and piping materials. These established threshold values are listed in HNF-3172 (and also presented in Table 3-3 in this document).

Although threshold values in HNF-3172 are already established for two of the materials in the Basin 41 system, the following information should be taken into consideration when understanding how laboratory test results apply to operational environments.

The predicted LERF Basin wastewater streams are, in effect, a dilute solution of many chemical constituents of varying concentrations. The material/chemical compatibility data generated from the original testing and the supplemental vendor data were generated from relatively short-term tests performed on material coupons subjected to solutions that do not fully represent the current wastewater composition(s). In the case of the original test data documented in WHC-SD-W105-TD-001, the recipe for the simulant no longer reflects the current wastewater water composition. The formulation for the simulant originally tested was limited to 22 constituents and as previously noted, was later expanded to encompass the chemical families in HNF-3172.

As described in TFC-ENG-STD-34, the geometry of the materials in this assessment contributes to how the material behaves in response to chemical exposure and changes in temperature. In general, “free-form” or unconstrained, unstressed specimens tend to suffer greater impacts from chemical exposure than do materials that are constrained during use (e.g., gaskets, seals, etc.). Since most chemical testing is performed on unstressed, free-form specimens of materials, test results are likely conservative as applied to constrained materials such as the gasket.

The limitations of applying laboratory test data, as described above, to predict actual operating behavior must be considered in the material analysis for the Basin 41 materials. The prediction of material behavior as presented herein can only be considered a rough estimate of expected field performance.

This evaluation may not account for all possible chemical interactions, synergistic effects (with radiation), or errors associated with applying short-term test data to long-term applications.

4.0 EVALUATION

4.1 RADIATION RESISTANCE

Radiation contribution to the degradation of Basin 41 materials is expected to be low in comparison to radiological thresholds used to evaluate materials. However, the overall impact of radiation on the integrity of the materials, including the synergistic effects of radiation with chemical attacks, cannot be ignored in this assessment. As previously stated, without test data that includes both radiation and chemical attack, the actual synergistic effects cannot be known; however, this assessment discusses the impact of both influences to help determine the expected impact on the materials.

Assuming continuous exposure to the LERF Basin wastewater bounding conditions, the maximum radiation doses over a 30 year life (Design Input 1), 7,457 rad, 2,254 rad, and 9,016 rad (0.007 Mrad, 0.002 Mrad, and 0.009 Mrad) for the basin cover and liner, transfer piping, and catch basin respectively (Design Input 3). The anticipated doses are well under the maximum material threshold values presented in Table 4-1.

Table 4-1 summarizes the results of the literature review on radiation resistance for the materials listed in Table 3-1. See below for a radiation resistance discussion of each material used in the basin.

Table 4-1. Radiation Resistance of LERF Basin Wastewater Components.

Material	Reference Name	Signs of Degradation at Radiation Exposure (Mrad) at 70°F		Notes
		Initial	Severe	
Polyester (FRP veil) [(1)]	**Polyester**	0.1	1.0	
Aromatic Amine Cured Bisphenol A Epoxy (FRP resin) [(1),(2)]	**Epoxy**	100	200	
Ethylene Propylene Diene Monomer Rubber [(1),(2)]	**EPDM**	40	200	Other sources cite initial degradation at 100 Mrad[4]
Siloxane[(3)]		0.5	N/A	Compression set highly sensitive, oxidation sensitive, peroxide cures leave residues that may oxidize radiation-cure better.
High Density Polyethlyene [(3)]	**HDPE**	0.38	10	Elongation increase at lowest reported threshold.
Chlorosulfonated Polyethelene [(1)]	**CSPE**	10	100	

[(1)] Wright 2006
[(2)] Clegg 1991
[(3)] Electric Power Research Institute (EPRI) NP-2129, *Radiation Effects on Organic Materials in Nuclear Plants*

FRP (veil and resin)

The direct buried pipes used to convey wastewater from outside of the LERF into the basins are composed of FRP. FRP is a composite material made from a polymer matrix (epoxy) reinforced with fibers (polyester veil and wound filaments). The wastewater is expected to only come into contact with and influence the inner liner. The inner liner is comprised of 60 mil composite corrosion barrier, comprised of Bisphenol A epoxy and a polyester veil. Though composite materials behave differently than their individual constituents, the resin in carbon filament epoxy composites has been shown to have the greatest effect on the outcome of mechanical properties following exposure to radiation (Clegg).

Detrimental effects posed to the polyester veil, which is more susceptible to failure, can influence the adhesion between the matrix and the fibers. However, the expected dose is low, and not expected to exceed the threshold of polyester fibers even without the barrier of an epoxy matrix.

FRP has been used to convey wastewater to the current basins since installation in the 1990s. There have been no reports of failures since installation. The ETF (including the LERF basins) was inspected in 2019 and an integrity assessment report was documented in RPP-IQRPE-50043, *FY19 Effluent Treatment Facility IQRPE Integrity Assessment*. The assessment concluded that the ETF tank system, including the FRP, is fit for use. In conjunction with the passed assessment, it was recommended that the facility and its equipment be reassessed within another ten years.

Radiation is not expected to have a great impact on the integrity of the FRP pipe used to convey wastewater to Basin 41 in a 30 year life, thus the FRP pipe is acceptable for continued use.

Ethylene Propylene Diene Monomer Rubber (EPDM)

EPDM is used as gasket material between the FRP pipe spools. EPDM is traditionally used as gasket material in other parts of Tank Farms due to its exceptional mechanical properties and radiation resistance.

Due to the high thresholds, and low expected dose, radiation is not expected to have a great impact on the integrity of the EPDM gaskets in the Basin 41 wastewater system in a 30 year life, thus the EPDM gaskets are acceptable for use.

Siloxane

Siloxane is a high performance engineered silicone-epoxy coating system intended for use as the top coat in the catch basin. The top coat is the material expected to provide secondary containment for piping in the catch basin. Additional coating details are located in RPP-SPEC-63632. The coating is expected to receive dose from wastewater in the transfer piping, and should not see any wastewater on the coating unless the piping has leaked during an upset condition. Siloxane coating systems are typically used for their broad chemical resistance, ultra-violet light resistance, flexibility, and hydrophobic nature. Traditional Siloxane resistance to ionizing radiation is not great due to crosslinking, particularly at elevated temperatures (EPRI). Little literature information could be gathered for the hybrid coating system recommended in the construction specification, so conservatively, the lower threshold will be assumed.

Due to the low expected dose, radiation is not expected to have a great impact on the integrity of the Siloxane coating on the catch basin in the Basin 41 wastewater system in a 30 year life, thus the Siloxane coating is acceptable for use.

HDPE

HDPE is used as the basin primary liner geomembrane. This material has an ionizing radiation threshold value much higher than the expected total dose for 30 years. Additionally, HDPE is used in the construction of the current basins, and has not had any reported integrity issues. As with the FRP, RPP-IQRPE-50043 concluded that the HDPE liner is fit for continued use.

Radiation is not expected to have a great impact on the integrity of the HDPE liner in the Basin 41 wastewater system in a 30 year life, thus the HDPE liner is acceptable for use.

Chlorosulfonated Polyethylene (CSPE)

A form of CSPE, Hypalon, was used in the original basin construction as the floating cover liner. Failure of a basin floating cover has been reported; however, the puncturing of the cover has been primarily attributed to mechanical means.

With respect to the radiation resistance reported for CSPE, radiation is not expected to have a great impact on the integrity of the CPSE floating cover in the Basin 41 wastewater system in a 30 year life, thus the CSPE floating cover is acceptable for use.

4.2 CHEMICAL RESISTANCE

The chemical resistance of the HDPE liner and FRP transfer piping with LERF wastewater is currently assessed using the process described in HNF-3172. Three additional materials, EPDM, CSPE, and Siloxane, require assessment per WAC regulations to ensure compatibility. These materials are compared to the chemical families listed in Table 3-3 in Table 4-2 to determine compatibility. See the evaluations for each material below.

HDPE and FRP

As previously discussed, two of the materials used in the current basin design, HDPE and FRP, were successfully tested using wastewater simulant in 1991. Both of these materials were used in the construction of the original three basins. Testing concluded that the materials did not suffer appreciable damage during waste exposure, and were fit for use. Subsequent evaluations following decades of operation have concluded the same. To ensure compliance with Resource Conservation and Recovery Act (RCRA) requirements, all wastewater streams are evaluated using the New Waste Stream Acceptance Checklist. This ensures that the components of the wastewater streams do not exceed the liner compatibility limits established to maintain integrity. As a result, these two materials are acceptable for use in the Basin 41 wastewater system for a 30 year life.

Table 4-2. EPDM, CSPE, and Siloxane Compatibility with Liner Chemical Families.

Chemical Family	Limit (mg/L)	Compatible		
		EPDM[1]	CSPE[1]	Siloxane[4,5,6]
Alcohol/glycol	500,000	Yes	Yes	Yes
Alkanone	200,000	Yes	Yes	Yes
Aromatic/cyclic hydrocarbon	2,000	No	No[2]	No
Halogenated hydrocarbon	2,000	No	No[2,3]	No
Ether	2,000	No	Yes	No
Other hydrocarbons	2,000	No	Yes	No
Acids, bases, salts	100,000	Yes	Yes	Yes
pH	0.5 < pH < 13.0	Yes	Yes	Yes

Note: See Table 3-3 for constituents.
Reference:
[1] Pruett, 2005
[2] Kelco
[3] Graco
[4] Ameron
[5] Warco Biltrite
[6] PPG

EPDM

EPDM is used for FRP piping gaskets. EPDM was compared to the listed chemical family and listed constituents (as available in literature) to determine if the material is acceptable for use (Table 4-2).

EPDM is considered broadly resistant to most acids at the expected ambient temperatures. EPDM is used in gaskets, seats, seals, and hoses in tank farm applications, and has excellent performance history when exposed to a broad range of chemicals in various wastes. EPDM is not considered resistant to hydrocarbons and ether. However, EPDM gaskets are currently installed between the FRP spools in existing basin infrastructure. Gasket leaking or other integrity issues have not been reported during regular inspections. As such, EPDM is acceptable for use in the Basin 41 system.

CSPE

CSPE is used for the Basin 41 floating cover. CSPE was compared to the listed chemical family and listed constituents (as available in literature) to determine if the material is acceptable for use (Table 4-2). An evaluation of the CSPE cover is not explicitly required to meet WAC 173-303-650; however, it has been included due to LERF history of cover failures, and in support of the maintenance and inspection requirements listed in the WAC.

CSPE is resistant to ultra-violet light and many chemicals, including acids and bases. CSPE is commonly used as geomembrane covers in potable water storage facilities. According to several manufacturers, CSPE is not generally considered compatible with aromatic or halogenated hydrocarbons; however, limited data could be compiled for compatibility with these chemicals. An instance of cover failure has been noted for Basin 42, however interviews with ETF personnel indicate that failure was likely due to excessive mechanical force on the liner during regular maintenance on the liner nearing the end of its design life. CSPE geomembrane manufacturer literature indicates an expected design life of 20-30 years for the cover materials (Raven). Embrittlement due to chemical exposure and long-term ultra-violet light exposure is not uncommon for polymers.

Due to regular cover inspection, wastewater stream review, limited mechanical interaction, and relatively low wastewater limits for aromatic and halogenated hydrocarbons, CSPE is acceptable for use in the Basin 41 system for a 30 year design life.

Siloxane

The selected Siloxane system is a silicone-epoxy hybrid coating system. According to the manufacturer, this system is generally considered for splash and spill resistance, and is broadly resistant to dilute and concentrated organic and inorganic acids, alkali, solvents and oxidizing chemicals (PPG). Its primary use is secondary containment applications in chemical process industries. The coating system is generally recognized to not be resistant to hydrocarbons. It is not expected to come into contact with the wastewater unless there is a leak in the FRP, limiting direct exposure. .

Based on limited exposure to the wastewater constituents, Siloxane is considered appropriate as a secondary containment coating for use for the life of the Basin 41 wastewater system.

5.0 RECOMMENDATIONS

Not all materials used to construct Basin 41 were evaluated in this report due to WAC regulations. Evaluation of radiation shows that bounding total doses are a factor of 50 to ~10^5 less than the dose at which respective materials experience initial degradation. However, a general recommendation for all non-metallic materials exposed to even low doses of radiation is to drain and flush (if possible) to reduce unnecessary exposure.

6.0 SUMMARY AND CONCLUSIONS

An assessment of the materials intended to complete the construction of Basin 41 was required to demonstrate that the basin would be able to perform its function of retaining the wastewater until further processing can be performed. The basin will need to be compatible with all sources of wastewater: 242-A Evaporator condensate, dilute waste streams, groundwater, and EMF wastewater. Prior to acceptance of each wastewater, the New Waste Stream Acceptance Checklist (HNF-3172) must be completed and approved. Among other items, the checklist ensures that the constituents of the wastewater stream do not exceed the constituents listed in the liner compatibility limits. The limits established for the liner were applied to this evaluation to determine the acceptability of materials for the new basin.

Based on the evaluation performed for each material in each environment in Section 4.0, including the assessment of historical use, all materials are fit for use for the Basin 41 wastewater system for the estimated 30 year design life assumed in this report.

The WAC requires that the liner not suffer damage a result of chemical incompatibility. The permit that the facility currently operates under accepts the initial testing and expansion of the chemical compatibility information. This assessment meets the material compatibility evaluation requirements established in WAC 173-303-640 and WAC 173-303-650.

Though the basin cover is not explicitly called out for a material evaluation prior to its use, the CSPE cover has been evaluated to support maintenance and inspection requirements listed in WAC 173-303-650. CSPE is not generally recommended for use with hydrocarbons, however, the relatively low hydrocarbon exposure and regular inspection and maintenance should ensure the life integrity of the material for 30 years.

7.0 REFERENCES

Clegg, D.W. and A.A. Collyer, 1991, “Irradiation Effects on Polymers,” Elsevier Science Publishing, Co. Inc., New York, New York.

Conley Composites, Queried 04/22/2020, [Epoxy Schedule 40/30 Double Contained Piping, PDS4030E (12/14) 1, 2020] https://www.conleyfrp.com/chemguide.php.

EPRI NP-2129, 1981, *Radiation Effects on Organic Materials in Nuclear Plants*, Electric Power Research Institute, Palo Alta, California.

Graco, Queried 05/04/2020, *[Chemical Compatibility*, 2013] https://www.graco.com/content/dam/graco/ipd/literature/misc/chemical-compatibility-guide/Graco_ChemCompGuideEN-B.pdf, accessed 5/4/2020.

H-2-838749, Sheet 1, 2020, *LERF Basin 41 Civil Bottom Liner*, Revision 1, Washington River Protection Solutions, LLC, Richland, Washington.

H-2-838765, Sheets 3-7, (2020), *LERF Basin 41 Mechanical Sections*, Revision 0, Washington River Protection Solutions, LLC, Richland, Washington.

H-2-838767, Sheets 1-2, (2020), *LERF Basin 41 Catch Basin Isometric and Parts List*, Revision 0, Washington River Protection Solutions, LLC, Richland, Washington.

HNF-3172, 2019, *Liquid Waste Processing Facilities Waste Acceptance Criteria*, Revision 9, Washington River Protection Solutions, LLC, Richland, Washington.

Kelco, Queried 05/04/2020, [*Chemical Compatibility Chart Hypalon*, 2008] http://www.kelco.com.au/wp-content/uploads/2009/02/hypalon-chemical-compatibility-guide.pdf, accessed 5/4/2020.

Ameron International, Queried 05/05/2020, [Mower, *Polysiloxanes*, 2003] http://extra.ivf.se/kemi/common/downloads/Kunskapsarkiv/Polysiloxaner/presentation_polysiloxanes.pdf.

PPG, 2017, *PPG PSX®[3] 700*, PPG Industries Ohio, Inc., Pittsburgh, PA.

Pruett, K. M., 2005, "Chemical Resistance Guide for Elastomers III Compass Publications," La Jolla, California.

Raven, Queried 05/05/2020 [*CSPE (Hypalon)-Chlorosulfonated Polyethelyne*] https://www.coloradolining.com/products/geomembranes/cspe-liner.html.

RPP-IQRPE-50043, 2019, *FY19 Effluent Treatment Facility IQRPE Integrity Assessment*, Revision 0, Washington River Protection Solutions, LLC, Richland, Washington.

RPP-SPEC-63632, 2020, *LERF Basin 41 Construction Specification*, Revision 0, Washington River Protection Solutions, LLC, Richland, Washington.

[3] *PSX* is registered trademark of PPG Industries Ohio, Inc., Pittsburgh, PA

TFC-ENG-STD-34, 2017, *Standard for the Selection of Non-Metallic Materials in Contact with Tank Waste*, Rev. A-1, Washington River Protection Solutions, LLC, Richland, Washington.

Warco Biltrite, Queried 05/04/2020 [*Chemical Resistance of Various Elastomers*] http://www.warco.com/pdf/Rubber-Elastomer-Chemical-Resistance-Guide-by-TLARGI-and-WARCO-BILTRITE.pdf.

Washington Administrative Code (WAC) 173-303-640, "Tank Systems," *Washington Administrative Code*, as amended.

Washington Administrative Code (WAC) 173-303-650, "Surface Impoundments," *Washington Administrative Code*, as amended.

WHC-SD-W105-TD-001, 1991, *9090 Test Results,* Revision 0, Washington River Protection Solutions, LLC, Richland, Washington.

Wright, D., 2006, "Failure of Plastics and Rubber Products: Causes, Effects, and Case Studies Involving Degradation, Rapra Technology Limited," Shropshire, United Kingdom.

APPENDIX A

S&L CALCULATION S54413.024-P-001, *LERF BASIN 41 RADIOLOGICAL DOSE RATE AND EXPOSURE*

Sargent & Lundy	CALCULATION COVER SHEET	Page No. 1 of 34	
		Date 5/12/2020	Rev. No. 0
		Calculation No: S54413.024-P-001	

Project No.	Project Title:	Client:
S551413.024	LERF Basin 41 Design	Washington River Protection Services, LLC

Title:
LERF Basin 41 Radiological Dose Rate and Exposure

Purpose and Objective:

The purpose of this calculation is to determine a conservative total radiological dose and expected total dose exposure at 30 years for LERF Basin 41. The results of this calculation will be used in the material compatibility evaluation, RPP-RPT-62215, *LERF Basin 41 Material Compatibility with Liquid Effluent*.

Rev. No.	Total Pages		Prepared By	Checked By	PM/TL
0	34	Print Name/ Sign:	MJ Feldmann	BD Groth	BD Groth
		Date:	5/12/2020	5/12/2020	5/12/2020

Revision Description (Revision Description/Affected Pages):
Initial Issue.

		Print Name/ Sign:			
		Date:			

Revision Description (Revision Description/Affected Pages):

Quality Assurance Procedure 3.1 Calculation Cover Sheet (01-19)

Sargent & Lundy

CALCULATION REVIEW CHECKLIST

Project No.	Calculation No.	Rev.	Page No.
S551413.024	S54413.024-P-001	0	2 of 35

Items Checked	Accept Y	Accept N	Accept N/A	Description of Resolution for Unacceptable Items
1. Cover sheets properly completed.	√			
2. Calculation sheet headers complete with calculation number, revision number, etc.	√			
3. Calculation sheet contents are legible, accurate, and complete per format.	√			
4. Listed attachments included.	√			
5. Calculation objective clearly described.	√			
6. Criteria are suitable and properly referenced to task specific documents.	√			
7. Assumptions and input data selected, described, reasonable, and attached or referenced to task documents.	√			
8. Calculation method identified and appropriate for the design activity.	√			
9. Calculation results reasonable and correctly described in results and conclusions.	√			
10. Physical property calculations generated by CAD software verified via hand calculations.			√	
11. Computer program identified with version and revision.	√			
12. Computer input/output provided or referenced and reasonable.	√			
13. Computer run traceable to calculation (file #, etc.).	√			
14. Computer input/output data and problem type within validation/verification range of use.	√			
15. Computer program validation/verification addressed.	√			
16. Computer operating system in use for calculation preparation is the same as when the software was verified on machine.	√			

Calculation Checking Method	√	Applicable Pages
1. Direct Step-by-Step Check	√	
2. Reference Chart(s) or Book(s) Comparison (Append Documentation)		
3. Alternate Calculation (Append Documentation)		

Comments:

Preparer (Print Name and Sign):	Date:
MJ Feldmann Monika Feldmann	5/12/2020
Checker (Print Name and Sign):	**Date:**
BD Groth Bruce D. Groth	5/12/2020

Signatures obtained only after discrepancies are corrected and comments are resolved.

Quality Assurance Procedure 3.1 Calculation Review Checklist (01-19)

Sargent & Lundy	CALCULATION SHEET		
Project No. S551413.024	**Calculation No.** S54413.024-P-001	**Rev.** 0	**Page No.** 3 of 34
Title: LERF Basin 41 Radiological Dose Rate and Exposure			
Prepared By: MJ Feldmann	**Date:** 5/12/2020	**Checked By:** BD Groth	**Date:** 5/12/2020

TABLE OF CONTENTS

1.0 PURPOSE 5
2.0 METHODOLOGY 5
3.0 DESIGN INPUTS 5
4.0 ASSUMPTIONS 6
5.0 COMPUTER SOFTWARE 6
6.0 CALCULATION 6
6.1 Dose Evaluation for Basin Liner and Cover 6
6.1.1 Average LERF Basin 41 Dimensions 6
6.1.2 Dose Rate for LERF Basin Liner and Cover 6
6.1.3 Estimated Exposure for LERF Basin Liner and Cover 7
6.2 Dose Evaluation for FRP Pipe 8
6.2.1 FRP Pipe Dimensions 8
6.2.2 Dose Rate for FRP 8
6.2.3 Estimated Exposure for FRP 9
6.2.4 Estimated Exposure for FRP in Catch Basin 9
7.0 RESULTS AND CONCLUSIONS 9
8.0 REFERENCES 10

Appendices

Appendix A
LERF Safety Basis Limits

Appendix B
MicroShield Output Files

Appendix C
LERF Basin 41 Sketches

Appendix D
FRP Data Sheet

Sargent & Lundy	CALCULATION SHEET		
Project No. S551413.024	**Calculation No.** S54413.024-P-001	**Rev.** 0	**Page No.** 4 of 34
Title: LERF Basin 41 Radiological Dose Rate and Exposure			
Prepared By: MJ Feldmann	**Date:** 5/12/2020	**Checked By:** BD Groth	**Date:** 5/12/2020

Tables

Table 6-1. Dose Rates Determined in MicroShield for Basin Liner. 7
Table 6-2. Total Dose Exposure for Basin Liner. 8
Table 6-3. Dose Rates Determined in MicroShield for FRP. 8
Table 6-4. Total Dose Exposure for FRP. 9
Table 6-5. Total Dose Exposure for Catch Basin. 9

Acronyms

LERF	Liquid Effluent Retention Facility
ETF	Effluent Treatment Facilty
FRP	Fiberglass reinforced pip

Quality Assurance Procedure 3.1 Calculation Sheet (01-19)

Sargent & Lundy	CALCULATION SHEET		
Project No. S551413.024	**Calculation No.** S54413.024-P-001	**Rev.** 0	**Page No.** 5 of 34
Title: LERF Basin 41 Radiological Dose Rate and Exposure			
Prepared By: MJ Feldmann	**Date:** 5/12/2020	**Checked By:** BD Groth	**Date:** 5/12/2020

1.0 PURPOSE

The purpose of this calculation is to determine a conservative total radiological dose and expected total dose exposure at 30 years for LERF Basin 41. The results of this calculation will be used in the material compatibility evaluation, RPP-RPT-62215, *LERF Basin 41 Material Compatibility with Liquid Effluent*.

2.0 METHODOLOGY

This analysis uses MicroShield and hand calculations to determine:

1. The dose rate for the wastewater using the LERF Safety Basis Limits, and
2. The expected radiological exposure at 30 years using the calculated dose rates.

3.0 DESIGN INPUTS

1. The LERF Safety Basis Limits from HNF-3172, *Liquid Waste Processing Facilities Waste Acceptance Criteria*, are presented in Appendix A. The LERF Safety Basis Limits were utilized in the MicroShield computer code (see Section 5.0) to determine the dose rate for the wastewater stored in LERF Basin 41 and in associated fiberglass reinforced piping (FRP).
2. LERF Basin 41 Dimensions are provided in Appendix C and are used to determine the dimensions of a representative rectangular volume for input into the MicroShield model. MicroShield uses simple geometric volumes in its analysis.
3. LERF Basin 41 is designed to be the same as the other three LERF basins and has a nominal capacity of approximately 7.8Mgal, Modification Traveler MT-50497, *Liquid Effluent Retention Facility (LERF) Basin 41* and HNF-3172, *Liquid Waste Processing Facilities Waste Acceptance Criteria*.
4. The waste specific gravity is 1.0. From a shielding perspective, the lower density is the conservative case, 67246-024-RFI-002, *Basin 41 Pump Design Criteria*.
5. FPR pipe used in the Basin 41 design is comprised of 3"/6" pipe-in-pipe and 4"/8" pipe-in-pipe (H-2-838765, *LERF Basin 41 Mechanical General Arrangement*). The 4"/8" pipe is used in this evaluation and will provide a more conservative dose rate. The nominal inside diameter of the inner 4"/8" pipe is 4". The FPR data sheet is provided in Appendix D.
6. The standard MicroShield densities were used for air and water were used.
7. The specific gravity of the FRP 1.85, Appendix D.
8. A 30ft section of FRP is evaluated.

Sargent & Lundy	CALCULATION SHEET		
Project No. S551413.024	**Calculation No.** S54413.024-P-001	**Rev.** 0	**Page No.** 6 of 34
Title: LERF Basin 41 Radiological Dose Rate and Exposure			
Prepared By: MJ Feldmann	**Date:** 5/12/2020	**Checked By:** BD Groth	**Date:** 5/12/2020

4.0 ASSUMPTIONS

No unverified assumptions are used in this calculation.

5.0 COMPUTER SOFTWARE

MicroShield Version 12.03 was used to model simple geometries and determine dose rate at a distance of interest. MicroShield utilizes a point kernel (discrete ordinate) algorithm, and contains built-in libraries of radionuclide decay constants, photon energies, and element- and energy-specific attenuation and build-up factors. The installation of MicroShield, Version 12.03, was verified and validated as documented in VV-19-06-006, *MicroShield Software Validation and Verification Report*. This software is installed on Sargent & Lundy Engineering Services, Inc., Computer No. RL_C0341, running on Windows 7 Version 6.1 (Build 7601: Service Pack 1).

6.0 CALCULATION

6.1 Dose Evaluation for Basin Liner and Cover

6.1.1 Average LERF Basin 41 Dimensions

At an elevation of 603.50 feet, the length of Basin 41 inside the anchor wall is 337.53 feet, the width of the basin inside the anchor wall is 277.53 feet. At an elevation of 579 feet, the length of the basin floor on the East side is 184.19 feet (34.4 feet +115.36 feet + 34.4 feet). The length of the basin floor on the south side is 124.69 feet (34.4 feet + 55.89 feet + 34.4 feet).

The average length of the basin of the basin is determined to be 260.86 feet. The average width of the basin is determined to be 201.11 feet. These dimensions are used to determine the height of the rectangle that represents the basin using a volume of 7.8Mgal. The corresponding height of the waste is determined as follows:

$$Depth = \frac{7{,}800{,}000\,gal\left(\frac{1\,ft^3}{7.481\,gal}\right)}{260.86\,ft\,x\,201.11\,ft} = 19.87\,ft$$

The dimensions for the rectangular volume used in the MicroShield model used are 260.86 feet x 201.11 feet x 19.87 feet, corresponding to a basin volume of 7.8 Mgal.

6.1.2 Dose Rate for LERF Basin Liner and Cover

The dose rate for the wastewater contained in Basin 41 is determined using the LERF Safety Basis Limits. The LERF and ETF are classified as below hazard Category 3 facilities. Wastewater accepted at the LERF will be controlled so that the wastewater dose consequence does not exceed that of the maximum bounding radiological source term evaluated in the 242A Liquid Effluent Retention Facility Auditable Safety Analysis (HNF-SD-LEF-ASA-002). This maximum bounding radiological source term is provided in Appendix A. The 200 Area Effluent Treatment Facility Auditable Safety Analysis Report (HNF-SD-ETF-ASA-001) requires that the ETF radiological inventory never exceed the Hazard Category 3 sum-of-fractions threshold of 1.0 (DOE-STD-1027-

CALCULATION SHEET

Project No. S551413.024	**Calculation No.** S54413.024-P-001	**Rev.** 0	**Page No.** 7 of 34
Title: LERF Basin 41 Radiological Dose Rate and Exposure			
Prepared By: MJ Feldmann	**Date:** 5/12/2020	**Checked By:** BD Groth	**Date:** 5/12/2020

92). Thus, the LERF Safety Basis Limits in Appendix A are used in the MicroShield model using the dimensions for a rectangular volume determined Section 6.1.1. The MicroShield output files are included in appendix B.

The dose rates are evaluated at 1 cm, 30 cm and 100 cm from the side of the basin and from the center of the largest face of the rectangular volume, for evaluating the cover. The dose rate estimated in MicroShield for the Basin Cover and Liner Floor model provide the most conservative dose rate at 30-cm. The dose rate in mR/hr is converted to Rad/hr by the following equation and the results are shown in Table 6-1:

$$1\,Rad \times \frac{100\ ergs/g}{Rad} \times \frac{1\,R}{86.9 ergs/g} = 1.15\ R$$

Table 6-1. Dose Rates Determined in MicroShield for Basin Liner.

Location	Distance from Location	Dose Rate [mR/hr]	Dose Rate [Rad/hr]
Basin Side Wall	At 1 cm from side	1.598e+00	1.39E-03
	At 30 cm from side	1.824e+00	1.59E-03
	At 100 cm from side	1.639e+00	1.43E-03
Basin Cover and Liner Floor	At 1 cm from cover	8.27E+00	7.19E-03
	At 30 cm from cover	3.26E+01	2.84E-02
	At 100 cm from cover	2.98E+01	2.59E-02

6.1.3 Estimated Exposure for LERF Basin Liner and Cover

The expected total radiological exposure for the basin liner and cover are calculated using the dose rates determined in Section 6.1.2. The total radiological exposures for 30 year period are presented in Table 6-2. The total exposure estimated for the Basin Cover and Liner Floor at 30-com provide the most conservative estimate of exposure to the liner.

For the Basin Side Wall:

$$Total\ Dose\ Exposure = 1.39E-03 \frac{Rad}{hr}\ x\ 24 \frac{hr}{day}\ x\ 365 \frac{days}{year}\ x\ 30\ years = 365\ Rad$$

Quality Assurance Procedure 3.1 Calculation Sheet (01-19)

CALCULATION SHEET

Project No. S551413.024	**Calculation No.** S54413.024-P-001	**Rev.** 0	**Page No.** 8 of 34
Title: LERF Basin 41 Radiological Dose Rate and Exposure			
Prepared By: MJ Feldmann	**Date:** 5/12/2020	**Checked By:** BD Groth	**Date:** 5/12/2020

Table 6-2. Total Dose Exposure for Basin Liner.

Location	Distance from Location	Dose Rate [Rad/hr]	Total Exposure at 30 Years [Rad]
Basin Side Wall	At 1 cm from side	1.39E-03	365
	At 30 cm from side	1.59E-03	417
	At 100 cm from side	1.43E-03	375
Basin Cover and Liner Floor	At 1 cm from cover	7.19E-03	1,889
	At 30 cm from cover	2.84E-02	**7,457**
	At 100 cm from cover	2.59E-02	6,819

6.2 Dose Evaluation for FRP Pipe

6.2.1 FRP Pipe Dimensions

The dimensions for the FRP evaluated use a nominal 4-in inner diameter, a wall thickness of 0.48-in, and a length of 30 feet. Experience with analyzing line sources shows that dose rates go up very little for line lengths longer than 10 feet, using a 30 feet length of pipe is bounding.

6.2.2 Dose Rate for FRP

The dose rate for the wastewater contained in the FRP is determined using the LERF Safety Basis Limits in Appendix A. The 200 Area Effluent Treatment Facility Auditable Safety Analysis Report (HNF-SD-ETF-ASA-001) requires that the ETF radiological inventory never exceed the Hazard Category 3 sum-of-fractions threshold of 1.0 (DOE-STD-1027-92). Thus, the LERF Safety Basis Limits in Appendix A are used in the MicroShield model using the dimensions for a rectangular volume determined Section 6.1. The MicroShield output files are included in appendix B.

The dose rate was evaluated in MicroShield at 1 cm, 30 cm and 100 cm. The results are shown in Table 6-3. The dose rate is presented in mR/hr and Rad/hr.

Table 6-3. Dose Rates Determined in MicroShield for FRP.

Location	Dose Rate [mR/hr]	Dose Rate [Rad/hr]
At 1 cm	9.86E+00	8.58E-03
At 30 cm	1.32E+00	1.14E-03
At 100 cm	4.82E-01	4.19E-04

Quality Assurance Procedure 3.1 Calculation Sheet (01-19)

CALCULATION SHEET

Project No. S551413.024	**Calculation No.** S54413.024-P-001	**Rev.** 0	**Page No.** 9 of 34
Title: LERF Basin 41 Radiological Dose Rate and Exposure			
Prepared By: MJ Feldmann	**Date:** 5/12/2020	**Checked By:** BD Groth	**Date:** 5/12/2020

6.2.3 Estimated Exposure for FRP

The expected total radiological exposure is calculated using the dose rate determined in Section 6.2.2. The total radiological exposure for a 30 year period is presented in Table 6-4.

$$Total\ Dose\ Exposure = 8.58E-03\frac{Rad}{hr}\ x\ 24\frac{hr}{day}\ x\ 365\ \frac{days}{year}\ x\ 30\ years = 2{,}254\ Rad$$

Table 6-4. Total Dose Exposure for FRP.

Location	Dose Rate [Rad/hr]	Total Exposure at 30 Years [Rad]
At 1 cm	8.58E-03	**2,254**
At 30 cm	1.14E-03	301
At 100 cm	4.19E-04	110

6.2.4 Estimated Exposure for FRP in Catch Basin

The expected total radiological exposure for the catch basin is calculated using the dose rate and total dose determined in Section 6.2.3. There are four pipes in the catch basin. The total dose is conservatively multiplied by four to estimate the total exposure to the catch basin. The total radiological exposure for a 30 year period is presented in Table 6-5.

Table 6-5. Total Dose Exposure for Catch Basin.

Location	Dose Rate [Rad/hr]	Total Exposure at 30 Years [Rad]
At 1 cm	3.43-02	**9,016**
At 30 cm	4.56E-03	1,204
At 100 cm	1.68E-03	440

7.0 RESULTS AND CONCLUSIONS

Radiation resistance is evaluated at various exposure thresholds for the LERF within the operational environment. Radiological thresholds evaluated for non-metallic components typically include 5 Mrad, 10 Mrad, 40 Mrad, and 100 Mrad. The total expected dose determined for 30 years for LERF Basin 41 liner, cover and associated FRP are all less than 10,000 Rad (0.01 Mrad).

Quality Assurance Procedure 3.1 Calculation Sheet (01-19)

Sargent & Lundy	CALCULATION SHEET		
Project No. S551413.024	**Calculation No.** S54413.024-P-001	**Rev.** 0	**Page No.** 10 of 34
Title: LERF Basin 41 Radiological Dose Rate and Exposure			
Prepared By: MJ Feldmann	**Date:** 5/12/2020	**Checked By:** BD Groth	**Date:** 5/12/2020

8.0 REFERENCES

67246-024-RFI-002, *Request for Information: Basin 41 Pump Design Criteria, U.S.* Rev. 0, Department of Energy, Richland, Washington

DOE-STD-1027-92, *Hazard Categorization and Accident Analysis Techniques for Compliance with DOE Order 5480.23*, Nuclear Safety Analysis Reports, U.S. Department of Energy, Washington, D.C.

H-2-838749 SH 1, *LERF Basin 41 Civil Bottom Liner,* U.S. Department of Energy, Richland, Washington.

H-2-838765, SH 1-11, *LERF Basin 41 Mechanical General Arrangement*, U.S. Department of Energy, Richland, Washington.

HNF-3172, *Liquid Waste Processing Facilities Waste Acceptance Criteria*, Rev. 9, Washington River Protection Solutions, LLC, Richland, Washington.

HNF-SD-ETF-ASA-001, 200 Area Effluent Treatment Facility Auditable Safety Analysis Report, Fluor Hanford Inc., Richland, Washington.

HNF-SD-LEF-ASA-002, 242AL Liquid Effluent Retention Facility Auditable Safety Analysis, Fluor Hanford Inc., Richland, Washington

MT-50497, *2019, Liquid Effluent Retention Facility (LERF) Basin 41 Modification Traveler*, Rev. 0,

RPP-RPT-62215, LERF Basin 41 Material Compatibility with Liquid Effluent.

VV-19-06-006, MicroShield Software Validation and Verification Report, Sargent & Lundy, Richland, Washington.

Sargent & Lundy	CALCULATION SHEET		
Project No. S551413.024	**Calculation No.** S54413.024-P-001	**Rev.** 0	**Page No.** 11 of 34
Title: LERF Basin 41 Radiological Dose Rate and Exposure			
Prepared By: MJ Feldmann	**Date:** 5/12/2020	**Checked By:** BD Groth	**Date:** 5/12/2020

APPENDIX A

LERF SAFETY BASIS LIMITS

Quality Assurance Procedure 3.1 Calculation Sheet (01-19)

Sargent & Lundy

CALCULATION SHEET

Project No. S551413.024	**Calculation No.** S54413.024-P-001	**Rev.** 0	**Page No.** 12 of 34
Title: LERF Basin 41 Radiological Dose Rate and Exposure			
Prepared By: MJ Feldmann	**Date:** 5/12/2020	**Checked By:** BD Groth	**Date:** 5/12/2020

Table A-1. LERF Safety Basis Limits from HNF-3172, *Table D-1. Target Para LERF Maximum Bounding Radiological Source Term*,

Table D-1. Target Para LERF Maximum Bounding Radiological Source Term.

Radionuclide	Maximum Bounding Concentration (Ci/L)[1,2]
Tritium	2.4 E-04
Carbon-14	1.6 E-06
Cobalt-60	2.4 E-06
Selenium-79	1.5 E-07
Strontium-90	4.2 E-05
Niobium-94	2.6 E-07
Technetium-99	1.8 E-05
Ruthenium-106	6.5 E-07
Iodine-129	1.8 E-06
Cesium-134	4.1 E-07
Cesium-137	1.0E-05
Cerium-144	2.0E-05
Europium-154	9.8 E-06
Europium-155	6.3 E-05
Radium-226	6.4 E-08
Uranium (gross)[3]	2.1 E-10
Neptunium-237	2.1 E-09
Plutonium-238	2.8 E-09
Plutonium-239/240	1.8E-08
Plutonium-241	2.6 E-08
Americium-241	1.4 E-09
Curium-244	2.5 E-08

[1] HNF SD WM-SAD-040, *Liquid Effluent Retention Facility Final Hazard Category Determination*, Fluor Hanford Inc., Richland, Washington.

[2] Individual radionuclide concentrations in the incoming wastewater may exceed the defined maximum bounding concentration provided the dose consequence associated with the wastewater is less than or equal to the dose consequence limits defined by the LERF Hazard Category Determination.

[3] As Uranium-234

Quality Assurance Procedure 3.1 Calculation Sheet (01-19)

Sargent & Lundy

CALCULATION SHEET

Project No. S551413.024	**Calculation No.** S54413.024-P-001	**Rev.** 0	**Page No.** 13 of 34
Title: LERF Basin 41 Radiological Dose Rate and Exposure			
Prepared By: MJ Feldmann	**Date:** 5/12/2020	**Checked By:** BD Groth	**Date:** 5/12/2020

Table A-2. LERF Liner Compatibility Limits from HNF-3172, *Table E-1. Liquid Waste Processing Facility Waste Acceptance Criteria*,

Chemical family	Constituent(s) or parameter(s)	Limit[1] (mg/L)
Alcohol/glycol	1-butanol	500,000
Alkanone[2]	acetone	200,000
Alkenone[3]	none targeted	NA
Aromatic/cyclic hydrocarbon	acetophenone, benzene, carbozole, chrysene, cresol, di-n-octyl phthalate, diphenylamine, isophorone, pyridine, tetrahydrofuran	2,000
Halogenated hydrocarbon	Aroclors, carbon tetrachloride, chloroform, hexachlorobenzene, lindane (gamma-BHC), hexachlorocyclopentadiene, methylene chloride, p-chloroaniline, tetrachloroethylene, 2,4,6-trichlorophenol	2,000
Aliphatic hydrocarbon	none targeted	NA
Ether	dichloroisopropyl ether	2,000
Other hydrocarbons	acetontrile, carbon disulfide, n-nitrosodimethylamine, tributyl phosphate	2,000
Oxidizers	none targeted	NA
Acids, bases, salts	ammonia, cyanide, anions, cations	100,000
pH	PH	0.5 < pH < 13.0

[1] Analytical data for a chemical family (as indicated) are summed using the following sum-of-fractions technique. The individual constituent concentrations, sum concentrations (for families), and pH values for a wastewater are then evaluated against the compatibility limit.

$$\sum_{n=1}^{i}\left(\frac{conc_n}{Limit_n}\right) \le 1$$

where 'i' is the number of constituents in the chemical family that were detected.

[2] Ketone containing saturated alkyl group(s).

[3] Ketone containing unsaturated alkyl group(s).

mg/L = milligrams per liter
NA = not applicable

Quality Assurance Procedure 3.1 Calculation Sheet (01-19)

Sargent & Lundy	CALCULATION SHEET		
Project No. S551413.024	**Calculation No.** S54413.024-P-001	**Rev.** 0	**Page No.** 14 of 34
Title: LERF Basin 41 Radiological Dose Rate and Exposure			
Prepared By: MJ Feldmann	**Date:** 5/12/2020	**Checked By:** BD Groth	**Date:** 5/12/2020

APPENDIX B

MICROSHIELD OUTPUT FILES

Quality Assurance Procedure 3.1 Calculation Sheet (01-19)

Sargent & Lundy

CALCULATION SHEET

Project No. S551413.024	**Calculation No.** S54413.024-P-001	**Rev.** 0	**Page No.** 15 of 34
Title: LERF Basin 41 Radiological Dose Rate and Exposure			
Prepared By: MJ Feldmann	**Date:** 5/12/2020	**Checked By:** BD Groth	**Date:** 5/12/2020

B1.0 LERF Basin Liner

Case Summary of LERF Basin 41 — Page 1 of 4

MicroShield 12.03
Sargent & Lundy

Date	Preparer	Reviewer

File Name	Run Date	Run Time	Duration
C:\Users\mfeldmann\Desktop\LERF Dose\lerf basin.msd	May 4, 2020	6:36:15 AM	00:00:04

Project Info	
Case Title	LERF Basin 41
Description	Basin, 1 cm, 30 cm and 100 cm
Geometry	13 - Rectangular Volume

Source Dimensions	
Length	6.130e+03 cm (201 ft 1.320 in)
Width	7.951e+03 cm (260 ft 10.320 in)
Height	605.638 cm (19 ft 10.440 in)

Dose Points

No.	X	Y	Z
#1	6.131e+03 cm (201 ft 1.780 in)	304.608 cm (9 ft 11.924 in)	3.976e+03 cm (130 ft 5.160 in)
#2	6.161e+03 cm (202 ft 1.591 in)	304.6 cm (9 ft 11.921 in)	3.976e+03 cm (130 ft 5.354 in)
#3	6.231e+03 cm (204 ft 5.150 in)	304.6 cm (9 ft 11.921 in)	3.976e+03 cm (130 ft 5.354 in)

Shields

Shield N	Dimension	Material	Density (g/cm³)
Source	1.04e+06 ft³	Water	1
Air Gap		Air	0.00122

Source Input: Grouping Method - Standard Indices
Number of Groups: 25
Lower Energy Cutoff: 0.015
Photons< 0.015: Incluced
Library: Grove

Nuclide	Ci	Bq	µCi/cm³	Bq/cm³
Am-241	4.1325e-002	1.5290e+009	1.4000e-006	5.1800e-002
Ba-137m	2.7924e+002	1.0332e+013	9.4600e-003	3.5002e+002
C-14	4.7228e+001	1.7475e+012	1.6000e-003	5.9200e+001
Ce-144	5.9036e+002	2.1843e+013	2.0000e-002	7.4000e+002
Cm-244	7.3794e-001	2.7304e+010	2.5000e-005	9.2500e-001
Co-60	7.0843e+001	2.6212e+012	2.4000e-003	8.8800e+001

file:///C:/Users/mfeldmann/Grove%20Engineering/MicroShield%2012/html/lerf%20basin-5_4_2020-6_36_19%20AM.html — 5/4/2020

Quality Assurance Procedure 3.1 — Calculation Sheet (01-19)

Sargent & Lundy

CALCULATION SHEET

Project No. S551413.024	**Calculation No.** S54413.024-P-001	**Rev.** 0	**Page No.** 16 of 34
Title: LERF Basin 41 Radiological Dose Rate and Exposure			
Prepared By: MJ Feldmann	**Date:** 5/12/2020	**Checked By:** BD Groth	**Date:** 5/12/2020

Case Summary of LERF Basin 41 Page 2 of 4

Cs-134	1.2102e+001	4.4778e+011	4.1000e-004	1.5170e+001
Cs-137	2.9518e+002	1.0922e+013	1.0000e-002	3.7000e+002
Eu-154	2.8927e+002	1.0703e+013	9.8000e-003	3.6260e+002
Eu-155	1.8596e+003	6.8806e+013	6.3000e-002	2.3310e+003
H-3	7.0843e+003	2.6212e+014	2.4000e-001	8.8800e+003
I-129	5.3132e+001	1.9659e+012	1.8000e-003	6.6600e+001
Nb-94	7.6746e+000	2.8396e+011	2.6000e-004	9.6200e+000
Np-237	6.1987e-002	2.2935e+009	2.1000e-006	7.7700e-002
Pr-144	5.8191e+002	2.1531e+013	1.9714e-002	7.2942e+002
Pu-238	8.2650e-002	3.0580e+009	2.8000e-006	1.0360e-001
Pu-239	5.3132e-001	1.9659e+010	1.8000e-005	6.6600e-001
Pu-241	7.6746e-001	2.8396e+010	2.6000e-005	9.6200e-001
Ra-226	1.8891e+000	6.9898e+010	6.4000e-005	2.3680e+000
Rh-106	1.9187e+001	7.0990e+011	6.5000e-004	2.4050e+001
Ru-106	1.9187e+001	7.0990e+011	6.5000e-004	2.4050e+001
Se-79	4.4277e+000	1.6382e+011	1.5000e-004	5.5500e+000
Sr-90	1.2397e+003	4.5871e+013	4.2000e-002	1.5540e+003
Tc-99	5.3132e+002	1.9659e+013	1.8000e-002	6.6600e+002
U-234	6.1987e-003	2.2935e+008	2.1000e-007	7.7700e-003
Y-90	1.2397e+003	4.5871e+013	4.2000e-002	1.5540e+003

Buildup

Buildup: The material reference is Source.

Integration Parameters

X Direction	10
Y Direction	20
Z Direction	20

Results With Buildup: Dose Point No. 1 - (X = 2.01e+02, Y = 9.9937, Z = 130.43) ft

Energy (MeV)	Activity (Photons/sec)	Energy Flux (MeV/cm²/sec)	Photon Flux (Photons/cm²/sec)	Exposure Rate (mR/hr)	Absorbed Dose Rate (mrad/hr)	Absorbed Dose Rate (mGy/hr)
1.500e-02	6.949e+12	3.447e-23	2.298e-21	2.956e-24	2.581e-24	2.581e-26
2.000e-02	5.651e+07	8.491e-28	4.245e-26	2.941e-29	2.568e-29	2.568e-31
3.000e-02	2.271e+12	7.371e-12	2.457e-10	7.305e-14	6.377e-14	6.377e-16
4.000e-02	1.690e+13	2.931e-06	7.327e-05	1.296e-08	1.132e-08	1.132e-10
5.000e-02	4.610e+12	9.196e-05	1.839e-03	2.450e-07	2.139e-07	2.139e-09

file:///C:/Users/mfeldmann/Greye%20Engineering/MicroShield%2012/html/lerf%20basin-5_4_2020-4_36_19%20AM.html 5/4/2020

Quality Assurance Procedure 3.1 Calculation Sheet (01-19)

Sargent & Lundy

CALCULATION SHEET

Project No. S551413.024	Calculation No. S54413.024-P-001	Rev. 0	Page No. 17 of 34
Title: LERF Basin 41 Radiological Dose Rate and Exposure			
Prepared By: MJ Feldmann	Date: 5/12/2020	Checked By: BD Groth	Date: 5/12/2020

Case Summary of LERF Basin 41 Page 3 of 4

6.000e-02	9.219e+11	2.363e-04	3.939e-03	4.694e-07	4.098e-07	4.098e-09
8.000e-02	2.172e+13	7.648e-02	9.561e-01	1.210e-04	1.057e-04	1.057e-06
1.000e-01	1.855e+13	2.583e-01	2.583e+00	3.952e-04	3.450e-04	3.450e-06
1.500e-01	2.359e+12	1.926e-01	1.284e+00	3.171e-04	2.769e-04	2.769e-06
2.000e-01	7.332e+11	1.614e-01	8.070e-01	2.849e-04	2.487e-04	2.487e-06
3.000e-01	1.632e+08	1.272e-04	4.239e-04	2.412e-07	2.106e-07	2.106e-09
4.000e-01	7.636e+10	1.411e-01	3.527e-01	2.749e-04	2.400e-04	2.400e-06
5.000e-01	1.760e+11	6.315e-01	1.263e+00	1.240e-03	1.082e-03	1.082e-05
6.000e-01	1.110e+13	6.811e+01	1.135e+02	1.329e-01	1.161e-01	1.161e-03
8.000e-01	5.166e+12	7.348e+01	9.186e+01	1.398e-01	1.220e-01	1.220e-03
1.000e+00	5.946e+12	1.608e+02	1.608e+02	2.963e-01	2.587e-01	2.587e-03
1.500e+00	6.881e+12	5.817e+02	3.878e+02	9.788e-01	8.545e-01	8.545e-03
2.000e+00	1.667e+11	3.053e+01	1.526e+01	4.720e-02	4.121e-02	4.121e-04
Total	**1.045e+14**	**9.161e+02**	**7.765e+02**	**1.598e+00**	**1.395e+00**	**1.395e-02**

Results With Buildup: Dose Point No. 2 - (X = 2.02e+02, Y = 9.99e+00, Z = 1.30e+02) ft

Energy (MeV)	Activity (Photons/sec)	Energy Flux (MeV/cm²/sec)	Photon Flux (Photons/cm²/sec)	Exposure Rate (mR/hr)	Absorbed Dose Rate (mrad/hr)	Absorbed Dose Rate (mGy/hr)
1.500e-02	6.949e+12	3.160e-23	2.106e-21	2.710e-24	2.366e-24	2.366e-26
2.000e-02	5.651e+07	7.784e-28	3.892e-26	2.696e-29	2.354e-29	2.354e-31
3.000e-02	2.271e+12	5.430e-11	1.810e-09	5.381e-13	4.698e-13	4.698e-15
4.000e-02	1.690e+13	1.123e-05	2.808e-04	4.968e-08	4.337e-08	4.337e-10
5.000e-02	4.610e+12	2.691e-04	5.382e-03	7.168e-07	6.258e-07	6.258e-09
6.000e-02	9.219e+11	6.006e-04	1.001e-02	1.193e-06	1.041e-06	1.041e-08
8.000e-02	2.172e+13	1.680e-01	2.100e+00	2.659e-04	2.321e-04	2.321e-06
1.000e-01	1.855e+13	5.211e-01	5.211e+00	7.972e-04	6.960e-04	6.960e-06
1.500e-01	2.359e+12	3.450e-01	2.300e+00	5.682e-04	4.960e-04	4.960e-06
2.000e-01	7.332e+11	2.685e-01	1.342e+00	4.738e-04	4.136e-04	4.136e-06
3.000e-01	1.632e+08	1.923e-04	6.411e-04	3.648e-07	3.185e-07	3.185e-09
4.000e-01	7.636e+10	2.002e-01	5.005e-01	3.901e-04	3.405e-04	3.405e-06
5.000e-01	1.760e+11	8.535e-01	1.707e+00	1.675e-03	1.463e-03	1.463e-05
6.000e-01	1.110e+13	8.867e+01	1.478e+02	1.731e-01	1.511e-01	1.511e-03
8.000e-01	5.166e+12	9.039e+01	1.130e+02	1.719e-01	1.501e-01	1.501e-03
1.000e+00	5.946e+12	1.893e+02	1.893e+02	3.490e-01	3.047e-01	3.047e-03
1.500e+00	6.881e+12	6.397e+02	4.265e+02	1.076e+00	9.396e-01	9.396e-03
2.000e+00	1.667e+11	3.218e+01	1.609e+01	4.976e-02	4.344e-02	4.344e-04
Total	**1.045e+14**	**1.043e+03**	**1.682e+03**	**1.824e+00**	**1.593e+00**	**1.593e-02**

file:///C:/Users/mfeldmann/Greye%20Engineering/MicroShield%2012/html/lerf%20basin-5_4_2020-4_36_19%20AM.html 5/4/2020

Quality Assurance Procedure 3.1 Calculation Sheet (01-19)

Sargent & Lundy

CALCULATION SHEET

Project No. S551413.024	**Calculation No.** S54413.024-P-001	**Rev.** 0	**Page No.** 18 of 34
Title: LERF Basin 41 Radiological Dose Rate and Exposure			
Prepared By: MJ Feldmann	**Date:** 5/12/2020	**Checked By:** BD Groth	**Date:** 5/12/2020

Case Summary of LERF Basin 41 Page 6 of 4

Results With Buildup: Dose Point No. 3 - (X = 2.04e+02, Y = 9.99e+00, Z = 1.30e+02) ft

Energy (MeV)	Activity (Photons/sec)	Energy Flux (MeV/cm²/sec)	Photon Flux (Photons/cm²/sec)	Exposure Rate (mR/hr)	Absorbed Dose Rate (mrad/hr)	Absorbed Dose Rate (mGy/hr)
1.500e-02	6.949e+12	2.701e-23	1.801e-21	2.317e-24	2.023e-24	2.023e-26
2.000e-02	5.651e+07	6.655e-28	3.327e-26	2.305e-29	2.012e-29	2.012e-31
3.000e-02	2.271e+12	1.909e-10	6.364e-09	1.892e-12	1.652e-12	1.652e-14
4.000e-02	1.690e+13	2.408e-05	6.019e-04	1.065e-07	9.296e-08	9.296e-10
5.000e-02	4.610e+12	4.698e-04	9.396e-03	1.251e-06	1.093e-06	1.093e-08
6.000e-02	9.219e+11	9.428e-04	1.571e-02	1.873e-06	1.635e-06	1.635e-08
8.000e-02	2.172e+13	2.361e-01	2.951e+00	3.736e-04	3.262e-04	3.262e-06
1.000e-01	1.855e+13	6.867e-01	6.867e+00	1.051e-03	9.171e-04	9.171e-06
1.500e-01	2.359e+12	4.157e-01	2.771e+00	6.846e-04	5.976e-04	5.976e-06
2.000e-01	7.332e+11	3.061e-01	1.531e+00	5.403e-04	4.717e-04	4.717e-06
3.000e-01	1.632e+08	2.046e-04	6.821e-04	3.882e-07	3.389e-07	3.389e-09
4.000e-01	7.636e+10	2.037e-01	5.093e-01	3.969e-04	3.465e-04	3.465e-06
5.000e-01	1.760e+11	8.402e-01	1.680e+00	1.649e-03	1.440e-03	1.440e-05
6.000e-01	1.110e+13	8.510e+01	1.418e+02	1.661e-01	1.450e-01	1.450e-03
8.000e-01	5.166e+12	8.389e+01	1.049e+02	1.596e-01	1.393e-01	1.393e-03
1.000e+00	5.946e+12	1.716e+02	1.716e+02	3.164e-01	2.762e-01	2.762e-03
1.500e+00	6.881e+12	5.642e+02	3.761e+02	9.493e-01	8.287e-01	8.287e-03
2.000e+00	1.667e+11	2.812e+01	1.406e+01	4.348e-02	3.796e-02	3.796e-04
Total	**1.045e+14**	**9.356e+02**	**2.507e+03**	**1.639e+00**	**1.431e+00**	**1.431e-02**

file:///C:/Users/mfeldmann/Greye%20Engineering/MicroShield%2012/html/lerf%20basin-5_4_2020-4_36_19%20AM.html 5/4/2020

Quality Assurance Procedure 3.1 Calculation Sheet (01-19)

Sargent & Lundy

CALCULATION SHEET

Project No. S551413.024	**Calculation No.** S54413.024-P-001	**Rev.** 0	**Page No.** 19 of 34
Title: LERF Basin 41 Radiological Dose Rate and Exposure			
Prepared By: MJ Feldmann	**Date:** 5/12/2020	**Checked By:** BD Groth	**Date:** 5/12/2020

B2.0 LERF Basin Cover

Case Summary of LERF Basin 41 Page 1 of 4

MicroShield 12.03
Sargent & Lundy

Date	Preparer	Reviewer

File Name	Run Date	Run Time	Duration
C:\Users\mfeldmann\Desktop\LERF Dose\cover.msd	May 4, 2020	1:02:54 PM	00:00:04

Project Info	
Case Title	LERF Basin 41
Description	Basin Cover, 1 cm, 30 cm and 100 cm
Geometry	13 - Rectangular Volume

Source Dimensions	
Length	605.638 cm (19 ft 10.440 in)
Width	7.951e+03 cm (260 ft 10.320 in)
Height	6.130e+03 cm (201 ft 1.200 in)

Dose Points			
No.	X	Y	Z
#1	607.0 cm (19 ft 10.976 in)	3.066e+03 cm (100 ft 7.200 in)	3.976e+03 cm (130 ft 5.160 in)
#2	636.0 cm (20 ft 10.394 in)	3.066e+03 cm (100 ft 7.200 in)	3.975e+03 cm (130 ft 4.800 in)
#3	706.0 cm (23 ft 1.953 in)	3.066e+03 cm (100 ft 7.200 in)	3.975e+03 cm (130 ft 4.800 in)

Shields			
Shield N	Dimension	Material	Density (g/cm³)
Source	2.95e+10 cm³	Water	1
Air Gap		Air	0.00122

Source Input: Grouping Method - Standard Indices
Number of Groups: 25
Lower Energy Cutoff: 0.015
Photons< 0.015: Incluced
Library: Grove

Nuclide	Ci	Bq	µCi/cm³	Bq/cm³
Am-241	4.1323e-002	1.5289e+009	1.4000e-006	5.1800e-002
Ba-137m	2.7922e+002	1.0331e+013	9.4600e-003	3.5002e+002
C-14	4.7226e+001	1.7474e+012	1.6000e-003	5.9200e+001
Ce-144	5.9033e+002	2.1842e+013	2.0000e-002	7.4000e+002
Cm-244	7.3791e-001	2.7303e+010	2.5000e-005	9.2500e-001
Co-60	7.0839e+001	2.6210e+012	2.4000e-003	8.8800e+001

file:///C:/Users/mfeldmann/Grove%20Engineering/MicroShield%2012.html/cover-5-4-2020-1-02-59%20PM.html 5/4/2020

Quality Assurance Procedure 3.1 Calculation Sheet (01-19)

Sargent & Lundy

CALCULATION SHEET

Project No. S551413.024	**Calculation No.** S54413.024-P-001	**Rev.** 0	**Page No.** 20 of 34
Title: LERF Basin 41 Radiological Dose Rate and Exposure			
Prepared By: MJ Feldmann	**Date:** 5/12/2020	**Checked By:** BD Groth	**Date:** 5/12/2020

Case Summary of LERF Basin 41 Page 2 of 4

Cs-134	1.2102e+001	4.4776e+011	4.1000e-004	1.5170e+001
Cs-137	2.9516e+002	1.0921e+013	1.0000e-002	3.7000e+002
Eu-154	2.8926e+002	1.0703e+013	9.8000e-003	3.6260e+002
Eu-155	1.8595e+003	6.8803e+013	6.3000e-002	2.3310e+003
H-3	7.0839e+003	2.6210e+014	2.4000e-001	8.8800e+003
I-129	5.3129e+001	1.9658e+012	1.8000e-003	6.6600e+001
Nb-94	7.6742e+000	2.8395e+011	2.6000e-004	9.6200e+000
Np-237	6.1984e-002	2.2934e+009	2.1000e-006	7.7700e-002
Pr-144	5.8188e+002	2.1530e+013	1.9714e-002	7.2942e+002
Pu-238	8.2646e-002	3.0579e+009	2.8000e-006	1.0360e-001
Pu-239	5.3129e-001	1.9658e+010	1.8000e-005	6.6600e-001
Pu-241	7.6742e-001	2.8395e+010	2.6000e-005	9.6200e-001
Ra-226	1.8890e+000	6.9895e+010	6.4000e-005	2.3680e+000
Rh-106	1.9186e+001	7.0987e+011	6.5000e-004	2.4050e+001
Ru-106	1.9186e+001	7.0987e+011	6.5000e-004	2.4050e+001
Se-79	4.4274e+000	1.6382e+011	1.5000e-004	5.5500e+000
Sr-90	1.2397e+003	4.5868e+013	4.2000e-002	1.5540e+003
Tc-99	5.3129e+002	1.9658e+013	1.8000e-002	6.6600e+002
U-234	6.1984e-003	2.2934e+008	2.1000e-007	7.7700e-003
Y-90	1.2397e+003	4.5868e+013	4.2000e-002	1.5540e+003

Buildup

Buildup: The material reference is Source.

Integration Parameters

X Direction	10
Y Direction	20
Z Direction	20

Results With Buildup: Dose Point No. 1 - (X = 607, Y = 3066.288, Z = 3.98e+03) cm

Energy (MeV)	Activity (Photons/sec)	Energy Flux (MeV/cm²/sec)	Photon Flux (Photons/cm²/sec)	Exposure Rate (mR/hr)	Absorbed Dose Rate (mrad/hr)	Absorbed Dose Rate (mGy/hr)
1.500e-02	6.948e+12	5.158e-23	3.439e-21	4.424e-24	3.862e-24	3.862e-26
2.000e-02	5.650e+07	1.366e-21	6.830e-20	4.732e-23	4.131e-23	4.131e-25
3.000e-02	2.271e+12	2.645e-06	8.816e-05	2.621e-08	2.288e-08	2.288e-10
4.000e-02	1.690e+13	1.876e-02	4.689e-01	8.296e-05	7.242e-05	7.242e-07
5.000e-02	4.610e+12	1.113e-01	2.225e+00	2.964e-04	2.587e-04	2.587e-06

file:///C:/Users/mfeldmann/Greye%20Engineering/MicroShield%2012/html-cover-5-4-2020-1-02-36%20PM.html 5/4/2020

Quality Assurance Procedure 3.1 Calculation Sheet (01-19)

Sargent & Lundy

CALCULATION SHEET

Project No. S551413.024	Calculation No. S54413.024-P-001	Rev. 0	Page No. 21 of 34
Title: LERF Basin 41 Radiological Dose Rate and Exposure			
Prepared By: MJ Feldmann	Date: 5/12/2020	Checked By: BD Groth	Date: 5/12/2020

Case Summary of LERF Basin 41 Page 3 of 4

6.000e-02	9.218e+11	1.197e-01	1.996e+00	2.379e-04	2.076e-04	2.076e-06
8.000e-02	2.171e+13	1.562e+01	1.952e+02	2.472e-02	2.158e-02	2.158e-04
1.000e-01	1.855e+13	3.145e+01	3.145e+02	4.811e-02	4.200e-02	4.200e-04
1.500e-01	2.359e+12	1.141e+01	7.609e+01	1.879e-02	1.641e-02	1.641e-04
2.000e-01	7.332e+11	6.261e+00	3.131e+01	1.105e-02	9.647e-03	9.647e-05
3.000e-01	1.632e+08	2.882e-03	9.606e-03	5.467e-06	4.772e-06	4.772e-08
4.000e-01	7.636e+10	2.253e+00	5.633e+00	4.390e-03	3.833e-03	3.833e-05
5.000e-01	1.759e+11	7.751e+00	1.550e+01	1.521e-02	1.328e-02	1.328e-04
6.000e-01	1.110e+13	6.783e+02	1.131e+03	1.324e+00	1.156e+00	1.156e-02
8.000e-01	5.166e+12	5.374e+02	6.717e+02	1.022e+00	8.923e-01	8.923e-03
1.000e+00	5.946e+12	9.361e+02	9.361e+02	1.726e+00	1.506e+00	1.506e-02
1.500e+00	6.881e+12	2.332e+03	1.554e+03	3.923e+00	3.425e+00	3.425e-02
2.000e+00	1.666e+11	9.701e+01	4.850e+01	1.500e-01	1.310e-01	1.310e-03
Total	**1.045e+14**	**4.656e+03**	**4.984e+03**	**8.268e+00**	**7.218e+00**	**7.218e-02**

Results With Buildup: Dose Point No. 2 - (X = 636, Y = 3066.288, Z = 3974.592) cm

Energy (MeV)	Activity (Photons/sec)	Energy Flux (MeV/cm²/sec)	Photon Flux (Photons/cm²/sec)	Exposure Rate (mR/hr)	Absorbed Dose Rate (mrad/hr)	Absorbed Dose Rate (mGy/hr)
1.500e-02	6.948e+12	1.576e-09	1.051e-07	1.352e-10	1.180e-10	1.180e-12
2.000e-02	5.650e+07	1.219e-08	6.096e-07	4.223e-10	3.687e-10	3.687e-12
3.000e-02	2.271e+12	9.493e-01	3.164e+01	9.408e-03	8.213e-03	8.213e-05
4.000e-02	1.690e+13	8.184e+01	2.046e+03	3.620e-01	3.160e-01	3.160e-03
5.000e-02	4.610e+12	7.246e+01	1.449e+03	1.930e-01	1.685e-01	1.685e-03
6.000e-02	9.218e+11	2.763e+01	4.605e+02	5.488e-02	4.791e-02	4.791e-04
8.000e-02	2.171e+13	1.205e+03	1.506e+04	1.907e+00	1.664e+00	1.664e-02
1.000e-01	1.855e+13	1.341e+03	1.341e+04	2.051e+00	1.791e+00	1.791e-02
1.500e-01	2.359e+12	2.313e+02	1.542e+03	3.808e-01	3.325e-01	3.325e-03
2.000e-01	7.332e+11	9.092e+01	4.546e+02	1.605e-01	1.401e-01	1.401e-03
3.000e-01	1.632e+08	2.629e-02	8.762e-02	4.986e-05	4.353e-05	4.353e-07
4.000e-01	7.636e+10	1.580e+01	3.950e+01	3.078e-02	2.687e-02	2.687e-04
5.000e-01	1.759e+11	4.486e+01	8.972e+01	8.805e-02	7.687e-02	7.687e-04
6.000e-01	1.110e+13	3.404e+03	5.673e+03	6.644e+00	5.800e+00	5.800e-02
8.000e-01	5.166e+12	2.159e+03	2.698e+03	4.106e+00	3.584e+00	3.584e-02
1.000e+00	5.946e+12	3.227e+03	3.227e+03	5.949e+00	5.193e+00	5.193e-02
1.500e+00	6.881e+12	6.158e+03	4.105e+03	1.036e+01	9.045e+00	9.045e-02
2.000e+00	1.666e+11	2.175e+02	1.088e+02	3.364e-01	2.937e-01	2.937e-03
Total	**1.045e+14**	**1.828e+04**	**5.538e+04**	**3.263e+01**	**2.849e+01**	**2.849e-01**

file:///C:/Users/mfeldmann/Greye%20Engineering/MicroShield%2012/html-cover-5-4-2020-1-02-36%20PM.html 5/4/2020

Quality Assurance Procedure 3.1 Calculation Sheet (01-19)

Sargent & Lundy

CALCULATION SHEET

Project No. S551413.024	Calculation No. S54413.024-P-001	Rev. 0	Page No. 22 of 34
Title: LERF Basin 41 Radiological Dose Rate and Exposure			
Prepared By: MJ Feldmann	Date: 5/12/2020	Checked By: BD Groth	Date: 5/12/2020

Case Summary of LERF Basin 41 Page 6 of 4

Results With Buildup: Dose Point No. 3 - (X = 706, Y = 3066.288, Z = 3974.592) cm

Energy (MeV)	Activity (Photons/sec)	Energy Flux (MeV/cm²/sec)	Photon Flux (Photons/cm²/sec)	Exposure Rate (mR/hr)	Absorbed Dose Rate (mrad/hr)	Absorbed Dose Rate (mGy/hr)
1.500e-02	6.948e+12	1.202e-05	8.015e-04	1.031e-06	9.002e-07	9.002e-09
2.000e-02	5.650e+07	4.397e-07	2.199e-05	1.523e-08	1.330e-08	1.330e-10
3.000e-02	2.271e+12	2.327e+00	7.756e+01	2.306e-02	2.013e-02	2.013e-04
4.000e-02	1.690e+13	1.048e+02	2.620e+03	4.635e-01	4.046e-01	4.046e-03
5.000e-02	4.610e+12	7.435e+01	1.487e+03	1.981e-01	1.729e-01	1.729e-03
6.000e-02	9.218e+11	2.599e+01	4.331e+02	5.162e-02	4.506e-02	4.506e-04
8.000e-02	2.171e+13	1.075e+03	1.343e+04	1.701e+00	1.485e+00	1.485e-02
1.000e-01	1.855e+13	1.189e+03	1.189e+04	1.819e+00	1.588e+00	1.588e-02
1.500e-01	2.359e+12	2.107e+02	1.404e+03	3.469e-01	3.029e-01	3.029e-03
2.000e-01	7.332e+11	8.151e+01	4.076e+02	1.439e-01	1.256e-01	1.256e-03
3.000e-01	1.632e+08	2.400e-02	7.999e-02	4.552e-05	3.974e-05	3.974e-07
4.000e-01	7.636e+10	1.445e+01	3.612e+01	2.815e-02	2.458e-02	2.458e-04
5.000e-01	1.759e+11	4.104e+01	8.208e+01	8.056e-02	7.033e-02	7.033e-04
6.000e-01	1.110e+13	3.114e+03	5.191e+03	6.079e+00	5.307e+00	5.307e-02
8.000e-01	5.166e+12	1.972e+03	2.465e+03	3.751e+00	3.274e+00	3.274e-02
1.000e+00	5.946e+12	2.941e+03	2.941e+03	5.422e+00	4.733e+00	4.733e-02
1.500e+00	6.881e+12	5.603e+03	3.735e+03	9.427e+00	8.230e+00	8.230e-02
2.000e+00	1.666e+11	1.978e+02	9.891e+01	3.059e-01	2.671e-01	2.671e-03
Total	**1.045e+14**	**1.665e+04**	**1.017e+05**	**2.984e+01**	**2.605e+01**	**2.605e-01**

file:///C:/Users/mfeldmann/Greye%20Engineering/MicroShield%2012/html/cover-5-4-2020-1-02-56%20PM.html 5/4/2020

Quality Assurance Procedure 3.1 Calculation Sheet (01-19)

Sargent & Lundy

CALCULATION SHEET

Project No. S551413.024	Calculation No. S54413.024-P-001	Rev. 0	Page No. 23 of 34
Title: LERF Basin 41 Radiological Dose Rate and Exposure			
Prepared By: MJ Feldmann	Date: 5/12/2020	Checked By: BD Groth	Date: 5/12/2020

B3.0 FRP Section

Case Summary of Basin 41 Page 1 of 4

MicroShield 12.03
Sargent & Lundy

Date	Preparer	Reviewer

File Name	Run Date	Run Time	Duration
Case2	May 4, 2020	12:00:10 PM	00:00:02

Project Info	
Case Title	Basin 41
Description	FRP Pipe - 30 ft section
Geometry	7 - Cylinder Volume - Side Shields

Source Dimensions	
Height	914.4 cm (30 ft)
Radius	10.16 cm (4.000 in)

Dose Points			
No.	X	Y	Z
#1	12.4 cm (4.882 in)	457.2 cm (15 ft)	0.0 cm (0 in)
#2	41.4 cm (1 ft 4.299 in)	0.0 cm (0 in)	0.0 cm (0 in)
#3	111.4 cm (3 ft 7.858 in)	0.0 cm (0 in)	0.0 cm (0 in)

Shields			
Shield N	Dimension	Material	Density (g/cm³)
Source	2.97e+05 cm³	Water	1
Transition		Air	0.00122
Air Gap		Air	0.00122
Wall Clad	1.219 cm	Carbon	1.85

Source Input: Grouping Method - Standard Indices
Number of Groups: 25
Lower Energy Cutoff: 0.015
Photons< 0.015: Incluced
Library: Grove

Nuclide	Ci	Bq	µCi/cm³	Bq/cm³
Am-241	4.1515e-007	1.5360e+004	1.4000e-006	5.1800e-002
Ba-137m	2.8052e-003	1.0379e+008	9.4600e-003	3.5002e+002
C-14	4.7445e-004	1.7555e+007	1.6000e-003	5.9200e+001
Ce-144	5.9337e-003	2.1943e+008	2.0000e-002	7.4000e+002
Cm-244	7.4133e-006	2.7429e+005	2.5000e-005	9.2500e-001
Co-60	7.1158e-004	2.6332e+007	2.4000e-003	8.8800e+001
Cs-134	1.2158e-004	4.4984e+006	4.1000e-004	1.5170e+001

file:///C:/Users/mfeldmann/Grove%20Engineering/MicroShield%2012.htm/Case2-5_4_2020-12_00_13%20PM.html 5/4/2020

Quality Assurance Procedure 3.1 Calculation Sheet (01-19)

Sargent & Lundy

CALCULATION SHEET

Project No. S551413.024	Calculation No. S54413.024-P-001	Rev. 0	Page No. 24 of 34
Title: LERF Basin 41 Radiological Dose Rate and Exposure			
Prepared By: MJ Feldmann	Date: 5/12/2020	Checked By: BD Groth	Date: 5/12/2020

Case Summary of Basin 41 Page 2 of 4

Cs-137	2.9653e-003	1.0972e+008	1.0000e-002	3.7000e+002
Eu-154	2.9060e-003	1.0752e+008	9.8000e-003	3.6260e+002
Eu-155	1.8682e-002	6.9122e+008	6.3000e-002	2.3310e+003
H-3	7.1168e-002	2.6332e+009	2.4000e-001	8.8800e+003
I-129	5.3376e-004	1.9749e+007	1.8000e-003	6.6600e+001
Nb-94	7.7099e-005	2.8527e+006	2.6000e-004	9.6200e+000
Np-237	6.2272e-007	2.3041e+004	2.1000e-006	7.7700e-002
Pr-144	5.8459e-003	2.1630e+008	1.9714e-002	7.2942e+002
Pu-238	8.3029e-007	3.0721e+004	2.8000e-006	1.0360e-001
Pu-239	5.3376e-006	1.9749e+005	1.8000e-005	6.6600e-001
Pu-241	7.7099e-006	2.8527e+005	2.6000e-005	9.6200e-001
Ra-226	1.8978e-005	7.0219e+005	6.4000e-005	2.3680e+000
Rh-106	1.9275e-004	7.1316e+006	6.5000e-004	2.4050e+001
Ru-106	1.9275e-004	7.1316e+006	6.5000e-004	2.4050e+001
Se-79	4.4480e-005	1.6458e+006	1.5000e-004	5.5500e+000
Sr-90	1.2454e-002	4.6081e+008	4.2000e-002	1.5540e+003
Tc-99	5.3376e-003	1.9749e+008	1.8000e-002	6.6600e+002
U-234	6.2272e-008	2.3041e+003	2.1000e-007	7.7700e-003
Y-90	1.2454e-002	4.6081e+008	4.2000e-002	1.5540e+003

Buildup

Buildup: The material reference is Source.

Integration Parameters

Radial	10
Circumferential	10
Y Direction (axial)	20

Results With Buildup: Dose Point No. 1 - (X = 12.4, Y = 457.2, Z = 0) cm

Energy (MeV)	Activity (Photons/sec)	Energy Flux (MeV/cm²/sec)	Photon Flux (Photons/cm²/sec)	Exposure Rate (mR/hr)	Absorbed Dose Rate (mrad/hr)	Absorbed Dose Rate (mGy/hr)
1.500e-02	6.980e+07	4.961e-03	3.308e-01	4.256e-04	3.715e-04	3.715e-06
2.000e-02	5.676e+02	2.102e-06	1.051e-04	7.280e-08	6.355e-08	6.355e-10
3.000e-02	2.282e+07	1.994e+00	6.647e+01	1.976e-02	1.725e-02	1.725e-04
4.000e-02	1.697e+08	6.391e+01	1.598e+03	2.826e-01	2.467e-01	2.467e-03
5.000e-02	4.631e+07	3.937e+01	7.875e+02	1.049e-01	9.157e-02	9.157e-04
6.000e-02	9.261e+06	1.266e+01	2.109e+02	2.514e-02	2.194e-02	2.194e-04

file:///C:/Users/mfeldmann/Greye%20Engineering/MicroShield%2012/html/Case2-5_4_2020-12_00_13%20PM.html 5/4/2020

Quality Assurance Procedure 3.1 Calculation Sheet (01-19)

Sargent & Lundy

CALCULATION SHEET

Project No. S551413.024	Calculation No. S54413.024-P-001	Rev. 0	Page No. 25 of 34
Title: LERF Basin 41 Radiological Dose Rate and Exposure			
Prepared By: MJ Feldmann	Date: 5/12/2020	Checked By: BD Groth	Date: 5/12/2020

Case Summary of Basin 41 Page 3 of 4

8.000e-02	2.181e+08	4.751e+02	5.938e+03	7.518e-01	6.563e-01	6.563e-03
1.000e-01	1.864e+08	4.966e+02	4.966e+03	7.597e-01	6.632e-01	6.632e-03
1.500e-01	2.370e+07	8.265e+01	5.510e+02	1.361e-01	1.188e-01	1.188e-03
2.000e-01	7.366e+06	3.095e+01	1.548e+02	5.463e-02	4.769e-02	4.769e-04
3.000e-01	1.639e+03	8.697e-03	2.899e-02	1.650e-05	1.440e-05	1.440e-07
4.000e-01	7.671e+05	5.083e+00	1.271e+01	9.904e-03	8.646e-03	8.646e-05
5.000e-01	1.768e+06	1.406e+01	2.811e+01	2.759e-02	2.409e-02	2.409e-04
6.000e-01	1.115e+08	1.042e+03	1.737e+03	2.034e+00	1.776e+00	1.776e-02
8.000e-01	5.190e+07	6.329e+02	7.912e+02	1.204e+00	1.051e+00	1.051e-02
1.000e+00	5.973e+07	9.111e+02	9.111e+02	1.679e+00	1.466e+00	1.466e-02
1.500e+00	6.913e+07	1.600e+03	1.066e+03	2.691e+00	2.349e+00	2.349e-02
2.000e+00	1.674e+06	5.280e+01	2.640e+01	8.165e-02	7.128e-02	7.128e-04
Total	**1.050e+09**	**5.461e+03**	**1.885e+04**	**9.863e+00**	**8.610e+00**	**8.610e-02**

Results With Buildup: Dose Point No. 2 - (X = 41.4, Y = 0, Z = 0) cm

Energy (MeV)	Activity (Photons/sec)	Energy Flux (MeV/cm²/sec)	Photon Flux (Photons/cm²/sec)	Exposure Rate (mR/hr)	Absorbed Dose Rate (mrad/hr)	Absorbed Dose Rate (mGy/hr)
1.500e-02	6.980e+07	9.035e-03	6.023e-01	7.749e-04	6.765e-04	6.765e-06
2.000e-02	5.676e+02	7.816e-07	3.908e-05	2.707e-08	2.364e-08	2.364e-10
3.000e-02	2.282e+07	3.245e-01	1.082e+01	3.216e-03	2.808e-03	2.808e-05
4.000e-02	1.697e+08	8.627e+00	2.157e+02	3.816e-02	3.331e-02	3.331e-04
5.000e-02	4.631e+07	5.083e+00	1.017e+02	1.354e-02	1.182e-02	1.182e-04
6.000e-02	9.261e+05	1.619e+00	2.698e+01	3.215e-03	2.807e-03	2.807e-05
8.000e-02	2.181e+08	6.111e+01	7.639e+02	9.670e-02	8.442e-02	8.442e-04
1.000e-01	1.864e+08	6.447e+01	6.447e+02	9.863e-02	8.610e-02	8.610e-04
1.500e-01	2.370e+07	1.080e+01	7.200e+01	1.778e-02	1.553e-02	1.553e-04
2.000e-01	7.366e+06	4.079e+00	2.040e+01	7.200e-03	6.285e-03	6.285e-05
3.000e-01	1.639e+03	1.157e-03	3.857e-03	2.195e-06	1.916e-06	1.916e-08
4.000e-01	7.671e+05	6.782e-01	1.695e+00	1.321e-03	1.154e-03	1.154e-05
5.000e-01	1.768e+06	1.880e+00	3.760e+00	3.691e-03	3.222e-03	3.222e-05
6.000e-01	1.115e+08	1.395e+02	2.326e+02	2.724e-01	2.378e-01	2.378e-03
8.000e-01	5.190e+07	8.489e+01	1.061e+02	1.615e-01	1.410e-01	1.410e-03
1.000e+00	5.973e+07	1.223e+02	1.223e+02	2.254e-01	1.968e-01	1.968e-03
1.500e+00	6.913e+07	2.149e+02	1.433e+02	3.615e-01	3.156e-01	3.156e-03
2.000e+00	1.674e+06	7.095e+00	3.547e+00	1.097e-02	9.578e-03	9.578e-05
Total	**1.050e+09**	**7.274e+02**	**2.131e+04**	**1.316e+00**	**1.149e+00**	**1.149e-02**

file:///C:/Users/mfeldmann/Greye%20Engineering/MicroShield%2012/html/Case2-5_4_2020-12_00_13%20PM.html 5/4/2020

Quality Assurance Procedure 3.1 Calculation Sheet (01-19)

Sargent & Lundy

CALCULATION SHEET

Project No. S551413.024	**Calculation No.** S54413.024-P-001	**Rev.** 0	**Page No.** 26 of 34
Title: LERF Basin 41 Radiological Dose Rate and Exposure			
Prepared By: MJ Feldmann	**Date:** 5/12/2020	**Checked By:** BD Groth	**Date:** 5/12/2020

Case Summary of Basin 41 Page 6 of 4

Results With Buildup: Dose Point No. 3 - (X = 111.4, Y = 0, Z = 0) cm

Energy (MeV)	Activity (Photons/sec)	Energy Flux (MeV/cm²/sec)	Photon Flux (Photons/cm²/sec)	Exposure Rate (mR/hr)	Absorbed Dose Rate (mrad/hr)	Absorbed Dose Rate (mGy/hr)
1.500e-02	6.980e+07	2.906e-03	1.937e-01	2.493e-04	2.176e-04	2.176e-06
2.000e-02	5.676e+02	2.718e-07	1.359e-05	9.416e-09	8.220e-09	8.220e-11
3.000e-02	2.282e+07	1.167e-01	3.889e+00	1.156e-03	1.009e-03	1.009e-05
4.000e-02	1.697e+08	3.137e+00	7.843e+01	1.388e-02	1.211e-02	1.211e-04
5.000e-02	4.631e+07	1.857e+00	3.714e+01	4.947e-03	4.319e-03	4.319e-05
6.000e-02	9.261e+06	5.928e-01	9.880e+00	1.177e-03	1.028e-03	1.028e-05
8.000e-02	2.181e+08	2.242e+01	2.803e+02	3.548e-02	3.098e-02	3.098e-04
1.000e-01	1.864e+08	2.367e+01	2.367e+02	3.622e-02	3.162e-02	3.162e-04
1.500e-01	2.370e+07	3.966e+00	2.644e+01	6.532e-03	5.702e-03	5.702e-05
2.000e-01	7.366e+06	1.498e+00	7.492e+00	2.644e-03	2.309e-03	2.309e-05
3.000e-01	1.639e+03	4.248e-04	1.416e-03	8.058e-07	7.035e-07	7.035e-09
4.000e-01	7.671e+05	2.489e-01	6.222e-01	4.849e-04	4.233e-04	4.233e-06
5.000e-01	1.768e+06	6.898e-01	1.380e+00	1.354e-03	1.182e-03	1.182e-05
6.000e-01	1.115e+08	5.118e+01	8.530e+01	9.990e-02	8.721e-02	8.721e-04
8.000e-01	5.190e+07	3.112e+01	3.890e+01	5.920e-02	5.168e-02	5.168e-04
1.000e+00	5.973e+07	4.482e+01	4.482e+01	8.261e-02	7.212e-02	7.212e-04
1.500e+00	6.913e+07	7.871e+01	5.247e+01	1.324e-01	1.156e-01	1.156e-03
2.000e+00	1.674e+06	2.597e+00	1.299e+00	4.016e-03	3.506e-03	3.506e-05
Total	**1.050e+09**	**2.666e+02**	**2.222e+04**	**4.823e-01**	**4.210e-01**	**4.210e-03**

file:///C:/Users/mfeldmann/Greye%20Engineering/MicroShield%2012/html/Case2-5_4_2020-12_00_13%20PM.html 5/4/2020

Quality Assurance Procedure 3.1 Calculation Sheet (01-19)

Sargent & Lundy	CALCULATION SHEET		
Project No. S551413.024	**Calculation No.** S54413.024-P-001	**Rev.** 0	**Page No.** 27 of 34
Title: LERF Basin 41 Radiological Dose Rate and Exposure			
Prepared By: MJ Feldmann	**Date:** 5/12/2020	**Checked By:** BD Groth	**Date:** 5/12/2020

APPENDIX C

LERF BASIN 41 SKETCHES

Quality Assurance Procedure 3.1 Calculation Sheet (01-19)

Sargent & Lundy

CALCULATION SHEET

Project No. S551413.024	**Calculation No.** S54413.024-P-001	**Rev.** 0	**Page No.** 28 of 34
Title: LERF Basin 41 Radiological Dose Rate and Exposure			
Prepared By: MJ Feldmann	**Date:** 5/12/2020	**Checked By:** BD Groth	**Date:** 5/12/2020

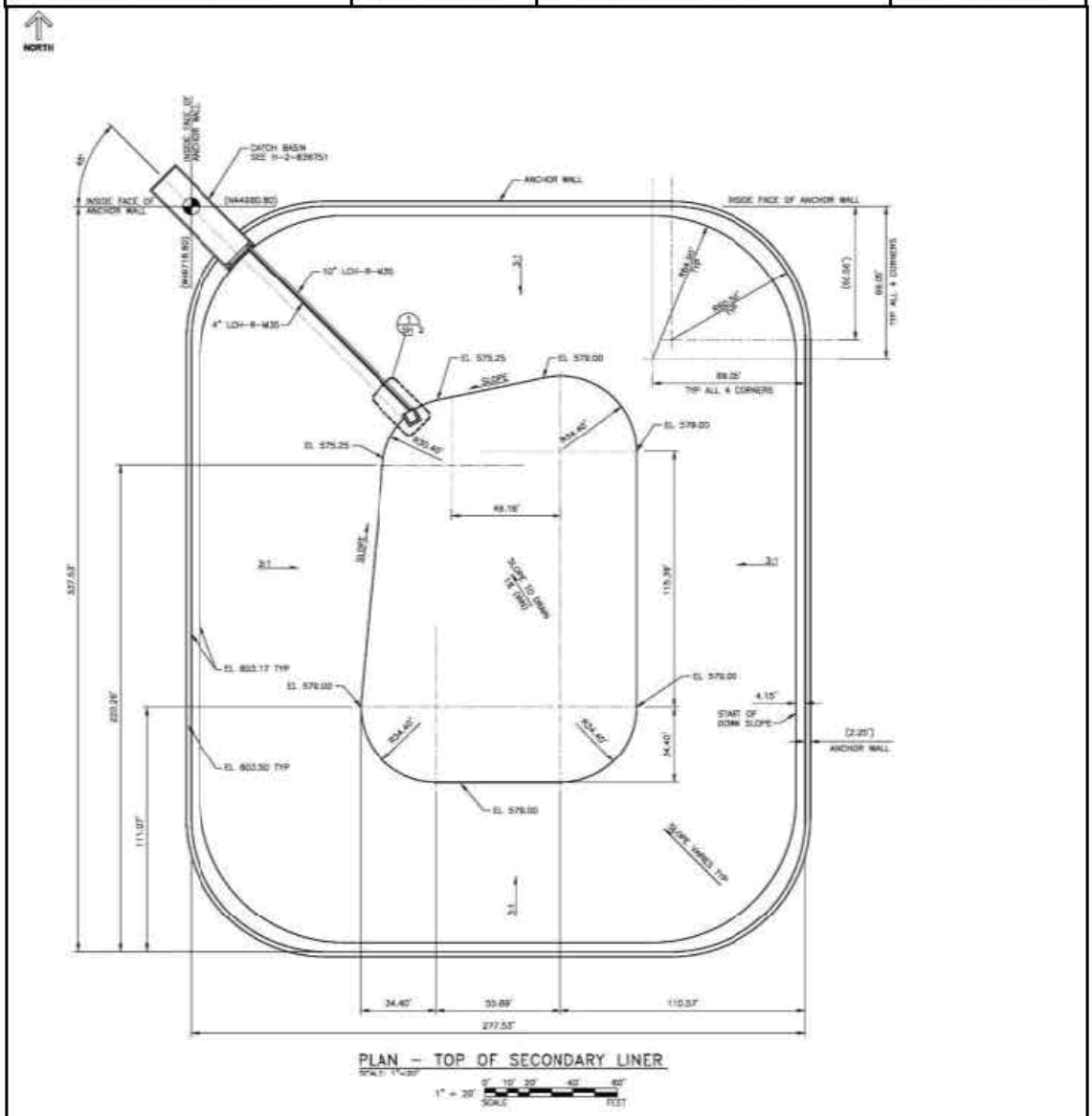

Quality Assurance Procedure 3.1 Calculation Sheet (01-19)

Sargent & Lundy	CALCULATION SHEET		
Project No. S551413.024	**Calculation No.** S54413.024-P-001	**Rev.** 0	**Page No.** 29 of 34
Title: LERF Basin 41 Radiological Dose Rate and Exposure			
Prepared By: MJ Feldmann	**Date:** 5/12/2020	**Checked By:** BD Groth	**Date:** 5/12/2020

APPENDIX D

FRP DATA SHEET

Quality Assurance Procedure 3.1 Calculation Sheet (01-19)

Sargent & Lundy

CALCULATION SHEET

Project No. S551413.024	**Calculation No.** S54413.024-P-001	**Rev.** 0	**Page No.** 30 of 34
Title: LERF Basin 41 Radiological Dose Rate and Exposure			
Prepared By: MJ Feldmann	**Date:** 5/12/2020	**Checked By:** BD Groth	**Date:** 5/12/2020

Conley Composites
an ANDRONACO INDUSTRIES company

EPOXY SCHEDULE 40/30
DOUBLE CONTAINED PIPING

ASTM DESIGNATION CODE RTRP-11FW1-2113

Conley Product Data

RUGGED TOP OF THE LINE PERFORMANCE ~ AFFORDABLE COST

Description

- Extra heavy duty filament wound piping for service up to 150 psi
- 60 mil double Nexus® reinforced corrosion barrier (inner liner)
- Premium aromatic amine cured product for operating temperatures up to 275°F
- Sizes available from 2" through 30"
- Complete line of filament wound fittings available
- In house fabrication facilities "From your blueprints to pipe assemblies"
- Color coding available
- Patented interlocking union for thermal expansion (US Patent #5449204 & 5368338)
- See Sch 40/30 Specification
- See Sch 40 Product Data
- See Sch 30 Product Data

Typical Applications

- Waste water treatment
- Steel pickling
- Automotive
- Petrochemical
- Pharmaceutical
- Chemical processing
- Brine and brackish water
- Jet fuel
- Gasoline – Diesel – Fuel Oil
- Cooling water
- Odor control
- Industrial waste
- Food and beverages
- Bridge, roof and floor drains

Performance

- Excellent chemical resistance inside and outside to a variety of caustics, acids, brines and petroleum products – See the chemical resistance chart for fluid services
- External UV/Corrosion barrier minimum 10/20 mil on all pipe and fittings
- 25 year guarantee against *fiber blooming* on all pipe and fittings
- Straight socket joining system (No expensive tapering tools required)

Specifications

- ASTM D2996 Filament-Wound "Fiberglass" Pipe
- ASTM D2310 Classification for Machine-Made "Fiberglass" Pipe
- ASTM D3567 Determining Dimensions of "Fiberglass" Pipe and Fittings
- ASTM D4024 Machine Made "Fiberglass" Flanges
- ASTM D5685 "Fiberglass" Pressure Pipe Fittings

Codes & Standards

- AWWA C950 Fiberglass Pressure Pipe Standards
- ASME B31.1 Power Piping Code
- ASME B31.3 Process Piping Code

Listings

- U.S. Federal Regulations FDA 21 CFR 175.300

Application Legislation

- 40 CFR 280, RCRA, Subtitle 1
- 40 CFR 264/5
- CERCLA "Superfund Act"

PDS-030K (12/14) 1

Sargent & Lundy

CALCULATION SHEET

Project No. S551413.024	**Calculation No.** S54413.024-P-001	**Rev.** 0	**Page No.** 31 of 34
Title: LERF Basin 41 Radiological Dose Rate and Exposure			
Prepared By: MJ Feldmann	**Date:** 5/12/2020	**Checked By:** BD Groth	**Date:** 5/12/2020

Schedule 40/30
Pipe Dimensional Data* and Pressure Ratings[1] from –50° to 275°F

[1]Static pressure rating; steady (stationary) pressure is created when using a gear pump, turbine pump, centrifugal pump, etc.
[2]Vacuum Service: A full vacuum within the pipe is equivalent to 14.7 psi external pressure at sea level. Contact Conley for higher external pressure ratings.

NOM SIZE	ANNULUS CLEAR (IN)	SPIDER MIN OPENING (IN)	ANNULUS VOLUME (GAL/FT)	COMBINED WEIGHT (LB/FT)	ANNULUS PRESS (PSI)	ANNULUS VAC PRESS (PSI)[2]
2"/4"	0.81	0.6	0.51	3.14	150	24.1
2"/6"	1.81	1.6	1.32	4.32	150	13.8
3"/6"	1.27	1.0	1.10	4.89	150	13.8
3"/8"	2.27	2.0	2.24	5.85	150	6.1
4"/6"	0.76	0.5	0.82	5.54	150	13.8
4"/8"	1.76	1.5	1.96	6.50	150	6.1
6"/8"	0.72	0.5	1.14	8.45	150	6.1
6"/10"	1.72	1.5	2.61	10.86	150	10.2
8"/10"	0.70	0.5	1.47	12.63	150	10.2
8"/12"	1.83	1.6	3.51	14.02	100	5.7
10"/12"	0.79	0.5	2.04	16.61	100	5.7
10"/14"	1.79	1.5	4.20	18.60	100	3.6
12"/14"	0.63	0.4	2.16	21.67	100	3.6
12"/16"	1.63	1.4	4.65	23.01	100	2.5
14"/16"	0.63	0.4	2.49	24.91	100	2.5
14"/18"	1.63	1.4	5.30	27.91	100	4.2
16"/18"	0.63	0.4	2.82	29.80	100	4.2
16"/20"	1.63	1.4	5.96	31.32	100	3.1
18"/20"	0.63	0.4	3.14	33.21	100	3.1
18"/24"	2.63	2.0	10.40	39.70	100	3.5
20"/24"	1.65	1.4	7.75	40.54	100	3.5
20"/30"	4.77	2.0	21.22	50.49	100	3.1
24"/30"	2.70	2.0	13.96	58.82	100	3.1

*All values are nominal. Minimum wall thickness shall not be less than 87.5% of nominal wall thickness in accordance with ASTM D2996.
NOTES:
For carrier pipe dimensions, see Schedule 40 Pipe Dimensional Data Table
For containment pipe dimensions, see Schedule 30 Pipe Dimensional Data Table

ASTM ASME FDA

2 PDM 0306 (12-14)

Quality Assurance Procedure 3.1 Calculation Sheet (01-19)

Sargent & Lundy

CALCULATION SHEET

Project No. S551413.024	**Calculation No.** S54413.024-P-001	**Rev.** 0	**Page No.** 32 of 34
Title: LERF Basin 41 Radiological Dose Rate and Exposure			
Prepared By: MJ Feldmann	**Date:** 5/12/2020	**Checked By:** BD Groth	**Date:** 5/12/2020

Support Spans (FT)

NOM SIZE	CARRIER PIPE TEMPERATURE							
	75	100	125	150	175	200	225	250
2"/4"	15.3	15.3	15.3	15.3	15.2	15.2	15.1	15.1
2"/6"	19.6	19.6	19.6	19.6	19.5	19.5	19.5	19.5
3"/6"	18.3	18.3	18.3	18.3	18.3	18.2	18.2	18.1
3"/8"	21.5	21.5	21.5	21.5	21.4	21.4	21.4	21.4
4"/6"	17.9	17.9	17.9	17.9	17.8	17.7	17.5	17.5
4"/8"	20.5	20.5	20.5	20.5	20.5	20.4	20.3	20.3
6"/8"	19.9	19.9	19.9	19.9	19.8	19.6	19.3	19.3
6"/10"	23.1	23.1	23.1	23.1	23.1	22.9	22.6	22.8
6"/10"	22.5	22.5	22.5	22.5	22.4	22.1	21.9	21.8
8"/12"	24.5	24.5	24.5	24.5	24.4	24.3	24.1	24.1
10"/12"	23.8	23.8	23.8	23.8	23.7	23.4	23.2	23.1
10"/14"	25.3	25.3	25.3	25.3	25.2	25.0	24.8	24.7
12"/14"	25.4	25.4	25.4	25.4	25.2	24.9	24.6	24.5
12"/16"	26.6	26.6	26.6	26.6	26.5	26.2	25.9	25.9
14"/16"	26.4	26.4	26.4	26.4	26.3	25.9	25.6	25.5
14"/18"	28.6	28.6	28.6	28.6	28.5	28.2	28.0	27.9
16"/18"	28.3	28.3	28.3	28.3	28.1	27.8	27.5	27.4
16"/20"	29.4	29.4	29.4	29.4	29.3	29.0	28.7	28.7
18"/20"	29.1	29.1	29.1	29.1	29.0	28.6	28.3	28.2
18"/24"	32.4	32.4	32.4	32.4	32.3	32.0	31.8	31.7
20"/24"	31.9	31.9	31.9	31.9	31.7	31.5	31.2	31.1
20"/30"	36.8	36.8	36.8	36.8	36.7	36.5	36.4	36.3
24"/30"	35.7	35.7	35.7	35.7	35.6	35.3	35.0	34.9

NOTE: These spans are valid for the containment pipe operating at ambient temperatures.

Span multipliers for fluids of different specific gravities

FLUID SPECIFIC GRAVITY							
AIR	0.75	0.9	1.0	1.1	1.25	1.5	2.0
1.40	1.07	1.02	1.0	0.96	0.95	0.90	0.84
(MULTIPLIER FOR CORRECTED SPAN LENGTHS)							

Span multipliers for fluids at different temperatures

FLUID TEMPERATURE						
75°F	100°F	150°F	200°F	225°F	250°F	275°F
1.0	0.98	0.93	0.88	0.84	0.80	0.75
(MULTIPLIER FOR CORRECTED SPAN LENGTHS)						

PDS-0306 (12-14) 3

Quality Assurance Procedure 3.1 Calculation Sheet (01-19)

Sargent & Lundy Engineering Services, Inc.

CALCULATION SHEET

Project No. S551413.024	**Calculation No.** S54413.024-P-001	**Rev.** 0	**Page No.** 33 of 34
Title: LERF Basin 41 Radiological Dose Rate and Exposure			
Prepared By: MJ Feldmann	**Date:** 5/12/2020	**Checked By:** BD Groth	**Date:** 5/12/2020

Anchor Loads Due to Restrained Thermal Expansion (LBS)

NOM SIZE	TEMPERATURE CHANGE IN CONTAINMENT PIPE			
	1°F	25°F	50°F	75°F
2"/4"	519	1,535	2,592	3,650
2"/6"	547	2,232	3,987	5,742
3"/6"	751	2,438	4,191	5,946
3"/8"	774	3,003	5,325	7,647
4"/6"	981	2,666	4,421	6,176
4"/8"	1,004	3,233	5,555	7,877
6"/8"	1,697	3,926	6,248	8,570
6"/10"	1,754	5,349	9,095	12,841
8"/10"	2,379	5,975	9,721	13,466
8"/12"	2,412	6,798	11,386	15,934
10"/12"	3,330	7,716	12,264	16,652
10"/14"	3,377	8,888	14,628	20,367
12"/14"	4,469	9,979	15,719	21,459
12"/16"	4,500	10,770	17,301	23,831
14"/16"	5,172	11,441	17,972	24,503
14"/18"	5,243	13,215	21,519	29,824
16"/18"	5,914	13,886	22,191	30,495
16"/20"	5,950	14,782	23,981	33,181
18"/20"	6,621	15,453	24,653	33,853
18"/24"	6,775	19,286	32,323	45,357
20"/24"	7,071	19,584	32,619	45,653
20"/30"	7,306	25,461	44,372	63,284
24"/30"	10,258	28,413	47,325	66,236

NOTE: Thermal end loads on anchors are independent of the carrier pipe temperature. The loads are based on the change in temperature of the containment pipe plus 10% or the maximum load from the carrier pipe at 150°F with uninsulated containment pipe.

4 PDS 10306 (12-14)

Quality Assurance Procedure 3.1 Calculation Sheet (01-19)

Sargent & Lundy Engineers Services, Inc.

CALCULATION SHEET

Project No. S551413.024	**Calculation No.** S54413.024-P-001	**Rev.** 0	**Page No.** 34 of 34
Title: LERF Basin 41 Radiological Dose Rate and Exposure			
Prepared By: MJ Feldmann	**Date:** 5/12/2020	**Checked By:** BD Groth	**Date:** 5/12/2020

Typical Properties

TEMPERATURE	75°F	250°F	
PROPERTY	VALUE	VALUE	METHOD
AXIAL TENSILE STRENGTH	14,200 psi	10,650 psi	ASTM D2105
AXIAL TENSILE DESIGN STRENGTH	3,550 psi	2,660 psi	ASTM D2105
AXIAL MODULUS OF ELASTICITY	1.75×10^6 psi	1.30×10^6 psi	ASTM D2105
COMPRESSIVE STRENGTH	22,750 psi	17,000 psi	ASTM D695
COMPRESSIVE DESIGN STRENGTH	5,685 psi	4,250 psi	ASTM D695
COMPRESSION MODULUS	2.80×10^6 psi	2.10×10^6 psi	ASTM D695
POISSON'S RATIO V_{ph} (V_{hp})	0.33 (0.23)		*CONLEY METHOD #20
BEAM BENDING, ULTIMATE STRESS	30,000 psi	22,500 psi	CONLEY METHOD 8
BEAM BENDING, DESIGN STRESS[1]	3,750 psi	2,810 psi	CONLEY METHOD 8
SHEAR MODULUS	1.30×10^6 psi	1.00×10^6 psi	*CONLEY METHOD #9
HYDROSTATIC DESIGN BASIS	16,000 psi	8,000 psi	ASTM D2992 PROCEDURE B
HYDROSTATIC BURST (WALL STRESS @ 72°F)	32,000 psi	24,000 psi	ASTM D1599
CIRCUMFERENTIAL MODULUS OF ELASTICITY	2.50×10^6 psi	1.87×10^6 psi	ASTM D1599
FLEXURAL MODULUS OF ELASTICITY	1.75×10^6 psi	1.30×10^6 psi	ASTM 2790
COEFFICIENT OF LINEAR THERMAL EXPANSION	9.5×10^{-6} IN / IN-°F		CONLEY METHOD 3
COEFFICIENT OF THERMAL CONDUCTIVITY	2.9 BTU/HR-IN / FT²-°F		CONLEY METHOD 16
SPECIFIC GRAVITY	1.85		
DENSITY	0.067 LB/CU IN		
DIELECTRIC STRENGTH	535 VOLTS / MIL		ASTM D149
DEGREE OF CURE	175°C (347°F) Tg		DMA
HEAT DEFLECTION TEMPERATURE	150°C (302°F)		ISO 75-3
FLOW FACTOR (HAZEN-WILLIAMS)	150		
SURFACE ROUGHNESS	1.7×10^{-5} FEET		
MANNING'S "n"	0.009 INCH		

[1] Beam bending design stress is 1/8 of ultimate to allow for combined stress (bending and pressure)

PDS10/30L (12/14) 5

Quality Assurance Procedure 3.1 Calculation Sheet (01-19)

Sargent & Lundy Engineering Services, Inc.

CALCULATION SHEET

Project No. S551413.024	**Calculation No.** S54413.024-P-001	**Rev.** 0	**Page No.** 35 of 34
Title: LERF Basin 41 Radiological Dose Rate and Exposure			
Prepared By: MJ Feldmann	**Date:** 5/12/2020	**Checked By:** BD Groth	**Date:** 5/12/2020

ISO 9001:2008
CERTIFIED
Conley
Composites
Kentwood, MI

This product data sheet and recommendations it contains are based on data reasonably believed to be reliable. It is intended that this data be used by competent personnel having acceptable training in accordance with current industry practice and operating conditions. Variation in environment, application or installation, changes in operating procedures, or extrapolation of data may cause unsatisfactory results. Conley Composites makes no representation or warranty, express or implied, including warranties of merchantability or fitness for purpose, as to accuracy, adequacy or completeness of the recommendations or information contained herein. Conley Composites assumes no liability whatsoever in connection with this literature or the information or recommendations it contains.

Conley Composites

4544 Broadmoor Ave. SE,
Kentwood, MI 49512 USA
Phone: 616.512.8000
Fax: 616.512.8001
www.conleyfrp.com
E-Mail: sales@conleyfrp.com

6 PDS4030E (12/14)

Quality Assurance Procedure 3.1 Calculation Sheet (01-19)